2006 Mazda6 MAZDASPEED6 Workshop Manual

FOREWORD

This manual contains on-vehicle service and/or diagnosis procedures for the Mazda6, MAZDASPEED6.

For proper repair and maintenance, a thorough familiarization with this manual is important, and it should always be kept in a handy place for quick and easy reference.

All the contents of this manual, including drawings and specifications, are the latest available at the time of printing. As modifications affecting repair or maintenance occur, relevant information supplementary to this volume will be made available at Mazda dealers. This manual should be kept up-to-date.

Mazda Motor Corporation reserves the right to alter the specifications and contents of this manual without obligation or advance notice.

All rights reserved. No part of this book may be reproduced or used in any form or by any means, electronic or mechanical—including photocopying and recording and the use of any kind of information storage and retrieval system—without permission in writing.

Mazda Motor Corporation
HIROSHIMA, JAPAN

APPLICATION:
This manual is applicable to vehicles beginning with the Vehicle Identification Numbers (VIN), and related materials shown on the following page.

CONTENTS

Title	Section
GENERAL INFORMATION	00
ENGINE	01
SUSPENSION	02
DRIVELINE/AXLE	03
BRAKES	04
TRANSMISSION/TRANSAXLE	05
STEERING	06
HEATER, VENTILATION & AIR CONDITIONING (HVAC)	07
RESTRAINTS	08
BODY & ACCESSORIES	09
ALPHABETICAL INDEX	AI

© 2005 Mazda Motor Corporation
PRINTED IN U.S.A., AUGUST 2005
Form No. 1858–1U–05H
Part No. 9999–95–063B–06

WARNING

Servicing a vehicle can be dangerous. If you have not received service-related training, the risks of injury, property damage, and failure of servicing increase. The recommended servicing procedures for the vehicle in this workshop manual were developed with Mazda-trained technicians in mind. This manual may be useful to non-Mazda trained technicians, but a technician with our service-related training and experience will be at less risk when performing service operations. However, all users of this manual are expected to at least know general safety procedures.

This manual contains "Warnings" and "Cautions" applicable to risks not normally encountered in a general technician's experience. They should be followed to reduce the risk of injury and the risk that improper service or repair may damage the vehicle or render it unsafe. It is also important to understand that the "Warnings" and "Cautions" are not exhaustive. It is impossible to warn of all the hazardous consequences that might result from failure to follow the procedures.

The procedures recommended and described in this manual are effective methods of performing service and repair. Some require tools specifically designed for a specific purpose. Persons using procedures and tools which are not recommended by Mazda Motor Corporation must satisfy themselves thoroughly that neither personal safety nor safety of the vehicle will be jeopardized.

The contents of this manual, including drawings and specifications, are the latest available at the time of printing, and Mazda Motor Corporation reserves the right to change the vehicle designs and alter the contents of this manual without notice and without incurring obligation.

Parts should be replaced with genuine Mazda replacement parts or with parts which match the quality of genuine Mazda replacement parts. Persons using replacement parts of lesser quality than that of genuine Mazda replacement parts must satisfy themselves thoroughly that neither personal safety nor safety of the vehicle will be jeopardized.

Mazda Motor Corporation is not responsible for any problems which may arise from the use of this manual. The cause of such problems includes but is not limited to insufficient service-related training, use of improper tools, use of replacement parts of lesser quality than that of genuine Mazda replacement parts, or not being aware of any revision of this manual.

VEHICLE IDENTIFICATION NUMBERS (VIN)

1YV	FP80C*65	M00001—
1YV	FP80D*65	M00001—
1YV	FP81C*65	M00001—
1YV	FP81D*65	M00001—
1YV	FP82D*65	M00001—
1YV	FP83D*65	M00001—
1YV	FP84C*65	M00001—
1YV	FP84D*65	M00001—
1YV	FP85C*65	M00001—
1YV	FP85D*65	M00001—
1YV	HP80C*65	M00001—
1YV	HP80D*65	M00001—
1YV	HP81C*65	M00001—
1YV	HP81D*65	M00001—
1YV	HP82D*65	M00001—
1YV	HP83D*65	M00001—
1YV	HP84C*65	M00001—
1YV	HP84D*65	M00001—
1YV	HP85C*65	M00001—
1YV	HP85D*65	M00001—
JM1	GG12L*6#	100001— (MAZDASPEED6)

RELATED MATERIALS

Material Name	MNAO Part No.	Mazda Material No.
2003 (U.S.A.)/2004 (Canada) Mazda6 Service Highlights	9999–95–101F–03	3372–1U–02I
2004 Mazda MX-5 Miata/MX-5, Mazda6, MPV Service Highlights	9999–95–MODL–04	3384–1U–03H
2004 Mazda6 Hatchback Wagon Service Highlights Supplement	9999–95–101F–04	3394–1U–04A
2005 Mazda6 Service Highlights Supplement	9999–95–101F–05	3399–1U–04H
2006 Mazda6, MAZDASPEED6 Service Highlights	9999–95–MODL–06	3410–1U–05H
1995, 1996, 1997, 1998, 1999, 2000 OBD-II Service Highlights	9999–95–OBD2–00	3344–1U–99K
Engine Workshop Manual AJ with Variable Valve Timing	9999–95–EAJV–03	1766–1U–02I
Engine Workshop Manual LF L3	9999–95–LFL3–05	1866–1U–05H
Engine Workshop Manual L3 WITH TC	9999–95–0L3T–06	1833–1U–05H
Manual Transaxle and Transfer Workshop Manual A26MX-R	9999–95–0AA6–06	1834–1U–05H
Manual Transaxle Workshop Manual A65M-R	9999–95–0A65–03	1755–1U–02I
Manual Transaxle Workshop Manual G35M-R	9999–95–0G35–03	1756–1U–02I
Automatic Transaxle Workshop Manual FN4A-EL	9999–95–FN4A–04	1793–1U–03I
Automatic Transaxle Workshop Manual FS5A-EL	9999–95–FS5A–06	1859–1U–05F
2003 (U.S.A.)/2004 (Canada) Mazda6 Bodyshop Manual	9999–95–099F–03	3373–1U–02I
2004 Mazda6 Hatchback Wagon Bodyshop Manual Supplement	9999–95–099F–04	3393–1U–04A

Material Name	MNAO Part No.	Mazda Material No.
2006 MAZDASPEED6 Bodyshop Manual Supplement	9999–95–099F–06	3402–1U–05H
2006 Mazda6, MAZDASPEED6 Wiring Diagram	9999–95–039G–06	5651–1U–05H

GENERAL INFORMATION

00
SECTION

GENERAL INFORMATION 00-00

00–00 GENERAL INFORMATION

VEHICLE IDENTIFICATION NUMBER (VIN) CODE 00–00–2
Vehicle Identification Number (VIN) Code [Mazda6] 00–00–2
Vehicle Identification Number (VIN) Code [MAZDASPEED6] 00–00–2
VEHICLE IDENTIFICATION NUMBER (VIN) 00–00–3
HOW TO USE THIS MANUAL 00–00–3
Range of Topics 00–00–3
Service Procedure 00–00–3
Symbols 00–00–5
Advisory Messages 00–00–5
Troubleshooting Procedure 00–00–6
Procedures for Use 00–00–7
UNITS 00–00–12
Conversion to SI Units (Système International d'Unités) 00–00–12
Rounding Off 00–00–12
Upper and Lower Limits 00–00–12
SERVICE CAUTIONS 00–00–13
Protection of the Vehicle 00–00–13
Preparation of Tools and Measuring Equipment 00–00–13
Special Service Tools 00–00–13
Disconnection of the Negative Battery Cable 00–00–13
Oil Leakage Inspection 00–00–13
Removal of Parts 00–00–14
Disassembly 00–00–14
Inspection During Removal, Disassembly 00–00–15
Arrangement of Parts 00–00–15
Cleaning of Parts 00–00–15
Reassembly 00–00–16
Adjustment 00–00–16
Rubber Parts and Tubing 00–00–16
Hose Clamps 00–00–17
Torque Formulas 00–00–17
Vise 00–00–17
Dynamometer 00–00–18
SST 00–00–18
INSTALLATION OF RADIO SYSTEM 00–00–19
ELECTRICAL SYSTEM 00–00–19
Electrical Parts 00–00–19
Wiring Harness 00–00–19
Connectors 00–00–20
Terminals 00–00–21
Sensors, Switches, and Relays 00–00–22
Wiring Harness 00–00–22
Fuse 00–00–23
Direction of View for Connector 00–00–23
Electrical Troubleshooting Tools 00–00–24
Precautions Before Welding 00–00–25
JACKING POSITIONS, VEHICLE LIFT (2 SUPPORTS) AND SAFETY STAND (RIGID RACK) POSITIONS 00–00–26
Jacking Positions [Mazda6] 00–00–26
Jacking Positions [MAZDASPEED6] 00–00–27
Vehicle Lift Positions 00–00–27
Safety Stand Positions 00–00–28
TOWING 00–00–28
Towing a 2WD Vehicle 00–00–28
Towing a 4WD Vehicle 00–00–29
TIEDOWN HOOK 00–00–29
Tiedown Hook [Mazda6] 00–00–29
Tiedown Hook [MAZDASPEED6] 00–00–29
IDENTIFICATION NUMBER LOCATIONS 00–00–31
Vehicle Identification Number (VIN) 00–00–31
Engine Identification Number 00–00–31
SAE STANDARDS 00–00–32
ABBREVIATIONS 00–00–33
PRE-DELIVERY INSPECTION 00–00–34
Pre-Delivery Inspection Table 00–00–34
SCHEDULED MAINTENANCE 00–00–36
Scheduled Maintenance Table for U.S.A., CANADA, and Puerto Rico [Mazda6] 00–00–36
Scheduled Maintenance Table for U.S.A., CANADA, and Puerto Rico [MAZDASPEED6] 00–00–38
Scheduled Maintenance Table for Mexico [Mazda6] 00–00–41

VEHICLE IDENTIFICATION NUMBER (VIN) CODE

E6U000000000W01

Vehicle Identification Number (VIN) Code [Mazda6]

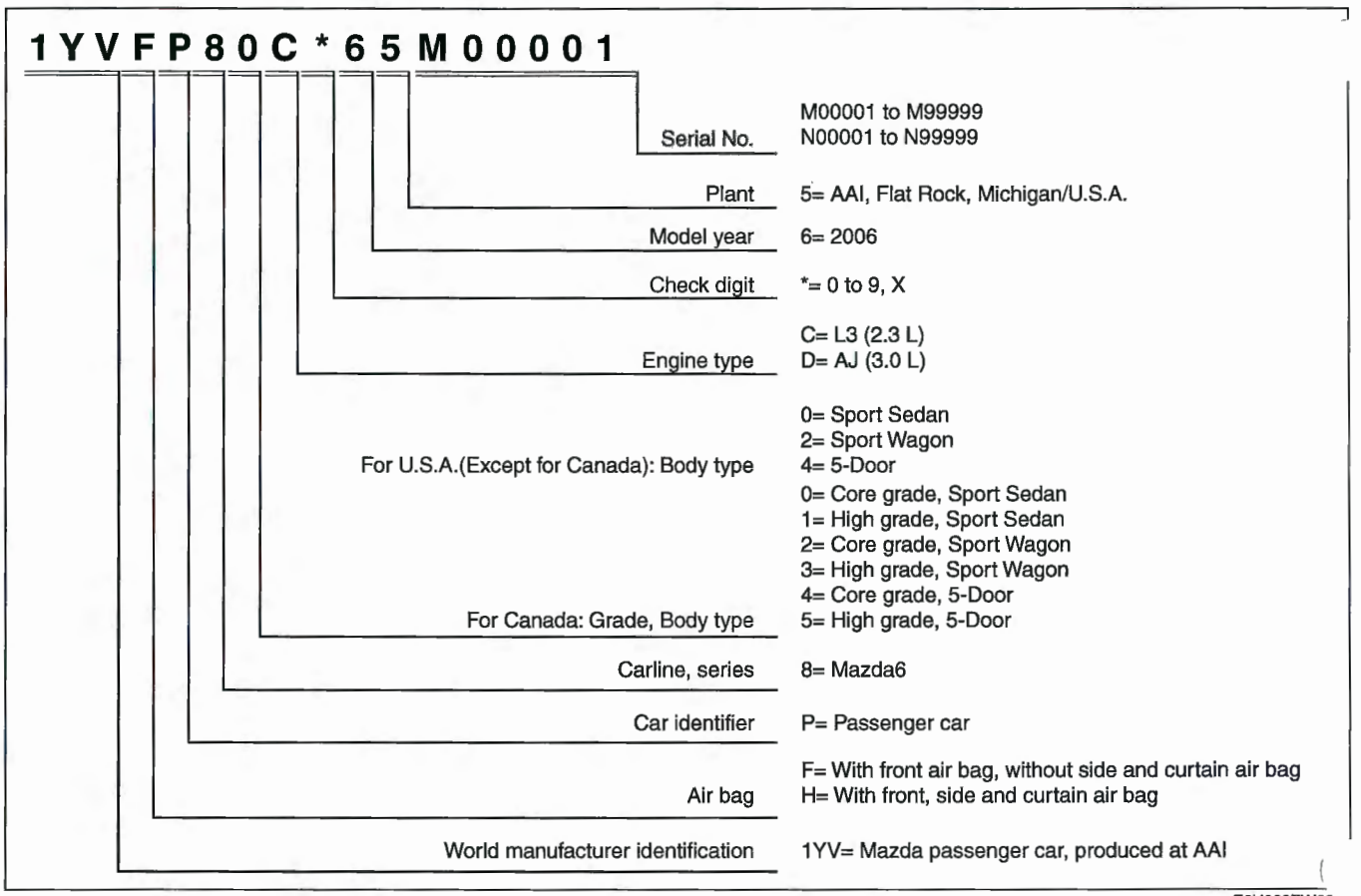

E6U000ZW600

Vehicle Identification Number (VIN) Code [MAZDASPEED6]

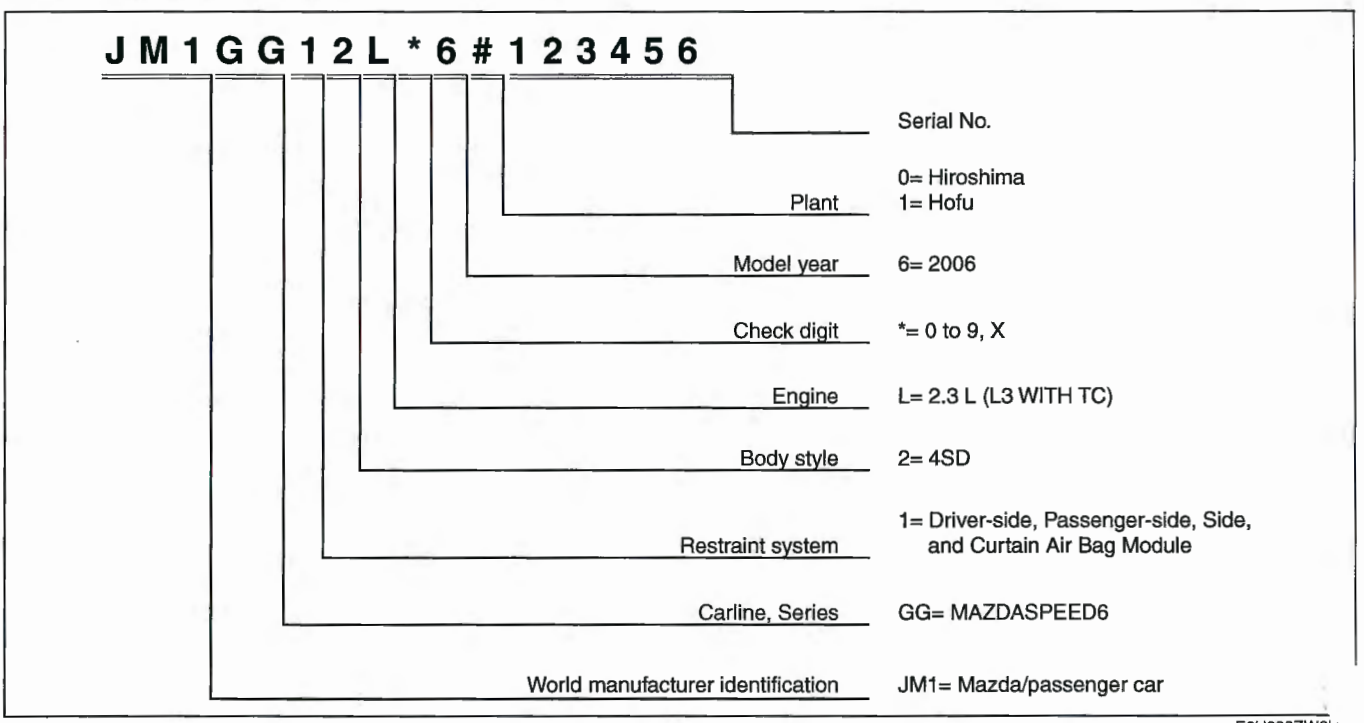

E6U000ZW6H0

VEHICLE IDENTIFICATION NUMBER (VIN)

E6U000000000W02

1YV FP80C*65 M00001—
1YV FP80D*65 M00001—
'V FP81C*65 M00001—
. V FP81D*65 M00001—
1YV FP82D*65 M00001—
1YV FP83D*65 M00001—
1YV FP84C*65 M00001—
1YV FP84D*65 M00001—
1YV FP85C*65 M00001—
1YV FP85D*65 M00001—
1YV HP80C*65 M00001—
1YV HP80D*65 M00001—
1YV HP81C*65 M00001—
1YV HP81D*65 M00001—
1YV HP82D*65 M00001—
1YV HP83D*65 M00001—
1YV HP84C*65 M00001—
1YV HP84D*65 M00001—
1YV HP85C*65 M00001—
1YV HP85D*65 M00001—
JM1 GG12L*6# 100001— (MAZDASPEED6)

HOW TO USE THIS MANUAL

E6U000000000W03

Range of Topics

- This manual contains procedures for performing all required service operations. The procedures are divided into the following five basic operations:
  - — Removal/Installation
  - — Disassembly/Assembly
  - — Replacement
  - — Inspection
  - — Adjustment
- Simple operations which can be performed easily just by looking at the vehicle (i.e., removal/installation of parts, jacking, vehicle lifting, cleaning of parts, and visual inspection) have been omitted.

Service Procedure

Inspection, adjustment

- Inspection and adjustment procedures are divided into steps. Important points regarding the location and contents of the procedures are explained in detail and shown in the illustrations.

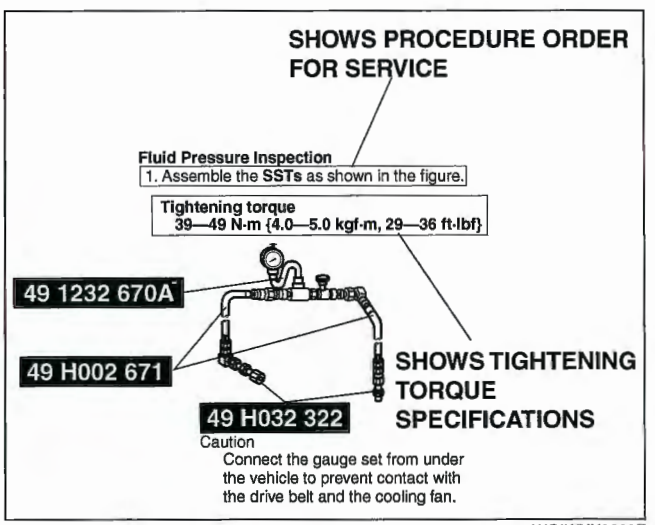

WGIWXX0009E

Repair procedure

1. Most repair operations begin with an overview illustration. It identifies the components, shows how the parts fit together, and describes visual part inspection. However, only removal/installation procedures that need to be performed methodically have written instructions.
2. Expendable parts, tightening torques, and symbols for oil, grease, and sealant are shown in the overview illustration. In addition, symbols indicating parts requiring the use of special service tools or equivalent are also shown.
3. Procedure steps are numbered and the part that is the main point of that procedure is shown in the illustration with the corresponding number. Occasionally, there are important points or additional information concerning a procedure. Refer to this information when servicing the related part.

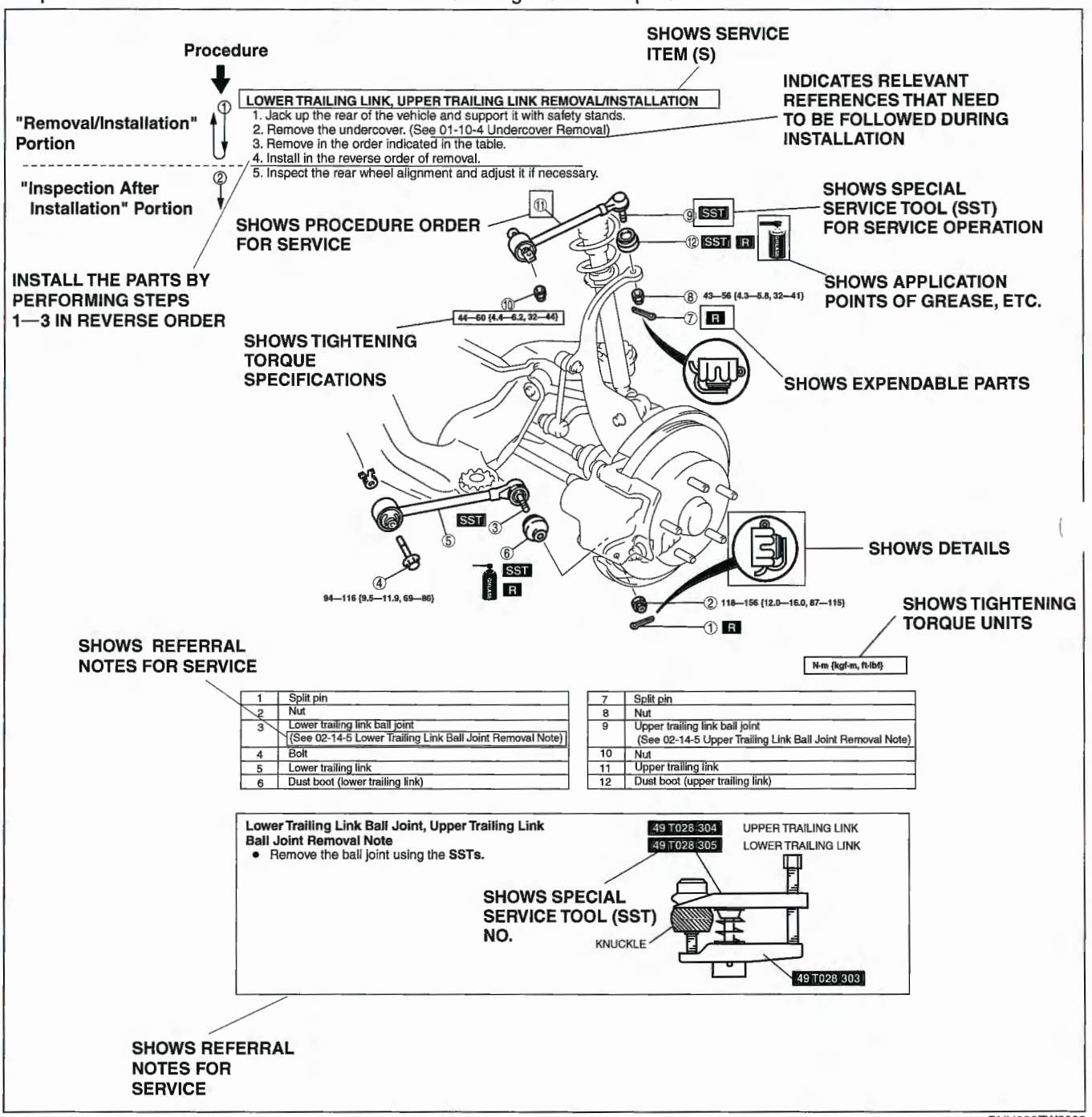

DHU000ZW5002

Symbols

- There are eight symbols indicating oil, grease, fluids, sealant, and the use of **SST** or equivalent. use. These symbols show application points or use of these materials during service.

Symbol	Meaning	Kind
	Apply oil	New appropriate engine oil or gear oil
	Apply brake fluid	New appropriate brake fluid
	Apply automatic transaxle/ transmission fluid	New appropriate automatic transaxle/ transmission fluid
	Apply grease	Appropriate grease
	Apply sealant	Appropriate sealant
	Apply petroleum jelly	Appropriate petroleum jelly
	Replace part	O-ring, gasket, etc.
	Use SST or equivalent	Appropriate tools

Advisory Messages

- You will find several **Warnings**, **Cautions**, **Notes**, **Specifications** and **Upper and Lower Limits** in this manual.

Warning

- A Warning indicates a situation in which serious injury or death could result if the warning is ignored.

Caution

- A Caution indicates a situation in which damage to the vehicle or parts could result if the caution is ignored.

Note

- A Note provides added information that will help you to complete a particular procedure.

Specification

- The values indicate the allowable range when performing inspections or adjustments.

Upper and lower limits

- The values indicate the upper and lower limits that must not be exceeded when performing inspections or adjustments.

Troubleshooting Procedure
Basic flow of troubleshooting

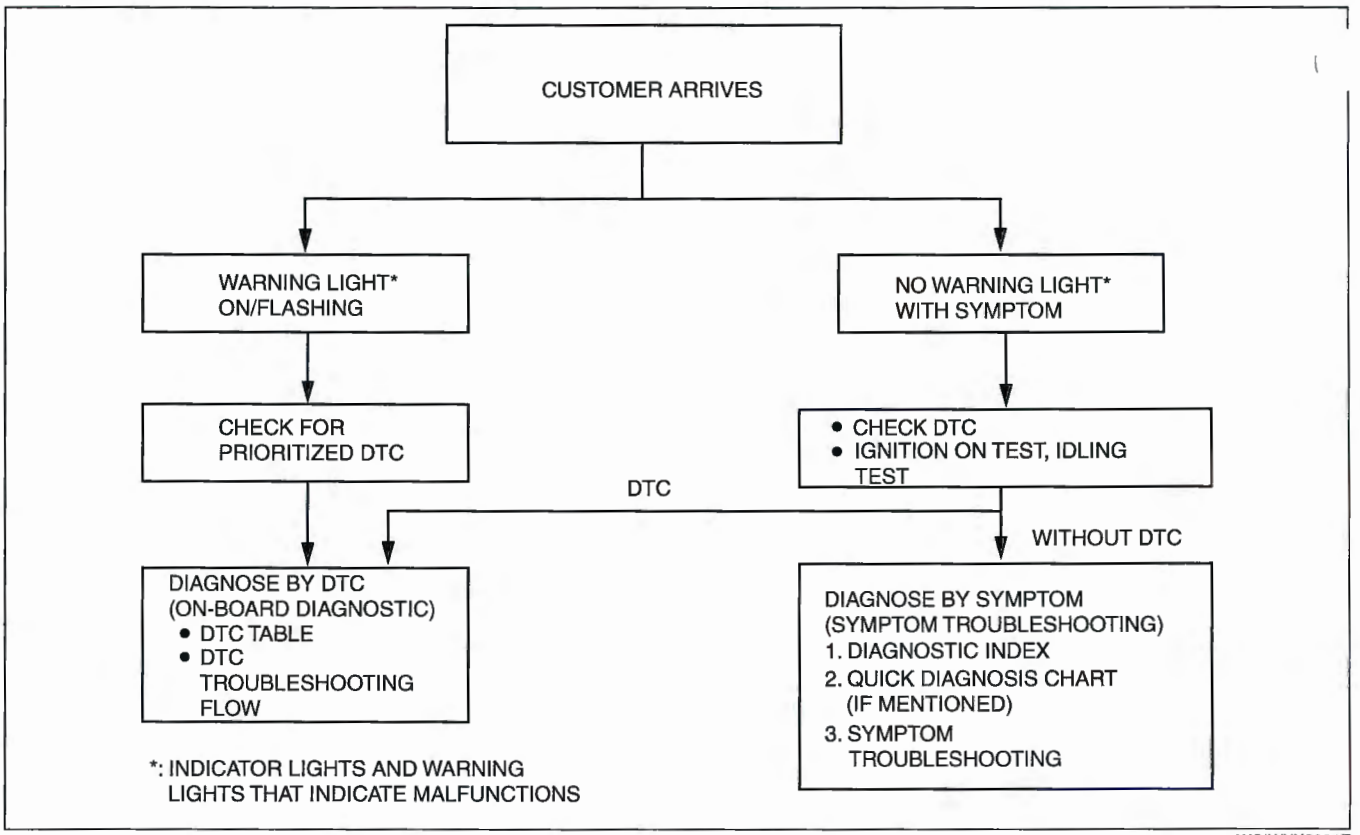

WGIWXX0001E

DTC troubleshooting flow (on-board diagnostic)
- Diagnostic trouble codes (DTCs) are important hints for repairing malfunctions that are difficult to simulate. Perform the specific DTC diagnostic inspection to quickly and accurately diagnose the malfunction.
- The on-board diagnostic function is used during inspection. When a DTC is shown specifying the cause of a malfunction, continue the diagnostic inspection according to the items indicated by the on-board diagnostic function.

Diagnostic index
- The diagnostic index lists the symptoms of specific malfunctions. Select the symptoms related or most closely relating to the malfunction.

Quick diagnosis chart (If mentioned)
- The quick diagnosis chart lists diagnosis and inspection procedures to be performed specifically relating to the cause of the malfunction.

Symptom troubleshooting
- Symptom troubleshooting quickly determines the location of the malfunction according to symptom type.

Procedures for Use

Using the basic inspection (section 05)

- Perform the basic inspection procedure before symptom troubleshooting.
- Perform each step in the order shown.
  The reference column lists the location of the detailed procedure for each basic inspection.
- Although inspections and adjustments are performed according to the reference column procedures, if the cause of the malfunction is discovered during basic inspection, continue the procedures as indicated in the action column.

SHOWS INSPECTION ORDER

SHOWS ITEM NAMES FOR DETAILED PROCEDURES

SHOW POINTS REQUIRING ATTENTION BASED ON INSPECTION RESULTS

BASIC INSPECTION

STEP	INSPECTION		ACTION
1	Perform the mechanical system test. (See 05-13-3 MECHANICAL SYSTEM TEST.) Is mechanical system normal?	Yes	Go to the next step.
		No	Repair or replace any malfunctioning parts according to the inspection result.
2	Turn the ignition switch to the ON position. When the selector lever is moved, does the selector illumination indicate synchronized position to the lever location? Also, when other ranges are selected from N or P during idling, does the vehicle move within 1—2 s?	Yes	Go to next step.
		No	Inspect the selector lever and TR switch. Repair or replace malfunctioning parts. (See 05-14-5 SELECTOR LEVER INSPECTION.) (See 05-13-10 TRANSMISSION RANGE (TR) SWITCH INSPECTION.) If the selector lever and TR switch are normal, go to the next step.
3	Inspect the ATF color condition. (See 05-13-8 AUTOMATIC TRANSMISSION FLUID (ATF) INSPECTION.) Are ATF color and odor normal?	Yes	Go to the next step.
		No	Repair or replace any malfunctioning parts according to the inspection result. Flush ATX and cooler line as necessary.
4	Perform the line pressure test. (See 05-13-3 Line Pressure Test.) Is the line pressure normal?	Yes	Go to the next step.
		No	Repair or replace any malfunctioning parts according to the inspection result.
5	Perform the stall test. (See 05-13-4 Stall Speed Test.) Is the stall speed normal?	Yes	Go to the next step.
		No	Repair or replace any malfunctioning parts according to the inspection result.
	Inspect the voltage at the following TCM terminals. (See 05-13-29 TCM INSPECTION.) • Terminal 2J (TFT sensor) • Terminals 1D, 2B, 2C, 2E (TR switch) • Terminal 2G (turbine sensor) • Terminal 2D (down switch) • Terminal 2I (up switch) • Terminal 1E (M range switch) • Terminal 1W (steering shift switch) Is the voltage normal?	Yes	Go to the next step.
		No	Repair or replace any malfunctioning parts according to the inspection result.

REFERENCE COLUMN

DDA000ZW4030

Using the DTC troubleshooting flow

- DTC troubleshooting flow shows diagnostic procedures, inspection methods, and proper action to take for each DTC.

DETECTION CONDITION describes the condition under which the DTC is detected.

TROUBLE CONDITION

DTC P0103

DTC P0103	MAF circuit high input
DETECTION CONDITION	PCM monitors input voltage from TP sensor after ignition key is turned on. If input voltage at PCM terminal 68 is above 8.25 V, PCM determines that TP circuit has malfunction. **Diagnostic support note** • This is a continuous monitor (CCM). • MIL illuminates if PCM detects the above malfunction during first drive cycle. Therefore, PENDING CODE is not available. • FREEZE FRAME DATE is available. • DTC is stored in the PCM memory.
POSSIBLE CAUSE	• MAF sensor malfunction • Connector or terminal malfunction • Open circuit in wiring between MAF sensor terminal D and PCM terminal 36 • Open circuit in MAF sensor ground circuit

POSSIBLE CAUSE describes possible point(s) of malfunction

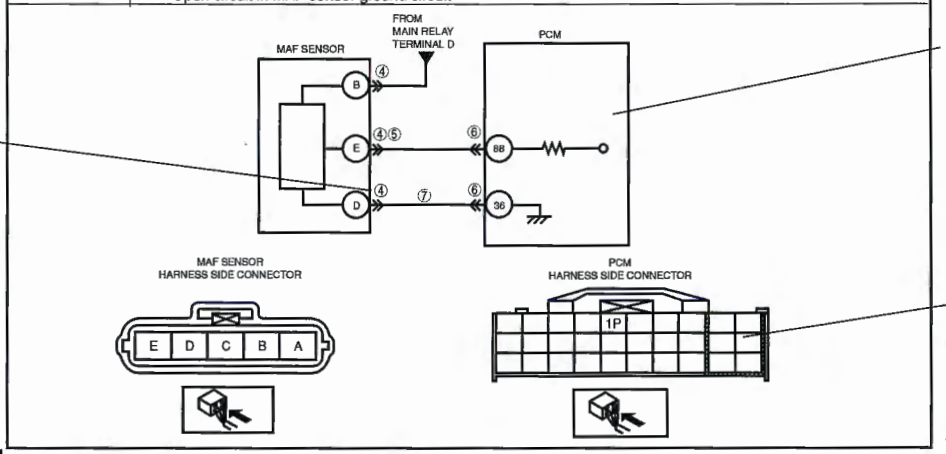

Indicates the circuit to be inspected (01 and 05 section)

Indicates the inspection step No. to be performed (01 and 05 section)

Indicates the connector related to the inspection

STEP shows the order of troubleshooting

Diagnostic procedure

STEP	INSPECTION		ACTION
1	**VERIFY FREEZE FRAME DATA HAS BEEN RECORDED** • Has FREEZE FRAME DATA been recorded?	Yes	Go to next step.
		No	Record FREEZE FRAME DATA on repair order, then go to next step.
2	**VERIFY RELATED REPAIR INFORMATION AVAILABILITY** • Are related Service Bulletins and/or on-line repair information available?	Yes	Perform repair or diagnosis according to available repair information. If vehicle is not repaired, then go to next step.
		No	Go to next step.
3	**VERIFY CURRENT INPUT SIGNAL STATUS IS CONCERN INTERMITTENT OR CONSTANT** • Connect WDS to DLC-2. • Start engine. • Access MAF V PID using WDS. • Is MAF V PID within 0.2 - 8.3 V?	Yes	Intermittent concern is existing. Go to INTERMITTENT CONCERNS TROUBLESHOOTING procedure. (See 01-03-33 INTERMITTENT CONCERN TROUBLESHOOTING)
		No	Go to next step.
4	**INSPECT POOR CONNECTION OF MAF SENSOR CONNECTOR** • Turn ignition key to OFF. • Disconnect MAF sensor connector. • Check for poor connection (damaged, pulled-out terminals, corrosion etc.). • Are there any malfunctions?	Yes	Repair or replace terminals, then go to Step 8.

ACTION describes the appropriate action to a take as according to the result (Yes/No).

INSPECTION describes the method to quickly determine the failedpart(s).

Reference item(s) to perform ACTION.

B3E0000W014

Using the diagnostic index

- The symptoms of the malfunctions are listed in the diagnostic index for symptom troubleshooting.
- The exact malfunction symptoms can be selected by following the index.

No.	TROUBLESHOOTING ITEM		DESCRIPTION	Page
1	Melting of main or other fuses		—	(See 01-03-6 MELT NO.1 MAIN OR OTHER FUSE)
2	MIL comes on		MIL is illuminated incorrectly.	(See 01-03-7 NO.2 MIL COMES ON)
3	Will not crank		Starter does not work.	(See 01-03-8 NO. 3 WILL NOT CRANK)
4	Hard start/long crank/erratic start/erratic crank		Starter cranks engine at normal speed but engine requires excessive cranking time before starting.	(See 01-03-9 NO. 4 HARD START/ LONG CRANK/ERRATIC CRANK)
5	Engine stalls.	After start/at idle	Engine stops unexpectedly at idle and/or after start.	(See 01-03-11 NO. 5 ENGINE-STALLS AFTER START/AT IDLE)
6	Cranks normally but will not start		Starter cranks engine at normal speed but engine will not run.	(See 01-03-15 NO.6 CRANKS NORMALLY BUT WILL NOT START)
7	Slow return to idle		Engine takes more time than normal to return to idle speed.	(See 01-03-19 NO. 7 SLOW RERUN TO IDLE)
8	Engine runs rough/rotling		Engine speed fluctuates between specified idle speed and lower speed and engine shakes excessively.	(See 01-03-20 NO. 8 ENGINE RUNS ROUGH/ROLLING IDLE)
9	Fast idle/runs on		Engine speed continues at fast idle after warm-up. Engine runs after ignition key is turned to OFF.	(See 01-03-23 NO. 9 FAST IDLE/RUNS ON)
10	Low idle/stalls during deceleration		Engine stops unexpectedly at beginning of deceleration or recovery from deceleration.	(See 01-03-24 NO. 10 LOW IDLE/ STALLS DURING DECELERATION)

BHE0000W102

Using the quick diagnosis chart

- The chart lists the relation between the symptom and the cause of the malfunction.
- The chart is effective in quickly narrowing down the relation between symptom and cause of the malfunction. It also specifies the area of the common cause when multiple malfunction symptoms occur.
- The appropriate diagnostic inspection relating to malfunction cause as specified by the symptoms can be selected by looking down the diagnostic inspection column of the chart.

② **PARTS WHICH MAY BE THE CAUSE OF PROBLEMS**

SYMPTOM QUICK DIAGNOSTIC CHART

PART WHICH MAY BE THE SYMPTOM

① **CHOOSE THE ACTUALSYMPTOM**

Troubleshooting item \ Possible factor			Starter motor malfunction (Mechanical or electrical)	Starter circuit including ignition switch open	Improper engine oil level	Low or dead battery	Charging system malfunction	Improper engine compression	Improper valve timing	Hydrolocked engine	Improper engine oil viscosity	Improper dipstick	Base engine malfunction	Drive plate or flywheel seized	Improper tension or damaged drive belts	Improper engine coolant level	Water and anti-freeze mixture improperly	Cooling system malfunction (Radiator, hoses, overflow system, thermostat, etc.)	Cooling fan system malfunction	Engine or transaxle mounts improperly installed	Cooling fan or condenser fan seat improperly	Accelerator cable free play mis-adjustment	Fuel quality
1	Melts of main or other fuse																						
2	MIL comes on																						
3	Will not crank		x	x		x	x			x				x									
4	Hard to start/long crank/erratic start/erratic crank																						x
5	Engine stalls	After start/at idle						x	x	x													x
6	Cranks normally but will not start							x	x	x													x
7	Slow return to idle																		x				
8	Engine runs rough/rolling idle							x	x														x
9	Fast idle/runs on																					x	
10	Low idle/stalls during deceleration																						
11	Engine stalls/quits	Acceleration/cruise						x	x														x
	Engine runs rough	Acceleration/cruise						x	x														x
	Misses	Acceleration/cruise						x	x														x
	Buck/jerk	Acceleration/cruise/ deceleration						x	x														x
	Hesitation/stumble	Acceleration						x	x														x
	Surges	Acceleration/cruise						x	x														x
12	Lack/loss of power	Acceleration/cruise						x	x														x
13	Knocking/pinging	Acceleration/cruise						x										x					
14	Poor fuel economy							x	x							x		x	x				x
15	Emissions compliance							x	x				x					x					
16	High oil consumption/leakage										x	x	x										
17	Cooling system concerns	Overheating													x	x	x	x	x				
18	Cooling system concerns	Runs cold																x	x				
19	Exhaust smoke												x					x					
20	Fuel odor (in engine compartment)																						
21	Engine noise				x								x		x								
22	Vibration concerns (engine)														x					x	x		
23	A/C does not work sufficiently																						
24	A/C always on/ A/C compressor runs continuously																						
25	A/C does not cut off under wide open throttle conditions																						
26	Exhaust sulphur smell																						x
27	Fuel refill concerns																						
28	Fuel filling shut off issues																						
29	Intermittent concerns					x																	
30	Constant voltage																						
31	Spark plug condition							x			x		x				x						x
32	Automatic transaxle concerns	Upshift/downshift/ engagement	(See 05-01 AUTOMATIC TRANSAXLE SYMPTOM TROUBLESOOTING)																				

B3E0000W013

Using the symptom troubleshooting

- Symptom troubleshooting shows diagnostic procedures, inspection methods, and proper action to take for each trouble symptom.

DESCRIPTION describes what kind of TROUBLE SYMPTOM

TROUBLE SYMPTOM

14	Engine flares up or slips when upshifting or down shifting
DESCRIPTION	• When accelerator pedal is depressed for driveway, engine speed increase but vehicle speed increase slowly. • When accelerator is depressed while driving, engine speed increases but vehicle not.
POSSIBLE CAUSE	• There is clutch slip because clutch is stuck or line pressure is low. — Clutch stuck, slippage (forward clutch, 3-4 clutch, 2-4 brake band, one-way clutch 1, one-way clutch 2) • Line pressure low • Malfunction or mis-adjustment of TP sensor • Malfunction of VSS • Malfunction of input/turbine speed sensor • Malfunction of sensor ground • Malfunction of shift solenoid A, B or C • Malfunction of TCC solenoid valve • Malfunction of body ground • Malfunction of throttle cable • Malfunction of throttle valve body — Poor operating of mechanical pressure • Selector lever position disparity • TR switch position disparity **Note** • Before following troubleshooting steps, make sure that Automatic Transaxle On-board Diagnostic and Automatic Transaxle Basic Inspection are conducted.

POSSIBLE CAUSE describes possible point of malfunction

STEP shows the order of troubleshooting.

Diagnostic procedure

STEP	INSPECTION		ACTION
1	• Is line pressure okay?	Yes	Go to next step.
		No	Repair or replace any defective parts according to inspection results.
2	• Is shift point okay? (See 05-17-5 ROAD TEST)	Yes	Go to next step
		No	Go to symptom troubleshooting No.9 "Abnormal shift".
3	• Stop engine and turn ignition switch on. • Connect WDS to DLC-2. • Simulate SHIFT A, SHIFT B and SHIFT C PIDs for ON. • Is operating sound of shift solenoids heard?	Yes	• Overhaul control valve body and repair or replace any defective parts. (See ATX Workshop Manual GF4A-EL (1666-1A-99F)) • If problem remains, replace or overhaul transaxle and repair or replace defective parts. (See 05-17-15 AUTOMATIC TRANSAXLE REMOVEVAL/INSTALLATION)
		No	• Inspect for bend, damage, corrosion or loose connection if shift solenoid A, B, or C terminal on ATX. • Inspect for shift solenoid mechanical stuck. (See 05-17-14 Inspection of Operation) • If shift solenoids are okay, inspect for open or short circuit between PCM connector terminal A, B or C.
4	• Verify test results. — If okay, return to diagnostic index to service any additional symptoms. — If malfunction remains, inspect related Service Bulletins and/or On-line Repair Information and perform repair or diagnosis. — If vehicle is repaired, troubleshooting completed. — If vehicle is not repaired or additional diagnostic information is not available, replace or reprogram PCM.		

Reference item(s) for additional information to perform INSPECTION.

INSPECTION describes the method to quickly determine the failed part.

ACTION describes the appropriate action to take as a result (YES/NO) of INSPECTION.

How to perform ACTION is described in the relative material shown.

Reference item(s) to perform ACTION.

BHE0000W103

UNITS

E6U000000000W04

Electric current	A (ampere)
Electric power	W (watt)
Electric resistance	ohm
Electric voltage	V (volt)
Length	mm (millimeter)
	in (inch)
Negative pressure	kPa (kilo pascal)
	mmHg (millimeters of mercury)
	inHg (inches of mercury)
Positive pressure	kPa (kilo pascal)
	kgf/cm^2 (kilogram force per square centimeter)
	psi (pounds per square inch)
Number of revolutions	rpm (revolutions per minute)
Torque	N·m (Newton meter)
	kgf·m (kilogram force meter)
	kgf·cm (kilogram force centimeter)
	ft·lbf (foot pound force)
	in·lbf (inch pound force)
Volume	L (liter)
	US qt (U.S. quart)
	Imp qt (Imperial quart)
	ml (milliliter)
	cc (cubic centimeter)
	cu in (cubic inch)
	fl oz (fluid ounce)
Weight	g (gram)
	oz (ounce)

Conversion to SI Units (Système International d'Unités)

- All numerical values in this manual are based on SI units. Numbers shown in conventional units are converted from these values.

Rounding Off

- Converted values are rounded off to the same number of places as the SI unit value. For example, if the SI unit value is 17.2 and the value after conversion is 37.84, the converted value will be rounded off to 37.8.

Upper and Lower Limits

- When the data indicates upper and lower limits, the converted values are rounded down if the SI unit value is an upper limit and rounded up if the SI unit value is a lower limit. Therefore, converted values for the same SI unit value may differ after conversion. For example, consider 2.7 kgf/cm^2 in the following specifications:

  210—260 kPa {2.1—2.7 kgf/cm^2, 30—38 psi}
  270—310 kPa {2.7—3.2 kgf/cm^2, 39—45 psi}

- The actual converted values for 2.7 kgf/cm^2 are 264 kPa and 38.4 psi. In the first specification, 2.7 is used as an upper limit, so the converted values are rounded down to 260 and 38. In the second specification, 2.7 is used as a lower limit, so the converted values are rounded up to 270 and 39.

SERVICE CAUTIONS

E6U000000000W06

Protection of the Vehicle

- Always be sure to cover fenders, seats and floor areas before starting work.

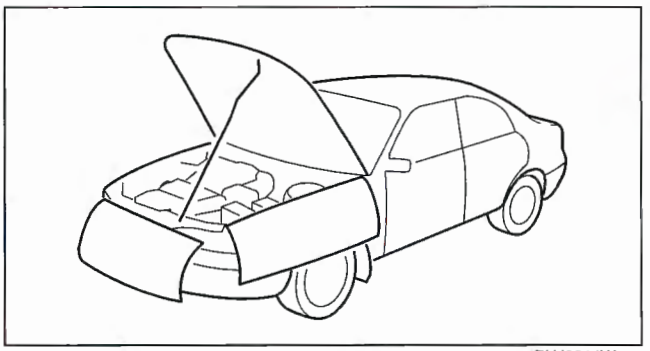

BHJ0014W001

Preparation of Tools and Measuring Equipment

- Be sure that all necessary tools and measuring equipment are available before starting any work.

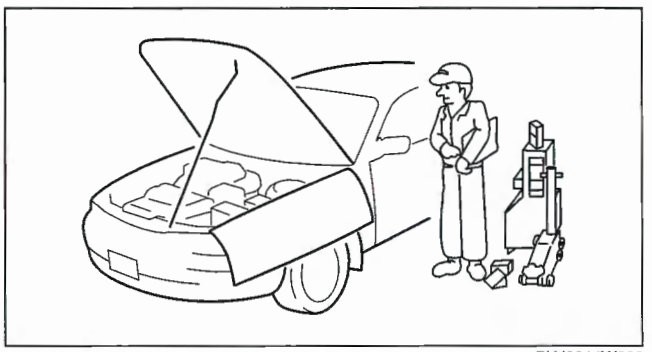

BHJ0014W002

ecial Service Tools

Use special service tools or equivalent when they are required.

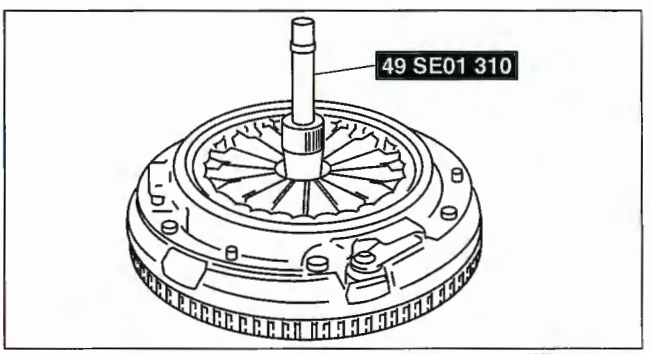

WGIWXX0024E

Disconnection of the Negative Battery Cable

- Before beginning any work, turn the ignition switch to LOCK position, then disconnect the negative battery cable and wait for more than 1 min. to allow the backup power supply of the SAS control module to deplete its stored power. Disconnecting the battery cable will delete the memories of the clock, audio, and DTCs, etc. Therefore, it is necessary to verify those memories before disconnecting the cable.

Oil Leakage Inspection

- Use either of the following procedures to identify the type of oil that is leaking:

Using UV light (black light)

1. Remove any oil on the engine or transaxle/transmission.

Note

- Referring to the fluorescent dye instruction manual, mix the specified amount of dye into the engine oil (ATF (or transaxle/transmission oil).

2. Pour the fluorescent dye into the engine oil or ATF (or transaxle/transmission oil).
3. Allow the engine to run for 30 min.
4. Inspect for dye leakage by irradiating with UV light (black light), and identify the type of oil that is leaking.
5. If no dye leakage is found, allow the engine to run for another 30 min. or drive the vehicle then reinspect.
6. Find where the oil is leaking from, then make necessary repairs.

Note

- To determine whether it is necessary to replace the oil after adding the fluorescent dye, refer to the fluorescent dye instruction manual.

Not using UV light (black light)

1. Gather some of the leaking oil using an absorbent white tissue.
2. Take samples of engine oil and ATF (or transaxle/transmission oil), both from the dipstick, and place them next to the leaked oil already gathered on the tissue.
3. Compare the appearance and smell, and identify the type of oil that is leaking.
4. Remove any oil on the engine or transaxle/ transmission.
5. Allow the engine to run for 30 min.
6. Check the area where the oil is leaking, then make necessary repairs.

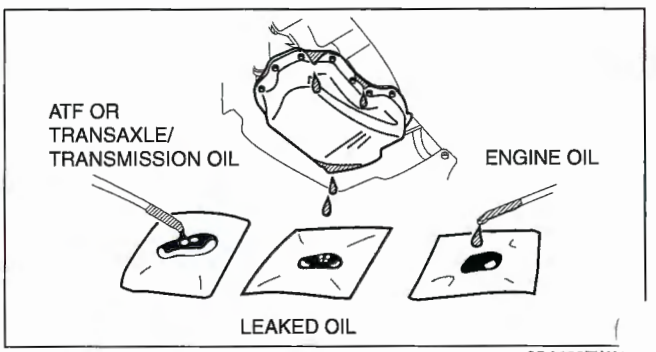

CDA000ZWA0[illegible]

Removal of Parts

- While correcting a problem, also try to determine its cause. Begin work only after first learning which parts and subassemblies must be removed and disassembled for replacement or repair. After removing the part, plug all holes and ports to prevent foreign material from entering.

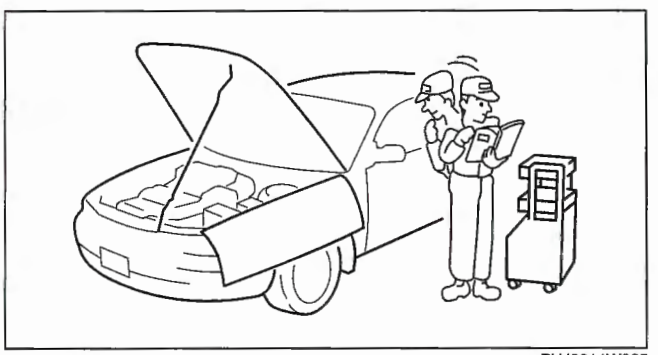
BHJ0014W005

Disassembly

- If the disassembly procedure is complex, requiring many parts to be disassembled, all parts should be marked in a place that will not affect their performance or external appearance and identified so that reassembly can be performed easily and efficiently.

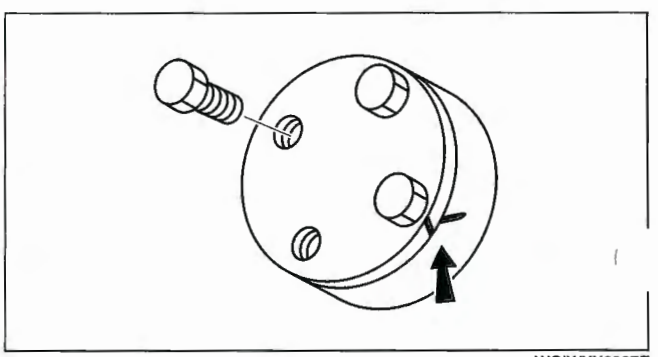
WGIWXX0027E

Inspection During Removal, Disassembly

- When removed, each part should be carefully inspected for malfunction, deformation, damage and other problems.

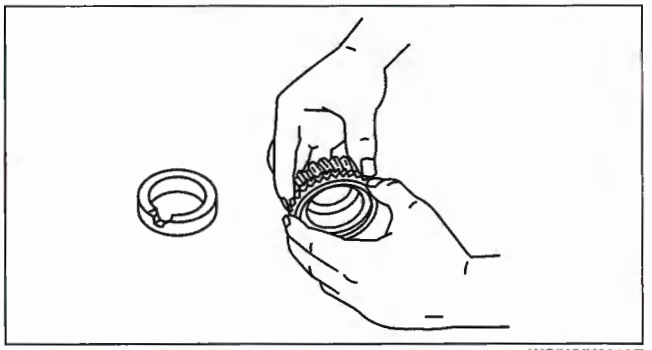

WGIWXX0028E

Arrangement of Parts

- All disassembled parts should be carefully arranged for reassembly.
- Be sure to separate or otherwise identify the parts to be replaced from those that will be reused.

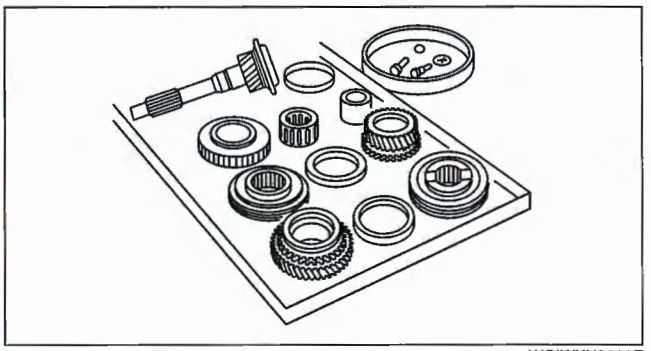

WGIWXX0029E

Cleaning of Parts

All parts to be reused should be carefully and thoroughly cleaned in the appropriate method.

Warning

- **Using compressed air can cause dirt and other particles to fly out causing injury to the eyes. Wear protective eye wear whenever using compressed air.**

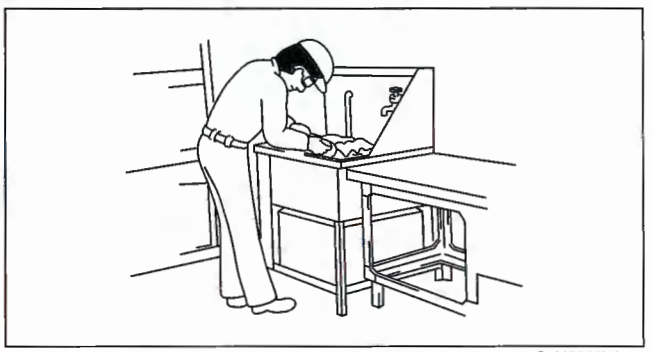

C5U0000W001

Reassembly

- Standard values, such as torques and certain adjustments, must be strictly observed in the reassembly of all parts.
- If removed, these parts should be replaced with new ones:
  - — Oil seals
  - — Gaskets
  - — O-rings
  - — Lockwashers
  - — Cotter pins
  - — Nylon nuts

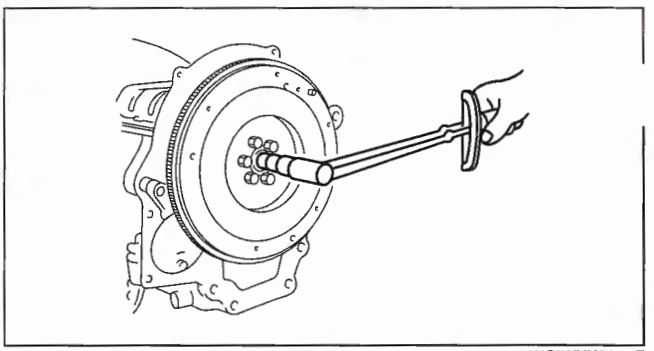

WGIWXX0031E

- Depending on location:
  - — Sealant and gaskets, or both, should be applied to specified locations. When sealant is applied, parts should be installed before sealant hardens to prevent leakage.
  - — Oil should be applied to the moving components of parts.
  - — Specified oil or grease should be applied at the prescribed locations (such as oil seals) before reassembly.

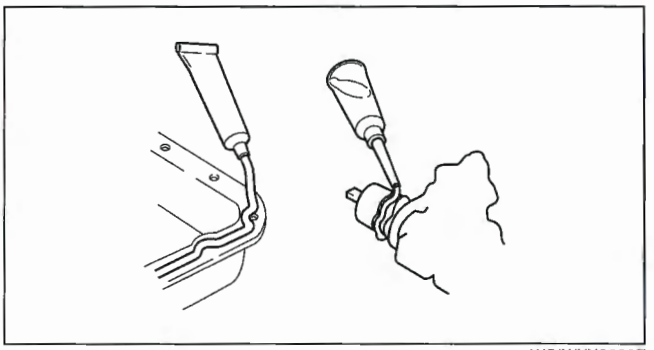

WGIWXX0032E

Adjustment

- Use suitable gauges and testers when making adjustments.

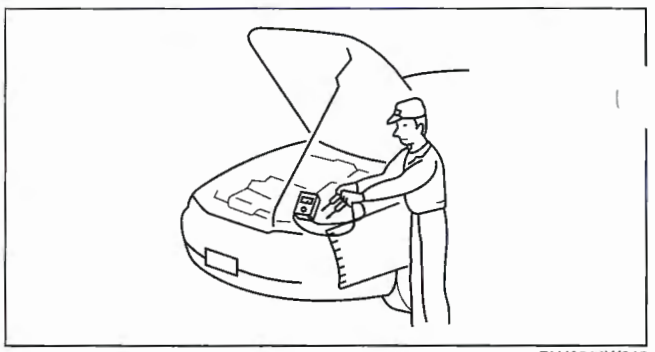

BHJ0014W012

Rubber Parts and Tubing

- Prevent gasoline or oil from getting on rubber parts or tubing.

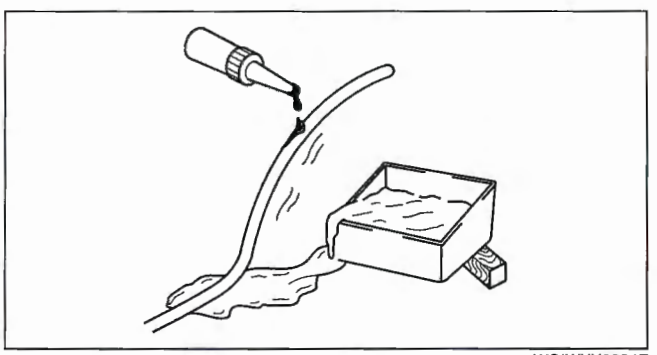

WGIWXX0034E

Hose Clamps

- When reinstalling, position the hose clamp in the original location on the hose and squeeze the clamp lightly with large pliers to ensure a good fit.

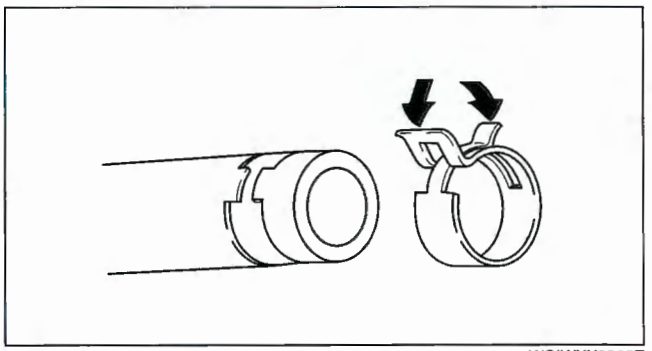

WGIWXX0035E

Torque Formulas

- When using a torque wrench-**SST** or equivalent combination, the written torque must be recalculated due to the extra length that the **SST** or equivalent adds to the torque wrench. Recalculate the torque by using the following formulas. Choose the formula that applies to you.

Torque Unit	Formula
N·m	N·m × [L/(L+A)]
kgf·m	kgf·m × [L/(L+A)]
kgf·cm	kgf·cm × [L/(L+A)]
ft·lbf	ft·lbf × [L/(L+A)]
in·lbf	in·lbf × [L/(L+A)]

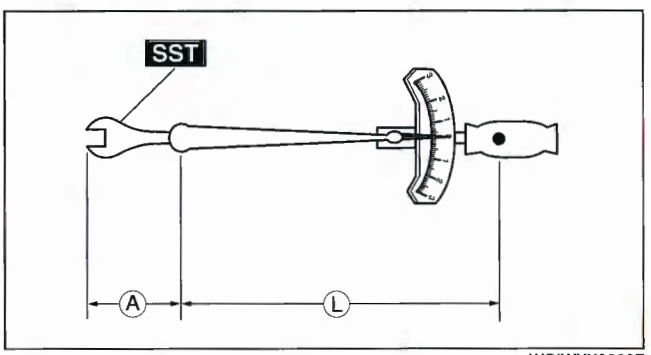

WGIWXX0036E

A : The length of the **SST** past the torque wrench drive.
: The length of the torque wrench.

Vise

- When using a vise, put protective plates in the jaws of the vise to prevent damage to parts.

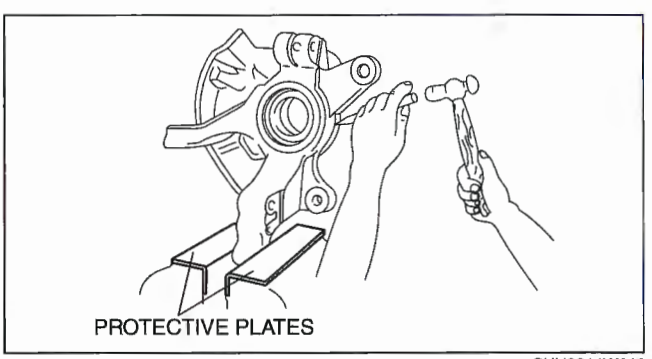

CHU0014W010

Dynamometer

- When inspecting and servicing the power train on the dynamometer or speed meter tester, pay attention to the following:
  - — Place a fan, preferably a vehicle-speed proportional type, in front of the vehicle.
  - — Make sure the vehicle is in a facility with an exhaust gas ventilation system.
  - — Since the rear bumper might deform from the heat, cool the rear with a fan. (Surface of the bumper must be below **70°C {158°F} degrees**.)
  - — Keep the area around the vehicle uncluttered so that heat does not build up.
  - — Watch the water temperature gauge and don't overheat the engine.
  - — Avoid added load to the engine and maintain normal driving conditions as much as possible.

Note

- When only the front or rear wheels are rotated on a chassis dynamometer or equivalent, the ABS/TCS/DSC CM determines that there is a malfunction in the ABS/TCS/DSC and illuminates the following lights:
  - — Vehicles with ABS/TCS
    - ABS warning light
    - Brake system warning light
    - TCS indicator light
  - — Vehicles with DSC
    - ABS warning light
    - Brake system warning light
    - DSC indicator light
- If the above lights are illuminated, dismount the vehicle from the chassis dynamometer and turn the ignition switch to the LOCK position. Then, turn the ignition switch back to the ON position, run the vehicle at 10 km/h or more and verify that the warning lights go out. In this case, a DTC will be stored in the memory. Clear the DTC from the memory by following the memory clearing procedure [ABS]/[TCS]/[DSC] in the on-board diagnostic system. (See 04–02A–2 ABS/TCS ON-BOARD DIAGNOSIS.), (See 04–02B–3 DSC ON-BOARD DIAGNOSIS.)

4WD inspection/service
Speedometer tester measurement

Caution

- **Install the tension bar (chain wire) to the tie down hook and secure the vehicle to prevent it from rolling and running off.**
- **Do not accelerate suddenly from a standstill or accelerate/decelerate rapidly.**

Free roller type

1. Align the free rollers with the wheel base and tread, then set them on the floor properly.
2. Drive the vehicle slowly onto the tester roller and free rollers.
3. Start the engine and accelerate gradually to inspect the speedometer.
4. After inspection, decelerate gradually with gentle braking.

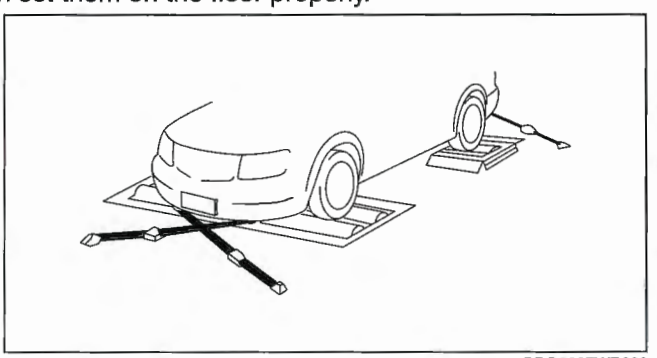

DBG000ZWB022

Propeller shaft removal type

1. Remove the propeller shaft. (See 03–15–4 PROPELLER SHAFT REMOVAL/INSTALLATION.)
2. Place the front wheels on the tester roller.
3. Accelerate gradually and inspect the speedometer.
4. After inspection, decelerate gradually with gentle braking.
5. Install the propeller shaft. (See 03–15–4 PROPELLER SHAFT REMOVAL/INSTALLATION.)

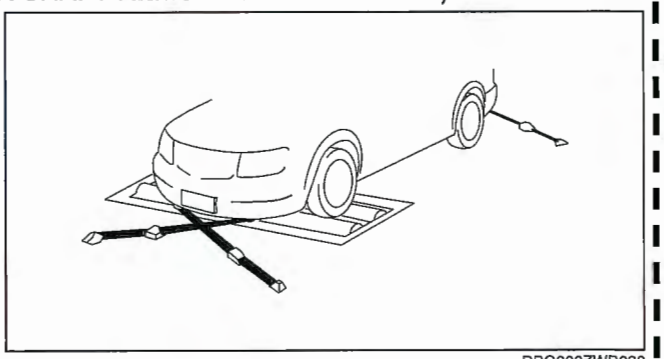

DBG000ZWB023

Brake tester measurement

1. Place the wheels (front or rear) to be measured on the tester roller.
2. Shift to the N position/neutral.
3. Activate the tester roller and measure braking force.
   If there is a large amount of brake drag force, the electronic control system coupling may be affected. Jack up all four wheels to eliminate the effect of the coupling and rotate each wheel by hand to verify the rotation condition.

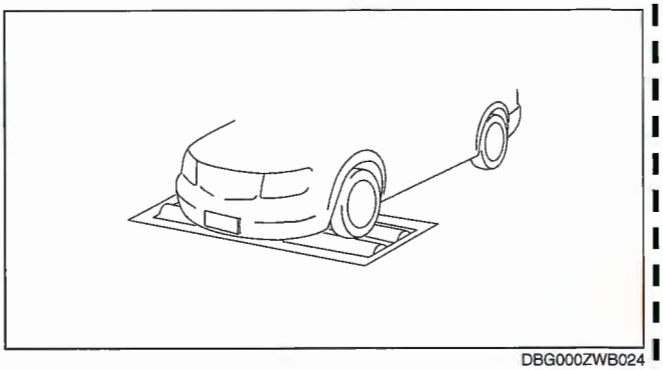

DBG000ZWB024

Wheel balancer (on the vehicle balancer)

1. Jack up all four wheels.
2. Support the wheels (front or rear) on the side to be measured (near the wheels) using a wheel balancer sensor stand.
3. Support the wheels on the side not to be measured (near the wheels) using safety stands.
4. Set up the wheel balancer and rotate the wheels using engine drive to measure the wheel balance.

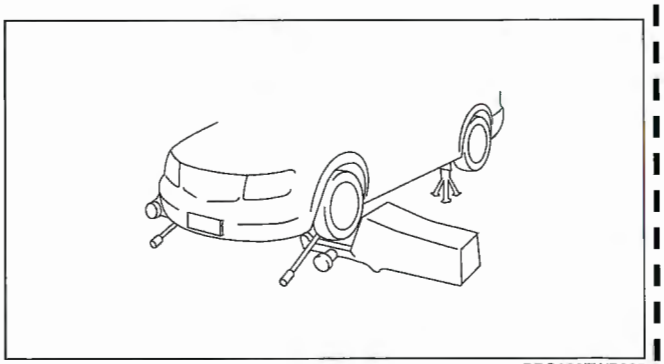

DBG000ZWB025

SST

- Some global **SST** or equivalent are used as **SSTs** necessary for engine repair. Note that these **SSTs** are marked with global **SST** numbers.
- Note that a global **SST** number is written together with a corresponding Mazda **SST** number as shown below.

Example (01–60 section)

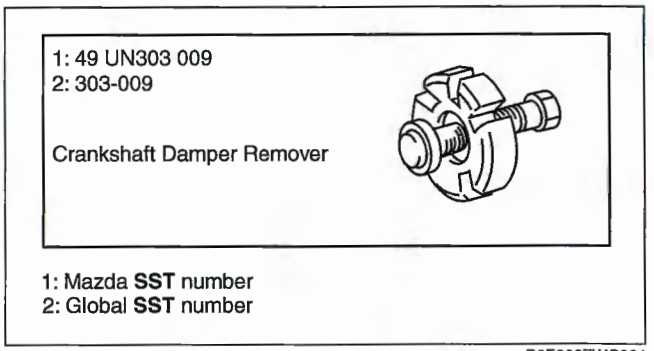

Example (except 01–60 section)

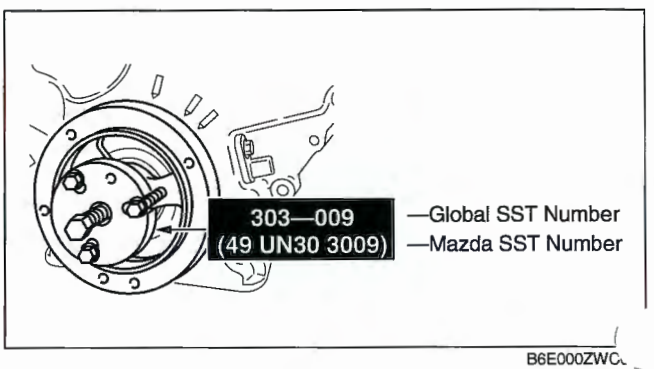

INSTALLATION OF RADIO SYSTEM

E6U000000000W07

- If a radio system is installed improperly or if a high-powered type is used, the CIS and other systems may be affected. When the vehicle is to be equipped with a radio, observe the following precautions:
  - — Install the antenna at the farthest point from control modules.
  - — Install the antenna feeder as far as possible from the control module harnesses.
  - — Ensure that the antenna and feeder are properly adjusted.
  - — Do not install a high-powered radio system.

ELECTRICAL SYSTEM

E6U000000000W08

Electrical Parts

Battery cable

- Before disconnecting connectors or removing electrical parts, disconnect the negative battery cable.

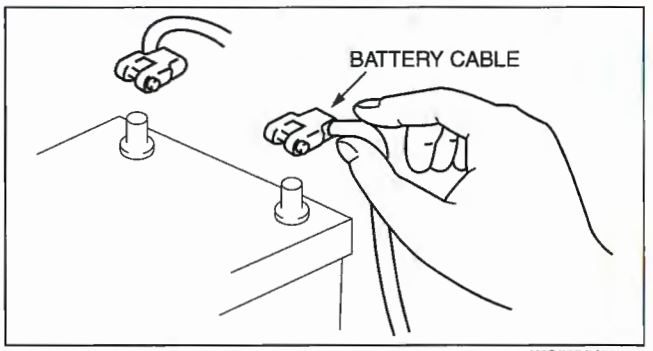

WGIWXX0007E

Wiring Harness

- To remove the wiring harness from the clip in the engine room, pry up the hook of the clip using a flathead screwdriver.

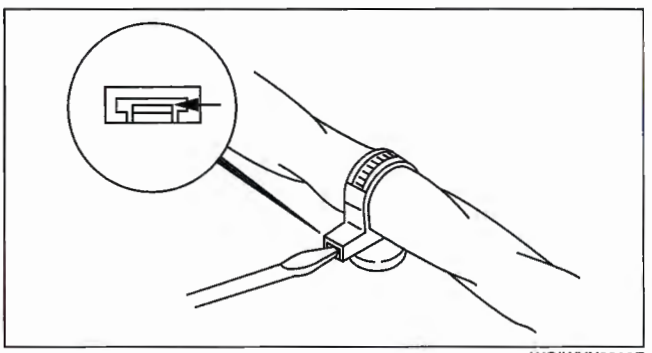

WGIWXX0039E

Caution

Do not remove the harness protective tape. Otherwise, the wires could rub against the body, which could result in water penetration and electrical shorting.

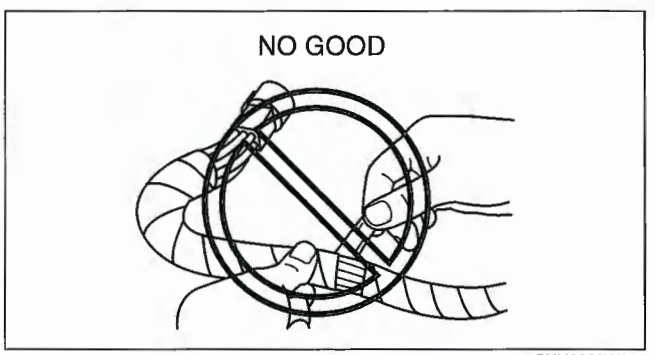

CHU0000W010

Connectors
Disconnecting connectors

- When disconnecting connector, grasp the connectors, not the wires.

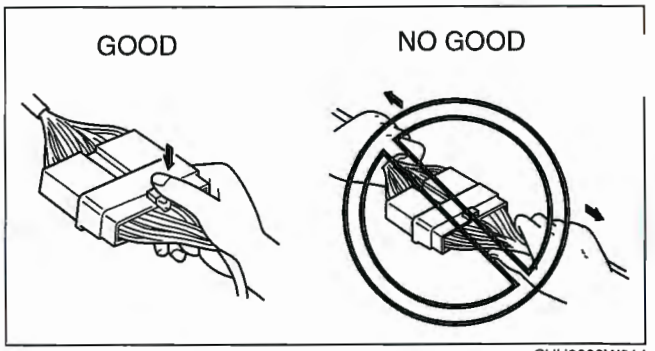

CHU0000W014

- Connectors can be disconnected by pressing or pulling the lock lever as shown.

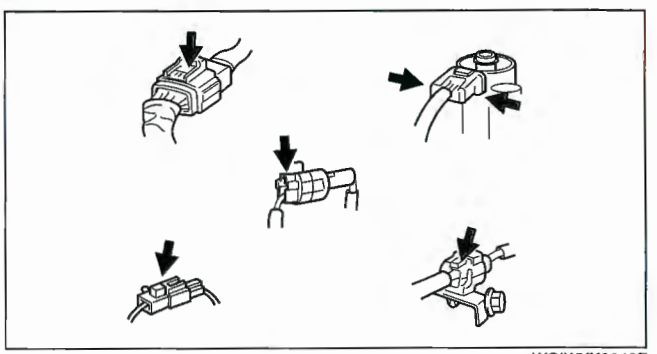
WGIWXX0042E

Locking connector

- When locking connectors, listen for a click indicating they are securely locked.

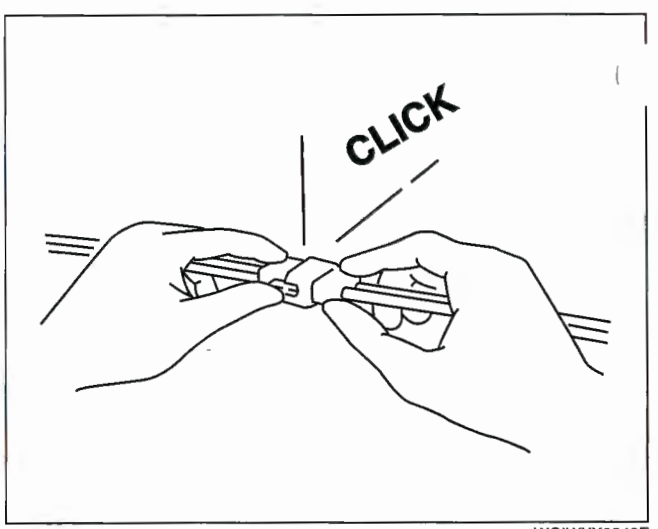

WGIWXX0043E

Inspection

Caution
- **To prevent damage to the terminal, wrap a thin wire around the tester probe before inserting into terminal.**

- When a tester is used to inspect for continuity or measuring voltage, insert the tester probe from the wiring harness side.

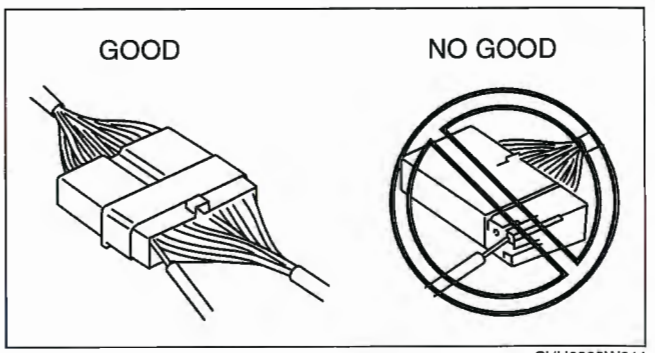

CHU0000W011

- Inspect the terminals of waterproof connectors from the connector side since they cannot be accessed from the wiring harness side.

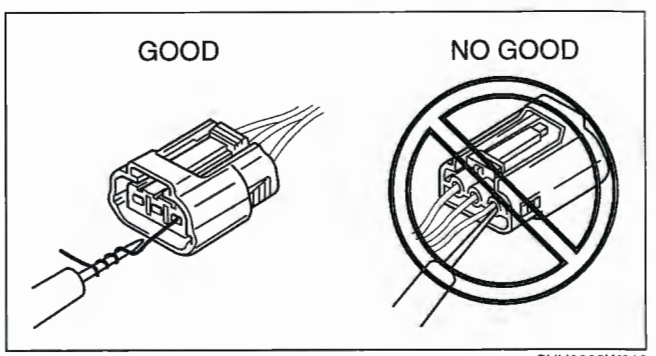

CHU0000W012

Terminals
Inspection
- Pull lightly on individual wires to verify that they are secured in the terminal.

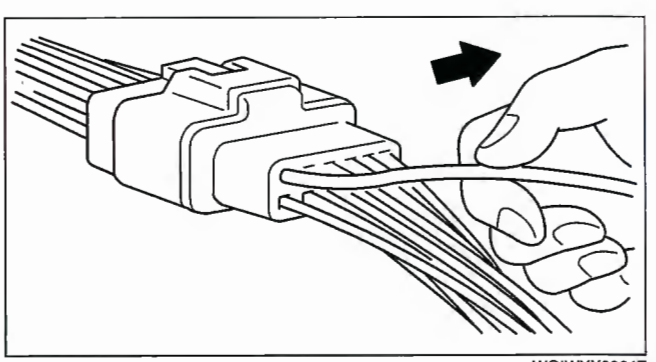
WGIWXX0064E

Replacement

- Use the appropriate tools to remove a terminal as shown. When installing a terminal, be sure to insert it until it locks securely.
- Insert a thin piece of metal from the terminal side of the connector and with the terminal locking tab pressed down, pull the terminal out from the connector.

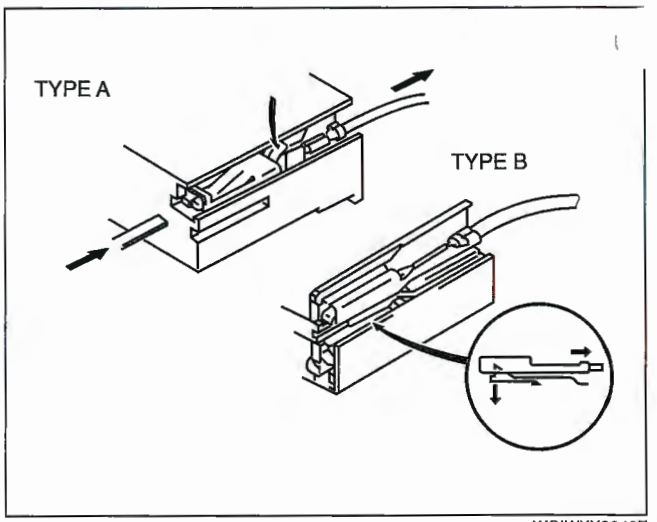

WGIWXX0046E

Sensors, Switches, and Relays

- Handle sensors, switches, and relays carefully. Do not drop them or strike them against other objects.

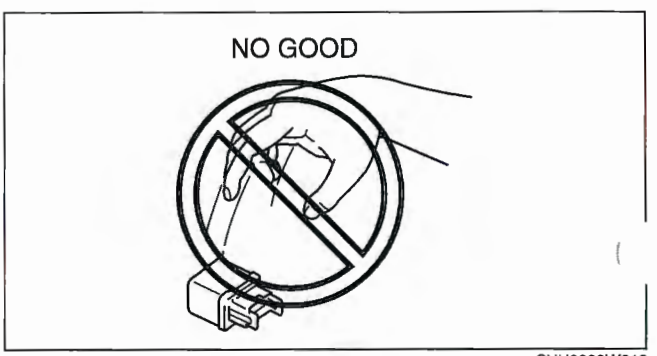

CHU0000W013

Wiring Harness

Wiring color codes

- Two-color wires are indicated by a two-color code symbol.
- The first letter indicates the base color of the wire and the second the color of the stripe.

CODE	COLOR	CODE	COLOR
B	Black	O	Orange
BR	Brown	P	Pink
G	Green	R	Red
GY	Gray	V	Violet
L	Blue	W	White
LB	Light Blue	Y	Yellow
LG	Light Green	–	–

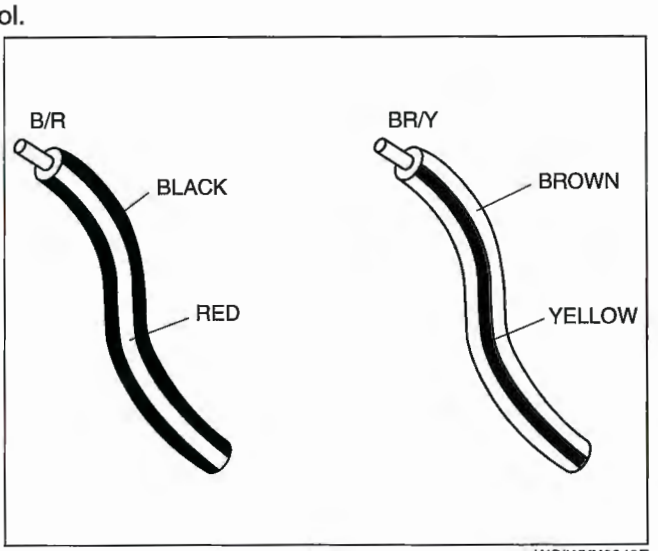

WGIWXX0048E

Fuse

Replacement

- When replacing a fuse, be sure to replace it with one of the same capacity. If a fuse fails again, the circuit probably has a short and the wiring should be inspected.
  Be sure the negative battery terminal is disconnected before replacing a main fuse.

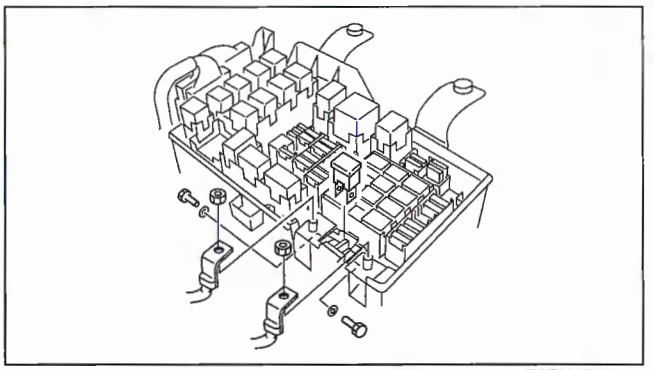

D6E000ZW4010

- When replacing a pullout fuse, use the fuse puller.

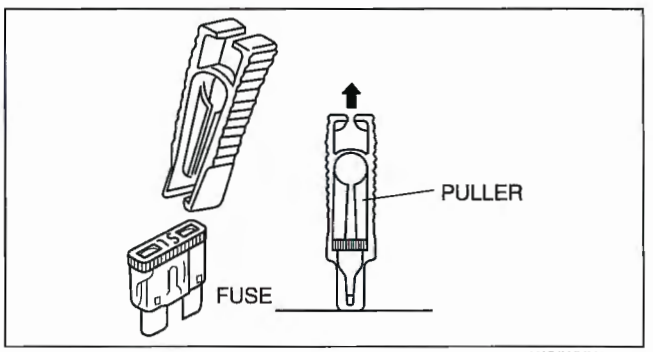

WGIWXX0050E

ection of View for Connector

- The viewing direction of connectors is indicated with a symbol.
- The figures showing the viewing direction are the same as those used in Wiring Diagrams.
- The viewing directions are shown in the following three ways:

Part-side connector

The viewing direction of part-side connectors is from the terminal side.

* : Part names are shown only when there are multiple connector drawings.

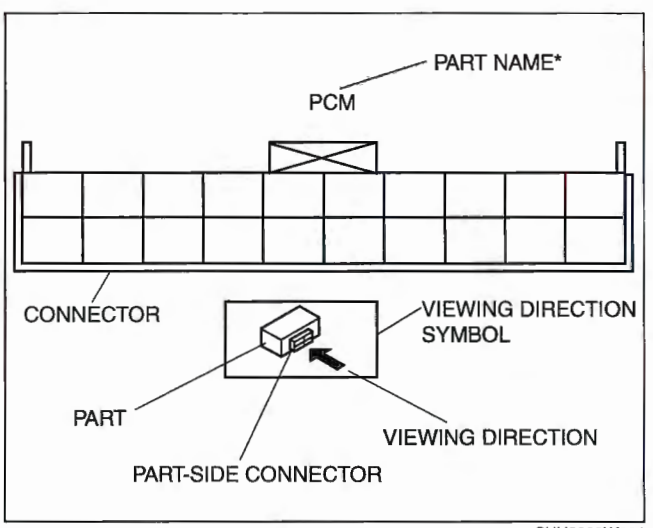

CHU0000W001

Vehicle harness-side connector

The viewing direction of vehicle harness-side connectors is from the harness side.

* : Part names are shown only when there are multiple connector drawings.

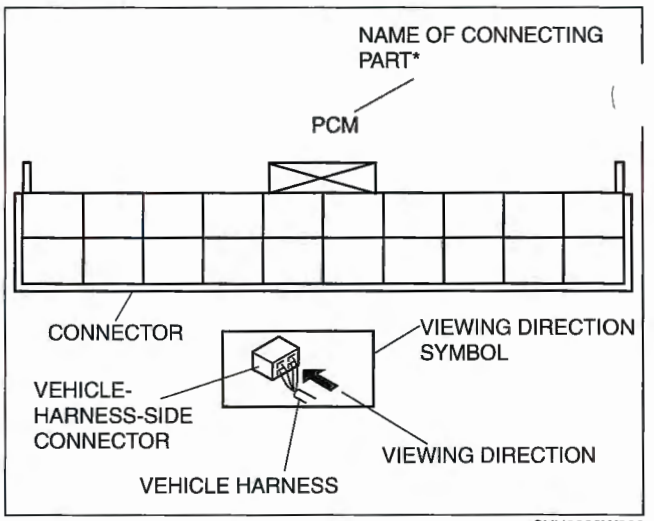

CHU0000W002

Other

When it is necessary to show the terminal side of vehicle harness-side connectors, such as the following connectors, the viewing direction is from the terminal side.

- Main fuse block and the main fuse block relays
- Data link connector
- Check connector
- Relay box

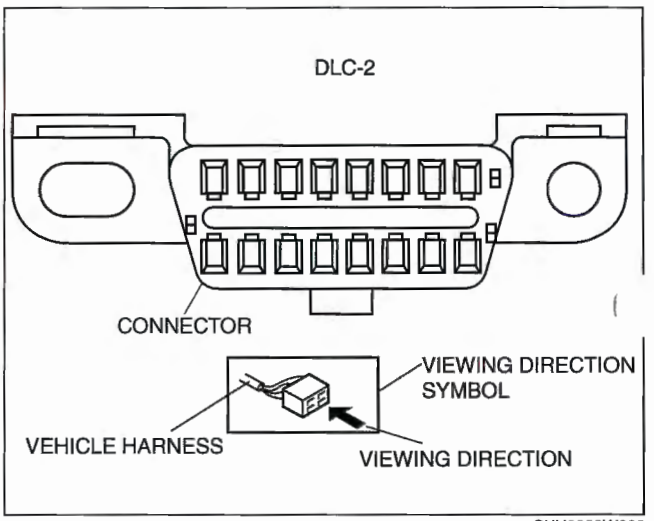

CHU0000W003

Electrical Troubleshooting Tools

Jumper wire

Caution

- **Do not connect a jumper wire from the power source line to a body ground. This may cause burning or other damage to wiring harnesses or electronic components.**

- A jumper wire is used to create a temporary circuit. Connect the jumper wire between the terminals of a circuit to bypass a switch.

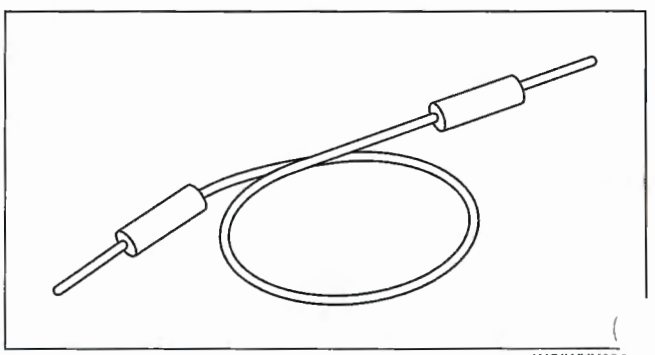

WGIWXX006

Voltmeter

- The DC voltmeter is used to measure circuit voltage. A voltmeter with a range of **15 V or more** is used by connecting the positive (+) probe (red lead wire) to the point where voltage will be measured and the negative (-) probe (black lead wire) to a body ground.

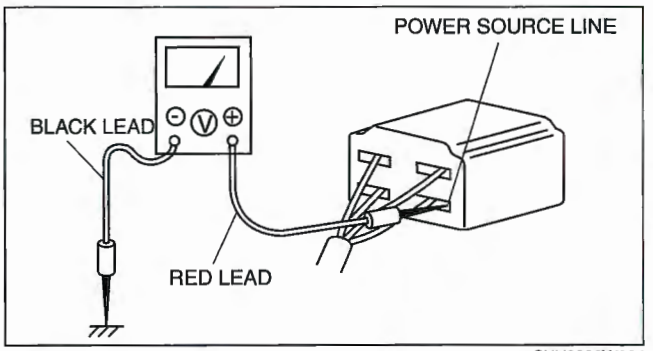

CHU0000W004

Ohmmeter

Caution

- **Do not connect the ohmmeter to any circuit where voltage is applied. This will damage the ohmmeter.**

- The ohmmeter is used to measure the resistance between two points in a circuit and to inspect for continuity and short circuits.

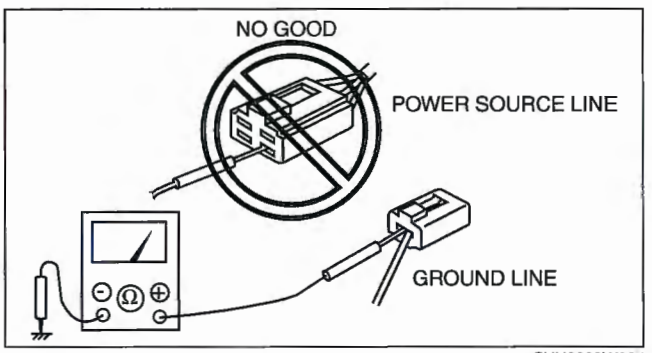

CHU0000W005

Precautions Before Welding

A vehicle has various electrical parts. To protect the parts from excessive current generated when welding, be sure to perform the following procedure.

1. Turn the ignition switch to the LOCK position.
2. Disconnect the battery cables.

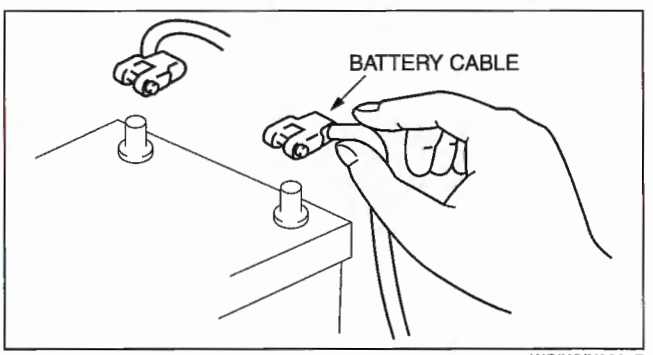

WGIWXX0007E

3. Securely connect the welding machine ground near the welding area.
4. Cover the peripheral parts of the welding area to protect them from weld spatter.

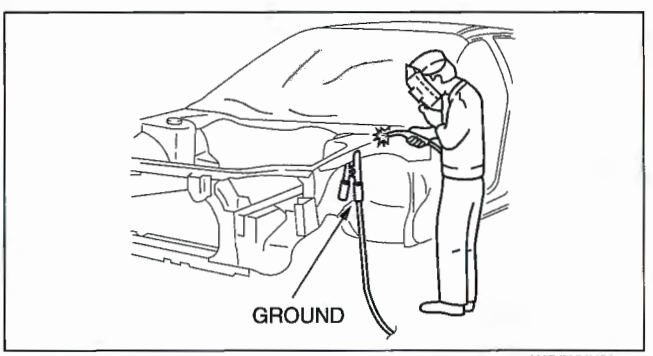

WGIWXX0008E

JACKING POSITIONS, VEHICLE LIFT (2 SUPPORTS) AND SAFETY STAND (RIGID RACK) POSITIONS

E6U000000000W09

Jacking Positions [Mazda6]

Warning

- **Improperly jacking a vehicle is dangerous. The vehicle can slip off the jack and cause serious injury. Use only the correct front and rear jacking points and block the wheels.**

- Use safety stands to support the vehicle after it has been lifted.

Front

- At the jacking plate of the front crossmember.

Rear

- At the center of torsion beam axle.

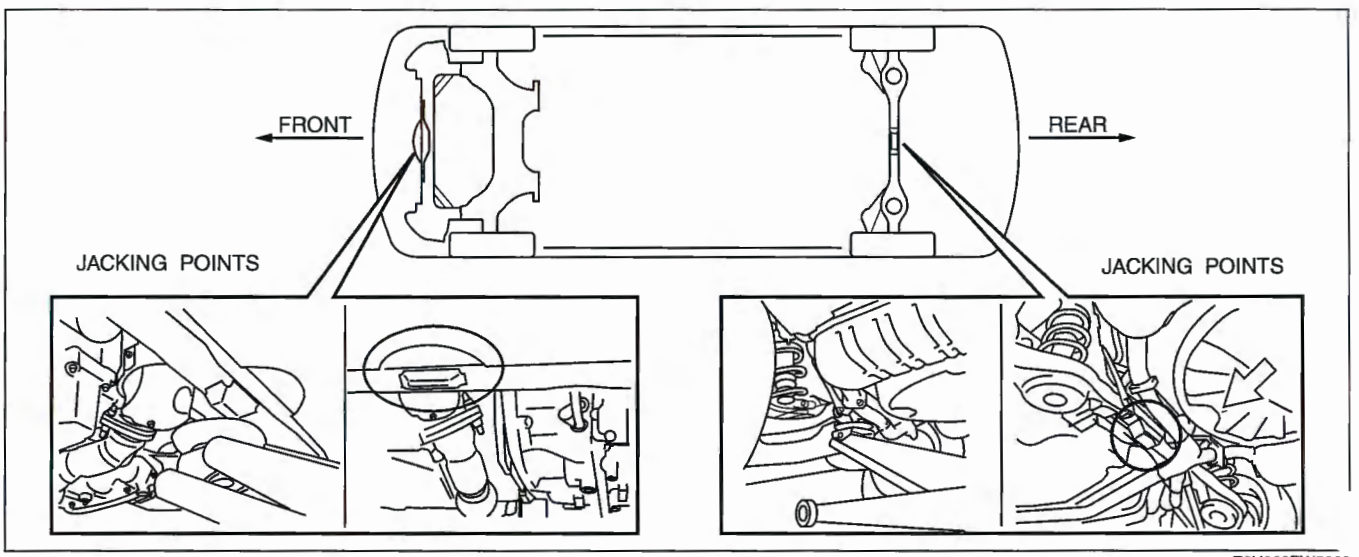

E6U000ZW5009

Jacking Positions [MAZDASPEED6]

Warning

- **Improperly jacking a vehicle is dangerous. The vehicle can slip off the jack and cause serious injury. Use only the correct front and rear jacking points and block the wheels.**

- Use safety stands to support the vehicle after it has been lifted.

Front

- At the jacking plate of the front crossmember.

Rear

- At the center of rear differential.

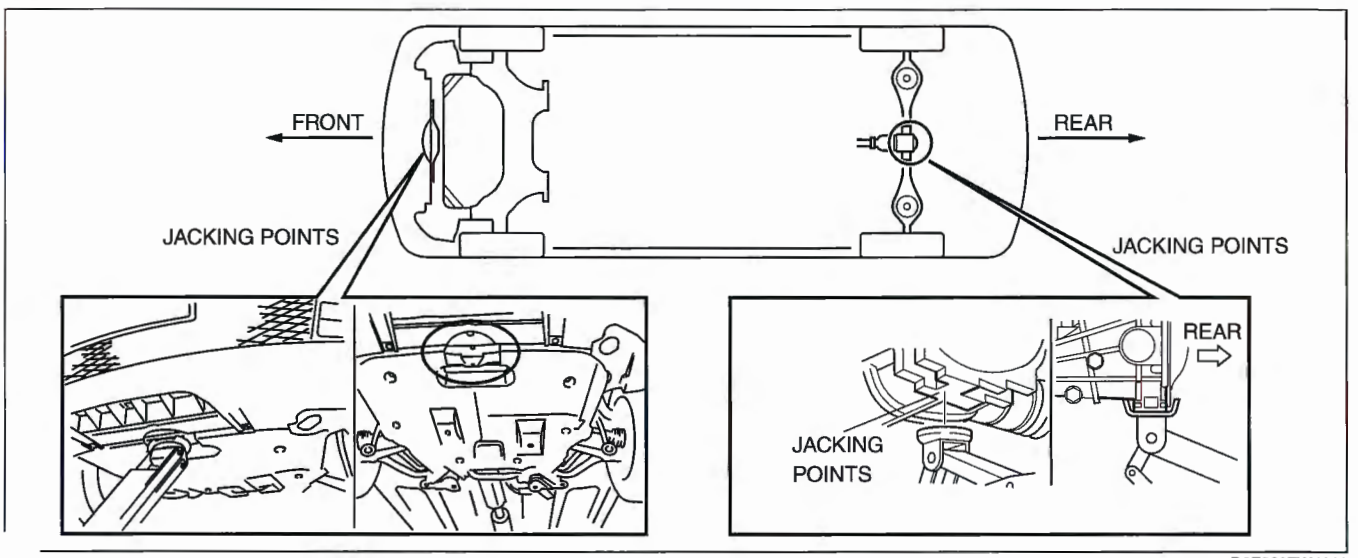

D6E000ZW4012

Vehicle Lift Positions
Front and rear

Warning

- **Unstably lifting a vehicle is dangerous. The vehicle can slip off the lift and cause serious injury and/or vehicle damage. Make sure that the vehicle is on the lift horizontally by adjusting the height of support at the end of the arm of the lift.**

- Both sides of the vehicle, on side sills.

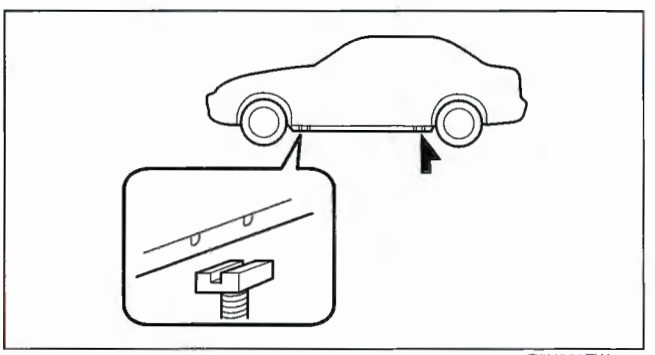

E5U000ZW5019

Safety Stand Positions
Front and rear

- Both sides of the vehicle, on side sills.

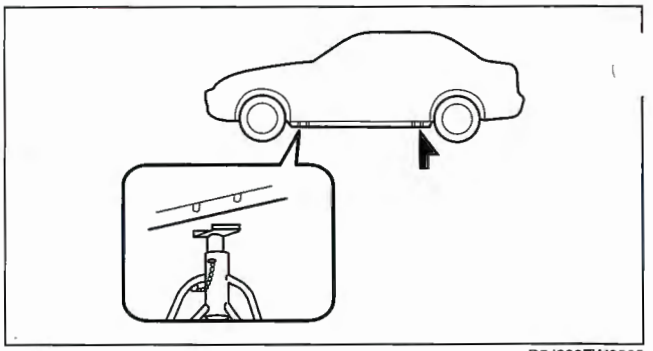

D5J000ZW6003

TOWING

E6U000000000W10

- Proper lifting and towing are necessary to prevent damage to the vehicle. State and local laws must be followed.
- A towed 2WD vehicle usually should have its front wheels off the ground. If excessive damage or other conditions prevent this, use wheel dollies.
- When towing a 2WD vehicle with the rear wheels on the ground, release the parking brake.
- A towed 4WD vehicle must have all its wheels off the ground.

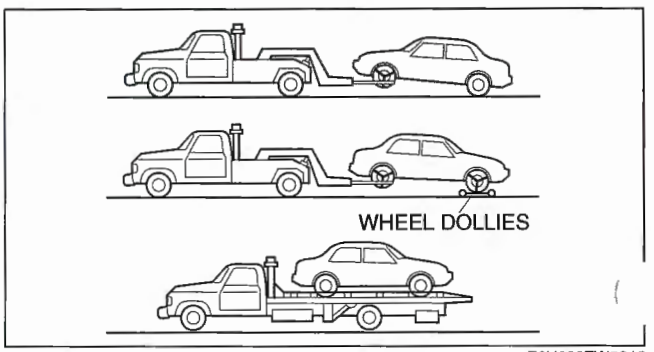

E6U000ZW5010

Towing a 2WD Vehicle

Caution

- **Do not tow with sling-type equipment. This could damage your vehicle. Use wheel-lift or flatbed equipment.**

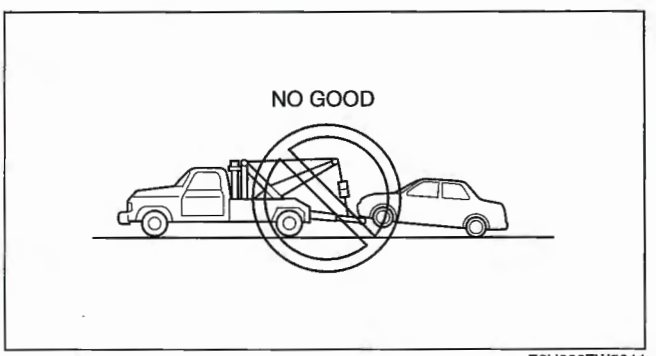

E6U000ZW5011

Caution

- **Do not tow the vehicle pointed backward with driving wheels on the ground. This may cause internal damage to the transaxle.**

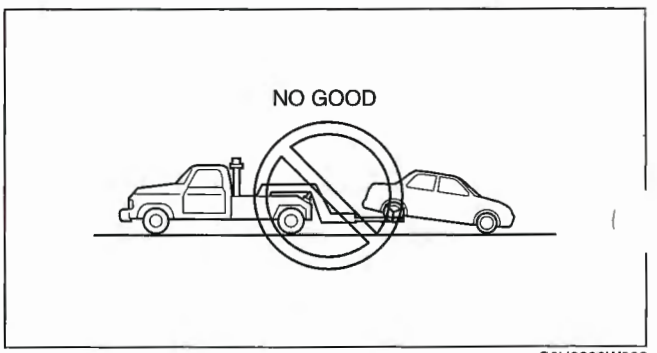

C6U0000W002

Towing a 4WD Vehicle

Warning

- **Towing a 4WD vehicle with either the front or rear wheels on the ground is dangerous as the drive train could be damaged, or the vehicle could trail away from the tow truck and cause an accident. Always tow a 4WD vehicle with all four wheels off the ground. If the drive train has been damaged, transport the vehicle on a flat bed truck.**

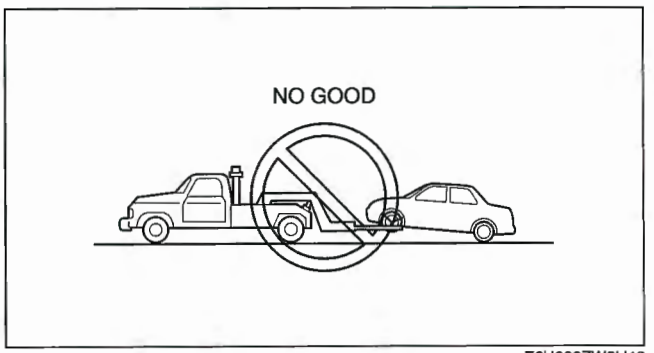

E6U000ZW6H12

TIEDOWN HOOK

E6U000000000W11

Tiedown Hook [Mazda6]

Caution

- **Do not use the hook loops under the rear bumper for towing. It is designed ONLY for tying down the vehicle when it is being transported. Using them for towing will damage the bumper.**

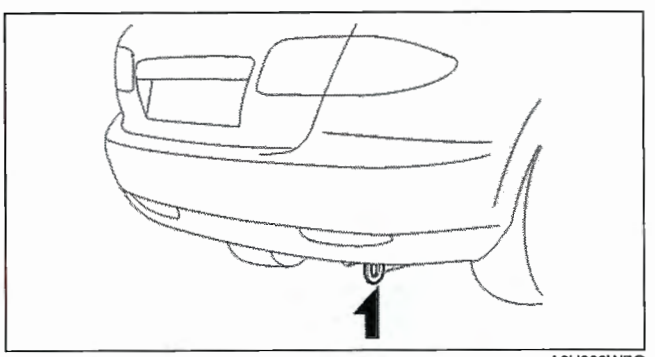

A6U000WBQ

Tiedown Hook [MAZDASPEED6]

Caution

- **Don't use the tiedown hook under the front and rear for towing. It is designed ONLY for tying down the vehicle when it's being transported. Using them for towing will damage the bumper.**
- **Either of the rear tiedown hooks (left/right) can be used.**

1. Remove the tiedown eyelet and lug wrench from the trunk.

2. Wrap a lug wrench with a soft cloth to prevent damage to the painted bumper and open the cap located on the front and rear bumper.

Caution

- **The cap cannot be completely removed. Do not use excessive force as it may damage the cap o. scratch the painted bumper surface.**

Front

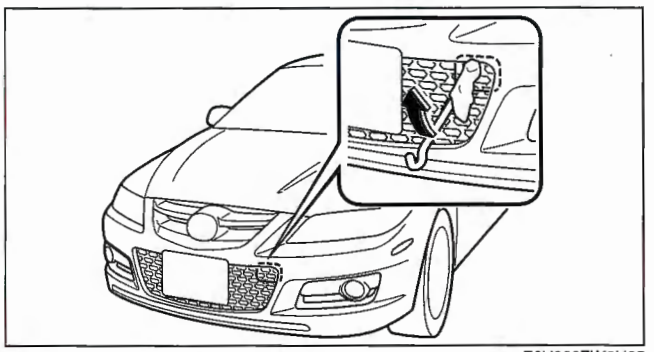

E6U000ZW6H05

Rear

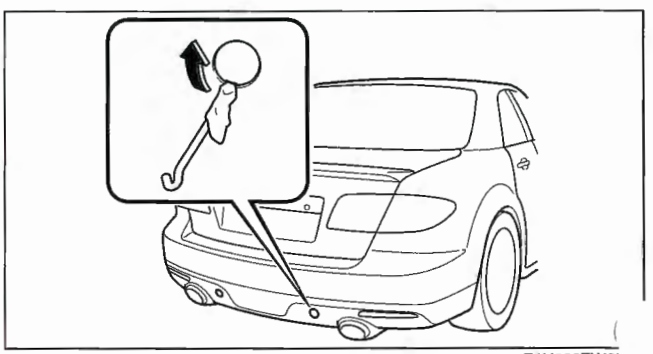

E6U000ZW6H

3. Securely install the tiedown eyelet using the lug wrench.

Front

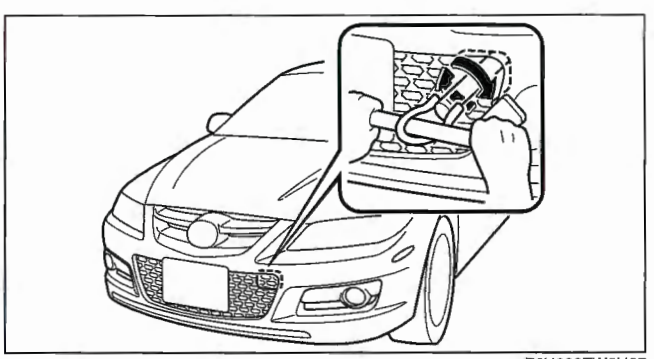

E6U000ZW6H07

Rear

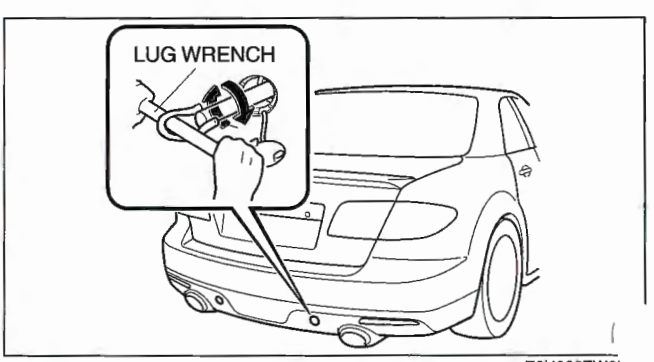

E6U000ZW6H

4. Hook the tying rope to the tiedown eyelet.

Caution

- **If the tiedown eyelet is not securely tightened, it may loosen or disengage from the bumper when tying down the vehicle. Make sure that the tiedown eyelet is securely tightened to the bumper.**

Front

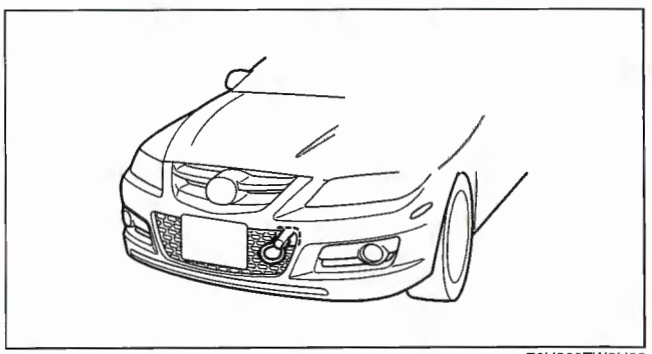

E6U000ZW6H09

Rear

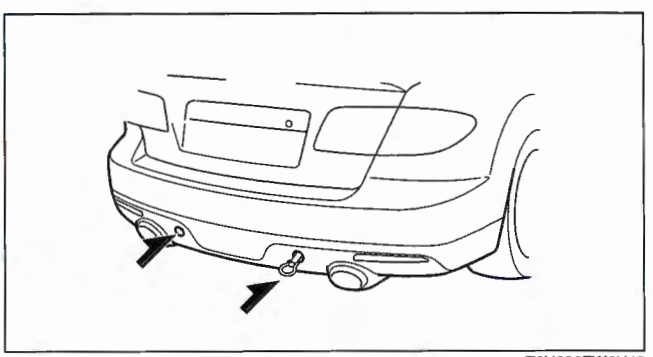

E6U000ZW6H10

IDENTIFICATION NUMBER LOCATIONS

E6U000000000W12

Vehicle Identification Number (VIN)

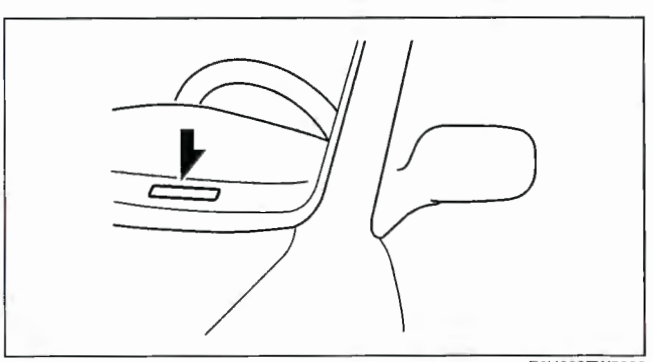

E6U000ZW5020

Engine Identification Number
L3, L3 WITH TC

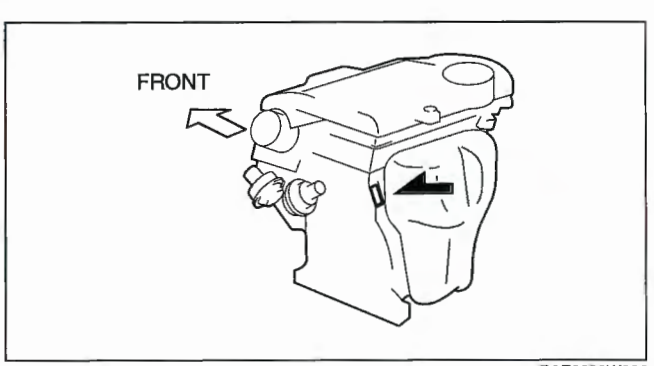

B3E0000W006

AJ

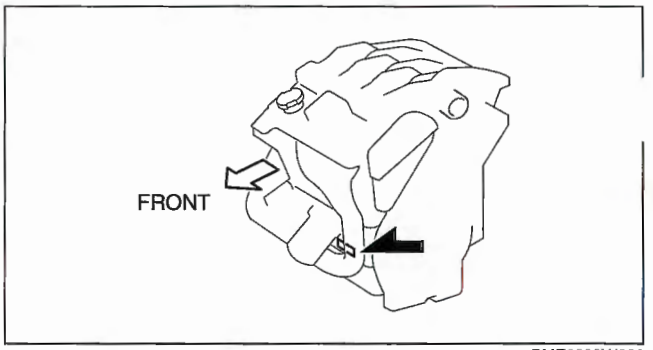

BME0000W008

SAE STANDARDS

E6U000000000W16

- In accordance with new regulations, SAE (Society of Automotive Engineers) standard names and abbreviations are now used in this manual. The table below lists the names and abbreviations that have been used in Mazda manuals up to now and their SAE equivalents.

SAE Standard		Remark		SAE Standard		Remark
Abbreviation	Name			Abbreviation	Name	
AP	Accelerator Pedal			MAP	Manifold Absolute Pressure	
APP	Accelerator Pedal Position			MAF sensor	Mass Air Flow Sensor	
ACL	Air Cleaner			MFL	Multiport Fuel Injection	
A/C	Air Conditioning			OBD	On-board Diagnostic System	
BARO	Barometric Pressure			OL	Open Loop	
B+	Battery Positive Voltage			OC	Oxidation Catalytic Converter	
CMP sensor	Camshaft Position Sensor			O2S	Oxygen sensor	
CAC	Charge Air Cooler			PNP	Park/Neutral Position	
CLS	Closed Loop System			PSP	Power Steering Pressure	
CTP	Closed Throttle Position			PCM	Powertrain Control Module	#3
CPP	Clutch Pedal Position			PAIR	Pulsed Secondary Air Injection	Pulsed injection
CIS	Continuous Fuel Injection System			AIR	Secondary Air Injection	Injection with air pump
CKP sensor	Crankshaft Position Sensor			SAPV	Secondary Air Pulse Valve	
DLC	Data Link Connector			SFI	Sequential Multiport Fuel Injection	
DTM	Diagnostic Test Mode	#1		3GR	Third Gear	
DTC	Diagnostic Test Code(s)			TWC	Three Way Catalytic Converter	
DI	Distributor Ignition			TB	Throttle Body	
DLI	Distributorless Ignition			TP sensor	Throttle Position Sensor	
EI	Electronic Ignition	#2		TCC	Torque Converter Clutch	
ECT	Engine Coolant Temperature			TCM	Transmission (Transaxle) Control Module	
EM	Engine Modification			TR	Transmission (Transaxle) Range	
EVAP	Evaporative Emission			TC	Turbocharger	
EGR	Exhaust Gas Recirculation			VSS	Vehicle Speed Sensor	
FC	Fan Control			VR	Voltage Regulator	
FF	Flexible Fuel			VAF sensor	Volume Air Flow Sensor	
4GR	Fourth Gear			WU-TWC	Warm Up Three Way Catalytic Converter	#4
GEN	Generator			WOP	Wide Open Throttle	
GND	Ground					
HO2S	Heated Oxygen Sensor	With heater				
IAC	Idle Air Control					
IAT	Intake Air Temperature					
KS	Knock Sensor					
MIL	Malfunction Indicator Lamp					

#1: Diagnostic trouble codes depend on the diagnostic test mode.
#2: Controlled by the PCM
#3: Device that controls engine and powertrain
#4: Directly connected to exhaust manifold

ABBREVIATIONS

E6U000000000W13

ABS	Antilock Brake System
ACC	Accessories
ALR	Automatic Locking Retractor
ATF	Automatic Transaxle Fluid
ATX	Automatic Transaxle
AWD	All-Wheel Drive
BCM	Body Control Module
BTDC	Before Top Dead Center
CAL	Calibration ID
CAN	Controller Area Network
CCM	Comprehensive Component Monitor
CM	Control Module
CPU	Central Processing Unit
DC	Drive Cycle
DEF	Defroster
DRL	Daytime Running Lamp
DSC	Dynamic Stability Control
EBD	Electronic Brakeforce Distribution
E/L	Electrical Load
ELR	Emergency Locking Retractor
ETC	Electronic Throttle Control
EX	Exhaust
GPS	Global Positioning System
HI	High
HU	Hydraulic Unit
HVAC	Heater, Ventilation And Air Conditioning
IDM	Injector Driver Module
IG	Ignition
IN	Intake
INT	Intermittent
KOEO	Key On Engine Off
KOER	Key On Engine Running
LCD	Liquid Crystal Display
LF	Left Front
LH	Left Hand
LO	Low
LR	Left Rear
LSD	Limited Slip Differential
M	Motor
MAX	Maximum
MIN	Minimum
MTX	Manual Transaxle
OCV	Oil Control Valve
P/S	Power Steering
PID	Parameter Identification
RAM	Random Access Memory
RF	Right Front
RH	Right Hand
ROM	Read Only Memory
RR	Right Rear
SAS	Sophisticated Air Bag Sensor
SST	Special Service Tool
SW	Switch
TCS	Traction Control System
TDC	Top Dead Center
TFT	Transaxle Fluid Temperature
TNS	Tail Number Side Lights
VAD	Variable Air Duct
VENT	Ventilation
WDS	Worldwide Diagnostic System
1GR	First Gear
2GR	Second Gear
2WD	2 Wheel Drive
3GR	Third Gear
4GR	Fourth Gear
5GR	Fifth Gear
6GR	Sixth Gear

PRE-DELIVERY INSPECTION

E6U000000000W14

Pre-Delivery Inspection Table

Exterior

INSPECT and **ADJUST**, if necessary, the following items to specification:
❑ Glass, exterior bright metal and paint for damage
❑ Wheel lug nuts
❑ All weatherstrips for damage or detachment
❑ Tire pressures
❑ Headlight cleaner and fluid level (if equipped)
❑ Operation of hood release and lock
❑ Operation of trunk lid and fuel-filler lid opener
❑ Door operation and alignment including side door and back door
❑ Headlight aiming
INSTALL the following parts:
❑ Flap (front)
❑ Wheel caps or rings (if equipped)

Under hood—engine off

INSPECT and **ADJUST**, if necessary, the following items to specification:
❑ Fuel, engine coolant, and hydraulic lines, fittings, connections, and components for leaks
❑ Engine oil level
❑ Power steering fluid level
❑ Brake and clutch fluid level
❑ Windshield washer reservoir fluid level
❑ Radiator coolant level and specific gravity
❑ Tightness of water hose clamps
❑ Tightness of battery terminals, electrolyte level and specific gravity
❑ Differential oil level

Interior

INSTALL the following items:
❑ Fuse for accessories
INSPECT the operations of the following items:
❑ Seat controls (slide and recline) and headrests
❑ Folding rear seat
❑ Door locks, including childproof door locks
❑ Seat belts and warning system
❑ Ignition switch and steering lock
❑ Transaxle range switch
❑ Warning buzzers
❑ Ignition key reminder alarm
❑ Air bag system using warning light
❑ Cruise control system (if equipped)
❑ Power door lock
❑ Shift-lock system (if equipped)
❑ Starter interlock
❑ All lights including warning, and indicator lights
❑ Horn, wipers, and washers
❑ Wiper blades performance
Clean wiper blades and windshield, if necessary
❑ Antenna
❑ Audio system
❑ Cigarette lighter and clock
❑ Power windows (if equipped)
❑ Heater, defroster, and air conditioner at various mode selections (if equipped)
INSPECT the following items:
❑ Presence of spare fuse
❑ Upholstery and interior finish
INSPECT and **ADJUST**, if necessary, the following items:
❑ Operation and fit of windows
❑ Pedal height and free play of clutch pedal
❑ Parking brake

Under hood—engine running at operating temperature
INSPECT the following items:
❑ Automatic transaxle fluid level
❑ Operation of idle-up system for electrical load, air conditioner or power steering (if equipped)
❑ Ignition timing
❑ Idle speed
❑ Operation of throttle position sensor
❑ Operation of EGR valve

On hoist
INSPECT the following items:
❑ Manual transaxle oil level
❑ Underside fuel, coolant and hydraulic lines, fittings, connections, and components for leaks
❑ Tires for cuts or bruises
❑ Steering linkage, suspension, exhaust system, and all underside hardware for looseness or damage

Road test
INSPECT the following items:
❑ Brake operation
❑ Clutch operation
❑ Steering control
❑ Operation of gauges
❑ Squeaks, rattles, and unusual noises
❑ Engine general performance
❑ Emergency locking retractors and automatic locking retractors
❑ Cruise control system (if equipped)
❑ Operation of meters and gauges, squeaks, rattles, and abnormal noises

After road test
INSPECT for necessary owner information materials, tools, and spare tire in vehicle
The following items must be completed just before delivery to your customer.
❑ Load test battery and charge if necessary (Load test result: Volts)
❑ Adjust tire pressure to specification (Specified tire pressure is indicated on the door label.)
❑ Clean outside of vehicle
❑ Install fuses for accessories
❑ Remove seat and cabin carpet protective covers
❑ Vacuum inside of vehicle

SCHEDULED MAINTENANCE

E6U000000000W15

Scheduled Maintenance Table for U.S.A., CANADA, and Puerto Rico [Mazda6]

Schedule 1: Normal driving conditions (U.S.A. only)

- The vehicle is mainly operated where none of the "unique driving conditions" apply.
- For CANADA and Puerto Rico, follow schedule 2.

Maintenance Interval		Number of months or kilometers (miles), whichever comes first							
	Months	6	12	18	24	30	36	42	48
	× 1000 km	12	24	36	48	60	72	84	96
	× 1000 miles	7.5	15	22.5	30	37.5	45	52.5	60
ENGINE									
Drive belts (tension)	L3 engine model					I			
	AJ engine model				I				I
Engine valve clearance (for L3 engine)		Audible inspect every 120,000 km (75,000 miles), if noisy, adjust							
Engine oil		R	R	R	R	R	R	R	R
Engine oil filter		R	R	R	R	R	R	R	R
COOLING SYSTEM									
Cooling system					I				I
Engine coolant	FL22 type *1	Replace at first 192,000 km (120,000 miles) or 10 years; after that, every 96,000 km (60,000 miles) or 5 years							
	Others	Replace at first 168,000 km (105,000 miles) or 5 years; after that, every 48,000 km (30,000 miles) or 2 years							
FUEL SYSTEM									
Air cleaner element						R			
Fuel lines and hoses *2					I				I
Hoses and tubes for emission *2									I
IGNITION SYSTEM									
Spark plugs		Replace every 120,000 km (75,000 miles)							
CHASSIS and BODY									
Brake lines, hoses and connections					I				I
Disc brakes			I		I		I		I
Tire (Rotation)		Rotate every 12,000 km (7,500 miles)							
Steering operation and linkages					I				I
Front and rear suspension and ball joints					I				I
Drive shaft dust boots					I				I
Exhaust system and heat shields		Inspect every 72,000 km (45,000 miles) or 5 years							
All locks and hinges		L	L	L	L	L	L	L	L
AIR CONDITIONER SYSTEM (if installed)									
Cabin air filter		Replace every 40,000 km (25,000 miles) or 2 years							

Chart symbols:

I: Inspect and repair, clean, adjust, or replace if necessary.
R: Replace
L: Lubricate

Remarks

- After the prescribed period, continue to follow the described maintenance at the recommended intervals.
- Refer below for a description of items marked* in the maintenance chart.

*1: Use FL22 type coolant in vehicles with the inscription "FL22" on the radiator cap itself or the surrounding area. Use FL22 when replacing the coolant.

*2: According to state/provincial and federal regulations, failure to perform maintenance on these items will not void your emissions warranties. However, Mazda recommends that all maintenance services be performed at the recommended time or mileage/kilometer period to ensure long-term reliability.

Schedule 2: Unique driving conditions (for U.S.A. unique conditions and CANADA/Puerto Rico all conditions)

- Repeated short-distance driving
  Driving in dusty conditions
  Driving with extended use of brakes
- Driving in areas where salt or other corrosive materials are used
- Driving on rough or muddy roads
- Extended periods of idling or low-speed operation
- Driving for long periods in cold temperatures or extremely humid climates

Maintenance Interval		Number of months or kilometers (miles), whichever comes first											
	Months	4	8	12	16	20	24	28	32	36	40	44	48
	× 1000 km	8	16	24	32	40	48	56	64	72	80	88	96
	× 1000 miles	5	10	15	20	25	30	35	40	45	50	55	60
ENGINE													
Drive belts (tension)	L3 engine model							I					
	AJ engine model						I						I
Engine valve clearance (for L3 engine)		Audible inspect every 120,000 km (75,000 miles), if noisy, adjust											
Engine oil	Puerto Rico	Replace every 5,000 km (3,000 miles) or 3 months											
	Others	R	R	R	R	R	R	R	R	R	R	R	R
Engine oil filter		R	R	R	R	R	R	R	R	R	R	R	R
COOLING SYSTEM													
Cooling system							I						I
Engine coolant	FL22 type *1	Replace at first 192,000 km (120,000 miles) or 10 years; after that, every 96,000 km (60,000 miles) or 5 years											
	Others	Replace at first 168,000 km (105,000 miles) or 5 years; after that, every 48,000 km (30,000 miles) or 2 years											
Engine coolant level		I	I	I	I	I	I	I	I	I	I	I	I
EL SYSTEM													
Air cleaner element	Puerto Rico						R						R
	Others							R					
Fuel lines and hoses *2							I						I
Hoses and tubes for emission *2													I
IGNITION SYSTEM													
Spark plugs	U.S.A.	Replace every 96,000 km (60,000 miles)											
	Others *3	Replace every 120,000 km (75,000 miles)											
ELECTRICAL SYSTEM													
Function of all lights		I	I	I	I	I	I	I	I	I	I	I	I
CHASSIS and BODY													
Brake lines, hoses and connections							I						I
Brake fluid level		I	I	I	I	I	I	I	I	I	I	I	I
Disc brakes				I			I			I			I
Tire (Rotation)		Rotate every 8,000 km (5,000 miles)											
Tire inflation pressure and tire wear		I	I	I	I	I	I	I	I	I	I	I	I
Steering operation and linkages							I						I
Power steering fluid level		I	I	I	I	I	I	I	I	I	I	I	I
Front and rear suspension and ball joints							I						I
Drive shaft dust boots							I						I
Exhaust system and heat shields		Inspect every 72,000 km (45,000 miles) or 5 years											
All locks and hinges		L	L	L	L	L	L	L	L	L	L	L	L
Washer fluid level		I	I	I	I	I	I	I	I	I	I	I	I
R CONDITIONER SYSTEM (if installed)													
Cabin air filter		Replace every 40,000 km (25,000 miles) or 2 years											

Chart symbols:
I: Inspect and repair, clean, adjust, or replace if necessary.
R: Replace
L: Lubricate
Remarks

- After the prescribed period, continue to follow the described maintenance at the recommended intervals.
- Refer below for a description of items marked* in the maintenance chart.
  *1: Use FL22 type coolant in vehicles with the inscription "FL22" on the radiator cap itself or the surrounding area. Use FL22 when replacing the coolant.
  *2: According to state/provincial and federal regulations, failure to perform maintenance on these items will not void your emissions warranties. However, Mazda recommends that all maintenance services be performed at the recommended time or mileage/kilometer period to ensure long-term reliability.
  *3: If the vehicle is operated under any of the following conditions, change the spark plugs every 96,000 km (60,000 miles) or shorter.
  a. Repeated short-distance driving
  b. Extended periods of idling or low-speed operation
  c. Driving for long periods in cold temperatures or extremely humid climates

Scheduled Maintenance Table for U.S.A., CANADA, and Puerto Rico [MAZDASPEED6]
Schedule 1: Normal driving conditions (U.S.A. only)

- The vehicle is mainly operated where none of the "unique driving conditions" apply.
- For CANADA and Puerto Rico, follow schedule 2.

Maintenance Interval		Number of months or kilometers (miles), whichever comes first							
	Months	6	12	18	24	30	36	42	48
	× 1000 km	12	24	36	48	60	72	84	96
	× 1000 miles	7.5	15	22.5	30	37.5	45	52.5	60
ENGINE									
Engine valve clearance		Audible inspect every 120,000 km (75,000 miles), if noisy, adjust							
Drive belts (tension)						I			
Engine oil		R	R	R	R	R	R	R	R
Engine oil filter		R	R	R	R	R	R	R	R
COOLING SYSTEM									
Cooling system					I				I
Engine coolant	FL22 type*1	Replace at first 192,000 km (120,000 miles) or 10 years; after that, every 96,000 km (60,000 miles) or 5 years							
	Others	Replace at first 96,000 km (60,000 miles) or 4years; after that, every 2 years							
FUEL SYSTEM									
Air cleaner element						R			
Fuel lines and hoses*2					I				I
Hoses and tubes for emission*2									I
IGNITION SYSTEM									
Spark plugs		Replace every 72,000 km (45,000 miles)							
CHASSIS and BODY									
Brake lines, hoses and connections					I				I
Disc brakes			I		I		I		I
Tire (Rotation)		Rotate every 12,000 km (7,500 miles)							
Steering operation and linkages					I				I
Front and rear suspension and ball joints					I				I
Rear differential oil		*3*4							
Transfer oil		*4							
Drive shaft dust boots					I				I
Exhaust system and heat shields		Inspect every 72,000 km (45,000 miles) or 5 years							
All locks and hinges		L	L	L	L	L	L	L	L
AIR CONDITIONER SYSTEM (if equipped)									
Cabin air filter		Replace every 40,000 km (25,000 miles) or 2 years							

Chart symbols:
I: Inspect and repair, clean, adjust, or replace if necessary.
R: Replace
L: Lubricate

narks

- After the prescribed period, continue to follow the described maintenance at the recommended intervals.
- Refer below for a description of items marked* in the maintenance chart.

*1: Use FL22 type coolant in vehicles with the inscription "FL22" on the radiator cap itself or the surrounding area. Use FL22 when replacing the coolant.

*2: According to state/provincial and federal regulations, failure to perform maintenance on these items will not void your emissions warranties. However, Mazda recommends that all maintenance services be performed at the recommended time or mileage period to ensure long-term reliability.

*3: If the vehicle is operated under any of the following conditions, change the rear differential oil every 45,000 km (28,100 miles).
a) Towing a trailer or using a car-top carrier
b) Driving in dusty, sandy or wet condition
c) Extended periods of idling or low speed operation
d) Repeated short trips of less than 16 km (10 miles)

*4: If this component has been submerged in water, the oil should be changed.

Schedule 2: Unique driving conditions (for U.S.A. unique conditions and CANADA/Puerto Rico all conditions)

- Repeated short-distance driving
- Driving in dusty conditions
- Driving with extended use of brakes
- Driving in areas where salt or other corrosive materials are used
- Driving on rough or muddy roads
- Extended periods of idling or low-speed operation
- Driving for long periods in cold temperatures or extremely humid climates

Maintenance Interval		Number of months or kilometers (miles), whichever comes first											
	Months	4	8	12	16	20	24	28	32	36	40	44	48
	× 1000 km	8	16	24	32	40	48	56	64	72	80	88	96
	× 1000 miles	5	10	15	20	25	30	35	40	45	50	55	60
ENGINE													
Engine valve clearance		Audible inspect every 120,000 km (75,000 miles), if noisy, adjust											
Drive belts (tension)								I					
Engine oil	Puerto Rico	Replace every 5,000 km (3,000 miles) or 3 months											
	Others	R	R	R	R	R	R	R	R	R	R	R	R
Engine oil filter		R	R	R	R	R	R	R	R	R	R	R	R
COOLING SYSTEM													
Cooling system							I						I
Engine coolant	FL22 type*1	Replace at first 192,000 km (120,000 miles) or 10 years; after that, every 96,000 km (60,000 miles) or 5 years											
	Others	Replace at first 96,000 km (60,000 miles) or 4 years; after that, every 2 years											
Engine coolant level		I	I	I	I	I	I	I	I	I	I	I	I
FUEL SYSTEM													
Air cleaner element	Puerto Rico						R						R
	Others							R					
Fuel lines and hoses *2							I						I
Hoses and tubes for emission*2													I
IGNITION SYSTEM													
Spark plugs *3		Replace every 72,000 km (45,000 miles)											
ELECTRICAL SYSTEM													
Function of all lights		I	I	I	I	I	I	I	I	I	I	I	I
CHASSIS and BODY													
Brake lines, hoses and connections							I						I
Brake and clutch fluid level		I	I	I	I	I	I	I	I	I	I	I	I
Disc brakes				I			I			I			I

Maintenance Interval	Number of months or kilometers (miles), whichever comes first											
	Months	4	8	12	16	20	24	28	32	36	40	44	48
	× 1000 km	8	16	24	32	40	48	56	64	72	80	88	96
	× 1000 miles	5	10	15	20	25	30	35	40	45	50	55	6
Tire (Rotation)	Rotate every 8,000 km (5,000 miles)											
Tire inflation pressure and tire wear	I	I	I	I	I	I	I	I	I	I	I	I
Steering operation and linkages						I						I
Power steering fluid level	I	I	I	I	I	I	I	I	I	I	I	I
Front and rear suspension and ball joints						I						I
Rear differential oil	*4*5											
Transfer oil	*5											
Drive shaft dust boots						I						I
Exhaust system and heat shields	Inspect every 72,000 km (45,000 miles) or 5 years											
All locks and hinges	L	L	L	L	L	L	L	L	L	L	L	L
Washer fluid level	I	I	I	I	I	I	I	I	I	I	I	I
AIR CONDITIONER SYSTEM (if equipped)												
Cabin air filter	Replace every 40,000 km (25,000 miles) or 2 years											

Chart symbols:
I: Inspect and repair, clean, adjust, or replace if necessary.
R: Replace
L: Lubricate

Remarks

- After the prescribed period, continue to follow the described maintenance at the recommended intervals.
- Refer below for a description of items marked* in the maintenance chart.

*1: Use FL22 type coolant in vehicles with the inscription "FL22" on the radiator cap itself or the surrounding area. Use FL22 when replacing the coolant.

*2: According to state/provincial and federal regulations, failure to perform maintenance on these items will not void your emissions warranties. However, Mazda recommends that all maintenance services be performed at the recommended time or mileage period to ensure long-term reliability.

*3: If the vehicle is operated under any of the following conditions, change the spark plugs every 72,000 km (45,000 miles) or shorter.
a) Repeated short-distance driving
b) Extended periods of idling or low-speed operation
c) Driving for long periods in cold temperatures or extremely humid climates

*4: If the vehicle is operated under any of the following conditions, change the rear differential oil every 45,000 km (28,100 miles).
a) Towing a trailer or using a car-top carrier
b) Driving in dusty, sandy or wet condition
c) Extended periods of idling or low speed operation
d) Repeated short trips of less than 16 km (10 miles)

*5: If this component has been submerged in water, the oil should be changed.

Scheduled Maintenance Table for Mexico [Mazda6]
Schedule 1: Normal driving conditions

- The vehicle is mainly operated where none of the "unique driving conditions" apply.

Maintenance Interval		Number of months or kilometers, whichever comes first											
	Months	6	12	18	24	30	36	42	48	54	60	66	72
	× 1000 km	10	20	30	40	50	60	70	80	90	100	110	120
ENGINE													
Drive belts (tension)					I				I				I
Engine valve clearance (for L3 engine)		Audible inspect every 120,000 km, if noisy, adjust											
Engine oil		R	R	R	R	R	R	R	R	R	R	R	R
Engine oil filter		R	R	R	R	R	R	R	R	R	R	R	R
COOLING SYSTEM													
Cooling system					I				I				I
Engine coolant	FL22 type *1	Replace at first 190,000 km or 10 years; after that, every 60,000 km or 3 years											
	Others	Replace every 40,000 km or 2 years											
FUEL SYSTEM													
Air cleaner element			R		R		R		R		R		R
Fuel lines and hoses					I *2				I *2				I
Hoses and tubes for emission					I *2				I *2				I
Fuel filter					R				R				R
IGNITION SYSTEM													
Spark plugs		Replace every 60,000 km											
CHASSIS and BODY													
Brake lines, hoses and connections			I		I		I		I		I		I
Brake fluid level		I	I	I		I	I	I		I	I	I	
Brake fluid					R				R				R
Disc brakes		I	I	I	I	I	I	I	I	I	I	I	I
e (Rotation)		Rotate every 10,000 km or 6 months											
Tire inflation pressure and tire wear		I	I	I	I	I	I	I	I	I	I	I	I
Steering operation and linkages		I	I	I	I	I	I	I	I	I	I	I	I
Power steering fluid level		I	I	I	I	I	I	I	I	I	I	I	I
Front and rear suspension and ball joints		I	I	I	I	I	I	I	I	I	I	I	I
Drive shaft dust boots			I		I		I		I		I		I
Exhaust system and heat shields			I		I		I		I		I		I
All locks and hinges		L	L	L	L	L	L	L	L	L	L	L	L
Washer fluid level		I	I	I	I	I	I	I	I	I	I	I	I
AIR CONDITIONER SYSTEM (if installed)													
Cabin air filter					R				R				R

Chart symbols:
I: Inspect and repair, clean, adjust, or replace if necessary.
R: Replace
L: Lubricate

Remarks

- After the prescribed period, continue to follow the described maintenance at the recommended intervals.
- Refer below for a description of items marked* in the maintenance chart.
  *1: Use FL22 type coolant in vehicles with the inscription "FL22" on the radiator cap itself or the surrounding area. Use FL22 when replacing the coolant.
  *2: According to state/provincial and federal regulations, failure to perform maintenance on these items will not void your emissions warranties. However, Mazda recommends that all maintenance services be performed at the recommended time or mileage/kilometer period to ensure long-term reliability.

Schedule 2: Unique driving conditions

- Repeated short-distance driving
- Driving in dusty conditions
- Driving with extended use of brakes
- Driving in areas where salt or other corrosive materials are used
- Driving on rough or muddy roads
- Extended periods of idling or low-speed operation
- Driving for long periods in cold temperatures or extremely humid climates

Maintenance Interval		Number of months or kilometers, whichever comes first											
	Months	3	6	9	12	15	18	21	24	27	30	33	36
	× 1000 km	5	10	15	20	25	30	35	40	45	50	55	60
ENGINE													
Drive belts (tension)									I				
Engine valve clearance (for L3 engine)		Audible inspect every 120,000 km, if noisy, adjust											
Engine oil		R	R	R	R	R	R	R	R	R	R	R	R
Engine oil filter		R	R	R	R	R	R	R	R	R	R	R	R
COOLING SYSTEM													
Cooling system									I				
Engine coolant	FL22 type *1	Replace at first 190,000 km or 10 years; after that, every 60,000 km or 3 years											
	Others	Replace every 40,000 km or 2 years											
Engine coolant level		I	I	I	I	I	I	I	I	I	I	I	I
FUEL SYSTEM													
Air cleaner element			C		R		C		R		C		R
Fuel lines and hoses									I *2				
Hoses and tubes for emission									I *2				
Fuel filter									R				
IGNITION SYSTEM													
Spark plugs		Replace every 60,000 km											
ELECTRICAL SYSTEM													
Function of all lights		I	I	I	I	I	I	I	I	I	I	I	I
CHASSIS and BODY													
Brake lines, hoses and connections					I				I				I
Brake fluid level			I		I		I				I		I
Brake fluid									R				
Disc brakes			I		I		I		I		I		I
Tire (Rotation)		Rotate every 10,000 km or 6 months											
Tire inflation pressure and tire wear			I		I		I		I		I		I
Steering operation and linkages			I		I		I		I		I		I
Power steering fluid level			I		I		I		I		I		I
Front and rear suspension and ball joints			I		I		I		I		I		I
Drive shaft dust boots					I				I				I
Exhaust system and heat shields					I				I				I
All locks and hinges			L		L		L		L		L		L
Washer fluid level			I		I		I		I		I		I
AIR CONDITIONER SYSTEM (if installed)													
Cabin air filter					R				R				R

Cont.

Maintenance Interval		Number of months or kilometers, whichever comes first											
	Months	39	42	45	48	51	54	57	60	63	66	69	72
	× 1000 km	65	70	75	80	85	90	95	100	105	110	115	120
ENGINE													
Drive belts (tension)					I								I
Engine valve clearance (for L3 engine)		Audible inspect every 120,000 km, if noisy, adjust											
Engine oil		R	R	R	R	R	R	R	R	R	R	R	R
Engine oil filter		R	R	R	R	R	R	R	R	R	R	R	R
COOLING SYSTEM													
Cooling system					I								I
Engine coolant	FL22 type *1	Replace at first 190,000 km or 10 years; after that, every 60,000 km or 3 years											
	Others	Replace every 40,000 km or 2 years											
Engine coolant level		I	I	I	I	I	I	I	I	I	I	I	I
FUEL SYSTEM													
Air cleaner element			C		R		C		R		C		R
Fuel lines and hoses					I *2								I
Hoses and tubes for emission					I *2								I
Fuel filter					R								R
IGNITION SYSTEM													
Spark plugs		Replace every 60,000 km											
ELECTRICAL SYSTEM													
Function of all lights		I	I	I	I	I	I	I	I	I	I	I	I
CHASSIS and BODY													
Brake lines, hoses and connections					I				I				I
Brake fluid level			I				I		I		I		
Brake fluid					R								R
Disc brakes			I		I		I		I		I		I
Tire (Rotation)		Rotate every 10,000 km or 6 months											
Tire inflation pressure and tire wear			I		I		I		I		I		I
Steering operation and linkages			I		I		I		I		I		I
Power steering fluid level			I		I		I		I		I		I
Front and rear suspension and ball joints			I		I		I		I		I		I
Drive shaft dust boots					I				I				I
Exhaust system and heat shields					I				I				I
All locks and hinges			L		L		L		L		L		L
Washer fluid level			I		I		I		I		I		I
AIR CONDITIONER SYSTEM (if installed)													
Cabin air filter					R				R				R

Chart symbols:
I: Inspect and repair, clean, adjust, or replace if necessary.
R: Replace
L: Lubricate
C: Clean

Remarks

- After the prescribed period, continue to follow the described maintenance at the recommended intervals.
- Refer below for a description of items marked* in the maintenance chart.

*1: Use FL22 type coolant in vehicles with the inscription "FL22" on the radiator cap itself or the surrounding area. Use FL22 when replacing the coolant.

*2: According to state/provincial and federal regulations, failure to perform maintenance on these items will not void your emissions warranties. However, Mazda recommends that all maintenance services be performed at the recommended time or mileage/kilometer period to ensure long-term reliability.

ENGINE

01
SECTION

ON-BOARD DIAGNOSTIC [ENGINE CONTROL SYSTEM (L3)] 01-02A
ON-BOARD DIAGNOSTIC [ENGINE CONTROL SYSTEM (L3 WITH TC)] 01-02B
ON-BOARD DIAGNOSTIC [ENGINE CONTROL SYSTEM (AJ)] 01-02C
SYMPTOM TROUBLESHOOTING [ENGINE CONTROL SYSTEM (L3)] 01-03A
SYMPTOM TROUBLESHOOTING [ENGINE CONTROL SYSTEM (L3 WITH TC)] 01-03B
SYMPTOM TROUBLESHOOTING [ENGINE CONTROL SYSTEM (AJ)] 01-03C
MECHANICAL [L3] 01-10A
MECHANICAL [L3 WITH TC] 01-10B
MECHANICAL [AJ] 01-10C
LUBRICATION [L3,AJ] 01-11A
LUBRICATION [L3 WITH TC] 01-11B
COOLING SYSTEM [L3,AJ] . . . 01-12A
COOLING SYSTEM [L3 WITH TC] 01-12B
INTAKE-AIR SYSTEM [L3] 01-13A
INTAKE-AIR SYSTEM [L3 WITH TC] 01-13B
INTAKE-AIR SYSTEM[AJ] 01-13C
FUEL SYSTEM [L3,AJ] 01-14A
FUEL SYSTEM [L3 WITH TC] 01-14B
EXHAUST SYSTEM [L3] 01-15A
EXHAUST SYSTEM [L3 WITH TC] 01-15B
EXHAUST SYSTEM [AJ] 01-15C
EMISSION SYSTEM [L3,AJ] 01-16A
EMISSION SYSTEM [L3 WITH TC] 01-16B
CHARGING SYSTEM [L3,AJ] 01-17A
CHARGING SYSTEM [L3 WITH TC] 01-17B
IGNITION SYSTEM [L3,AJ] 01-18A
IGNITION SYSTEM [L3 WITH TC] 01-18B
STARTING SYSTEM [L3,AJ] 01-19A
STARTING SYSTEM [L3 WITH TC] 01-19B
CRUISE CONTROL SYSTEM [L3,AJ] 01-20A
CRUISE CONTROL SYSTEM [L3 WITH TC] 01-20B
CONTROL SYSTEM [L3] 01-40A
CONTROL SYSTEM [L3 WITH TC] 01-40B
CONTROL SYSTEM [AJ] 01-40C
TECHNICAL DATA [L3,AJ] . . . 01-50A
TECHNICAL DATA [L3 WITH TC] 01-50B
SERVICE TOOLS [L3,AJ] 01-60A
SERVICE TOOLS [L3 WITH TC] 01-60B

01–02A ON-BOARD DIAGNOSTIC [ENGINE CONTROL SYSTEM (L3)]

ON-BOARD DIAGNOSTIC WIRING DIAGRAM [L3] 01–02A–4
California Emission Regulation Applicable ATX Model 01–02A–4

Except for California Emission Regulation Applicable ATX Model 01–02A–6
MONITORING SYSTEM AND CONTROL SYSTEM DEVICE RELATIONSHIP CHART [L3] 01–02A–8
FOREWORD [L3] 01–02A–10
OBD-II PENDING TROUBLE CODE [L3] 01–02A–10
OBD-II FREEZE FRAME DATA [L3] 01–02A–10
OBD-II ON-BOARD SYSTEM READINESS TEST [L3] 01–02A–10
OBD-II DIAGNOSTIC MONITORING TEST RESULTS [L3] 01–02A–10
OBD-II READ/CLEAR DIAGNOSTIC TEST RESULTS [L3] 01–02A–10
OBD-II PARAMETER IDENTIFICATION (PID) ACCESS [L3] 01–02A–11
ON-BOARD DIAGNOSTIC TEST [L3] 01–02A–11
DTCs Reading Procedure 01–02A–11
Pending Trouble Code Access Procedure 01–02A–11
Freeze Frame PID Data Access Procedure 01–02A–11
On-Board System Readiness Tests Access Procedure 01–02A–12
PID/DATA Monitor and Record Procedure 01–02A–12
Diagnostic Monitoring Test Results Access Procedure 01–02A–12
AFTER REPAIR PROCEDURE [L3] ... 01–02A–12
KOEO/KOER SELF TEST [L3] 01–02A–12
OBD-II DRIVE MODE [L3] 01–02A–13
PCM Adaptive Memory Production Drive Mode 01–02A–14
EGR System Repair Verification Drive Mode 01–02A–14
HO2S heater, HO2S, and TWC Repair Verification Drive Mode 01–02A–15
EVAP System Repair Verification Drive Mode 01–02A–15
PCM Adaptive Memory Production, EGR, HO2S heater, HO2S, TWC, and EVAP System Repair Verification Drive Mode 01–02A–16
DIAGNOSTIC MONITORING TEST RESULTS [L3] 01–02A–17
DTC TABLE [L3] 01–02A–18
DTC B1342 [L3] 01–02A–25
DTC P0011 [L3] 01–02A–26
DTC P0012 [L3] 01–02A–28
DTC P0016 [L3] 01–02A–30
DTC P0030 [L3] 01–02A–32
California Emission Regulation Applicable ATX Model 01–02A–32
Except for California Emission Regulation Applicable ATX Model ... 01–02A–33
DTC P0031 [L3] 01–02A–36
California Emission Regulation Applicable ATX Model 01–02A–36
Except for California Emission Regulation Applicable ATX Model 01–02A–38
DTC P0032 [L3] 01–02A–40
California Emission Regulation Applicable ATX Model 01–02A–40
Except for California Emission Regulation Applicable ATX Model .. 01–02A–42
DTC P0037 [L3] 01–02A–44
California Emission Regulation Applicable ATX Model 01–02A–44
Except for California Emission Regulation Applicable ATX Model .. 01–02A–46
DTC P0038 [L3] 01–02A–48
California Emission Regulation Applicable ATX Model 01–02A–48
Except for California Emission Regulation Applicable ATX Model .. 01–02A–50
DTC P0043 [L3] 01–02A–52
DTC P0044 [L3] 01–02A–54
DTC P0069 [L3] 01–02A–56
DTC P0101 [L3] 01–02A–57
DTC P0102 [L3] 01–02A–59
DTC P0103 [L3] 01–02A–61
DTC P0107 [L3] 01–02A–63
DTC P0108 [L3] 01–02A–65
DTC P0111 [L3] 01–02A–67
DTC P0112 [L3] 01–02A–68
DTC P0113 [L3] 01–02A–70
DTC P0116 [L3] 01–02A–72
DTC P0117 [L3] 01–02A–74
DTC P0118 [L3] 01–02A–76
DTC P0122 [L3] 01–02A–78
DTC P0123 [L3] 01–02A–80
DTC P0125 [L3] 01–02A–82
DTC P0126, P0128 [L3] 01–02A–84
DTC P0130 [L3] 01–02A–86
DTC P0131 [L3] 01–02A–88
California Emission Regulation Applicable ATX Model 01–02A–88
Except for California Emission Regulation Applicable ATX Model .. 01–02A–90
DTC P0132 [L3] 01–02A–92
California Emission Regulation Applicable ATX Model 01–02A–92
Except for California Emission Regulation Applicable ATX Model .. 01–02A–94
DTC P0133 [L3] 01–02A–96
California Emission Regulation Applicable ATX Model 01–02A–96
Except for California Emission Regulation Applicable ATX Model .. 01–02A–98
DTC P0134 [L3] 01–02A–100
California Emission Regulation Applicable ATX Model 01–02A–100
Except for California Emission Regulation Applicable ATX Model 01–02A–102
DTC P0137 [L3] 01–02A–104
DTC P0138 [L3] 01–02A–107
DTC P0139 [L3] 01–02A–109
California Emission Regulation Applicable ATX Model 01–02A–109
Except for California Emission Regulation Applicable ATX Model .. 01–02A–1
DTC P0140 [L3] 01–02A–1
DTC P0144 [L3] 01–02A–116
DTC P0171 [L3] 01–02A–118
DTC P0172 [L3] 01–02A–120

DTC P0222 [L3] 01–02A–123
DTC P0223 [L3] 01–02A–125
DTC P0300 [L3] 01–02A–127
DTC P0301, P0302, P0303, P0304
3] 01–02A–130
DTC P0327 [L3] 01–02A–132
DTC P0328 [L3] 01–02A–134
DTC P0335 [L3] 01–02A–136
DTC P0340 [L3] 01–02A–139
DTC P0401 [L3] 01–02A–142
DTC P0403 [L3] 01–02A–144
DTC P0420 [L3] 01–02A–147
DTC P0421 [L3] 01–02A–148
DTC P0441 [L3] 01–02A–150
DTC P0442 [L3] 01–02A–152
DTC P0443 [L3] 01–02A–154
DTC P0446 [L3] 01–02A–156
DTC P0455 [L3] 01–02A–157
DTC P0456 [L3] 01–02A–160
DTC P0461 [L3] 01–02A–162
DTC P0462 [L3] 01–02A–163
DTC P0463 [L3] 01–02A–164
DTC P0480 [L3] 01–02A–165
DTC P0481 [L3] 01–02A–167
DTC P0482 [L3] 01–02A–170
DTC P0500 [L3] 01–02A–172
DTC P0505 [L3] 01–02A–175
DTC P0506 [L3] 01–02A–176
DTC P0507 [L3] 01–02A–178
DTC P0550 [L3] 01–02A–179
DTC P0564 [L3] 01–02A–181
DTC P0571 [L3] 01–02A–183
C P0601 [L3] 01–02A–185
DTC P0602 [L3] 01–02A–186
DTC P0604 [L3] 01–02A–187
DTC P0606 [L3] 01–02A–188
DTC P0607 [L3] 01–02A–189
DTC P0610 [L3] 01–02A–190
DTC P0638 [L3] 01–02A–191
DTC P0661 [L3] 01–02A–192
DTC P0662 [L3] 01–02A–194
DTC P0703 [L3] 01–02A–196
DTC P0704 [L3] 01–02A–198
DTC P0850 [L3] 01–02A–200
DTC P2004 [L3] 01–02A–203
DTC P2006 [L3] 01–02A–206
DTC P2009 [L3] 01–02A–208
DTC P2010 [L3] 01–02A–210
DTC P2088 [L3] 01–02A–212
DTC P2089 [L3] 01–02A–214
DTC P2096 [L3] 01–02A–216
DTC P2097 [L3] 01–02A–219
DTC P2100 [L3] 01–02A–221
DTC P2101 [L3] 01–02A–223
DTC P2102 [L3] 01–02A–226
DTC P2103 [L3] 01–02A–228
DTC P2107 [L3] 01–02A–230
DTC P2108 [L3] 01–02A–231
California Emission Regulation Applicable ATX Model 01–02A–231
Except for California Emission Regulation Applicable ATX Model ... 01–02A–231
DTC P2109 [L3] 01–02A–233
DTC P2112 [L3] 01–02A–234
DTC P2119 [L3] 01–02A–235
DTC P2122 [L3] 01–02A–236
DTC P2123 [L3] 01–02A–238
DTC P2127 [L3] 01–02A–240
DTC P2128 [L3] 01–02A–242
DTC P2135 [L3] 01–02A–244
DTC P2138 [L3] 01–02A–245
DTC P2177 [L3] 01–02A–246
DTC P2178 [L3] 01–02A–248
DTC P2187 [L3] 01–02A–250
DTC P2188 [L3] 01–02A–253
DTC P2195 [L3] 01–02A–255
California Emission Regulation Applicable ATX Model 01–02A–255
Except for California Emission Regulation Applicable ATX Model ... 01–02A–257
DTC P2196 [L3] 01–02A–259
California Emission Regulation Applicable ATX Model 01–02A–259
Except for California Emission Regulation Applicable ATX Model ... 01–02A–261
DTC P2228 [L3] 01–02A–263
DTC P2229 [L3] 01–02A–264
DTC P2237 [L3] 01–02A–265
DTC P2251 [L3] 01–02A–267
DTC P2270 [L3] 01–02A–269
DTC P2271 [L3] 01–02A–271
DTC P2274 [L3] 01–02A–273
DTC P2275 [L3] 01–02A–275
DTC P2401 [L3] 01–02A–277
DTC P2402 [L3] 01–02A–280
DTC P2404 [L3] 01–02A–282
DTC P2405 [L3] 01–02A–283
DTC P2407 [L3] 01–02A–284
DTC P2502 [L3] 01–02A–285
DTC P2503 [L3] 01–02A–287
DTC P2504 [L3] 01–02A–289
DTC P2507 [L3] 01–02A–291
DTC P2610 [L3] 01–02A–293
DTC P2676 [L3] 01–02A–294
DTC P2677 [L3] 01–02A–296

ON-BOARD DIAGNOSTIC WIRING DIAGRAM [L3]

E6U010200000W01

California Emission Regulation Applicable ATX Model

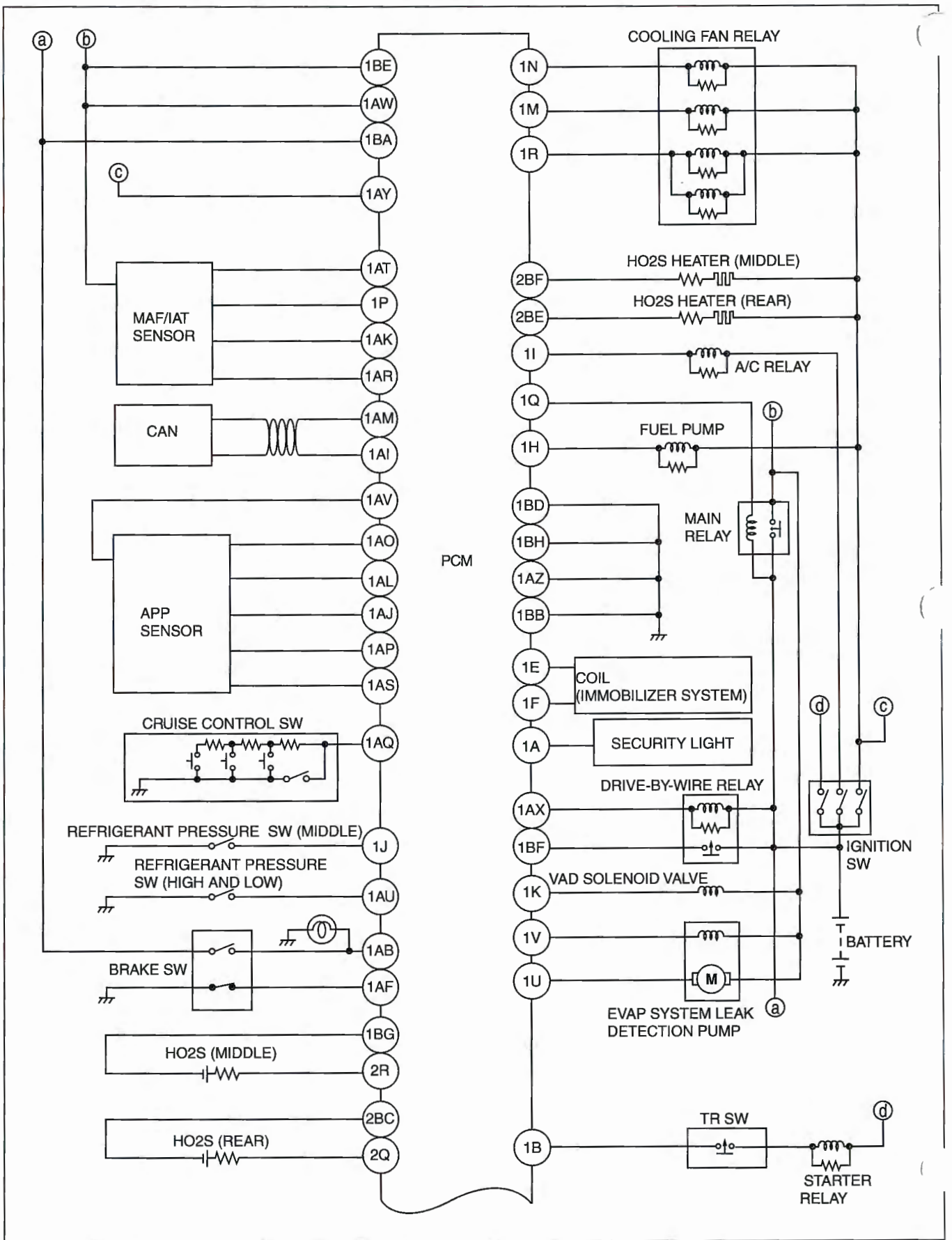

E6U140AW5901

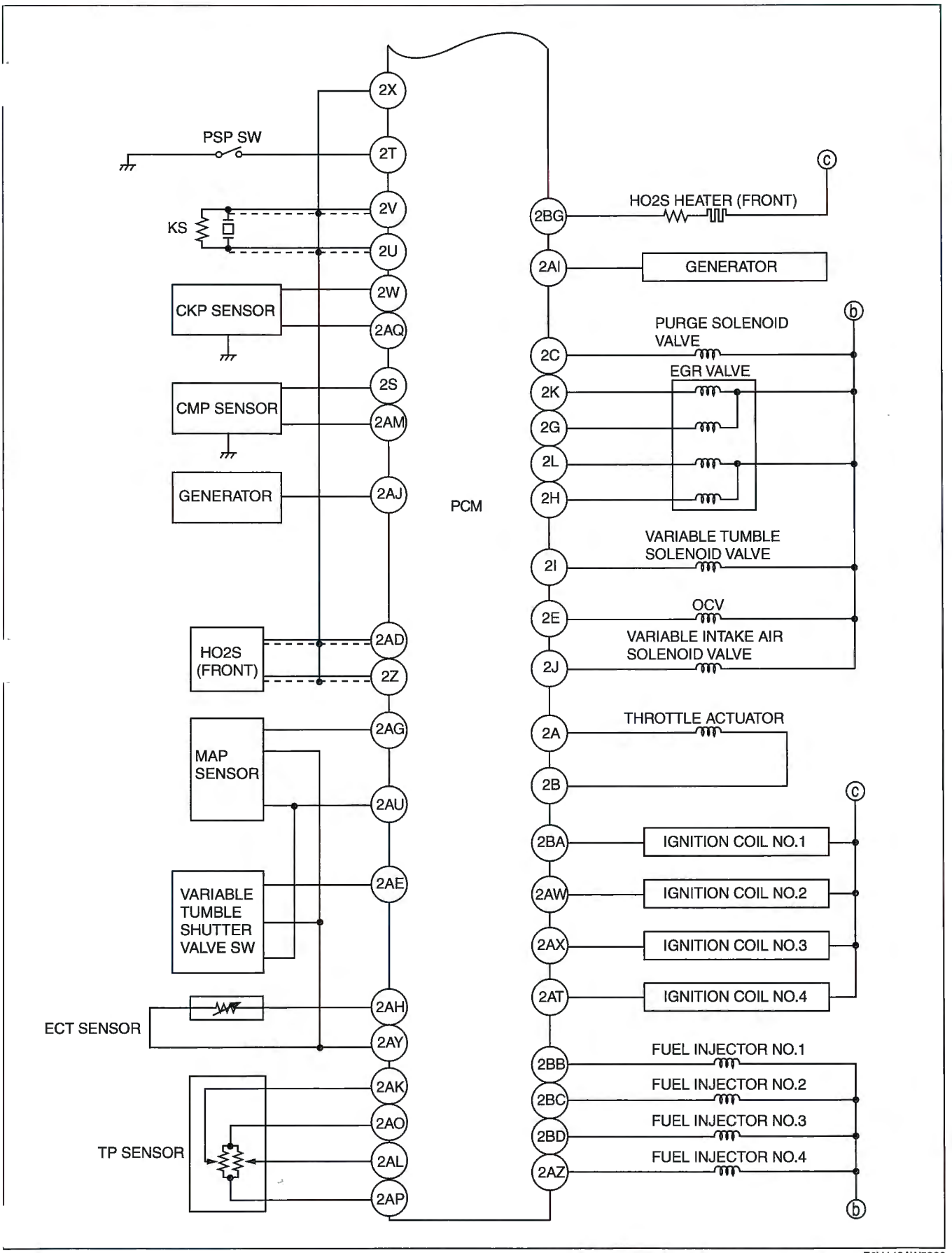

E6U140AW5902

Except for California Emission Regulation Applicable ATX Model

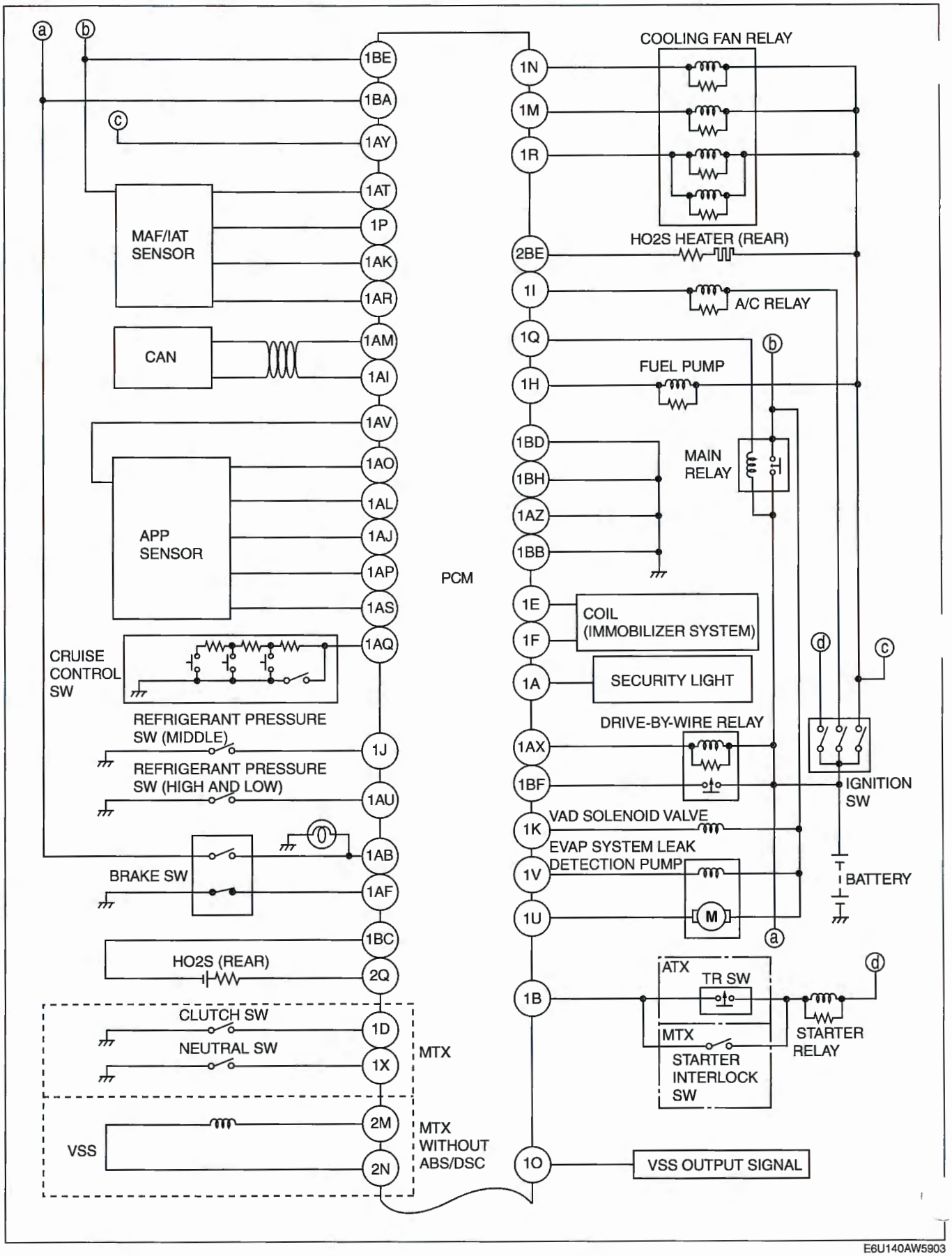

E6U140AW5903

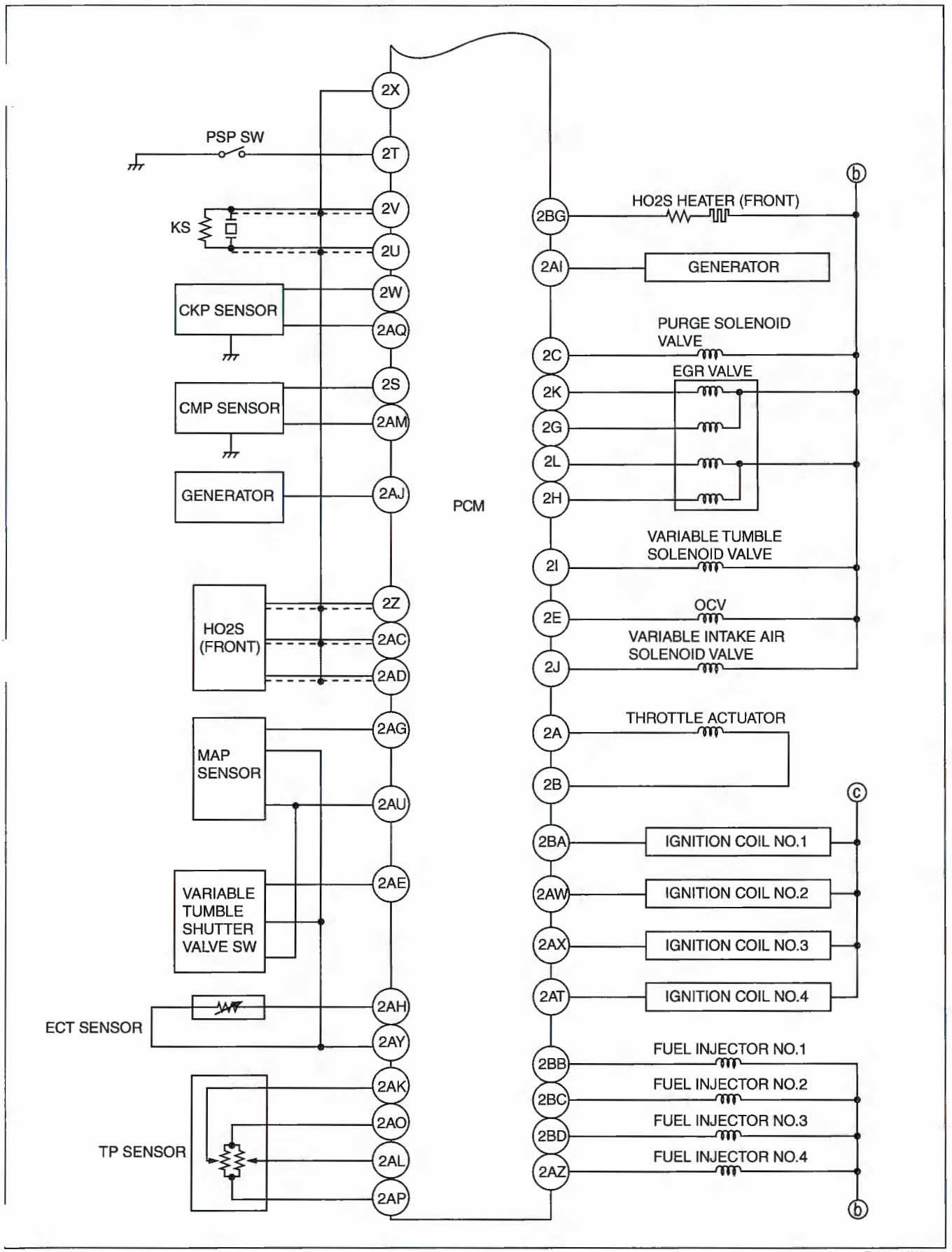

E6U140AW5904

MONITORING SYSTEM AND CONTROL SYSTEM DEVICE RELATIONSHIP CHART [L3]

E6U010200000W02

California Emission Regulation Applicable ATX Model

×: Applicable

Component	Oxygen sensor monitor	Oxygen sensor heater monitor	Catalyst monitor	Misfire monitor	Fuel system monitor	Evaporative system monitor	EGR system monitor	Thermostat monitor
Input								
Battery		x		x		x		
Ignition switch	x	x				x		
A/C switch, refrigerant pressure switch (high, low pressure)							x	x
TP sensor	x		x	x	x	x	x	
ECT sensor	x	x	x	x	x	x	x	x
IAT sensor	x	x	x		x	x	x	x
MAF sensor	x	x	x	x	x		x	x
HO2S (front)	x	x	x		x			
HO2S (middle)	x	x	x		x			
HO2S (rear)	x	x			x			
Fuel gauge sender unit						x		
BARO sensor	x	x	x		x	x		
MAP sensor							x	
CMP sensor				x				
CKP sensor	x	x	x	x	x	x	x	x
VSS							x	x
Output								
Fuel injector					x			
HO2S heater (front)		x						
HO2S heater (middle)		x						
HO2S heater (rear)		x						
EGR valve							x	
Purge solenoid valve	x		x		x	x		
EVAP system leak detection pump						x		
MIL	x	x	x	x	x	x	x	x
DLC-2	x	x	x	x	x	x	x	x

Except for California Emission Regulation Applicable ATX Model

×: Applicable

Component	Oxygen sensor monitor	Oxygen sensor heater monitor	Catalyst monitor	Misfire monitor	Fuel system monitor	Evaporative system monitor	EGR system monitor	Thermostat monitor
Input								
Battery		x		x		x		
Ignition switch	x	x				x		
A/C switch, refrigerant pressure switch (high, low pressure)							x	x
TP sensor	x		x	x	x	x	x	
ECT sensor	x	x	x	x	x	x	x	x
IAT sensor	x		x		x	x	x	x
MAF sensor	x	x	x	x	x		x	x
HO2S (front)	x	x	x		x			
HO2S (rear)	x	x			x			
Fuel gauge sender unit						x		
BARO sensor	x					x		
MAP sensor							x	
CMP sensor				x				
CKP sensor	x	x	x	x	x	x	x	x
S	x					x	x	x
Output								
Fuel injector					x			
HO2S heater (front)		x						
HO2S heater (middle)		x						
HO2S heater (rear)		x						
EGR valve							x	
Purge solenoid valve	x		x		x	x		
EVAP system leak detection pump						x		
MIL	x	x	x	x	x	x	x	x
DLC-2	x	x	x	x	x	x	x	x

FOREWORD [L3]

E6U010200000W03

- When the customer reports a vehicle malfunction, check the malfunction indicator lamp (MIL) indication and diagnostic trouble code (DTC), then diagnose the malfunction according to following flowchart.
  - — If the DTC exists, diagnose the applicable DTC inspection. (See 01–02A–18 DTC TABLE [L3].)
  - — If the DTC does not exist and the MIL does not illuminate or flash, diagnose the applicable symptom troubleshooting. (See 01–03A–11 QUICK DIAGNOSTIC CHART [L3].)

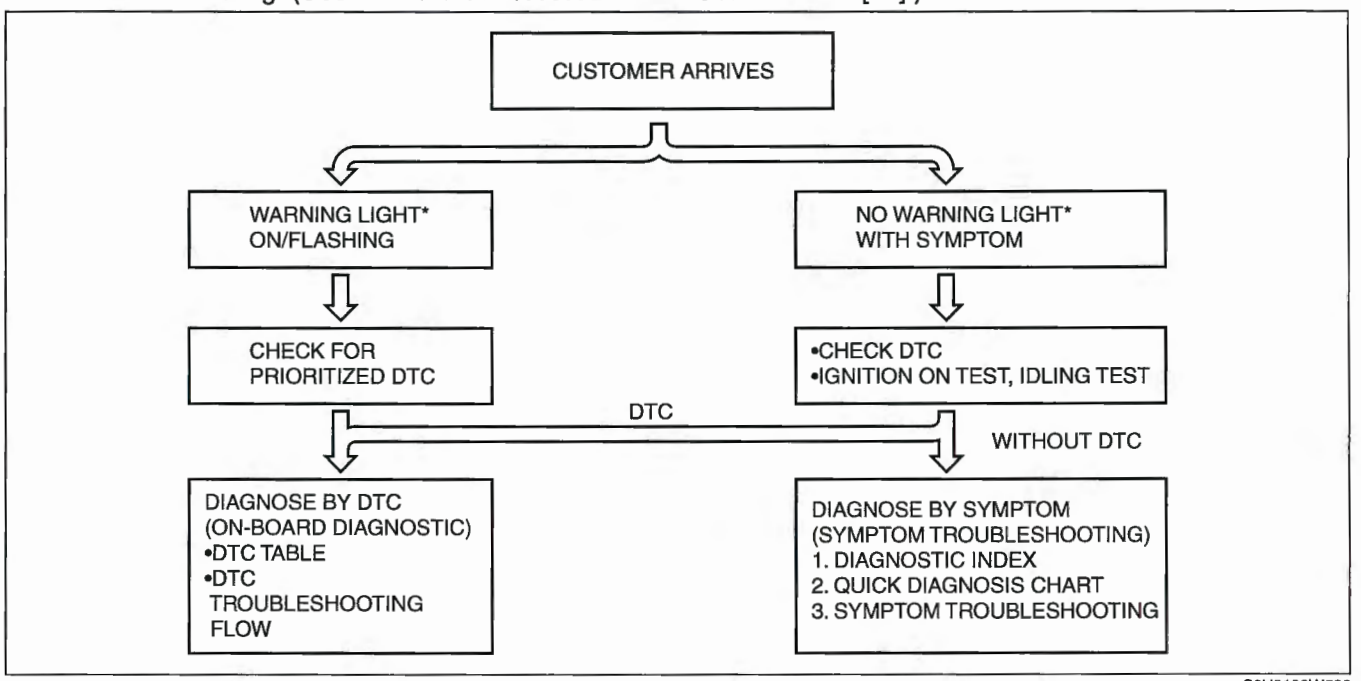

C6U0103W500

*: Malfunction Indicator Lamp (MIL), Generator Warning Light, Security Light

OBD-II PENDING TROUBLE CODE [L3]

E6U010200000W04

- These appear when a problem is detected in a monitored system. The code for a failed system is stored in the PCM memory in the first drive cycle. This code is called the pending code. If the PCM judges that the system returned to normal or the problem was mistakenly detected, deletes the pending code. If the problem is found in the second drive cycle too, the PCM judges that the system has failed, and the DTC is stored.

OBD-II FREEZE FRAME DATA [L3]

E6U010200000W05

- This is the technical data which indicates the engine condition at the time of the first malfunction. This data will remain in the memory even if another emission-related DTC is stored, with the exception of the Misfire or Fuel System DTCs. Once freeze frame data for the Misfire or Fuel System DTC is stored, it will overwrite any previous data and the freeze frame will not be overwritten again.

OBD-II ON-BOARD SYSTEM READINESS TEST [L3]

E6U010200000W06

- This shows OBD-II systems operating status. If any monitor function is incomplete, WDS or equivalent will identify which monitor function has not been completed. Misfires, Fuel System and Comprehensive Components (CCM) are continuous monitoring-type functions. The catalyst, EGR system, evaporation system and oxygen sensor will be monitored under drive cycles. The OBD-II diagnostic system is initialized by performing the DTC cancellation procedure or disconnecting the negative battery cable.

OBD-II DIAGNOSTIC MONITORING TEST RESULTS [L3]

E6U010200000W07

- These results from the intermittent monitor system technical data, which are used to determine whether the system is normal or not. They also display the system's thresholds and diagnostic results. The intermittent monitor system monitors the oxygen sensor, EVAP purge system, catalyst and the EGR system.

OBD-II READ/CLEAR DIAGNOSTIC TEST RESULTS [L3]

E6U010200000

- This retrieves all stored DTCs in the PCM and clears the DTC, Freeze Frame Data, On-Board Readiness Te Results, Diagnostic Monitoring Test Results and Pending Trouble Codes.

OBD-II PARAMETER IDENTIFICATION (PID) ACCESS [L3]

E6U010200000W09

- The PID mode allows access to certain data values, analog and digital inputs and outputs, calculated values and system status information. Since PID values for output devices are PCM internal data values, inspect each device to identify which output devices are malfunctioning.

ON-BOARD DIAGNOSTIC TEST [L3]

E6U010200000W10

DTCs Reading Procedure

1. Perform the necessary vehicle preparation and visual inspection.
2. Connect WDS or equivalent to the vehicle DLC-2 16-pin connector located at the left side of the center console.
3. Retrieve DTCs by WDS or equivalent.

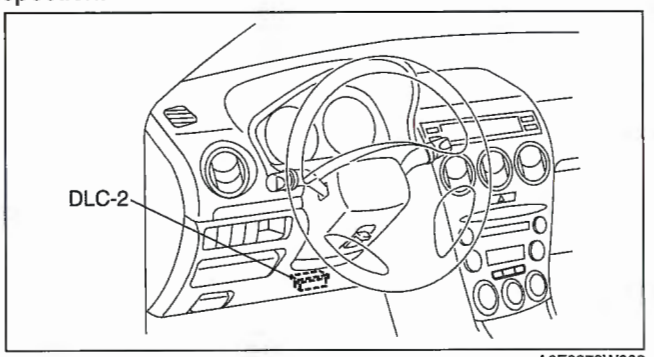

A6E3970W002

Pending Trouble Code Access Procedure

1. Perform the necessary vehicle preparation and visual inspection.
2. Connect WDS or equivalent to the vehicle DLC-2 16-pin connector located at the left side of the center console.
3. Retrieve **PENDING trouble codes** by WDS or equivalent.

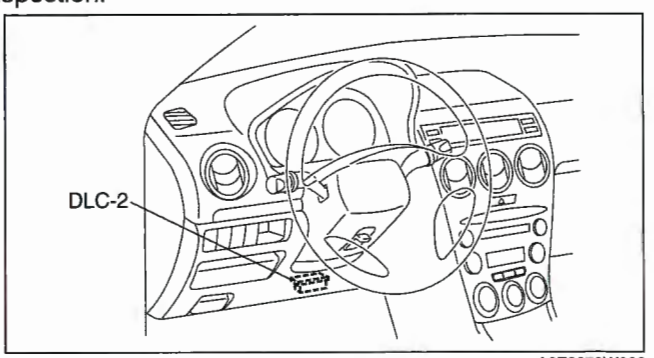

A6E3970W002

Freeze Frame PID Data Access Procedure

1. Perform the necessary vehicle preparation and visual inspection.
2. Connect WDS or equivalent to the vehicle DLC-2 16-pin connector located at the left side of the center console.
3. Record the FREEZE FRAME PID DATA by WDS or equivalent.

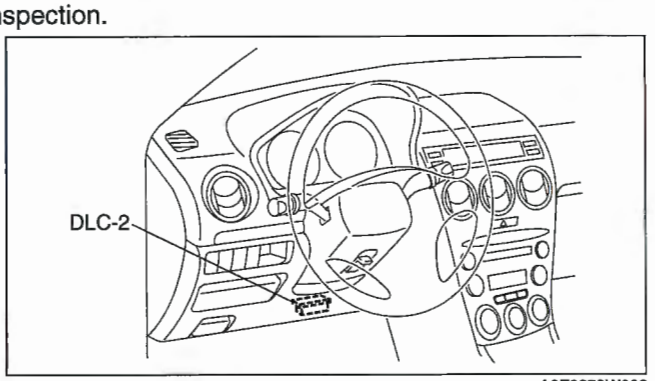

A6E3970W002

On-Board System Readiness Tests Access Procedure

1. Perform the necessary vehicle preparation and visual inspection.
2. Connect WDS or equivalent to the vehicle DLC-2 16-pin connector located at the left side of the center console.
3. Monitor the OBD-II systems operating status by WDS or equivalent.

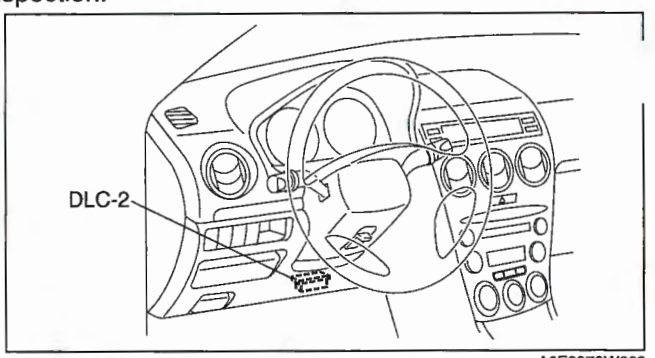

A6E3970W002

PID/DATA Monitor and Record Procedure

1. Perform the necessary vehicle preparation and visual inspection.
2. Connect WDS or equivalent to the vehicle DLC-2 16-pin connector located at the left side of the center console.
3. Access and monitor PIDs by WDS or equivalent.

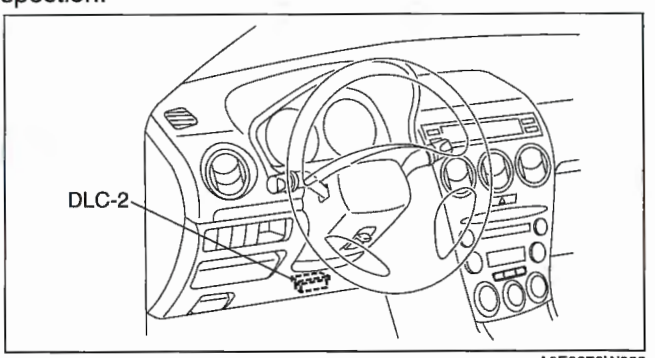

A6E3970W002

Diagnostic Monitoring Test Results Access Procedure

1. Perform the necessary vehicle preparation and visual inspection.
2. Connect WDS or equivalent to the vehicle DLC-2 16-pin connector located at the left side of the center console.
3. Access to the DIAGNOSTIC MONITORING TEST RESULTS and read the test results by WDS or equivalent.

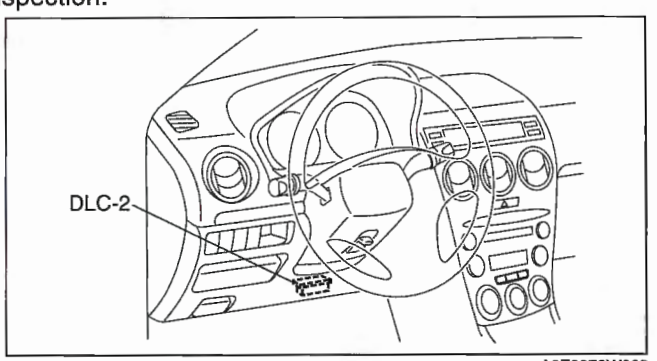

A6E3970W002

AFTER REPAIR PROCEDURE [L3]

E6U010200000W11

1. Connect WDS or equivalent.
2. Cycle the ignition switch from OFF to ON.
3. Record DTC if retrieved.
4. Clear all diagnostic data by WDS or equivalent.

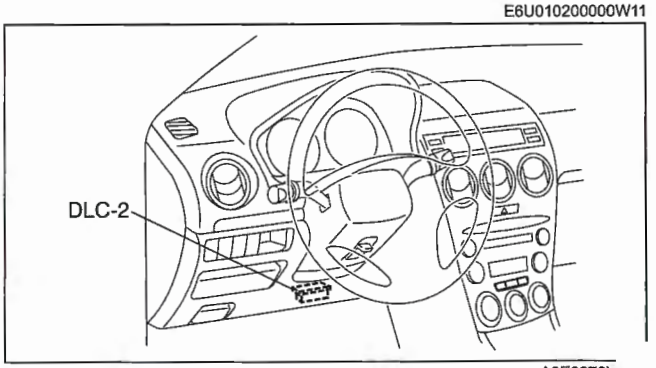

A6E3970v

KOEO/KOER SELF TEST [L3]

E6U010200000W12

1. Perform the necessary vehicle preparation and visual inspection.
2. Connect the WDS or equivalent to the vehicle DLC-2 16-pin connector located in the driver compartment.
3. Retrieve the KOEO/KOER DTCs using the WDS or equivalent.

OBD-II DRIVE MODE [L3]

E6U010200000W13

- Using the OBD-II drive mode, the monitoring item requested by OBD-II regulations can be easily diagnosed.
- Performing the Drive Mode inspects the OBD-II system for proper operation and must be performed to ensure that no additional DTCs are present.
  The OBD-II drive mode is divided into the specific drive mode and single drive mode.
- For the specific drive mode, specified drive modes have been set for each individual monitoring item requested by OBD-II regulations, and they can be diagnosed individually. For the single drive mode, the entire monitoring item requested by OBD-II regulations can be diagnosed.
- The following modes are in the specific drive mode. The applicable system is diagnosed by driving in the following drive modes.
  — PCM Adaptive Memory Produce Drive Mode
  — EGR System Repair Verification Drive Mode
  — HO2S heater, HO2S, and TWC Repair Verification Drive Mode
  — EVAP System Repair Verification Drive Mode
- The following systems are diagnosed with the single drive mode.
  — EGR system
  — Oxygen sensor (HO2S)
  — Oxygen sensor heater
  — Catalytic converter (TWC)
  — Fuel, misfire and evaporative (EVAP) system

Caution

- **While performing the Drive Mode, always operate the vehicle in a safe and lawful manner.**
- **When the WDS or equivalent is used to observe monitor system status while driving, be sure to have another technician with you, or record the data in the WDS or equivalent using the PID/DATA MONITOR AND RECORD function and inspect later.**

Note

- Vehicle speed and engine speed detected by the PCM may differ from that indicated by the speedometer and tachometer. Use the WDS or equivalent to monitor vehicle speed.
- If the OBD-II system inspection is not completed during the Drive Mode, the following causes are considered:
  — The OBD-II system detects the malfunction.
  — The Drive Mode procedure is not completed correctly.
- Disconnecting the battery will reset the memory. Do not disconnect the battery during and after Drive Mode.
- The WDS or equivalent can be used at anytime through the course of the Drive Mode to monitor the completion status. Monitoring can be done by viewing the ON BOARD SYSTEM READINESS menu.
- The OBD monitoring status can be confirmed with the ignition switch operation. During KOEO, the MIL illuminates for a fail-light inspection for **approx. 17 s**. The OBD monitoring status is confirmed after the fail-light inspection.
  — If all of the diagnosis is completed even one time, the MIL will continue to illuminate.
  — If all of the diagnosis is not completed, the MIL flashes for **approx. 7 s**, and then it illuminates until the engine is started.

PCM Adaptive Memory Production Drive Mode

1. Start the engine and warm it up completely.
2. Verify the following conditions and correct if necessary:
   - All accessory loads (A/C, headlights, blower fan, rear window defroster) are off.
   - Initial ignition timing and idle speed are within the specification.
3. Perform no load racing at the engine speed shown in the graph, then idle the engine for more than **60 s** after the cooling fan has stopped. If possible, monitor RPM PID for engine speed during this procedure.

California emission regulation applicable ATX model

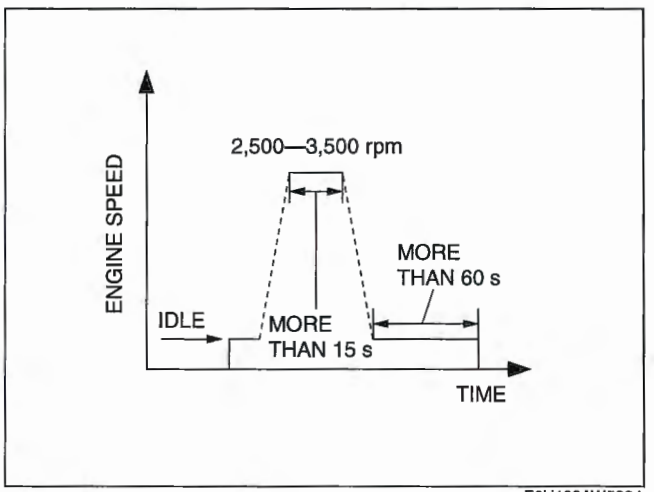

E6U102AW5224

Except for California emission regulation applicable ATX model

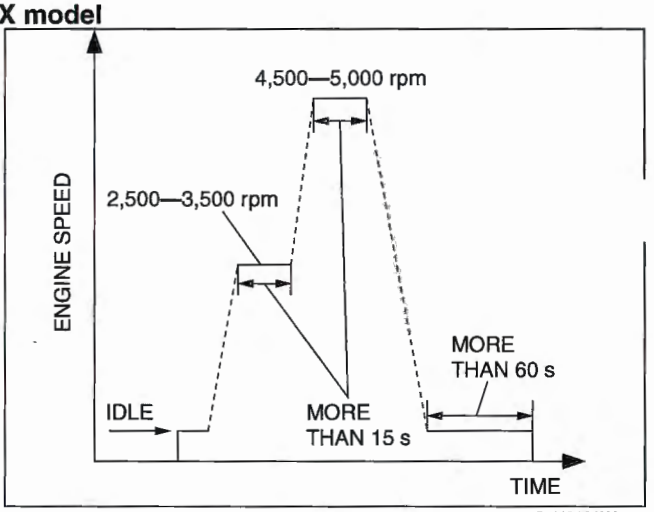

C6U0102W501

EGR System Repair Verification Drive Mode

1. Perform "PCM Adaptive Memory Production Drive Mode" first.
2. Verify all accessory loads (A/C, headlights, blower fan, rear window defroster) are off.
3. Drive the vehicle as shown in the graph.
4. Stop the vehicle and access ON BOARD SYSTEM READINESS menu of GENERIC OBD-II FUNCTION to verify the OBD monitoring status.
   - If completed, the OBD monitoring status items change from non-completed to completed.
   - If not completed, turn the ignition switch off then repeat from Step 3.
5. Access DIAGNOSTIC MONITORING TEST RESULTS menu of GENERIC OBD-II FUNCTIONS to verify the monitor results.
   - If detected values are not within specification, repair has not been completed.
6. Verify no DTCs are available.

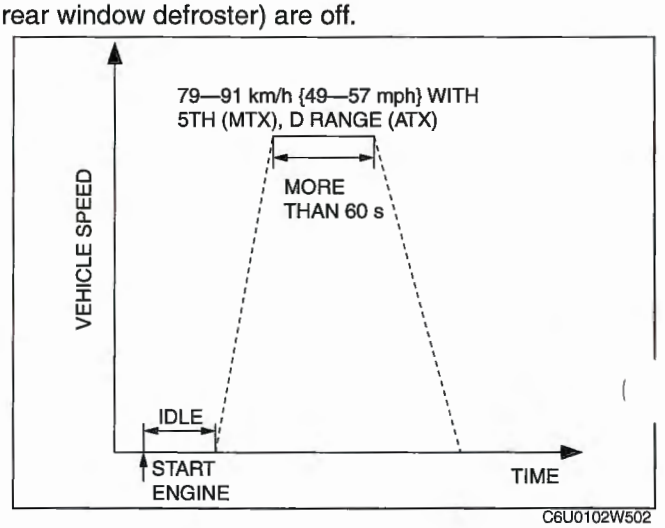

C6U0102W502

HO2S heater, HO2S, and TWC Repair Verification Drive Mode

1. Perform "PCM Adaptive Memory Production Drive Mode" first.
2. Verify all accessory loads (A/C, headlights, blower fan, rear window defroster) are off.
3. Drive the vehicle as shown in the graph. The driving conditions before driving at constant speed are not specified.

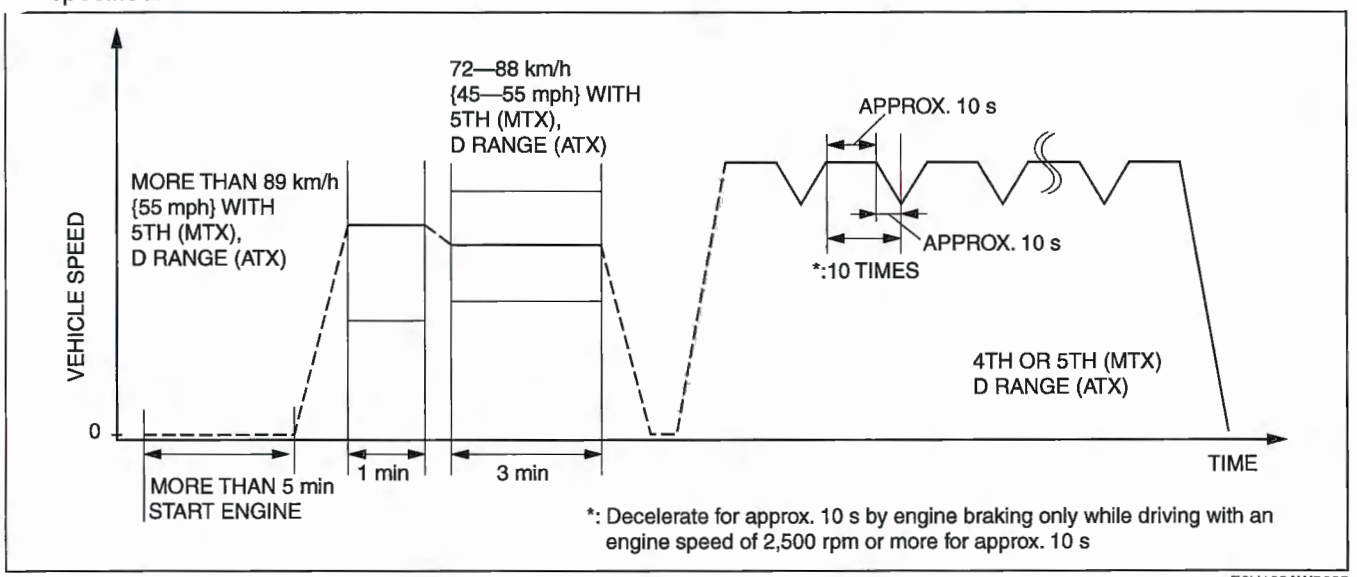

E6U102AW5225

4. Stop the vehicle and access ON BOARD SYSTEM READINESS menu of GENERIC OBD-II FUNCTION to verify the OBD monitoring status.
   - If completed, the OBD monitoring status items change from non-completed to completed.
   - If not completed, turn the ignition switch off then repeat from Step 3.
5. Access DIAGNOSTIC MONITORING TEST RESULTS menu of GENERIC OBD-II FUNCTIONS to verify the monitor results.
   - If detected values are not within the specification, repair has not been completed.
6. Verify no DTCs are available.

EVAP System Repair Verification Drive Mode

Note

- If "EVAP System Repair Verification Drive Mode" cannot be performed (it is impossible to drive the vehicle under this drive mode condition), perform EVAP system test procedure as an alternative. (See 01–03A–62 ENGINE CONTROL SYSTEM OPERATION INSPECTION [L3].)

1. Verify that all of the following PIDs are within the following specifications. All PIDs must be within specifications before engine is started to initiate the EVAP system test.
   - BARO: **more than 72.2 kPa {542 mmHg, 21.3 inHg}**
   - IAT: **5—40 °C {41—104 °F}**
   - FTL: **15—85%**
   - B+: **more than 10.9 V**
2. Clear the DTC from the PCM memory using the WDS or equivalent.
3. Start the engine and idle it for **more than 10 s**, then turn ignition switch off.
4. Leave vehicle for **5 hours or more**.
5. Start the engine and idle for **more than 15 min**.
6. Drive the vehicle at an engine speed of **65—80 km/h {40—50 mph}** for **more than 5 min**.
7. Stop the vehicle and turn ignition switch off.
8. Leave vehicle as it is for **10 min or more**.
9. Start the engine.
10. Access the ON BOARD SYSTEM READINESS to verify the OBD monitoring status.
    - If completed, the OBD monitoring status items change from non-completed to completed.
    - If not completed, turn the ignition switch off then go back to Step 1.
11. Access the DIAGNOSTIC MONITORING TEST RESULTS to verify the monitor results.
    - If detected values are not within specification, repair has not completed.
12. Verify no DTCs are available.

PCM Adaptive Memory Production, EGR, HO2S heater, HO2S, TWC, and EVAP System Repair Verification Drive Mode

1. Start the engine and warm it up completely.
2. Clear the DTC from the PCM memory using the WDS or equivalent.
3. Verify the following conditions and correct if necessary:
   - All accessory loads (A/C, headlights, blower fan, rear window defroster) are off.
   - Initial ignition timing and idle speed are within the specification.
4. Verify that all of the following PIDs are within the following specifications. All PIDs must be within specifications from Step 5 to Step 6.
   - BARO: **more than 72.2 kPa {542 mmHg, 21.3 inHg}**
   - IAT: **5—40 °C {41—104 °F}**
   - FTL: **15—85%**
   - B+: **more than 10.9 V**
5. With the vehicle stopped, race the engine at the engine speed indicated, and then drive the vehicle as shown in the graph. The driving conditions before driving at constant speed are not specified. If possible, monitor RPM PID for engine speed during this procedure.

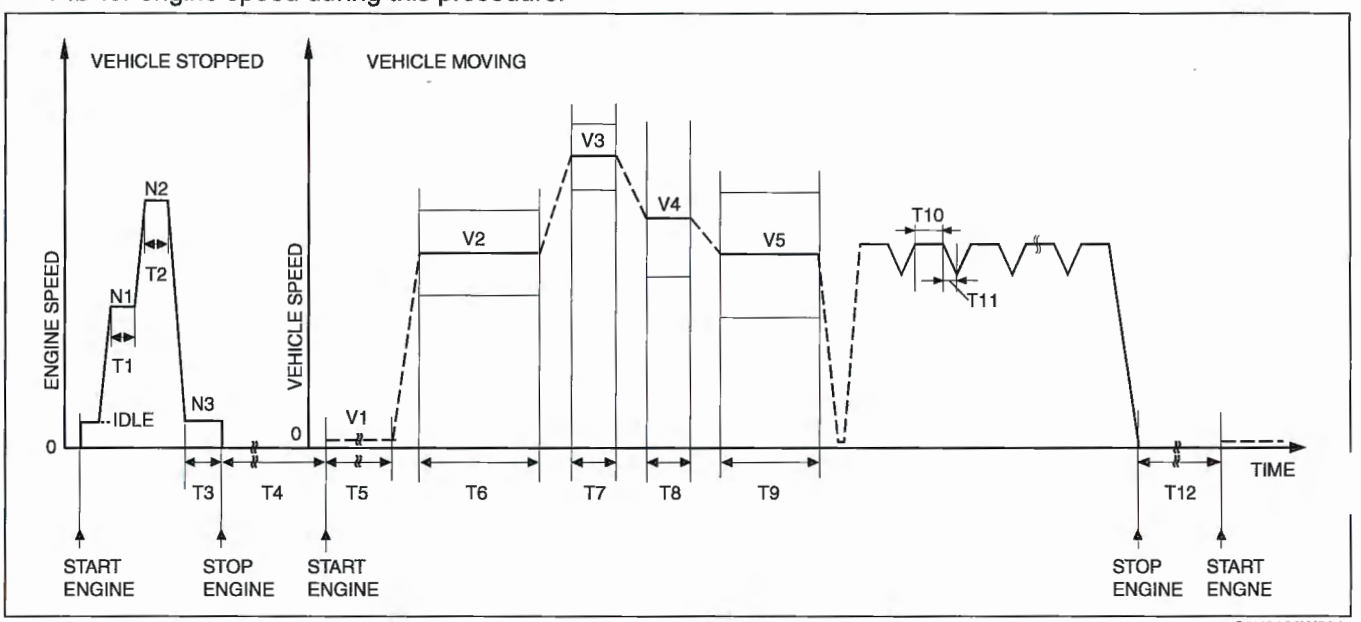

C6U0102W504

Step	Time	Engine speed (rpm)	Vehicle speed (km/h {mph})	Vehicle condition
1	T1: More than 15 s	N1: 2,500—3,500	0 {0}	—
2*	T2: More than 15 s	N2: 4,500—5,000	0 {0}	—
3	T3: More than 60 s	N3: Idle	0 {0}	Idle the engine after the cooling fan has stopped
4	T4: More than 5 h	0	0 {0}	Keep the ignition switch off
5	T5: More than 15 min	Idle	V1: 0 {0}	—
6	T6: 5 min	—	V2: 65—80 {40—50}	MTX: 5TH ATX: D range
7	T7: 1 min	—	V3: 79—91 {49—57}	MTX: 5TH ATX: D range
8	T8: 1 min	—	V4: More than 89 {55}	MTX: 5TH ATX: D range
9	T9: 3 min	—	V5: 72—88 {45—55}	MTX: 5TH ATX: D range
10	T10: Approx. 10 s	More than 2,500	—	—
11	T11: Approx. 10 s	—	—	Decelerate by engine braking only (10 times) MTX: 4 or 5TH ATX: D range
12	T12: More than 10 min	0	0 {0}	Keep the ignition switch off

* : Except for California emission regulation applicable ATX model

6. Turn the ignition switch off.
7. Access the ON BOARD SYSTEM READINESS to verify the OBD monitoring status.
   - If completed, all of the OBD monitoring status items change from non-completed to completed.
   - If not completed, turn the ignition switch off, then perform the applicable specific drive mode for any monitoring item that was not in the detection condition.
8. Access the DIAGNOSTIC MONITORING TEST RESULTS to verify the monitor results.
   - If detected values are not within specification, repair has not been completed.

DIAGNOSTIC MONITORING TEST RESULTS [L3]

E6U010200000W14

- The purpose of this test mode is to confirm the result of OBD-II monitor diagnostic test results. The result values stored when particular monitor is completed are displayed. If the monitor is not completed, initial value is displayed.

TEST ID	Description	Related system
10: 01: 80*1	HO2S (Front) lean-to-rich response time (calculated)	HO2S
10: 01: 81*1	HO2S (Front) rich-to-lean response time (calculated)	
10: 01: 84*2	HO2S (Front) period (calculated)	
10: 02: 03*2	Low HO2S (Rear) voltage for switch time calculation (constant)	
10: 02: 04*2	High HO2S (Rear) voltage for switch time calculation (constant)	
10: 02: 05*2	HO2S (Rear) rich-to-lean response time (calculated)	
10: 02: 85*1	HO2S (Middle) rich-to-lean response time (calculated)	
10: 21: 80	Front and HO2S (Rear) switching time ratio	Catalyst
10: 31: 83	EGR pressure variation	EGR
10: 3A: 80	EVAP system leak detection pump gross leak check	EVAP
10: 3B: 80	EVAP system leak detection pump small leak check	
10: 3C: 80*3	EVAP system leak detection pump very small leak check	
10: 3D: 80	Purge flow monitor	
10: A2: 0B	EWMA misfire counts for last 10 driving cycles	Misfire
10: A2: 0C	Misfire counts for last/current driving cycles	
10: A3: 0B	EWMA misfire counts for last 10 driving cycles	
10: A3: 0C	Misfire counts for last/current driving cycles	
10: A4: 0B	EWMA misfire counts for last 10 driving cycles	
10: A4: 0C	Misfire counts for last/current driving cycles	
10: A5: 0B	EWMA misfire counts for last 10 driving cycles	
10: A5: 0C	Misfire counts for last/current driving cycles	
10: E1: 80	Heat radiation ratio	Engine cooling system
10: E1: 81	Engine coolant temperature	

*1 : California emission regulation applicable ATX model
*2 : Except for California emission regulation applicable ATX model
*3 : California emission regulation applicable model

DTC TABLE [L3]

E6U010200000W15

×: Applicable
—: Not applicable

DTC No.	Condition	MIL	DC	Monitor item	Self-test type*1	Memory function	Page
B1213	Number of valid keys is below minimum.	(See 09–02F–3 DTC TABLE [IMMOBILIZER SYSTEM].)					
B1342	PCM is defective.	OFF	—	—	C, O	×	(See 01–02A–25 DTC B1342 [L3].)
B1600	ID number signal is not received.	(See 09–02F–3 DTC TABLE [IMMOBILIZER SYSTEM].)					
B1601	PCM received incorrect ID number from key (transponder).	(See 09–02F–3 DTC TABLE [IMMOBILIZER SYSTEM].)					
B1681	Coil signal is not received.	(See 09–02F–3 DTC TABLE [IMMOBILIZER SYSTEM].)					
B2103	Coil failure.	(See 09–02F–3 DTC TABLE [IMMOBILIZER SYSTEM].)					
B2431	Transponder programming failure.	(See 09–02F–3 DTC TABLE [IMMOBILIZER SYSTEM].)					
P0011	CMP Timing over-advanced	ON	1	CCM	C, R	×	(See 01–02A–26 DTC P0011 [L3].)
P0012	CMP Timing over-retarded	ON	2	CCM	C, R	×	(See 01–02A–28 DTC P0012 [L3].)
P0016	CKP-CMP correlation	ON	2	CCM	C	×	(See 01–02A–30 DTC P0016 [L3].)
P0030	Front HO2S heater control circuit problem	ON	2	HO2S heater	C, O, R	×	(See 01–02A–32 DTC P0030 [L3].)
P0031	Front HO2S heater circuit low input	ON	2	HO2S heater	C, O, R	×	(See 01–02A–36 DTC P003 [L3].)
P0032	Front HO2S heater circuit high input	ON	2	HO2S heater	C, O, R	×	(See 01–02A–40 DTC P0032 [L3].)
P0037	Middle*2/Rear*3 HO2S heater circuit low input	ON	2	HO2S heater	C, O, R	×	(See 01–02A–44 DTC P0037 [L3].)
P0038	Middle*2/Rear*3 HO2S heater circuit high input	ON	2	HO2S heater	C, O, R	×	(See 01–02A–48 DTC P0038 [L3].)
P0043*2	Rear HO2S heater circuit low input	ON	2	HO2S heater	C, O, R	×	(See 01–02A–52 DTC P0043 [L3].)
P0044*2	Rear HO2S heater circuit high input	ON	2	HO2S heater	C, O, R	×	(See 01–02A–54 DTC P0044 [L3].)
P0069	MAF circuit range/performance problem	ON	2	CCM	C	×	(See 01–02A–56 DTC P0069 [L3].)
P0101	Manifold absolute pressure/ atmospheric pressure correlation	ON	2	CCM	C	×	(See 01–02A–57 DTC P0101 [L3].)
P0102	MAF circuit low input	ON	1	CCM	C, O, R	×	(See 01–02A–59 DTC P0102 [L3].)
P0103	MAF circuit high input	ON	1	CCM	C, O, R	×	(See 01–02A–61 DTC P0103 [L3].)
P0107	MAP sensor circuit low input	ON	1	CCM	C, O, R	×	(See 01–02A–63 DTC P0107 [L3].)

DTC No.	Condition	MIL	DC	Monitor item	Self-test type*1	Memory function	Page
P0108	MAP sensor circuit high input	ON	1	CCM	C, O, R	×	(See 01–02A–65 DTC P0108 [L3].)
P0111	IAT circuit performance problem	ON	2	CCM	C	×	(See 01–02A–67 DTC P0111 [L3].)
P0112	IAT circuit low input	ON	1	CCM	C, O, R	×	(See 01–02A–68 DTC P0112 [L3].)
P0113	IAT circuit high input	ON	1	CCM	C, O, R	×	(See 01–02A–70 DTC P0113 [L3].)
P0116	Engine coolant temperature circuit range/performance	ON	2	Engine cooling system	C	×	(See 01–02A–72 DTC P0116 [L3].)
P0117	ECT circuit low input	ON	1	Engine cooling system	C, O, R	×	(See 01–02A–74 DTC P0117 [L3].)
P0118	ECT circuit high input	ON	1	Engine cooling system	C, O, R	×	(See 01–02A–76 DTC P0118 [L3].)
P0122	TP sensor No.1 circuit low input	ON	1	CCM	C, O, R	×	(See 01–02A–78 DTC P0122 [L3].)
P0123	TP sensor No.1 circuit high input	ON	1	CCM	C, O, R	×	(See 01–02A–80 DTC P0123 [L3].)
P0125	Excessive time to enter closed loop fuel control	ON	2	Engine cooling system	C	×	(See 01–02A–82 DTC P0125 [L3].)
P0126	Coolant thermostat stuck open	ON	2	Engine cooling system	C	×	(See 01–02A–84 DTC P0126, P0128 [L3].)
P0128	Coolant thermostat stuck open	ON	2	Engine cooling system	C	×	(See 01–02A–84 DTC P0126, P0128 [L3].)
P0130*2	Front HO2S circuit problem	ON	2	HO2S	C, O, R	×	(See 01–02A–86 DTC P0130 [L3].)
P0131	Front HO2S circuit low input	ON	2	HO2S	C, O, R	×	(See 01–02A–88 DTC P0131 [L3].)
P0132	Front HO2S circuit high input	ON	2	HO2S	C, O, R	×	(See 01–02A–92 DTC P0132 [L3].)
P0133	Front HO2S circuit problem	ON	2	HO2S	C	×	(See 01–02A–96 DTC P0133 [L3].)
P0134	Front HO2S circuit no activity detected	ON	2	HO2S	C, R	×	(See 01–02A–100 DTC P0134 [L3].)
P0137*3	Rear HO2S circuit low input	ON	2	HO2S	C, O, R	×	(See 01–02A–104 DTC P0137 [L3].)
P0138	Middle*2/Rear*3 HO2S circuit high input	ON	2	HO2S	C, O, R	×	(See 01–02A–107 DTC P0138 [L3].)
P0139	Middle*1/Rear*2 HO2S circuit malfunction	ON	2	HO2S	C	×	(See 01–02A–109 DTC P0139 [L3].)

DTC No.	Condition	MIL	DC	Monitor item	Self-test type*1	Memory function	Page
P0140*3	Rear HO2S circuit no activity detected	ON	2	HO2S	C, R	×	(See 01–02A–113 DTC P0140 [L3].)
P0144*2	Rear HO2S circuit high input	ON	2	HO2S	C, O, R	×	(See 01–02A–116 DTC P0144 [L3].)
P0171*2	Fuel trim system too lean	ON	2	Fuel system	C, R	×	(See 01–02A–118 DTC P0171 [L3].)
P0172*2	Fuel trim system too rich	ON	2	Fuel system	C, R	×	(See 01–02A–120 DTC P0172 [L3].)
P0222	TP sensor No.2 circuit low input	ON	1	CCM	C, O, R	×	(See 01–02A–123 DTC P0222 [L3].)
P0223	TP sensor No.2 circuit high input	ON	1	CCM	C, O, R	×	(See 01–02A–125 DTC P0223 [L3].)
P0300	Random misfire detected	Flash / ON	1 or 2	Misfire	C, R	×	(See 01–02A–127 DTC P0300 [L3].)
P0301	Cylinder No.1 misfire detected	Flash / ON	1 or 2	Misfire	C, R	×	(See 01–02A–130 DTC P0301, P0302, P0303, P0304 [L3].)
P0302	Cylinder No.2 misfire detected	Flash / ON	1 or 2	Misfire	C, R	×	(See 01–02A–130 DTC P0301, P0302, P0303, P0304 [L3].)
P0303	Cylinder No.3 misfire detected	Flash / ON	1 or 2	Misfire	C, R	×	(See 01–02A–130 DTC P0301, P0302, P0303, P0304 [L3].)
P0304	Cylinder No.4 misfire detected	Flash / ON	1 or 2	Misfire	C, R	×	(See 01–02A–130 DTC P0301, P0302, P0303, P0304 [L3].)
P0327	Knock sensor circuit low input	ON	1	CCM	C, O, R	×	(See 01–02A–132 DTC P0327 [L3].)
P0328	Knock sensor circuit high input	ON	1	CCM	C, O, R	×	(See 01–02A–134 DTC P0328 [L3].)
P0335	CKP sensor circuit malfunction	ON	1	CCM	C	×	(See 01–02A–136 DTC P0335 [L3].)
P0340	CMP sensor circuit malfunction	ON	1	CCM	C	×	(See 01–02A–139 DTC P0340 [L3].)
P0401	EGR flow insufficient detected	ON	2	EGR	C, R	×	(See 01–02A–142 DTC P0401 [L3].)
P0403	EGR valve (stepper motor) circuit malfunction	ON	2	CCM	C, O, R	×	(See 01–02A–144 DTC P0403 [L3].)
P0420*3	Catalyst system efficiency below threshold	ON	2	Catalyst	C	×	(See 01–02A–147 DTC P0420 [L3].)

DTC No.	Condition	MIL	DC	Monitor item	Self-test type*1	Memory function	Page
0421*2	Catalyst system efficiency below threshold	ON	2	Catalyst	C	×	(See 01–02A–148 DTC P0421 [L3].)
P0441	EVAP control system incorrect purge flow	ON	2	EVAP system monitor	C, R	×	(See 01–02A–150 DTC P0441 [L3].)
P0442	EVAP control system leak detected (small leak)	ON	2	EVAP system monitor	C, R	×	(See 01–02A–152 DTC P0442 [L3].)
P0443	EVAP control system purge control valve circuit malfunction	ON	2	CCM	C, O, R	×	(See 01–02A–154 DTC P0443 [L3].)
P0446	Change over valve (COV) (EVAP system leak detection pump) stuck close	ON	2	CCM	C, R	×	(See 01–02A–156 DTC P0446 [L3].)
P0455	EVAP control system leak detected (gross leak)	ON	2	EVAP system monitor	C, R	×	(See 01–02A–157 DTC P0455 [L3].)
P0456*4	EVAP control system leak detected (very small leak)	ON	2	EVAP system monitor	C, R	×	(See 01–02A–160 DTC P0456 [L3].)
P0461	Fuel gauge sender unit circuit range/ performance	ON	2	CCM	C	×	(See 01–02A–162 DTC P0461 [L3].)
P0462	Fuel gauge sender unit circuit low input	ON	2	CCM	C, O, R	×	(See 01–02A–163 DTC P0462 [L3].)
P0463	Fuel gauge sender unit circuit high input	ON	2	CCM	C, O, R	×	(See 01–02A–164 DTC P0463 [L3].)
P0480	Fan relay No.1 control circuit malfunction	OFF	1	CCM	C, O, R	×	(See 01–02A–165 DTC P0480 [L3].)
P0481	Fan relay No.2 and No.3 control circuit malfunction	OFF	1	CCM	C, O, R	×	(See 01–02A–167 DTC P0481 [L3].)
P0482	Fan relay No.4 control circuit malfunction	OFF	1	Other	C, O, R	×	(See 01–02A–170 DTC P0482 [L3].)
P0500	Vehicle speed sensor (VSS) circuit malfunction	ON	2	CCM	C	×	(See 01–02A–172 DTC P0500 [L3].)
P0505	Idle control system malfunction	OFF	—	—	R	—	(See 01–02A–175 DTC P0505 [L3].)
P0506	Idle control system RPM lower than expected	ON	2	CCM	C	×	(See 01–02A–176 DTC P0506 [L3].)
P0507	Idle control system RPM higher than expected	ON	2	CCM	C	×	(See 01–02A–178 DTC P0507 [L3].)
P0550	PSP switch circuit malfunction	ON	2	CCM	C	×	(See 01–02A–179 DTC P0550 [L3].)
P0564	Cruise control switch circuit malfunction	OFF	1	Other	C	×	(See 01–02A–181 DTC P0564 [L3].)
P0571	Brake switch circuit malfunction	OFF	1	Other	C	×	(See 01–02A–183 DTC P0571 [L3].)

DTC No.	Condition	MIL	DC	Monitor item	Self-test type*1	Memory function	Page
P0601	Internal control module memory check sum error	ON	1	CCM	C, O, R	×	(See 01–02A–185 DTC P0601 [L3].)
P0602	PCM programming error	ON	1	CCM	C, O, R	×	(See 01–02A–186 DTC P0602 [L3].)
P0604	PCM RAM error	ON	1	CCM	C, O, R	×	(See 01–02A–187 DTC P0604 [L3].)
P0606	PCM processor	ON	1	CCM	C, O, R	×	(See 01–02A–188 DTC P0606 [L3].)
P0607*3	Control module performance	OFF	1	Other	C, O, R	×	(See 01–02A–189 DTC P0607 [L3].)
P0610	Control module vehicle options error	ON	1	CCM	C, O, R	×	(See 01–02A–190 DTC P0610 [L3].)
P0638	Throttle actuator control range/ performance	ON	1	CCM	C	×	(See 01–02A–191 DTC P0638 [L3].)
P0661	Variable intake air solenoid valve circuit low input	OFF	1	Other	C, O, R	×	(See 01–02A–192 DTC P0661 [L3].)
P0662	Variable intake-air system solenoid valve circuit high input	OFF	1	Other	C, O, R	×	(See 01–02A–194 DTC P0662 [L3].)
P0703	Brake switch No.1 circuit malfunction	ON	2	CCM	C	×	(See 01–02A–196 DTC P0703 [L3].)
P0704*5	Clutch switch circuit malfunction	ON	2	CCM	C	×	(See 01–02A–198 DTC P0704 [L3].)
P0850*5	Neutral switch circuit malfunction	ON	2	CCM	C	×	(See 01–02A–200 DTC P0850 [L3].)
P2004	Variable tumble shutter valve stuck open	ON	2	CCM	C, R	×	(See 01–02A–203 DTC P2004 [L3].)
P2006	Variable tumble shutter valve stuck closed	ON	2	CCM	C, R	×	(See 01–02A–206 DTC P2006 [L3].)
P2009	Variable tumble solenoid valve circuit low input	ON	2	CCM	C, O, R	×	(See 01–02A–208 DTC P2009 [L3].)
P2010	Variable tumble solenoid valve circuit high input	ON	2	CCM	C, O, R	×	(See 01–02A–210 DTC P2010 [L3].)
P2088	OCV actuator circuit low	ON	1	CCM	C, O, R	×	(See 01–02A–212 DTC P2088 [L3].)
P2089	OCV actuator circuit high	ON	1	CCM	C, O, R	×	(See 01–02A–214 DTC P2089 [L3].)
P2096	Target A/F feedback system too lean	ON	2	Fuel system	C	×	(See 01–02A–216 DTC P2096 [L3].)
P2097	Target A/F feedback system too rich	ON	2	Fuel system	C	×	(See 01–02A–219 DTC P2097 [L3].)

DTC No.	Condition	MIL	DC	Monitor item	Self-test type*1	Memory function	Page
2100*3	Throttle actuator circuit open	ON	1	CCM	C, O, R	×	(See 01–02A–221 DTC P2100 [L3].)
P2101	Throttle actuator circuit range/performance	ON	1	CCM	C, R	×	(See 01–02A–223 DTC P2101 [L3].)
P2102*3	Throttle actuator circuit low input	ON	1	CCM	C, O, R	×	(See 01–02A–226 DTC P2102 [L3].)
P2103*3	Throttle actuator circuit high input	ON	1	CCM	C, O, R	×	(See 01–02A–228 DTC P2103 [L3].)
P2107	Throttle actuator control module processor problem	ON	1	CCM	C, R	×	(See 01–02A–230 DTC P2107 [L3].)
P2108	Throttle actuator control module performance problem	ON	1	CCM	C, R	×	(See 01–02A–231 DTC P2108 [L3].)
P2109*2	TP sensor minimum stop range/performance problem	ON	1	CCM	C, R	×	(See 01–02A–233 DTC P2109 [L3].)
P2112*2	Throttle actuator control system range/performance problem	ON	1	CCM	C, R	×	(See 01–02A–234 DTC P2112 [L3].)
P2119	Throttle actuator control throttle body range/performance	ON	2	CCM	C, R	×	(See 01–02A–235 DTC P2119 [L3].)
P2122	Accelerator pedal position (APP) sensor No.1 circuit low input	ON	1	CCM	C, O, R	×	(See 01–02A–236 DTC P2122 [L3].)
P2123	Accelerator pedal position (APP) sensor No.1 circuit high input	ON	1	CCM	C, O, R	×	(See 01–02A–238 DTC P2123 [L3].)
P2127	Accelerator pedal position (APP) sensor No.2 circuit low input	ON	1	CCM	C, O, R	×	(See 01–02A–240 DTC P2127 [L3].)
P2128	Accelerator pedal position (APP) sensor No.2 circuit high input	ON	1	CCM	C, O, R	×	(See 01–02A–242 DTC P2128 [L3].)
P2135	Throttle position sensor No.1/No.2 voltage correlation problem	ON	1	CCM	C, O, R	×	(See 01–02A–244 DTC P2135 [L3].)
P2138	Accelerator pedal position (APP) sensor No.1/No.2 voltage correlation problem	ON	1	CCM	C, O, R	×	(See 01–02A–245 DTC P2138 [L3].)
P2177*3	Fuel system too lean at off idle	ON	2	Fuel system	C, R	×	(See 01–02A–246 DTC P2177 [L3].)
P2178*3	Fuel system too rich at off idle	ON	2	Fuel system	C, R	×	(See 01–02A–248 DTC P2178 [L3].)
P2187*3	Fuel system too lean at idle	ON	2	Fuel system	C, R	×	(See 01–02A–250 DTC P2187 [L3].)
P2188*3	Fuel system too rich at idle	ON	2	Fuel system	C, R	×	(See 01–02A–253 DTC P2188 [L3].)
P2195	Front HO2S signal stuck lean	ON	2	HO2S	C	×	(See 01–02A–255 DTC P2195 [L3].)

DTC No.	Condition	MIL	DC	Monitor item	Self-test type*1	Memory function	Page
P2196	Front HO2S signal stuck rich	ON	2	HO2S	C	×	(See 01–02A–259 DTC P2196 [L3].)
P2228	BARO sensor circuit low input	ON	1	CCM	C, O, R	×	(See 01–02A–263 DTC P2228 [L3].)
P2229	BARO sensor circuit high input	ON	1	CCM	C, O, R	×	(See 01–02A–264 DTC P2229 [L3].)
P2237*3	Front HO2S positive current control circuit open	ON	2	HO2S	C, O, R	×	(See 01–02A–265 DTC P2237 [L3].)
P2251*3	Front HO2S negative current control circuit open	ON	2	HO2S	C, O, R	×	(See 01–02A–267 DTC P2251 [L3].)
P2270*2	Middle HO2S signal stuck lean	ON	2	HO2S	C	×	(See 01–02A–269 DTC P2270 [L3].)
P2271*2	Middle HO2S signal stuck rich	ON	2	HO2S	C	×	(See 01–02A–271 DTC P2271 [L3].)
P2274*2	Rear HO2S signal stuck lean	ON	2	HO2S	C	×	(See 01–02A–273 DTC P2274 [L3].)
P2275*2	Rear HO2S signal stuck rich	ON	2	HO2S	C	×	(See 01–02A–275 DTC P2275 [L3].)
P2401	EVAP system leak detection pump motor circuit low	ON	2	CCM	C, R	×	(See 01–02A–277 DTC P2401 [L3].)
P2402	EVAP system leak detection pump motor circuit high	ON	2	CCM	C, R	×	(See 01–02A–280 DTC P2402 [L3].)
P2404	EVAP system leak detection pump sensor circuit malfunction	ON	2	CCM	C, R	×	(See 01–02A–282 DTC P2404 [L3].)
P2405	EVAP system leak detection pump sensor circuit low input	ON	2	CCM	C, R	×	(See 01–02A–283 DTC P2405 [L3].)
P2407	EVAP system leak detection pump sensor circuit intermittent	ON	2	CCM	C, R	×	(See 01–02A–284 DTC P2407 [L3].)
P2502	Generator terminal B circuit open	OFF	1	–	C, R	×	(See 01–02A–285 DTC P2502 [L3].)
P2503	Generator output voltage signal no electricity	OFF	1	Other	C, R	×	(See 01–02A–287 DTC P2503 [L3].)
P2504	Battery overcharge	OFF	1	Other	C, R	×	(See 01–02A–289 DTC P2504 [L3].)
P2507	PCM +BB (back-up battery) voltage low	ON	1	CCM	C, O, R	×	(See 01–02A–291 DTC P2507 [L3].)
P2610	PCM internal engine off timer performance	ON	2	CCM	C	×	(See 01–02A–293 DTC P2610 [L3].)
P2676	Variable air duct (VAD) solenoid valve circuit low input	OFF	1	Other	C, O, R	×	(See 01–02A–294 DTC P2676 [L3].)

DTC No.	Condition	MIL	DC	Monitor item	Self-test type*1	Memory function	Page
P2677	Variable air duct (VAD) solenoid valve circuit high input	OFF	1	Other	C, O, R	×	(See 01–02A–296 DTC P2677 [L3].)
U0073	CAN system communication error	(See 09–02A–4 DTC TABLE [MULTIPLEX COMMUNICATION SYSTEM (L3, AJ)])					
U0101*6	Communication error to TCM	(See 09–02A–4 DTC TABLE [MULTIPLEX COMMUNICATION SYSTEM (L3, AJ)])					
U0121	Communication error to ABS HU/CM	(See 09–02A–4 DTC TABLE [MULTIPLEX COMMUNICATION SYSTEM (L3, AJ)])					
U0155	Communication error to instrument cluster	(See 09–02A–4 DTC TABLE [MULTIPLEX COMMUNICATION SYSTEM (L3, AJ)])					

*1 : C; CMDTC self test, O; KOEO selftest, R; KOER selftest
*2 : California emission regulation applicable ATX model
*3 : Except for California emission regulation applicable ATX model
*4 : California emission regulation applicable model
*5 : MTX model
*6 : ATX model

DTC B1342 [L3]

E6U010208888W01

DTC B1342	PCM malfunction
DETECTION CONDITION	• Malfunction in the PCM internal circuit.
POSSIBLE CAUSE	• PCM internal malfunction

Diagnostic procedure

STEP	INSPECTION		ACTION
1	**VERIFY CURRENT STATUS OF MALFUNCTION** • Clear the DTC from the PCM memory using the WDS or equivalent. • Is same DTC present?	Yes	Replace the PCM, then go to the next step. (See 01–40A–9 PCM REMOVAL/INSTALLATION [L3].)
		No	Go to the next step.
2	**VERIFY AFTER REPAIR PROCEDURE** • Perform the "AFTER REPAIR PROCEDURE". (See 01–02A–12 AFTER REPAIR PROCEDURE [L3].) • Are any DTC present?	Yes	Go to the applicable DTC inspection. (See 01–02A–18 DTC TABLE [L3].)
		No	Troubleshooting completed.

DTC P0011 [L3]

E6U010200001W01

DTC P0011	CMP Timing over-advanced
DETECTION CONDITION	**California emission regulation applicable ATX model** • Actual valve timing is over-advanced by **10 ° (when the following conditions are met)** from target valve timing when the OCV is controlled in the maximum valve timing retard condition. **MONITORING CONDITION** — Engine coolant temperature is **above 20 °C {68 °F}**. **Diagnostic support note** • This is a continuous monitor (CCM). • MIL illuminates if PCM detects the above malfunction condition during first drive cycle. • PENDING CODE is available if PCM detects the above malfunction condition. • FREEZE FRAME DATA is available. • DTC is stored in the PCM memory.
	Except for California emission regulation applicable ATX model • Actual valve timing is over-advanced by **15 °** (when the following conditions are met) from target valve timing when the OCV is controlled in the maximum valve timing retard condition. **MONITORING CONDITION** — Engine speed is **below 4,000 rpm**. — Engine coolant temperature is **above 70—110 °C {158—230 °F}**. **Diagnostic support note** • This is a continuous monitor (CCM). • MIL illuminates if PCM detects the above malfunction condition during first drive cycle. • PENDING CODE is available if PCM detects the above malfunction condition. • FREEZE FRAME DATA is available. • DTC is stored in the PCM memory.
POSSIBLE CAUSE	• OCV malfunction • Spool valve in OCV is stuck in advance position. • Variable valve timing actuator is stuck in advance position. • Loose timing chain or improper valve timing due to timing chain slippage • PCM malfunction

Diagnostic procedure

STEP	INSPECTION		ACTION
1	**VERIFY FREEZE FRAME DATA HAS BEEN RECORDED** • Has FREEZE FRAME DATA been recorded?	Yes	Go to the next step.
		No	Record FREEZE FRAME DATA on repair order, then go to the next step.
2	**VERIFY RELATED REPAIR INFORMATION AVAILABILITY** • Check for related Service Bulletins and/or on-line repair information availability. • Is any related repair information available?	Yes	Perform repair or diagnosis according to the available repair information. • If the vehicle is not repaired, go to the next step.
		No	Go to the next step.
3	**INSPECT OCV FOR MALFUNCTION** • Start engine. • Increase engine speed. • Stop engine. • Remove the OCV. • Inspect the position of spool valve in OCV. • Is spool valve located at valve retard position?	Yes	Go to the next step.
		No	Replace OCV, then go to Step 6.
4	**INSPECT STOPPER PIN MECHANISM** • Remove timing chain. • Inspect stopper pin. (See 01–10A–30 VARIABLE VALVE TIMING ACTUATOR INSPECTION [L3].) • Is stopper pin mechanism normal?	Yes	Go to the next step.
		No	Replace variable valve timing actuator, then go to Step 6.
5	**INSPECT ROTOR POSITION** • Remove variable valve timing actuator. • Is rotor position at maximum valve timing retard?	Yes	**VARIABLE VALVE TIMING MECHANISM IS NORMAL** **Note** • This DTC detected by intermittent concern. • Intermittent concern might be removed by cleaning mode of variable valve timing control function. Go to the next step.
		No	Replace variable valve timing actuator, go to the next step.
6	**VERIFY TROUBLESHOOTING OF DTC P0011 COMPLETED** • Make sure to reconnect all disconnected connectors. • Clear the DTC from the PCM memory using the WDS or equivalent. • Turn the ignition switch off. • Start engine and warm it up completely. • Is PENDING CODE for this DTC present?	Yes	Replace PCM, then go to the next step. (See 01–40A–9 PCM REMOVAL/INSTALLATION [L3].)
		No	Go to the next step.
7	**VERIFY AFTER REPAIR PROCEDURE** • Perform the "After Repair Procedure". (See 01–02A–12 AFTER REPAIR PROCEDURE [L3].) • Is any DTC present?	Yes	Go to the applicable DTC inspection. (See 01–02A–18 DTC TABLE [L3].)
		No	Troubleshooting completed.

DTC P0012 [L3]

E6U010200001W02

DTC P0012	CMP Timing over-retarded
DETECTION CONDITION	**California emission regulation applicable ATX model** • Actual valve timing is over-retarded by **10** ° (when the following conditions are met) from target valve timing for **5 s** when the OCV system control is within feed-back range. **MONITORING CONDITION** — Engine coolant temperature is **above 20 °C {68 °F}**. **Diagnostic support note** • This is a continuous monitor (CCM). • MIL illuminates if PCM detects above malfunction condition in two consecutive drive cycles or in one drive cycle while DTC for the same malfunction has been stored in PCM. • PENDING CODE is available if PCM detects the above malfunction condition during first drive cycle. • FREEZE FRAME DATA is available. • DTC is stored in the PCM memory.
	Except for California emission regulation applicable ATX model • Actual valve timing is over-retarded by **10** ° (when the following conditions are met) from target valve timing for **5 s** when the OCV system control is within feed-back range. **MONITORING CONDITION** — Engine speed is **below 4,000 rpm**. — Engine coolant temperature is **above 70—110 °C {158—230 °F}**. **Diagnostic support note** • This is a continuous monitor (CCM). • MIL illuminates if PCM detects above malfunction condition in two consecutive drive cycles or in one drive cycle while DTC for the same malfunction has been stored in PCM. • PENDING CODE is available if PCM detects the above malfunction condition during first drive cycle. • FREEZE FRAME DATA is available. • DTC is stored in the PCM memory.
POSSIBLE CAUSE	• OCV (oil control valve) malfunction • Low engine oil pressure • Spool valve in OCV (oil control valve) is stuck in retard position. • Variable valve timing actuator is stuck in retard position. • Following oil runners are clogged or have leakage. **Oil runners** • Between oil pressure switch and OCV (oil control valve) • Between OCV (oil control valve) and variable valve timing actuator • In variable valve timing actuator • Loose timing chain or improper valve timing due to timing chain slippage • PCM malfunction

Diagnostic procedure

STEP	INSPECTION		ACTION
1	**VERIFY FREEZE FRAME DATA HAS BEEN RECORDED** • Has FREEZE FRAME DATA been recorded?	Yes	Go to the next step.
		No	Record FREEZE FRAME DATA on repair order, then go to the next step.
2	**VERIFY RELATED REPAIR INFORMATION AVAILABILITY** • Check for related Service Bulletins and/or on-line repair information availability. • Is any related repair information available?	Yes	Perform repair or diagnosis according to the available repair information. • If the vehicle is not repaired, go to the next step.
		No	Go to the next step.
3	**VERIFY RELATED PENDING CODE OR STORED DTCS** • Is DTC P2088 or P2089 present?	Yes	Go to appropriate DTC troubleshooting procedure. (See 01–02A–212 DTC P2088 [L3] or 01–02A–214 DTC P2089 [L3].)
		No	Go to the next step.
4	**VERIFY ENGINE OIL PRESSURE** • Start engine. • Does oil pressure warning light illuminate?	Yes	Inspect engine oil pressure. (See 01–11A–5 OIL PRESSURE INSPECTION [L3, AJ].)
		No	Go to the next step.
5	**VERIFY TIMING CHAIN INSTALLATION** • Stop engine. • Remove timing chain cover. • Is camshaft timing mark at correct point? (See 01–10A–9 TIMING CHAIN REMOVAL/INSTALLATION [L3].)	Yes	Go to the next step.
		No	Reinstall timing chain, then go to Step 8.
6	**INSPECT OCV FOR MALFUNCTION** • Stop engine. • Remove OCV. • Inspect position of spool valve in OCV. • Is spool valve located at valve retard position?	Yes	**VARIABLE VALVE TIMING MECHANISM IS NORMAL** **Note** • This DTC detected by intermittent concern. • Intermittent concern might be removed by cleaning mode of variable valve timing control function. Go to the next step.
		No	Replace OCV, then go to Step 8.
7	**INSPECT ENGINE OIL RUNNER** • Inspect following engine oil runners for clogging or leakage. — Between oil pressure switch and OCV — Between OCV and variable valve timing actuator — In variable valve timing actuator • Is there any clogging or leakage?	Yes	Repair or replace suspected runner, then go to the next step.
		No	**VARIABLE VALVE TIMING MECHANISM IS NORMAL** **Note** • This DTC is detected by intermittent concern. • Intermittent concern might be removed by cleaning mode of variable valve timing control function. Go to the next step.
8	**VERIFY TROUBLESHOOTING OF DTC P0012 COMPLETED** • Make sure to reconnect all disconnected connectors. • Clear the DTC from the PCM memory using the WDS or equivalent. • Turn the ignition switch off. • Start engine and warm it up completely. • Is PENDING CODE for this DTC present?	Yes	Replace PCM, then go to the next step. (See 01–40A–9 PCM REMOVAL/INSTALLATION [L3].)
		No	Go to the next step.
9	**VERIFY AFTER REPAIR PROCEDURE** • Perform the "After Repair Procedure". (See 01–02A–12 AFTER REPAIR PROCEDURE [L3].) • Is any DTC present?	Yes	Go to the applicable DTC inspection. (See 01–02A–18 DTC TABLE [L3].)
		No	Troubleshooting completed.

DTC P0016 [L3]

E6U010200001W13

DTC P0016	CKP-CMP correlation
DETECTION CONDITION	• The PCM monitors the input pulses from the CKP sensor and CMP sensor. If the input pulse pick-up timing do not match each other, the PCM determines that the camshaft position does not coincide with the crankshaft position. **Diagnostic support note** • This is a continuous monitor (CCM). • The MIL illuminates if the PCM detects the above malfunction condition in two consecutive drive cycles or in one drive cycle while the DTC for the same malfunction has been stored in the PCM. • PENDING CODE is available if the PCM detects the above malfunction condition during the first drive cycle. • FREEZE FRAME DATA is available. • The DTC is stored in the PCM memory.
POSSIBLE CAUSE	• Poor connection of connector • CMP sensor malfunction • CKP sensor malfunction • Damaged or scratched CMP sensor pulse wheel • Damaged or scratched CKP sensor pulse wheel • Foreign material on CMP sensor • Foreign material on CKP sensor • Improper valve timing

Diagnostic procedure

STEP	INSPECTION		ACTION
1	**VERIFY FREEZE FRAME DATA HAS BEEN RECORDED** • Has FREEZE FRAME DATA been recorded?	Yes	Go to the next step.
		No	Record the FREEZE FRAME DATA on the repair order, then go to the next step.
2	**VERIFY RELATED REPAIR INFORMATION AVAILABILITY** • Verify related Service Bulletins and/or on-line repair information availability. • Is any related repair information available?	Yes	Perform repair or diagnosis according to the available repair information. • If the vehicle is not repaired, go to the next step.
		No	Go to the next step.
3	**INSPECT CMP SENSOR CONNECTOR FOR POOR CONNECTION** • Turn the ignition switch off. • Disconnect the CMP sensor connector. • Inspect for poor connection (such as damaged/ pulled-out pins, corrosion). • Is there any malfunction?	Yes	Repair or replace the terminal, then go to Step 13.
		No	Go to the next step.
4	**INSPECT CMP SENSOR FOR FOREIGN MATERIAL** • Remove the CMP sensor. • Inspect the CMP sensor for foreign materials. • Is there any foreign material on the CMP sensor?	Yes	Remove foreign material from the CMP sensor, then go to Step 13.
		No	Go to the next step.
5	**INSPECT CMP SENSOR PULSE WHEEL** • Visually inspect the CMP sensor pulse wheel. • Are there any damage or scratches at the CMP sensor pulse wheel?	Yes	Replace the camshaft, then go to Step 13. (See 01–10A–18 CYLINDER HEAD GASKET REPLACEMENT [L3].)
		No	Go to the next step.
6	**INSPECT CMP SENSOR** • Inspect the CMP sensor. (See 01–40A–48 CAMSHAFT POSITION (CMP) SENSOR INSPECTION [L3].) • Is the CMP sensor normal?	Yes	Go to the next step.
		No	Replace the CMP, then go to Step 13.
7	**INSPECT CKP SENSOR CONNECTOR FOR POOR CONNECTION** • Turn the ignition switch off. • Disconnect the CKP sensor connector. • Inspect for poor connection (such as damaged/ pulled-out pins, corrosion). • Is there any malfunction?	Yes	Repair or replace the terminal, then go to Step 13.
		No	Go to the next step.

STEP	INSPECTION		ACTION
8	**INSPECT CKP SENSOR FOR FOREIGN MATERIAL** • Remove the CKP sensor. • Inspect the CKP sensor for foreign material. • Is there any foreign material on the CKP sensor?	Yes	Remove foreign material from the CKP sensor, then go to Step 13.
		No	Go to the next step.
9	**INSPECT CKP SENSOR PULSE WHEEL** • Visually inspect the CKP sensor pulse wheel. • Are there any damage or scratches on the CKP sensor pulse wheel?	Yes	Replace the CKP sensor pulse wheel, then go to Step 13. (See 01–10A–9 TIMING CHAIN REMOVAL/ INSTALLATION [L3].)
		No	Go to the next step.
10	**INSPECT CKP SENSOR** • Inspect the CKP sensor. (See 01–40A–46 CRANKSHAFT POSITION (CKP) SENSOR INSPECTION [L3].) • Is the CKP sensor normal?	Yes	Go to the next step.
		No	Replace the CKP sensor, then go to Step 13. (See 01–40A–45 CRANKSHAFT POSITION (CKP) SENSOR REMOVAL/INSTALLATION [L3].)
11	**INSPECT PCM CONNECTOR FOR POOR CONNECTION** • Turn the ignition switch off. • Disconnect the PCM sensor connector. • Inspect for poor connection (such as damaged/ pulled-out pins, corrosion). • Is there any malfunction?	Yes	Repair or replace the terminal, then go to Step 13.
		No	Go to the next step.
12	**INSPECT VALVE TIMING** • Inspect valve timing. (See 01–10A–9 TIMING CHAIN REMOVAL/INSTALLATION [L3].) • Is valve timing normal?	Yes	Go to the next step.
		No	Adjust the valve timing properly, then go to the next step. (See 01–10A–9 TIMING CHAIN REMOVAL/ INSTALLATION [L3].)
13	**VERIFY TROUBLESHOOTING OF DTC P0016 COMPLETED** • Make sure to reconnect all disconnected connectors. • Turn the ignition switch to the ON position. • Clear the DTC from the PCM memory using the WDS or equivalent. • Start the engine and run it at the idle. • Retrieve the DTC using the WDS or equivalent. • Is the PENDING CODE for this DTC present?	Yes	Replace PCM, then go to the next step. (See 01–40A–9 PCM REMOVAL/INSTALLATION [L3].)
		No	Go to the next step.
14	**VERIFY AFTER REPAIR PROCEDURE** • Perform "AFTER REPAIR PROCEDURE". (See 01–02A–12 AFTER REPAIR PROCEDURE [L3].) • Is there any DTC present?	Yes	Go to applicable DTC inspection. (See 01–02A–18 DTC TABLE [L3].)
		No	Troubleshooting completed.

DTC P0030 [L3]

E6U010200001W10

California Emission Regulation Applicable ATX Model

DTC P0030	Front HO2S heater control circuit problem
DETECTION CONDITION	• The PCM monitors the front HO2S impedance when under the front HO2S heater control for **200 s**. If the impedance is **more than 44 ohms**, the PCM determines that there is a front HO2S heater control circuit problem. **Diagnostic support note** • This is an intermittent monitor (HO2S heater). • The MIL illuminates if the PCM detects the above malfunction condition in two consecutive drive cycles or in one drive cycle while the DTC for the same malfunction has been stored in the PCM. • PENDING CODE is available if the PCM detects the above malfunction condition during the first drive cycle. • FREEZE FRAME DATA is available. • The DTC is stored in the PCM memory.
POSSIBLE CAUSE	• Front HO2S heater malfunction • Connector or terminal malfunction • PCM malfunction

Diagnostic procedure

STEP	INSPECTION		ACTION
1	**VERIFY FREEZE FRAME DATA AND DIAGNOSTIC MONITORING TEST RESULTS HAVE BEEN RECORDED** • Have FREEZE FRAME DATA and DIAGNOSTIC MONITORING TEST RESULTS (HO2S heater related) been recorded?	Yes	Go to the next step.
		No	Record the FREEZE FRAME DATA and DIAGNOSTIC MONITORING TEST RESULTS on the repair order, then go to the next step.
2	**VERIFY RELATED REPAIR INFORMATION AVAILABILITY** • Verify related Service Bulletins and/or on-line repair information availability. • Is any related repair information available?	Yes	Perform repair or diagnosis according to the available repair information. • If the vehicle is not repaired, go to the next step.
		No	Go to the next step.
3	**VERIFY RELATED PENDING CODE OR STORED DTC** • Turn the ignition switch off, then to the ON position (Engine off). • Verify the related PENDING CODE or stored DTCs. • Are other DTCs present?	Yes	Go to the appropriate DTC inspection. (See 01–02A–18 DTC TABLE [L3].)
		No	Go to the next step.
4	**INSPECT FRONT HO2S CONNECTOR FOR POOR CONNECTION** • Turn the ignition switch off. • Disconnect the front HO2S connector. • Inspect for poor connection (such as damaged/ pulled-out pins, and corrosion). • Is there any malfunction?	Yes	Repair or replace the terminal, then go to Step 7.
		No	Go to the next step.
5	**INSPECT FRONT HO2S HEATER** • Inspect the front HO2S heater. (See 01–40A–37 HEATED OXYGEN SENSOR (HO2S) INSPECTION [L3].) • Is there any malfunction?	Yes	Replace the front HO2S, then go to Step 7. (See 01–15A–5 HO2S Removal Note.)
		No	Go to the next step.
6	**INSPECT PCM CONNECTOR FOR POOR CONNECTION** • Turn the ignition switch off. • Disconnect the PCM connector. • Inspect for poor connection (such as damaged/ pulled-out pins, and corrosion). • Is there any malfunction?	Yes	Repair or replace the terminal, then go to the next step.
		No	Go to the next step.

STEP	INSPECTION		ACTION
7	**VERIFY TROUBLESHOOTING OF DTC P0030 COMPLETED** • Make sure to reconnect all disconnected connectors. • Clear the DTC from the PCM memory using the WDS or equivalent. • Perform the KOEO self-test (using WDS or equivalent) or the HO2S heater, HO2S, and TWC Repair Verification Drive Mode (not using WDS or equivalent). (See 01–02A–12 KOEO/KOER SELF TEST [L3].) (See 01–02A–13 OBD-II DRIVE MODE [L3].) • Is the PENDING CODE for this DTC present?	Yes	Replace the PCM, then go to the next step. (See 01–40A–9 PCM REMOVAL/INSTALLATION [L3].)
		No	Go to the next step.
8	**VERIFY AFTER REPAIR PROCEDURE** • Perform the "AFTER REPAIR PROCEDURE". (See 01–02A–12 AFTER REPAIR PROCEDURE [L3].) • Are any DTCs present?	Yes	Go to the applicable DTC inspection. (See 01–02A–18 DTC TABLE [L3].)
		No	DTC troubleshooting completed.

Except for California Emission Regulation Applicable ATX Model

DTC P0030	Front HO2S heater control circuit problem
DETECTION CONDITION	• OBD system monitors the output signal voltage from oxygen sensor which is proportion to the element impedance of oxygen sensor. • If the output signal voltage isn't between **0.75 V** and **1.5 V** after specified time from engine start, heater performance considered failed. **MONITORING CONDITIONS** — Battery voltage: **10—18 V** — Time from engine start is **74 s or more** **Diagnostic support note** • This is an intermittent monitor (HO2S heater). • The MIL illuminates if the PCM detects the above malfunction condition in two consecutive drive cycles or in one drive cycle while the DTC for the same malfunction has been stored in the PCM. • PENDING CODE is available if the PCM detects the above malfunction condition during the first drive cycle. • FREEZE FRAME DATA is available. • The DTC is stored in the PCM memory.
POSSIBLE CAUSE	• Front HO2S heater malfunction • Connector or terminal malfunction • Short to ground in wiring harness between front HO2S terminal C*1, 2D*2 and PCM terminal 2BG • Short to power supply in wiring harness between front HO2S terminal C*1, 2D*2 and PCM terminal 2BG • Open circuit in wiring harness between front HO2S terminal 1B*2 and PCM terminal 2AC*2 • Open circuit in wiring harness between front HO2S terminal C*1, 2D*2 and PCM terminal 2BG • PCM malfunction

DTC P0030	Front HO2S heater control circuit problem

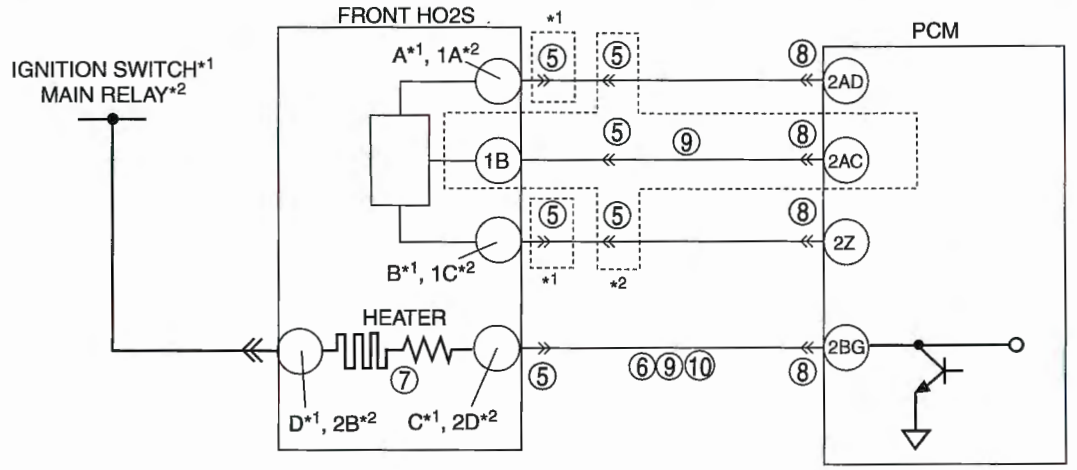

FRONT HO2S*1
WIRING HARNESS-SIDE CONNECTOR

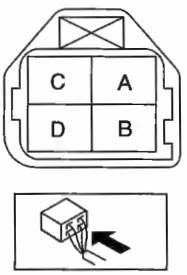

PCM
WIRING HARNESS-SIDE CONNECTOR

2BE	2BA	2AW	2AS	2AO	2AK	2AG	2AC	2Y	2U	2Q	2M	2I	2E	2A
2BF	2BB	2AX	2AT	2AP	2AL	2AH	2AD	2Z	2V	2R	2N	2J	2F	2B
2BG	2BC	2AY	2AU	2AQ	2AM	2AI	2AE	2AA	2W	2S	2O	2K	2G	2C
2BH	2BD	2AZ	2AV	2AR	2AN	2AJ	2AF	2AB	2X	2T	2P	2L	2H	2D

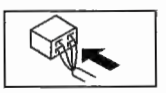

FRONT HO2S*2
WIRING HARNESS-SIDE CONNECTOR

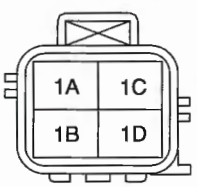

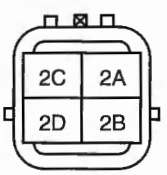

*1 : California Emission Regulation Applicable ATX Model
*2 : Except for California Emission Regulation Applicable ATX Model

Diagnostic procedure

STEP	INSPECTION		ACTION
1	**VERIFY FREEZE FRAME DATA AND DIAGNOSTIC MONITORING TEST RESULTS HAVE BEEN RECORDED** • Have FREEZE FRAME DATA and DIAGNOSTIC MONITORING TEST RESULTS (HO2S heater related) been recorded?	Yes	Go to the next step.
		No	Record the FREEZE FRAME DATA and DIAGNOSTIC MONITORING TEST RESULTS on the repair order, then go to the next step.
2	**VERIFY RELATED REPAIR INFORMATION AVAILABILITY** • Verify related Service Information availability. • Is any related Service Information available?	Yes	Perform repair or diagnosis according to the available Service information. If the vehicle is not repaired, go to the next step.
		No	Go to the next step.
3	**VERIFY RELATED PENDING CODE OR STORED DTC** • Turn the ignition switch off, then to the ON position (Engine off). • Verify the related PENDING CODE or stored DTCs using the WDS or equivalent. • Is the DTC P0031 or P0032 also present?	Yes	Go to appropriate DTC troubleshooting procedure. (See 01–02A–18 DTC TABLE [L3].)
		No	Go to the next step.
4	**IDENTIFY TRIGGER DTC FOR FREEZE FRAME DATA** • Is DTC P0030 on FREEZE FRAME DATA?	Yes	Go to the next step.
		No	Go to troubleshooting for DTC on FREEZE FRAME DATA. (See 01–02A–18 DTC TABLE [L3].)
5	**INSPECT FRONT HO2S CONNECTOR FOR POOR CONNECTION** • Turn the ignition switch off. • Disconnect the front HO2S connector. • Inspect for poor connection (such as damaged/ pulled-out pins, and corrosion). • Is there any malfunction?	Yes	Repair or replace the terminal, then go to Step 11.
		No	Go to the next step.
6	**INSPECT FRONT HO2S HEATER CONTROL CIRCUIT FOR SHORT TO GROUND** • Front HO2S connector disconnected. • Inspect for poor connection (such as damaged/ pulled-out pins, and corrosion). • Is there continuity?	Yes	Repair or replace for short to ground, then go to Step 11.
		No	Go to the next step.
7	**INSPECT FRONT HO2S HEATER** • Inspect the front HO2S heater. (See 01–40A–37 HEATED OXYGEN SENSOR (HO2S) INSPECTION [L3].) • Is there any malfunction?	Yes	Replace the front HO2S, then go to Step 11. (See 01–15A–2 EXHAUST SYSTEM REMOVAL/ INSTALLATION [L3].) (See 01–15A–2 EXHAUST SYSTEM REMOVAL/ INSTALLATION [L3].)
		No	Go to the next step.
8	**INSPECT PCM CONNECTOR FOR POOR CONNECTION** • Turn the ignition switch off. • Disconnect the PCM connector. • Inspect for poor connection (such as damaged/ pulled-out pins, and corrosion). • Is there any malfunction?	Yes	Repair or replace the terminal, then go to Step11.
		No	Go to the next step.
9	**INSPECT FRONT HO2S CIRCUIT FOR OPEN** • Front HO2S and PCM connectors disconnected. • Measure the continuity following circuit at wiring harness-side terminal. — Between front HO2S terminal C*1, 2D*2 and PCM terminal 2BG — Between front HO2S terminal 1B*2 and PCM terminal 2AC*2 • Are there continuity?	Yes	Go to the next step.
		No	Repair or replace for open, then go to Step 11.
10	**INSPECT FRONT HO2S HEATER CONTROL CIRCUIT FOR SHORT TO POWER** • Front HO2S and PCM connectors disconnected. • Measure the voltage between front HO2S sensor terminal C*1, 2D*2 (wiring harness-side) and ground? • Is the voltage greater than **1.5V**	Yes	Repair or replace for short to power, then go to the next step.
		No	Go to the next step.

STEP	INSPECTION		ACTION
11	**VERIFY TROUBLESHOOTING OF DTC P0030 COMPLETED** • Make sure to reconnect all disconnected connectors. • Clear the DTC from the PCM memory using the WDS or equivalent. • Perform the KOEO or KOER self-test. (See 01–02A–12 KOEO/KOER SELF TEST [L3].) • Is the PENDING CODE for this DTC present?	Yes	Replace the PCM, then go to the next step. (See 01–40A–9 PCM REMOVAL/INSTALLATION [L3].)
		No	Go to the next step.
12	**VERIFY AFTER REPAIR PROCEDURE** • Perform the "AFTER REPAIR PROCEDURE". (See 01–02A–12 AFTER REPAIR PROCEDURE [L3].) • Are any DTCs present?	Yes	Go to the applicable DTC inspection. (See 01–02A–18 DTC TABLE [L3].)
		No	DTC troubleshooting completed.

*1 : California Emission Regulation Applicable ATX Model
*2 : Except for California Emission Regulation Applicable ATX Model

DTC P0031 [L3]

E6U010200001W11

California Emission Regulation Applicable ATX Model

DTC P0031	Front HO2S heater circuit low input
DETECTION CONDITION	• The PCM monitors the front HO2S heater control voltage when the PCM turns the front HO2S heater off. If the control voltage **exceeds 50%** of the battery voltage, the PCM determines that the front HO2S heater control circuit voltage is low. **Diagnostic support note** • This is a continuous monitor (HO2S heater). • MIL illuminates if PCM detects above malfunction condition in two consecutive drive cycles or in one drive cycle while DTC for the same malfunction has been stored in PCM. • PENDING CODE is available if PCM detects the above malfunction condition during first drive cycle. • FREEZE FRAME DATA is available. • The DTC is stored in the PCM memory.
POSSIBLE CAUSE	• Front HO2S heater malfunction • Connector or terminal malfunction • Short to power supply in wiring harness between Front HO2S terminal C and PCM terminal 2BG • PCM malfunction

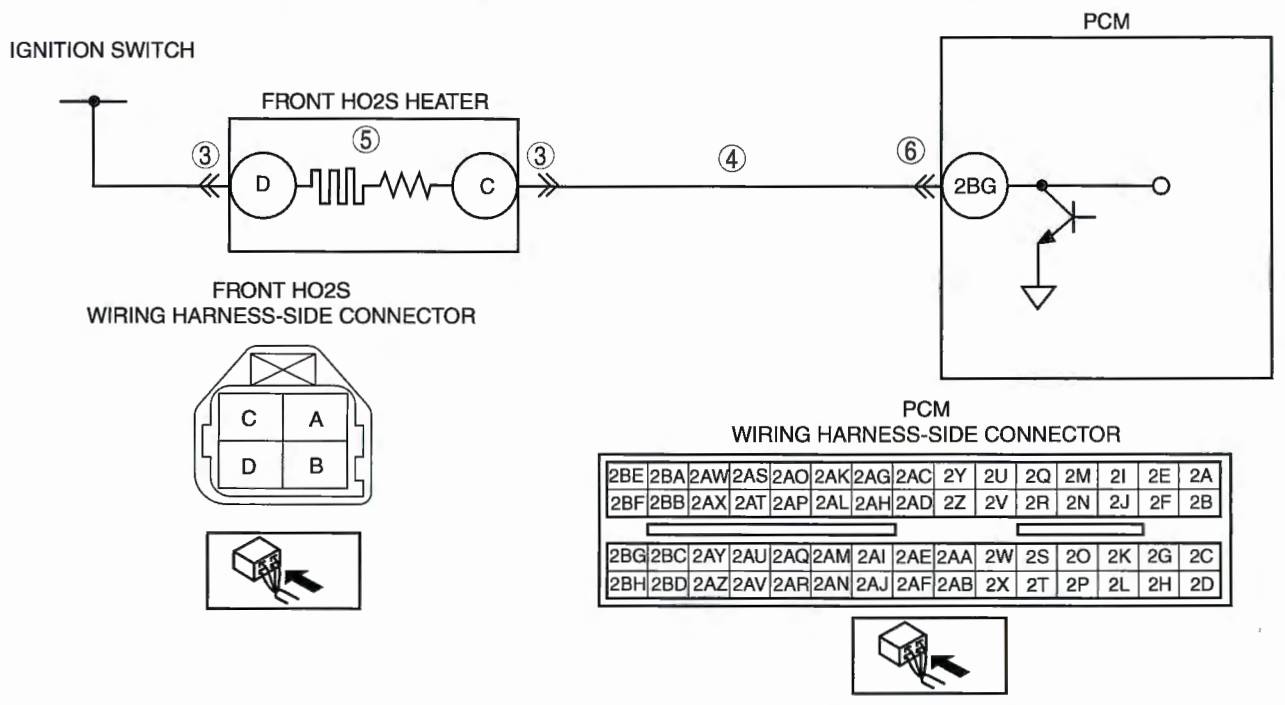

Diagnostic procedure

STEP	INSPECTION		ACTION
1	**VERIFY FREEZE FRAME DATA AND DIAGNOSTIC MONITORING TEST RESULTS HAVE BEEN RECORDED** • Have FREEZE FRAME DATA and DIAGNOSTIC MONITORING TEST RESULTS (HO2S heater related) been recorded?	Yes	Go to the next step.
		No	Record the FREEZE FRAME DATA and DIAGNOSTIC MONITORING TEST RESULTS on the repair order, then go to the next step.
2	**VERIFY RELATED REPAIR INFORMATION AVAILABILITY** • Verify related Service Bulletins and/or on-line repair information availability. • Is any related repair information available?	Yes	Perform repair or diagnosis according to the available repair information. • If the vehicle is not repaired, go to the next step.
		No	Go to the next step.
3	**INSPECT FRONT HO2S CONNECTOR FOR POOR CONNECTION** • Turn the ignition switch off. • Disconnect the front HO2S connector. • Inspect for poor connection (such as damaged/ pulled-out pins, and corrosion). • Is there any malfunction?	Yes	Repair or replace the terminal, then go to Step 7.
		No	Go to the next step.
4	**INSPECT FRONT HO2S HEATER CONTROL CIRCUIT FOR SHORT TO POWER SUPPLY** • Turn the ignition switch to the ON position (Engine off). • Measure the voltage between front HO2S terminal C (wiring harness-side) and body GND. • Is the voltage **B+**?	Yes	Repair or replace the wiring harness for a possible short to power supply, then go to Step 7.
		No	Go to the next step.
5	**INSPECT FRONT HO2S HEATER** • Inspect the front HO2S heater. (See 01–40A–37 HEATED OXYGEN SENSOR (HO2S) INSPECTION [L3].) • Is there any malfunction?	Yes	Replace the front HO2S, then go to Step 7. (See 01–15A–2 EXHAUST SYSTEM REMOVAL/ INSTALLATION [L3].)
		No	Go to the next step.
6	**INSPECT PCM CONNECTOR FOR POOR CONNECTION** • Turn the ignition switch off. • Disconnect the PCM connector. • Inspect for poor connection (such as damaged/ pulled-out pins, and corrosion). • Is there any malfunction?	Yes	Repair or replace the terminal, then go to the next step.
		No	Go to the next step.
7	**VERIFY TROUBLESHOOTING OF DTC P0031 COMPLETED** • Make sure to reconnect all disconnected connectors. • Clear the DTC from the PCM memory using the WDS or equivalent. • Perform the HO2S heater, HO2S, and TWC Repair Verification Drive Mode. (See 01–02A–13 OBD-II DRIVE MODE [L3].) • Is the PENDING CODE for this DTC present?	Yes	Replace the PCM, then go to the next step. (See 01–40A–9 PCM REMOVAL/INSTALLATION [L3].)
		No	Go to the next step.
8	**VERIFY AFTER REPAIR PROCEDURE** • Perform the "AFTER REPAIR PROCEDURE". (See 01–02A–12 AFTER REPAIR PROCEDURE [L3].) • Are any DTCs present?	Yes	Go to the applicable DTC inspection. (See 01–02A–18 DTC TABLE [L3].)
		No	DTC troubleshooting completed.

Except for California Emission Regulation Applicable ATX Model

DTC P0031	Front HO2S heater circuit low input
DETECTION CONDITION	• The PCM monitors the front HO2S heater output voltage. if the PCM turns the front HO2S heater off or on but the front HO2S heater circuit remains low voltage, the PCM determines that the front HO2S heater circuit has a malfunction. **Note** • The front HO2S heater is controlled by duty signal. **Diagnostic support note** • This is an intermittent monitor (HO2S heater). • The MIL illuminates if the PCM detects the above malfunction condition in two consecutive drive cycles or in one drive cycle while the DTC for the same malfunction has been stored in the PCM. • PENDING CODE is available if the PCM detects the above malfunction condition during the first drive cycle. • FREEZE FRAME DATA is available. • The DTC is stored in the PCM memory.
POSSIBLE CAUSE	• Front HO2S heater malfunction • Connector or terminal malfunction • Open circuit in wiring harness between ignition switch and front HO2S terminal 2B • Short to ground in wiring harness between ignition switch and front HO2S terminal 2B • Open circuit in wiring harness between front HO2S terminal 2D and PCM terminal 2BG • Short to ground in wiring harness between front HO2S terminal 2D and PCM terminal 2BG • PCM malfunction

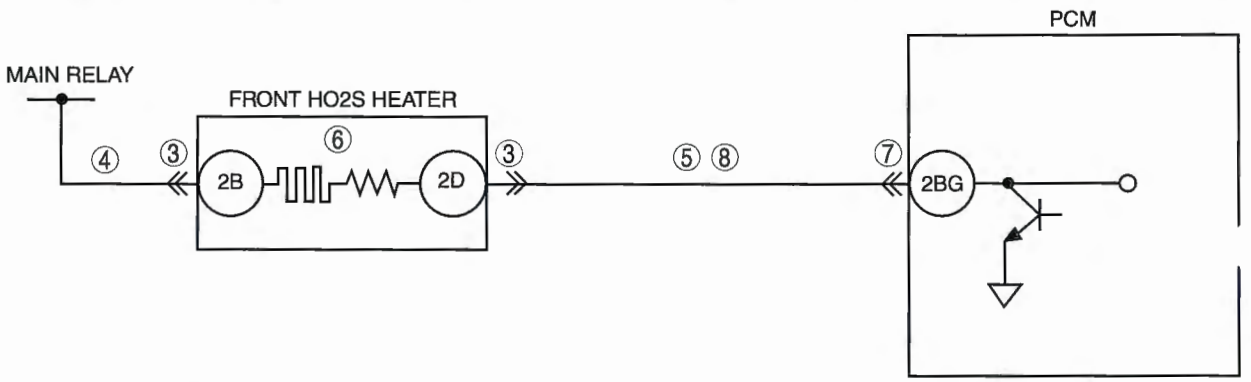

FRONT HO2S
WIRING HARNESS-SIDE CONNECTOR

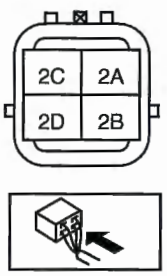

PCM
WIRING HARNESS-SIDE CONNECTOR

2BE	2BA	2AW	2AS	2AO	2AK	2AG	2AC	2Y	2U	2Q	2M	2I	2E	2A
2BF	2BB	2AX	2AT	2AP	2AL	2AH	2AD	2Z	2V	2R	2N	2J	2F	2B
2BG	2BC	2AY	2AU	2AQ	2AM	2AI	2AE	2AA	2W	2S	2O	2K	2G	2C
2BH	2BD	2AZ	2AV	2AR	2AN	2AJ	2AF	2AB	2X	2T	2P	2L	2H	2D

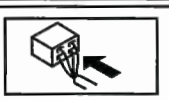

Diagnostic procedure

STEP	INSPECTION		ACTION
1	**VERIFY FREEZE FRAME DATA AND DIAGNOSTIC MONITORING TEST RESULTS HAVE BEEN RECORDED** • Have FREEZE FRAME DATA and DIAGNOSTIC MONITORING TEST RESULTS (HO2S heater related) been recorded?	Yes	Go to the next step.
		No	Record the FREEZE FRAME DATA and DIAGNOSTIC MONITORING TEST RESULTS on the repair order, then go to the next step.
2	**VERIFY RELATED REPAIR INFORMATION AVAILABILITY** • Verify related Service Information availability. • Is any related Service Information available?	Yes	Perform repair or diagnosis according to the available Service information. If the vehicle is not repaired, go to the next step.
		No	Go to the next step.

STEP	INSPECTION		ACTION
3	**INSPECT FRONT HO2S CONNECTOR FOR POOR CONNECTION** • Turn the ignition switch off. • Disconnect the front HO2S connector. • Inspect for poor connection (such as damaged/ pulled-out pins, and corrosion). • Is there any malfunction?	Yes	Repair or replace the terminal, then go to Step 9.
		No	Go to the next step.
4	**INSPECT FRONT HO2S HEATER POWER CIRCUIT FOR OPEN CIRCUIT OR SHORT TO GROUND** • Turn the ignition switch to the ON position (Engine off). • Measure the voltage between front HO2S terminal 2B (wiring harness-side) and body ground. • Is the voltage **B+**?	Yes	Go to the next step.
		No	Repair or replace the wiring harness for a possible open circuit or short to ground, then go to Step 9.
5	**INSPECT FRONT HO2S HEATER CONTROL CIRCUIT FOR SHORT TO GROUND** • Turn the ignition switch off. • Inspect for continuity between front HO2S terminal 2D (wiring harness-side) and body ground. • Is there continuity?	Yes	Repair or replace the wiring harness for a possible short to ground, then go to Step 9.
		No	Go to the next step.
6	**INSPECT FRONT HO2S HEATER** • Inspect the front HO2S heater. (See 01–40A–37 HEATED OXYGEN SENSOR (HO2S) INSPECTION [L3].) • Is there any malfunction?	Yes	Replace the front HO2S, then go to Step 9. (See 01–15A–2 EXHAUST SYSTEM REMOVAL/ INSTALLATION [L3].) (See 01–15A–2 EXHAUST SYSTEM REMOVAL/ INSTALLATION [L3].)
		No	Go to the next step.
7	**INSPECT PCM CONNECTOR FOR POOR CONNECTION** • Turn the ignition switch off. • Disconnect the PCM connector. • Inspect for poor connection (such as damaged/ pulled-out pins, and corrosion). • Is there any malfunction?	Yes	Repair or replace the terminal, then go to Step 9.
		No	Go to the next step.
8	**INSPECT FRONT HO2S HEATER CONTROL CIRCUIT FOR OPEN CIRCUIT** • Turn the ignition switch off. • Inspect for continuity between front HO2S terminal 2D (wiring harness-side) and PCM terminal 2BG (wiring harness-side). • Is there continuity?	Yes	Go to the next step.
		No	Repair or replace the wiring harness for a possible open circuit, then go to the next step.
9	**VERIFY TROUBLESHOOTING OF DTC P0031 COMPLETED** • Make sure to reconnect all disconnected connectors. • Clear the DTC from the PCM memory using the WDS or equivalent. • Perform the KOEO or KOER self-test. (See 01–02A–12 KOEO/KOER SELF TEST [L3].) • Is the PENDING CODE for this DTC present?	Yes	Replace the PCM, then go to the next step. (See 01–40A–9 PCM REMOVAL/INSTALLATION [L3].)
		No	Go to the next step.
10	**VERIFY AFTER REPAIR PROCEDURE** • Perform the "AFTER REPAIR PROCEDURE". (See 01–02A–12 AFTER REPAIR PROCEDURE [L3].) • Are any DTCs present?	Yes	Go to the applicable DTC inspection. (See 01–02A–18 DTC TABLE [L3].)
		No	DTC troubleshooting completed.

DTC P0032 [L3]

E6U010200001W12

California Emission Regulation Applicable ATX Model

DTC P0032	Front HO2S heater circuit high input
DETECTION CONDITION	• The PCM monitors the front HO2S heater control voltage when the PCM turns the front HO2S heater on. the control voltage is **less than 50%** of the battery voltage, the PCM determines that the front HO2S heater control circuit voltage is high. **Diagnostic support note** • This is a continuous monitor (HO2S heater). • MIL illuminates if PCM detects above malfunction condition in two consecutive drive cycles or in one drive cycle while DTC for the same malfunction has been stored in PCM. • PENDING CODE is available if PCM detects the above malfunction condition during first drive cycle. • FREEZE FRAME DATA is available. • The DTC is stored in the PCM memory.
POSSIBLE CAUSE	• Front HO2S heater malfunction • Connector or terminal malfunction • Open circuit in wiring harness between ignition switch and front HO2S terminal D • Short to GND in wiring harness between ignition switch and front HO2S terminal D • Open circuit in wiring harness between front HO2S terminal C and PCM terminal 2BG • Short to GND in wiring harness between front HO2S terminal C and PCM terminal 2BG • PCM malfunction

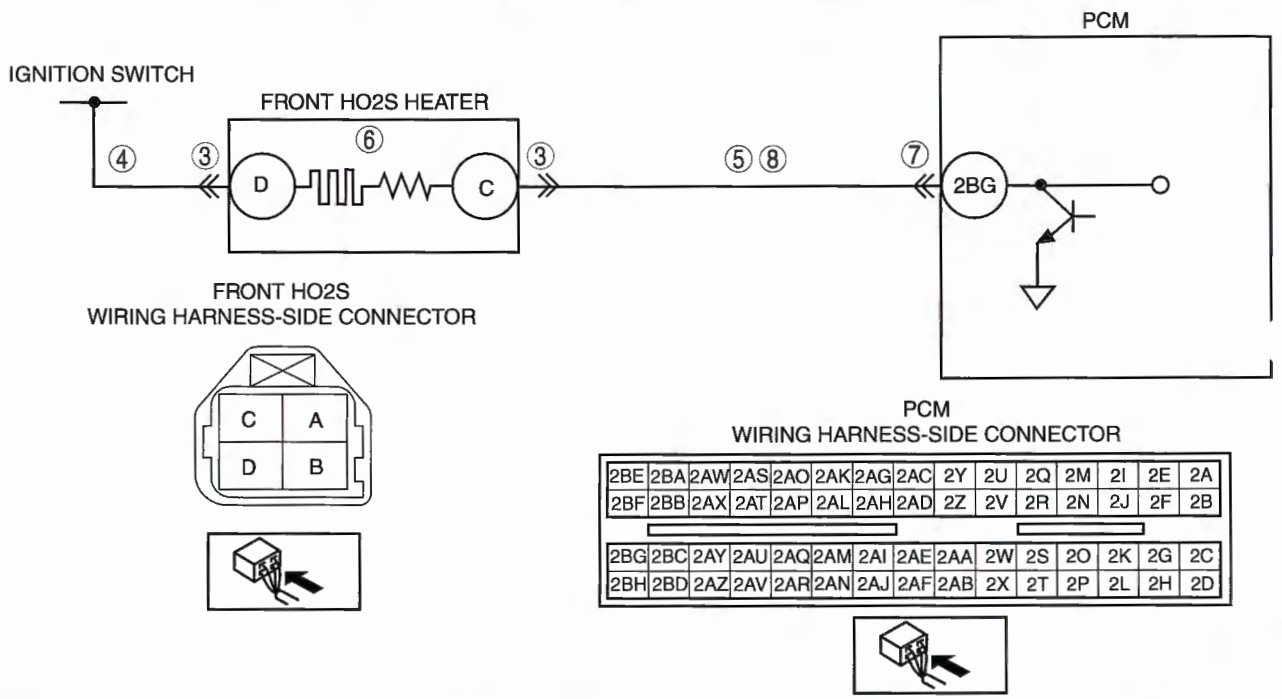

Diagnostic procedure

STEP	INSPECTION		ACTION
1	**VERIFY FREEZE FRAME DATA AND DIAGNOSTIC MONITORING TEST RESULTS HAVE BEEN RECORDED** • Have FREEZE FRAME DATA and DIAGNOSTIC MONITORING TEST RESULTS (HO2S heater related) been recorded?	Yes	Go to the next step.
		No	Record the FREEZE FRAME DATA and DIAGNOSTIC MONITORING TEST RESULTS on the repair order, then go to the next step.
2	**VERIFY RELATED REPAIR INFORMATION AVAILABILITY** • Verify related Service Bulletins and/or on-line repair information availability. • Is any related repair information available?	Yes	Perform repair or diagnosis according to the available repair information. • If the vehicle is not repaired, go to the next step.
		No	Go to the next step.

STEP	INSPECTION		ACTION
3	**INSPECT FRONT HO2S CONNECTOR FOR POOR CONNECTION** • Turn the ignition switch off. • Disconnect the front HO2S connector. • Inspect for poor connection (such as damaged/ pulled-out pins, and corrosion). • Is there any malfunction?	Yes	Repair or replace the terminal, then go to Step 9.
		No	Go to the next step.
4	**INSPECT FRONT HO2S HEATER POWER CIRCUIT FOR OPEN CIRCUIT OR SHORT TO GND** • Turn the ignition switch to the ON position (Engine off). • Measure the voltage between front HO2S terminal D (wiring harness-side) and body GND. • Is the voltage **B+**?	Yes	Go to the next step.
		No	Repair or replace the wiring harness for a possible open circuit or short to GND, then go to Step 9.
5	**INSPECT FRONT HO2S HEATER CONTROL CIRCUIT FOR SHORT TO GND** • Turn the ignition switch off. • Inspect for continuity between front HO2S terminal C (wiring harness-side) and body GND. • Is there continuity?	Yes	Repair or replace the wiring harness for a possible short to GND, then go to Step 9.
		No	Go to the next step.
6	**INSPECT FRONT HO2S HEATER** • Inspect the front HO2S heater. (See 01–40A–37 HEATED OXYGEN SENSOR (HO2S) INSPECTION [L3].) • Is there any malfunction?	Yes	Replace the front HO2S, then go to Step 9. (See 01–15A–2 EXHAUST SYSTEM REMOVAL/ INSTALLATION [L3].)
		No	Go to the next step.
7	**INSPECT PCM CONNECTOR FOR POOR CONNECTION** • Turn the ignition switch off. • Disconnect the PCM connector. • Inspect for poor connection (such as damaged/ pulled-out pins, and corrosion). • Is there any malfunction?	Yes	Repair or replace the terminal, then go to Step 9.
		No	Go to the next step.
8	**INSPECT FRONT HO2S HEATER CONTROL CIRCUIT FOR OPEN CIRCUIT** • Turn the ignition switch off. • Inspect for continuity between front HO2S terminal C (wiring harness-side) and PCM terminal 2BG (wiring harness-side). • Is there continuity?	Yes	Go to the next step.
		No	Repair or replace the wiring harness for a possible open circuit, then go to the next step.
9	**VERIFY TROUBLESHOOTING OF DTC P0032 COMPLETED** • Make sure to reconnect all disconnected connectors. • Clear the DTC from the PCM memory using the WDS or equivalent. • Perform the HO2S heater, HO2S, and TWC Repair Verification Drive Mode. (See 01–02A–13 OBD-II DRIVE MODE [L3].) • Is the PENDING CODE for this DTC present?	Yes	Replace the PCM, then go to the next step. (See 01–40A–9 PCM REMOVAL/INSTALLATION [L3].)
		No	Go to the next step.
10	**VERIFY AFTER REPAIR PROCEDURE** • Perform the "AFTER REPAIR PROCEDURE". (See 01–02A–12 AFTER REPAIR PROCEDURE [L3].) • Are any DTCs present?	Yes	Go to the applicable DTC inspection. (See 01–02A–18 DTC TABLE [L3].)
		No	DTC troubleshooting completed.

Except for California Emission Regulation Applicable ATX Model

DTC P0032	Front HO2S heater circuit high input
DETECTION CONDITION	• The PCM monitors the front HO2S heater output voltage. if the PCM turns the front HO2S heater off or on but the front HO2S heater circuit remains high voltage, the PCM determines that the front HO2S heater circuit has a malfunction. **Note** • The front HO2S heater is controlled by duty signal. **Diagnostic support note** • This is a continuous monitor (HO2S heater). • The MIL illuminates if the PCM detects the above malfunction condition in two consecutive drive cycles or in one drive cycle while the DTC for the same malfunction has been stored in the PCM. • PENDING CODE is available if the PCM detects the above malfunction condition during the first drive cycle. • FREEZE FRAME DATA is available. • The DTC is stored in the PCM memory.
POSSIBLE CAUSE	• Front HO2S heater malfunction • Connector or terminal malfunction • Short to power supply in wiring harness between front HO2S terminal 2D and PCM terminal 2BG • PCM malfunction

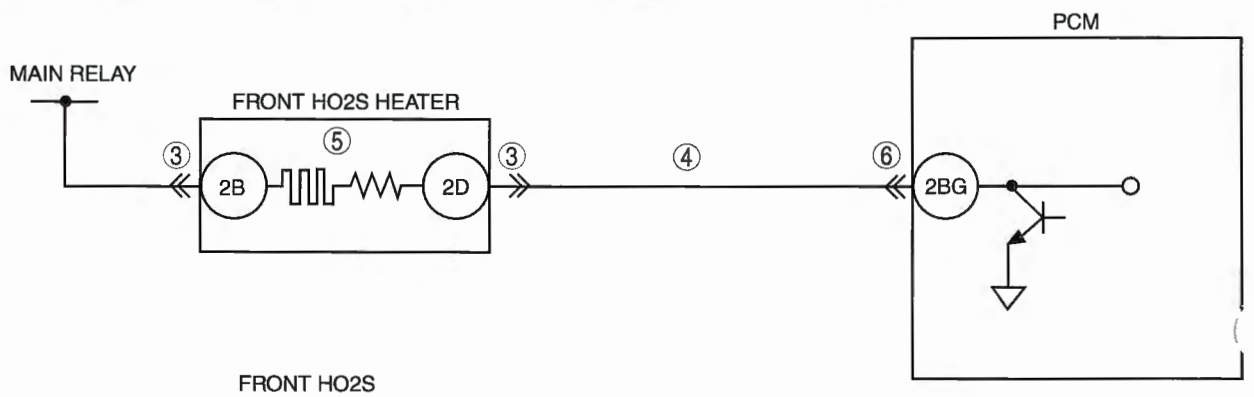

FRONT HO2S
WIRING HARNESS-SIDE CONNECTOR

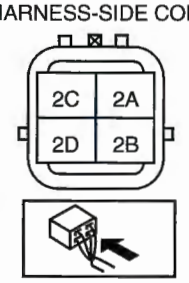

PCM
WIRING HARNESS-SIDE CONNECTOR

2BE	2BA	2AW	2AS	2AO	2AK	2AG	2AC	2Y	2U	2Q	2M	2I	2E	2A
2BF	2BB	2AX	2AT	2AP	2AL	2AH	2AD	2Z	2V	2R	2N	2J	2F	2B
2BG	2BC	2AY	2AU	2AQ	2AM	2AI	2AE	2AA	2W	2S	2O	2K	2G	2C
2BH	2BD	2AZ	2AV	2AR	2AN	2AJ	2AF	2AB	2X	2T	2P	2L	2H	2D

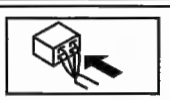

Diagnostic procedure

STEP	INSPECTION		ACTION
1	**VERIFY FREEZE FRAME DATA AND DIAGNOSTIC MONITORING TEST RESULTS HAVE BEEN RECORDED** • Have FREEZE FRAME DATA and DIAGNOSTIC MONITORING TEST RESULTS (HO2S heater related) been recorded?	Yes	Go to the next step.
		No	Record the FREEZE FRAME DATA and DIAGNOSTIC MONITORING TEST RESULTS on the repair order, then go to the next step.
2	**VERIFY RELATED REPAIR INFORMATION AVAILABILITY** • Verify related Service Information availability. • Is any related Service Information available?	Yes	Perform repair or diagnosis according to the available Service information. If the vehicle is not repaired, go to the next step.
		No	Go to the next step.
3	**INSPECT FRONT HO2S CONNECTOR FOR POOR CONNECTION** • Turn the ignition switch off. • Disconnect the front HO2S connector. • Inspect for poor connection (such as damaged/ pulled-out pins, and corrosion). • Is there any malfunction?	Yes	Repair or replace the terminal, then go to Step 7.
		No	Go to the next step.
4	**INSPECT FRONT HO2S HEATER CONTROL CIRCUIT FOR SHORT TO POWER SUPPLY** • Turn the ignition switch to the ON position (Engine off). • Measure the voltage between front HO2S terminal 2D (wiring harness-side) and body ground. • Is the voltage **B+**?	Yes	Repair or replace the wiring harness for a possible short to power supply, then go to Step 7.
		No	Go to the next step.
5	**INSPECT FRONT HO2S HEATER** • Inspect the front HO2S heater. (See 01–40A–37 HEATED OXYGEN SENSOR (HO2S) INSPECTION [L3].) • Is there any malfunction?	Yes	Replace the front HO2S, then go to Step 7. (See 01–15A–2 EXHAUST SYSTEM REMOVAL/ INSTALLATION [L3].) (See 01–15A–2 EXHAUST SYSTEM REMOVAL/ INSTALLATION [L3].)
		No	Go to the next step.
6	**INSPECT PCM CONNECTOR FOR POOR CONNECTION** • Turn the ignition switch off. • Disconnect the PCM connector. • Inspect for poor connection (such as damaged/ pulled-out pins, and corrosion). • Is there any malfunction?	Yes	Repair or replace the terminal, then go to the next step.
		No	Go to the next step.
7	**VERIFY TROUBLESHOOTING OF DTC P0032 COMPLETED** • Make sure to reconnect all disconnected connectors. • Clear the DTC from the PCM memory using the WDS or equivalent. • Perform the KOEO or KOER self-test. (See 01–02A–12 KOEO/KOER SELF TEST [L3].) • Is the PENDING CODE for this DTC present?	Yes	Replace the PCM, then go to the next step. (See 01–40A–9 PCM REMOVAL/INSTALLATION [L3].)
		No	Go to the next step.
8	**VERIFY AFTER REPAIR PROCEDURE** • Perform the "AFTER REPAIR PROCEDURE". (See 01–02A–12 AFTER REPAIR PROCEDURE [L3].) • Are any DTCs present?	Yes	Go to the applicable DTC inspection. (See 01–02A–18 DTC TABLE [L3].)
		No	DTC troubleshooting completed.

DTC P0037 [L3]

E6U010200001W06

California Emission Regulation Applicable ATX Model

DTC P0037	Middle HO2S heater circuit low input
DETECTION CONDITION	• The PCM monitors the middle HO2S heater control voltage when the PCM turns the middle HO2S heate off. If the control voltage **exceeds 25%** of the battery voltage, the PCM determines that the middle HO2S heater control circuit voltage is low. **Diagnostic support note** • This is a continuous monitor (HO2S heater). • MIL illuminates if PCM detects above malfunction condition in two consecutive drive cycles or in one drive cycle while DTC for the same malfunction has been stored in PCM. • PENDING CODE is available if PCM detects the above malfunction condition during first drive cycle. • FREEZE FRAME DATA is available. • The DTC is stored in the PCM memory.
POSSIBLE CAUSE	• Middle HO2S heater malfunction • Connector or terminal malfunction • Short to power supply in wiring harness between middle HO2S terminal D and PCM terminal 2BF • PCM malfunction

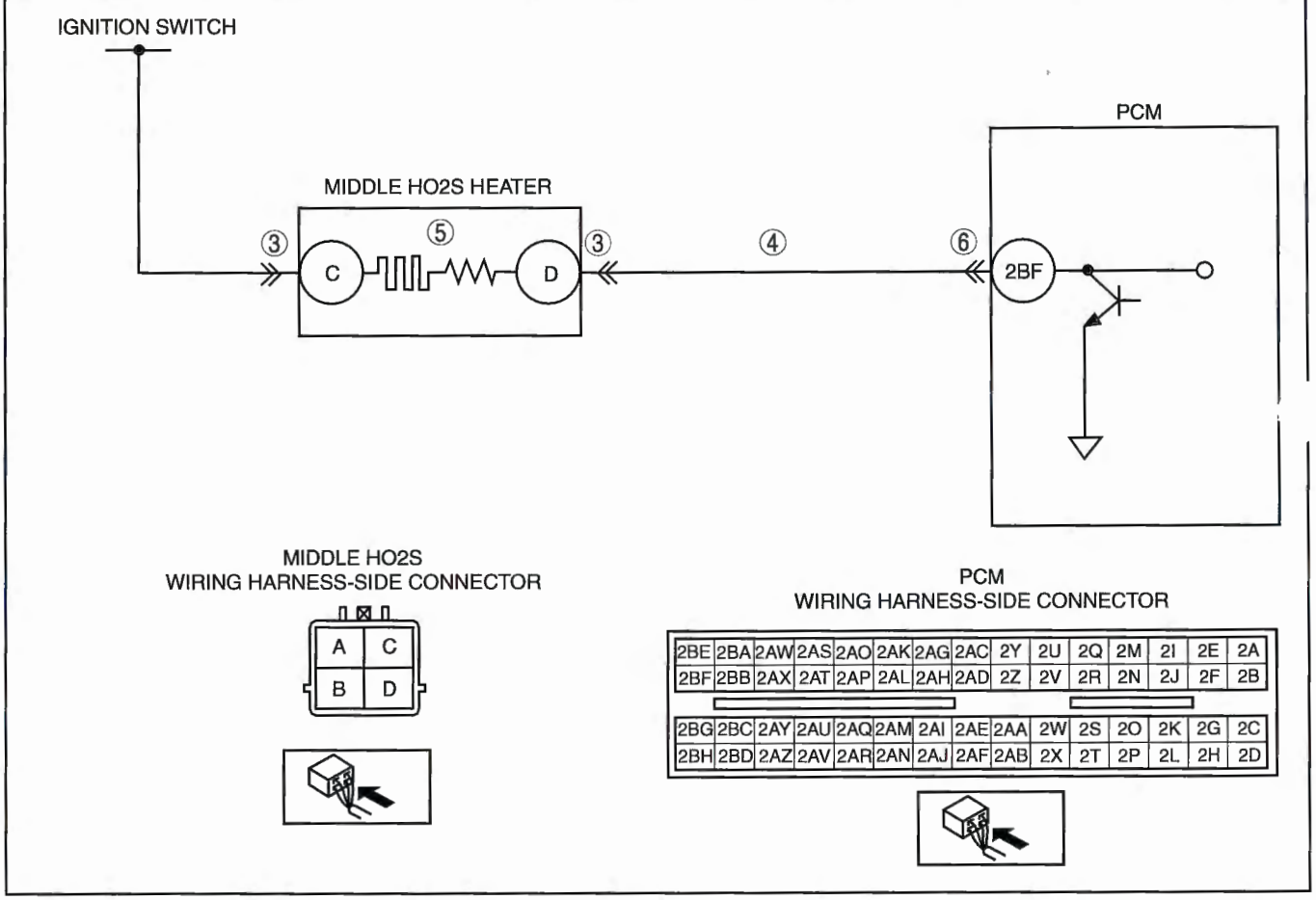

Diagnostic procedure

STEP	INSPECTION		ACTION
1	**VERIFY FREEZE FRAME DATA AND DIAGNOSTIC MONITORING TEST RESULTS HAVE BEEN RECORDED** • Have FREEZE FRAME DATA and DIAGNOSTIC MONITORING TEST RESULTS (HO2S heater related) been recorded?	Yes	Go to the next step.
		No	Record the FREEZE FRAME DATA and DIAGNOSTIC MONITORING TEST RESULTS on the repair order, then go to the next step.
2	**VERIFY RELATED REPAIR INFORMATION AVAILABILITY** • Verify related Service Bulletins and/or on-line repair information availability. • Is any related repair information available?	Yes	Perform repair or diagnosis according to the available repair information. • If the vehicle is not repaired, go to the next step.
		No	Go to the next step.

STEP	INSPECTION		ACTION
3	**INSPECT MIDDLE HO2S CONNECTOR FOR POOR CONNECTION** • Turn the ignition switch off. • Disconnect the middle HO2S connector. • Inspect for poor connection (such as damaged/ pulled-out pins, and corrosion). • Is there any malfunction?	Yes	Repair or replace the terminal, then go to Step 7.
		No	Go to the next step.
4	**INSPECT MIDDLE HO2S HEATER CONTROL CIRCUIT FOR SHORT TO POWER SUPPLY** • Turn the ignition switch to the ON position (Engine off). • Measure the voltage between middle HO2S terminal D (wiring harness-side) and body GND. • Is the voltage **B+**?	Yes	Repair or replace the wiring harness for a possible short to power supply, then go to Step 7.
		No	Go to the next step.
5	**INSPECT MIDDLE HO2S HEATER** • Inspect the middle HO2S heater. (See 01–40A–37 HEATED OXYGEN SENSOR (HO2S) INSPECTION [L3].) • Is there any malfunction?	Yes	Replace the middle HO2S, then go to Step 7. (See 01–15A–2 EXHAUST SYSTEM REMOVAL/ INSTALLATION [L3].)
		No	Go to the next step.
6	**INSPECT PCM CONNECTOR FOR POOR CONNECTION** • Turn the ignition switch off. • Disconnect the PCM connector. • Inspect for poor connection (such as damaged/ pulled-out pins, and corrosion). • Is there any malfunction?	Yes	Repair or replace the terminal, then go to the next step.
		No	Go to the next step.
7	**VERIFY TROUBLESHOOTING OF DTC P0037 COMPLETED** • Make sure to reconnect all disconnected connectors. • Clear the DTC from the PCM memory using the WDS or equivalent. • Perform the HO2S heater, HO2S, and TWC Repair Verification Drive Mode. (See 01–02A–13 OBD-II DRIVE MODE [L3].) • Is the PENDING CODE for this DTC present?	Yes	Replace the PCM, then go to the next step. (See 01–40A–9 PCM REMOVAL/INSTALLATION [L3].)
		No	Go to the next step.
8	**VERIFY AFTER REPAIR PROCEDURE** • Perform the "AFTER REPAIR PROCEDURE". (See 01–02A–12 AFTER REPAIR PROCEDURE [L3].) • Are any DTCs present?	Yes	Go to the applicable DTC inspection. (See 01–02A–18 DTC TABLE [L3].)
		No	DTC troubleshooting completed.

Except for California Emission Regulation Applicable ATX Model

DTC P0037	Rear HO2S heater circuit low input
DETECTION CONDITION	• The PCM monitors the rear HO2S heater output voltage. If the PCM turns the rear HO2S heater off or on but the rear HO2S heater circuit remains low voltage, the PCM determines that the rear HO2S heater circuit has malfunction. **Diagnostic support note** • This is a continuous monitor (HO2S heater). • MIL illuminates if PCM detects above malfunction condition in two consecutive drive cycles or in one drive cycle while DTC for the same malfunction has been stored in PCM. • PENDING CODE is available if PCM detects the above malfunction condition during first drive cycle. • FREEZE FRAME DATA is available. • The DTC is stored in the PCM memory.
POSSIBLE CAUSE	• Rear HO2S malfunction • Open circuit in wiring harness between the ignition switch and rear HO2S terminal C • Open circuit in wiring harness between rear HO2S terminal D and PCM terminal 2BE • Short to ground in wiring harness between rear HO2S terminal D and PCM terminal 2BE • Poor connection at the rear HO2S or the PCM connector • PCM malfunction

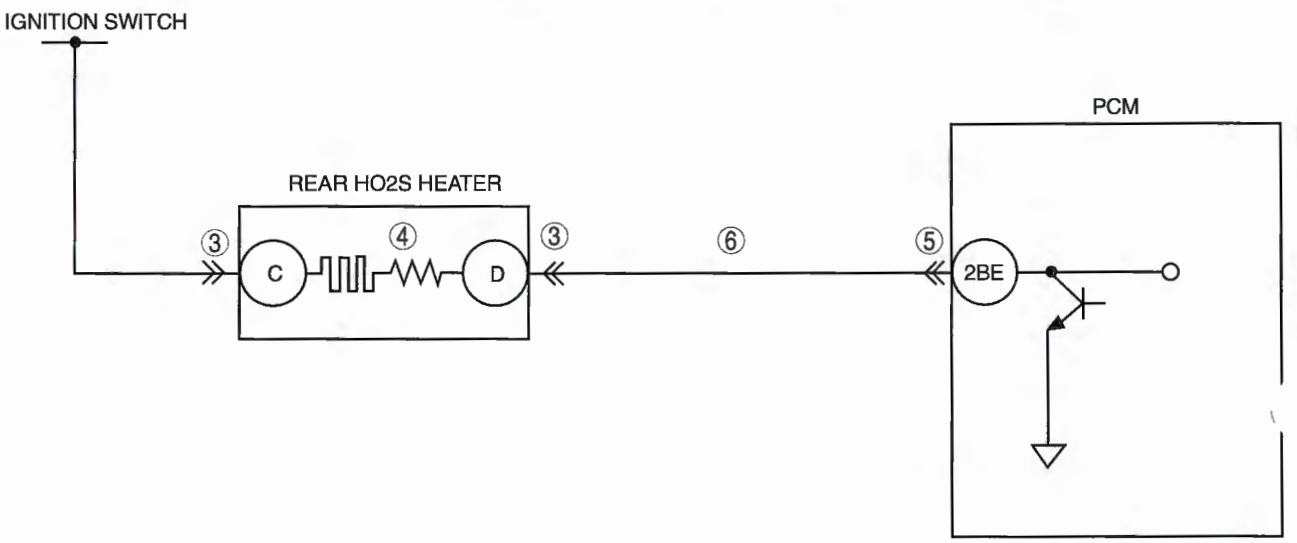

REAR HO2S
WIRING HARNESS-SIDE CONNECTOR

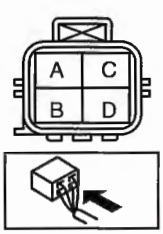

PCM
WIRING HARNESS-SIDE CONNECTOR

2BE	2BA	2AW	2AS	2AO	2AK	2AG	2AC	2Y	2U	2Q	2M	2I	2E	2A
2BF	2BB	2AX	2AT	2AP	2AL	2AH	2AD	2Z	2V	2R	2N	2J	2F	2B
2BG	2BC	2AY	2AU	2AQ	2AM	2AI	2AE	2AA	2W	2S	2O	2K	2G	2C
2BH	2BD	2AZ	2AV	2AR	2AN	2AJ	2AF	2AB	2X	2T	2P	2L	2H	2D

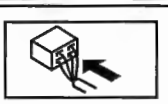

Diagnostic procedure

STEP	INSPECTION		ACTION
1	**VERIFY FREEZE FRAME DATA AND DIAGNOSTIC MONITORING TEST RESULTS HAVE BEEN RECORDED** • Have FREEZE FRAME DATA and DIAGNOSTIC MONITORING TEST RESULTS (HO2S heater related) been recorded?	Yes	Go to the next step.
		No	Record the FREEZE FRAME DATA and DIAGNOSTIC MONITORING TEST RESULTS on the repair order, then go to the next step.
2	**VERIFY RELATED REPAIR INFORMATION AVAILABILITY** • Verify related service Bulletins and/or on-line repair information availability. • Is any related repair information available?	Yes	Perform the repair or diagnosis according to the available repair information. • If the vehicle is not repaired, go to the next step.
		No	Go to the next step.
3	**INSPECT REAR HO2S TERMINAL** • Turn the ignition switch off. • Disconnect the rear HO2S connector. • Inspect for poor connection (such as damaged/ pulled out pins, corrosion). • Is there any malfunction?	Yes	Repair or replace the terminal, then go to Step 7.
		No	Go to the next step.
4	**INSPECT REAR HO2S HEATER** • Inspect rear HO2S heater. (See 01–40A–37 HEATED OXYGEN SENSOR (HO2S) INSPECTION [L3].) • Is rear HO2S heater normal?	Yes	Go to the next step.
		No	Replace the rear HO2S, then go to Step 7.
5	**INSPECT PCM TERMINAL** • Disconnect the PCM connector. • Inspect for poor connection (such as damaged/ pulled-out pins, corrosion). • Is there any malfunction?	Yes	Repair the terminal, then go to Step 7.
		No	Go to the next step.
6	**INSPECT REAR HO2S HEATER CONTROL CIRCUIT FOR SHORT TO POWER SUPPLY** • Turn the ignition switch to the ON position. (Engine off). • Measure the voltage between rear HO2S terminal D (wiring harness-side) and body ground. • Is the voltage **B+**?	Yes	Repair or replace the wiring harness for shot to power circuit, then go to the next step.
		No	Go to the next step.
7	**VERIFY TROUBLESHOOTING OF DTC P0037 COMPLETED** • Make sure to reconnect all disconnected connectors. • Clear the DTC from the PCM memory using the WDS or equivalent. • Perform the HO2S heater, HO2S, and TWC Repair Verification Drive Mode. (See 01–02A–13 OBD-II DRIVE MODE [L3].) • Is the PENDING CODE for this DTC present?	Yes	Replace the PCM, then go to the next step. (See 01–40A–9 PCM REMOVAL/INSTALLATION [L3].)
		No	Go to the next step.
8	**VERIFY AFTER REPAIR PROCEDURE** • Perform the "AFTER REPAIR PROCEDURE". (See 01–02A–12 AFTER REPAIR PROCEDURE [L3].) • Are any DTC present?	Yes	Go to the applicable DTC troubleshooting. (See 01–02A–18 DTC TABLE [L3].)
		No	Troubleshooting completed.

DTC P0038 [L3]

E6U010200001W07

California Emission Regulation Applicable ATX Model

DTC P0038	Middle HO2S heater circuit high input
DETECTION CONDITION	• The PCM monitors the middle HO2S heater control voltage when the PCM turns the middle HO2S heate on. If the control voltage is **less than 57%** of the battery voltage, the PCM determines that the middle HO2S heater control circuit voltage is high. **Diagnostic support note** • This is a continuous monitor (HO2S heater). • MIL illuminates if PCM detects above malfunction condition in two consecutive drive cycles or in one drive cycle while DTC for the same malfunction has been stored in PCM. • PENDING CODE is available if PCM detects the above malfunction condition during first drive cycle. • FREEZE FRAME DATA is available. • The DTC is stored in the PCM memory.
POSSIBLE CAUSE	• Middle HO2S heater malfunction • Connector or terminal malfunction • Open circuit in wiring harness between ignition switch and middle HO2S terminal C • Short to GND in wiring harness between ignition switch and middle HO2S terminal C • Open circuit in wiring harness between middle HO2S terminal D and PCM terminal 2BF • Short to GND in wiring harness between middle HO2S terminal D and PCM terminal 2BF • PCM malfunction

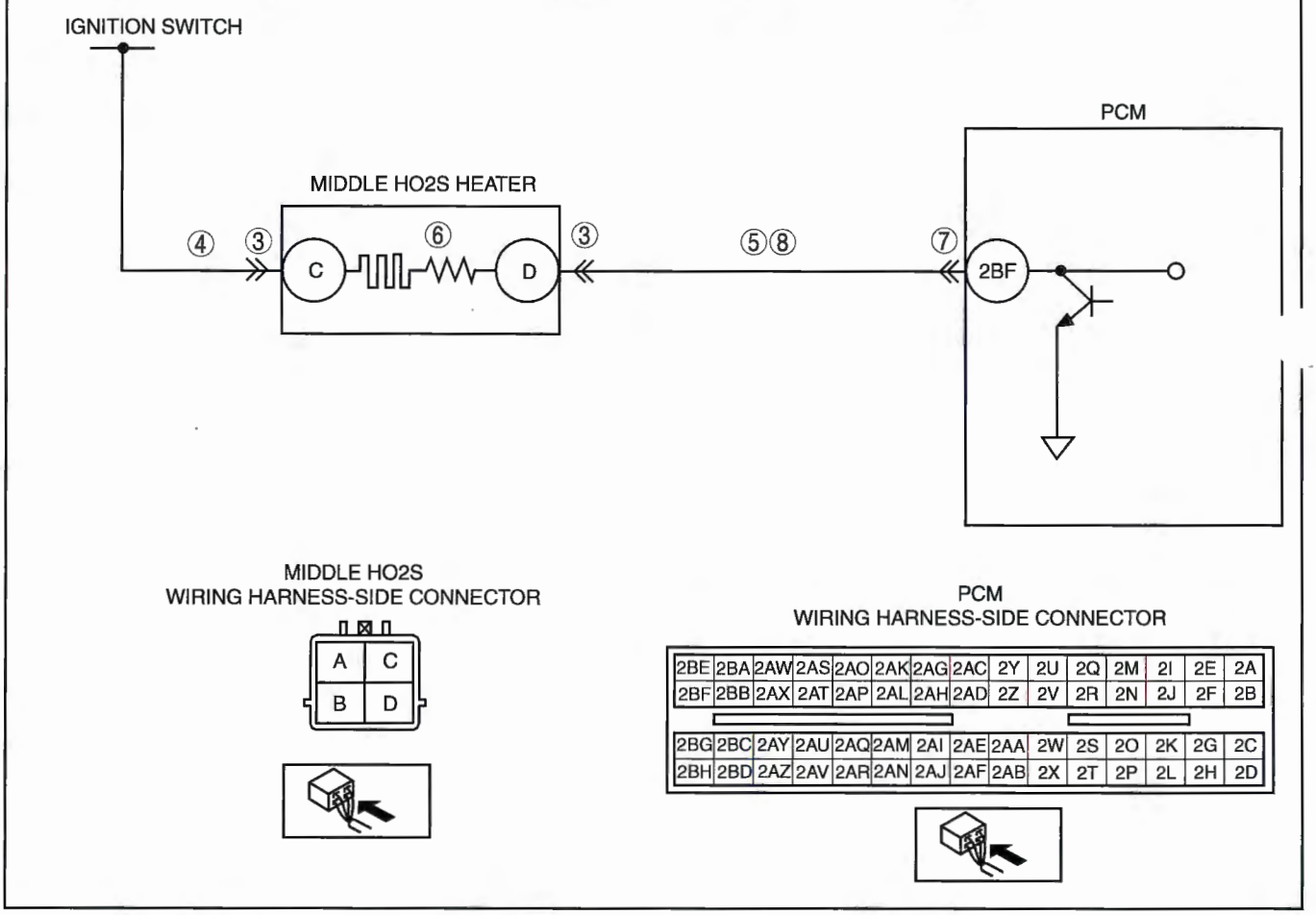

Diagnostic procedure

STEP	INSPECTION		ACTION
1	**VERIFY FREEZE FRAME DATA AND DIAGNOSTIC MONITORING TEST RESULTS HAVE BEEN RECORDED** • Have FREEZE FRAME DATA and DIAGNOSTIC MONITORING TEST RESULTS (HO2S heater related) been recorded?	Yes	Go to the next step.
		No	Record the FREEZE FRAME DATA and DIAGNOSTIC MONITORING TEST RESULTS on the repair order, then go to the next step.

STEP	INSPECTION		ACTION
2	**VERIFY RELATED REPAIR INFORMATION AVAILABILITY** • Verify related Service Bulletins and/or on-line repair information availability. • Is any related repair information available?	Yes	Perform repair or diagnosis according to the available repair information. • If the vehicle is not repaired, go to the next step.
		No	Go to the next step.
3	**INSPECT MIDDLE HO2S CONNECTOR FOR POOR CONNECTION** • Turn the ignition switch off. • Disconnect the middle HO2S connector. • Inspect for poor connection (such as damaged/ pulled-out pins, and corrosion). • Is there any malfunction?	Yes	Repair or replace the terminal, then go to Step 9.
		No	Go to the next step.
4	**INSPECT MIDDLE HO2S HEATER POWER CIRCUIT FOR OPEN CIRCUIT OR SHORT TO GND** • Turn the ignition switch to the ON position (Engine off). • Measure the voltage between middle HO2S terminal C (wiring harness-side) and body GND. • Is the voltage **B+**?	Yes	Go to the next step.
		No	Repair or replace the wiring harness for a possible open circuit or short to GND, then go to Step 9.
5	**INSPECT MIDDLE HO2S HEATER CONTROL CIRCUIT FOR SHORT TO GND** • Turn the ignition switch off. • Inspect for continuity between middle HO2S terminal D (wiring harness-side) and body GND. • Is there continuity?	Yes	Repair or replace the wiring harness for a possible short to GND, then go to Step 9.
		No	Go to the next step.
6	**INSPECT MIDDLE HO2S HEATER** • Inspect the middle HO2S heater. (See 01–40A–37 HEATED OXYGEN SENSOR (HO2S) INSPECTION [L3].) • Is there any malfunction?	Yes	Replace the middle HO2S, then go to Step 9. (See 01–15A–2 EXHAUST SYSTEM REMOVAL/ INSTALLATION [L3].)
		No	Go to the next step.
7	**INSPECT PCM CONNECTOR FOR POOR CONNECTION** • Turn the ignition switch off. • Disconnect the PCM connector. • Inspect for poor connection (such as damaged/ pulled-out pins, and corrosion). • Is there any malfunction?	Yes	Repair or replace the terminal, then go to Step 9.
		No	Go to the next step.
8	**INSPECT MIDDLE HO2S HEATER CONTROL CIRCUIT FOR OPEN CIRCUIT** • Turn the ignition switch off. • Inspect for continuity between middle HO2S terminal D (wiring harness-side) and PCM terminal 2BF (wiring harness-side). • Is there continuity?	Yes	Go to the next step.
		No	Repair or replace the wiring harness for a possible open circuit, then go to the next step.
9	**VERIFY TROUBLESHOOTING OF DTC P0038 COMPLETED** • Make sure to reconnect all disconnected connectors. • Clear the DTC from the PCM memory using the WDS or equivalent. • Perform the HO2S heater, HO2S, and TWC Repair Verification Drive Mode. (See 01–02A–13 OBD-II DRIVE MODE [L3].) • Is the PENDING CODE for this DTC present?	Yes	Replace the PCM, then go to the next step. (See 01–40A–9 PCM REMOVAL/INSTALLATION [L3].)
		No	Go to the next step.
10	**VERIFY AFTER REPAIR PROCEDURE** • Perform the "AFTER REPAIR PROCEDURE". (See 01–02A–12 AFTER REPAIR PROCEDURE [L3].) • Are any DTCs present?	Yes	Go to the applicable DTC inspection. (See 01–02A–18 DTC TABLE [L3].)
		No	DTC troubleshooting completed.

Except for California Emission Regulation Applicable ATX Model

DTC P0038	Rear HO2S heater circuit high input
DETECTION CONDITION	• The PCM monitors the rear HO2S heater output voltage. If the PCM turns the rear HO2S heater off or on but the rear HO2S heater circuit remains high voltage, the PCM determines that the rear HO2S heater circuit has malfunction. **Diagnostic support note** • This is a continuous monitor (HO2S heater). • MIL illuminates if PCM detects above malfunction condition in two consecutive drive cycles or in one drive cycle while DTC for the same malfunction has been stored in PCM. • PENDING CODE is available if PCM detects the above malfunction condition during first drive cycle. • FREEZE FRAME DATA is available. • The DTC is stored in the PCM memory.
POSSIBLE CAUSE	• Short to power supply in wiring harness between rear HO2S terminal D and PCM terminal 2BE • Short circuit in rear HO2S or PCM • Rear HO2S heater malfunction • PCM malfunction

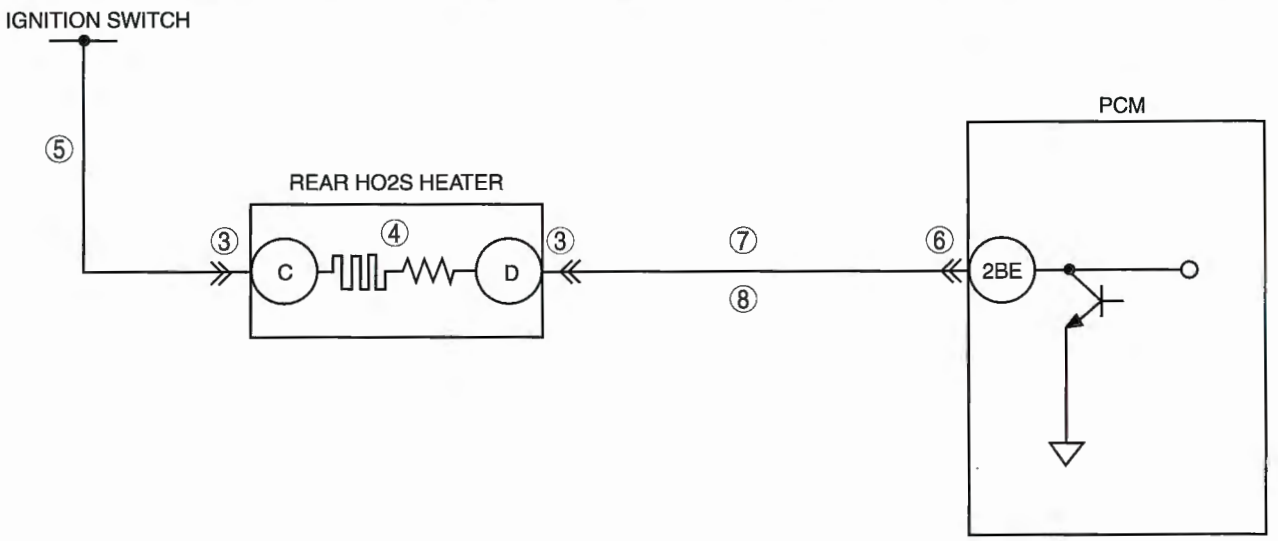

REAR HO2S
WIRING HARNESS-SIDE CONNECTOR

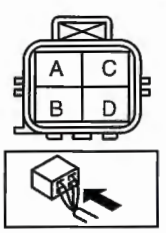

PCM
WIRING HARNESS-SIDE CONNECTOR

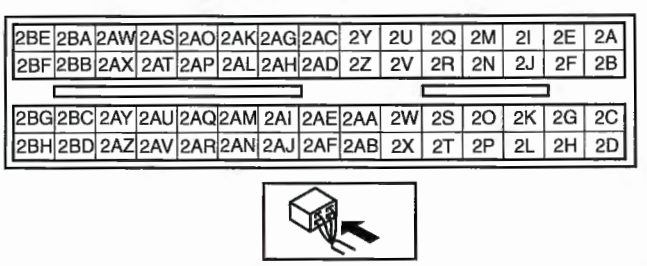

Diagnostic procedure

STEP	INSPECTION		ACTION
1	**VERIFY FREEZE FRAME DATA AND DIAGNOSTIC MONITORING TEST RESULTS HAVE BEEN RECORDED** • Have FREEZE FRAME DATA and DIAGNOSTIC MONITORING TEST RESULTS (HO2S heater related) been recorded?	Yes	Go to the next step.
		No	Record the FREEZE FRAME DATA and DIAGNOSTIC MONITORING TEST RESULTS on the repair order, then go to the next step.
2	**VERIFY RELATED REPAIR INFORMATION AVAILABILITY** • Verify related service Bulletins and/or on-line repair information availability. • Is any related repair information available?	Yes	Perform the repair or diagnosis according to the available repair information. • If the vehicle is not repaired, go to the next step.
		No	Go to the next step.
3	**INSPECT POOR CONNECTION OF REAR HO2S CONNECTOR** • Turn the ignition switch off. • Disconnect the rear HO2S connector. • Inspect for poor connection (such as damaged/ pulled-out pins, corrosion). • Is there any malfunction?	Yes	Repair or replace the terminal, then go to Step 9.
		No	Go to the next step.
4	**INSPECT REAR HO2S HEATER** • Inspect the rear HO2S heater. (See 01–40A–37 HEATED OXYGEN SENSOR (HO2S) INSPECTION [L3].) • Is rear HO2S heater normal?	Yes	Go to the next step.
		No	Replace the rear HO2S, then go to Step 9.
5	**INSPECT REAR HO2S HEATER POWER CIRCUIT FOR OPEN CIRCUIT** • Turn the ignition switch to the ON position. (Engine off). • Measure the voltage between rear HO2S terminal C (wiring harness-side) and body ground. • Is the voltage **B+**?	Yes	Go to the next step.
		No	Repair or replace the wiring harness for open circuit, then go to Step 9.
6	**INSPECT POOR CONNECTION OF PCM CONNECTOR** • Turn the ignition switch off. • Disconnect the PCM connector. • Inspect for poor connection (such as damaged/ pulled-out pins, corrosion). • Is there any malfunction?	Yes	Repair terminal, then go to Step 9.
		No	Go to the next step.
7	**INSPECT REAR HO2S HEATER CONTROL CIRCUIT FOR SHORT TO GROUND** • Inspect for continuity between rear HO2S terminal D (wiring harness-side) and body ground. • Is there continuity?	Yes	Repair or replace the wiring harness for short to ground, then go to Step 9.
		No	Go to the next step.
8	**INSPECT REAR HO2S HEATER CONTROL CIRCUIT FOR OPEN CIRCUIT** • Remove the PCM with the PCM connector connected. • Inspect for continuity between rear HO2S terminal D (wiring harness-side) and PCM terminal 2BE. • Is there continuity?	Yes	Go to the next step.
		No	Repair or replace the wiring harness for open circuit, then go to the next step.
9	**VERIFY TROUBLESHOOTING OF DTC P0038 COMPLETED** • Make sure to reconnect all disconnected connectors. • Clear the DTC from the PCM memory using the WDS or equivalent. • Perform the HO2S heater, HO2S, and TWC Repair Verification Drive Mode. (See 01–02A–13 OBD-II DRIVE MODE [L3].) • Is the PENDING CODE for this DTC present?	Yes	Replace the PCM, then go to the next step. (See 01–40A–9 PCM REMOVAL/INSTALLATION [L3].)
		No	Go to the next step.
10	**VERIFY AFTER REPAIR PROCEDURE** • Perform the "AFTER REPAIR PROCEDURE". (See 01–02A–12 AFTER REPAIR PROCEDURE [L3].) • Are any DTC present?	Yes	Go to the applicable DTC troubleshooting. (See 01–02A–18 DTC TABLE [L3].)
		No	Troubleshooting completed.

DTC P0043 [L3]

E6U010200001W08

DTC P0043	Rear HO2S heater circuit low input
DETECTION CONDITION	• The PCM monitors the rear HO2S heater control voltage when the PCM turns the rear HO2S heater off. If the control voltage **exceeds 25%** of the battery voltage, the PCM determines that the rear HO2S heater control circuit voltage is low. **Diagnostic support note** • This is a continuous monitor (HO2S heater). • MIL illuminates if PCM detects above malfunction condition in two consecutive drive cycles or in one drive cycle while DTC for the same malfunction has been stored in PCM. • PENDING CODE is available if PCM detects the above malfunction condition during first drive cycle. • FREEZE FRAME DATA is available. • The DTC is stored in the PCM memory.
POSSIBLE CAUSE	• Rear HO2S heater malfunction • Connector or terminal malfunction • Short to power supply in wiring harness between rear HO2S terminal D and PCM terminal 2BE • PCM malfunction

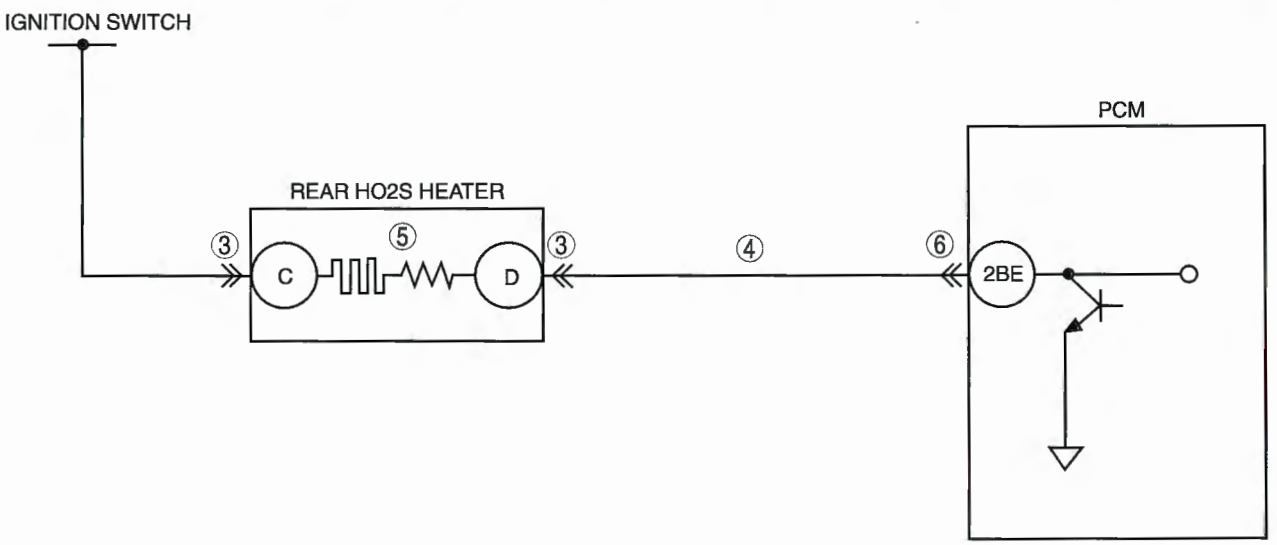

REAR HO2S
WIRING HARNESS-SIDE CONNECTOR

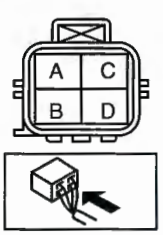

PCM
WIRING HARNESS-SIDE CONNECTOR

2BE	2BA	2AW	2AS	2AO	2AK	2AG	2AC	2Y	2U	2Q	2M	2I	2E	2A
2BF	2BB	2AX	2AT	2AP	2AL	2AH	2AD	2Z	2V	2R	2N	2J	2F	2B
2BG	2BC	2AY	2AU	2AQ	2AM	2AI	2AE	2AA	2W	2S	2O	2K	2G	2C
2BH	2BD	2AZ	2AV	2AR	2AN	2AJ	2AF	2AB	2X	2T	2P	2L	2H	2D

Diagnostic procedure

STEP	INSPECTION		ACTION
1	**VERIFY FREEZE FRAME DATA AND DIAGNOSTIC MONITORING TEST RESULTS HAVE BEEN RECORDED** • Have FREEZE FRAME DATA and DIAGNOSTIC MONITORING TEST RESULTS (HO2S heater related) been recorded?	Yes	Go to the next step.
		No	Record the FREEZE FRAME DATA and DIAGNOSTIC MONITORING TEST RESULTS on the repair order, then go to the next step.
2	**VERIFY RELATED REPAIR INFORMATION AVAILABILITY** • Verify related Service Bulletins and/or on-line repair information availability. • Is any related repair information available?	Yes	Perform repair or diagnosis according to the available repair information. • If the vehicle is not repaired, go to the next step.
		No	Go to the next step.
3	**INSPECT REAR HO2S CONNECTOR FOR POOR CONNECTION** • Turn the ignition switch off. • Disconnect the rear HO2S connector. • Inspect for poor connection (such as damaged/ pulled-out pins, and corrosion). • Is there any malfunction?	Yes	Repair or replace the terminal, then go to Step 7.
		No	Go to the next step.
4	**INSPECT REAR HO2S HEATER CONTROL CIRCUIT FOR SHORT TO POWER SUPPLY** • Turn the ignition switch to the ON position (Engine off). • Measure the voltage between rear HO2S terminal D (wiring harness-side) and body GND. • Is the voltage **B+**?	Yes	Repair or replace the wiring harness for a possible short to power supply, then go to Step 7.
		No	Go to the next step.
5	**INSPECT REAR HO2S HEATER** • Inspect the rear HO2S heater. (See 01–40A–37 HEATED OXYGEN SENSOR (HO2S) INSPECTION [L3].) • Is there any malfunction?	Yes	Replace the rear HO2S, then go to Step 7. (See 01–15A–2 EXHAUST SYSTEM REMOVAL/ INSTALLATION [L3].)
		No	Go to the next step.
6	**INSPECT PCM CONNECTOR FOR POOR CONNECTION** • Turn the ignition switch off. • Disconnect the PCM connector. • Inspect for poor connection (such as damaged/ pulled-out pins, and corrosion). • Is there any malfunction?	Yes	Repair or replace the terminal, then go to the next step.
		No	Go to the next step.
7	**VERIFY TROUBLESHOOTING OF DTC P0043 COMPLETED** • Make sure to reconnect all disconnected connectors. • Clear the DTC from the PCM memory using the WDS or equivalent. • Perform the HO2S heater, HO2S, and TWC Repair Verification Drive Mode. (See 01–02A–13 OBD-II DRIVE MODE [L3].) • Is the PENDING CODE for this DTC present?	Yes	Replace the PCM, then go to the next step. (See 01–40A–9 PCM REMOVAL/INSTALLATION [L3].)
		No	Go to the next step.
8	**VERIFY AFTER REPAIR PROCEDURE** • Perform the "AFTER REPAIR PROCEDURE". (See 01–02A–12 AFTER REPAIR PROCEDURE [L3].) • Are any DTCs present?	Yes	Go to the applicable DTC inspection. (See 01–02A–18 DTC TABLE [L3].)
		No	DTC troubleshooting completed.

DTC P0044 [L3]

E6U010200001W09

DTC P0044	Rear HO2S heater circuit high input
DETECTION CONDITION	• The PCM monitors the rear HO2S heater control voltage when the PCM turns the rear HO2S heater on. If the control voltage is **less than 57%** of the battery voltage, the PCM determines that the rear HO2S heater control circuit voltage is high. **Diagnostic support note** • This is a continuous monitor (HO2S heater). • MIL illuminates if PCM detects above malfunction condition in two consecutive drive cycles or in one drive cycle while DTC for the same malfunction has been stored in PCM. • PENDING CODE is available if PCM detects the above malfunction condition during first drive cycle. • FREEZE FRAME DATA is available. • The DTC is stored in the PCM memory.
POSSIBLE CAUSE	• Rear HO2S heater malfunction • Connector or terminal malfunction • Open circuit in wiring harness between ignition switch and rear HO2S terminal C • Short to GND in wiring harness between ignition switch and rear HO2S terminal C • Open circuit in wiring harness between front HO2S terminal D and PCM terminal 2BE • Short to GND in wiring harness between front HO2S terminal D and PCM terminal 2BE • PCM malfunction

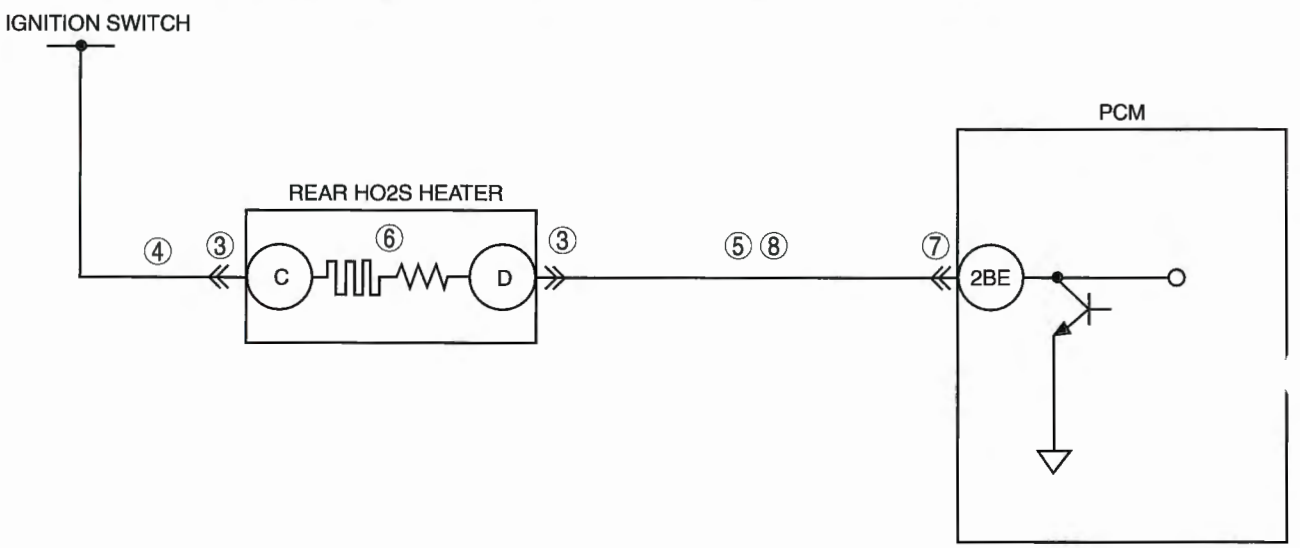

REAR HO2S
WIRING HARNESS-SIDE CONNECTOR

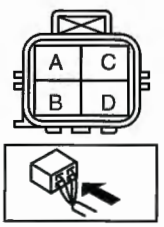

PCM
WIRING HARNESS-SIDE CONNECTOR

2BE	2BA	2AW	2AS	2AO	2AK	2AG	2AC	2Y	2U	2Q	2M	2I	2E	2A
2BF	2BB	2AX	2AT	2AP	2AL	2AH	2AD	2Z	2V	2R	2N	2J	2F	2B
2BG	2BC	2AY	2AU	2AQ	2AM	2AI	2AE	2AA	2W	2S	2O	2K	2G	2C
2BH	2BD	2AZ	2AV	2AR	2AN	2AJ	2AF	2AB	2X	2T	2P	2L	2H	2D

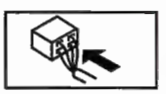

Diagnostic procedure

STEP	INSPECTION		ACTION
1	**VERIFY FREEZE FRAME DATA AND DIAGNOSTIC MONITORING TEST RESULTS HAVE BEEN RECORDED** • Have FREEZE FRAME DATA and DIAGNOSTIC MONITORING TEST RESULTS (HO2S heater related) been recorded?	Yes	Go to the next step.
		No	Record the FREEZE FRAME DATA and DIAGNOSTIC MONITORING TEST RESULTS on the repair order, then go to the next step.
2	**VERIFY RELATED REPAIR INFORMATION AVAILABILITY** • Verify related Service Bulletins and/or on-line repair information availability. • Is any related repair information available?	Yes	Perform repair or diagnosis according to the available repair information. • If the vehicle is not repaired, go to the next step.
		No	Go to the next step.
3	**INSPECT REAR HO2S CONNECTOR FOR POOR CONNECTION** • Turn the ignition switch off. • Disconnect the rear HO2S connector. • Inspect for poor connection (such as damaged/ pulled-out pins, and corrosion). • Is there any malfunction?	Yes	Repair or replace the terminal, then go to Step 9.
		No	Go to the next step.
4	**INSPECT REAR HO2S HEATER POWER CIRCUIT FOR OPEN CIRCUIT OR SHORT TO GND** • Turn the ignition switch to the ON position (Engine off). • Measure the voltage between rear HO2S terminal C (wiring harness-side) and body GND. • Is the voltage **B+**?	Yes	Go to the next step.
		No	Repair or replace the wiring harness for a possible open circuit or short to GND, then go to Step 9.
5	**INSPECT REAR HO2S HEATER CONTROL CIRCUIT FOR SHORT TO GND** • Turn the ignition switch off. • Inspect for continuity between rear HO2S terminal D (wiring harness-side) and body GND. • Is there continuity?	Yes	Repair or replace the wiring harness for a possible short to GND, then go to Step 9.
		No	Go to the next step.
6	**INSPECT REAR HO2S HEATER** • Inspect the rear HO2S heater. (See 01–40A–37 HEATED OXYGEN SENSOR (HO2S) INSPECTION [L3].) • Is there any malfunction?	Yes	Replace the rear HO2S, then go to Step 9. (See 01–15A–2 EXHAUST SYSTEM REMOVAL/ INSTALLATION [L3].)
		No	Go to the next step.
7	**INSPECT PCM CONNECTOR FOR POOR CONNECTION** • Turn the ignition switch off. • Disconnect the PCM connector. • Inspect for poor connection (such as damaged/ pulled-out pins, and corrosion). • Is there any malfunction?	Yes	Repair or replace the terminal, then go to Step 9.
		No	Go to the next step.
8	**INSPECT REAR HO2S HEATER CONTROL CIRCUIT FOR OPEN CIRCUIT** • Turn the ignition switch off. • Inspect for continuity between rear HO2S terminal D (wiring harness-side) and PCM terminal 2BE (wiring harness-side). • Is there continuity?	Yes	Go to the next step.
		No	Repair or replace the wiring harness for a possible open circuit, then go to the next step.
9	**VERIFY TROUBLESHOOTING OF DTC P0044 COMPLETED** • Make sure to reconnect all disconnected connectors. • Clear the DTC from the PCM memory using the WDS or equivalent. • Perform the HO2S heater, HO2S, and TWC Repair Verification Drive Mode. (See 01–02A–13 OBD-II DRIVE MODE [L3].) • Is the PENDING CODE for this DTC present?	Yes	Replace the PCM, then go to the next step. (See 01–40A–9 PCM REMOVAL/INSTALLATION [L3].)
		No	Go to the next step.
0	**VERIFY AFTER REPAIR PROCEDURE** • Perform the "AFTER REPAIR PROCEDURE". (See 01–02A–12 AFTER REPAIR PROCEDURE [L3].) • Are any DTCs present?	Yes	Go to the applicable DTC inspection. (See 01–02A–18 DTC TABLE [L3].)
		No	DTC troubleshooting completed.

DTC P0069 [L3]

E6U010200001W15

DTC P0069	Manifold absolute pressure/atmospheric pressure correlation
DETECTION CONDITION	• PCM monitors differences between intake manifold vacuum and atmospheric pressure. If the difference is **below –12 kPa {–90 mmHg, –3.5 inHg}** or **above 12 kPa {90 mmHg, 3.5 inHg}** when the following conditions are met, the PCM determines that there is a MAP sensor performance problem. **MONITORING CONDITION** — **12—15 s** from when ignition switch is turned off. — Intake air temperature is **above -10°C {14°F}**. — Engine coolant temperature is **above 70°C {158°F}**. **Diagnostic support note** • This is a continuous monitor (CCM). • MIL illuminates if the PCM detects the above malfunction condition in two consecutive drive cycles or in one drive cycle while the DTC for the same malfunction has been stored in PCM. • PENDING CODE is available if the PCM detects the above malfunction condition during the first drive cycle. • FREEZE FRAME DATA is available. • DTCs are stored in the PCM memory.
POSSIBLE CAUSE	• MAP sensor malfunction • BARO sensor malfunction • PCM malfunction

Diagnostic procedure

STEP	INSPECTION		ACTION
1	**VERIFY FREEZE FRAME DATA HAS BEEN RECORDED** • Has the FREEZE FRAME DATA been recorded?	Yes	Go to the next step.
		No	Record FREEZE FRAME DATA on the repair order, then go to the next step.
2	**VERIFY RELATED REPAIR INFORMATION AVAILABILITY** • Check for related Service Bulletins and/or on-line repair information availability. • Is any related repair information available?	Yes	Perform the repair or diagnosis according to the available repair information. • If the vehicle is not repaired, go to the next step.
		No	Go to the next step.
3	**VERIFY STORED DTC** • Turn the ignition switch to off then start the engine. • Have DTC P0107, P0108, P2228 or P2229 been stored?	Yes	Inspect and repair DTC P0107, P0108, P2228 or P2229.
		No	Go to the next step.
4	**IDENTIFY TRIGGER DTC FOR FREEZE FRAME DATA** • Is DTC P0069 on the FREEZE FRAME DATA?	Yes	Go to the next step.
		No	Go to troubleshooting procedures for the DTC on the FREEZE FRAME DATA.
5	**INSPECT MAP SENSOR STUCK OPEN OR CLOSED** • Inspect MAP sensor. (See 01–40A–36 MANIFOLD ABSOLUTE PRESSURE (MAP) SENSOR INSPECTION [L3].) • Is the MAP sensor normal?	Yes	Go to the next step.
		No	Replace the MAP sensor, then go to step 7.
6	**INSPECT BARO SENSOR** • Inspect the BARO sensor. (See 01–40A–50 BAROMETRIC PRESSURE (BARO) SENSOR INSPECTION [L3 (Vehicles equipped with BARO sensor built into PCM)].) • Is the BARO sensor normal?	Yes	Go to the next step.
		No	Replace the PCM, then go to the next step. (See 01–40A–9 PCM REMOVAL/INSTALLATION [L3].)
7	**VERIFY TROUBLESHOOTING OF DTC P0069 COMPLETED** • Make sure to reconnect all disconnected connectors. • Turn the ignition switch to the ON position (Engine off). • Clear the DTC from the memory using the WDS or equivalent. • Start the engine. • Is the same DTC present?	Yes	Replace the PCM, then go to the next step. (See 01–40A–9 PCM REMOVAL/INSTALLATION [L3].)
		No	Go to the next step.
8	**VERIFY AFTER REPAIR PROCEDURE** • Perform the "AFTER REPAIR PROCEDURE". (See 01–02A–12 AFTER REPAIR PROCEDURE [L3].) • Are any DTCs present?	Yes	Go to the applicable DTC inspection. (See 01–02A–18 DTC TABLE [L3].)
		No	DTC troubleshooting completed.

DTC P0101 [L3]

E6U010200100W01

DTC P0101	MAF circuit range/performance problem
DETECTION CONDITION	• PCM monitors the mass intake air flow amount when the engine is running. — If mass intake air amount is **above 50 l/s** for **5 s** and engine speed is **below 2,000 rpm** with engine running PCM determines that detected mass intake air flow amount is too high. — If mass intake air flow amount is **below 8—59 l/s*1, 6—58 l/s*2** (The value depends on engine speed.) for **5 s** and engine speed is **above 1,000 rpm** with engine running and throttle opening angle is **above 50%**, PCM determines that detected mass intake air flow amount is too low. **Diagnostic support note** • This is a continuous monitor (CCM). • MIL illuminates if PCM detects above malfunction condition in two consecutive drive cycles or in one drive cycle while DTC for the same malfunction has been stored in PCM. • PENDING CODE is available if PCM detects the above malfunction condition during first drive cycle. • FREEZE FRAME DATA is available. • DTC is stored in the PCM memory.
POSSIBLE CAUSE	• MAF sensor malfunction • Electrical corrosion in MAF RETURN circuit • Voltage drops in GND circuit

*1 : California emission regulation applicable ATX model
*2 : Except for California emission regulation applicable ATX model

Diagnostic procedure

STEP	INSPECTION		ACTION
1	**VERIFY FREEZE FRAME DATA HAS BEEN RECORDED** • Has FREEZE FRAME DATA been recorded?	Yes	Go to the next step.
		No	Record FREEZE FRAME DATA on repair order, then go to the next step.
2	**VERIFY RELATED REPAIR INFORMATION AVAILABILITY** • Check for related Service Bulletins and/or on-line repair information availability. • Is any related repair information available?	Yes	Perform repair or diagnosis according to the available repair information. • If the vehicle is not repaired, go to the next step.
		No	Go to the next step.
3	**VERIFY CURRENT INPUT SIGNAL STATUS IS CONCERN INTERMITTENT OR CONSTANT** • Connect WDS or equivalent to DLC-2. • Start the engine. • Access ECT, MAF, TP and RPM PIDs using the WDS or equivalent. • Warm-up engine until ECT PID is **above 70°C {158°F}**. • Idle engine for **5 s or more**. **Caution** • **While driving, always operate the vehicle in a safe and lawful manner.** • Drive the vehicle under the following two conditions: **Condition 1** — TP PID: **50—87.5%** — RPM PID: **above 1,000 rpm** — 4th gear (MTX), D range (ATX) **Condition 2** — TP PID: **above 80%** — RPM PID: **below 2,000 rpm** — gear in • Is PENDING CODE for this DTC present?	Yes	Go to the next step.
		No	Intermittent concern exists. Go to INTERMITTENT CONCERNS TROUBLESHOOTING procedure. (See 01–03A–7 INTERMITTENT CONCERN TROUBLESHOOTING [L3])
4	**CHECK MAF SENSOR TERMINALS FOR ELECTRICAL CORROSION** • Turn the ignition switch off. • Disconnect MAF sensor connector. • Check for poor connection (damaged, pulled-out terminals, corrosion, etc.). • Is any problem corrosion found?	Yes	Repair or replace suspected terminal or MAF sensor, then go to Step 6.
		No	Go to the next step.

STEP	INSPECTION		ACTION
5	**INSPECT PCM CONNECTOR FOR POOR CONNECTION** • Disconnect PCM connector. • Check for poor connection (damaged, pulled-out pins, corrosion, etc.). • Is there any malfunction?	Yes	Repair terminal, then go to the next step.
		No	Go to the next step.
6	**VERIFY TROUBLESHOOTING OF DTC P0101 COMPLETED** • Make sure to connect all disconnected connectors. • Turn ignition switch to ON (Engine off). • Clear the DTC from the PCM memory using the WDS or equivalent. • Start the engine. • Warm-up engine until ECT PID is **above 70°C {158°F}**. • Idle engine for **5 s or more**. **Caution** • **While performing the Drive Mode, always operate the vehicle in a safe and lawful manner.** • Drive the vehicle under the following two conditions: **Condition 1** — TP PID: **50—87.5%** — RPM PID: **above 1,000 rpm** — 4th gear (MTX), D range (ATX) **Condition 2** — TP PID: **above 80%** — RPM PID: **below 2,000 rpm** — gear in • Is PENDING CODE for this DTC present?	Yes	Replace PCM, then go to the next step.
		No	Go to the next step.
7	**VERIFY AFTER REPAIR PROCEDURE** • Perform the "After Repair Procedure". (See 01–02A–12 AFTER REPAIR PROCEDURE [L3]) • Is any DTC present?	Yes	Go to the applicable DTC inspection. (See 01–02A–18 DTC TABLE [L3])
		No	Troubleshooting completed.

DTC P0102 [L3]

E6U010200100W02

DTC P0102	MAF circuit low input
DETECTION CONDITION	• PCM monitors input voltage from MAF sensor when engine is running. If input voltage is **below 0.21 V**, PCM determines that MAF circuit has a malfunction. **Diagnostic support note** • This is a continuous monitor (CCM). • MIL illuminates if PCM detects the above malfunction condition during first drive cycle. • PENDING CODE is available if PCM detects the above malfunction condition. • FREEZE FRAME DATA is available. • DTC is stored in the PCM memory.
POSSIBLE CAUSE	• MAF sensor malfunction • Connector or terminal malfunction • Short to ground in wiring harness between MAF/IAT sensor terminal C and PCM terminal 1AK • Open circuit in wiring harness between MAF/IAT sensor terminal C and PCM terminal 1AK • Open circuit in wiring harness between main relay and MAF/IAT sensor terminal A • PCM malfunction

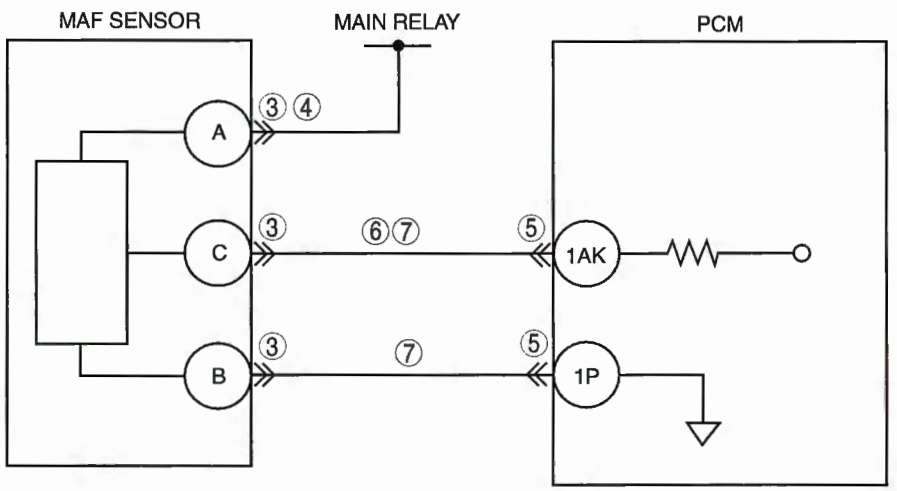

MAF/IAT SENSOR HARNESS SIDE CONNECTOR

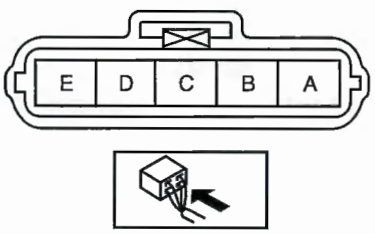

PCM WIRING HARNESS-SIDE CONNECTOR

1BE	1BA	1AW	1AS	1AO	1AK	1AG	1AC	1Y	1U	1Q	1M	1I	1E	1A
1BF	1BB	1AX	1AT	1AP	1AL	1AH	1AD	1Z	1V	1R	1N	1J	1F	1B
1BG	1BC	1AY	1AU	1AQ	1AM	1AI	1AE	1AA	1W	1S	1O	1K	1G	1C
1BH	1BD	1AZ	1AV	1AR	1AN	1AJ	1AF	1AB	1X	1T	1P	1L	1H	1D

Diagnostic procedure

STEP	INSPECTION		ACTION
1	**VERIFY FREEZE FRAME DATA HAS BEEN RECORDED** • Has FREEZE FRAME DATA been recorded?	Yes	Go to the next step.
		No	Record FREEZE FRAME DATA on repair order, then go to the next step.
2	**VERIFY RELATED REPAIR INFORMATION AVAILABILITY** • Check for related Service Bulletins and/or on-line repair information availability. • Is any related repair information available?	Yes	Perform repair or diagnosis according to the available repair information. • If the vehicle is not repaired, go to the next step.
		No	Go to the next step.
3	**INSPECT MAF SENSOR CONNECTOR FOR POOR CONNECTION** • Turn the ignition switch off. • Disconnect the MAF/IAT sensor connector. • Inspect for poor connection (such as damaged/ pulled-out pins, corrosion). • Is there any malfunction?	Yes	Repair or replace terminals, then go to Step 8.
		No	Go to the next step.
4	**INSPECT POWER SUPPLY CIRCUIT FOR OPEN CIRCUIT** • Turn ignition switch to ON (Engine off). • Inspect voltage at MAF/IAT sensor terminal A (wiring harness-side). • Is voltage **B+**?	Yes	Go to the next step.
		No	Inspect for open circuit in wiring harness between MAF/IAT sensor terminal A (wiring harness-side) and main relay. Repair or replace harness, then go to Step 8.
5	**INSPECT PCM CONNECTOR FOR POOR CONNECTION** • Turn the ignition switch off. • Disconnect PCM connector. • Inspect for poor connection (such as damaged/ pulled-out pins, corrosion). • Is there any malfunction?	Yes	Repair terminal, then go to Step 8.
		No	Go to the next step.
6	**INSPECT MAF SENSOR SIGNAL CIRCUIT FOR OPEN CIRCUIT** • Remove PCM with PCM connector connected. • Inspect for continuity between MAF/IAT sensor terminal C (wiring harness-side) and PCM terminal 1AK (wiring harness-side). • Is there continuity?	Yes	Go to the next step.
		No	Repair or replace suspected harness, then go to Step 8.
7	**INSPECT MAF SENSOR SIGNAL CIRCUIT FOR SHORT CIRCUIT** • Inspect continuity between following circuits: — MAF/IAT sensor terminal C (wiring harness-side) and body ground — MAF/IAT sensor connector terminal C and B (wiring harness-side) • Is there continuity?	Yes	Repair or replace suspected harness, then go to the next step.
		No	Replace MAF/IAT sensor, then go to the next step.
8	**VERIFY TROUBLESHOOTING OF DTC P0102 COMPLETED** • Make sure to reconnect all disconnected connectors. • Turn ignition switch to ON (Engine off). • Clear the DTC from the PCM memory using the WDS or equivalent. • Start engine and warm it up completely. • Is same DTC present?	Yes	Replace PCM, then go to the next step. (See 01–40A–9 PCM REMOVAL/INSTALLATION [L3].)
		No	Go to the next step.
9	**VERIFY AFTER REPAIR PROCEDURE** • Perform the "After Repair Procedure". (See 01–02A–12 AFTER REPAIR PROCEDURE [L3].) • Is any DTC present?	Yes	Go to the applicable DTC inspection. (See 01–02A–18 DTC TABLE [L3].)
		No	Troubleshooting completed.

DTC P0103 [L3]

E6U010200100W03

DTC P0103	MAF circuit high input
DETECTION CONDITION	• PCM monitors input voltage from MAF sensor when engine is running. If input voltage at PCM terminal 1AK is **above 4.9 V**, PCM determines that MAF circuit has a malfunction. **Diagnostic support note** • This is a continuous monitor (CCM). • MIL illuminates if PCM detects the above malfunction condition during first drive cycle. • PENDING CODE is available if PCM detects the above malfunction condition. • FREEZE FRAME DATA is available. • DTC is stored in the PCM memory.
POSSIBLE CAUSE	• MAF sensor malfunction • Connector or terminal malfunction • Short to power supply in wiring harness between MAF/IAT sensor terminal C and PCM terminal1AK • Open circuit in MAF/IAT sensor ground circuit • PCM malfunction

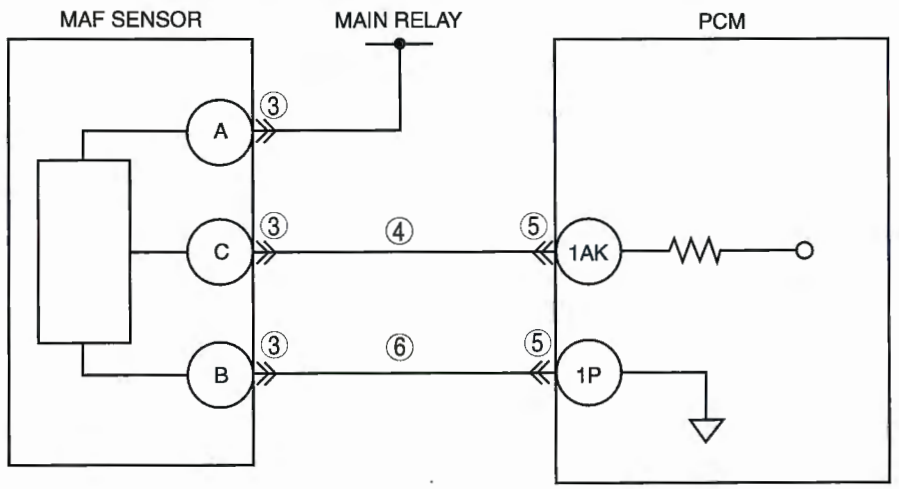

MAF/IAT SENSOR
HARNESS SIDE CONNECTOR

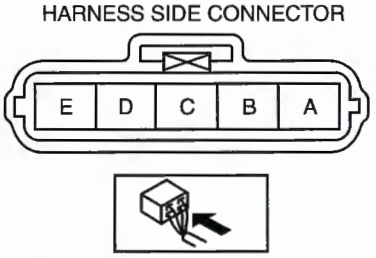

PCM
WIRING HARNESS-SIDE CONNECTOR

1BE	1BA	1AW	1AS	1AO	1AK	1AG	1AC	1Y	1U	1Q	1M	1I	1E	1A
1BF	1BB	1AX	1AT	1AP	1AL	1AH	1AD	1Z	1V	1R	1N	1J	1F	1B
1BG	1BC	1AY	1AU	1AQ	1AM	1AI	1AE	1AA	1W	1S	1O	1K	1G	1C
1BH	1BD	1AZ	1AV	1AR	1AN	1AJ	1AF	1AB	1X	1T	1P	1L	1H	1D

Diagnostic procedure

STEP	INSPECTION		ACTION
1	**VERIFY FREEZE FRAME DATA HAS BEEN RECORDED** • Has FREEZE FRAME DATA been recorded?	Yes	Go to the next step.
		No	Record FREEZE FRAME DATA on repair order, then go to the next step.
2	**VERIFY RELATED REPAIR INFORMATION AVAILABILITY** • Check for related Service Bulletins and/or on-line repair information availability. • Is any related repair information available?	Yes	Perform repair or diagnosis according to the available repair information. • If the vehicle is not repaired, go to the next step.
		No	Go to the next step.
3	**INSPECT MAF SENSOR CONNECTOR FOR POOR CONNECTION** • Turn the ignition switch off. • Disconnect the MAF/IAT sensor connector. • Inspect for poor connection (such as damaged/ pulled-out pins, corrosion). • Is there any malfunction?	Yes	Repair or replace terminals, then go to Step 7.
		No	Go to the next step.
4	**INSPECT MAF SIGNAL CIRCUIT FOR SHORT TO POWER SUPPLY** • Turn ignition switch to ON (Engine off). • Measure voltage between MAF/IAT sensor terminal C (wiring harness-side) and body ground. • Is voltage **0 V**?	Yes	Go to the next step.
		No	Repair or replace suspected harness, then go to Step 7.
5	**INSPECT PCM CONNECTOR FOR POOR CONNECTION** • Turn the ignition switch off. • Disconnect PCM connector. • Inspect for poor connection (such as damaged/ pulled-out pins, corrosion). • Is there any malfunction?	Yes	Repair terminal, then go to Step 7.
		No	Go to the next step.
6	**INSPECT MAF SENSOR GROUND CIRCUIT FOR OPEN CIRCUIT** • Remove PCM with PCM connector connected. • Inspect for continuity between MAF/IAT sensor terminal B (wiring harness-side) and GND. • Is there continuity?	Yes	Replace MAF/IAT sensor, then go to the next step.
		No	Repair or replace suspected harness, then go to the next step.
7	**VERIFY TROUBLESHOOTING OF DTC P0103 COMPLETED** • Make sure to reconnect all disconnected connectors. • Turn ignition switch to ON (Engine off). • Clear the DTC from the PCM memory using the WDS or equivalent. • Start engine and warm it up completely. • Is same DTC present?	Yes	Replace PCM, then go to the next step. (See 01–40A–9 PCM REMOVAL/INSTALLATION [L3].)
		No	Go to the next step.
8	**VERIFY AFTER REPAIR PROCEDURE** • Perform the "After Repair Procedure". (See 01–02A–12 AFTER REPAIR PROCEDURE [L3].) • Is any DTC present?	Yes	Go to the applicable DTC inspection. (See 01–02A–18 DTC TABLE [L3].)
		No	Troubleshooting completed.

DTC P0107 [L3]

E6U010200100W05

DTC P0107	MAP sensor circuit low input
DETECTION CONDITION	• PCM monitors input voltage from MAP sensor when intake air temperature is **above –10 °C {14 °F}**. If input voltage is **below 0.10 V**, PCM determines that MAP sensor circuit has a malfunction. **MONITORING CONDITIONS** — Calculated load: **13—32 %** **Diagnostic support note** • This is a continuous monitor (CCM). • MIL illuminates if PCM detects the above malfunction condition during first drive cycle. • PENDING CODE is available if PCM detects the above malfunction condition. • FREEZE FRAME DATA is available. • DTC is stored in the PCM memory.
POSSIBLE CAUSE	• MAP sensor malfunction • Connector or terminal malfunction • Short to ground in wiring harness between MAP sensor terminal D and PCM terminal 2AG • Open circuit in wiring harness between MAP sensor terminal C and PCM terminal 2AU • MAP sensor signal circuit and MAP sensor ground circuit are shorted each other. • PCM malfunction

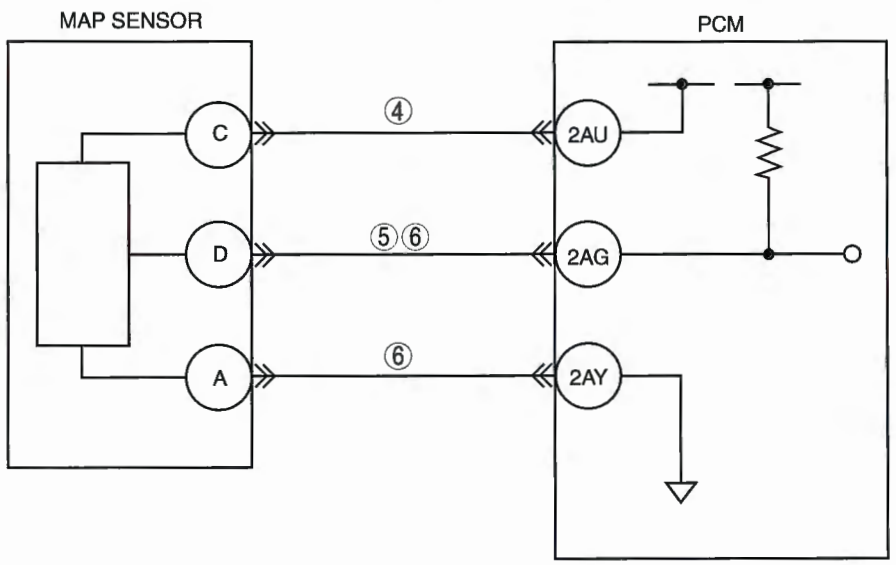

MAP SENSOR
HARNESS SIDE CONNECTOR

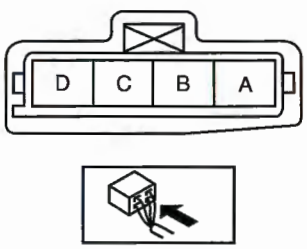

PCM
WIRING HARNESS-SIDE CONNECTOR

2BE	2BA	2AW	2AS	2AO	2AK	2AG	2AC	2Y	2U	2Q	2M	2I	2E	2A
2BF	2BB	2AX	2AT	2AP	2AL	2AH	2AD	2Z	2V	2R	2N	2J	2F	2B
2BG	2BC	2AY	2AU	2AQ	2AM	2AI	2AE	2AA	2W	2S	2O	2K	2G	2C
2BH	2BD	2AZ	2AV	2AR	2AN	2AJ	2AF	2AB	2X	2T	2P	2L	2H	2D

Diagnostic procedure

STEP	INSPECTION		ACTION
1	**VERIFY FREEZE FRAME DATA HAS BEEN RECORDED** • Has FREEZE FRAME DATA been recorded?	Yes	Go to the next step.
		No	Recorded FREEZE FRAME DATA on repair order, then go to the next step.
2	**VERIFY RELATED REPAIR INFORMATION AVAILABILITY** • Check for related Service Bulletins and/or on-line repair information availability. • Is any related repair information available?	Yes	Perform repair or diagnosis according to the available repair information. • If the vehicle is not repaired, go to the next step.
		No	Go to the next step.
3	**VERIFY MAP PID WHEN MAP SENSOR CONNECTOR IS DISCONNECTED** • Disconnect MAP sensor connector. • Is voltage **above 4.9 V?**	Yes	Go to the next step.
		No	Go to step 5.
4	**INSPECT POWER SUPPLY CIRCUIT VOLTAGE AT MAP SENSOR CONNECTOR** **Note** • If DTC P0122 and P2228 are also retrieved with P0107, go to CONSTANT VOLTAGE troubleshooting procedure. • Turn ignition switch to ON (Engine off). • Measure voltage between MAP sensor terminal C (wiring harness-side) and body ground. • Is voltage **within 4.5—5.5 V?**	Yes	Check for poor connection of MAP sensor terminal C (wiring harness-side). • Repair or replace terminal if necessary. • If normal, replace MAP sensor. Then go to Step 7.
		No	Check for open circuit between PCM terminal 2AU (wiring harness-side) and MAP sensor terminal C (wiring harness-side). Repair or replace suspected harness, then go to Step 7.
5	**INSPECT MAP SENSOR SIGNAL CIRCUIT FOR SHORT TO GROUND** • Turn the ignition switch off. • Disconnect PCM connector. • Inspect continuity between MAP sensor terminal D (wiring harness-side) and body ground. • Is there continuity?	Yes	Repair or replace suspected harness, then go to Step 7.
		No	Go to the next step.
6	**INSPECT MAP SENSOR SIGNAL AND GROUND CIRCUIT FOR SHORT EACH OTHER** • Check continuity between MAP sensor terminals D and A (wiring harness-side). • Is there continuity?	Yes	Repair or replace suspected harness, then go to the next step.
		No	Go to the next step.
7	**VERIFY TROUBLESHOOTING OF DTC P0107 COMPLETED** • Make sure to reconnect all disconnected connectors. • Turn ignition switch to ON (Engine off). • Clear the DTC from the PCM memory using the WDS or equivalent. • Start engine and warm it up completely. • Is same DTC present?	Yes	Replace PCM, then go to the next step. (See 01–40A–9 PCM REMOVAL/INSTALLATION [L3].)
		No	Go to the next step.
8	**VERIFY AFTER REPAIR PROCEDURE** • Perform the "After Repair Procedure". (See 01–02A–12 AFTER REPAIR PROCEDURE [L3].) • Is any DTC present?	Yes	Go to the applicable DTC inspection. (See 01–02A–18 DTC TABLE [L3].)
		No	Troubleshooting completed.

DTC P0108 [L3]

E6U010200100W06

DTC P0108	MAP sensor circuit high input
DETECTION CONDITION	• PCM monitors input voltage from MAP sensor when intake air temperature is **above –10 °C {14 °F}**. If input voltage is **above 4.92 V**, PCM determines that MAP sensor circuit has a malfunction. **MONITORING CONDITIONS** — Calculated load: **13—32 %** **Diagnostic support note** • This is a continuous monitor (CCM). • MIL illuminates if PCM detects the above malfunction condition during first drive cycle. • PENDING CODE is available if PCM detects the above malfunction condition. • FREEZE FRAME DATA is available. • DTC is stored in the PCM memory.
POSSIBLE CAUSE	• MAP sensor malfunction • Connector or terminal malfunction • Open circuit in wiring harness between MAP sensor terminal A and PCM terminal 2AY • Open circuit in wiring harness between MAP sensor terminal D and PCM terminal 2AG • MAP sensor signal circuit short to constant voltage supply circuit • PCM malfunction

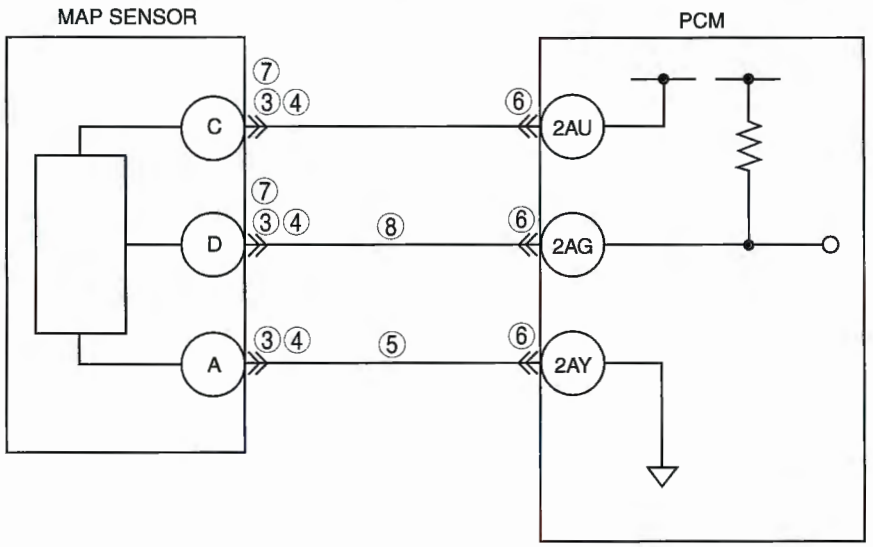

MAP SENSOR
HARNESS SIDE CONNECTOR

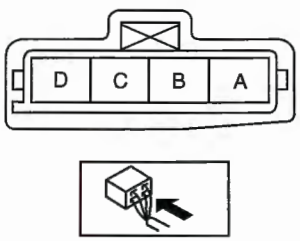

PCM
WIRING HARNESS-SIDE CONNECTOR

2BE	2BA	2AW	2AS	2AO	2AK	2AG	2AC	2Y	2U	2Q	2M	2I	2E	2A
2BF	2BB	2AX	2AT	2AP	2AL	2AH	2AD	2Z	2V	2R	2N	2J	2F	2B
2BG	2BC	2AY	2AU	2AQ	2AM	2AI	2AE	2AA	2W	2S	2O	2K	2G	2C
2BH	2BD	2AZ	2AV	2AR	2AN	2AJ	2AF	2AB	2X	2T	2P	2L	2H	2D

Diagnostic procedure

STEP	INSPECTION		ACTION
1	**VERIFY FREEZE FRAME DATA HAS BEEN RECORDED** • Has FREEZE FRAME DATA been recorded?	Yes	Go to the next step.
		No	Record FREEZE FRAME DATA on repair order, then go to the next step.
2	**VERIFY RELATED REPAIR INFORMATION AVAILABILITY** • Check for related Service Bulletins and/or on-line repair information availability. • Is any related repair information available?	Yes	Perform repair or diagnosis according to the available repair information. • If the vehicle is not repaired, go to the next step.
		No	Go to the next step.
3	**INSPECT CONNECTION OF MAP SENSOR CONNECTOR** • Turn the ignition switch off. • Verify that the MAP sensor connector is connected securely. • Is connection normal?	Yes	Go to the next step.
		No	Reconnect the connector, then go to Step 9.
4	**INSPECT MAP SENSOR CONNECTOR FOR POOR CONNECTION** • Disconnect the MAP sensor connector. • Inspect for poor connection (such as damaged/pulled-out pins, corrosion). • Is there any malfunction?	Yes	Repair or replace suspected terminal, then go to Step 9.
		No	Go to the next step.
5	**VERIFY MAP SENSOR GROUND CIRCUIT FOR OPEN CIRCUIT** • Inspect continuity between MAP sensor terminal A (wiring harness-side) and body ground. • Is there continuity?	Yes	Go to the next step.
		No	Inspect for open circuit between PCM terminal 2AY (wiring harness-side) and MAP sensor terminal A (wiring harness-side). Repair or replace suspected harness, then go to Step 9.
6	**INSPECT PCM CONNECTOR FOR POOR CONNECTION** • Disconnect PCM connector. • Inspect for poor connection at terminal 2AY (such as damaged, pulled-out pins, corrosion). • Is there any malfunction?	Yes	Repair terminal, then go to Step 9.
		No	Go to the next step.
7	**VERIFY MAP SENSOR SIGNAL CIRCUIT FOR SHORT TO CONSTANT VOLTAGE CIRCUIT** • Inspect for continuity between MAP sensor terminal D and C (wiring harness-side). • Is there continuity?	Yes	Repair or replace suspected harness, then go to Step 9.
		No	Go to the next step.
8	**VERIFY MAP SENSOR SIGNAL CIRCUIT FOR OPEN CIRCUIT** • Inspect continuity between MAP sensor terminal D (wiring harness-side) and PCM terminal 2AG (wiring harness-side). • Is there continuity?	Yes	Go to the next step.
		No	Repair or replace suspected harness, then go to the next step.
9	**VERIFY TROUBLESHOOTING OF DTC P0108 COMPLETED** • Make sure to reconnect all disconnected connectors. • Turn ignition switch to ON (Engine off). • Clear the DTC from the PCM memory using the WDS or equivalent. • Start engine and warm it up completely. • Is same DTC present?	Yes	Replace PCM, then go to the next step. (See 01–40A–9 PCM REMOVAL/INSTALLATION [L3].)
		No	Go to the next step.
10	**VERIFY AFTER REPAIR PROCEDURE** • Perform the "After Repair Procedure". (See 01–02A–12 AFTER REPAIR PROCEDURE [L3].) • Is any DTC present?	Yes	Go to applicable inspection. (See 01–02A–18 DTC TABLE [L3].)
		No	Troubleshooting completed.

DTC P0111 [L3]

E6U010200100W07

DTC P0111	IAT circuit performance problem
DETECTION CONDITION	• If intake air temperature is higher than engine coolant temperature by **18 °C {32.4 °F} for 1.2 s** with ignition switch on*, the PCM determines that there is a intake air temperature sensor circuit range/performance problem. *: Ignition switch on when **6 h** or more has passed since the previous ignition switch off **Diagnostic support note** • This is a continuous monitor (CCM). • MIL illuminates if PCM detects above malfunction condition in two consecutive drive cycles or in one drive cycle while DTC for the same malfunction has been stored in PCM. • PENDING CODE is available if PCM detects the above malfunction condition during first drive cycle. • FREEZE FRAME DATA is available. • DTC is stored in PCM memory.
POSSIBLE CAUSE	• IAT sensor malfunction • Poor connection at MAF/IAT sensor or PCM connector • PCM malfunction

Diagnostic procedure

STEP	INSPECTION		ACTION
1	**VERIFY FREEZE FRAME DATA HAS BEEN RECORDED** • Has FREEZE FRAME DATA been recorded?	Yes	Go to the next step.
		No	Record FREEZE FRAME DATA on repair order, then go to the next step.
2	**VERIFY RELATED REPAIR INFORMATION AVAILABILITY** • Check for related Service Bulletins and/or on-line repair information availability. • Is any related repair information available?	Yes	Perform repair or diagnosis according to the available repair information. • If the vehicle is not repaired, go to the next step.
		No	Go to the next step.
3	**INSPECT MAF/IAT SENSOR CONNECTOR FOR POOR CONNECTION** • Turn the ignition switch off. • Disconnect MAF/IAT sensor connector. • Inspect for poor connection (such as damaged/ pulled-out pins, corrosion). • Is there any malfunction?	Yes	Repair or replace the terminal, then go to Step 6.
		No	Go to the next step.
4	**INSPECT IAT SENSOR** • Inspect IAT sensor. (See 01–40A–33 INTAKE AIR TEMPERATURE (IAT) SENSOR INSPECTION [L3].) • Is IAT sensor normal?	Yes	Replace MAF/IAT sensor, then go to Step 6.
		No	Go to the next step.
5	**INSPECT PCM CONNECTOR FOR POOR CONNECTION** • Disconnect PCM connector. • Inspect for poor connection (such as damaged/ pulled-out pins, corrosion). • Is there any malfunction?	Yes	Repair or replace the terminal, then go to Step 6.
		No	Go to the next step.
6	**VERIFY TROUBLESHOOTING OF DTC P0111 COMPLETED** • Make sure to reconnect all disconnected connectors. • Clear the DTC from the PCM memory using the WDS or equivalent. • Start engine and run engine under FREEZE FRAME DATA condition. • Is PENDING CODE for this DTC present?	Yes	Replace PCM, then go to the next step. (See 01–40A–9 PCM REMOVAL/INSTALLATION [L3].)
		No	Go to the next step.
7	**VERIFY AFTER REPAIR PROCEDURE** • Perform "After Repair Procedure". (See 01–02A–12 AFTER REPAIR PROCEDURE [L3].) • Is any DTC present?	Yes	Go to the applicable DTC inspection. (See 01–02A–18 DTC TABLE [L3].)
		No	Troubleshooting completed.

DTC P0112 [L3]

E6U010200100W08

DTC P0112	IAT circuit low input
DETECTION CONDITION	• The PCM monitors IAT sensor signal. If the PCM detected IAT sensor voltage **below 0.16 V**, the PCM determines that the IAT sensor circuit has malfunction. **Diagnostic support note** • This is a continuous monitor (CCM). • MIL illuminates if PCM detects the above malfunction condition during first drive cycle. • PENDING CODE is available if PCM detects the above malfunction condition. • FREEZE FRAME DATA is available. • DTC is stored in the PCM memory.
POSSIBLE CAUSE	• IAT sensor malfunction • Poor connection at MAF/IAT sensor or PCM connector • Short to ground between MAF/IAT sensor terminal D and PCM terminal 1AT • Short each harness IAT signal circuit and IAT ground circuit. • PCM malfunction

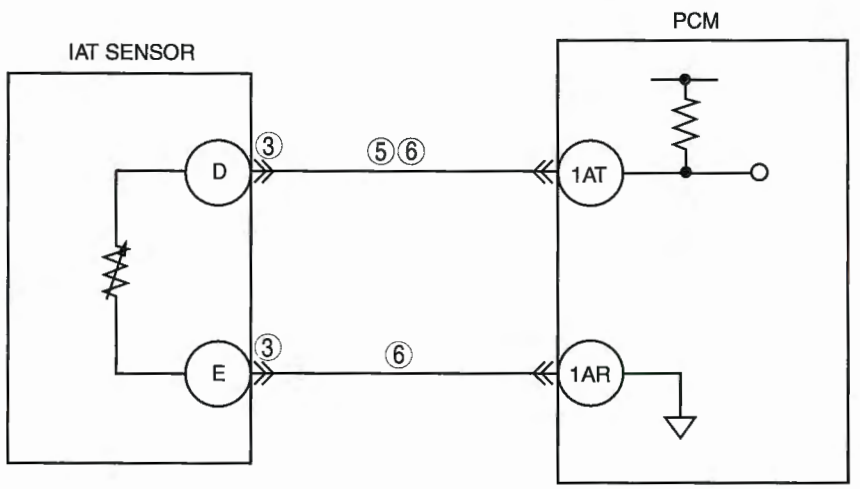

MAF/IAT SENSOR
HARNESS SIDE CONNECTOR

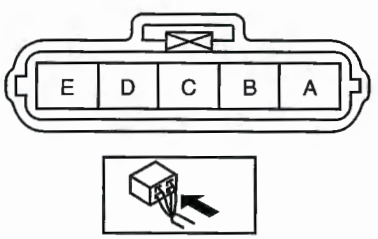

PCM
WIRING HARNESS-SIDE CONNECTOR

1BE	1BA	1AW	1AS	1AO	1AK	1AG	1AC	1Y	1U	1Q	1M	1I	1E	1A
1BF	1BB	1AX	1AT	1AP	1AL	1AH	1AD	1Z	1V	1R	1N	1J	1F	1B
1BG	1BC	1AY	1AU	1AQ	1AM	1AI	1AE	1AA	1W	1S	1O	1K	1G	1C
1BH	1BD	1AZ	1AV	1AR	1AN	1AJ	1AF	1AB	1X	1T	1P	1L	1H	1D

Diagnostic procedure

STEP	INSPECTION		ACTION
1	**VERIFY FREEZE FRAME DATA HAS BEEN RECORDED** • Has FREEZE FRAME DATA been recorded?	Yes	Go to the next step.
		No	Record FREEZE FRAME DATA on repair order, then go to the next step.
2	**VERIFY RELATED REPAIR INFORMATION AVAILABILITY** • Check for related Service Bulletins and/or on-line repair information availability. • Is any related repair information available?	Yes	Perform repair or diagnosis according to the available repair information. • If the vehicle is not repaired, go to the next step.
		No	Go to the next step.
3	**INSPECT IAT SENSOR TERMINAL** • Turn the ignition switch off. • Disconnect MAF/IAT sensor connector. • Inspect for bent terminal of MAF/IAT sensor terminals D and E (part-side). • Is there any malfunction?	Yes	Repair or replace the terminal, then go to Step 7.
		No	Go to the next step.
4	**CLASSIFY IAT SENSOR MALFUNCTION OR HARNESS MALFUNCTION** • Connect WDS or equivalent to DLC-2. • Access IAT PID. • Verify IAT value when disconnecting MAF/IAT sensor connector. • Does IAT value change?	Yes	Replace MAF/IAT sensor, then go to Step 7.
		No	Go to the next step.
5	**INSPECT IAT SIGNAL CIRCUIT FOR SHORT TO GROUND** • Turn the ignition switch off. • Disconnect PCM connector. • Inspect continuity between MAF/IAT sensor terminal D (wiring harness-side) and body ground. • Is there continuity?	Yes	Repair or replace harness for short to ground, then go to Step 7.
		No	Go to the next step.
6	**INSPECT IAT CIRCUITS FOR SHORT** • Inspect continuity between MAF/IAT sensor terminals D and E (wiring harness-side). • Is there continuity?	Yes	Repair or replace harness for short, then go to Step 7.
		No	Go to the next step.
7	**VERIFY TROUBLESHOOTING OF DTC P0112 COMPLETED** • Make sure to reconnect all disconnected connectors. • Turn ignition switch to ON (Engine off). • Clear the DTC from the PCM memory using the WDS or equivalent. • Start engine and warm it up completely. • Is same DTC present?	Yes	Replace PCM, then go to the next step. (See 01–40A–9 PCM REMOVAL/INSTALLATION [L3].)
		No	Go to the next step.
8	**VERIFY AFTER REPAIR PROCEDURE** • Perform the "After Repair Procedure". (See 01–02A–12 AFTER REPAIR PROCEDURE [L3].) • Is any DTC present?	Yes	Go to the applicable DTC inspection. (See 01–02A–18 DTC TABLE [L3].)
		No	Troubleshooting completed.

DTC P0113 [L3]

E6U010200100W09

DTC P0113	IAT circuit high input
DETECTION CONDITION	• The PCM monitors IAT sensor signal. If the PCM detected IAT sensor voltage **above 4.84 V**, the PCM determines that the IAT sensor circuit has malfunction. **Diagnostic support note** • This is a continuous monitor (CCM). • MIL illuminates if PCM detects the above malfunction condition during first drive cycle. • PENDING CODE is available if PCM detects the above malfunction condition. • FREEZE FRAME DATA is available. • DTC is stored in the PCM memory.
POSSIBLE CAUSE	• IAT sensor malfunction • Open circuit between MAF/IAT sensor terminal D and PCM terminal 1AT • Short to power supply between MAF/IAT sensor terminal D and PCM terminal 1AT • Open circuit between MAF/IAT sensor terminal E and PCM terminal 1AR • Poor connection at MAF/IAT sensor or PCM connector. • PCM malfunction

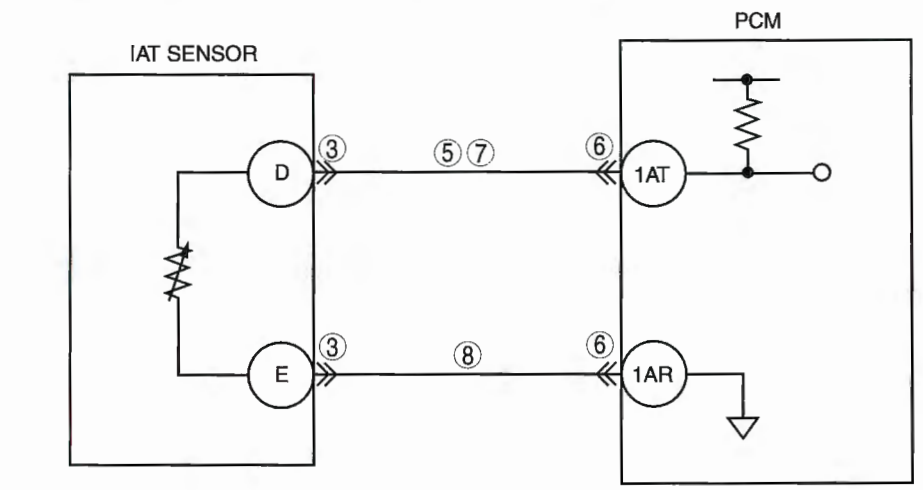

MAF/IAT SENSOR
HARNESS SIDE CONNECTOR

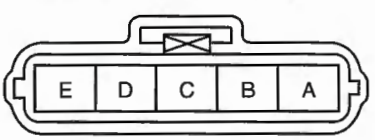

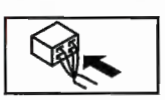

PCM
WIRING HARNESS-SIDE CONNECTOR

1BE	1BA	1AW	1AS	1AO	1AK	1AG	1AC	1Y	1U	1Q	1M	1I	1E	1A
1BF	1BB	1AX	1AT	1AP	1AL	1AH	1AD	1Z	1V	1R	1N	1J	1F	1B
1BG	1BC	1AY	1AU	1AQ	1AM	1AI	1AE	1AA	1W	1S	1O	1K	1G	1C
1BH	1BD	1AZ	1AV	1AR	1AN	1AJ	1AF	1AB	1X	1T	1P	1L	1H	1D

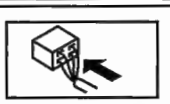

Diagnostic procedure

STEP	INSPECTION		ACTION
1	**VERIFY FREEZE FRAME DATA HAS BEEN RECORDED** • Has FREEZE FRAME DATA been recorded?	Yes	Go to the next step.
		No	Record FREEZE FRAME DATA on repair order, then go to the next step.
2	**VERIFY RELATED REPAIR INFORMATION AVAILABILITY** • Check for related Service Bulletins and/or on-line repair information availability. • Is any related repair information available?	Yes	Perform repair or diagnosis according to the available repair information. • If the vehicle is not repaired, go to the next step.
		No	Go to the next step.
3	**INSPECT IAT SENSOR CONNECTOR FOR POOR CONNECTION** • Turn the ignition switch off. • Disconnect MAF/IAT sensor connector. • Inspect for poor connection (such as damaged/ pulled-out pins, corrosion). • Is there any malfunction?	Yes	Repair or replace the terminal, then go to Step 9.
		No	Go to the next step.
4	**CLASSIFY IAT SENSOR MALFUNCTION OR HARNESS MALFUNCTION** • Connect WDS or equivalent to DLC-2. • Access IAT PID. • Connect a jumper wire between MAF/IAT sensor terminals D and E (wiring harness-side). • Verify IAT value. • Is voltage **below 4.9 V**?	Yes	Replace MAF/IAT sensor, then go to Step 9.
		No	Go to the next step.
5	**INSPECT IAT SENSOR SIGNAL CIRCUIT FOR SHORT TO POWER SUPPLY** • Turn ignition switch to ON (Engine off). • Measure voltage between MAF/IAT sensor terminal D (wiring harness-side) and body ground. • Is voltage **B+**?	Yes	Repair or replace harness for short to power supply, then go to Step 9.
		No	Go to the next step.
6	**INSPECT PCM CONNECTOR FOR POOR CONNECTION** • Turn the ignition switch off. • Disconnect PCM connector. • Inspect PCM terminals 1AT and 1AR (wiring harness-side) for tightness using feeler tool. • Is there any malfunction?	Yes	Repair or replace the terminal, then go to Step 9.
		No	Go to the next step.
7	**INSPECT IAT SENSOR SIGNAL CIRCUIT FOR OPEN CIRCUIT** • Inspect continuity between MAF/IAT sensor terminal D (wiring harness-side) and PCM terminal 1AT (wiring harness-side). • Is there continuity?	Yes	Go to the next step.
		No	Repair or replace harness for open circuit, then go to Step 9.
8	**INSPECT IAT SENSOR GROUND CIRCUIT FOR OPEN CIRCUIT** • Inspect continuity between MAF/IAT sensor terminal E (wiring harness-side) and PCM terminal 1AR (wiring harness-side). • Is there continuity?	Yes	Go to the next step.
		No	Repair or replace harness for open circuit, then go to the next step.
9	**VERIFY TROUBLESHOOTING OF DTC P0113 COMPLETED** • Make sure to reconnect all disconnected connectors. • Turn ignition switch to ON (Engine off). • Clear the DTC from the PCM memory using the WDS or equivalent. • Start engine and warm it up completely. • Is same DTC present?	Yes	Replace PCM, then go to the next step. (See 01–40A–9 PCM REMOVAL/INSTALLATION [L3].)
		No	Go to the next step.
10	**VERIFY AFTER REPAIR PROCEDURE** • Perform the "After Repair Procedure". (See 01–02A–12 AFTER REPAIR PROCEDURE [L3].) • Is any DTC present?	Yes	Go to the applicable DTC inspection. (See 01–02A–18 DTC TABLE [L3].)
		No	Troubleshooting completed.

DTC P0116 [L3]

E6U010200100W31

DTC P0116	Engine coolant temperature circuit range/performance
DETECTION CONDITION	• The PCM monitors the maximum value and minimum value of engine coolant temperature when the engir is started and **5 min** have been passed after leaving the vehicle **6 h or more**. If difference between maximum and minimum values of engine coolant temperature is **below 6 °C {10.8 °F}** the PCM determines that there is an ECT circuit range/performance problem. **Diagnostic support note** • This is a continuous monitor. (Engine cooling system) • The MIL illuminates if the PCM detects the above malfunction condition during the first drive cycle. • PENDING CODE is available if the PCM detects the above malfunction condition. • FREEZE FRAME DATA is available. • DTC is stored in the PCM memory.
POSSIBLE CAUSE	• ECT sensor malfunction • Connector or terminal malfunction • PCM malfunction

Diagnostic procedure

STEP	INSPECTION		ACTION
1	**VERIFY FREEZE FRAME DATA AND DIAGNOSTIC MONITORING TEST RESULTS HAVE BEEN RECORDED** • Have FREEZE FRAME DATA and DIAGNOSTIC MONITORING TEST RESULTS (Engine cooling system related) been recorded?	Yes	Go to the next step.
		No	Record the FREEZE FRAME DATA and DIAGNOSTIC MONITORING TEST RESULTS on the repair order, then go to the next step.
2	**VERIFY RELATED REPAIR INFORMATION AVAILABILITY** • Verify related Service Bulletins and/or on-line repair information availability. • Is any related repair information available?	Yes	Perform repair or diagnosis according to the available repair information. If the vehicle is not repaired, go to next step.
		No	Go to the next step.
3	**IDENTIFY TRIGGER DTC FOR FREEZE FRAME DATA** • Is DTC P0116 on FREEZE FRAME DATA?	Yes	Go to the next step.
		No	Go to troubleshooting for DTC on FREEZE FRAME DATA. (See 01–02A–18 DTC TABLE [L3].)
4	**INSPECT ECT SENSOR CONNECTOR FOR POOR CONNECTION** • Turn the ignition switch off. • Disconnect ECT sensor connector. • Inspect for poor connection (such as damaged/ pulled-out pins, corrosion). • Is there any malfunction?	Yes	Repair or replace the terminal, then go to Step 8.
		No	Go to the next step.
5	**INSPECT ECT SENSOR** • Inspect the ECT sensor. (See 01–40A–35 ENGINE COOLANT TEMPERATURE (ECT) SENSOR INSPECTION [L3].) • Is there any malfunction?	Yes	Replace the ECT sensor, then go to Step 8.
		No	Go to the next step.
6	**INSPECT PCM CONNECTOR FOR POOR CONNECTION** • Turn the ignition switch off. • Disconnect the PCM connector. • Inspect for poor connection (such as damaged/ pulled-out pins, corrosion.) • Is there any malfunction?	Yes	Repair or replace the terminal, then go to Step 8.
		No	Go to the next step.
7	**COMPARE ECT PID VALUE** • Prepare a new ECT sensor. • Clear the DTC from the PCM memory using the WDS or equivalent. • Connect the ECT sensor connector to the new ECT sensor without installing to the engine. • Turn the ignition switch to the ON position and record the ECT PID value. • Replace the malfunction ECT sensor with new one. • Start the engine and wait for 5 min. • Record the ECT PID value. • Is the difference between ECT PID values more than 6 °C {42 °F}?	Yes	Go to the next step.
		No	Inspect the thermostat. • If the thermostat is normal, go to the next step. • If the thermostat is not normal, then go to the next step.
8	**VERIFY TROUBLESHOOTING OF DTC P0116 COMPLETED** • Make sure to reconnect all disconnected connectors. • Clear DTC from PCM memory using WDS or equivalent. • Start the engine and warm it up to completely. • Is the PENDING CODE for this DTC present?	Yes	Replace PCM, then go to next step. (See 01–40A–9 PCM REMOVAL/INSTALLATION [L3].)
		No	Go to the next step.
9	**VERIFY AFTER REPAIR PROCEDURE** • Perform the "After Repair Procedure". (See 01–02A–12 AFTER REPAIR PROCEDURE [L3].) • Is there any DTC present?	Yes	Go to applicable DTC inspection. (See 01–02A–18 DTC TABLE [L3].)
		No	Troubleshooting completed.

DTC P0117 [L3]

E6U010200100W10

DTC P0117	ECT circuit low input
DETECTION CONDITION	• The PCM monitors ECT sensor signal. If the PCM detected ECT sensor voltage **below 0.18 V*1, 0.20 V*2** the PCM determines that the ECT sensor circuit has malfunction. **Diagnostic support note** • This is a continuous monitor (Engine cooling system). • MIL illuminates if PCM detects the above malfunction condition during first drive cycle. • PENDING CODE is available if PCM detects the above malfunction condition. • FREEZE FRAME DATA is available. • DTC is stored in the PCM memory.
POSSIBLE CAUSE	• ECT sensor malfunction • Connect or terminal malfunction • Short to ground circuit between ECT sensor terminal A and PCM connector terminal 2AH. • Short each harness ECT signal circuit and ECT ground circuit. • PCM malfunction

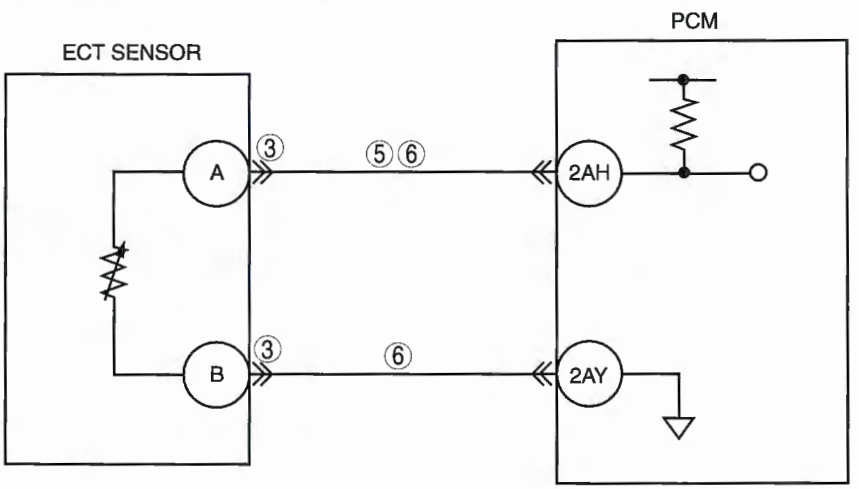

ECT SENSOR
HARNESS SIDE CONNECTOR

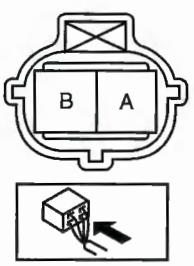

PCM
WIRING HARNESS-SIDE CONNECTOR

2BE	2BA	2AW	2AS	2AO	2AK	2AG	2AC	2Y	2U	2Q	2M	2I	2E	2A
2BF	2BB	2AX	2AT	2AP	2AL	2AH	2AD	2Z	2V	2R	2N	2J	2F	2B
2BG	2BC	2AY	2AU	2AQ	2AM	2AI	2AE	2AA	2W	2S	2O	2K	2G	2C
2BH	2BD	2AZ	2AV	2AR	2AN	2AJ	2AF	2AB	2X	2T	2P	2L	2H	2D

*1 : California emission regulation applicable ATX model
*2 : Except for California emission regulation applicable ATX model

Diagnostic procedure

STEP	INSPECTION		ACTION
1	**VERIFY FREEZE FRAME DATA AND DIAGNOSTIC MONITORING TEST RESULTS HAVE BEEN RECORDED** • Have FREEZE FRAME DATA and DIAGNOSTIC MONITORING TEST RESULTS (Engine cooling system related) been recorded?	Yes	Go to the next step.
		No	Record FREEZE FRAME DATA and DIAGNOSTIC MONITORING TEST RESULTS on repair order, then go to the next step.
2	**VERIFY RELATED REPAIR INFORMATION AVAILABILITY** • Check for related Service Bulletins and/or on-line repair information availability. • Is any related repair information available?	Yes	Perform repair or diagnosis according to the available repair information. • If the vehicle is not repaired, go to the next step.
		No	Go to the next step.
3	**INSPECT TERMINAL BENT** • Turn the ignition switch off. • Disconnect ECT sensor connector. • Inspect for bent of ECT sensor terminals A and B (part-side). • Is there any malfunction?	Yes	Repair or replace the terminal, then go to Step 7.
		No	Go to the next step.
4	**CLASSIFY ECT SENSOR MALFUNCTION OR HARNESS MALFUNCTION** • Connect WDS or equivalent to DLC-2. • Access ECT PID. • Verify ECT value when disconnecting ECT sensor connector. • Does ECT value change?	Yes	Replace ECT sensor, then go to Step 7.
		No	Go to the next step.
5	**INSPECT ECT SIGNAL CIRCUIT FOR SHORT TO GROUND** • Turn the ignition switch off. • Inspect continuity between ECT sensor terminal A (wiring harness-side) and body ground. • Is there continuity?	Yes	Repair or replace harness for short to ground, then go to Step 7.
		No	Go to the next step.
6	**INSPECT IAT CIRCUIT FOR SHORT HARNESSES** • Inspect continuity between ECT sensor terminal A and B (wiring harness-side). • Is there continuity?	Yes	Repair or replace harness for short, then go to the next step.
		No	Go to the next step.
7	**VERIFY TROUBLESHOOTING OF DTC P0117 COMPLETED** • Make sure to reconnect all disconnected connectors. • Turn ignition switch to ON (Engine off). • Clear the DTC from the PCM memory using the WDS or equivalent. • Start engine and warm it up completely. • Is same DTC present?	Yes	Replace PCM, then go to the next step. (See 01–40A–9 PCM REMOVAL/INSTALLATION [L3].)
		No	Go to the next step.
8	**VERIFY AFTER REPAIR PROCEDURE** • Perform the "After Repair Procedure". (See 01–02A–12 AFTER REPAIR PROCEDURE [L3].) • Is any DTC present?	Yes	Go to the applicable DTC inspection. (See 01–02A–18 DTC TABLE [L3].)
		No	Troubleshooting completed.

DTC P0118 [L3]

E6U010200100W11

DTC P0118	ECT circuit high input
DETECTION CONDITION	• The PCM monitors ECT sensor signal. If the PCM detected ECT sensor voltage **above 4.58 V**, the PCM determines that the ECT sensor circuit has malfunction. **Diagnostic support note** • This is a continuous monitor (Engine cooling system). • MIL illuminates if PCM detects the above malfunction condition during first drive cycle. • PENDING CODE is available if PCM detects the above malfunction condition. • FREEZE FRAME DATA is available. • DTC is stored in the PCM memory.
POSSIBLE CAUSE	• ECT sensor malfunction • Open circuit between ECT sensor terminal A and PCM terminal 2AH • Short to power supply between ECT sensor terminal A and PCM terminal 2AH • Open circuit between ECT sensor terminal B and PCM terminal 2AY • Poor connection of ECT sensor or PCM connectors • PCM malfunction

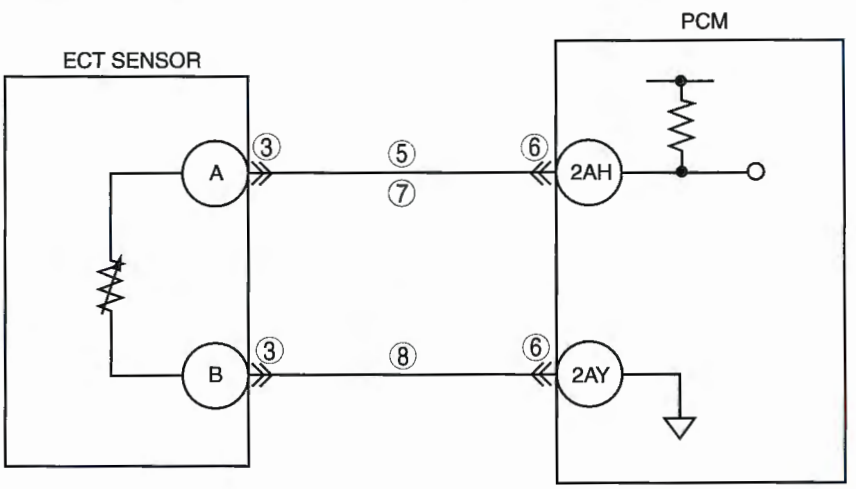

ECT SENSOR
HARNESS SIDE CONNECTOR

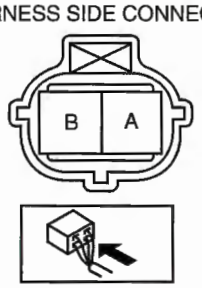

PCM
WIRING HARNESS-SIDE CONNECTOR

2BE	2BA	2AW	2AS	2AO	2AK	2AG	2AC	2Y	2U	2Q	2M	2I	2E	2A
2BF	2BB	2AX	2AT	2AP	2AL	2AH	2AD	2Z	2V	2R	2N	2J	2F	2B
2BG	2BC	2AY	2AU	2AQ	2AM	2AI	2AE	2AA	2W	2S	2O	2K	2G	2C
2BH	2BD	2AZ	2AV	2AR	2AN	2AJ	2AF	2AB	2X	2T	2P	2L	2H	2D

Diagnostic procedure

STEP	INSPECTION		ACTION
1	**VERIFY FREEZE FRAME DATA AND DIAGNOSTIC MONITORING TEST RESULTS HAVE BEEN RECORDED** • Have FREEZE FRAME DATA and DIAGNOSTIC MONITORING TEST RESULTS (Engine cooling system related) been recorded?	Yes	Go to the next step.
		No	Record FREEZE FRAME DATA and DIAGNOSTIC MONITORING TEST RESULTS on repair order, then go to the next step.
2	**VERIFY RELATED REPAIR INFORMATION AVAILABILITY** • Check for related Service Bulletins and/or on-line repair information availability. • Is any related repair information available?	Yes	Perform repair or diagnosis according to the available repair information. • If the vehicle is not repaired, go to the next step.
		No	Go to the next step.
3	**INSPECT ECT SENSOR CONNECTOR FOR POOR CONNECTION** • Turn the ignition switch off. • Disconnect ECT sensor connector. • Inspect for poor connection (such as damaged/ pulled-out pins, corrosion). • Is there any malfunction?	Yes	Repair or replace the terminal, then go to Step 9.
		No	Go to the next step.
4	**CLASSIFY ECT SENSOR MALFUNCTION OR HARNESS MALFUNCTION** • Connect WDS or equivalent to DLC-2. • Access ECT PID. • Connect a jumper wire between ECT sensor terminals A and B (wiring harness-side). • Verify ECT value • Is voltage **below 4.58 V**?	Yes	Replace ECT sensor, then go to Step 9.
		No	Go to the next step.
5	**INSPECT ECT SENSOR SIGNAL CIRCUIT FOR SHORT TO POWER SUPPLY** • Turn ignition switch to ON (Engine off). • Measure voltage between ECT sensor terminal A (wiring harness-side) and body ground. • Is voltage **B+**?	Yes	Repair or replace harness for short to power supply, then go to Step 9.
		No	Go to the next step.
6	**INSPECT PCM CONNECTOR FOR POOR CONNECTION** • Disconnect PCM connector. • Inspect for poor connection (such as damaged/ pulled-out pins, corrosion). • Is there any malfunction?	Yes	Repair or replace the terminal, then go to Step 9.
		No	Go to the next step.
7	**INSPECT ECT SENSOR SIGNAL CIRCUIT FOR OPEN CIRCUIT** • Inspect continuity between ECT sensor terminal A (wiring harness-side) and PCM terminal 2AH (wiring harness-side). • Is there continuity?	Yes	Go to the next step.
		No	Repair or replace harness for open circuit, then go to Step 9.
8	**INSPECT ECT SENSOR GROUND CIRCUIT FOR OPEN CIRCUIT** • Inspect continuity between ECT sensor terminal B (wiring harness-side) and PCM terminal 2AY (wiring harness-side). • Is there continuity?	Yes	Go to the next step.
		No	Repair or replace harness for open circuit, then go to the next step.
9	**VERIFY TROUBLESHOOTING OF DTC P0118 COMPLETED** • Make sure to reconnect all disconnected connectors. • Turn ignition switch to ON (Engine off). • Clear the DTC from the PCM memory using the WDS or equivalent. • Start engine and warm it up completely. • Is same DTC present?	Yes	Replace PCM, then go to the next step. (See 01–40A–9 PCM REMOVAL/INSTALLATION [L3].)
		No	Go to the next step.
0	**VERIFY AFTER REPAIR PROCEDURE** • Perform the "After Repair Procedure". (See 01–02A–12 AFTER REPAIR PROCEDURE [L3].) • Is any DTC present?	Yes	Go to the applicable DTC inspection. (See 01–02A–18 DTC TABLE [L3].)
		No	Troubleshooting completed.

DTC P0122 [L3]

E6U010200100W12

DTC P0122	TP sensor No.1 circuit low input
DETECTION CONDITION	• If PCM detects TP sensor No.1 voltage **below 0.2 V** after ignition switch to ON, PCM determines that TP circuit has a malfunction. **Diagnostic support note** • This is a continuous monitor (CCM). • MIL illuminates if PCM detects the above malfunction condition during first drive cycle. • PENDING CODE is available if PCM detects the above malfunction condition. • FREEZE FRAME DATA is available. • DTC is stored in the PCM memory.
POSSIBLE CAUSE	• TP sensor malfunction • Connector or terminal malfunction • Open circuit between throttle body terminal A and PCM terminal 2AK • Short to ground between throttle body terminal A and PCM terminal 2AK • Open circuit between throttle body terminal B and PCM terminal 2AO • Short to ground between throttle body terminal B and PCM terminal 2AO • PCM malfunction

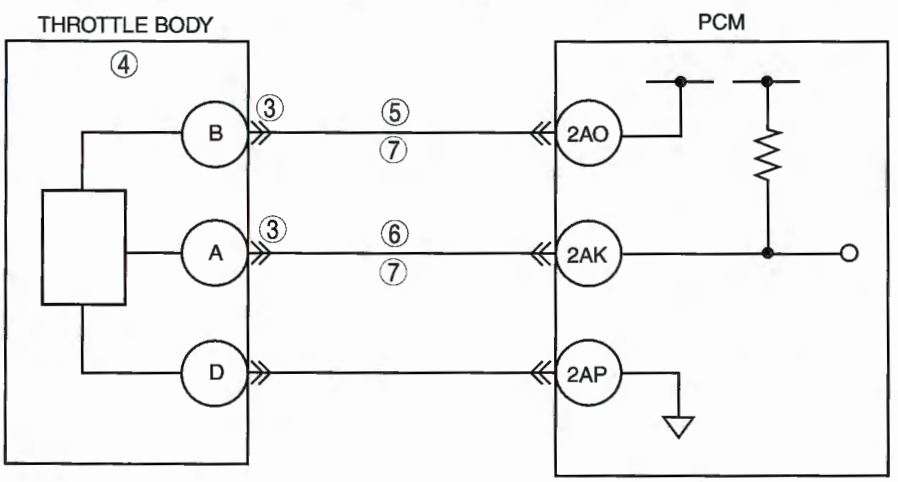

THROTTLE BODY
HARNESS SIDE CONNECTOR

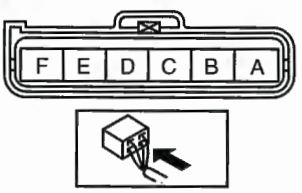

PCM
WIRING HARNESS-SIDE CONNECTOR

2BE	2BA	2AW	2AS	2AO	2AK	2AG	2AC	2Y	2U	2Q	2M	2I	2E	2A
2BF	2BB	2AX	2AT	2AP	2AL	2AH	2AD	2Z	2V	2R	2N	2J	2F	2B
2BG	2BC	2AY	2AU	2AQ	2AM	2AI	2AE	2AA	2W	2S	2O	2K	2G	2C
2BH	2BD	2AZ	2AV	2AR	2AN	2AJ	2AF	2AB	2X	2T	2P	2L	2H	2D

Diagnostic procedure

STEP	INSPECTION		ACTION
1	**VERIFY FREEZE FRAME DATA HAS BEEN RECORDED** • Has FREEZE FRAME DATA been recorded?	Yes	Go to the next step.
		No	Record FREEZE FRAME DATA on repair order, then go to the next step.
2	**VERIFY RELATED REPAIR INFORMATION AVAILABILITY** • Check for related Service Bulletins and/or on-line repair information availability. • Is any related repair information available?	Yes	Perform repair or diagnosis according to the available repair information. • If the vehicle is not repaired, go to the next step.
		No	Go to the next step.
3	**CLASSIFY TP SENSOR OR HARNESS MALFUNCTION** • Connect WDS or equivalent. • Access TP1 PID. • Disconnect throttle body connector. • Connect a jumper wire between throttle body terminals A and B (wiring harness-side). • Is voltage **above 4.9 V**?	Yes	Go to the next step.
		No	Go to step 5.
4	**INSPECT TP SENSOR** • Perform TP sensor inspection. (See 01–40A–30 THROTTLE POSITION (TP) SENSOR INSPECTION [L3].) • Is TP sensor normal?	Yes	Inspect for poor throttle body connector terminal B connection. Repair or replace if necessary, then go to Step 8.
		No	Replace throttle body, then go to Step 8.
5	**INSPECT POWER SUPPLY CIRCUIT VOLTAGE AT THROTTLE BODY CONNECTOR** **Note** • If DTC P0107 and P2228 are also retrieved with P0122, go to CONSTANT VOLTAGE troubleshooting procedure. • Turn ignition switch to ON (Engine off). • Measure voltage at throttle body terminal B (wiring harness-side). • Is voltage **within 4.5—5.5 V**?	Yes	Go to the next step.
		No	Repair or replace open circuit between throttle body connector terminal B (wiring harness-side) and PCM connector terminal 2AO (wiring harness-side). Then, then go to Step 8.
6	**VERIFY TP1 SIGNAL CIRCUIT FOR OPEN CIRCUIT** • Turn the ignition switch off. • Inspect continuity between throttle body terminal A (wiring harness-side) and PCM terminal 2AK (wiring harness-side). • Is there continuity?	Yes	Go to the next step.
		No	Repair or replace suspected harness, then go to Step 8.
7	**VERIFY TP1 SIGNAL CIRCUIT FOR SHORT TO GROUND** • Inspect continuity between throttle body terminal A (wiring harness-side) and body ground. • Inspect continuity between throttle body terminal B (wiring harness-side) and body ground. • Is there continuity?	Yes	Repair or replace suspected harness, then go to the next step.
		No	Go to the next step.
8	**VERIFY TROUBLESHOOTING OF DTC P0122 COMPLETED** • Make sure to reconnect all disconnected connectors. • Turn ignition switch to ON (Engine off). • Clear the DTC from the PCM memory using the WDS or equivalent. • Start engine and warm it up completely. • Is same DTC present?	Yes	Replace PCM, then go to the next step. (See 01–40A–9 PCM REMOVAL/INSTALLATION [L3].)
		No	Go to the next step.
9	**VERIFY AFTER REPAIR PROCEDURE** • Perform the "After Repair Procedure". (See 01–02A–12 AFTER REPAIR PROCEDURE [L3].) • Is any DTC present?	Yes	Go to the applicable DTC inspection. (See 01–02A–18 DTC TABLE [L3].)
		No	Troubleshooting completed.

DTC P0123 [L3]

E6U010200100W13

DTC P0123	TP sensor No.1 circuit high input
DETECTION CONDITION	• If PCM detects TP sensor No.1 voltage is **above 4.9 V*1, 4.85 V*2** after ignition switch to ON, PCM determines that TP circuit has a malfunction. **Diagnostic support note** • This is a continuous monitor (CCM). • MIL illuminates if PCM detects the above malfunction condition during first drive cycle. • PENDING CODE is available if PCM detects the above malfunction condition. • FREEZE FRAME DATA is available. • DTC is stored in the PCM memory.
POSSIBLE CAUSE	• TP sensor malfunction • Connector or terminal malfunction • Open circuit between throttle body terminal B and PCM terminal 2AO • Open circuit between throttle body terminal D and PCM terminal 2AP • Short to constant voltage supply circuit between throttle body terminal A and PCM terminal 2AK • PCM malfunction

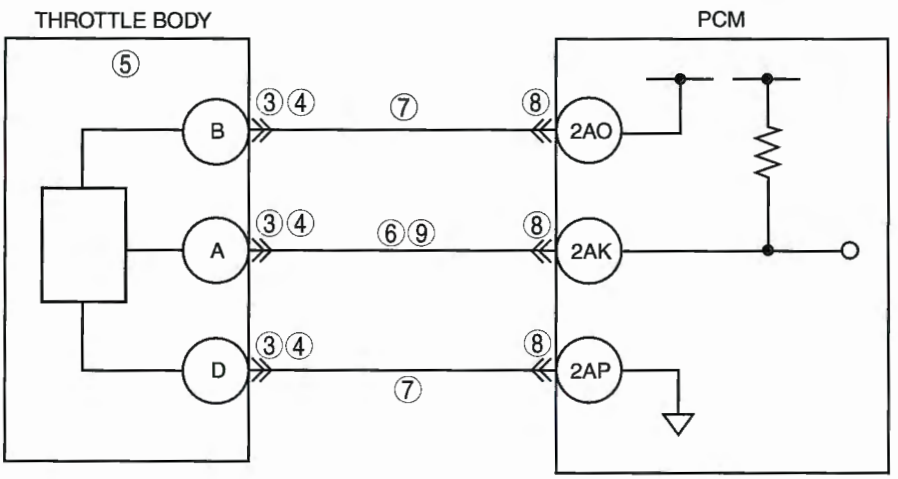

THROTTLE BODY
HARNESS SIDE CONNECTOR

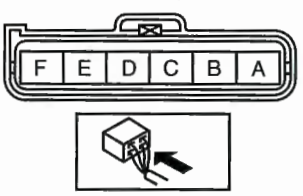

PCM
WIRING HARNESS-SIDE CONNECTOR

2BE	2BA	2AW	2AS	2AO	2AK	2AG	2AC	2Y	2U	2Q	2M	2I	2E	2A
2BF	2BB	2AX	2AT	2AP	2AL	2AH	2AD	2Z	2V	2R	2N	2J	2F	2B

2BG	2BC	2AY	2AU	2AQ	2AM	2AI	2AE	2AA	2W	2S	2O	2K	2G	2C
2BH	2BD	2AZ	2AV	2AR	2AN	2AJ	2AF	2AB	2X	2T	2P	2L	2H	2D

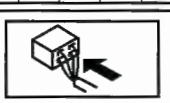

*1 : California emission regulation applicable ATX model
*2 : Except for California emission regulation applicable ATX model

Diagnostic procedure

STEP	INSPECTION		ACTION
1	**VERIFY FREEZE FRAME DATA HAS BEEN RECORDED** • Has FREEZE FRAME DATA been recorded?	Yes	Go to the next step.
		No	Record FREEZE FRAME DATA on repair order, then go to the next step.
2	**VERIFY RELATED REPAIR INFORMATION AVAILABILITY** • Check for related Service Bulletins and/or on-line repair information availability. • Is any related repair information available?	Yes	Perform repair or diagnosis according to the available repair information. • If the vehicle is not repaired, go to the next step.
		No	Go to the next step.
3	**INSPECT THROTTLE BODY CONNECTOR** • Turn the ignition switch off. • Verify that the throttle body connector is connected securely. • Is connector normal?	Yes	Go to the next step.
		No	Connect the connector securely, then go to Step 10.
4	**INSPECT THROTTLE BODY CONNECTION FOR POOR CONNECTION** • Disconnect throttle body connector. • Inspect for poor connection (such as damaged/ pulled-out pins, corrosion). • Is there any malfunction?	Yes	Repair or replace suspected terminal, then go to Step 10.
		No	Go to the next step.
5	**INSPECT TP SENSOR** • Perform TP sensor inspection. (See 01–40A–30 THROTTLE POSITION (TP) SENSOR INSPECTION [L3]) • Is TP sensor normal?	Yes	Go to the next step.
		No	Replace throttle body, then go to Step 10.
6	**INSPECT TP1 SIGNAL CIRCUIT FOR SHORT TO POWER SUPPLY** • Turn ignition switch to ON (Engine off). • Measure voltage between throttle body terminal A (wiring harness-side) and body ground. • Is voltage **above 4.9 V**?	Yes	Repair or replace short to power supply. Then, go to Step 10.
		No	Go to the next step.
7	**VERIFY TP SENSOR GROUND CIRCUIT FOR OPEN CIRCUIT** • Inspect continuity between throttle body connector terminal B (wiring harness-side) and PCM connector terminal 2AO • Inspect continuity between throttle body connector terminal D (wiring harness-side) and PCM connector terminal 2AP • Is there continuity?	Yes	Go to the next step.
		No	Repair or replace open circuit between TP sensor connector terminal B (wiring harness-side) and PCM connector terminal 2AO (wiring harness-side). Then, go to Step 10.
8	**INSPECT PCM CONNECTOR FOR POOR CONNECTION** • Disconnect PCM connector. • Inspect for poor connection (such as damaged/ pulled-out pins, corrosion). • Is there any malfunction?	Yes	Repair terminal, then go to Step 10.
		No	Go to Step 10.
9	**VERIFY TP SIGNAL CIRCUIT FOR SHORT TO CONSTANT VOLTAGE CIRCUIT** • Inspect continuity between throttle body terminals A and B (wiring harness-side). • Is there continuity?	Yes	Repair or replace suspected harness, then go to the next step.
		No	Go to the next step.
10	**VERIFY TROUBLESHOOTING OF DTC P0123 COMPLETED** • Make sure to reconnect all disconnected connectors. • Turn ignition switch to ON (Engine off). • Clear the DTC from the PCM memory using the WDS or equivalent. • Start engine and warm it up completely. • Is same DTC present?	Yes	Replace PCM, then go to the next step. (See 01–40A–9 PCM REMOVAL/INSTALLATION [L3].)
		No	Go to the next step.
1	**VERIFY AFTER REPAIR PROCEDURE** • Perform the "After Repair Procedure". (See 01–02A–12 AFTER REPAIR PROCEDURE [L3].) • Is any DTC present?	Yes	Go to the applicable DTC inspection. (See 01–02A–18 DTC TABLE [L3].)
		No	Troubleshooting completed.

DTC P0125 [L3]

E6U010200100W14

DTC P0125	Excessive time to enter closed loop fuel control
DETECTION CONDITION	• The PCM monitor ECT sensor signal at PCM terminal 2AH after engine is started at the engine is cold. If engine coolant temperature does not reach the expected temperature for specified period, PCM determines that it has taken an excessive amount of time for the engine coolant temperature to reach the temperature necessary to start closed-loop fuel control. **Diagnostic support note** • This is a continuous monitor (Engine cooling system). • MIL illuminates if PCM detects above malfunction condition in two consecutive drive cycles or in one drive cycle while DTC for the same malfunction has been stored in PCM. • PENDING CODE is available if PCM detects the above malfunction condition during first drive cycle. • FREEZE FRAME DATA is available. • DTC is stored in PCM memory.
POSSIBLE CAUSE	• ECT sensor malfunction • Poor connection of connectors • Engine cooling system malfunction • PCM malfunction

Diagnostic procedure

STEP	INSPECTION		ACTION
1	**VERIFY FREEZE FRAME DATA AND DIAGNOSTIC MONITORING TEST RESULTS HAVE BEEN RECORDED** • Have FREEZE FRAME DATA and DIAGNOSTIC MONITORING TEST RESULTS (Engine cooling system related) been recorded?	Yes	Go to the next step.
		No	Record FREEZE FRAME DATA and DIAGNOSTIC MONITORING TEST RESULTS on repair order, then go to the next step.
2	**VERIFY RELATED REPAIR INFORMATION AVAILABILITY** • Check for related Service Bulletins and/or on-line repair information availability. • Is any related repair information available?	Yes	Perform repair or diagnosis according to the available repair information. • If the vehicle is not repaired, go to the next step.
		No	Go to the next step.
3	**VERIFY CURRENT INPUT SIGNAL STATUS IS CONCERN INTERMITTENT OR CONSTANT** • Start engine. • Warm up engine completely. • Access ECT PID using the WDS or equivalent. • Is ECT PID **above 60 °C {140 °F}**?	Yes	Intermittent concern exists. Go to INTERMITTENT CONCERNS TROUBLESHOOTING procedure. (See 01–03A–7 INTERMITTENT CONCERN TROUBLESHOOTING [L3].)
		No	Go to the next step.
4	**INSPECT ECT SENSOR CONNECTOR FOR POOR CONNECTION** • Turn the ignition switch off. • Disconnect ECT sensor connector. • Inspect for poor connection (such as damaged/ pulled-out pins, corrosion). • Is there any malfunction?	Yes	Repair or replace the terminal, then go to Step 8.
		No	Go to the next step.
5	**INSPECT ECT SENSOR** • Inspect ECT sensor. (See 01–40A–35 ENGINE COOLANT TEMPERATURE (ECT) SENSOR INSPECTION [L3].) • Is it normal?	Yes	Go to the next step.
		No	Replace ECT sensor, then go to Step 8.
6	**INSPECT ENGINE COOLANT SYSTEM** • Inspect the following items. — Cooling system cap — Radiator — Thermostat — Water pump — Cooling fan • Are they normal?	Yes	Go to the next step.
		No	Repair or replace necessary part, then go to Step 8.
7	**INSPECT PCM CONNECTOR FOR POOR CONNECTION** • Disconnect PCM connector. • Inspect for poor connection (such as damaged/ pulled-out pins, corrosion). • Is there any malfunction?	Yes	Repair or replace the terminal, then go to the next step.
		No	Go to the next step.
8	**VERIFY TROUBLESHOOTING OF DTC P0125 COMPLETED** • Make sure to reconnect all disconnected connectors. • Clear the DTC from the PCM memory using the WDS or equivalent. • Turn ignition switch to ON (Engine off). • Access ECT PID using the WDS or equivalent. • Wait until ECT PID **below 8 °C {46 °F}**[*1]**, 19.4 °C {66.9 °F}**[*2]. • Start engine and warm it up completely. • Is PENDING CODE for this DTC present?	Yes	Replace PCM, then go to the next step. (See 01–40A–9 PCM REMOVAL/INSTALLATION [L3].)
		No	Go to the next step.
9	**VERIFY AFTER REPAIR PROCEDURE** • Perform the "After Repair Procedure". (See 01–02A–12 AFTER REPAIR PROCEDURE [L3].) • Is any DTC present?	Yes	Go to the applicable DTC inspection. (See 01–02A–18 DTC TABLE [L3].)
		No	Troubleshooting completed.

*1 : California emission regulation applicable model
*2 : Except for California emission regulation applicable model

DTC P0126, P0128 [L3]

E6U010200100W15

DTC P0126 DTC P0128	**Coolant thermostat stuck open**
DETECTION CONDITION	**DTC P0126** • If the ECT signal never exceeds **71 °C {160 °F}** after engine start for specified period, PCM determines that the coolant thermostat is stuck open. **MONITORING CONDITIONS** — IAT: **above –10 °C {14 °F}** — Vehicle speed: **over 9.4 km/h {5.8 mph} [ATX], over 6.3 km/h {3.9mph} [MTX]** **DTC P0128** • PCM monitors MAF, IAT, VSS and EAT signals and calculate radiator heat radiation ratio while following monitoring conditions are met. If calculated value exceeds threshold, PCM determines that the coolant thermostat is stuck open. **MONITORING CONDITIONS** — ECT at engine start: **Below 36 °C {97 °F}** — IAT: **above –10 °C {14 °F}** — Difference between ECT at engine start and minimum IAT: **Below 6 °C {10.8 °F}** — Vehicle speed: **over 32 km/h {20 mph}** **Diagnostic support note** • This is an intermittent monitor (Engine cooling system). • MIL illuminates if PCM detects above malfunction condition in two consecutive drive cycles or in one drive cycle while DTC for the same malfunction has been stored in PCM. • PENDING CODE is available if PCM detects the above malfunction condition during first drive cycle. • FREEZE FRAME DATA is available. • DTC is stored in PCM memory. • DIAGNOSTIC MONITORING TEST RESULTS is available.
POSSIBLE CAUSE	• ECT sensor malfunction • Coolant thermostat malfunction • PCM malfunction

Diagnostic procedure

STEP	INSPECTION		ACTION
1	**VERIFY FREEZE FRAME DATA AND DIAGNOSTIC MONITORING TEST RESULTS HAVE BEEN RECORDED** • Have FREEZE FRAME DATA and DIAGNOSTIC MONITORING TEST RESULTS (Engine cooling system related) been recorded?	Yes	Go to the next step.
		No	Record FREEZE FRAME DATA and DIAGNOSTIC MONITORING TEST RESULTS on repair order, then go to the next step.
2	**VERIFY RELATED REPAIR INFORMATION AVAILABILITY** • Check for related Service Bulletins and/or on-line repair information availability. • Is any related repair information available?	Yes	Perform repair or diagnosis according to the available repair information. • If the vehicle is not repaired, go to the next step.
		No	Go to the next step.
3	**INSPECT FOR OTHER DTCS** • Have other DTCs been stored?	Yes	Repair circuit malfunction for applicable DTCs.
		No	Go to the next step.
4	**INSPECT COOLANT THERMOSTAT FOR WHETHER STUCK OPEN** • Perform coolant thermostat inspection. (See 01–12A–10 THERMOSTAT INSPECTION [L3, AJ].) • Is coolant thermostat normal?	Yes	Inspect ECT sensor. Replace ECT sensor if necessary, then go to the next step.
		No	Replace coolant thermostat, then go to the next step.

STEP	INSPECTION		ACTION
5	**VERIFY MONITORING CONDITION FOR REPAIR VERIFICATION** • Make sure to reconnect all disconnected connectors. • Cool down engine. **Note** • If workshop inside and outside temperature difference is significant, PCM might not operate thermostat monitor. Therefore, it is recommended to cool down engine out of workshop. • Turn ignition switch to ON (Engine off). • Clear the DTC from the PCM memory using the WDS or equivalent. • Access ECT, IAT PIDs and make sure that each value is within following specifications. — ECT: **below 36 °C {97 °F}** (for P0128 only) — IAT: **Above –10°C {14°F}** — Difference between ECT and IAT: **Below 6°C {43°F}** • Is there any PID that is out of specification?	Yes	Take corrective action (e.g. cool down engine), then repeat this step.
		No	Go to the next step for DTC P0126 or go to step 7 for DTC P0128.
6	**VERIFY TROUBLESHOOTING OF DTC P0126 COMPLETED** • Start engine and turn off E/L and A/C. • Access DIAGNOSTIC MONITORING TEST RESULTS using the WDS or equivalent and monitor TEST #10: E1: 81 (ECT). **Note** • This test requires actual driving. Chassis roller cannot be used for this test. • During test drive, constant speed should be maintained, although 2 or 3 stops during every **5 minutes** of driving time (e.g. for traffic signals) is acceptable. Stop-and-go (e.g. in case of traffic congestion) is not acceptable during the test period. • Test period depends on ECT at engine start. (e.g. if ECT is **–10°C {14°F}**, monitoring period is **38 minutes** and ECT is **30 °C {86 °F}**, monitoring period is **8 minutes**) • Verify TEST #10: E1: 81 (ECT) value. • Is value above minimum value?	Yes	Go to Step 8.
		No	Replace PCM, then go to Step 8.

STEP	INSPECTION		ACTION
7	**VERIFY TROUBLESHOOTING OF DTC P0128 COMPLETED** • Start engine and turn off E/L and A/C. • Access DIAGNOSTIC MONITORING TEST RESULTS using the WDS or equivalent and monitor TEST #10: E1: 80 (Heat radiation ratio) or #10: E1: 81 (ECT). **Note** • This test requires actual driving. Chassis roller cannot be used for this test. • During test drive, constant speed should be maintained, although 2 or 3 stops (e.g. for traffic signals) is acceptable. Stop-and-go (e.g. in case of traffic congestion) is not acceptable during the test period. • Verify TEST #10: E1: 80 (Heat radiation ratio) and #10: El: 81 (ECT) value. • Are value of TEST #10: E1: 80 (Heat radiation ratio) below maximum value and value of TEST #10: E1: 81 (ECT) above minimum value?	Yes	Go to the next step.
		No	Replace PCM, then go to the next step.
8	**VERIFY AFTER REPAIR PROCEDURE** • Perform the "After Repair Procedure". (See 01–02A–12 AFTER REPAIR PROCEDURE [L3].) • Is any DTC present?	Yes	Go to the applicable DTC inspection. (See 01–02A–18 DTC TABLE [L3].)
		No	Troubleshooting completed.

DTC P0130 [L3]

E6U010200100W16

DTC P0130	Front HO2S circuit problem
DETECTION CONDITION	• The PCM monitors the front HO2S impedance when under the front HO2S heater control. If the impedance is **more than 500 ohms**, the PCM determines that there is a front HO2S circuit problem. **Diagnostic support note** • This is an intermittent monitor (HO2S). • MIL illuminates if PCM detects above malfunction condition in two consecutive drive cycles or in one drive cycle while DTC for the same malfunction has been stored in PCM. • PENDING CODE is available if PCM detects the above malfunction condition during first drive cycle. • FREEZE FRAME DATA is available. • The DTC is stored in the PCM memory.
POSSIBLE CAUSE	• Front HO2S malfunction • Connector or terminal malfunction • PCM malfunction

Diagnostic procedure

STEP	INSPECTION		ACTION
1	**VERIFY FREEZE FRAME DATA AND DIAGNOSTIC MONITORING TEST RESULTS HAVE BEEN RECORDED** • Have FREEZE FRAME DATA and DIAGNOSTIC MONITORING TEST RESULTS (HO2S related) been recorded?	Yes	Go to the next step.
		No	Record the FREEZE FRAME DATA and DIAGNOSTIC MONITORING TEST RESULTS on the repair order, then go to the next step.
2	**VERIFY RELATED REPAIR INFORMATION AVAILABILITY** • Verify related Service Bulletins and/or on-line repair information availability. • Is any related repair information available?	Yes	Perform repair or diagnosis according to the available repair information. • If the vehicle is not repaired, go to the next step.
		No	Go to the next step.
3	**INSPECT FRONT HO2S CONNECTOR FOR POOR CONNECTION** • Turn the ignition switch off. • Disconnect the front HO2S connector. • Inspect for poor connection (such as damaged/ pulled-out pins, corrosion). • Is there any malfunction?	Yes	Repair or replace the terminal, then go to Step 6.
		No	Go to the next step.
4	**INSPECT FRONT HO2S** • Inspect the front HO2S. (See 01–40A–37 HEATED OXYGEN SENSOR (HO2S) INSPECTION [L3].) • Is there any malfunction?	Yes	Replace the front HO2S, then go to Step 6. (See 01–15A–2 EXHAUST SYSTEM REMOVAL/ INSTALLATION [L3].)
		No	Go to the next step.
5	**INSPECT PCM CONNECTOR FOR POOR CONNECTION** • Turn the ignition switch off. • Disconnect the PCM connector. • Inspect for poor connection (such as damaged/ pulled-out pins, corrosion). • Is there any malfunction?	Yes	Repair or replace the terminal, then go to the next step.
		No	Go to the next step.
6	**VERIFY TROUBLESHOOTING OF DTC P0130 COMPLETED** • Make sure to reconnect all disconnected connectors. • Clear the DTC from the PCM memory using the WDS or equivalent. • Perform the HO2S heater, HO2S, and TWC Repair Verification Drive Mode. (See 01–02A–13 OBD-II DRIVE MODE [L3].) • Is the PENDING CODE for this DTC present?	Yes	Replace the PCM, then go to the next step. (See 01–40A–9 PCM REMOVAL/INSTALLATION [L3].)
		No	Go to the next step.
7	**VERIFY AFTER REPAIR PROCEDURE** • Perform the "AFTER REPAIR PROCEDURE". (See 01–02A–12 AFTER REPAIR PROCEDURE [L3].) • Are any DTCs present?	Yes	Go to the applicable DTC inspection. (See 01–02A–18 DTC TABLE [L3].)
		No	DTC troubleshooting completed.

DTC P0131 [L3]

E6U010200100W27

California Emission Regulation Applicable ATX Model

DTC P0131	Front HO2S circuit low input
DETECTION CONDITION	• The PCM monitors the input voltage from the front HO2S and the front HO2S output current when the engine is running. If the input voltage is **less than 1.8 V** or the output current is **less than –5 mA**, the PCM determines that the front HO2S circuit voltage is low. **Diagnostic support note** • This is a continuous monitor (HO2S). • The MIL illuminates if the PCM detects the above malfunction condition in two consecutive drive cycles or in one drive cycle while the DTC for the same malfunction has been stored in the PCM. • PENDING CODE is available if the PCM detects the above malfunction condition during the first drive cycle. • FREEZE FRAME DATA is available. • The DTC is stored in the PCM memory.
POSSIBLE CAUSE	• Front HO2S malfunction • Connector or terminal malfunction • Open circuit in wiring harness between front HO2S terminal A and PCM terminal 2AD • Short to ground in wiring harness between front HO2S terminal A and PCM terminal 2AD • Open circuit in wiring harness between front HO2S terminal B and PCM terminal 2Z • Short to ground in wiring harness between front HO2S terminal B and PCM terminal 2Z • PCM malfunction

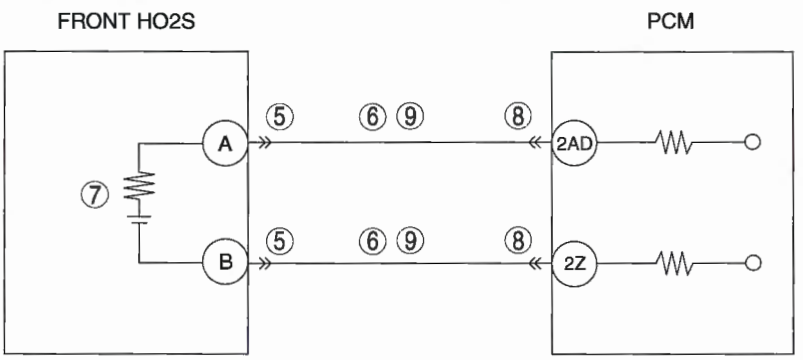

FRONT HO2S
WIRING HARNESS-SIDE CONNECTOR

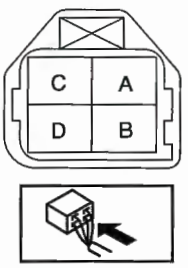

PCM
WIRING HARNESS-SIDE CONNECTOR

2BE	2BA	2AW	2AS	2AO	2AK	2AG	2AC	2Y	2U	2Q	2M	2I	2E	2A
2BF	2BB	2AX	2AT	2AP	2AL	2AH	2AD	2Z	2V	2R	2N	2J	2F	2B

2BG	2BC	2AY	2AU	2AQ	2AM	2AI	2AE	2AA	2W	2S	2O	2K	2G	2C
2BH	2BD	2AZ	2AV	2AR	2AN	2AJ	2AF	2AB	2X	2T	2P	2L	2H	2D

Diagnostic procedure

STEP	INSPECTION		ACTION
1	**VERIFY FREEZE FRAME DATA AND DIAGNOSTIC MONITORING TEST RESULTS HAVE BEEN RECORDED** • Have FREEZE FRAME DATA and DIAGNOSTIC MONITORING TEST RESULTS (HO2S related) been recorded?	Yes	Go to the next step.
		No	Record the FREEZE FRAME DATA and DIAGNOSTIC MONITORING TEST RESULTS on the repair order, then go to the next step.
2	**VERIFY RELATED REPAIR INFORMATION AVAILABILITY** • Verify related Service Bulletins and/or on-line repair information availability. • Is any related repair information available?	Yes	Perform repair or diagnosis according to the available repair information. • If the vehicle is not repaired, go to the next step.
		No	Go to the next step.

STEP	INSPECTION		ACTION
3	**VERIFY RELATED PENDING OR STORED DTC** • Turn the ignition switch off, then to the ON position (Engine off). • Verify the pending code or stored DTCs using the WDS or equivalent. • Is other DTC present?	Yes	Go to the appropriate DTC troubleshooting procedures. (See 01–02A–18 DTC TABLE [L3].)
		No	Go to the next step.
4	**IDENTIFY TRIGGER DTC FOR FREEZE FRAME DATA** • Is DTC P0131 on FREEZE FRAME DATA?	Yes	Go to the next step.
		No	Go to troubleshooting procedures for DTC on FREEZE FRAME DATA. (See 01–02A–18 DTC TABLE [L3].)
5	**INSPECT FRONT HO2S CONNECTOR FOR POOR CONNECTION** • Turn the ignition switch off. • Disconnect the front HO2S connector. • Inspect for poor connection (such as damaged/ pulled-out pins, corrosion). • Is there any malfunction?	Yes	Repair or replace the terminal, then go to Step 10.
		No	Go to the next step.
6	**INSPECT FRONT HO2S CIRCUIT FOR SHORT TO GROUND** • Turn the ignition switch off. • Inspect for continuity between the following terminals and body ground: — Front HO2S terminal A (wiring harness-side) and body ground — Front HO2S terminal B (wiring harness-side) and body ground • Is there continuity?	Yes	Repair or replace the wiring harness for a possible short to ground, then go to Step 10.
		No	Go to the next step.
7	**INSPECT FRONT HO2S** • Inspect the front HO2S. (See 01–40A–37 HEATED OXYGEN SENSOR (HO2S) INSPECTION [L3].) • Is there any malfunction?	Yes	Replace the front HO2S, then go to Step 10. (See 01–15A–5 HO2S Removal Note.)
		No	Go to the next step.
8	**INSPECT PCM CONNECTOR FOR POOR CONNECTION** • Turn the ignition switch off. • Disconnect the PCM connector. • Inspect for poor connection (such as damaged/ pulled-out pins, corrosion). • Is there any malfunction?	Yes	Repair or replace the terminal, then go to Step 10.
		No	Go to the next step.
9	**INSPECT FRONT HO2S CIRCUIT FOR OPEN CIRCUIT** • Turn the ignition switch off. • Inspect for continuity between the following circuits: — Front HO2S terminal A (wiring harness-side) and PCM terminal 2AD (wiring harness-side) — Front HO2S terminal B (wiring harness-side) and PCM terminal 2Z (wiring harness-side) • Is there continuity?	Yes	Go to the next step.
		No	Repair or replace the wiring harness for a possible open circuit, then go to the next step.
10	**VERIFY TROUBLESHOOTING OF DTC P0131 COMPLETED** • Make sure to reconnect all disconnected connectors. • Clear the DTC from the PCM memory using the WDS or equivalent. • Perform the KOEO self-test (using WDS or equivalent) or the HO2S heater, HO2S, and TWC Repair Verification Drive Mode (not using WDS or equivalent). (See 01–02A–12 KOEO/KOER SELF TEST [L3].) (See 01–02A–13 OBD-II DRIVE MODE [L3].) • Is the PENDING CODE for this DTC present?	Yes	Replace the PCM, then go to the next step. (See 01–40A–9 PCM REMOVAL/INSTALLATION [L3].)
		No	Go to the next step.
11	**VERIFY AFTER REPAIR PROCEDURE** • Perform the "AFTER REPAIR PROCEDURE". (See 01–02A–12 AFTER REPAIR PROCEDURE [L3].) • Are any DTCs present?	Yes	Go to the applicable DTC inspection. (See 01–02A–18 DTC TABLE [L3].)
		No	DTC troubleshooting completed.

Except for California Emission Regulation Applicable ATX Model

DTC P0131	Front HO2S circuit low input
DETECTION CONDITION	• The PCM monitors the input voltage from the front HO2S while the engine is running. If the input voltage is **above 1.0 V** for **2 s**, the PCM determines that the front HO2S circuit voltage is low. **Diagnostic support note** • This is a continuous monitor (HO2S). • The MIL illuminates if the PCM detects the above malfunction condition in two consecutive drive cycles or in one drive cycle while the DTC for the same malfunction has been stored in the PCM. • PENDING CODE is available if the PCM detects the above malfunction condition during the first drive cycle. • FREEZE FRAME DATA is available. • Are any DTCs is stored in the PCM memory.
POSSIBLE CAUSE	• Front HO2S malfunction • Connector or terminal malfunction • Open circuit in wiring harness between front HO2S terminal 1C and PCM terminal 2Z • Short to ground in wiring harness between front HO2S terminal 1C and PCM terminal 2Z • Open circuit in wiring harness between front HO2S terminal 1B and PCM terminal 2AC • Short to ground in wiring harness between front HO2S terminal 1B and PCM terminal 2AC • Open circuit in wiring harness between front HO2S terminal 1A and PCM terminal 2AD • Short to ground in wiring harness between front HO2S terminal 1A and PCM terminal 2AD • PCM malfunction

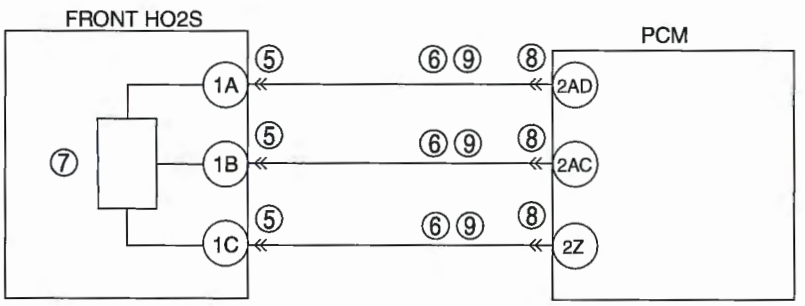

FRONT HO2S
WIRING HARNESS-SIDE CONNECTOR

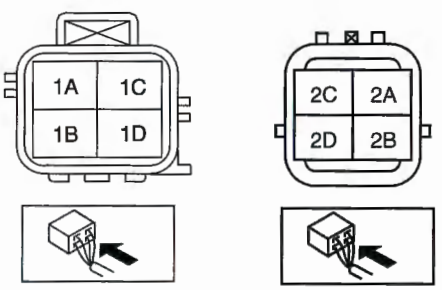

PCM
WIRING HARNESS-SIDE CONNECTOR

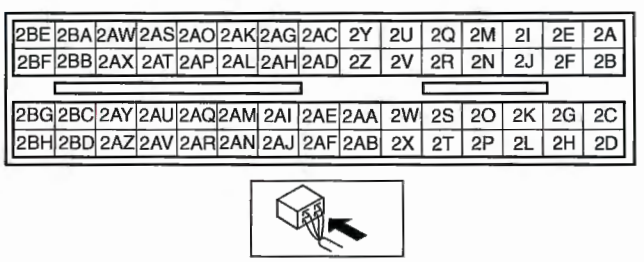

Diagnostic procedure

STEP	INSPECTION		ACTION
1	**VERIFY FREEZE FRAME DATA AND DIAGNOSTIC MONITORING TEST RESULTS HAVE BEEN RECORDED** • Have FREEZE FRAME DATA and DIAGNOSTIC MONITORING TEST RESULTS (HO2S related) been recorded?	Yes	Go to the next step.
		No	Record the FREEZE FRAME DATA and DIAGNOSTIC MONITORING TEST RESULTS on the repair order, then go to the next step.
2	**VERIFY RELATED REPAIR INFORMATION AVAILABILITY** • Verify related Service Information availability. • Is any related Service Information available?	Yes	Perform repair or diagnosis according to the available Service information. If the vehicle is not repaired, go to the next step.
		No	Go to the next step.
3	**VERIFY RELATED PENDING OR STORED DTC** • Turn the ignition switch off, then to the ON position (Engine off). • Verify the pending code or stored DTCs using the WDS or equivalent. • Are other DTCs present?	Yes	Go to the appropriate DTC troubleshooting procedures. (See 01–02A–18 DTC TABLE [L3].)
		No	Go to the next step.

STEP	INSPECTION		ACTION
4	**IDENTIFY TRIGGER DTC FOR FREEZE FRAME DATA** • Is the DTC P0131 on FREEZE FRAME DATA?	Yes	Go to the next step.
		No	Go to troubleshooting procedures for DTC on FREEZE FRAME DATA. (See 01–02A–18 DTC TABLE [L3].)
5	**INSPECT FRONT HO2S CONNECTOR FOR POOR CONNECTION** • Turn the ignition switch off. • Disconnect the front HO2S connector. • Inspect for poor connection (such as damaged/ pulled-out pins, corrosion). • Is there any malfunction?	Yes	Repair or replace the terminal, then go to Step 10.
		No	Go to the next step.
6	**INSPECT FRONT HO2S CIRCUIT FOR SHORT TO GROUND** • Turn the ignition switch off. • Inspect for continuity between the following terminals and body ground: — Front HO2S terminal 1A (wiring harness-side) and body ground — Front HO2S terminal 1B (wiring harness-side) and body ground — Front HO2S terminal 1C (wiring harness-side) and body ground • Is there continuity?	Yes	Repair or replace the wiring harness for a possible short to ground, then go to Step 10.
		No	Go to the next step.
7	**INSPECT FRONT HO2S** • Inspect the front HO2S. (See 01–40A–37 HEATED OXYGEN SENSOR (HO2S) INSPECTION [L3].) • Is there any malfunction?	Yes	Replace the front HO2S, then go to Step 10. (See 01–15A–2 EXHAUST SYSTEM REMOVAL/ INSTALLATION [L3].) (See 01–15A–2 EXHAUST SYSTEM REMOVAL/ INSTALLATION [L3].)
		No	Go to the next step.
8	**INSPECT PCM CONNECTOR FOR POOR CONNECTION** • Turn the ignition switch off. • Disconnect the PCM connector. • Inspect for poor connection (such as damaged/ pulled-out pins, corrosion). • Is there any malfunction?	Yes	Repair or replace the terminal, then go to Step 10.
		No	Go to the next step.
9	**INSPECT FRONT HO2S CIRCUIT FOR OPEN CIRCUIT** • Turn the ignition switch off. • Inspect for continuity between the following circuits: — Front HO2S terminal 1A (wiring harness-side) and PCM terminal 2AD (wiring harness-side) — Front HO2S terminal 1B (wiring harness-side) and PCM terminal 2AC (wiring harness-side) — Front HO2S terminal 1C (wiring harness-side) and PCM terminal 2Z (wiring harness-side) • Is there continuity?	Yes	Go to the next step.
		No	Repair or replace the wiring harness for a possible open circuit, then go to the next step.
10	**VERIFY TROUBLESHOOTING OF DTC P0131 COMPLETED** • Make sure to reconnect all disconnected connectors. • Clear the DTC from the PCM memory using the WDS or equivalent. • Perform the KOEO or KOER self-test. (See 01–02A–12 KOEO/KOER SELF TEST [L3].) • Is the PENDING CODE for this DTC present?	Yes	Replace the PCM, then go to the next step. (See 01–40A–9 PCM REMOVAL/INSTALLATION [L3].)
		No	Go to the next step.
1	**VERIFY AFTER REPAIR PROCEDURE** • Perform the "AFTER REPAIR PROCEDURE". (See 01–02A–12 AFTER REPAIR PROCEDURE [L3].) • Are any DTCs present?	Yes	Go to the applicable DTC inspection. (See 01–02A–18 DTC TABLE [L3].)
		No	DTC troubleshooting completed.

DTC P0132 [L3]

E6U010200100W28

California Emission Regulation Applicable ATX Model

DTC P0132	Front HO2S circuit high input
DETECTION CONDITION	• The PCM monitors the input voltage from the front HO2S and the front HO2S output current when the engine is running. If the input voltage is **more than 3.8 V** or the output current is **more than 5 mA**, the PCM determines that the front HO2S circuit voltage is high. **Diagnostic support note** • This is a continuous monitor (HO2S). • The MIL illuminates if the PCM detects the above malfunction condition in two consecutive drive cycles or in one drive cycle while the DTC for the same malfunction has been stored in the PCM. • PENDING CODE is available if the PCM detects the above malfunction condition during the first drive cycle. • FREEZE FRAME DATA is available. • The DTC is stored in the PCM memory.
POSSIBLE CAUSE	• Front HO2S malfunction • Connector or terminal malfunction • Short to power supply in wiring harness between front HO2S terminal A and PCM terminal 2AD • Short to power supply in wiring harness between front HO2S terminal B and PCM terminal 2Z • PCM malfunction

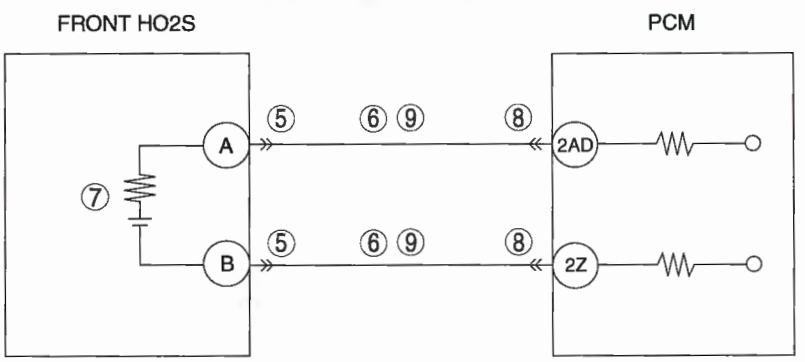

FRONT HO2S
WIRING HARNESS-SIDE CONNECTOR

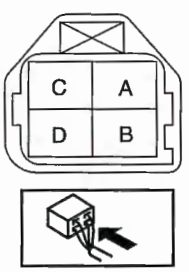

PCM
WIRING HARNESS-SIDE CONNECTOR

2BE	2BA	2AW	2AS	2AO	2AK	2AG	2AC	2Y	2U	2Q	2M	2I	2E	2A
2BF	2BB	2AX	2AT	2AP	2AL	2AH	2AD	2Z	2V	2R	2N	2J	2F	2B
2BG	2BC	2AY	2AU	2AQ	2AM	2AI	2AE	2AA	2W	2S	2O	2K	2G	2C
2BH	2BD	2AZ	2AV	2AR	2AN	2AJ	2AF	2AB	2X	2T	2P	2L	2H	2D

Diagnostic procedure

STEP	INSPECTION		ACTION
1	**VERIFY FREEZE FRAME DATA AND DIAGNOSTIC MONITORING TEST RESULTS HAVE BEEN RECORDED** • Have FREEZE FRAME DATA and DIAGNOSTIC MONITORING TEST RESULTS (HO2S related) been recorded?	Yes	Go to the next step.
		No	Record the FREEZE FRAME DATA and DIAGNOSTIC MONITORING TEST RESULTS on the repair order, then go to the next step.
2	**VERIFY RELATED REPAIR INFORMATION AVAILABILITY** • Verify related Service Bulletins and/or on-line repair information availability. • Is any related repair information available?	Yes	Perform repair or diagnosis according to the available repair information. • If the vehicle is not repaired, go to the next step.
		No	Go to the next step.

STEP	INSPECTION		ACTION
3	**VERIFY RELATED PENDING OR STORED DTC** • Turn the ignition switch off, then to the ON position (Engine off). • Verify the pending code or stored DTCs using the WDS or equivalent. • Is other DTC present?	Yes	Go to the appropriate DTC troubleshooting procedures. (See 01–02A–18 DTC TABLE [L3].)
		No	Go to the next step.
4	**IDENTIFY TRIGGER DTC FOR FREEZE FRAME DATA** • Is DTC P0132 on FREEZE FRAME DATA?	Yes	Go to the next step.
		No	Go to troubleshooting procedures for DTC on FREEZE FRAME DATA. (See 01–02A–18 DTC TABLE [L3].)
5	**INSPECT FRONT HO2S CONNECTOR FOR POOR CONNECTION** • Turn the ignition switch off. • Disconnect the front HO2S connector. • Inspect for poor connection (such as damaged/ pulled-out pins, corrosion). • Is there any malfunction?	Yes	Repair or replace the terminal, then go to Step 9.
		No	Go to the next step.
6	**INSPECT FRONT HO2S CIRCUIT FOR SHORT TO POWER SUPPLY** • Turn the ignition switch to the ON position (Engine off). • Measure the voltage between the following terminals and body ground: — Front HO2S terminal A (wiring harness-side) and body ground — Front HO2S terminal B (wiring harness-side) and body ground • Is the voltage **B+**?	Yes	Repair or replace the wiring harness for a possible short to power supply, then go to Step 9.
		No	Go to the next step.
7	**INSPECT FRONT HO2S** • Inspect the front HO2S. (See 01–40A–37 HEATED OXYGEN SENSOR (HO2S) INSPECTION [L3].) • Is there any malfunction?	Yes	Replace the front HO2S, then go to Step 9. (See 01–15A–5 HO2S Removal Note.)
		No	Go to the next step.
8	**INSPECT PCM CONNECTOR FOR POOR CONNECTION** • Turn the ignition switch off. • Disconnect the PCM connector. • Inspect for poor connection (such as damaged/ pulled-out pins, corrosion). • Is there any malfunction?	Yes	Repair or replace the terminal, then go to the next step.
		No	Go to the next step.
9	**VERIFY TROUBLESHOOTING OF DTC P0132 COMPLETED** • Make sure to reconnect all disconnected connectors. • Clear the DTC from the PCM memory using the WDS or equivalent. • Perform the KOEO self-test (using WDS or equivalent) or the HO2S heater, HO2S, and TWC Repair Verification Drive Mode (not using WDS or equivalent). (See 01–02A–12 KOEO/KOER SELF TEST [L3].) (See 01–02A–13 OBD-II DRIVE MODE [L3].) • Is the PENDING CODE for this DTC present?	Yes	Replace the PCM, then go to the next step. (See 01–40A–9 PCM REMOVAL/INSTALLATION [L3].)
		No	Go to the next step.
10	**VERIFY AFTER REPAIR PROCEDURE** • Perform the "AFTER REPAIR PROCEDURE". (See 01–02A–12 AFTER REPAIR PROCEDURE [L3].) • Are any DTCs present?	Yes	Go to the applicable DTC inspection. (See 01–02A–18 DTC TABLE [L3].)
		No	DTC troubleshooting completed.

Except for California Emission Regulation Applicable ATX Model

DTC P0132	Front HO2S circuit high input
DETECTION CONDITION	• The PCM monitors the input voltage from the front HO2S when the engine is running. If the input voltage is **less than 1.0 V** for **2 s**, the PCM determines that the front HO2S circuit voltage is high. **Diagnostic support note** • This is a continuous monitor (HO2S). • The MIL illuminates if the PCM detects the above malfunction condition in two consecutive drive cycles or in one drive cycle while the DTC for the same malfunction has been stored in the PCM. • PENDING CODE is available if the PCM detects the above malfunction condition during the first drive cycle. • FREEZE FRAME DATA is available. • Are any DTCs is stored in the PCM memory.
POSSIBLE CAUSE	• Front HO2S malfunction • Connector or terminal malfunction • Short to power supply in wiring harness between front HO2S terminal 1C and PCM terminal 2Z • Short to power supply in wiring harness between front HO2S terminal 1B and PCM terminal 2AC • Short to power supply in wiring harness between front HO2S terminal 1A and PCM terminal 2AD • PCM malfunction

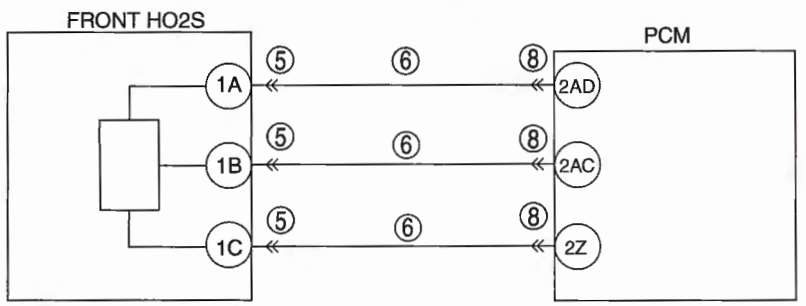

FRONT HO2S
WIRING HARNESS-SIDE CONNECTOR

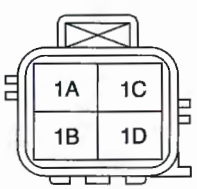

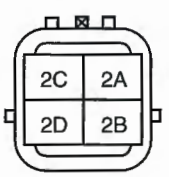

PCM
WIRING HARNESS-SIDE CONNECTOR

2BE	2BA	2AW	2AS	2AO	2AK	2AG	2AC	2Y	2U	2Q	2M	2I	2E	2A
2BF	2BB	2AX	2AT	2AP	2AL	2AH	2AD	2Z	2V	2R	2N	2J	2F	2B
2BG	2BC	2AY	2AU	2AQ	2AM	2AI	2AE	2AA	2W	2S	2O	2K	2G	2C
2BH	2BD	2AZ	2AV	2AR	2AN	2AJ	2AF	2AB	2X	2T	2P	2L	2H	2D

Diagnostic procedure

STEP	INSPECTION		ACTION
1	**VERIFY FREEZE FRAME DATA AND DIAGNOSTIC MONITORING TEST RESULTS HAVE BEEN RECORDED** • Have FREEZE FRAME DATA and DIAGNOSTIC MONITORING TEST RESULTS (HO2S related) been recorded?	Yes	Go to the next step.
		No	Record the FREEZE FRAME DATA and DIAGNOSTIC MONITORING TEST RESULTS on the repair order, then go to the next step.
2	**VERIFY RELATED REPAIR INFORMATION AVAILABILITY** • Verify related Service Information availability. • Is any related Service Information available?	Yes	Perform repair or diagnosis according to the available Service information. If the vehicle is not repaired, go to the next step.
		No	Go to the next step.
3	**VERIFY RELATED PENDING OR STORED DTC** • Turn the ignition switch off, then to the ON position (Engine off). • Verify the pending code or stored DTCs using the WDS or equivalent. • Are other DTCs present?	Yes	Go to the appropriate DTC troubleshooting procedures. (See 01–02A–18 DTC TABLE [L3].)
		No	Go to the next step.
4	**IDENTIFY TRIGGER DTC FOR FREEZE FRAME DATA** • Is the DTC P0132 on FREEZE FRAME DATA?	Yes	Go to the next step.
		No	Go to troubleshooting procedures for DTC on FREEZE FRAME DATA. (See 01–02A–18 DTC TABLE [L3].)
5	**INSPECT FRONT HO2S CONNECTOR FOR POOR CONNECTION** • Turn the ignition switch off. • Disconnect the front HO2S connector. • Inspect for poor connection (such as damaged/ pulled-out pins, corrosion). • Is there any malfunction?	Yes	Repair or replace the terminal, then go to Step 9.
		No	Go to the next step.
6	**INSPECT FRONT HO2S CIRCUIT FOR SHORT TO POWER SUPPLY** • Turn the ignition switch to the ON position (Engine off). • Measure the voltage between the following terminals and body ground: — Front HO2S terminal 1A (wiring harness-side) and body ground — Front HO2S terminal 1B (wiring harness-side) and body ground — Front HO2S terminal 1C (wiring harness-side) and body ground • Is the voltage **B+**?	Yes	Repair or replace the wiring harness for a possible short to power supply, then go to Step 9.
		No	Go to the next step.
7	**INSPECT FRONT HO2S** • Inspect the front HO2S. (See 01–40A–37 HEATED OXYGEN SENSOR (HO2S) INSPECTION [L3].) • Is there any malfunction?	Yes	Replace the front HO2S, then go to Step 9. (See 01–15A–2 EXHAUST SYSTEM REMOVAL/ INSTALLATION [L3].) (See 01–15A–2 EXHAUST SYSTEM REMOVAL/ INSTALLATION [L3].)
		No	Go to the next step.
8	**INSPECT PCM CONNECTOR FOR POOR CONNECTION** • Turn the ignition switch off. • Disconnect the PCM connector. • Inspect for poor connection (such as damaged/ pulled-out pins, corrosion). • Is there any malfunction?	Yes	Repair or replace the terminal, then go to the next step.
		No	Go to the next step.
9	**VERIFY TROUBLESHOOTING OF DTC P0132 COMPLETED** • Make sure to reconnect all disconnected connectors. • Clear the DTC from the PCM memory using the WDS or equivalent. • Perform the KOEO or KOER self-test. (See 01–02A–12 KOEO/KOER SELF TEST [L3].) • Is the PENDING CODE for this DTC present?	Yes	Replace the PCM, then go to the next step. (See 01–40A–9 PCM REMOVAL/INSTALLATION [L3].)
		No	Go to the next step.
10	**VERIFY AFTER REPAIR PROCEDURE** • Perform the "AFTER REPAIR PROCEDURE". (See 01–02A–12 AFTER REPAIR PROCEDURE [L3].) • Are any DTCs present?	Yes	Go to the applicable DTC inspection. (See 01–02A–18 DTC TABLE [L3].)
		No	DTC troubleshooting completed.

DTC P0133 [L3]

E6U010200100W29

California Emission Regulation Applicable ATX Model

DTC P0133	Front HO2S circuit problem
DETECTION CONDITION	• The PCM monitors the front HO2S output current and short term fuel trim (SHRTFT) when the following conditions are met. If the output current response is lower than that expected from the fuel trim, the PCM determines that the front HO2S circuit is slow. **MONITORING CONDITIONS** — HO2S heater, HO2S, and TWC Repair Verification Drive Mode — Following conditions are met: • Front HO2S heater monitor is completed. • Fuel system loop status is closed loop fuel control. **Diagnostic support note** • This is an intermittent monitor. (HO2S) • MIL illuminates if PCM detects above malfunction condition in two consecutive drive cycles or in one drive cycle while DTC for the same malfunction has been stored in PCM. • DIAGNOSTIC MONITORING TEST RESULTS is available. • PENDING CODE is available if the PCM detects the above malfunction condition during first drive cycle. • FREEZE FRAME DATA is available. • DTC is stored in the PCM memory.
POSSIBLE CAUSE	• Front HO2S deterioration • Front HO2S malfunction • Front HO2S looseness • Pressure regulator (built-in fuel pump unit) malfunction • Fuel pump malfunction • Clogged or restricted fuel filter (built-in fuel pump unit) • Fuel leakage in fuel line between fuel distribution pipe and fuel pump • Exhaust system leakage • Purge solenoid valve malfunction • Improper connection purge solenoid hose • Insufficient compression • Engine malfunction (Engine coolant leakage)

Diagnostic procedure

STEP	INSPECTION		ACTION
1	**VERIFY FREEZE FRAME DATA AND DIAGNOSTIC MONITORING TEST RESULTS HAVE BEEN RECORDED** • Have FREEZE FRAME DATA and DIAGNOSTIC MONITORING TEST RESULTS (HO2S related) been recorded?	Yes	Go to the next step.
		No	Record the FREEZE FRAME DATA and DIAGNOSTIC MONITORING TEST RESULTS on the repair order, then go to the next step.
2	**VERIFY RELATED SERVICE INFORMATION AVAILABILITY** • Verify related Service Information availability. • Is any related Service Information available?	Yes	Perform repair or diagnosis according to the available Service Information. • If the vehicle is not repaired, go to the next step.
		No	Go to the next step.
3	**VERIFY RELATED PENDING AND STORED DTC** • Turn the ignition switch off, then to the ON position (Engine off). • Verify the pending or stored DTCs using the WDS or equivalent. • Is DTC P0443 also present?	Yes	Go to DTC P0443 troubleshooting procedures, then go to Step 13.
		No	Go to the next step.
4	**IDENTIFY TRIGGER DTC FOR FREEZE FRAME DATA** • Is DTC P0133 on FREEZE FRAME DATA?	Yes	Go to the next step.
		No	Go to troubleshooting procedures for DTC on FREEZE FRAME DATA. (See 01–02A–18 DTC TABLE [L3].)
5	**VERIFY CURRENT INPUT SIGNAL STATUS** • Warm up the engine. • Access O2S11 PID using the WDS or equivalent. • Inspect PID under following accelerator pedal conditions in PARK. • Is PID normal? — **Loss than 1 mA** when suddenly depressing accelerator pedal (rich condition). — **More than 1 mA** just after release of accelerator pedal (lean condition).	Yes	Go to step 8.
		No	Go to the next step.

STEP	INSPECTION		ACTION
6	**INSPECT INSTALLATION OF FRONT HO2S** • Inspect if the front HO2S is loosely installed. • Is the front HO2S installed securely?	Yes	Go to the next step.
		No	Retighten the front HO2S, then go to Step 13.
7	**INSPECT GAS LEAKAGE FROM EXHAUST SYSTEM** • Visually inspect if there is any gas leakage is found between the exhaust manifold and front HO2S. • Is there gas leakage?	Yes	Repair or replace the malfunctioning exhaust part, then go to Step 13.
		No	Replace sensor, then go to Step 13.
8	**INSPECT LONG TERM FUEL TRIM** • Access the LONGFT1 PID. • Compare it with FREEZE FRAME DATA recorded at Step 1. • Is it below FFD value?	Yes	The engine is driven under rich condition. Go to the next step.
		No	The engine is driven under lean condition. Go to Step 10.
9	**INSPECT FUEL LINE PRESSURE (EXCESSIVE FUEL LINE PRESSURE)** • Turn the ignition switch off. • Inspect the fuel line pressure while the engine running. (See 01–14A–7 FUEL LINE PRESSURE INSPECTION [L3, AJ].) • Is the fuel line pressure normal?	Yes	Go to Step 12.
		No	Inspect the fuel pump maximum pressure, and fuel return pipe for clogging. (See 01–14A–21 FUEL PUMP UNIT INSPECTION [L3, AJ].) • If there is any problem, repair or replace the parts. • If all items above are normal, replace the fuel pump unit. Then go to Step 13.
10	**INSPECT FUEL LINE PRESSURE (LOW FUEL LINE PRESSURE)** • Turn the ignition switch off. • Inspect the fuel line pressure while the engine running. (See 01–14A–7 FUEL LINE PRESSURE INSPECTION [L3, AJ].) • Is the fuel line pressure normal?	Yes	Go to step 12.
		No	Go to the next step.
1	**INSPECT FUEL LINE FROM FUEL PUMP TO FUEL DELIVERY PIPE** • Visually inspect the fuel line for any leakage. • Is there fuel leakage?	Yes	Replace the fuel line, then go to Step 13.
		No	Inspect the fuel filters for the following: • Foreign material or stain inside the fuel filter (low-pressure side) Perform the following actions according to the result. • If foreign material or stain is found inside the fuel filter (low-pressure side), clean the fuel tank and fuel filter. • If normal, replace the fuel pump unit. Then go to Step 13.
12	**INSPECT SEALING OF ENGINE COOLANT PASSAGE** • Perform the "ENGINE COOLANT LEAKAGE INSPECTION". (See 01–12A–7 ENGINE COOLANT LEAKAGE INSPECTION [L3, AJ].) • Is there any malfunction?	Yes	Go to the next step.
		No	Repair or replace the malfunctioning part according to the inspection results. Then go to the next step.
13	**VERIFY TROUBLESHOOTING OF DTC P0133 COMPLETED** • Make sure to reconnect all disconnected connectors. • Turn the ignition switch to the ON position. (Engine off) • Clear the DTC from the memory using the WDS or equivalent. • Perform the HO2S heater, HO2S, and TWC Repair Verification Drive Mode. (See 01–02A–13 OBD-II DRIVE MODE [L3].) • Is the PENDING CODE for this DTC present?	Yes	Replace the PCM, then go to the next step. (See 01–40A–9 PCM REMOVAL/INSTALLATION [L3].)
		No	Go to the next step.
14	**VERIFY AFTER REPAIR PROCEDURE** • Perform the "AFTER REPAIR PROCEDURE". (See 01–02A–12 AFTER REPAIR PROCEDURE [L3].) • Are any DTC present?	Yes	Go to the applicable DTC troubleshooting. (See 01–02A–18 DTC TABLE [L3].)
		No	Troubleshooting completed.

Except for California Emission Regulation Applicable ATX Model

DTC P0133	Front HO2S circuit problem

DETECTION CONDITION	• Oxygen sensor malfunction is detected by measuring of the average frequency of oxygen sensor signal, time required to pass from rich to lean, time required to pass from lean to rich.
	• The average frequency of oxygen sensor signal is more than the threshold value.
	MONITORING CONDITIONS
	— HO2S heater, HO2S, and TWC Repair Verification Drive Mode
	— Following conditions are met:
	  • Front HO2S heater monitor is completed.
	  • Fuel system loop status is closed loop fuel control.
	— ECT sensor and front HO2S heater and normal.
	— Engine speed: **1,500—3,500 rpm**
	— Charging efficiency: **15—63 % (at engine speed is 2,500 rpm)**
	— Engine coolant temperature **above 70 °C {158 °F}**
	Diagnostic support note
	• This is an intermittent monitor. (HO2S)
	• The MIL illuminates if the PCM detects the above malfunction condition in two consecutive drive cycles or in one drive cycle while the DTC for the same malfunction has been stored in the PCM.
	• DIAGNOSTIC MONITORING TEST RESULTS is available.
	• PENDING CODE is available if the PCM detects the above malfunction condition during first drive cycle.
	• FREEZE FRAME DATA is available.
	• DTC is stored in the PCM memory.

POSSIBLE CAUSE	• Front HO2S deterioration • Front HO2S malfunction • Front HO2S looseness • Fuel pump malfunction • Fuel pressure regulation malfunction • Clogged or restricted fuel filter (built-in fuel pump unit) • Fuel leakage in fuel line between fuel distribution pipe and fuel pump • Exhaust system leakage • Purge solenoid valve malfunction • Improper connection purge solenoid hose • Insufficient compression • Engine malfunction (Engine coolant leakage)

Diagnostic procedure

STEP	INSPECTION		ACTION
1	**VERIFY FREEZE FRAME DATA AND DIAGNOSTIC MONITORING TEST RESULTS HAVE BEEN RECORDED** • Have FREEZE FRAME DATA and DIAGNOSTIC MONITORING TEST RESULTS (HO2S related) been recorded?	Yes	Go to the next step.
		No	Record the FREEZE FRAME DATA and DIAGNOSTIC MONITORING TEST RESULTS on the repair order, then go to the next step.
2	**VERIFY RELATED REPAIR INFORMATION AVAILABILITY** • Verify related Service Information availability. • Is any related Service Information available?	Yes	Perform repair or diagnosis according to the available Service information. If the vehicle is not repaired, go to the next step.
		No	Go to the next step.
3	**VERIFY RELATED PENDING AND STORED DTC** • Turn the ignition switch off, then to the ON position (Engine off). • Verify the pending or stored DTCs using the WDS or equivalent. • Is the DTC P0443 also present?	Yes	Go to DTC P0443 troubleshooting procedures, then go to Step 13.
		No	Go to the next step.
4	**IDENTIFY TRIGGER DTC FOR FREEZE FRAME DATA** • Is the DTC P0133 on FREEZE FRAME DATA?	Yes	Go to the next step.
		No	Go to troubleshooting procedures for DTC on FREEZE FRAME DATA. (See 01–02A–18 DTC TABLE [L3].)
5	**VERIFY CURRENT INPUT SIGNAL STATUS** • Warm up the engine. • Access O2S11 PID using the WDS or equivalent. • Inspect PID under following accelerator pedal conditions in PARK (ATX) or NEUTRAL (MTX). • Is PID normal? — **–1.0 —1.0 A** when idle — **More than 0.25 mA** just after release of accelerator pedal (lean condition).	Yes	Go to Step 8.
		No	Go to the next step.

STEP	INSPECTION		ACTION
6	**INSPECT INSTALLATION OF FRONT HO2S** • Inspect if the front HO2S is loosely installed. • Is the front HO2S installed securely?	Yes	Go to the next step.
		No	Retighten the front HO2S, then go to Step 13.
7	**INSPECT GAS LEAKAGE FROM EXHAUST SYSTEM** • Visually inspect if there is any gas leakage is found between the exhaust manifold and front HO2S. • Is there gas leakage?	Yes	Repair or replace the malfunctioning exhaust part, then go to Step 13.
		No	Replace the sensor, then go to Step 13.
8	**INSPECT LONG TERM FUEL TRIM** • Access the LONGFT1 PID. • Compare it with FREEZE FRAME DATA recorded at Step 1. • Is it below FFD value?	Yes	The engine is driven under rich condition. Go to the next step.
		No	The engine is driven under lean condition. Go to Step 10.
9	**INSPECT FUEL LINE PRESSURE (EXCESSIVE FUEL LINE PRESSURE)** • Turn the ignition switch off. • Inspect the fuel line pressure while the engine running. (See 01–14A–7 FUEL LINE PRESSURE INSPECTION [L3, AJ].) • Is the fuel line pressure normal?	Yes	Go to Step 12.
		No	Inspect the fuel pump maximum pressure, and fuel return pipe for clogging. (See 01–14A–21 FUEL PUMP UNIT INSPECTION [L3, AJ].) • If there is any problem, repair or replace the parts. • If all items above are normal, replace the fuel pump unit. Then go to Step 13.
10	**INSPECT FUEL LINE PRESSURE (LOW FUEL LINE PRESSURE)** • Turn the ignition switch off. • Inspect the fuel line pressure while the engine running. (See 01–14A–7 FUEL LINE PRESSURE INSPECTION [L3, AJ].) • Is the fuel line pressure normal?	Yes	Go to Step 12.
		No	Go to the next step.
11	**INSPECT FUEL LINE FROM FUEL PUMP TO FUEL DELIVERY PIPE** • Visually inspect the fuel line for any leakage. • Is there fuel leakage?	Yes	Replace the fuel line, then go to Step 13.
		No	Inspect the fuel filters for the following: • Foreign material or stain inside the fuel filter (low-pressure side) Perform the following actions according to the result. • If foreign material or stain is found inside the fuel filter (low-pressure side), clean the fuel tank and fuel filter. • If normal, replace the fuel pump unit. Then go to Step 13.
12	**INSPECT SEALING OF ENGINE COOLANT PASSAGE** • Perform the "ENGINE COOLANT LEAKAGE INSPECTION". (See 01–12A–7 ENGINE COOLANT LEAKAGE INSPECTION [L3, AJ].) • Is there any malfunction?	Yes	Go to the next step.
		No	Repair or replace the malfunctioning part according to the inspection results. Then go to the next step.
13	**VERIFY TROUBLESHOOTING OF DTC P0133 COMPLETED** • Make sure to reconnect all disconnected connectors. • Turn the ignition switch to the ON position. (Engine off) • Clear the DTC from the memory using the WDS or equivalent. • Perform the HO2S heater, HO2S, and TWC Repair Verification Drive Mode. (See 01–02A–13 OBD-II DRIVE MODE [L3].) • Is the PENDING CODE for this DTC present?	Yes	Replace the PCM, then go to the next step. (See 01–40A–9 PCM REMOVAL/INSTALLATION [L3].)
		No	Go to the next step.
14	**VERIFY AFTER REPAIR PROCEDURE** • Perform the "AFTER REPAIR PROCEDURE". (See 01–02A–12 AFTER REPAIR PROCEDURE [L3].) • Are any DTC present?	Yes	Go to the applicable DTC troubleshooting. (See 01–02A–18 DTC TABLE [L3].)
		No	Troubleshooting completed.

DTC P0134 [L3]

E6U010200100W30

California Emission Regulation Applicable ATX Model

DTC P0134	Front HO2S no activity detected
DETECTION CONDITION	• The PCM monitors the front HO2S element impedance when the following conditions are met. If the front HO2S element impedance is **150 ohms or more**, the PCM determines that front HO2S is not activated. **MONITORING CONDITIONS** — HO2S, HO2S heater and TWC Repair Verification Drive Mode — Following conditions are met • Time from engine start is **above 30 s** (ECT when engine start is **20 °C {68 °F}**). **Diagnostic support note** • This is an intermittent monitor (HO2S). • The MIL illuminates if the PCM detects the above malfunction condition in two consecutive drive cycles or in one drive cycle while the DTC for the same malfunction has been stored in the PCM. • PENDING CODE is available if the PCM detects the above malfunction condition during the first drive cycle. • FREEZE FRAME DATA is available. • The DTC is stored in the PCM memory.
POSSIBLE CAUSE	• Front HO2S deterioration • Front HO2S heater malfunction • Open circuit or short to ground in wiring harness between front HO2S terminal A and PCM terminal 2AD

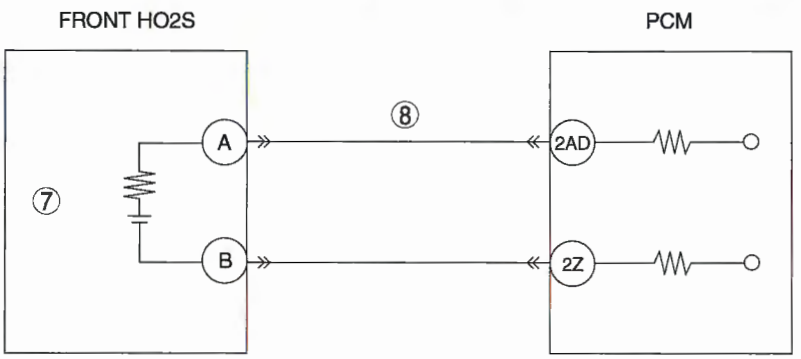

FRONT HO2S
WIRING HARNESS-SIDE CONNECTOR

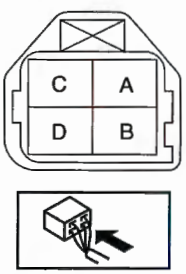

PCM
WIRING HARNESS-SIDE CONNECTOR

2BE	2BA	2AW	2AS	2AO	2AK	2AG	2AC	2Y	2U	2Q	2M	2I	2E	2A
2BF	2BB	2AX	2AT	2AP	2AL	2AH	2AD	2Z	2V	2R	2N	2J	2F	2B
2BG	2BC	2AY	2AU	2AQ	2AM	2AI	2AE	2AA	2W	2S	2O	2K	2G	2C
2BH	2BD	2AZ	2AV	2AR	2AN	2AJ	2AF	2AB	2X	2T	2P	2L	2H	2D

Diagnostic procedure

STEP	INSPECTION		ACTION
1	**VERIFY FREEZE FRAME DATA AND DIAGNOSTIC MONITORING TEST RESULTS HAVE BEEN RECORDED** • Have FREEZE FRAME DATA and DIAGNOSTIC MONITORING TEST RESULTS (HO2S related) been recorded?	Yes	Go to the next step.
		No	Record the FREEZE FRAME DATA and DIAGNOSTIC MONITORING TEST RESULTS on the repair order, then go to the next step.
2	**VERIFY RELATED REPAIR INFORMATION AVAILABILITY** • Verify related Service Bulletins and/or on-line repair information availability. • Is any related repair information available?	Yes	Perform repair or diagnosis according to the available repair information. • If the vehicle is not repaired, go to the next step.
		No	Go to the next step.

STEP	INSPECTION		ACTION
3	**VERIFY RELATED PENDING AND STORED DTC** **Note** • If fuel monitor DTC, DTC P0132 is retrieved, ignore it until P0134 is fixed. • Turn the ignition switch off, then to the ON position. (Engine off) • Verify pending and stored DTCs using the WDS or equivalent. • Is other DTC present?	Yes	Go to the appropriate DTC troubleshooting procedures.
		No	Go to the next step.
4	**IDENTIFY TRIGGER DTC FOR FREEZE FRAME DATA** • Is DTC P0134 on FREEZE FRAME DATA?	Yes	Go to the next step.
		No	Go to troubleshooting procedures for DTC on FREEZE FRAME DATA. (See 01–02A–18 DTC TABLE [L3].)
5	**INSPECT INSTALLATION OF FRONT HO2S** • Inspect if the front HO2S is loosely installed. • Is the sensor installed securely?	Yes	Go to the next step.
		No	Install sensor securely, then go to Step 10.
6	**INSPECT FRONT HO2S HEATER** • Inspect the front HO2S heater. (See 01–40A–37 HEATED OXYGEN SENSOR (HO2S) INSPECTION [L3].) • Is the front HO2S heater normal?	Yes	Go to the next step.
		No	Replace the front HO2S, then go to Step 10. (See 01–15A–5 HO2S Removal Note.)
7	**INSPECT FRONT HO2S** • Inspect the front HO2S. (See 01–40A–37 HEATED OXYGEN SENSOR (HO2S) INSPECTION [L3].) • Is there any malfunction?	Yes	Go to the next step.
		No	Replace the front HO2S, then go to Step 10. (See 01–15A–5 HO2S Removal Note.)
8	**INSPECT FRONT HO2S SIGNAL CIRCUIT FOR SHORT TO POWER SUPPLY CIRCUIT** • Turn the ignition switch to OFF. • Disconnect the front HO2S connector. • Measure the voltage between front HO2S terminal A (wiring harness-side) and GND. • Is the voltage **above 3.22 V**?	Yes	Repair or replace for short to power supply circuit, then go to Step 10.
		No	Go to the next step.
9	**INSPECT FRONT HO2S SIGNAL CIRCUIT FOR OPEN** • Disconnect the PCM connector. • Inspect for continuity between PCM terminal 2AD (wiring harness-side) and front HO2S terminal A (wiring harness-side). • Is there continuity?	Yes	Go to the next step.
		No	Repair or replace for open circuit, then go to the net step.
10	**VERIFY TROUBLESHOOTING OF DTC P0134 COMPLETED** • Make sure to reconnect all disconnected connectors. • Turn the ignition switch to the ON position. (Engine off) • Clear the DTC from memory using the WDS or equivalent. • Perform the KOER self-test (using WDS or equivalent) or the HO2S heater, HO2S, and TWC Repair Verification Drive Mode (not using WDS or equivalent). (See 01–02A–12 KOEO/KOER SELF TEST [L3].) (See 01–02A–13 OBD-II DRIVE MODE [L3].) • Is the PENDING CODE for this DTC present?	Yes	Replace the PCM, then go to the next step. (See 01–40A–9 PCM REMOVAL/INSTALLATION [L3].)
		No	Go to the next step.
11	**VERIFY AFTER REPAIR PROCEDURE** • Perform the "AFTER REPAIR PROCEDURE". (See 01–02A–12 AFTER REPAIR PROCEDURE [L3].) • Are any DTC present?	Yes	Go to the applicable DTC troubleshooting. (See 01–02A–18 DTC TABLE [L3].)
		No	Troubleshooting completed.

Except for California Emission Regulation Applicable ATX Model

DTC P0134	Front HO2S no activity detected
DETECTION CONDITION	• The PCM monitors the input voltage from front HO2S when the following conditions are met. Under the following monitoring conditions, the input voltage **more than 3.22 V**, the PCM determines that the front HO2S is not activated. **MONITORING CONDITIONS** — HO2S, HO2S heater and TWC Repair Verification Drive Mode — Following conditions are met • Front HO2S heater is turned on **for more than 30 s**. • Battery voltage: **10 —18 V** **Diagnostic support note** • This is an intermittent monitor (HO2S). • The MIL illuminates if the PCM detects the above malfunction condition in two consecutive drive cycles or in one drive cycle while the DTC for the same malfunction has been stored in the PCM. • PENDING CODE is available if the PCM detects the above malfunction condition during first drive cycle. • FREEZE FRAME DATA is available. • DTC is stored in the PCM memory.
POSSIBLE CAUSE	• Front HO2S deterioration • Front HO2S heater malfunction • Leakage exhaust system • Open or short circuit in wiring harness between front HO2S terminal 1A and PCM terminal 2AD • Open or short circuit in wiring harness between front HO2S terminal 1B and PCM terminal 2AC • Open or short circuit in wiring harness between front HO2S terminal 1C and PCM terminal 2Z • Open or short circuit in wiring harness between front HO2S terminal 2D and PCM terminal 2BG • Insufficient compression • Engine malfunction

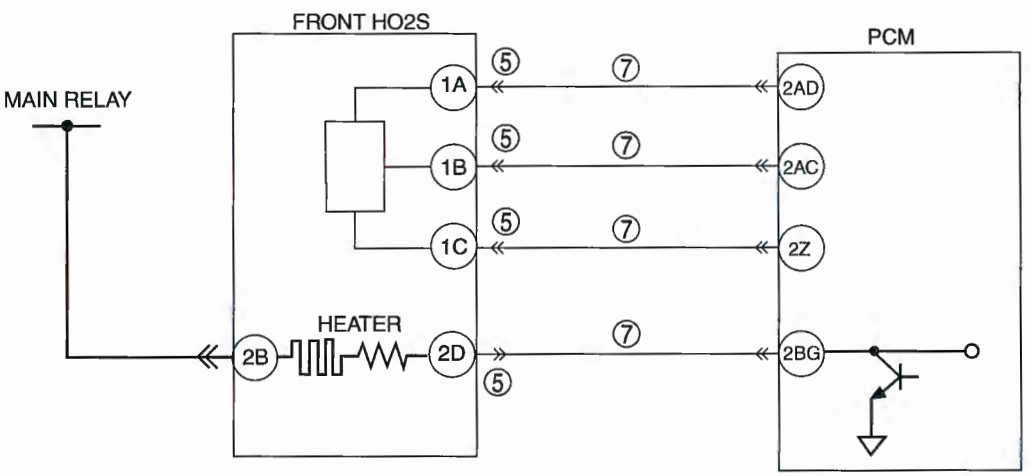

FRONT HO2S
WIRING HARNESS-SIDE CONNECTOR

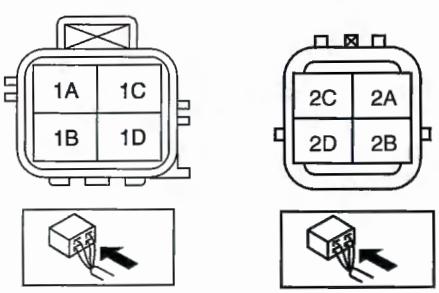

PCM
WIRING HARNESS-SIDE CONNECTOR

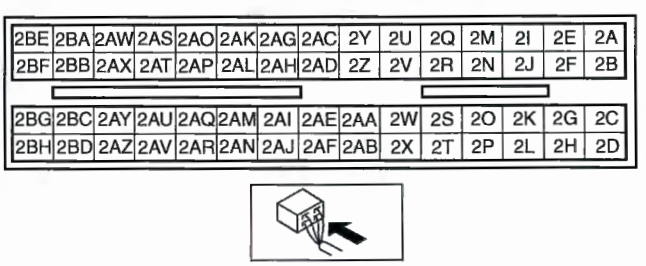

Diagnostic procedure

STEP	INSPECTION		ACTION
1	**VERIFY FREEZE FRAME DATA AND DIAGNOSTIC MONITORING TEST RESULTS HAVE BEEN RECORDED** • Have FREEZE FRAME DATA and DIAGNOSTIC MONITORING TEST RESULTS (HO2S related) been recorded?	Yes	Go to the next step.
		No	Record the FREEZE FRAME DATA and DIAGNOSTIC MONITORING TEST RESULTS on the repair order, then go to the next step.

STEP	INSPECTION		ACTION
2	**VERIFY RELATED REPAIR INFORMATION AVAILABILITY** • Verify related Service Information availability. • Is any related Service Information available?	Yes	Perform repair or diagnosis according to the available Service information. If the vehicle is not repaired, go to the next step.
		No	Go to the next step.
3	**VERIFY RELATED PENDING AND STORED DTC** **Note** • If fuel monitor DTC, DTC P0132 is retrieved, ignore it until P0134 is fixed. • Turn the ignition switch off, then to the ON position. (Engine off) • Verify pending and stored DTCs using the WDS or equivalent. • Is the DTC P2237 or P2251 also present?	Yes	Go to the appropriate DTC troubleshooting procedures.
		No	Go to the next step.
4	**IDENTIFY TRIGGER DTC FOR FREEZE FRAME DATA** • Is DTC P0134 on FREEZE FRAME DATA?	Yes	Go to the next step.
		No	Go to troubleshooting procedures for DTC on FREEZE FRAME DATA. (See 01–02A–18 DTC TABLE [L3].)
5	**VERIFY CURRENT INPUT SIGNAL STATUS** • Warm up engine. • Access O2S11 PID using the WDS or equivalent. • Verify PID while racing engine in PARK (ATX) or NEUTRAL (MTX). • Is PID normal? — **–1.0 —1.0 A** when idle — **More than 0.25 mA** just after releasing the of accelerator pedal (lean condition)	Yes	Go to Step 8.
		No	Go to the next step.
6	**INSPECT INSTALLATION OF FRONT HO2S** • Inspect if the front HO2S is loosely installed. • Is the sensor installed securely?	Yes	Go to the next step.
		No	Install sensor securely, then go to Step 10.
7	**INSPECT GAS LEAKAGE FROM EXHAUST SYSTEM** • Visually inspect if there is any gas leakage between the exhaust manifold and front HO2S. • Is there gas leakage?	Yes	Repair or replace any malfunctioning exhaust part, then go to Step 10.
		No	• Inspect the following harnesses at wiring harness-side connector terminals for open or short circuit, repair or replace wiring harness if necessary. — Front HO2S terminal 1A and PCM terminal 2AD — Front HO2S terminal 1B and PCM terminal 2AC — Front HO2S terminal 1C and PCM terminal 2Z — Front HO2S terminal 2D and PCM terminal 2BG • If all items above are normal, replace malfunctioning sensor. Then go to Step 10.
8	**INSPECT SEALING OF ENGINE COOLANT PASSAGE** • Perform the ENGINE COOLANT LEAKAGE INSPECTION. (See 01–12A–7 ENGINE COOLANT LEAKAGE INSPECTION [L3, AJ].) • Is there any malfunction?	Yes	Repair or replace the malfunctioning part according to inspection results, then go to Step 10.
		No	Go to the next step.
9	**INSPECT ENGINE COMPRESSION** • Inspect engine compression. (See 01–10A–4 COMPRESSION INSPECTION [L3].) • Is it normal?	Yes	Go to the next step.
		No	Perform engine overhaul for repairs, then go to the next step.

STEP	INSPECTION		ACTION
10	**VERIFY TROUBLESHOOTING OF DTC P0134 COMPLETED** • Make sure to reconnect all disconnected connectors. • Turn the ignition switch to the ON position. (Engine off) • Clear the DTC from memory using the WDS or equivalent. • Perform the KOER self-test. (See 01–02A–12 KOEO/KOER SELF TEST [L3].) • Is the PENDING CODE for this DTC present?	Yes	Replace the PCM, then go to the next step. (See 01–40A–9 PCM REMOVAL/INSTALLATION [L3].)
		No	Go to the next step.
11	**VERIFY AFTER REPAIR PROCEDURE** • Perform the "AFTER REPAIR PROCEDURE". (See 01–02A–12 AFTER REPAIR PROCEDURE [L3].) • Are any DTC present?	Yes	Go to the applicable DTC troubleshooting. (See 01–02A–18 DTC TABLE [L3].)
		No	Troubleshooting completed.

DTC P0137 [L3]

E6U010200100W32

DTC P0137	Rear HO2S circuit low input
DETECTION CONDITION	• The PCM monitors input voltage from rear HO2S. If the input voltage from the rear HO2S is below **0.1 V** for **35.2 s** the PCM determines that circuit input is low. **MONITORING CONDITIONS** — HO2S, HO2S heater and TWC repair verification drive mode — Following conditions are met. • Engine speed is **above 1,500 rpm**. • Engine coolant temperature is **above 70 °C {158 °F}**. • Fuel injector control in rear HO2S closed loop control. • The PCM monitors the input voltage from the rear HO2S when the following conditions are met. Under the following monitoring conditions, if the input voltage from the rear HO2S does not even **exceed 0.1 V** though the short term fuel trim is controlled up to **20.5 %** for **9.6 s**, the PCM determines that sensor circu input is low. **MONITORING CONDITIONS** — HO2S, HO2S heater and TWC repair verification drive mode — Following conditions are met for **above 20.8 s**. • Engine speed is **above 1,500 rpm**. • Engine coolant temperature is **above 70 °C {158 °F}**. **Diagnostic support note** • This is a continuous monitor (HO2S). • MIL illuminates if PCM detects the above malfunctioning condition in two consecutive drive cycles or in one drive cycle while the DTC for the same malfunction has been stored in the PCM. • PENDING CODE is available if PCM detects the above malfunction conditions during first drive cycle. • FREEZE FRAME DATA is available. • DTC is stored in the PCM memory.
POSSIBLE CAUSE	• Rear HO2S malfunction • Short to ground in wiring between rear HO2S terminal A and PCM terminal 2Q • Open circuit in wiring between rear HO2S terminal A and PCM terminal 2Q • Open circuit in wiring between rear HO2S terminal B and PCM terminal 1BC • PCM malfunction

DTC P0137	Rear HO2S circuit low input

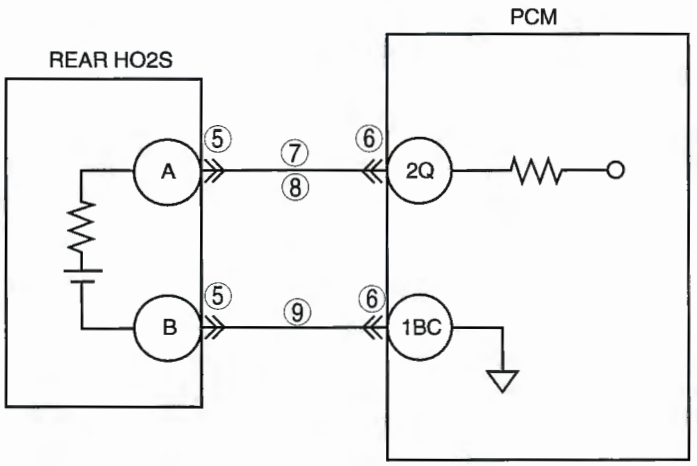

REAR HO2S
HARNESS SIDE CONNECTOR

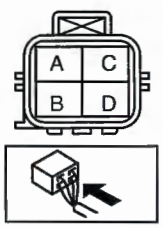

PCM
HARNESS SIDE CONNECTOR

1BE	1BA	1AW	1AS	1AO	1AK	1AG	1AC	1Y	1U	1Q	1M	1I	1E	1A
1BF	1BB	1AX	1AT	1AP	1AL	1AH	1AD	1Z	1V	1R	1N	1J	1F	1B
1BG	1BC	1AY	1AU	1AQ	1AM	1AI	1AE	1AA	1W	1S	1O	1K	1G	1C
1BH	1BD	1AZ	1AV	1AR	1AN	1AJ	1AF	1AB	1X	1T	1P	1L	1H	1D

2BE	2BA	2AW	2AS	2AO	2AK	2AG	2AC	2Y	2U	2Q	2M	2I	2E	2A
2BF	2BB	2AX	2AT	2AP	2AL	2AH	2AD	2Z	2V	2R	2N	2J	2F	2B
2BG	2BC	2AY	2AU	2AQ	2AM	2AI	2AE	2AA	2W	2S	2O	2K	2G	2C
2BH	2BD	2AZ	2AV	2AR	2AN	2AJ	2AF	2AB	2X	2T	2P	2L	2H	2D

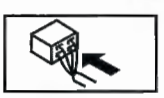

Diagnostic procedure

STEP	INSPECTION		ACTION
1	**VERIFY FREEZE FRAME DATA AND DIAGNOSTIC MONITORING TEST RESULTS HAVE BEEN RECORDED** • Have FREEZE FRAME DATA and DIAGNOSTIC MONITORING TEST RESULTS (HO2S heater related) been recorded?	Yes	Go to the next step.
		No	Record the FREEZE FRAME DATA and DIAGNOSTIC MONITORING TEST RESULTS on the repair order, then go to the next step.
2	**VERIFY RELATED REPAIR INFORMATION AVAILABILITY** • Verify related Service Bulletins and/or on-line repair information availability. • Is any related repair information available?	Yes	Perform repair or diagnosis according to the available repair information. If the vehicle is not repaired, go to next step.
		No	Go to the next step.
3	**VERIFY RELATED PENDING CODE OR STORED DTC** • Turn the ignition switch off, then ON position (Engine off). • Verify the related PENDING CODE or stored DTCs using WDS or equivalent. • Is other DTC present?	Yes	Go to appropriate DTC troubleshooting procedure. (See 01–02A–18 DTC TABLE [L3].)
		No	Go to the next step.
4	**IDENTIFY TRIGGER DTC FOR FREEZE FRAME DATA** • Is DTC P0137 on FREEZE FRAME DATA?	Yes	Go to the next step.
		No	Go to troubleshooting for DTC on FREEZE FRAME DATA. (See 01–02A–18 DTC TABLE [L3].)

STEP	INSPECTION		ACTION
5	**INSPECT HO2S (REAR) CONNECTOR FOR POOR CONNECTION** • Turn ignition key OFF. • Disconnect HO2S (rear) connector. • Inspect for poor connection (such as damaged, pulled-out terminals, corrosion). • Is there any malfunction?	Yes	Repair terminal, then go to Step 11.
		No	Go to next step.
6	**INSPECT PCM CONNECTOR FOR POOR CONNECTION** • Disconnect PCM connector. • Inspect for poor connection (such as damaged, pulled-out terminals, corrosion). • Is there any malfunction?	Yes	Repair terminal, then go to Step 11.
		No	Go to next step.
7	**INSPECT HO2S (REAR) SIGNAL CIRCUIT FOR OPEN** • Inspect continuity between HO2S (rear) terminal A (harness-side) and PCM terminal 2Q (harness-side). • Is there any continuity?	Yes	Go to next step.
		No	Repair or replace harness for open circuit, then go to Step 11.
8	**INSPECT REAR HO2S SIGNAL CIRCUIT FOR SHORT TO GROUND CIRCUIT** • Inspect continuity between rear HO2S (rear) terminal A (harness-side) and body ground. • Is there any voltage reading?	Yes	Replace short to power supply circuit, then go to Step 11.
		No	Go to next step.
9	**INSPECT HO2S (REAR) GROUND CIRCUIT FOR OPEN** • Inspect continuity between HO2S (rear) terminal B (harness-side) and PCM terminal 1BC (harness-side). • Is there any continuity?	Yes	Go to next step.
		No	Repair or replace harness for open circuit, then go to Step 11.
10	**VERIFY CURRENT INPUT SIGNAL STATUS** • Start engine. • Access O2S12 PID using WDS or equivalent. • Verify PID while racing engine at least **10 times** (in NEUTRAL (MTX) or PARK (ATX)). • Does PID reading stay **above 0.45 V**?	Yes	Repair or replace HO2S (rear), then go to next step.
		No	Go to next step.
11	**VERIFY TROUBLESHOOTING OF DTC P0137 COMPLETED** • Make sure to reconnect all disconnected connectors. • Clear DTC from PCM memory using WDS or equivalent. • Perform the KOEO or KOER self-test using the WDS or equivalent. (See 01–02A–12 KOEO/KOER SELF TEST [L3].) • Is the PENDING CODE for this DTC present?	Yes	Replace PCM, then go to next step. (See 01–40A–9 PCM REMOVAL/INSTALLATION [L3].)
		No	Go to the next step.
12	**VERIFY AFTER REPAIR PROCEDURE** • Perform "After Repair Procedure". (See 01–02A–12 AFTER REPAIR PROCEDURE [L3].) • Is there any DTC present?	Yes	Go to applicable DTC inspection. (See 01–02A–18 DTC TABLE [L3].)
		No	Troubleshooting completed.

DTC P0138 [L3]

E6U010200100W21

DTC P0138	Middle*1/Rear*2 HO2S circuit high input
DETECTION CONDITION	• The PCM monitors input voltage from middle*1/rear*2 HO2S. If the input voltage from the middle*1/rear*2 HO2S sensor is **above 1.2 V** for **0.5 s*1/0.8 s*2**, the PCM determines that circuit input is high. **Diagnostic support note** • This is a continues monitor (HO2S). • MIL illuminates if PCM detects above malfunction condition in two consecutive drive cycles or in one drive cycle while DTC for the same malfunction has been stored in PCM. • PENDING CODE is available if PCM detects the above malfunction condition during first drive cycle. • FREEZE FRAME DATA is available. • DTC is stored in the PCM memory.
POSSIBLE CAUSE	• Middle*1/Rear*2 HO2S malfunction • Short to power supply in wiring harness between middle*1/rear*2 HO2S terminal A and PCM terminal 2R*1, 2Q*2 • Middle*1/Rear*2 HO2S or PCM terminal shorted • PCM malfunction

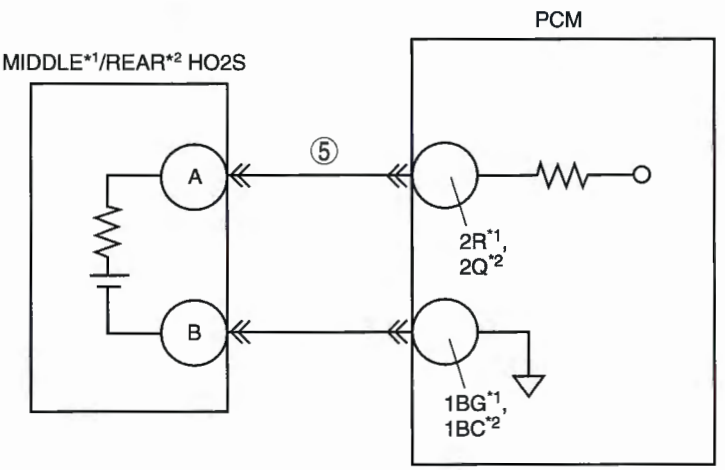

MIDDLE HO2S WIRING HARNESS-SIDE CONNECTOR*1

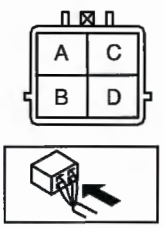

REAR HO2S WIRING HARNESS-SIDE CONNECTOR*2

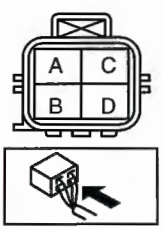

PCM HARNESS SIDE CONNECTOR

1BE	1BA	1AW	1AS	1AO	1AK	1AG	1AC	1Y	1U	1Q	1M	1I	1E	1A
1BF	1BB	1AX	1AT	1AP	1AL	1AH	1AD	1Z	1V	1R	1N	1J	1F	1B
1BG	1BC	1AY	1AU	1AQ	1AM	1AI	1AE	1AA	1W	1S	1O	1K	1G	1C
1BH	1BD	1AZ	1AV	1AR	1AN	1AJ	1AF	1AB	1X	1T	1P	1L	1H	1D

2BE	2BA	2AW	2AS	2AO	2AK	2AG	2AC	2Y	2U	2Q	2M	2I	2E	2A
2BF	2BB	2AX	2AT	2AP	2AL	2AH	2AD	2Z	2V	2R	2N	2J	2F	2B
2BG	2BC	2AY	2AU	2AQ	2AM	2AI	2AE	2AA	2W	2S	2O	2K	2G	2C
2BH	2BD	2AZ	2AV	2AR	2AN	2AJ	2AF	2AB	2X	2T	2P	2L	2H	2D

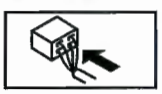

*1 : California emission regulation applicable ATX model
*2 : Except for California emission regulation applicable ATX model

Diagnostic procedure

STEP	INSPECTION		ACTION
1	**VERIFY FREEZE FRAME DATA AND DIAGNOSTIC MONITORING TEST RESULTS HAVE BEEN RECORDED** • Have FREEZE FRAME DATA and DIAGNOSTIC MONITORING TEST RESULTS (HO2S related) been recorded?	Yes	Go to the next step.
		No	Record the FREEZE FRAME DATA and DIAGNOSTIC MONITORING TEST RESULTS on repair order, then go to the next step.
2	**VERIFY RELATED SERVICE INFORMATION AVAILABILITY** • Verify related service bulletins and/or repair Information availability. • Is any related Service Information available?	Yes	Perform repair or diagnosis according to available Service Information. • If the vehicle is not repaired, go to the next step.
		No	Go to the next step.
3	**VERIFY RELATED PENDING OR STORED DTC** • Turn the ignition switch off, then to the ON position. (Engine off) • Verify pending code or stored DTCs using the WDS or equivalent. • Is other DTC present?	Yes	Go to the appropriate DTC troubleshooting procedures. (See 01–02A–18 DTC TABLE [L3].)
		No	Go to the next step.
4	**IDENTIFY TRIGGER DTC FOR FREEZE FRAME DATA** • Is DTC P0138 on FREEZE FRAME DATA?	Yes	Go to the next step.
		No	Go to troubleshooting procedures for DTC on FREEZE FRAME DATA. (See 01–02A–18 DTC TABLE [L3].)
5	**INSPECT MIDDLE*1 /REAR*2 HO2S SIGNAL CIRCUIT FOR SHORT TO POWER SUPPLY** • Turn the ignition switch off. • Disconnect middle*1/rear*2 HO2S connector. • Turn the ignition switch to the ON position. (Engine off) • Measure the voltage between middle*1/rear*2 HO2S terminal A (wiring harness-side) and body ground. • Is there any voltage?	Yes	Replace short to power supply, then go to Step 7.
		No	Go to the next step.
6	**VERIFY CURRENT INPUT SIGNAL STATUS** • Start engine. • Access O2S12 PID using the WDS or equivalent. • Verify PID while racing engine at least **10 times** in PARK (ATX) or NEUTRAL (MTX). • Does PID stay **above 0.55 V?**	Yes	Replace sensor, then go to the next step. (See 01–15A–2 EXHAUST SYSTEM REMOVAL/ INSTALLATION [L3].)
		No	Go to the next step.
7	**VERIFY TROUBLESHOOTING OF DTC P0138 COMPLETED** • Make sure to reconnect all disconnected connectors. • Turn the ignition switch to the ON position. (Engine off) • Clear the DTC from the memory using the WDS or equivalent. • Run the PCM adaptive memory procedure drive mode and HO2S heater, HO2S, and TWC repair verification drive mode. (See 01–02A–13 OBD-II DRIVE MODE [L3].) • Is the PENDING CODE for this DTC present?	Yes	Replace the PCM, then go to the next step. (See 01–40A–9 PCM REMOVAL/INSTALLATION [L3].)
		No	Go to the next step.
8	**VERIFY AFTER REPAIR PROCEDURE** • Perform the "AFTER REPAIR PROCEDURE". (See 01–02A–12 AFTER REPAIR PROCEDURE [L3].) • Are any DTC present?	Yes	Go to the applicable DTC troubleshooting. (See 01–02A–18 DTC TABLE [L3].)
		No	Troubleshooting completed.

*1 : California emission regulation applicable ATX model
*2 : Except for California emission regulation applicable ATX model

DTC P0139 [L3]

E6U010200100W22

California Emission Regulation Applicable ATX Model

DTC P0139	Middle HO2S circuit problem
DETECTION CONDITION	• The PCM monitors inversion cycle period, middle HO2S output voltage inclination. The PCM detects that the voltage inclinations are below threshold consecutive **5 times** when following conditions are met, or **0.3 V or more** is detected **three times** even though fuel cut is performed for **3 s or more**, the PCM determines that circuit has malfunction. **MONITORING CONDITIONS** — HO2S heater, HO2S, and TWC Repair Verification Drive Mode — Following conditions are met: • Engine speed is **500 rpm or above**. • Engine coolant temperature is **above 70 °C {158 °F}**. **Diagnostic support note** • This is an intermittent monitor. (HO2S) • MIL illuminates if PCM detects above malfunction condition in two consecutive drive cycles or in one drive cycle while DTC for the same malfunction has been stored in PCM. • DIAGNOSTIC MONITORING TEST RESULTS is available. • PENDING CODE is available if PCM detects the above malfunction condition during first drive cycle. • FREEZE FRAME DATA is available. • DTC is stored in the PCM memory.
POSSIBLE CAUSE	• Middle HO2S deterioration • Middle HO2S malfunction • Looseness middle HO2S • Pressure regulator (built-in fuel pump unit) malfunction • Fuel pump malfunction • Fuel filter (built-in fuel pump unit) clogged or restricted • Fuel leakage on fuel line from fuel distribution pipe and fuel pump • Leakage exhaust system • Purge solenoid valve malfunction • Purge solenoid hoses improper connection • Insufficient compression • Engine malfunction (Leakage engine coolant)

01–02A

Diagnostic procedure

STEP	INSPECTION		ACTION
1	**VERIFY FREEZE FRAME DATA AND DIAGNOSTIC MONITORING TEST RESULTS HAVE BEEN RECORDED** • Have FREEZE FRAME DATA and DIAGNOSTIC MONITORING TEST RESULTS (HO2S related) been recorded?	Yes	Go to the next step.
		No	Record the FREEZE FRAME DATA and DIAGNOSTIC MONITORING TEST RESULTS on repair order, then go to the next step.
2	**VERIFY RELATED REPAIR INFORMATION AVAILABILITY** • Verify related Service Bulletins and/or-line repair information availability. • Is any related repair information available?	Yes	Perform repair or diagnosis according to the available Service Information. • If the vehicle is not repaired, go to the next step.
		No	Go to the next step.
3	**VERIFY RELATED PENDING AND STORED DTC** • Turn the ignition switch off, then to the ON position (Engine off). • Verify pending and /or stored DTCs using the WDS or equivalent. • Is DTC P0443 also present?	Yes	Go to DTC P0443 troubleshooting procedures, then go to Step 13.
		No	Go to the next step.
4	**IDENTIFY TRIGGER DTC FOR FREEZE FRAME DATA** • Is DTC P0139 on FREEZE FRAME DATA?	Yes	Go to the next step.
		No	Go to troubleshooting procedures for DTC on FREEZE FRAME DATA. (See 01–02A–18 DTC TABLE [L3].)

STEP	INSPECTION		ACTION
5	**VERIFY CURRENT INPUT SIGNAL STATUS** • Warm up the engine. • Access O2S12 PID using the WDS or equivalent. • Inspect PID under following accelerator pedal conditions in PARK. • Is PID normal? — **More than 0.55 V** when suddenly depress accelerator pedal (rich condition). — **Less than 0.55 V** just after release of accelerator pedal (lean condition).	Yes	Go to step 8.
		No	Go to the next step.
6	**INSPECT INSTALLATION OF MIDDLE HO2S** • Inspect if the middle HO2S is loosely installed. • Is the sensor installed securely?	Yes	Go to the next step.
		No	Retighten the sensor, then go to Step 13.
7	**INSPECT GAS LEAKAGE FROM EXHAUST SYSTEM** • Visually inspect if there is any gas leakage is found between the exhaust manifold and middle HO2S. • Is there gas leakage?	Yes	Repair or replace malfunctioning faulty exhaust part, then go to Step 13.
		No	Replace sensor, then go to Step 13.
8	**INSPECT LONG TERM FUEL TRIM** • Access LONGFT1 PIDs • Compare it with FREEZE FRAME DATA recorded at Step 1. • Is it below FFD value?	Yes	Engine is driven under rich condition. Go to the next step.
		No	Engine is driven under lean condition. Go to step 10.
9	**INSPECT FUEL LINE PRESSURE (Excessive fuel line pressure)** • Turn the ignition switch off. • Inspect fuel line pressure while the engine running. (See 01–14A–7 FUEL LINE PRESSURE INSPECTION [L3, AJ].) • Is the fuel line pressure normal?	Yes	Go to step 12.
		No	Inspect fuel pump maximum pressure and fuel return pipe for clogging. (See 01–14A–21 FUEL PUMP UNIT INSPECTION [L3, AJ].) • If there is any problem, repair or replace the parts. • If all items above are normal, replace fuel pump unit. Then go to Step 13.
10	**INSPECT FUEL LINE PRESSURE (Low fuel line pressure)** • Turn the ignition switch off. • Inspect fuel line pressure while the engine running. (See 01–14A–7 FUEL LINE PRESSURE INSPECTION [L3, AJ].) • Is fuel line pressure normal?	Yes	Go to step 12.
		No	Go to the next step.
11	**INSPECT FUEL LINE FROM FUEL PUMP TO FUEL DELIVERY PIPE** • Visually inspect the fuel line for any leakage. • Is there fuel leakage?	Yes	Replace the fuel line, then go to Step 13.
		No	Inspect the fuel filters for the following: • Foreign materials or stain inside fuel filter (low-pressure side) Perform the following actions according to the result. • If foreign material or stain is found inside fuel filter (low-pressure side), clean the fuel tank and filter. • If normal, replace fuel pump unit. Then go to Step 13.
12	**INSPECT SEALING OF ENGINE COOLANT PASSAGE** • Perform "ENGINE COOLANT LEAKAGE INSPECTION." (See 01–12A–7 ENGINE COOLANT LEAKAGE INSPECTION [L3, AJ].) • Is there any malfunction?	Yes	Go to the next step.
		No	Repair or replace the malfunctioning part according to inspection results. Then go to the next step.

STEP	INSPECTION		ACTION
13	**VERIFY TROUBLESHOOTING OF DTC P0139 COMPLETED** • Make sure to reconnect all disconnected connectors. • Turn the ignition switch to the ON position. (Engine off) • Clear the DTC from the memory using the WDS or equivalent. • Perform the "PCM Adaptive Memory Produce Drive Mode" and "HO2S heater, HO2S, and TWC Repair Verification Drive Mode". (See 01–02A–13 OBD-II DRIVE MODE [L3].) • Is the PENDING CODE for this DTC present?	Yes	Replace the PCM, then go to the next step. (See 01–40A–9 PCM REMOVAL/INSTALLATION [L3].)
		No	Go to the next step.
14	**VERIFY AFTER REPAIR PROCEDURE** • Perform the "AFTER REPAIR PROCEDURE". (See 01–02A–12 AFTER REPAIR PROCEDURE [L3].) • Are any DTC present?	Yes	Go to the applicable DTC troubleshooting. (See 01–02A–18 DTC TABLE [L3].)
		No	Troubleshooting completed.

Except for California Emission Regulation Applicable ATX Model

DTC P0139	Rear HO2S circuit problem
DETECTION CONDITION	• The PCM monitors the rich (**0.4 V**) to lean (**0.3 V**) response time of the rear HO2S. The PCM measure the response time when the following conditions are met. The PCM determines the rear HO2S response deterioration malfunction when the measured response time is more than the threshold value (**80 ms**) five consecutive times. **MONITORING CONDITIONS** — HO2S heater, HO2S, and TWC Repair Verification Drive Mode or EGR, HO2S heater, HO2S, TWC, and EVAP System Repair Verification Drive Mode — Following conditions are met: • Fuel cut during deceleration • Engine speed is **above 500 rpm**. • Engine coolant temperature is **above 70 °C {158 °F}**. • HO2S (rear) output voltage is **above 0.4 V**. • The PCM monitors for a time-out malfunction (when rear HO2S remains above 0.3 V for longer than a specified period of time during fuel cut control). The PCM measure the amount of time from when the following conditions are met until the rear HO2S output voltage drops **below 0.3 V**. The PCM determines a HO2S time-out malfunction when the detected time is more than the threshold value (**6 s**) three consecutive times. **MONITORING CONDITIONS** — HO2S heater, HO2S, and TWC Repair Verification Drive Mode or EGR, HO2S heater, HO2S, TWC, and EVAP System Repair Verification Drive Mode — Following conditions are met: • Fuel cut during deceleration • Engine speed is **above 500 rpm**. • Engine coolant temperature is **above 70 °C {158 °F}**. • HO2S (rear) is activated (**more than 0.55 V**). **Diagnostic support note** • This is an intermittent monitor. (HO2S) • The MIL illuminates if the PCM detects the above malfunction condition in two consecutive drive cycles or in one drive cycle while the DTC for the same malfunction has been stored in the PCM. • DIAGNOSTIC MONITORING TEST RESULTS is available. • PENDING CODE is available if the PCM detects the above malfunction condition during first drive cycle. • FREEZE FRAME DATA is available. • DTC is stored in the PCM memory.
POSSIBLE CAUSE	• Rear HO2S deterioration • Rear HO2S malfunction • Looseness rear HO2S • Pressure regulator (built-in fuel pump unit) malfunction • Fuel pump malfunction • Fuel filter (built-in fuel pump unit) clogged or restricted • Fuel leakage on fuel line from fuel distribution pipe and fuel pump • Leakage exhaust system • Purge solenoid valve malfunction • Purge solenoid hoses improper connection • Insufficient compression • Engine malfunction (Leakage engine coolant)

Diagnostic procedure

STEP	INSPECTION		ACTION
1	**VERIFY FREEZE FRAME DATA AND DIAGNOSTIC MONITORING TEST RESULTS HAVE BEEN RECORDED** • Have FREEZE FRAME DATA and DIAGNOSTIC MONITORING TEST RESULTS (HO2S related) been recorded?	Yes	Go to the next step.
		No	Record the FREEZE FRAME DATA on repair order, then g to the next step.
2	**VERIFY RELATED SERVICE INFORMATION AVAILABILITY** • Verify related Service Information availability. • Is any related Service Information available?	Yes	Perform repair or diagnosis according to the available Service Information. • If the vehicle is not repaired, go to the next step.
		No	Go to the next step.
3	**VERIFY RELATED PENDING AND STORED DTC** • Turn the ignition switch off, then to the ON position (Engine off). • Verify pending and /or stored DTCs using the WDS or equivalent. • Is DTC P0443 also present?	Yes	Go to DTC P0443 troubleshooting procedures, then go to Step 13.
		No	Go to the next step.
4	**IDENTIFY TRIGGER DTC FOR FREEZE FRAME DATA** • Is DTC P0139 on FREEZE FRAME DATA?	Yes	Go to the next step.
		No	Go to troubleshooting procedures for DTC on FREEZE FRAME DATA. (See 01–02A–18 DTC TABLE [L3].)
5	**VERIFY CURRENT INPUT SIGNAL STATUS** • Warm up the engine. • Access O2S12 PID using the WDS or equivalent. • Inspect PID under following accelerator pedal conditions in PARK (ATX) or NEUTRAL (MTX). • Is PID normal? — **More than 0.55 V** when suddenly depress accelerator pedal (rich condition). — **Less than 0.55 V** just after release of accelerator pedal (lean condition).	Yes	Go to step 8.
		No	Go to the next step.
6	**INSPECT INSTALLATION OF REAR HO2S** • Inspect if the rear HO2S is loosely installed. • Is the sensor installed securely?	Yes	Go to the next step.
		No	Retighten the sensor, then go to Step 13.
7	**INSPECT GAS LEAKAGE FROM EXHAUST SYSTEM** • Visually inspect if there is any gas leakage is found between the exhaust manifold and rear HO2S. • Is there gas leakage?	Yes	Repair or replace malfunctioning faulty exhaust part, then go to Step 13.
		No	Replace sensor, then go to Step 13.
8	**INSPECT LONG TERM FUEL TRIM** • Access LONGFT1 PIDs • Compare it with FREEZE FRAME DATA recorded at Step 1. • Is it below FFD value?	Yes	Engine is driven under rich condition. Go to the next step.
		No	Engine is driven under lean condition. Go to step 10.
9	**INSPECT FUEL LINE PRESSURE (Excessive fuel line pressure)** • Turn the ignition switch off. • Inspect fuel line pressure while the engine running. (See 01–14A–7 FUEL LINE PRESSURE INSPECTION [L3, AJ].) • Is the fuel line pressure normal?	Yes	Go to step 12.
		No	Inspect fuel pump maximum pressure and fuel return pipe for clogging. (See 01–14A–21 FUEL PUMP UNIT INSPECTION [L3, AJ].) • If there is any problem, repair or replace the parts. • If all items above are normal, replace fuel pump unit. Then go to Step 13.
10	**INSPECT FUEL LINE PRESSURE (Low fuel line pressure)** • Turn the ignition switch off. • Inspect fuel line pressure while the engine running. (See 01–14A–7 FUEL LINE PRESSURE INSPECTION [L3, AJ].) • Is fuel line pressure normal?	Yes	Go to step 12.
		No	Go to the next step.

STEP	INSPECTION		ACTION
11	**INSPECT FUEL LINE FROM FUEL PUMP TO FUEL DELIVERY PIPE** • Visually inspect the fuel line for any leakage. • Is there fuel leakage?	Yes	Replace the fuel line, then go to Step 13.
		No	Inspect the fuel filters for the following: • Foreign materials or stain inside fuel filter (low-pressure side) Perform the following actions according to the result. • If foreign material or stain is found inside fuel filter (low-pressure side), clean the fuel tank and filter. • If normal, replace fuel pump unit. Then go to Step 13.
12	**INSPECT SEALING OF ENGINE COOLANT PASSAGE** • Perform "ENGINE COOLANT LEAKAGE INSPECTION." (See 01–12A–7 ENGINE COOLANT LEAKAGE INSPECTION [L3, AJ].) • Is there any malfunction?	Yes	Go to the next step.
		No	Repair or replace the malfunctioning part according to inspection results. Then go to the next step.
13	**VERIFY TROUBLESHOOTING OF DTC P0139 COMPLETED** • Make sure to reconnect all disconnected connectors. • Turn the ignition switch to the ON position. (Engine off) • Clear the DTC from the memory using the WDS or equivalent. • Perform the "PCM Adaptive Memory Produce Drive Mode" and "HO2S heater, HO2S, and TWC Repair Verification Drive Mode". (See 01–02A–13 OBD-II DRIVE MODE [L3].) • Is the PENDING CODE for this DTC present?	Yes	Replace the PCM, then go to the next step. (See 01–40A–9 PCM REMOVAL/INSTALLATION [L3].)
		No	Go to the next step.
14	**VERIFY AFTER REPAIR PROCEDURE** • Perform the "AFTER REPAIR PROCEDURE". (See 01–02A–12 AFTER REPAIR PROCEDURE [L3].) • Are any DTC present?	Yes	Go to the applicable DTC troubleshooting. (See 01–02A–18 DTC TABLE [L3].)
		No	Troubleshooting completed.

DTC P0140 [L3]

E6U010200100W23

DTC P0140	Rear HO2S circuit no activity detected
DETECTION CONDITION	• The PCM monitors the input voltage from the rear HO2S when the following conditions are met. Under the following monitoring conditions, if the input voltage from the rear HO2S does not even **exceed 0.55 V** though the short term fuel trim is controlled up to **25%** for **9.6 s**, the PCM determines that sensor circuit is not activated. **MONITORING CONDITIONS** — HO2S, HO2S heater and TWC repair verification drive mode — Following conditions are met for **above 20.8 s** • Engine speed is **above 1,500 rpm**. • Engine coolant temperature is **above 70 °C {158 °F}**. — Rear HO2S voltage is **above 0.1 V** **Diagnostic support note** • This is an intermittent monitor (HO2S). • MIL illuminates if PCM detects above malfunction condition in two consecutive drive cycles or in one drive cycle while DTC for the same malfunction has been stored in PCM. • PENDING CODE is available if PCM detects the above malfunction condition during first drive cycle. • FREEZE FRAME DATA is available. • DTC is stored in the PCM memory.
POSSIBLE CAUSE	• Rear HO2S deterioration • Rear HO2S heater malfunction • Exhaust system leakage • Open or short to ground circuit between rear HO2S terminal A and PCM terminal 2Q • Insufficient compression • Engine malfunction

DTC P0140	Rear HO2S circuit no activity detected

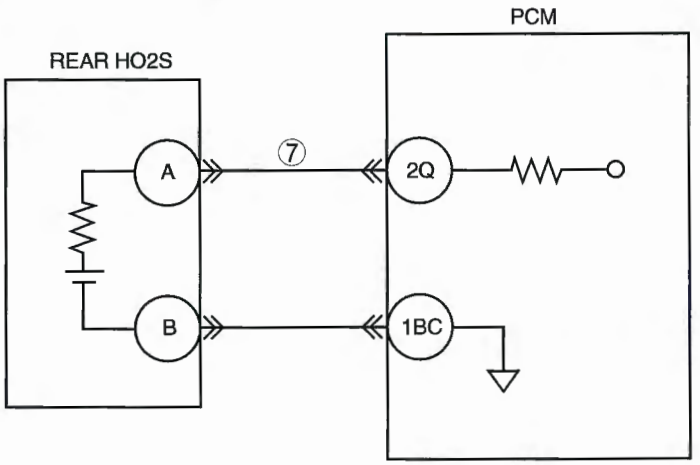

REAR HO2S
HARNESS SIDE CONNECTOR

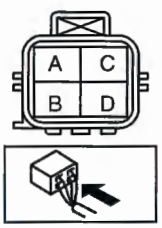

PCM
HARNESS SIDE CONNECTOR

1BE	1BA	1AW	1AS	1AO	1AK	1AG	1AC	1Y	1U	1Q	1M	1I	1E	1A
1BF	1BB	1AX	1AT	1AP	1AL	1AH	1AD	1Z	1V	1R	1N	1J	1F	1B
1BG	1BC	1AY	1AU	1AQ	1AM	1AI	1AE	1AA	1W	1S	1O	1K	1G	1C
1BH	1BD	1AZ	1AV	1AR	1AN	1AJ	1AF	1AB	1X	1T	1P	1L	1H	1D

2BE	2BA	2AW	2AS	2AO	2AK	2AG	2AC	2Y	2U	2Q	2M	2I	2E	2A
2BF	2BB	2AX	2AT	2AP	2AL	2AH	2AD	2Z	2V	2R	2N	2J	2F	2B
2BG	2BC	2AY	2AU	2AQ	2AM	2AI	2AE	2AA	2W	2S	2O	2K	2G	2C
2BH	2BD	2AZ	2AV	2AR	2AN	2AJ	2AF	2AB	2X	2T	2P	2L	2H	2D

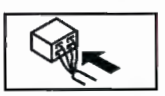

Diagnostic procedure

STEP	INSPECTION		ACTION
1	**VERIFY FREEZE FRAME DATA AND DIAGNOSTIC MONITORING TEST RESULTS HAVE BEEN RECORDED** • Have FREEZE FRAME DATA and DIAGNOSTIC MONITORING TEST RESULTS (HO2S related) been recorded?	Yes	Go to the next step.
		No	Record FREEZE FRAME DATA and DIAGNOSTIC MONITORING TEST RESULTS on repair order, then go to the next step.
2	**VERIFY RELATED REPAIR INFORMATION AVAILABILITY** • Check for related Service Bulletins and/or on-line repair information availability. • Is any related repair information available?	Yes	Perform repair or diagnosis according to the available repair information. • If the vehicle is not repaired, go to the next step.
		No	Go to the next step.
3	**VERIFY RELATED PENDING AND STORED DTCS** **Note** • If fuel monitor DTC, DTC P0131or P0132 is retrieved, ignore it until P0140 is fixed. • Turn ignition switch to OFF, then ON (Engine off). • Verify pending and stored DTCs using the WDS or equivalent. • Is other DTC present?	Yes	Go to appropriate DTC troubleshooting procedures. (See 01–02A–18 DTC TABLE [L3].)
		No	Go to the next step.

STEP	INSPECTION		ACTION
4	**IDENTIFY TRIGGER DTC FOR FREEZE FRAME DATA** • Is DTC P0140 on FREEZE FRAME DATA?	Yes	Go to the next step.
		No	Go to troubleshooting procedures for DTC on FREEZE FRAME DATA. (See 01–02A–18 DTC TABLE [L3].)
5	**VERIFY CURRENT INPUT SIGNAL STATUS** • Warm up engine. • Access O2S12 for P0140 or O2S22 for P0160 PID using the WDS or equivalent. • Verify PID while racing engine at least **10 times** (in NEUTRAL (MTX) or PARK (ATX)). • Is PID reading normal? — **More than 0.55 V** at least once during engine racing.	Yes	Go to step 8.
		No	Go to the next step.
6	**INSPECT INSTALLATION OF REAR HO2S** • Check if rear HO2S is loosely installed. • Is sensor installed securely?	Yes	Go to the next step.
		No	Install sensor securely, then go to Step10.
7	**INSPECT GAS LEAKAGE FROM EXHAUST SYSTEM** • Visually check if any gas leakage is found between exhaust pipe and rear HO2S. • Is there gas leakage?	Yes	Repair or replace any malfunctioning exhaust parts, then go to Step 10.
		No	• Inspect the following harnesses for open or short to ground circuit, repair or replace harness if necessary. — Rear HO2S terminal A (wiring harness-side) to PCM terminal 2Q (wiring harness-side) • Repair or replace harness if necessary. • If all items above are normal, replace faulty sensor. Then go to Step 10.
8	**INSPECT SEALING OF ENGINE COOLANT PASSAGE** • Perform "ENGINE COOLANT LEAKAGE INSPECTION." (See 01–12A–7 ENGINE COOLANT LEAKAGE INSPECTION [L3, AJ].) • Is there any malfunction?	Yes	Go to the next step.
		No	Repair or replace the malfunctioning part according to inspection results. Then go to the Step 10.
9	**INSPECT ENGINE COMPRESSION** • Inspect engine compression. (See 01–10A–4 COMPRESSION INSPECTION [L3].) • Is it normal?	Yes	Go to the next step.
		No	Implement engine overhaul for repairs, then go to the next step.
10	**VERIFY TROUBLESHOOTING OF DTC P0140 COMPLETED** • Make sure to reconnect all disconnected connectors. • Clear the DTC from the PCM memory using the WDS or equivalent. • Turn the ignition switch off. • Start engine and warm it up completely. • Is PENDING CODE for this DTC present?	Yes	Replace PCM, then go to the next step. (See 01–40A–9 PCM REMOVAL/INSTALLATION [L3].)
		No	Go to the next step.
11	**VERIFY AFTER REPAIR PROCEDURE** • Perform the "After Repair Procedure". (See 01–02A–12 AFTER REPAIR PROCEDURE [L3].) • Is any DTC present?	Yes	Go to the applicable DTC inspection. (See 01–02A–18 DTC TABLE [L3].)
		No	Troubleshooting completed.

DTC P0144 [L3]

E6U010200100W24

DTC P0144	Rear HO2S circuit high input
DETECTION CONDITION	• The PCM monitors input voltage from rear HO2S. If the input voltage from the rear HO2S sensor is **above 1.2 V** for **0.5 s**, the PCM determines that circuit input is high. **Diagnostic support note** • This is an continuous monitor (HO2S). • MIL illuminates if PCM detects above malfunction condition in two consecutive drive cycles or in one drive cycle while DTC for the same malfunction has been stored in PCM. • PENDING CODE is available if PCM detects the above malfunction condition during first drive cycle. • FREEZE FRAME DATA is available. • DTC is stored in the PCM memory.
POSSIBLE CAUSE	• Rear HO2S malfunction • Short to power supply in wiring harness between rear HO2S terminal A and PCM terminal 2Q • Rear HO2S or PCM terminal shorted • PCM malfunction

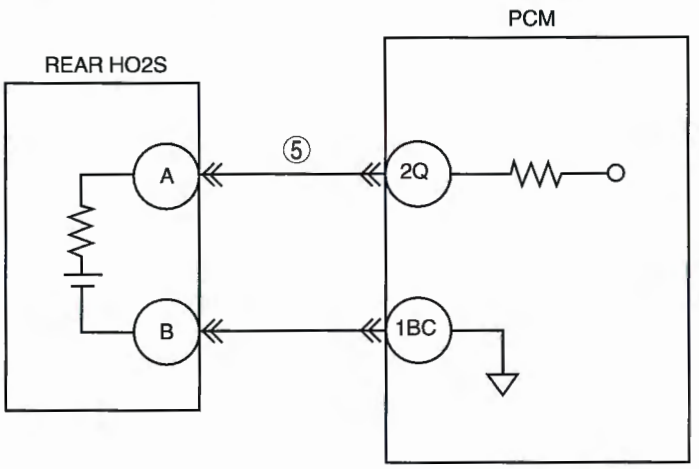

REAR HO2S
HARNESS SIDE CONNECTOR

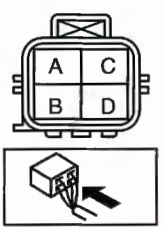

PCM
HARNESS SIDE CONNECTOR

1BE	1BA	1AW	1AS	1AO	1AK	1AG	1AC	1Y	1U	1Q	1M	1I	1E	1A
1BF	1BB	1AX	1AT	1AP	1AL	1AH	1AD	1Z	1V	1R	1N	1J	1F	1B
1BG	1BC	1AY	1AU	1AQ	1AM	1AI	1AE	1AA	1W	1S	1O	1K	1G	1C
1BH	1BD	1AZ	1AV	1AR	1AN	1AJ	1AF	1AB	1X	1T	1P	1L	1H	1D

2BE	2BA	2AW	2AS	2AO	2AK	2AG	2AC	2Y	2U	2Q	2M	2I	2E	2A
2BF	2BB	2AX	2AT	2AP	2AL	2AH	2AD	2Z	2V	2R	2N	2J	2F	2B
2BG	2BC	2AY	2AU	2AQ	2AM	2AI	2AE	2AA	2W	2S	2O	2K	2G	2C
2BH	2BD	2AZ	2AV	2AR	2AN	2AJ	2AF	2AB	2X	2T	2P	2L	2H	2D

Diagnostic procedure

STEP	INSPECTION		ACTION
1	**VERIFY FREEZE FRAME DATA AND DIAGNOSTIC MONITORING TEST RESULTS HAVE BEEN RECORDED** • Have FREEZE FRAME DATA and DIAGNOSTIC MONITORING TEST RESULTS (HO2S related) been recorded?	Yes	Go to the next step.
		No	Record the FREEZE FRAME DATA and DIAGNOSTIC MONITORING TEST RESULTS on repair order, then go to the next step.
2	**VERIFY RELATED SERVICE INFORMATION AVAILABILITY** • Verify related Service Bulletins and/or repair Information availability. • Is any related repair Information available?	Yes	Perform repair or diagnosis according to available Service Information. • If the vehicle is not repaired, go to the next step.
		No	Go to the next step.
3	**VERIFY RELATED PENDING OR STORED DTC** • Turn the ignition switch off, then to the ON position (Engine off). • Verify pending code or stored DTCs using the WDS or equivalent. • Is other DTC present?	Yes	Go to the appropriate DTC troubleshooting procedures. (See 01–02A–18 DTC TABLE [L3].)
		No	Go to the next step.
4	**IDENTIFY TRIGGER DTC FOR FREEZE FRAME DATA** • Is DTC P0144 on FREEZE FRAME DATA?	Yes	Go to the next step.
		No	Go to troubleshooting procedures for DTC on FREEZE FRAME DATA. (See 01–02A–18 DTC TABLE [L3].)
5	**INSPECT REAR HO2S SIGNAL CIRCUIT FOR SHORT TO POWER SUPPLY** • Turn the ignition switch off. • Disconnect rear HO2S connector. • Turn the ignition switch to the ON position. (Engine off) • Measure the voltage between rear HO2S terminal A (wiring harness-side) and body ground. • Is any voltage reading?	Yes	Replace short to power supply, then go to Step 7.
		No	Go to the next step.
6	**VERIFY CURRENT INPUT SIGNAL STATUS** • Start engine. • Access O2S13 PID using the WDS or equivalent. • Verify PID while racing engine at least **10 times** in PARK. • Does PID stay **above 0.55 V**?	Yes	Repair or replace sensor, then go to the next step.
		No	Go to the next step.
7	**VERIFY TROUBLESHOOTING OF DTC P0144 COMPLETED** • Make sure to reconnect all disconnected connectors. • Turn the ignition switch to the ON position. (Engine off) • Clear the DTC from the memory using the WDS or equivalent. • Run the PCM adaptive memory procedure drive mode and HO2S heater, HO2S, and TWC Repair Verification Drive Mode. (See 01–02A–13 OBD-II DRIVE MODE [L3].) • Is the PENDING CODE for this DTC present?	Yes	Replace the PCM, then go to the next step. (See 01–40A–9 PCM REMOVAL/INSTALLATION [L3].)
		No	Go to the next step.
8	**VERIFY AFTER REPAIR PROCEDURE** • Perform the "AFTER REPAIR PROCEDURE". (See 01–02A–12 AFTER REPAIR PROCEDURE [L3].) • Are any DTC present?	Yes	Go to the applicable DTC troubleshooting. (See 01–02A–18 DTC TABLE [L3].)
		No	Troubleshooting completed.

DTC P0171 [L3]

E6U010200100W25

DTC P0171	Fuel trim system too lean
DETECTION CONDITION	• PCM monitors short term fuel trim (SHRTFT) and long term fuel trim (LONGFT) values when closed loop fuel control. If the LONGFT and the sum total of these fuel trims exceed preprogrammed criteria, PCM determines that the fuel system is too lean. **Diagnostic support note** • This is a continuous monitor. (Fuel system) • MIL illuminates if PCM detects above malfunction condition in two consecutive drive cycles or in one drive cycle while DTC for the same malfunction has been stored in PCM. • PENDING CODE is available if PCM detects the above malfunction condition during first drive cycle. • FREEZE FRAME DATA is available. • DTC is stored in the PCM memory.
POSSIBLE CAUSE	• Misfire • Front HO2S deterioration • Front HO2S heater malfunction • MAF sensor malfunction • Pressure regulator malfunction • Fuel pump malfunction • Fuel filter clogged or restricted • Fuel leakage on fuel line from fuel delivery pipe and fuel pump • Fuel return hose clogged • Leakage exhaust system • Purge solenoid valve malfunction • Purge solenoid hoses improper connection • Insufficient compression • Variable valve timing control system improper operation • Air suction in intake-air system malfunction • PCM malfunction

Diagnostic procedure

STEP	INSPECTION		ACTION
1	**VERIFY FREEZE FRAME DATA AND DIAGNOSTIC MONITORING TEST RESULTS HAVE BEEN RECORDED** • Have FREEZE FRAME DATA and DIAGNOSTIC MONITORING TEST RESULTS (Fuel system related) been recorded?	Yes	Go to the next step.
		No	Record FREEZE FRAME DATA and DIAGNOSTIC MONITORING TEST RESULTS on repair order, then go to the next step.
2	**VERIFY RELATED REPAIR INFORMATION AVAILABILITY** • Check for related Service Bulletins and/or on-line repair information availability. • Is any related repair information available?	Yes	Perform repair or diagnosis according to the available repair information. • If the vehicle is not repaired, go to the next step.
		No	Go to the next step.
3	**VERIFY RELATED PENDING CODE OR STORED DTCS** • Turn the ignition switch off, then to the ON position (Engine off). • Verify related PENDING CODE or stored DTCs. • Is other DTCs present?	Yes	If misfire DTC is present, go to Step 8. If other DTC is present, go to appropriate DTC troubleshooting procedures. (See 01–02A–18 DTC TABLE [L3].)
		No	If drive ability concern is present, go to Step 8. If not, go to the next step.
4	**IDENTIFY TRIGGER DTC FOR FREEZE FRAME DATA** • Is DTC P0171 on FREEZE FRAME DATA?	Yes	Go to the next step.
		No	Go to troubleshooting procedures for DTC on FREEZE FRAME DATA.
5	**VERIFY CURRENT INPUT SIGNAL STATUS (ignition switch TO ON/IDLE)** • Access APP1, APP2, ECT, MAF, TP and VSS PIDs using the WDS or equivalent. (See 01–40A–9 PCM INSPECTION [L3].) • Is there any signal that is far out of specification when ignition switch is ON and engine runs?	Yes	Inspect suspected sensor and excessive resistance in related wiring harnesses. Repair or replace if necessary. Then go to Step 17.
		No	Go to the next step.
6	**VERIFY CURRENT INPUT SIGNAL STATUS UNDER TROUBLE CONDITION** • Inspect same PIDs as Step 5 while simulating FREEZE FRAME DATA condition. • Is there any input signal which causes drastic changes?	Yes	Inspect suspected sensor and related wiring harnesses, and repair or replace it. Then go to Step 17.
		No	Go to the next step.

STEP	INSPECTION		ACTION
7	**VERIFY CURRENT INPUT SIGNAL STATUS OF FRONT HO2S** • Access O2S11 for P0171 PID using the WDS or equivalent. • Check PID under following accelerator pedal condition (in PARK). • Is PID reading normal? — **Less than 1 mA** when accelerator pedal is suddenly depress (rich condition) — **More than 1 mA** just after release of accelerator pedal (lean condition)	Yes	Inspect for air suction at followings due to cracks, damages and loosening parts: • From air cleaner to throttle body • From throttle body to dynamic chamber • From dynamic chamber to intake manifold • Vacuum hoses **Note** • Engine speed may change when rust penetrating agent is sprayed on the air suction area. Repair or replace any faulty part, then go to Step 17.
		No	Visually inspect for any gas leakage between exhaust manifold and front HO2S. • If there is no leakage, replace FRONT HO2S. Then go to Step 17.
8	**INSPECT MAF PID** • Start engine. • Access MAF PID using the WDS or equivalent. • Verify that MAF PID changes quickly according to race engine RPM. • Is MAF PID response normal?	Yes	Go to the next step.
		No	Replace Mass air flow sensor, then go to Step 17.
9	**INSPECT FOR EXCESSIVE AIR SUCTION OF INTAKE AIR SYSTEM** • Visually inspect for loosen, cracks or damages hoses on intake air system. • Is there any malfunction?	Yes	Repair or replace source of air suction, then go to Step 17.
		No	Go to the next step.
10	**INSPECT FUEL LINE PRESSURE** • Turn the ignition switch off. **Note** • If engine won't start, inspect fuel line pressure with ignition switch ON. • Inspect fuel line pressure while engine running. (See 01–14A–7 FUEL LINE PRESSURE INSPECTION [L3, AJ].) • Is fuel line pressure normal?	Yes	Go to Step 12.
		No	• If fuel line pressure is too high: Replace fuel pump unit, then go to Step 17. • If fuel line pressure is too low: Go to the next step.
11	**INSPECT FUEL LINE FROM FUEL PUMP TO FUEL DELIVERY PIPE** • Visually inspect fuel line for any leakage. • Is fuel leakage found?	Yes	Replace suspected fuel line, then go to Step 17.
		No	Inspect low-pressure side fuel filter for follows: • Foreign materials or stain inside fuel filter Perform following actions as result. • If foreign materials or stain is found inside fuel filter (low-pressure side), clean of fuel tank and filter. • If normal, replace fuel pump unit. Then go to Step 17.
12	**INSPECT IGNITION COIL HARNESSES** • Inspect the ignition coil related harness condition (intermittent open or short) for all cylinders. • Are harness conditions normal?	Yes	Go to the next step.
		No	Repair suspected wiring harnesses, then go to Step 17.
13	**INSPECT IGNITION SYSTEM OPERATION** • Carry out spark test. (See 01–03A–69 Spark Test) • Is strong blue spark visible at each cylinder?	Yes	Go to the next step.
		No	Repair or replace malfunctioning part according to spark test result. Then go to Step 17.
14	**INSPECT ENGINE COMPRESSION** • Inspect engine compression. (See 01–10A–4 COMPRESSION INSPECTION [L3].) • Is it normal?	Yes	Go to the next step.
		No	Implement engine overhaul for repairs, then go to Step 19.

STEP	INSPECTION		ACTION
15	**INSPECT VARIABLE VALVE TIMING CONTROL SYSTEM OPERATION** • Inspect variable valve timing control system operation. (See 01–03A–72 Variable Valve Timing Control System Operation Inspection.) • Does variable valve timing control system work properly?	Yes	Go to the next step.
		No	Repair or replace malfunctioning part according to variable valve timing control system inspection results, then go to Step 17.
16	**INSPECT FUEL INJECTOR OPERATION** • Remove fuel injector. • Inspect injector operation. • Is fuel injector normal?	Yes	Go to the next step.
		No	Replace injector, then go to the next step.
17	**VERIFY TROUBLESHOOTING OF DTC P0171 COMPLETED** • Make sure to reconnect all disconnected connectors. • Clear the DTC from the PCM memory using the WDS or equivalent. • Perform the "PCM Adaptive Memory Produce Drive Mode" and "HO2S heater, HO2S, and TWC Repair Verification Drive Mode". (See 01–02A–13 OBD-II DRIVE MODE [L3].) • Stop vehicle and access ON BOARD READINESS TEST to inspect DRIVE MODE completion status. • Verify FUEL_EVAL PID changes to yes. — If not, perform the "HO2S heater, HO2S, and TWC Repair Verification Drive Mode" again. • Access PENDING CODE. • Is the PENDING CODE for this DTC present?	Yes	Replace PCM, then go to the next step. (See 01–40A–9 PCM REMOVAL/INSTALLATION [L3].)
		No	Go to the next step.
18	**VERIFY AFTER REPAIR PROCEDURE** • Perform "AFTER REPAIR PROCEDURE". (See 01–02A–12 AFTER REPAIR PROCEDURE [L3].) • Are any DTCs present?	Yes	Go to the applicable DTC inspection. (See 01–02A–18 DTC TABLE [L3].)
		No	Troubleshooting completed.

DTC P0172 [L3]

E6U010200100W26

DTC P0172	Fuel trim system too rich
DETECTION CONDITION	• PCM monitors short fuel trim (SHRTFT) and long fuel trim (LONGFT) values when closed loop fuel control. If the LONGFT and the sum total of these fuel trims exceed preprogrammed criteria, PCM determines that the fuel system is too rich. **Diagnostic support note** • This is a continuous monitor. (Fuel system) • MIL illuminates if PCM detects above malfunction condition in two consecutive drive cycles or in one drive cycle while DTC for the same malfunction has been stored in PCM. • PENDING CODE is available if PCM detects the above malfunction condition during first drive cycle. • FREEZE FRAME DATA is available. • DTC is stored in the PCM memory.
POSSIBLE CAUSE	• Misfire • Front HO2S deterioration • Front HO2S heater malfunction • MAF sensor malfunction • EGR valve improper operation • Variable tumble solenoid valve improper operation • Purge solenoid valve improper operation • Pressure regulator malfunction • Fuel pump malfunction • Fuel return hose clogged • Purge solenoid valve malfunction • Purge solenoid hoses improper connection • PCV valve malfunction • PCM malfunction

Diagnostic procedure

STEP	INSPECTION		ACTION
1	**VERIFY FREEZE FRAME DATA AND DIAGNOSTIC MONITORING TEST RESULTS HAVE BEEN RECORDED** • Have FREEZE FRAME DATA and DIAGNOSTIC MONITORING TEST RESULTS (Fuel system related) been recorded?	Yes	Go to the next step.
		No	Record FREEZE FRAME DATA and DIAGNOSTIC MONITORING TEST RESULTS on repair order, then go to the next step.
2	**VERIFY RELATED REPAIR INFORMATION AVAILABILITY** • Check for related Service Bulletins and/or on-line repair information availability. • Is any related repair information available?	Yes	Perform repair or diagnosis according to the available repair information. • If the vehicle is not repaired, go to the next step.
		No	Go to the next step.
3	**VERIFY RELATED PENDING CODE OR STORED DTCS** • Turn the ignition switch off, then to the ON position (Engine off). • Verify related pending code or stored DTCs. • Is other DTCs present?	Yes	Go to appropriate DTC troubleshooting procedures.
		No	If drive ability concern is present, go to Step 9. If not, go to the next step.
4	**IDENTIFY TRIGGER DTC FOR FREEZE FRAME DATA** • Is DTC P0172 on FREEZE FRAME DATA?	Yes	Go to the next step.
		No	Go to troubleshooting procedures for DTC on FREEZE FRAME DATA.
5	**VERIFY CURRENT INPUT SIGNAL STATUS (ignition switch TO ON/IDLE)** • Access APP1, APP2, ECT, MAF, TP and VSS PIDs using the WDS or equivalent. • Is there any signal that is far out of specification when ignition switch is ON and engine runs?	Yes	Inspect the sensor and excessive resistance in related wiring harnesses. Repair or replace if necessary. Then go to Step 11.
		No	Go to the next step.
6	**VERIFY CURRENT INPUT SIGNAL STATUS UNDER TROUBLE CONDITION** • Inspect PID data while simulating FREEZE FRAME DATA condition. • Is there any input signal which causes drastic changes?	Yes	Inspect the sensor and related wiring harnesses, and repair or replace it. Then go to Step 11.
		No	Go to the next step.
7	**VERIFY CURRENT INPUT SIGNAL STATUS OF FRONT HO2S** • Access O2S11 PID using the WDS or equivalent. • Verify PID while racing engine (in PARK). • Is PID reading normal? — **Less than 1 mA** when accelerator pedal is suddenly depress (rich condition) — **More than 1 mA** just after release of accelerator pedal (lean condition)	Yes	Go to the next step.
		No	Replace the front HO2S. Then go to Step 11.
8	**INSPECT FUEL LINE PRESSURE** • Turn the ignition switch off. • Inspect fuel line pressure while engine running. (See 01–14A–7 FUEL LINE PRESSURE INSPECTION [L3, AJ].) • Is fuel line pressure normal?	Yes	Go to the next step.
		No	Replace the fuel pump unit, then go to Step 11.
9	**INSPECT LONG TERM FUEL TRIM** • Turn the ignition switch off. • Disconnect purge hose from intake manifold and plug opening end of hose and intake manifold. • Access LONGFT1 PID. • Does it shift to positive value?	Yes	Inspect the purge solenoid valve. Repair or replace it if necessary, then go to Step 11.
		No	Go to the next step.
10	**INSPECT PCV VALVE OPERATION** • Inspect PCV valve operation. (See 01–16A–23 POSITIVE CRANKCASE VENTILATION (PCV) VALVE INSPECTION [L3].)	Yes	Go to the next step.
		No	Replace the PCV valve, then go to the next step.

STEP	INSPECTION		ACTION
11	**VERIFY TROUBLESHOOTING OF DTC P0172 COMPLETED** • Make sure to reconnect all disconnected connectors. • Clear the DTC from the PCM memory using the WDS or equivalent. • Perform the "HO2S heater, HO2S, and TWC Repair Verification Drive Mode". (See 01–02A–13 OBD-II DRIVE MODE [L3].) • Stop vehicle and access ON BOARD READINESS TEST to inspect DRIVE MODE completion status. • Verify FUEL_EVAL PID changes to yes. — If not, perform the "HO2S heater, HO2S, and TWC Repair Verification Drive Mode" again. • Access PENDING CODE. • Is the PENDING CODE for this DTC present?	Yes	Replace the PCM, then go to the next step. (See 01–40A–9 PCM REMOVAL/INSTALLATION [L3].)
		No	Go to the next step.
12	**VERIFY AFTER REPAIR PROCEDURE** • Perform "AFTER REPAIR PROCEDURE". (See 01–02A–12 AFTER REPAIR PROCEDURE [L3].) • Are any DTCs present?	Yes	Go to the applicable DTC inspection. (See 01–02A–18 DTC TABLE [L3].)
		No	Troubleshooting completed.

DTC P0222 [L3]

E6U010200200W01

DTC P0222	TP sensor No.2 circuit low input
DETECTION CONDITION	• If PCM detects TP sensor No.2 voltage **below 0.05 V*1, 0.2 V*2** after ignition switch to ON, PCM determines that TP circuit has a malfunction. **Diagnostic support note** • This is a continuous monitor (CCM). • MIL illuminates if PCM detects the above malfunction conditions in first drive cycles. • PENDING CODE is available if PCM detects the above malfunction condition. • FREEZE FRAME DATA is available. • DTC is stored in the PCM memory.
POSSIBLE CAUSE	• TP sensor malfunction • Connector or terminal malfunction • Open circuit between throttle body terminal C and PCM terminal 2AL • Short to ground between throttle body terminal C and PCM terminal 2AL • Open circuit between throttle body terminal B and PCM terminal 2AO • Short to ground between throttle body terminal B and PCM terminal 2AO • PCM malfunction

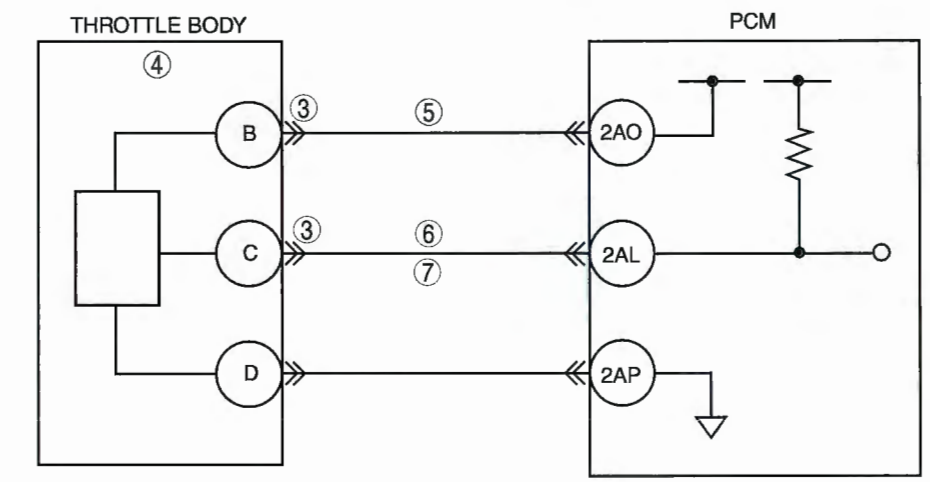

THROTTLE BODY
HARNESS SIDE CONNECTOR

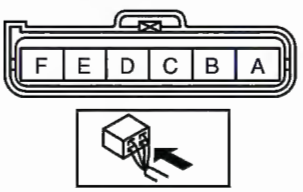

PCM
WIRING HARNESS-SIDE CONNECTOR

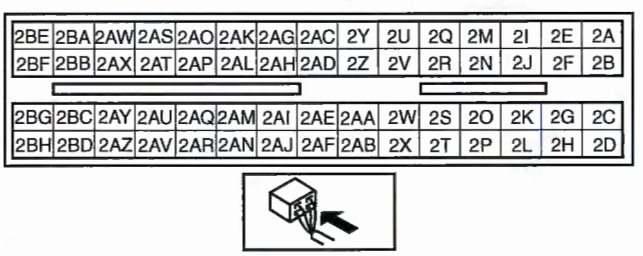

*1 : California emission regulation applicable ATX model
*2 : Except for California emission regulation applicable ATX model

Diagnostic procedure

STEP	INSPECTION		ACTION
1	**VERIFY FREEZE FRAME DATA HAS BEEN RECORDED** • Has FREEZE FRAME DATA been recorded?	Yes	Go to the next step.
		No	Record FREEZE FRAME DATA on repair order, then go to the next step.
2	**VERIFY RELATED REPAIR INFORMATION AVAILABILITY** • Check for related Service Bulletins and/or on-line repair information availability. • Is any related repair information available?	Yes	Perform repair or diagnosis according to the available repair information. • If the vehicle is not repaired, go to the next step.
		No	Go to the next step.
3	**CLASSIFY TP SENSOR OR HARNESS MALFUNCTION** • Connect WDS or equivalent. • Access TP2 PID. • Disconnect throttle body connector. • Connect a jumper wire between throttle body terminals B and C (wiring harness-side). • Is voltage **above 4.9 V**?	Yes	Go to the next step.
		No	Go to step 5.
4	**INSPECT TP SENSOR** • Perform TP sensor inspection. (See 01–40A–30 THROTTLE POSITION (TP) SENSOR INSPECTION [L3].) • Is TP sensor normal?	Yes	Inspect for poor throttle body connector terminal B connection. Repair or replace as necessary, then go to Step 8.
		No	Replace throttle body, then go to Step 8.
5	**INSPECT POWER SUPPLY CIRCUIT VOLTAGE AT THROTTLE BODY CONNECTOR** **Note** • If DTC P0107 and P2228 are also retrieved with P0122, go to CONSTANT VOLTAGE troubleshooting procedure. • Turn ignition switch to ON (Engine off). • Measure voltage at throttle body terminal B (wiring harness-side). • Is voltage **within 4.5—5.5 V**?	Yes	Go to the next step.
		No	Repair or replace open circuit between throttle body connector terminal B and PCM connector terminal 2AO (wiring harness-side). Then, then go to Step 8.
6	**VERIFY TP2 SIGNAL CIRCUIT FOR OPEN CIRCUIT** • Turn the ignition switch off. • Inspect continuity between throttle body terminal C (wiring harness-side) and PCM terminal 2AL • Is there continuity?	Yes	Go to the next step.
		No	Repair or replace suspected harness, then go to Step 8.
7	**VERIFY TP2 SIGNAL CIRCUIT FOR SHORT TO GROUND** • Inspect continuity between throttle body terminal C (wiring harness-side) and body ground. • Is there continuity?	Yes	Repair or replace suspected harness, then go to the next step.
		No	Go to the next step.
8	**VERIFY TROUBLESHOOTING OF DTC P0222 COMPLETED** • Make sure to reconnect all disconnected connectors. • Turn ignition switch to ON (Engine off). • Clear the DTC from the PCM memory using the WDS or equivalent. • Start engine and warm it up completely. • Is same DTC present?	Yes	Replace PCM, then go to the next step. (See 01–40A–9 PCM REMOVAL/INSTALLATION [L3].)
		No	Go to the next step.
9	**VERIFY AFTER REPAIR PROCEDURE** • Perform the "After Repair Procedure". (See 01–02A–12 AFTER REPAIR PROCEDURE [L3].) • Is any DTC present?	Yes	Go to the applicable DTC inspection. (See 01–02A–18 DTC TABLE [L3].)
		No	Troubleshooting completed.

DTC P0223 [L3]

E6U010200200W02

DTC P0223	TP sensor No.2 circuit high input
DETECTION CONDITION	• If PCM detects TP sensor No.2 voltage is **above 4.85 V** after ignition switch to ON, PCM determines that TP circuit has a malfunction. **Diagnostic support note** • This is a continuous monitor (CCM). • MIL illuminates if PCM detects the above malfunction conditions in first drive cycles. • PENDING CODE is available if PCM detects the above malfunction condition. • FREEZE FRAME DATA is available. • DTC is stored in the PCM memory.
POSSIBLE CAUSE	• TP sensor malfunction • Connector or terminal malfunction • Open circuit between throttle body terminal B and PCM terminal 2AO • Open circuit between throttle body terminal D and PCM terminal 2AP • Short to constant voltage supply between throttle body terminal C and PCM terminal 2AL • PCM malfunction

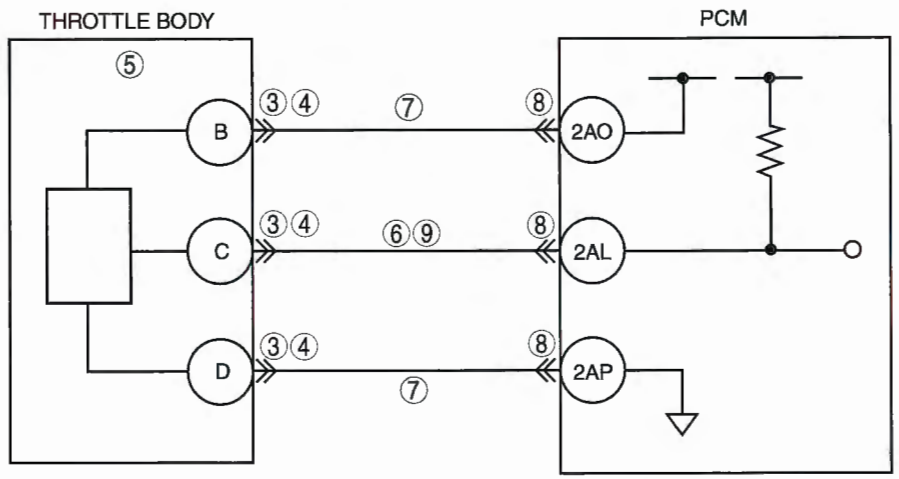

THROTTLE BODY
HARNESS SIDE CONNECTOR

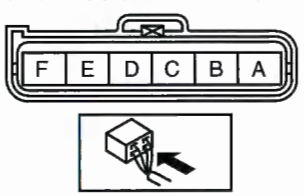

PCM
WIRING HARNESS-SIDE CONNECTOR

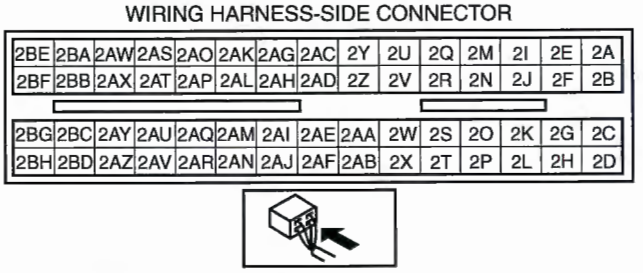

Diagnostic procedure

STEP	INSPECTION		ACTION
1	**VERIFY FREEZE FRAME DATA HAS BEEN RECORDED** • Has FREEZE FRAME DATA been recorded?	Yes	Go to the next step.
		No	Record FREEZE FRAME DATA on repair order, then go to the next step.
2	**VERIFY RELATED REPAIR INFORMATION AVAILABILITY** • Check for related Service Bulletins and/or on-line repair information availability. • Is any related repair information available?	Yes	Perform repair or diagnosis according to the available repair information. • If the vehicle is not repaired, go to the next step.
		No	Go to the next step.
3	**INSPECT THROTTLE BODY CONNECTOR** • Turn the ignition switch off. • Verify that the throttle body connector is connected securely. • Is connector normal?	Yes	Go to the next step.
		No	Connect the connector securely, then go to Step 10.

STEP	INSPECTION		ACTION
4	**INSPECT THROTTLE BODY CONNECTOR FOR POOR CONNECTION** • Disconnect throttle body connector. • Inspect for poor connection (such as damaged/ pulled-out pins, corrosion). • Is there any malfunction?	Yes	Repair or replace suspected terminal, then go to Step 10.
		No	Go to the next step.
5	**INSPECT TP SENSOR** • Perform TP sensor inspection. (See 01–40A–30 THROTTLE POSITION (TP) SENSOR INSPECTION [L3]) • Is TP sensor normal?	Yes	Go to the next step.
		No	Replace throttle body, then go to Step 10.
6	**INSPECT TP2 SIGNAL CIRCUIT FOR SHORT TO POWER SUPPLY** • Turn ignition switch to ON (Engine off). • Measure voltage between throttle body terminal C (wiring harness-side) and body ground. • Is voltage **above 4.9 V**?	Yes	Repair or replace short to power supply. Then, go to Step 10.
		No	Go to the next step.
7	**VERIFY TP SENSOR GROUND CIRCUIT FOR OPEN CIRCUIT** • Inspect continuity between throttle body connector terminal D (wiring harness-side) and PCM terminal 2AP (wiring harness-side). • Inspect continuity between throttle body connector terminal B (wiring harness-side) and PCM terminal 2AO (wiring harness-side). • Is there continuity?	Yes	Repair or replace open circuit between throttle body terminal D (wiring harness-side) and PCM connector terminal 2AP (wiring harness-side). Then, go to Step 10.
		No	Go to the next step.
8	**INSPECT PCM CONNECTOR** • Disconnect PCM connector. • Inspect for poor connection (such as damaged/ pulled-out pins, corrosion). • Is there any malfunction?	Yes	Repair terminal, then go to Step 10.
		No	Go to Step 10.
9	**VERIFY TP SIGNAL CIRCUIT FOR SHORT TO CONSTANT VOLTAGE CIRCUIT** • Inspect continuity between throttle body terminals B and C (wiring harness-side). • Is there continuity?	Yes	Repair or replace suspected harness, then go to the next step.
		No	Go to the next step.
10	**VERIFY TROUBLESHOOTING OF DTC P0223 COMPLETED** • Make sure to reconnect all disconnected connectors. • Turn ignition switch to ON (Engine off). • Clear the DTC from the PCM memory using the WDS or equivalent. • Start engine and warm it up completely. • Is same DTC present?	Yes	Replace PCM, then go to the next step. (See 01–40A–9 PCM REMOVAL/INSTALLATION [L3].)
		No	Go to the next step.
11	**VERIFY AFTER REPAIR PROCEDURE** • Perform the "After Repair Procedure". (See 01–02A–12 AFTER REPAIR PROCEDURE [L3].) • Is any DTC present?	Yes	Go to the applicable DTC inspection. (See 01–02A–18 DTC TABLE [L3].)
		No	Troubleshooting completed.

DTC P0300 [L3]

E6U010200300W01

DTC P0300	Random misfire detection
DETECTION CONDITION	• PCM monitors CKP sensor input signal interval time. PCM calculates the change of the interval time for each cylinder. If the change of interval time exceeds the preprogrammed criteria, PCM detects a misfire in the corresponding cylinder. While the engine is running, PCM counts the number of misfires that occurred at **200 crankshaft revolutions** and **1,000 crankshaft revolutions** and calculates misfire ratio for each crankshaft revolution. If the ratio exceeds the preprogrammed criteria, PCM determines that a misfire, which can damage the catalytic converter or affect emission performance, has occurred. **Diagnostic support note** • This is a continuous monitor (Misfire). • MIL illuminates if PCM detects the misfire which affects emission performance in two consecutive drive cycles or in one drive cycle while DTC for the same malfunction has been stored in PCM. • PENDING CODE is available if PCM detects the misfire which affects emission performance during first drive cycle. • MIL flashes if PCM detects the misfire which can damage the catalytic converter during first drive cycle. • FREEZE FRAME DATA is available. • DTC is stored in the PCM memory.
POSSIBLE CAUSE	• CKP sensor malfunction • CMP sensor malfunction • Ignition coil malfunction • Ignition system malfunction • MAF sensor contamination • Excess air suction in intake air system (between MAF sensor and intake manifold) • Fuel pump malfunction • Fuel pressure regulator malfunction • Clogged fuel line • Clogged fuel filter • Fuel leakage in fuel line • Fuel run-out • Poor quality fuel • Purge control solenoid valve malfunction • PCV valve malfunction • EGR valve malfunction • Vacuum hose damage or improper connection • Related connector and terminal malfunction • Related wiring harness malfunction • Insufficient compression • Variable valve timing control system improper

Diagnostic procedure

STEP	INSPECTION		ACTION
1	**VERIFY FREEZE FRAME DATA AND DIAGNOSTIC MONITORING TEST RESULTS HAVE BEEN RECORDED** • Have FREEZE FRAME DATA and DIAGNOSTIC MONITORING TEST RESULTS (Misfire related) been recorded?	Yes	Go to the next step.
		No	Record FREEZE FRAME DATA and DIAGNOSTIC MONITORING TEST RESULTS on repair order, then go to the next step.
2	**VERIFY RELATED REPAIR INFORMATION AVAILABILITY** • Check for related Service Bulletins and/or on-line repair information availability. • Is any related repair information available?	Yes	Perform repair or diagnosis according to the available repair information. • If the vehicle is not repaired, go to the next step.
		No	Go to the next step.
3	**VERIFY RELATED PENDING CODE OR STORED DTCs** • Turn ignition switch to OFF, then ON (Engine off). • Verify related PENDING CODE or stored DTCs. • Are other DTCs present?	Yes	Go to appropriate DTC troubleshooting. (See 01–02A–18 DTC TABLE [L3].)
		No	Go to the next step.

STEP	INSPECTION		ACTION
4	**VERIFY CURRENT INPUT SIGNAL STATUS (ignition switch TO ON/IDLE)** • Access APP1, APP2, ECT, IAT, MAF, RPM, TP_REL, and VSS PIDs using the WDS or equivalent. (See 01–40A–9 PCM INSPECTION [L3].) • Is there any signal that is far out of specification when ignition switch is ON and engine runs at idle?	Yes	Inspect suspected circuit and/or part according to inspection results. (See 01–40A–9 PCM INSPECTION [L3].) Then go to Step 24.
		No	Go to the next step.
5	**VERIFY CURRENT INPUT SIGNAL STATUS UNDER TROUBLE CONDITION** • Inspect same PIDs as in Step 4 while simulating FREEZE FRAME DATA condition. • Is there any signal which causes drastic changes?	Yes	Inspect suspected circuit and/or part according to inspection results. (See 01–40A–9 PCM INSPECTION [L3].) Then go to Step 24.
		No	Go to the next step.
6	**INSPECT CMP SENSOR** • Inspect CMP sensor. (See 01–40A–48 CAMSHAFT POSITION (CMP) SENSOR INSPECTION [L3].) • Is CMP sensor normal?	Yes	Go to the next step.
		No	Inspect installation condition and damage on timing chain and gears, repair faulty parts. • If it is normal, replace CMP sensor. Then go to Step 24.
7	**VERIFY CKP SENSOR INSTALLATION CONDITION** • Inspect for CKP sensor looseness. • Is CKP sensor loose?	Yes	Retighten CKP sensor, then go to Step 20.
		No	Go to the next step.
8	**INSPECT IGNITION COIL HARNESS** • Inspect the ignition coil related harness condition (intermittent open or short) for all cylinders. • Are harness conditions normal?	Yes	Go to the next step.
		No	Repair suspected wiring harnesses, then go to Step 20.
9	**INSPECT IGNITION SYSTEM OPERATION** • Carry out Spark Test. (See 01–03A–69 Spark Test.) • Is strong blue spark visible at each cylinder?	Yes	Go to the next step.
		No	Repair or replace malfunctioning part according to Spark Test result. Then go to Step 20.
10	**INSPECT MAF PID** • Start engine. • Access MAF PID using the WDS or equivalent. • Verify that MAF PID changes quickly according to race engine RPM. • Is MAF PID response normal?	Yes	Go to the next step.
		No	Replace MAF sensor, then go to Step 20.
11	**INSPECT EXCESSIVE AIR SUCTION IN INTAKE AIR SYSTEM** • Inspect for air leakage at following: — Between MAF sensor and throttle body — Between throttle body and intake manifold • Is there any malfunction?	Yes	Repair or replace suspected part, then go to Step 20.
		No	Go to the next step.
12	**INSPECT FUEL LINE PRESSURE** • Inspect fuel line pressure. (See 01–14A–7 FUEL LINE PRESSURE INSPECTION [L3, AJ].) • Is fuel line pressure normal?	Yes	Go to Step 14.
		No	If fuel line pressure is too low, go to the next step. If fuel line pressure is excess high, replace fuel pump unit, then go to Step 20.
13	**INSPECT FUEL LINE FROM FUEL PUMP TO FUEL DELIVERY PIPE** • Visually inspect for fuel leakage in fuel line for any leakage. • Is any fuel leakage found?	Yes	Replace suspected fuel line, then go to Step 20.
		No	Inspect low-pressure side fuel filter for following: • Foreign materials or stain inside fuel filter Perform following actions depend on the result above. • If foreign materials or stain is found inside fuel filter (low-pressure side), clean of fuel tank and filter (low-pressure side). • If normal, replace fuel pump unit. Then, go to Step 20.
14	**INSPECT ENGINE COMPRESSION** • Inspect engine compression. (See 01–10A–4 COMPRESSION INSPECTION [L3].) • Is it normal?	Yes	Go to the next step.
		No	Implement engine overhaul for repairs, then go to Step 20.

STEP	INSPECTION		ACTION
15	**INSPECT VARIABLE VALVE TIMING CONTROL SYSTEM OPERATION** • Inspect variable valve timing control system operation. (See 01–03A–72 Variable Valve Timing Control System Operation Inspection.) • Does variable valve timing control system work properly?	Yes	Go to the next step.
		No	Repair or replace malfunctioning part according to variable valve timing control system inspection results, then go to Step 20.
16	**INSPECT OPERATION OF PURGE CONTROL SOLENOID VALVE** • Inspect purge control system operation. (See 01–03A–70 Purge Control System Inspection.) • Does purge control system work properly?	Yes	Go to the next step.
		No	Repair or replace malfunctioning part according to purge control system inspection results, then go to Step 20.
17	**INSPECT PCV VALVE OPERATION** • Turn the ignition switch off. • Remove PCV valve and inspect valve operation. (See 01–16A–23 POSITIVE CRANKCASE VENTILATION (PCV) VALVE INSPECTION [L3].) • Is PCV valve operation normal?	Yes	Replace PCV valve, then go to Step 20.
		No	Go to the next step.
18	**INSPECT OPERATION OF EGR VALVE** • Remove EGR valve. • Visually inspect for stuck to open. • Is EGR valve stuck to open?	Yes	Repair or replace EGR valve, then go to Step 20.
		No	Go to the next step.
19	**INSPECT SEALING OF ENGINE COOLANT PASSAGE** • Perform "ENGINE COOLANT LEAKAGE INSPECTION." (See 01–12A–7 ENGINE COOLANT LEAKAGE INSPECTION [L3, AJ].) • Is there any malfunction?	Yes	Go to the next step.
		No	Repair or replace the malfunctioning part according to inspection results. Then go to the next step.
20	**VERIFY TROUBLESHOOTING OF MISFIRE DTC COMPLETED** • Make sure to reconnect all disconnected connectors. • Turn ignition switch to ON (Engine off). • Clear the DTC from the memory using the WDS or equivalent. • Perform the KOER self-test using the WDS or equivalent. (See 01–02A–12 KOEO/KOER SELF TEST [L3].) • Is PENDING CODE for this DTC present?	Yes	Replace PCM, then go to the next step. (See 01–40A–9 PCM REMOVAL/INSTALLATION [L3].)
		No	Go to the next step.
21	**VERIFY AFTER REPAIR PROCEDURE** • Perform the "After Repair Procedure". (See 01–02A–12 AFTER REPAIR PROCEDURE [L3].) • Is any DTC present?	Yes	Go to the applicable DTC inspection. (See 01–02A–18 DTC TABLE [L3].)
		No	Troubleshooting completed.

DTC P0301, P0302, P0303, P0304 [L3]

E6U010200300W02

DTC P0301 **DTC P0302** **DTC P0303** **DTC P0304**	**Cylinder No.1 misfire detection** **Cylinder No.2 misfire detection** **Cylinder No.3 misfire detection** **Cylinder No.4 misfire detection**
DETECTION CONDITION	• PCM monitors crankshaft position sensor input signal interval time. PCM calculates the change of the interval time for each cylinder. If the change of interval time exceeds the preprogrammed criteria, PCM detects a misfire in the corresponding cylinder. While the engine is running, PCM counts the number of misfires that occurred at **200 crankshaft revolutions** and **1,000 crankshaft revolutions** and calculates misfire ratio for each crankshaft revolution. If the ratio exceeds the preprogrammed criteria, PCM determines that a misfire, which can damage the catalytic converter or affect emission performance, has occurred. **Diagnostic support note** • This is a continuous monitor (Misfire). • MIL illuminates if PCM detects the misfire which affects emission performance in two consecutive drive cycles or in one drive cycle while DTC for the same malfunction has been stored in PCM. • PENDING CODE is available if PCM detects the misfire which affects emission performance during first drive cycle. • MIL flashes if PCM detects the misfire which can damage the catalytic converter during first drive cycle. • FREEZE FRAME DATA is available. • DTC is stored in the PCM memory.
POSSIBLE CAUSE	• Spark plug malfunction • Ignition system malfunction • Fuel injector malfunction • Air suction in intake air system (between dynamic chamber and cylinder head) • Inadequate engine compression due to engine internal malfunction • Related connector or terminal malfunction • Related wiring harness malfunction

Diagnostic procedure

STEP	INSPECTION		ACTION
1	**VERIFY FREEZE FRAME DATA AND DIAGNOSTIC MONITORING TEST RESULTS HAVE BEEN RECORDED** • Have FREEZE FRAME DATA and DIAGNOSTIC MONITORING TEST RESULTS (Misfire related) been recorded?	Yes	Go to the next step.
		No	Record FREEZE FRAME DATA and DIAGNOSTIC MONITORING TEST RESULTS on repair order, then go to the next step.
2	**VERIFY RELATED REPAIR INFORMATION AVAILABILITY** • Check for related Service Bulletins and/or on-line repair information availability. • Is any related repair information available?	Yes	Perform repair or diagnosis according to the available repair information. • If the vehicle is not repaired, go to the next step.
		No	Go to the next step.
3	**VERIFY RELATED PENDING CODE OR STORED DTCS** • Turn ignition switch to OFF, then ON (Engine off). • Verify related pending code or stored DTCs. • Are other DTCs present?	Yes	Go to appropriate DTC inspection. (See 01–02A–18 DTC TABLE [L3].)
		No	Go to the next step.
4	**VERIFY CURRENT INPUT SIGNAL STATUS (ignition switch TO ON /IDLE)** • Access APP1, APP2, ECT, IAT, MAF, RPM, TP_REL and VSS PIDs using the WDS or equivalent. (See 01–40A–9 PCM INSPECTION [L3].) • Is there any signal that is far out of specification when ignition switch is ON and engine runs at idle?	Yes	Inspect suspected circuit and/or part according to inspection results. Then go to Step 15. (See 01–40A–9 PCM INSPECTION [L3].)
		No	Go to the next step.
5	**VERIFY CURRENT INPUT SIGNAL STATUS UNDER TROUBLE CONDITION** • Inspect same PIDs as in Step 4 while simulating FREEZE FRAME DATA condition. • Is there any signal which causes drastic changes?	Yes	Inspect suspected circuit and/or part according to inspection results. Then go to Step 15. (See 01–40A–9 PCM INSPECTION [L3].)
		No	Go to the next step.

STEP	INSPECTION		ACTION
6	**INSPECT SPARK PLUG CONDITION** • Turn the ignition switch off. • Remove spark plug from suspected cylinder. • Inspect spark plug condition: — Cracks — Excess wear — Gap — Wet • Is any problem found on spark plug?	Yes	• If spark plug is wet, fuel flooding is suspected. Go to step 12. • If spark plug has a cracks, excessive wear or improper gap, replace faulty spark plug. Then go to Step 14.
		No	Go to the next step.
7	**INSPECT IGNITION COIL HARNESS** • Inspect the ignition coil related harness condition (intermittent open or short) for all cylinders. • Are harness conditions normal?	Yes	Go to the next step.
		No	Repair suspected wiring harnesses, then go to Step 14.
8	**INSPECT IGNITION SYSTEM OPERATION** • Carry out Spark Test. (See 01–03A–69 Spark Test.) • Is strong blue spark visible at each cylinder?	Yes	Go to the next step.
		No	Repair or replace malfunctioning part according to Spark Test result. Then go to the Step 14.
9	**INSPECT FOR AIR SUCTION AT INTAKE AIR SYSTEM** • Inspect for air leakage at following: — Around connection of dynamic chamber and intake manifold — Around connection of intake manifold and cylinder head • Is air leakage found?	Yes	Repair or replace suspected part, then go to Step 14.
		No	Go to the next step.
10	**INSPECT FUEL INJECTOR HARNESS** • Remove intake air system parts. • Disconnect fuel injector connector on suspected cylinder. • Connect NOID LIGHT to fuel injector connector terminals. • Inspect light dimness during cranking. • Does noid light illuminate?	Yes	Go to the next step.
		No	Inspect fuel injector harnesses. Repair or replace it if necessary, then go to Step 14.
11	**INSPECT SEALING OF ENGINE COOLANT PASSAGE** • Perform "ENGINE COOLANT LEAKAGE INSPECTION." (See 01–12A–7 ENGINE COOLANT LEAKAGE INSPECTION [L3, AJ].) • Is there any malfunction?	Yes	Go to the next step.
		No	Repair or replace the malfunctioning part according to inspection results. Then go to the Step 14.
12	**INSPECT ENGINE COMPRESSION** • Inspect engine compression. (See 01–10A–4 COMPRESSION INSPECTION [L3].) • Is engine compression normal?	Yes	Go to the next step.
		No	Overhaul the engine, then go to Step 14.
13	**INSPECT FUEL INJECTOR OPERATION** • Remove fuel injector from suspected cylinder. • Swap injector with injector on other cylinder. • Start engine and run it at idle. • Is misfire DTC for cylinder which has a suspected fuel injector?	Yes	Replace injector, then go to the next step.
		No	Go to the next step.
14	**VERIFY TROUBLESHOOTING OF MISFIRE DTC COMPLETED** • Make sure to reconnect all disconnected connectors. • Start engine. • Clear the DTC from the PCM memory using the WDS or equivalent. • Perform the KOER self-test using the WDS or equivalent. (See 01–02A–12 KOEO/KOER SELF TEST [L3].) • Is PENDING CODE for this DTC present?	Yes	Replace PCM, then go to the next step. (See 01–40A–9 PCM REMOVAL/INSTALLATION [L3].)
		No	Go to the next step.
15	**VERIFY AFTER REPAIR PROCEDURE** • Perform the "After Repair Procedure". (See 01–02A–12 AFTER REPAIR PROCEDURE [L3].) • Is any DTC present?	Yes	Go to the applicable DTC inspection. (See 01–02A–18 DTC TABLE [L3].)
		No	Troubleshooting completed.

DTC P0327 [L3]

E6U010200300W03

DTC P0327	Knock sensor circuit low input
DETECTION CONDITION	• PCM monitors input signal from knock sensor when engine is running. If input voltage is **below 0.01 V*1, 0.06 V*2**, PCM determines that knock sensor circuit has malfunction. **Diagnostic support note** • This is a continuous monitor (CCM). • MIL illuminates if PCM detects the above malfunction condition during first drive cycle. • PENDING CODE is available if PCM detects the above malfunction condition. • FREEZE FRAME DATA is available. • DTC is stored in the PCM memory.
POSSIBLE CAUSE	• Knock sensor malfunction • Connector or terminal malfunction • Open or short to ground circuit between knock sensor connector terminal A and PCM terminal 2U • Open or short to ground circuit between knock sensor connector terminal B and PCM terminal 2V • Shorted knock sensor two wires • PCM malfunction

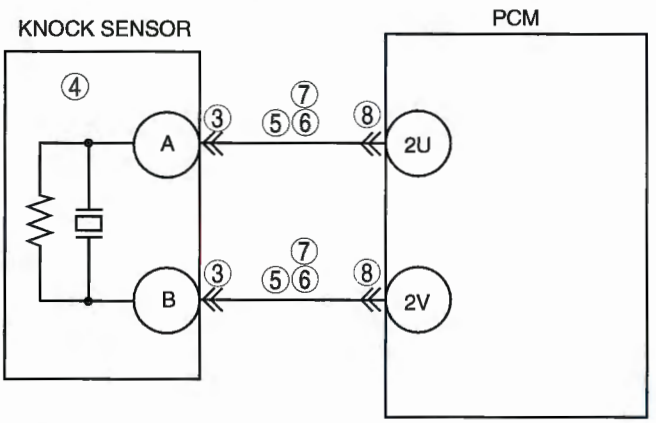

KNOCK SENSOR HARNESS SIDE CONNECTOR

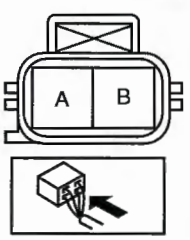

PCM WIRING HARNESS-SIDE CONNECTOR

2BE	2BA	2AW	2AS	2AO	2AK	2AG	2AC	2Y	2U	2Q	2M	2I	2E	2A
2BF	2BB	2AX	2AT	2AP	2AL	2AH	2AD	2Z	2V	2R	2N	2J	2F	2B
2BG	2BC	2AY	2AU	2AQ	2AM	2AI	2AE	2AA	2W	2S	2O	2K	2G	2C
2BH	2BD	2AZ	2AV	2AR	2AN	2AJ	2AF	2AB	2X	2T	2P	2L	2H	2D

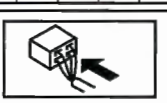

*1 : California emission regulation applicable ATX model
*2 : Except for California emission regulation applicable ATX model

Diagnostic procedure

STEP	INSPECTION		ACTION
1	**VERIFY FREEZE FRAME DATA HAS BEEN RECORDED** • Has FREEZE FRAME DATA been recorded?	Yes	Go to the next step.
		No	Record FREEZE FRAME DATA on repair order, then go to the next step.
2	**VERIFY RELATED REPAIR INFORMATION AVAILABILITY** • Check for related Service Bulletins and/or on-line repair information availability. • Is any related repair information available?	Yes	Perform repair or diagnosis according to the available repair information. • If the vehicle is not repaired, go to the next step.
		No	Go to the next step.
3	**INSPECT KNOCK SENSOR CONNECTOR TERMINAL FOR POOR CONNECTION** • Turn the ignition switch off. • Disconnect knock sensor connector. • Check for poor connection at terminals A and B (such as damaged, pulled-out pins, corrosion). • Is there any malfunction?	Yes	Repair terminal, then go to Step 9.
		No	Go to the next step.
4	**INSPECT KNOCK SENSOR** • Perform knock sensor inspection. (See 01–40A–49 KNOCK SENSOR (KS) INSPECTION [L3]) • Is knock sensor normal?	Yes	Go to the next step.
		No	Replace knock sensor, then go to the next step.
5	**INSPECT KNOCK SENSOR CIRCUITS FOR OPEN CIRCUIT** • Disconnect knock sensor connector. • Inspect continuity between the following circuits: — Knock sensor female terminal A (wiring harness-side) and PCM terminal 2U (wiring harness-side) — Knock sensor female terminal B (wiring harness-side) and PCM terminal 2V (wiring harness-side) • Is there continuity?	Yes	Go to the next step.
		No	Repair or replace suspected wiring harness, then go to Step 9.
6	**INSPECT KNOCK SENSOR CIRCUITS FOR SHORT TO GROUND** • Inspect continuity between following circuits: — Knock sensor female terminal A (wiring harness-side) and body ground — Knock sensor female terminal B (wiring harness-side) and body ground • Is there continuity?	Yes	Repair or replace suspected wiring harness, then go to Step 9.
		No	Go to the next step.
7	**INSPECT FOR SHORT CIRCUITS** • Inspect continuity between knock sensor female terminals A and B (wiring harness-side). • Is there continuity?	Yes	Repair or replace suspected harness, then go to Step 9.
		No	Go to the next step.
8	**INSPECT PCM CONNECTOR TERMINAL FOR POOR CONNECTION** • Turn the ignition switch off. • Disconnect PCM connector. • Inspect for poor connection at terminals 2U and 2V (such as damaged, pulled-out pins, corrosion). • Is there any malfunction?	Yes	Repair terminal, then go to the next step.
		No	Go to the next step.
9	**VERIFY TROUBLESHOOTING OF DTC P0327 COMPLETED** • Make sure to reconnect all disconnected connectors. • Turn ignition switch to ON (Engine off). • Clear the DTC from the PCM memory using the WDS or equivalent. • Start engine and warm it up completely. • Is same DTC present?	Yes	Replace PCM, then go to the next step. (See 01–40A–9 PCM REMOVAL/INSTALLATION [L3].)
		No	Go to the next step.
10	**VERIFY AFTER REPAIR PROCEDURE** • Perform the "After Repair Procedure". (See 01–02A–12 AFTER REPAIR PROCEDURE [L3].) • Is any DTC present?	Yes	Go to the applicable DTC inspection. (See 01–02A–18 DTC TABLE [L3].)
		No	Troubleshooting completed.

DTC P0328 [L3]

E6U010200300W04

DTC P0328	Knock sensor circuit high input
DETECTION CONDITION	• PCM monitors input signal from knock sensor when engine is running. If input voltage is **below 4.77 V*1, 4.9 V*2**, PCM determines that knock sensor circuit has malfunction. **Diagnostic support note** • This is a continuous monitor (CCM). • MIL illuminates if PCM detects the above malfunction condition during first drive cycle. • PENDING CODE is available if PCM detects the above malfunction condition. • FREEZE FRAME DATA is available. • DTC is stored in the PCM memory.
POSSIBLE CAUSE	• Knock sensor malfunction • Connector or terminal malfunction • Short to power supply in wiring between knock sensor terminal A and PCM terminal 2U • Short to power supply in wiring between knock sensor terminal B and PCM terminal 2V • PCM malfunction

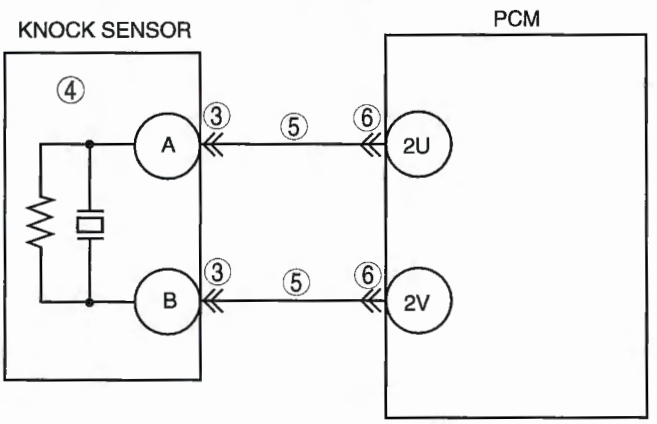

KNOCK SENSOR HARNESS SIDE CONNECTOR

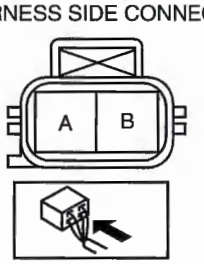

PCM WIRING HARNESS-SIDE CONNECTOR

2BE	2BA	2AW	2AS	2AO	2AK	2AG	2AC	2Y	2U	2Q	2M	2I	2E	2A
2BF	2BB	2AX	2AT	2AP	2AL	2AH	2AD	2Z	2V	2R	2N	2J	2F	2B
2BG	2BC	2AY	2AU	2AQ	2AM	2AI	2AE	2AA	2W	2S	2O	2K	2G	2C
2BH	2BD	2AZ	2AV	2AR	2AN	2AJ	2AF	2AB	2X	2T	2P	2L	2H	2D

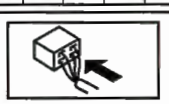

*1 : California emission regulation applicable ATX model
*2 : Except for California emission regulation applicable ATX model

Diagnostic procedure

STEP	INSPECTION		ACTION
1	**VERIFY FREEZE FRAME DATA HAS BEEN RECORDED** • Has FREEZE FRAME DATA been recorded?	Yes	Go to the next step.
		No	Record FREEZE FRAME DATA on repair order, then go to the next step.
2	**VERIFY RELATED REPAIR INFORMATION AVAILABILITY** • Check for related Service Bulletins and/or on-line repair information availability. • Is any related repair information available?	Yes	Perform repair or diagnosis according to the available repair information. • If the vehicle is not repaired, go to the next step.
		No	Go to the next step.
3	**INSPECT KNOCK SENSOR CONNECTOR TERMINAL FOR POOR CONNECTION** • Turn the ignition switch off. • Disconnect knock sensor connector. • Inspect for poor connection at terminals A and B (such as damaged, pulled-out pins, corrosion). • Is there any malfunction?	Yes	Repair terminal, then go to step 7.
		No	Go to the next step.
4	**INSPECT KNOCK SENSOR** • Perform knock sensor inspection. (See 01–40A–49 KNOCK SENSOR (KS) INSPECTION [L3]) • Is knock sensor normal?	Yes	Go to the next step.
		No	Replace knock sensor, then go to step 7.
5	**INSPECT KNOCK SIGNAL CIRCUIT FOR SHORT TO POWER SUPPLY** • Turn ignition switch ON (Engine off). • Measure voltage between knock sensor terminal A (wiring harness-side) and body GND and knock sensor terminal B (wiring harness-side) and body GND. • Is there any voltage?	Yes	Repair or replace harness for short to power supply, then go to step 7.
		No	Go to the next step.
6	**INSPECT PCM CONNECTOR FOR POOR CONNECTION** • Disconnect PCM connector. • Inspect for poor connection (such as damaged/ pulled-out pins, corrosion). • Is there any malfunction?	Yes	Repair or replace the terminal, then go to the next step.
		No	Go to the next step.
7	**VERIFY TROUBLESHOOTING OF DTC P0328 COMPLETED** • Make sure to connect all disconnected connectors. • Turn ignition switch to ON (Engine off). • Clear the DTC from the PCM memory using the WDS or equivalent. • Start engine and warm it up completely. • Is same DTC present?	Yes	Replace PCM, then go to the next step. (See 01–40A–9 PCM REMOVAL/INSTALLATION [L3].)
		No	Go to the next step.
8	**VERIFY AFTER REPAIR PROCEDURE** • Perform the "After Repair Procedure". (See 01–02A–12 AFTER REPAIR PROCEDURE [L3].) • Is any DTC present?	Yes	Go to the applicable DTC inspection. (See 01–02A–18 DTC TABLE [L3].)
		No	Troubleshooting completed.

DTC P0335 [L3]

E6U010200300W08

DTC P0335	CKP sensor circuit problem
DETECTION CONDITION	• If the PCM does not receive the input voltage from the CKP sensor for **4.2 s** while the MAF is **1.95 g/s {0.2[illegible] lb/min.} or above**, the PCM determines that the CKP sensor circuit has a malfunction. **Diagnostic support note** • This is a continuous monitor (CCM). • MIL illuminates if the PCM detects the above malfunction condition during first drive cycle. • PENDING CODE is available if the PCM detects the above malfunction condition. • FREEZE FRAME DATA is available. • DTCs are stored in the PCM memory.
POSSIBLE CAUSE	• CKP sensor malfunction • Connector or terminal malfunction • CKP sensor is dirty. • Short to the power supply between CKP sensor terminal B and PCM terminal 2W • Short to ground between CKP sensor terminal C and PCM terminal 2AQ • Short to ground between CKP sensor terminal B and PCM terminal 2W • Open circuit between CKP sensor terminal A and body ground • Open circuit between CKP sensor terminal B and PCM terminal 2W • Open circuit between CKP sensor terminal C and PCM terminal 2AQ • CKP sensor pulse wheel malfunction • Both CKP sensor wires are shorted to each other • PCM malfunction

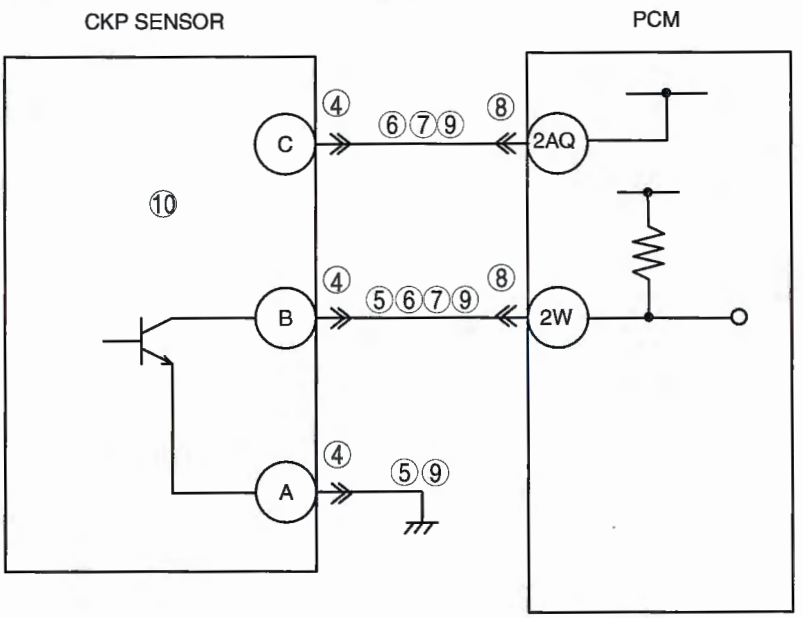

CKP SENSOR
WIRING HARNESS-SIDE CONNECTOR

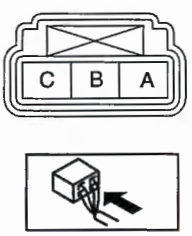

PCM
WIRING HARNESS-SIDE CONNECTOR

2BE	2BA	2AW	2AS	2AO	2AK	2AG	2AC	2Y	2U	2Q	2M	2I	2E	2A
2BF	2BB	2AX	2AT	2AP	2AL	2AH	2AD	2Z	2V	2R	2N	2J	2F	2B
2BG	2BC	2AY	2AU	2AQ	2AM	2AI	2AE	2AA	2W	2S	2O	2K	2G	2C
2BH	2BD	2AZ	2AV	2AR	2AN	2AJ	2AF	2AB	2X	2T	2P	2L	2H	2D

Diagnostic procedure

STEP	INSPECTION		ACTION
1	**VERIFY FREEZE FRAME DATA AND DIAGNOSTIC MONITORING TEST RESULTS HAS BEEN RECORDED** • Has FREEZE FRAME DATA been recorded?	Yes	Go to the next step.
		No	Record the FREEZE FRAME on the repair order, then go to the next step.
2	**VERIFY RELATED REPAIR INFORMATION AVAILABILITY** • Check for related Service Bulletins and/or on-line repair information availability. • Is any related repair information available?	Yes	Perform repair or diagnosis according to the available repair information. • If the vehicle is not repaired, go to the next step.
		No	Go to the next step.
3	**VERIFY CKP SENSOR VOLTAGE** • Disconnect the CKP sensor connector. • Connect the voltmeter between the CKP sensor connector terminals B and C (sensor-side). • Inspect the voltage in the AC range while cranking the engine. • Is there any voltage?	Yes	Go to the next step.
		No	Go to step 10.
4	**INSPECT CKP SENSOR CONNECTOR FOR POOR CONNECTION** • Verify that the CKP sensor connector is connected securely. • Is connector normal?	Yes	Go to the next step.
		No	Reconnect the connector, then go to Step 11.
5	**INSPECT CKP CIRCUIT FOR SHORT TO POWER SUPPLY** • Turn the ignition switch off • Disconnect the CKP sensor connector. • Turn ignition switch to the ON position (Engine off). • Measure the voltage between following terminals (wiring harness-side): — CKP sensor terminal B • Is the voltage **B+**?	Yes	Repair or replace the suspected wiring harness, then go to Step 11.
		No	Go to the next step.
6	**INSPECT CKP CIRCUIT FOR SHORT TO GROUND** • Inspect for continuity between following terminal and body ground: — CKP sensor connector terminal C (wiring harness-side) — CKP sensor connector terminal B (wiring harness-side) • Is there continuity?	Yes	Repair or replace the suspected wiring harness, then go to Step 11.
		No	Go to the next step.
7	**INSPECT CKP CIRCUITS FOR SHORT CIRCUIT** • Inspect for continuity between CKP sensor connector terminals B and C (wiring harness-side). • Is there continuity?	Yes	Repair or replace the suspected wiring harness, then go to Step 11.
		No	Go to the next step.
8	**INSPECT PCM CONNECTOR FOR POOR CONNECTION** • Disconnect the PCM connector. • Inspect for poor connection (such as damaged/pulled-out pins, corrosion). • Is there any malfunction?	Yes	Repair the terminal, then go to Step 11.
		No	Go to the next step.
9	**INSPECT CKP CIRCUIT FOR OPEN CIRCUIT** • Inspect for continuity between the following circuits: — CKP sensor terminal A (wiring harness-side) and body ground — CKP sensor terminal B (wiring harness-side) and PCM terminal 2W (wiring harness-side) — CKP sensor terminal C (wiring harness-side) and PCM terminal 2AQ • Are there continuity?	Yes	Go to Step 11.
		No	Repair or replace the suspected wiring harness, then go to Step 11.

STEP	INSPECTION		ACTION
10	**INSPECT CKP SENSOR** • Turn the ignition switch off. • Perform the CKP sensor inspection. (See 01–40A–46 CRANKSHAFT POSITION (CKP) SENSOR INSPECTION [L3]) • Is the CKP sensor normal?	Yes	Go to the next step.
		No	Inspect the CKP sensor pulse wheel for damage. Replace the CKP sensor pulse wheel and go to the next step.
11	**VERIFY TROUBLESHOOTING OF DTC P0335 COMPLETED** • Make sure to reconnect all disconnected connectors. • Turn ignition switch to the ON position (Engine off). • Clear the DTC from the PCM memory using the WDS or equivalent. • Start the engine. • Access the MAF PID using the WDS or equivalent. **Note** • The MAF PID should indicate **1.95 g/s {0.25 lb/min.} or above** during this test • Is the same DTC present?	Yes	Replace the PCM, then go to the next step. (See 01–40A–9 PCM REMOVAL/INSTALLATION [L3].)
		No	Go to the next step.
12	**VERIFY AFTER REPAIR PROCEDURE** • Perform the "After Repair Procedure". (See 01–02A–12 AFTER REPAIR PROCEDURE [L3].) • Are any DTCs present?	Yes	Go to the applicable DTC inspection. (See 01–02A–18 DTC TABLE [L3].)
		No	Troubleshooting completed.

DTC P0340 [L3]

E6U010200300W09

DTC P0340	CMP sensor circuit problem
DETECTION CONDITION	• The PCM monitors the input voltage from the CMP sensor when the engine is running. If the PCM does not receive the input voltage from the CMP sensor while the PCM receives the input signal from the CKP sensor, the PCM determines that the CMP circuit has a malfunction. **Diagnostic support note** • This is a continuous monitor (CCM). • MIL illuminates if the PCM detects the above malfunction condition during first drive cycle. • PENDING CODE is available if the PCM detects the above malfunction condition. • FREEZE FRAME DATA is available. • DTCs are stored in the PCM memory.
POSSIBLE CAUSE	• CMP sensor malfunction • Connector or terminal malfunction • CMP sensor is dirty • Short to the power circuit between CMP sensor terminal B and PCM terminal 2S • Short to ground circuit between CMP sensor terminal C and PCM terminal 2AM • Short to ground circuit between CMP sensor terminal B and PCM terminal 2S • Open circuit between CMP sensor terminal A and body ground • Open circuit between CMP sensor terminal B and PCM terminal 2S • Open circuit between CMP sensor terminal C and PCM terminal 2AM • Both CMP sensor wires are shorted to each other • CKP sensor pulse wheel malfunction • CKP sensor misinstallation • Timing chain misinstallation • Loose timing chain or improper valve timing • Loose camshaft sprocket lock bolt • Loose crankshaft pulley lock bolt • PCM malfunction

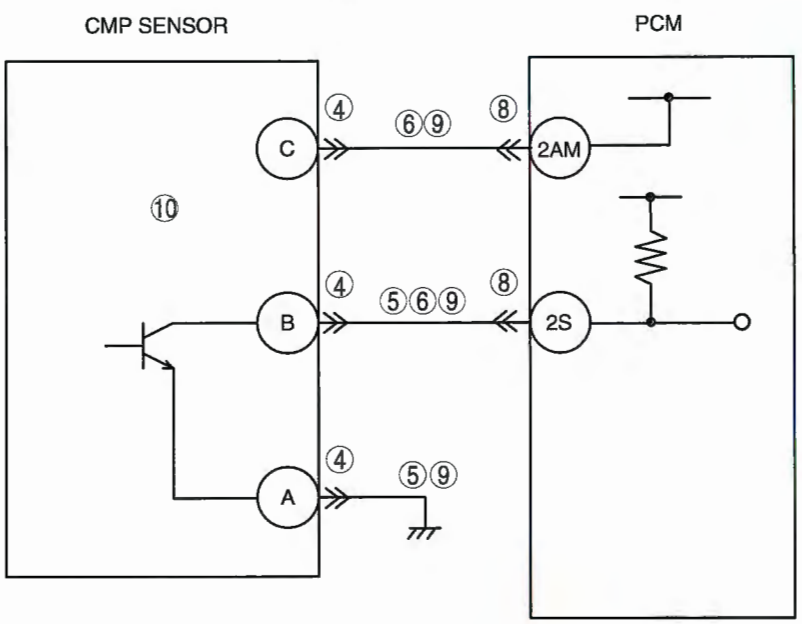

CMP SENSOR
WIRING HARNESS-SIDE CONNECTOR

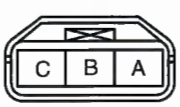

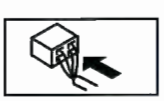

PCM
WIRING HARNESS-SIDE CONNECTOR

2BE	2BA	2AW	2AS	2AO	2AK	2AG	2AC	2Y	2U	2Q	2M	2I	2E	2A
2BF	2BB	2AX	2AT	2AP	2AL	2AH	2AD	2Z	2V	2R	2N	2J	2F	2B
2BG	2BC	2AY	2AU	2AQ	2AM	2AI	2AE	2AA	2W	2S	2O	2K	2G	2C
2BH	2BD	2AZ	2AV	2AR	2AN	2AJ	2AF	2AB	2X	2T	2P	2L	2H	2D

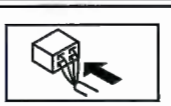

Diagnostic procedure

STEP	INSPECTION		ACTION
1	**VERIFY FREEZE FRAME DATA AND DIAGNOSTIC MONITORING TEST RESULTS HAS BEEN RECORDED** • Has FREEZE FRAME DATA been recorded?	Yes	Go to the next step.
		No	Record the FREEZE FRAME on the repair order, then go t the next step.
2	**VERIFY RELATED REPAIR INFORMATION AVAILABILITY** • Check for related Service Bulletins and/or on-line repair information availability. • Is any related repair information available?	Yes	Perform repair or diagnosis according to the available repair information. • If the vehicle is not repaired, go to the next step.
		No	Go to the next step.
3	**VERIFY CMP SENSOR VOLTAGE** • Disconnect the CMP sensor connector. • Connect a voltmeter between CMP sensor connector terminals B and C (sensor-side). • Inspect the voltage in AC range while cranking the engine. • Is there any voltage?	Yes	Go to the next step.
		No	Go to step 10.
4	**INSPECT CMP SENSOR CONNECTOR FOR POOR CONNECTION** • Verify that the CMP sensor connector is connected securely. • Is the connector normal?	Yes	Go to the next step.
		No	Reconnect the connector, then go to Step 15.
5	**INSPECT CMP CIRCUIT FOR SHORT TO POWER** • Turn the ignition switch off. • Disconnect the CMP sensor connector. • Turn ignition switch to the ON position (Engine off) • Measure voltage between the CMP sensor connector terminal B (wiring harness-side) and body ground. • Is the voltage **B+**?	Yes	Repair or replace the suspected wiring harness, then go to Step 15.
		No	Go to the next step.
6	**INSPECT CMP CIRCUIT FOR SHORT TO GROUND** • Inspect for continuity between the following terminal and body ground: — CMP sensor connector terminal B (wiring harness-side) — CMP sensor connector terminal C (wiring harness-side) • Is there continuity?	Yes	Repair or replace the suspected wiring harness, then go to Step 15.
		No	Go to the next step.
7	**INSPECT CMP CIRCUITS FOR SHORT CIRCUIT** • Inspect for continuity between CMP sensor connector terminals B and C (wiring harness-side). • Is there continuity?	Yes	Repair or replace the suspected wiring harness, then go to Step 15.
		No	Go to the next step.
8	**INSPECT PCM CONNECTOR FOR POOR CONNECTION** • Disconnect the PCM connector. • Inspect for poor connection (damaged, pulled-out terminals, corrosion, etc.). • Is there any malfunction?	Yes	Repair the terminal, then go to Step 15.
		No	Go to the next step.
9	**INSPECT CMP CIRCUIT FOR OPEN CIRCUIT** • Inspect for continuity between the following circuits: — CMP sensor terminal A (wiring harness-side) and body ground — CMP sensor terminal B (wiring harness-side) and PCM terminal 2S (wiring harness-side) — CMP sensor terminal C (wiring harness-side) and PCM terminal 2AM (wiring harness-side) • Is there continuity?	Yes	Go to Step 11.
		No	Repair or replace the suspected wiring harness, then go to Step 15.

STEP	INSPECTION		ACTION
10	**INSPECT CMP SENSOR** • Turn the ignition switch off. • Perform the CMP sensor inspection. (See 01–40A–48 CAMSHAFT POSITION (CMP) SENSOR INSPECTION [L3].) • Is the CMP sensor normal?	Yes	Go to the Step 15.
		No	Replace the CMP sensor and go to Step 15.
11	**VERIFY CKP SENSOR INSTALLATION** • Verify the CKP sensor installation. (See 01–40A–45 CRANKSHAFT POSITION (CKP) SENSOR REMOVAL/INSTALLATION [L3].) • Is the CKP sensor installed correctly?	Yes	Go to the next step.
		No	Reinstall the CKP sensor and go to Step 15.
12	**VERIFY VALVE TIMING MECHANISM INSTALLATION** • Verify the valve timing mechanism installation for the following parts: — Timing chain misinstallation — Loose camshaft sprocket lock bolt — Loose crankshaft pulley lock bolt • Is the valve timing mechanism installed correctly?	Yes	Go to the next step.
		No	Reinstall the following parts and go to Step 15. • Timing chain • Camshaft sprocket • Crankshaft pulley
13	**INSPECT STOPPER PIN MECHANISM (LF, L3)** • Remove the timing chain. • Inspect the stopper pin. (See 01–10A–30 VARIABLE VALVE TIMING ACTUATOR INSPECTION [L3].) • Is the stopper pin mechanism normal?	Yes	Go to the next step.
		No	Replace the variable valve timing actuator, then go to Step 15.
14	**INSPECT ROTOR POSITION (LF, L3)** • Remove the variable valve timing actuator. (See 01–10A–31 VARIABLE VALVE TIMING ACTUATOR REMOVAL/INSTALLATION [L3]) • Is the rotor position at the maximum valve timing retard?	Yes	**VARIABLE VALVE TIMING MECHANISM NORMAL** **Note** • This DTC is detected as an intermittent concern. • The intermittent concern might be removed by cleaning the variable valve timing mode control function. Go to the next step.
		No	Replace the variable valve timing actuator, then go to the next step.
15	**VERIFY TROUBLESHOOTING OF DTC P0340 COMPLETED** • Make sure to reconnect all disconnected connectors. • Turn ignition switch to the ON position (Engine off). • Clear the DTC from the PCM memory using the WDS or equivalent. • Start the engine. • Access the MAF PID using the WDS or equivalent. **Note** • The MAF PID should indicate **1.95 g/s {0.25 lb/min.} or above** during this test • Is same DTC present?	Yes	Replace the PCM, then go to the next step. (See 01–40A–9 PCM REMOVAL/INSTALLATION [L3].)
		No	Go to the next step.
16	**VERIFY AFTER REPAIR PROCEDURE** • Perform the "After Repair Procedure". (See 01–02A–12 AFTER REPAIR PROCEDURE [L3].) • Are any DTCs present?	Yes	Go to the applicable DTC inspection. (See 01–02A–18 DTC TABLE [L3].)
		No	Troubleshooting completed.

DTC P0401 [L3]

E6U010200400W01

DTC P0401	EGR flow insufficient detected
DETECTION CONDITION	• PCM monitors difference in intake manifold pressures when EGR is operated and when it is stopped. If the difference is too small, PCM determines that EGR flow insufficient. **Diagnostic support note** • This is an intermittent monitor (EGR). • MIL illuminates if PCM detects above malfunction condition in two consecutive drive cycles or in one drive cycle while DTC for the same malfunction has been stored in PCM. • PENDING CODE is available if PCM detects the above malfunction condition during first drive cycle. • FREEZE FRAME DATA is available. • DTC is stored in the PCM memory.
POSSIBLE CAUSE	• EGR valve malfunction • MAP sensor malfunction • EGR gasket malfunction • PCM malfunction

Diagnostic procedure

STEP	INSPECTION		ACTION
1	**VERIFY FREEZE FRAME DATA AND DIAGNOSTIC MONITORING TEST RESULTS HAVE BEEN RECORDED** • Have FREEZE FRAME DATA and DIAGNOSTIC MONITORING TEST RESULTS (EGR related) been recorded?	Yes	Go to the next step.
		No	Record FREEZE FRAME DATA and DIAGNOSTIC MONITORING TEST RESULTS on repair order, then go to the next step.
2	**VERIFY RELATED REPAIR INFORMATION AVAILABILITY** • Check for related Service Bulletins and/or on-line repair information availability. • Is any related repair information available?	Yes	Perform repair or diagnosis according to the available repair information. • If the vehicle is not repaired, go to the next step.
		No	Go to the next step.
3	**INSPECT FOR OTHER DTCS** • Turn ignition switch to OFF then ON (Engine off). • Have other DTCs been stored?	Yes	Repair circuit malfunction for applicable DTCs.
		No	Go to the next step.
4	**INSPECT VACUUM HOSE CONDITION** • Inspect vacuum hoses for clogs, any damages, frozen, or vacuum leakage. • Is there any malfunction?	Yes	Replace vacuum hoses, then go to Step 8.
		No	Go to the next step.
5	**INSPECT EGR VALVE MALFUNCTION** • Perform EGR valve inspection. (See 01–16A–17 EGR VALVE INSPECTION [L3].) • Is EGR valve normal?	Yes	Go to the next step.
		No	Replace EGR valve, then go to Step 8.
6	**INSPECT MAP SENSOR MALFUNCTION** • Perform MAP sensor inspection. (See 01–40A–36 MANIFOLD ABSOLUTE PRESSURE (MAP) SENSOR INSPECTION [L3].) • Is EGR valve normal?	Yes	Go to the next step.
		No	Replace MAP sensor, then go to Step 8.
7	**INSPECT EGR VALVE PASSAGE** • Turn the ignition switch off. • Remove EGR valve. • Is gasket installation normal?	Yes	Go to the next step.
		No	Install gasket correctly, then go to the next step.
8	**MONITOR EGR SYSTEM BY DRIVE MODE** • Clear the DTC from the PCM memory using the WDS or equivalent. • Run DRIVE MODE 1. (See 01–02A–13 OBD-II DRIVE MODE [L3].) • Stop vehicle and access ON BOARD READINESS TEST to inspect DRIVE MODE completion status. • Verify FUEL_EVAL PID status. • Does FUEL_EVAL PID change to Yes?	Yes	Retry this step.
		No	Go to the next step.
9	**MONITOR EGR SYSTEM BY DRIVE MODE** • Run DRIVE MODE 2. (See 01–02A–14 EGR System Repair Verification Drive Mode.) • Stop vehicle and access ON BOARD SYSTEM READINESS TEST to inspect DRIVE MODE completion status. • Verify EGR_EVAL PID status. • Does EGR_EVAL PID change to Yes?	Yes	Go to the next step.
		No	Retry this step.
10	**VERIFY TROUBLESHOOTING OF DTC P0401 COMPLETED** • Make sure to reconnect all disconnected connectors. • Access DIAGNOSTIC MONITORING TEST RESULTS. (See 01–02A–12 Diagnostic Monitoring Test Results Access Procedure.) • Verify TEST #10: 31: 83 (EGR flow test) value. • Is value within specification?	Yes	Go to the next step.
		No	Replace PCM, then go to the next step.
11	**VERIFY AFTER REPAIR PROCEDURE** • Perform the "After Repair Procedure". (See 01–02A–12 AFTER REPAIR PROCEDURE [L3].) • Is any DTC present?	Yes	Go to the applicable DTC inspection. (See 01–02A–18 DTC TABLE [L3].)
		No	Troubleshooting completed.

DTC P0403 [L3]

E6U010200400W17

DTC P0403	EGR valve (stepper motor) circuit problem
DETECTION CONDITION	**California emission regulation applicable ATX model** • The PCM monitors the EGR valve control signal voltage and current. If the following conditions are met, th PCM determines that there is the EGR control circuit problem. — The PCM turns the EGR valve off, but the voltage of the EGR valve control signal remains low. — The PCM turns the EGR valve on, but the current of the EGR valve control signal remains high. **Diagnostic support note** • This is a continuous monitor (CCM). • The MIL illuminates if the PCM detects the above malfunction conditions in two consecutive drive cycles or in one drive cycle while the DTC for the same malfunction has been stored in the PCM. • PENDING CODE is available if the PCM detects the above malfunction condition during the first drive cycle. • FREEZE FRAME DATA is available. • The DTC is stored in the PCM memory.
	Except for California emission regulation applicable ATX model • The PCM monitors the input voltage from EGR valve. If the voltage remain low or high, the PCM determines that the EGR valve circuit has a malfunction. **Diagnostic support note** • This is a continuous monitor (CCM). • The MIL illuminates if the PCM detects the above malfunction conditions in two consecutive drive cycles or in one drive cycle while the DTC for the same malfunction has been stored in the PCM. • PENDING CODE is available if the PCM detects the above malfunction condition during first drive cycle. • FREEZE FRAME DATA is available. • Are any DTCs is stored in the PCM memory.
POSSIBLE CAUSE	• EGR valve malfunction • Connector or terminal malfunction • Short to power supply in wiring harness between EGR valve terminal E and PCM terminal 2K • Short to power supply in wiring harness between EGR valve terminal A and PCM terminal 2G • Short to power supply in wiring harness between EGR valve terminal B and PCM terminal 2L • Short to power supply in wiring harness between EGR valve terminal F and PCM terminal 2H • Short to ground circuit in wiring harness between EGR valve terminal E and PCM terminal 2K • Short to ground circuit in wiring harness between EGR valve terminal A and PCM terminal 2G • Short to ground circuit in wiring harness between EGR valve terminal B and PCM terminal 2L • Short to ground circuit in wiring harness between EGR valve terminal F and PCM terminal 2H • Open circuit in wiring harness between EGR valve terminal E and PCM terminal 2K • Open circuit in wiring harness between EGR valve terminal A and PCM terminal 2G • Open circuit in wiring harness between EGR valve terminal B and PCM terminal 2L • Open circuit in wiring harness between EGR valve terminal F and PCM terminal 2H • Open circuit in wiring harness between main relay terminal D and EGR valve terminal C • Open circuit in wiring harness between main relay terminal D and EGR valve terminal D • PCM malfunction

DTC P0403	EGR valve (stepper motor) circuit problem

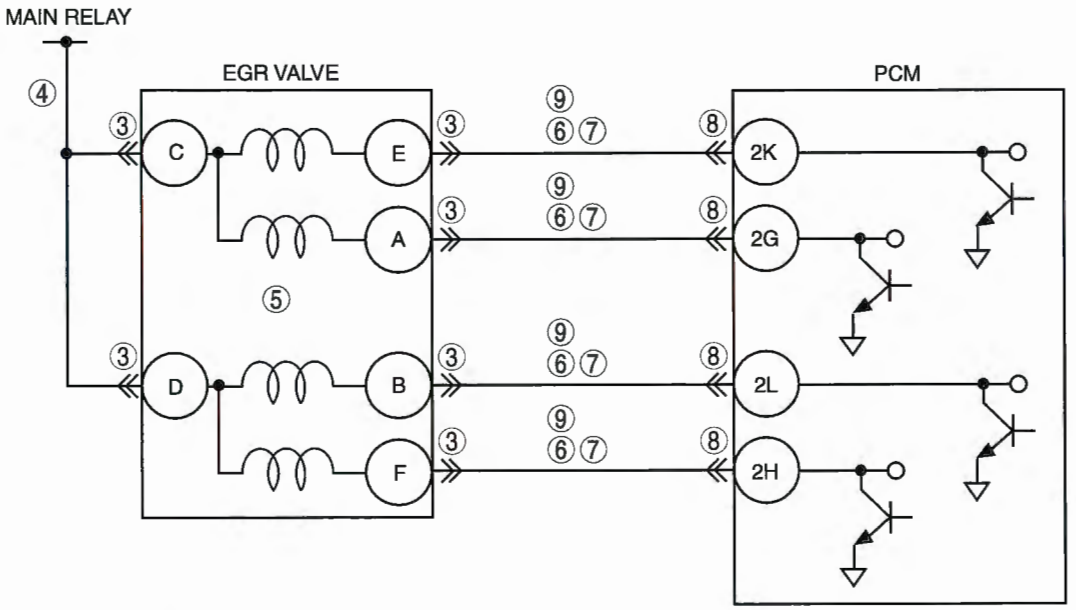

EGR VALVE
WIRING HARNESS-SIDE CONNECTOR

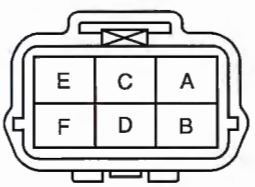

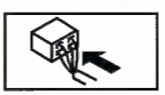

PCM
WIRING HARNESS-SIDE CONNECTOR

2BE	2BA	2AW	2AS	2AO	2AK	2AG	2AC	2Y	2U	2Q	2M	2I	2E	2A
2BF	2BB	2AX	2AT	2AP	2AL	2AH	2AD	2Z	2V	2R	2N	2J	2F	2B

2BG	2BC	2AY	2AU	2AQ	2AM	2AI	2AE	2AA	2W	2S	2O	2K	2G	2C
2BH	2BD	2AZ	2AV	2AR	2AN	2AJ	2AF	2AB	2X	2T	2P	2L	2H	2D

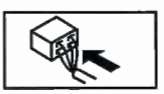

Diagnostic procedure

STEP	INSPECTION		ACTION
1	**VERIFY FREEZE FRAME DATA AND DIAGNOSTIC MONITORING TEST RESULTS HAS BEEN RECORDED** • Has FREEZE FRAME DATA been recorded?	Yes	Go to the next step.
		No	Record the FREEZE FRAME on the repair order, then go to the next step.
2	**VERIFY RELATED REPAIR INFORMATION AVAILABILITY** • Check for related Service Bulletins and/or on-line repair information availability. • Is any related repair information available?	Yes	Perform repair or diagnosis according to the available repair information. • If the vehicle is not repaired, go to the next step.
		No	Go to the next step.
3	**INSPECT EGR VALVE FOR POOR CONNECTION** • Turn the ignition switch off. • Disconnect EGR valve connector. • Inspect for poor connection (such as damaged/ pulled-out pins, corrosion). • Is there any malfunction?	Yes	Repair or replace the terminals and/or connector, then go to Step 10.
		No	Go to the next step.
4	**INSPECT POWER CIRCUIT FOR OPEN CIRCUIT** • Turn the ignition switch to the ON position (Engine off). • Measure the voltage following terminal and body ground. — EGR valve terminal C — EGR valve terminal D • Is the voltage **B+**?	Yes	Go to the next step.
		No	Repair or replace the wiring harness for an open circuit then go to Step 10.

STEP	INSPECTION		ACTION
5	**INSPECT EGR VALVE** • Inspect the EGR valve. (See 01–16A–17 EGR VALVE INSPECTION [L3].) • Is the EGR valve normal?	Yes	Go to the next step.
		No	Replace the EGR valve, then go to Step 10.
6	**INSPECT FOR CONTROL CIRCUIT FOR SHORT TO GROUND** • Turn the ignition switch off. • Inspect for continuity between the following terminal and body ground: — EGR valve terminal E — EGR valve terminal A — EGR valve terminal B — EGR valve terminal F • is there continuity?	Yes	Repair or replace the wiring harness for short to ground, then go to Step 10.
		No	Go to the next step.
7	**INSPECT FOR CONTROL CIRCUIT FOR SHORT TO POWER** • Turn the ignition switch to the ON position (Engine off). • Measure the voltage following terminal and body ground: — EGR valve terminal E — EGR valve terminal A — EGR valve terminal B — EGR valve terminal F • Is the voltage **B+**?	Yes	Repair or replace the wiring harness for short to power supply, then go to Step 10.
		No	Go to the next step.
8	**INSPECT PCM FOR POOR CONNECTION** • Turn the ignition switch off. • Disconnect the PCM connector. • Inspect for poor connection (such as damaged/ pulled-out pins, corrosion). • Is there any malfunction?	Yes	Repair or replace the terminals and/or connector, then go to Step 10.
		No	Go to the next step.
9	**INSPECT CONTROL CIRCUIT FOR OPEN CIRCUIT** • Remove the PCM with the PCM connector connected. • Inspect for continuity following terminals: — Between EGR valve terminal E and PCM terminal 2K — Between EGR valve terminal A and PCM terminal 2G — Between EGR valve terminal B and PCM terminal 2L — Between EGR valve terminal F and PCM terminal 2H • Is there continuity?	Yes	Go to the next step.
		No	Repair or replace the wiring harness for an open circuit then go to the next step.
10	**VERIFY TROUBLESHOOTING OF DTC P0403 COMPLETED** • Make sure to reconnect all disconnected connectors. • Clear the DTC from the PCM memory using the WDS or equivalent. • Start the engine. • Is the PENDING CODE for this DTC present?	Yes	Replace the PCM, then go to the next step. (See 01–40A–9 PCM REMOVAL/INSTALLATION [L3].)
		No	Go to the next step.
11	**VERIFY AFTER REPAIR PROCEDURE** • Perform the "AFTER REPAIR PROCEDURE". (See 01–02A–12 AFTER REPAIR PROCEDURE [L3].) • Are any DTC present?	Yes	Go to the applicable DTC troubleshooting. (See 01–02A–18 DTC TABLE [L3].)
		No	Troubleshooting completed.

DTC P0420 [L3]

E6U010200400W03

DTC P0420	Catalyst system efficiency below threshold
DETECTION CONDITION	• The PCM compares the number of front HO2S and rear HO2S inversions for a predetermined time. The PCM monitors the rear HO2S inversion counts when the following conditions are met: The PCM detects inversion ratio. If the inversion ratio is below threshold, the PCM determine that catalyst system has deteriorated. — The front HO2S inversion counts is as prescribed when the following monitoring conditions are met: — The accumulated occurrence time of the following monitoring conditions has exceeded the prescribed time limit: **MONITORING CONDITION** — Engine speed **1,300—3,000 rpm** — Calculated TWC temperature is **above400 °C {752 °F}** — Calculated load **15—48%** (at engine speed **2,000 rpm**) **Diagnostic support note** • This is an intermittent monitor. (Catalyst) • MIL illuminates if PCM detects above malfunction condition in two consecutive drive cycles or in one drive cycle while DTC for the same malfunction has been stored in PCM. • PENDING CODE is available if PCM detects the above malfunction condition during first drive cycle. • FREEZE FRAME DATA is available. • DTC is stored in the PCM memory. • DIAGNOSTIC MONITORING TEST RESULTS is available.
POSSIBLE CAUSE	• TWC deterioration or malfunction • Exhaust gas leakage • Looseness of front HO2S • Looseness of rear HO2S • PCM malfunction

Diagnostic procedure

STEP	INSPECTION		ACTION
1	**VERIFY FREEZE FRAME DATA AND DIAGNOSTIC MONITORING TEST RESULTS HAVE BEEN RECORDED** • Have FREEZE FRAME DATA and DIAGNOSTIC MONITORING TEST RESULTS (Catalyst related) been recorded?	Yes	Go to the next step.
		No	Record FREEZE FRAME DATA and DIAGNOSTIC MONITORING TEST RESULTS on repair order, then go to the next step.
2	**VERIFY RELATED REPAIR INFORMATION AVAILABILITY** • Check for related Service Bulletins and/or on-line repair information availability. • Is any related repair information available?	Yes	Perform repair or diagnosis according to the available repair information. • If the vehicle is not repaired, go to the next step.
		No	Go to the next step.
3	**VERIFY RELATED PENDING CODE OR STORED DTCS** • Turn ignition switch to OFF then ON (Engine off). • Verify related pending code or stored DTCs. • Are other DTCs present?	Yes	Go to appropriate DTC inspection.
		No	Go to the next step.
4	**INSPECT GAS LEAKAGE OF EXHAUST SYSTEM** • Visually inspect exhaust gas leakage in exhaust system. • Is there gas leakage?	Yes	Repair or replace faulty exhaust parts, then go to Step 7.
		No	Go to the next step.
5	**INSPECT INSTALLATION OF FRONT AND REAR OXYGEN SENSORS** • Inspect for looseness of front and rear oxygen sensors. • Is it normal?	Yes	Go to the next step.
		No	Retighten sensor, then go to Step 7.
6	**INSPECT TWC** • Clear DTC using the WDS or equivalent. • Cycle ignition switch to OFF then back to ON. • Inspect TWC. • Is it normal?	Yes	Replace suspected oxygen sensor, then go to the next step.
		No	Replace TWC, then go to the next step.

STEP	INSPECTION		ACTION
7	**VERIFY TROUBLESHOOTING OF DTC P0420 COMPLETED** • Make sure to reconnect all disconnected connectors. • Turn ignition switch to ON (Engine off). • Clear the DTC from the memory using the WDS or equivalent. • Start engine and perform "PCM Adaptive Memory Procedure Drive Mode" and "EGR System Repair Verification Drive Mode". (See 01–02A–13 OBD-II DRIVE MODE [L3].) • Is PENDING CODE for this DTC present?	Yes	Replace PCM, then go to the next step. (See 01–40A–9 PCM REMOVAL/INSTALLATION [L3].)
		No	Go to the next step.
8	**VERIFY AFTER REPAIR PROCEDURE** • Perform the "After Repair Procedure". (See 01–02A–12 AFTER REPAIR PROCEDURE [L3].) • Is any DTC present?	Yes	Go to the applicable DTC inspection. (See 01–02A–18 DTC TABLE [L3].)
		No	Troubleshooting completed.

DTC P0421 [L3]

E6U010200400W04

DTC P0421	Warm up catalyst system efficiency below threshold
DETECTION CONDITION	• The PCM monitors the input voltage from the middle HO2S and the rear HO2S output current when the following conditions are met. If the input voltage change is extremely large compared to the output current change, the PCM determines that the catalyst system has deteriorated. **MONITORING CONDITION** — ECT: **more than 70 °C {158 °F}** — Catalyst converter temperature: **more than 350 °C {662 °F}** — Engine speed: **1,000—4,000 rpm** — LOAD: **19—56%** (at engine speed **2,000 rpm**) — Time with purge control system does not operate: **more than 5 s** **Diagnostic support note** • This is an intermittent monitor (Catalyst). • MIL illuminates if PCM detects above malfunction condition in two consecutive drive cycles or in one drive cycle while DTC for the same malfunction has been stored in PCM. • PENDING CODE is available if PCM detects the above malfunction condition during first drive cycle. • DIAGNOSTIC MONITORING TEST RESULTS is available. • FREEZE FRAME DATA is available. • The DTC is stored in the PCM memory.
POSSIBLE CAUSE	• Exhaust gas leakage • Loose front HO2S • Loose middle HO2S • Loose rear HO2S • TWC deterioration or malfunction • PCM malfunction

Diagnostic procedure

STEP	INSPECTION		ACTION
1	**VERIFY FREEZE FRAME DATA AND DIAGNOSTIC MONITORING TEST RESULTS HAVE BEEN RECORDED** • Have FREEZE FRAME DATA and DIAGNOSTIC MONITORING TEST RESULTS (Catalyst related) been recorded?	Yes	Go to the next step.
		No	Record the FREEZE FRAME DATA and DIAGNOSTIC MONITORING TEST RESULTS on the repair order, then go to the next step.
2	**VERIFY RELATED REPAIR INFORMATION AVAILABILITY** • Verify related Service Bulletins and/or on-line repair information availability. • Is any related repair information available?	Yes	Perform repair or diagnosis according to the available repair information. • If the vehicle is not repaired, go to the next step.
		No	Go to the next step.
3	**VERIFY RELATED PENDING CODE OR STORED DTC** • Turn the ignition switch off, then to the ON position (Engine off). • Verify the related PENDING CODE or stored DTCs. • Are other DTCs present?	Yes	Go to the applicable DTC inspection. (See 01–02A–18 DTC TABLE [L3].)
		No	Go to the next step.
4	**INSPECT EXHAUST SYSTEM FOR EXHAUST GAS LEAKAGE** • Visually inspect exhaust gas leakage in the exhaust system. • Is there exhaust gas leakage?	Yes	Repair or replace the malfunctioning part, then go to Step 7.
		No	Go to the next step.
5	**INSPECT INSTALLATION OF MIDDLE AND REAR HO2S** • Inspect the middle and rear HO2S for looseness. • Is it normal?	Yes	Go to the next step.
		No	Retighten the sensor, then go to Step 7. (See 01–15A–2 EXHAUST SYSTEM REMOVAL/ INSTALLATION [L3].)
6	**INSPECT TWC** • Clear the DTC using the WDS or equivalent generic OBD function. • Turn the ignition switch off then back to the ON position. • Inspect the TWC. (See 01–16A–23 WARM-UP THREE-WAY CATALYTIC CONVERTER (WU-TWC) INSPECTION [L3, AJ].) • Is it normal?	Yes	Replace the heated oxygen sensor, then go to the next step.
		No	Replace the TWC, then go to the next step.
7	**VERIFY TROUBLESHOOTING OF DTC P0421 COMPLETED** • Make sure to reconnect all disconnected connectors. • Turn the ignition switch to the ON position (Engine off). • Clear the DTC from the memory using the WDS or equivalent. • Perform the HO2S heater, HO2S, and TWC Repair Verification Drive Mode. (See 01–02A–13 OBD-II DRIVE MODE [L3].) • Is the PENDING CODE for this DTC present?	Yes	Replace the PCM, then go to the next step. (See 01–40A–9 PCM REMOVAL/INSTALLATION [L3].)
		No	Go to the next step.
8	**VERIFY AFTER REPAIR PROCEDURE** • Perform the "AFTER REPAIR PROCEDURE". (See 01–02A–12 AFTER REPAIR PROCEDURE [L3].) • Are any DTC present?	Yes	Go to the applicable DTC troubleshooting. (See 01–02A–18 DTC TABLE [L3].)
		No	Troubleshooting completed.

DTC P0441 [L3]

E6U010200400W05

DTC P0441	EVAP control system incorrect purge flow
DETECTION CONDITION	• PCM measures the purge line pressure, which is the vacuum when a following condition. If vacuum between charcoal canister and intake manifold does not reach the specified, PCM determines that the EVAP system has clogging. **MONITORING CONDITION** — Engine speed: **1,500—3.450 rpm** [MTX], **1,220—3.550 rpm** [ATX] — Throttle opening angle: **25 %** (At engine speed is **2500 rpm**) — Vehicle speed: **69.5—136 km/h {43.2—84.5 mph}** [MTX], **34.5—136 km/h {21.4—84.5 mph}** [ATX] **Diagnostic support note** • This is an intermittent monitor (EVAP system monitor). • MIL illuminates if PCM detects above malfunction condition in two consecutive drive cycles or in one drive cycle while DTC for the same malfunction has been stored in PCM. • PENDING CODE is available if PCM detects the above malfunction condition during first drive cycle. • FREEZE FRAME DATA is available. • DTC is stored in the PCM memory. • DIAGNOSTIC MONITORING TEST RESULTS is available.
POSSIBLE CAUSE	• Purge solenoid valve malfunction • EVAP system leak detection pump malfunction • Charcoal canister malfunction • Damaged or loose EVAP hose • EVAP pipe damaged • PCM malfunction

Diagnostic procedure

STEP	INSPECTION		ACTION
1	**VERIFY FREEZE FRAME DATA AND DIAGNOSTIC MONITORING TEST RESULTS HAVE BEEN RECORDED** • Have FREEZE FRAME DATA and DIAGNOSTIC MONITORING TEST RESULTS (EVAP system monitor) been recorded?	Yes	Go to the next step.
		No	Record FREEZE FRAME DATA and DIAGNOSTIC MONITORING TEST RESULTS on repair order, then go to the next step.
2	**VERIFY RELATED REPAIR INFORMATION AVAILABILITY** • Check for related Service Bulletins and/or on-line repair information availability. • Is any related repair information available?	Yes	Perform repair or diagnosis according to the available repair information. • If the vehicle is not repaired, go to the next step.
		No	Go to the next step.
3	**VERIFY RELATED PENDING CODE OR STORED DTCS** • Turn ignition switch to OFF then ON (Engine off). • Verify related pending code or stored DTCs. • Is DTC P0443 present?	Yes	Go to appropriate DTC inspection.
		No	Go to the next step.
4	**DETERMINE IF LEAK CONCERN OR BLOCKAGE CONCERN** • Perform EVAP system leak inspection. (See 01–03A–72 Evaporative Emission (EVAP) System Leak Inspection.) • Is system test result failed?	Yes	Go to Step 6.
		No	Go to the next step.
5	**INSPECT PURGE SOLENOID VALVE STUCK CLOSED** • Inspect purge solenoid valve for stuck closed. (See 01–16A–13 PURGE SOLENOID VALVE INSPECTION [L3, AJ].) • Is purge solenoid valve normal?	Yes	Inspect following parts for clogging. • Vacuum hoses between intake manifold to charcoal canister • Charcoal canister Repair or replace part, then go to Step 11.
		No	Replace purge solenoid valve, then go to Step 11.
6	**LOCATE LEAK POINT** • Check the following for leakage using Ultrasonic leak detector. — Charcoal canister — Fuel filler cap — EVAP hoses and pipes — Fuel tank • Is leakage found?	Yes	Repair leakage or replace part, then go to Step 10.
		No	Go to the next step.

STEP	INSPECTION		ACTION
7	**INSPECT EVAP SYSTEM LEAK DETECTION PUMP** • Connect all disconnected connectors and hoses. • Place clamp on EVAP system leak detection pump hose between EVAP system leak detection pump and air filter. • Perform EVAP system leak inspection. (See 01–03A–72 Evaporative Emission (EVAP) System Leak Inspection.) • Is test result failed (red light turns on)?	Yes	Go to Step 9.
		No	Go to the next step.
8	**CONFIRM EVAP SYSTEM LEAK DETECTION PUMP LEAKAGE** • Remove clamp. • Perform EVAP system leak inspection. (See 01–03A–72 Evaporative Emission (EVAP) System Leak Inspection.) • Is test result failed (red light turns on)?	Yes	Replace EVAP system leak detection pump, then go to Step 10.
		No	Go to the next step.
9	**INSPECT FUEL PUMP UNIT INSTALLATION** • Remove fuel tank. • Visually inspect for damage, insufficient sealing or poorly installed pump unit. • Is it normal?	Yes	Go to the next step.
		No	Repair or replace fuel tank or sealing, then go to the next step.
10	**PERFORM LEAK INSPECTION** • Connect all disconnected connectors and hoses. • Perform EVAP system leak inspection. (See 01–03A–72 Evaporative Emission (EVAP) System Leak Inspection.) • Is test result failed (red light turns on)?	Yes	Leakage still exists. Locate leak point and repair. Then go to the next step.
		No	Go to the next step
11	**VERIFY TROUBLESHOOTING OF DTC P0441 COMPLETED** • Start the engine and let it idle. • Clear DTC using the WDS or equivalent. • Turn ignition switch OFF. • Perform "EVAP System Repair Verification Drive Mode". (See 01–02A–13 OBD-II DRIVE MODE [L3]) • Is PENDING CODE for this DTC present?	Yes	Replace PCM, then go to the next step.
		No	Go to the next step.
12	**VERIFY AFTER REPAIR PROCEDURE** • Perform the "After Repair Procedure". (See 01–02A–12 AFTER REPAIR PROCEDURE [L3].) • Is any DTC present?	Yes	Go to the applicable DTC inspection. (See 01–02A–18 DTC TABLE [L3].)
		No	Troubleshooting completed.

DTC P0442 [L3]

E6U010200400W06

DTC P0442	EVAP control system leak detected (small leak)
DETECTION CONDITION	• PCM measures the pump load current (EVAP line pressure) when the specified period has passed after EVAP system is sealed when monitoring conditions are met. If the load does not reach the reference current value within the specified period, PCM determines that the EVAP system has small leak. **MONITORING CONDITION** — IG switch OFF — IAT: **5—35 °C {41—95 °F}** — Battery voltage: **11V or above** — Atmospheric pressure: **72.2 kPa {542 mmHg, 21.33 inHg}** — Fuel tank level: **15—85%** **Diagnostic support note** • This is an intermittent monitor (EVAP system monitor). • MIL illuminates if PCM detects above malfunction condition in two consecutive drive cycles or in one drive cycle while DTC for the same malfunction has been stored in PCM. • PENDING CODE is available if PCM detects the above malfunction condition during first drive cycle. • FREEZE FRAME DATA is available. • DTC is stored in the PCM memory. • DIAGNOSTIC MONITORING TEST RESULTS is available.
POSSIBLE CAUSE	• Purge solenoid valve malfunction • EVAP system leak detection pump malfunction • Charcoal canister malfunction • Fuel filler cap malfunction • Fuel tank malfunction • Poor seal fuel pump unit • Damaged or loose EVAP hose • Damaged EVAP pipe

Diagnostic procedure

STEP	INSPECTION		ACTION
1	**VERIFY FREEZE FRAME DATA AND DIAGNOSTIC MONITORING TEST RESULTS HAVE BEEN RECORDED** • Have FREEZE FRAME DATA and DIAGNOSTIC MONITORING TEST RESULTS (EVAP system monitor) been recorded?	Yes	Go to the next step.
		No	Record FREEZE FRAME DATA and DIAGNOSTIC MONITORING TEST RESULTS on repair order, then go t the next step.
2	**VERIFY RELATED REPAIR INFORMATION AVAILABILITY** • Check for related Service Bulletins and/or on-line repair information availability. • Is any related repair information available?	Yes	Perform repair or diagnosis according to the available repair information. • If the vehicle is not repaired, go to the next step.
		No	Go to the next step.
3	**VERIFY RELATED PENDING CODE OR STORED DTCS** • Turn ignition switch to OFF then ON (Engine off). • Verify related PENDING CODE or stored DTCs. • Is other DTC present?	Yes	Go to appropriate DTC inspection.
		No	Go to the next step.
4	**CLASSIFY INTERMITTENT CONCERN OR CONTINUOUS CONCERN** • Perform EVAP system leak inspection. (See 01–03A–72 Evaporative Emission (EVAP) System Leak Inspection.) • Is system test result failed?	Yes	Go to the next step.
		No	Intermittent concern exists. Inspect purge solenoid valve and EVAP system leak detection pump circuit for intermittent concern. (See 01–03A–7 INTERMITTENT CONCERN TROUBLESHOOTING [L3].)
5	**LOCATE LEAK POINT** • Check leakage for the following using EVAP system tester. — Charcoal canister — Fuel filler cap — EVAP hoses and pipes — Fuel tank • Is leakage found?	Yes	Repair leakage or replace part, then go to Step 10.
		No	Go to the next step.

STEP	INSPECTION		ACTION
6	**INSPECT PURGE SOLENOID VALVE** • Inspect the purge solenoid valve is stuck closed. (See 01–16A–13 PURGE SOLENOID VALVE INSPECTION [L3, AJ].) • Is purge solenoid valve normal?	Yes	Go to the next step.
		No	Replace purge solenoid valve, then go to Step 10.
7	**INSPECT EVAP SYSTEM LEAK DETECTION PUMP** • Connect all disconnected connectors and hoses. • Place clamp on EVAP system leak detection pump hose between EVAP system leak detection pump and air filter. • Perform EVAP system leak inspection. (See 01–03A–72 Evaporative Emission (EVAP) System Leak Inspection.) • Is test result failed?	Yes	Go to Step 9.
		No	Go to the next step.
8	**CONFIRM EVAP SYSTEM LEAK DETECTION PUMP LEAKAGE** • Remove clamp. • Perform EVAP system leak inspection. (See 01–03A–72 Evaporative Emission (EVAP) System Leak Inspection.) • Is test result failed?	Yes	Replace EVAP system leak detection pump, then go to Step 10.
		No	Go to the next step.
9	**INSPECT FUEL PUMP UNIT INSTALLATION** • Remove fuel tank. • Visually inspect for damage, insufficient sealing or poorly installed pump unit. • Is it normal?	Yes	Go to the next step.
		No	Repair or replace fuel tank or sealing, then go to the next step.
10	**PERFORM LEAK INSPECTION** • Connect all disconnected connectors and hoses. • Perform EVAP system leak inspection. (See 01–03A–72 Evaporative Emission (EVAP) System Leak Inspection.) • Is test result failed?	Yes	Leakage still exists. Locate leak point and repair. Then go to the next step.
		No	Go to the next step
11	**VERIFY AFTER REPAIR PROCEDURE** • Perform the "After Repair Procedure". (See 01–02A–12 AFTER REPAIR PROCEDURE [L3].) • Is any DTC present?	Yes	Go to the applicable DTC inspection. (See 01–02A–18 DTC TABLE [L3].)
		No	Troubleshooting completed.

DTC P0443 [L3]

E6U010200400W18

DTC P0443	Purge solenoid valve circuit problem
DETECTION CONDITION	**California emission regulation applicable ATX model** • The PCM monitors the purge solenoid valve control signal voltage and current. If the following conditions are met, the PCM determines that there is the purge solenoid valve control circuit problem. — The PCM turns the purge solenoid valve off, but the voltage of the purge solenoid valve control signal remains low. — The PCM turns the purge solenoid valve on, but the current of the purge solenoid valve control signal remains high. **Diagnostic support note** • This is a continuous monitor (CCM). • The MIL illuminates if the PCM detects the above malfunction condition in two consecutive drive cycles or in one drive cycle while the DTC for the same malfunction has been stored in the PCM. • PENDING CODE is available if the PCM detects the above malfunction condition during first drive cycle. • FREEZE FRAME DATA is available. • The DTC is stored in the PCM memory.
	Except for California emission regulation applicable ATX model • The PCM monitors the input voltages from the purge solenoid valve. If the voltage remains low or high, the PCM determines that the purge solenoid valve circuit has a malfunction. **Diagnostic support note** • This is a continuous monitor (CCM). • The MIL illuminates if the PCM detects the above malfunction condition in two consecutive drive cycles or in one drive cycle while the DTC for the same malfunction has been stored in the PCM. • PENDING CODE is available if the PCM detects the above malfunction condition. • FREEZE FRAME DATA is available. • Are any DTCs is stored in the PCM memory.
POSSIBLE CAUSE	• Purge solenoid valve malfunction • Connector or terminal malfunction • Short to ground in wiring harness between purge solenoid valve terminal A and PCM terminal 2C • Open circuit in wiring harness between main relay and purge solenoid valve terminal B • Open circuit in wiring harness between purge solenoid valve terminal A and PCM terminal 2C • Short to power supply in wiring harness between purge solenoid valve terminal A and PCM terminal 2C • PCM malfunction

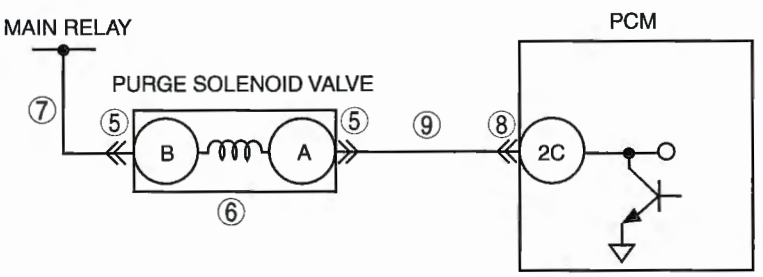

PURGE SOLENOID VALVE
WIRING HARNESS-SIDE CONNECTOR



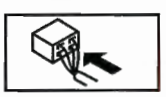

PCM
WIRING HARNESS-SIDE CONNECTOR

2BE	2BA	2AW	2AS	2AO	2AK	2AG	2AC	2Y	2U	2Q	2M	2I	2E	2A
2BF	2BB	2AX	2AT	2AP	2AL	2AH	2AD	2Z	2V	2R	2N	2J	2F	2B
2BG	2BC	2AY	2AU	2AQ	2AM	2AI	2AE	2AA	2W	2S	2O	2K	2G	2C
2BH	2BD	2AZ	2AV	2AR	2AN	2AJ	2AF	2AB	2X	2T	2P	2L	2H	2D

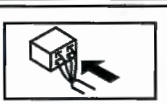

Diagnostic procedure

STEP	INSPECTION		ACTION
1	**VERIFY FREEZE FRAME DATA AND DIAGNOSTIC MONITORING TEST RESULTS HAS BEEN RECORDED** • Has FREEZE FRAME DATA been recorded?	Yes	Go to the next step.
		No	Record the FREEZE FRAME on the repair order, then go the next step.

STEP	INSPECTION		ACTION
2	**VERIFY RELATED REPAIR INFORMATION AVAILABILITY** • Check for related Service Bulletins and/or on-line repair information availability. • Is any related repair information available?	Yes	Perform repair or diagnosis according to the available repair information. • If the vehicle is not repaired, go to the next step.
		No	Go to the next step.
3	**CLASSIFY OPEN CIRCUIT OR SHORT TO GROUND MALFUNCTION** • Disconnect purge solenoid valve tube that is connected to intake manifold. • Connect vacuum pump to purge solenoid valve. • Pump vacuum pump several times and stop. • Wait **a few seconds**. • Is vacuum maintained?	Yes	Go to Step 5.
		No	Go to the next step.
4	**INSPECT PASSAGE CONTROL OF PURGE SOLENOID VALVE** • Turn the ignition switch off. • Disconnect purge solenoid valve connector. • Pump vacuum pump several times and wait **a few seconds**. • Is vacuum maintained?	Yes	Repair or replace wiring harness for short to ground, then go to Step 10.
		No	Replace the purge solenoid valve, then go to Step 10.
5	**INSPECT PURGE SOLENOID VALVE CONNECTOR FOR POOR CONNECTION** • Turn the ignition switch off. • Inspect for poor connection (such as damaged/ pulled-out pins, corrosion). • Is there malfunction?	Yes	Repair or replace the terminal, then go to Step 10.
		No	Go to the next step.
6	**INSPECT PURGE SOLENOID VALVE** • Perform the purge solenoid valve inspection. (See 01–16A–13 PURGE SOLENOID VALVE INSPECTION [L3, AJ]) • Is purge solenoid valve normal?	Yes	Go to the next step.
		No	Replace the purge solenoid valve, then go to Step 10.
7	**INSPECT PURGE SOLENOID VALVE POWER SUPPLY CIRCUIT FOR OPEN CIRCUIT** • Turn the ignition switch to the ON position (Engine off). • Measure the voltage between purge solenoid valve terminal B and body ground. • Is the voltage **B+**?	Yes	Go to the next step.
		No	Repair or replace the wiring harness for an open circuit, then go to Step 10.
8	**INSPECT PCM CONNECTOR FOR POOR CONNECTION** • Turn the ignition switch off. • Disconnect the PCM connector. • Inspect for poor connection (such as damaged/ pulled-out pins, corrosion). • Is there malfunction?	Yes	Repair or replace the terminal, then go to Step 10.
		No	Go to the next step.
9	**INSPECT PURGE SOLENOID VALVE CONTROL CIRCUIT** • Turn the ignition switch to the ON position (Engine off). • Measure the voltage between purge solenoid valve terminal A (wiring harness-side) and body ground. • Is the voltage **B+**?	Yes	Repair or replace the wiring harness for short to power supply, then go to the next step.
		No	Inspect the harness at between purge solenoid valve terminal A (wiring harness-side) and PCM terminal 2C (wiring harness-side) for open or short circuit. • If there is continuity, go to the next step. • If there is no continuity, repair or replace the wiring harness for an open circuit, then go to the next step.
10	**VERIFY TROUBLESHOOTING OF DTC P0443 COMPLETED** • Make sure to reconnect all disconnected connectors. • Start the engine. • Is the PENDING CODE for this DTC present?	Yes	Replace the PCM, then go to the next step. (See 01–40A–9 PCM REMOVAL/INSTALLATION [L3].)
		No	Go to the next step.
11	**VERIFY AFTER REPAIR PROCEDURE** • Perform the "AFTER REPAIR PROCEDURE". (See 01–02A–12 AFTER REPAIR PROCEDURE [L3].) • Are any DTC present?	Yes	Go to the applicable DTC troubleshooting. (See 01–02A–18 DTC TABLE [L3].)
		No	Troubleshooting completed.

DTC P0446 [L3]

E6U010200400W08

DTC P0446	Change over valve (COV) (EVAP system leak detection pump) stuck close
DETECTION CONDITION	• The PCM monitors pump load current (EVAP line pressure), while EVAP leak monitor is operating. When the decrease in pump load current is less than the specification after the reference current value has bee. obtained, the PCM determines change over valve (COV) in EVAP system leak detection pump has a malfunction. **Diagnostic support note** • This is an intermittent monitor (CCM). • MIL illuminates if PCM detects above malfunction condition in two consecutive drive cycles or in one drive cycle while DTC for the same malfunction has been stored in PCM. • PENDING CODE is available if PCM detects the above malfunction condition during first drive cycle. • FREEZE FRAME DATA is available. • DTC is stored in the PCM memory.
POSSIBLE CAUSE	• Damaged COV (in EVAP system leak detection pump.) • Short to power circuit between the EVAP system leak detection pump terminal C and PCM terminal • Damaged PCM

Diagnostic procedure

STEP	INSPECTION		ACTION
1	**VERIFY FREEZE FRAME DATA AND DIAGNOSTIC MONITORING TEST RESULTS HAVE BEEN RECORDED** • Have FREEZE FRAME DATA and DIAGNOSTIC MONITORING TEST RESULTS (EVAP system related) been recorded?	Yes	Go to the next step.
		No	Record FREEZE FRAME DATA and DIAGNOSTIC MONITORING TEST RESULTS on repair order, then go to the next step.
2	**VERIFY RELATED REPAIR INFORMATION AVAILABILITY** • Check for related Service Bulletins and/or on-line repair information availability. • Is any related repair information available?	Yes	Perform repair or diagnostic according to the available repair information. • If the vehicle is not repaired, then go to the next step.
		No	Go to the next step.
3	**CHECK COV CONTROL (EVAP SYSTEM LEAK DETECTION PUMP CIRCUIT FOR SHORT TO POWER)** • Turn ignition switch to ON (engine OFF). • Disconnect the EVAP system leak detection pump connector. • Measure the voltage between EVAP system leak detection pump connector terminal C (wiring harness-side) and body ground. • Is the voltage **B+**?	Yes	Repair or replace the wiring harness, then go to Step 5.
		No	Go to the next step.
4	**INSPECT COV (EVAP SYSTEM LEAK DETECTION PUMP)** • Inspect the EVAP system leak detection pump. (See 01–16A–11 EVAPORATIVE EMISSION (EVAP) SYSTEM LEAK DETECTION PUMP INSPECTION [L3, AJ].) • Is the COV (EVAP system leak detection pump) normal?	Yes	Go to the next step.
		No	Replace the EVAP system leak detection pump, then go to the next step.

STEP	INSPECTION		ACTION
5	**VERIFY TROUBLESHOOTING OF DTC P0446 COMPLETED** • Make sure to reconnect all disconnected connectors. • Turn the ignition switch to the ON position (Engine off). • Clear the DTC from the PCM memory using the WDS or equivalent. • Perform EVAP system test using the WDS or equivalent. (See 01–03A–72 Evaporative Emission (EVAP) System Leak Inspection.) • Is same DTC present? **Note** • If EVAP system test function is not available, take following procedure. — Perform "EVAP System Repair Verification Drive Mode". (See 01–02A–13 OBD-II DRIVE MODE [L3]) — Is the PENDING CODE for this DTC present?	Yes	Replace the PCM, then go to the next step.
		No	Go to the next step.
6	**VERIFY AFTER REPAIR PROCEDURE** • Perform "AFTER REPAIR PROCEDURE". (See 01–02A–12 AFTER REPAIR PROCEDURE [L3].) • Is any DTC present?	Yes	Go to the applicable DTC inspection. (See 01–02A–18 DTC TABLE [L3].)
		No	Troubleshooting completed.

DTC P0455 [L3]

E6U010200400W09

DTC P0455	EVAP control system leak detected (gross leak)
DETECTION CONDITION	• PCM measures the pump load current (EVAP line pressure) when the specified period has passed after EVAP system is sealed when monitoring conditions are met. If the load does not reach the reference current value within the specified period, PCM determines that the EVAP system has gross leak. **MONITORING CONDITION** — IG switch OFF — IAT: **5—35 °C {41—95 °F}** — Battery voltage: **11V or above** — Atmospheric pressure: **72.2 kPa {542 mmHg, 21.33 inHg}** — Fuel tank level: **15—85%** **Diagnostic support note** • This is an intermittent monitor (EVAP system monitor). • MIL illuminates if PCM detects above malfunction condition in two consecutive drive cycles or in one drive cycle while DTC for the same malfunction has been stored in PCM. • PENDING CODE is available if PCM detects the above malfunction condition during first drive cycle. • FREEZE FRAME DATA is available. • DTC is stored in the PCM memory. • DIAGNOSTIC MONITORING TEST RESULTS is available.
POSSIBLE CAUSE	• Purge solenoid valve malfunction • EVAP system leak detection pump malfunction • Loose, missing or defective fuel filler cap • Charcoal canister malfunction • Fuel tank malfunction • Damaged or loose EVAP hose • Poor connection or damaged vacuum hose

Diagnostic procedure

STEP	INSPECTION		ACTION
1	**VERIFY FREEZE FRAME DATA AND DIAGNOSTIC MONITORING TEST RESULTS HAVE BEEN RECORDED** • Have FREEZE FRAME DATA and DIAGNOSTIC MONITORING TEST RESULTS (EVAP system monitor related) been recorded?	Yes	Go to the next step.
		No	Record FREEZE FRAME DATA and DIAGNOSTIC MONITORING TEST RESULTS on repair order, then go to the next step.
2	**VERIFY RELATED REPAIR INFORMATION AVAILABILITY** • Check for related Service Bulletins and/or on-line repair information availability. • Is any related repair information available?	Yes	Perform repair or diagnosis according to the available repair information. • If the vehicle is not repaired, go to the next step.
		No	Go to the next step.
3	**VERIFY RELATED PENDING CODE OR STORED DTCS** • Turn ignition switch to OFF then ON (Engine off). • Verify related pending code or stored DTCs. • Is DTCs P0443 and/or P0446 present?	Yes	Go to appropriate DTC troubleshooting procedure.
		No	Go to the next step.
4	**CLASSIFY INTERMITTENT CONCERN OR CONTINUOUS CONCERN** • Perform EVAP System Leak Inspection. (See 01–03A–72 Evaporative Emission (EVAP) System Leak Inspection.) • Is test result failed?	Yes	Go to the next step.
		No	Intermittent concern exists. Inspect purge solenoid valve and EVAP system leak detection pump circuit for intermittent concern. (See 01–03A–7 INTERMITTENT CONCERN TROUBLESHOOTING [L3].)
5	**INSPECT FUEL FILLER CAP** • Verify fuel-filler cap is not either disconnected, loose or damaged. • Is it normal? **Note** • When fuel-filler caps other than OEM caps are attached, it is considered malfunction.	Yes	Go to the next step.
		No	Retighten fuel-filler cap or replace it, if it is damaged. Go to Step 17.
6	**INSPECT PURGE SOLENOID VALVE FOR BEING STUCK** • Inspect purge solenoid valve. • Is purge solenoid valve normal?	Yes	Go to the next step.
		No	Replace purge solenoid valve, then go to Step 17.
7	**INSPECT COV (EVAP SYSTEM LEAK DETECTION PUMP)** • Perform EVAP system leak detection pump inspection. • Is COV (EVAP leak detection pump) normal?	Yes	Go to the next step.
		No	Replace EVAP system leak detection pump, then go to Step 17.
8	**DETERMINE IF EVAP CONTROL SYSTEM FOR LEAKAGE OR BLOCKAGE** **Note** • If EVAP tester is not available, then go to the next step. • Perform EVAP System Leak Inspection. (See 01–03A–72 Evaporative Emission (EVAP) System Leak Inspection.) • Is system test normal?	Yes	Repair or replace faulty area, then go to Step 17.
		No	Go to the next step.
9	**INSPECT LEAKAGE OF CHARCOAL CANISTER TO FUEL PUMP** • Disconnect fuel tank side vacuum hose at charcoal canister. • Apply vacuum **1.7 kPa {13 mmHg, 0.5 inHg}** to disconnected vacuum hose using vacuum pump. • Does vacuum hold for minimum of **2 min**?	Yes	Go to Step 13.
		No	Go to the next step.

STEP	INSPECTION		ACTION
10	**VERIFY POOR CONNECTION OF VACUUM HOSE** • Verify vacuum hose installation condition between fuel tank and charcoal canister. • Is poor connection detected?	Yes	Connect vacuum hose correctly, then go to Step 17.
		No	Go to the next step.
11	**INSPECT FUEL TANK INSTALLATION** • Remove fuel tank. • Visually inspect for damage, insufficient sealing or poorly installed fuel pump unit. • Is it normal?	Yes	Go to the next step.
		No	Repair or replace fuel tank or sealing, then go to Step 17.
12	**INSPECT FUEL TANK** • Inspect fuel tank. • Is it normal?	Yes	Replace vacuum hose from charcoal canister and fuel tank, then go to the next step.
		No	Replace fuel tank, then go to the next step.
13	**INSPECT LEAKAGE FROM CHARCOAL CANISTER TO PURGE SOLENOID VALVE** • Disconnect purge solenoid valve side vacuum hose at charcoal canister. • Apply vacuum **3.3 kPa {25 mmHg, 1.0 inHg}** to disconnected vacuum hose using vacuum pump. • Does vacuum hold for minimum of **2 min**?	Yes	Go to Step 17
		No	Go to the next step.
14	**VERIFY POOR CONNECTION OF VACUUM HOSE** • Verify vacuum hose installation condition between purge solenoid valve and charcoal canister. • Is poor connection detected?	Yes	Connect vacuum hose correctly, then go to Step 17.
		No	Go to the next step.
15	**INSPECT PURGE SOLENOID VALVE FOR DAMAGE OR AIR LEAK** • Remove purge solenoid valve and inspect for damage and air leak. • Is it normal?	Yes	Go to the next step.
		No	Replace purge solenoid valve, then go to Step 17.
16	**INSPECT CHARCOAL CANISTER** • Remove charcoal canister and inspect for plugging, damage and pinhole. • Is it normal?	Yes	Replace vacuum hose from charcoal canister to purge solenoid valve, then go to the next step.
		No	Replace charcoal canister, then go to the next step.
17	**PERFORM LEAK INSPECTION** • Connect all disconnected connectors. • Perform EVAP System Leak Inspection. (See 01–03A–72 Evaporative Emission (EVAP) System Leak Inspection.) • Is test result failed?	Yes	Leakage still exists. Locate leak point and repair. Then go to the next step.
		No	Go to the next step.
18	**VERIFY AFTER REPAIR PROCEDURE** • Perform the "After Repair Procedure". (See 01–02A–12 AFTER REPAIR PROCEDURE [L3].) • Is any DTC present?	Yes	Go to the applicable DTC inspection. (See 01–02A–18 DTC TABLE [L3].)
		No	Troubleshooting completed.

DTC P0456 [L3]

E6U010200400W10

DTC P0456	EVAP control system leak detected (very small leak)
DETECTION CONDITION	• PCM measure the pump load current (EVAP line pressure) when a specified period has passed after EVAP system is sealed when monitoring conditions are met. If the load does not reach the reference load value c rate of the load increase lower than the specified within a specified period, PCM determines that the EVAP system has very small leak. **MONITORING CONDITION** — IG switch OFF — IAT: **5—35 °C {41—95 °F}** — Battery voltage: **11V or above** — Atmospheric pressure: **72.2 kPa {542 mmHg, 21.33 inHg}** — Fuel tank level: **15—85%** **Diagnostic support note** • This is an intermittent monitor (EVAP system monitor). • MIL illuminates if PCM detects above malfunction condition in two consecutive drive cycles or in one drive cycle while DTC for the same malfunction has been stored in PCM. • PENDING CODE is available if PCM detects the above malfunction condition during first drive cycle. • FREEZE FRAME DATA is available. • DTC is stored in the PCM memory. • DIAGNOSTIC MONITORING TEST RESULTS is available.
POSSIBLE CAUSE	• Purge solenoid valve malfunction • Change over valve (COV) in EVAP system leak detection pump malfunction • Charcoal canister malfunction • Fuel cap malfunction • Fuel tank malfunction • Poor seal fuel pump unit • Damaged or loose EVAP hose • Damaged EVAP pipe

Diagnostic procedure

STEP	INSPECTION		ACTION
1	**VERIFY FREEZE FRAME DATA AND DIAGNOSTIC MONITORING TEST RESULTS HAVE BEEN RECORDED** • Have FREEZE FRAME DATA and DIAGNOSTIC MONITORING TEST RESULTS (EVAP system monitor related) been recorded?	Yes	Go to the next step.
		No	Record FREEZE FRAME DATA and DIAGNOSTIC MONITORING TEST RESULTS on repair order, then go to the next step.
2	**VERIFY RELATED REPAIR INFORMATION AVAILABILITY** • Check for related Service Bulletins and/or on-line repair information availability. • Is any related repair information available?	Yes	Perform repair or diagnosis according to the available repair information. • If the vehicle is not repaired, go to the next step.
		No	Go to the next step.
3	**VERIFY RELATED PENDING CODE OR STORED DTCS** • Turn ignition switch to OFF then ON (Engine off). • Verify related PENDING CODE or stored DTCs. • Is other DTC present?	Yes	Go to appropriate DTC inspection.
		No	Go to the next step.
4	**CLASSIFY INTERMITTENT CONCERN OR CONTINUOUS CONCERN** • Perform EVAP system leak inspection. (See 01–03A–72 Evaporative Emission (EVAP) System Leak Inspection.) • Is system test result failed?	Yes	Go to the next step.
		No	Intermittent concern exists. Inspect purge solenoid valve and EVAP system leak detection pump circuit for intermittent concern. (See 01–03A–7 INTERMITTENT CONCERN TROUBLESHOOTING [L3].)
5	**LOCATE LEAK POINT** • Check leakage for the following using EVAP system tester. — Charcoal canister — Fuel filler cap — EVAP hoses and pipes — Fuel tank • Is leakage found?	Yes	Repair leakage or replace part, then go to Step 10.
		No	Go to the next step.

STEP	INSPECTION		ACTION
6	**INSPECT PURGE SOLENOID VALVE** • Inspect if purge solenoid valve is stuck closed. (See 01–16A–13 PURGE SOLENOID VALVE INSPECTION [L3, AJ].) • Is purge solenoid valve normal?	Yes	Go to the next step.
		No	Replace purge solenoid valve, then go to Step 10.
7	**INSPECT EVAP SYSTEM LEAK DETECTION PUMP** • Connect all disconnected connectors and hoses. • Place clamp on EVAP system leak detection pump hose between EVAP system leak detection pump and air filter. • Perform EVAP system leak inspection. (See 01–03A–72 Evaporative Emission (EVAP) System Leak Inspection.) • Is test result failed?	Yes	Go to Step 9.
		No	Go to the next step.
8	**CONFIRM EVAP SYSTEM LEAK DETECTION PUMP LEAKAGE** • Remove clamp. • Perform EVAP system leak inspection. (See 01–03A–72 Evaporative Emission (EVAP) System Leak Inspection.) • Is test result failed?	Yes	Replace EVAP system leak detection pump, then go to Step 10.
		No	Go to the next step.
9	**INSPECT FUEL PUMP UNIT INSTALLATION** • Remove fuel tank. • Visually inspect for damage, insufficient sealing or poorly installed pump unit. • Is it normal?	Yes	Go to the next step.
		No	Repair or replace fuel tank or sealing, then go to the next step.
10	**PERFORM LEAK INSPECTION** • Connect all disconnected connectors and hoses. • Perform EVAP system leak inspection. (See 01–03A–72 Evaporative Emission (EVAP) System Leak Inspection.) • Is test result failed?	Yes	Leakage still exists. Locate leak point and repair. Then go to the next step.
		No	Go to the next step.
11	**VERIFY AFTER REPAIR PROCEDURE** • Perform the "After Repair Procedure". (See 01–02A–12 AFTER REPAIR PROCEDURE [L3].) • Is any DTC present?	Yes	Go to the applicable DTC inspection. (See 01–02A–18 DTC TABLE [L3].)
		No	Troubleshooting completed.

DTC P0461 [L3]

E6U010200400W11

DTC P0461	Fuel gauge sender unit circuit range/performance
DETECTION CONDITION	• PCM monitors fuel level voltage difference before and after PCM-calculated fuel consumption has reached **more than 24.5 L {25.9 US qt., 21.6 Imp qt.}**. If the difference is **less than 5%**, the PCM determines that fuel gauge sender unit range/performance is in error. **Diagnostic support note** • This is a continuous monitor (CCM). • MIL illuminates if PCM detects above malfunction condition in two consecutive drive cycles or in one drive cycle while DTC for the same malfunction has been stored in PCM. • PENDING CODE is available if PCM detects the above malfunction condition during first drive cycle. • FREEZE FRAME DATA is available. • DTC is stored in the PCM memory.
POSSIBLE CAUSE	• Fuel gauge sender unit malfunction • Instrument cluster malfunction • PCM malfunction

Diagnostic procedure

STEP	INSPECTION		ACTION
1	**VERIFY FREEZE FRAME DATA HAS BEEN RECORDED** • Has FREEZE FRAME DATA been recorded?	Yes	Go to the next step.
		No	Record FREEZE FRAME DATA on repair order, then go to the next step.
2	**VERIFY RELATED REPAIR INFORMATION AVAILABILITY** • Check for related Service Bulletins and/or on-line repair information availability. • Is any related repair information available?	Yes	Perform repair or diagnosis according to the available repair information. • If the vehicle is not repaired, go to the next step.
		No	Go to the next step.
3	**INSPECT FUEL GAUGE SENDER UNIT** • Turn the ignition switch off. • Inspect fuel gauge sender unit. (See 09–22–23 FUEL GAUGE SENDER UNIT INSPECTION [EXCEPT AWD].) • Is fuel gauge sender unit normal?	Yes	Replace PCM, then go to the next step.
		No	Repair or replace fuel gauge sender unit, then go to the next step.
4	**VERIFY AFTER REPAIR PROCEDURE** • Perform the "After Repair Procedure". (See 01–02A–12 AFTER REPAIR PROCEDURE [L3].) • Is any DTC present?	Yes	Go to the applicable DTC inspection. (See 01–02A–18 DTC TABLE [L3].)
		No	Troubleshooting completed.

DTC P0462 [L3]

E6U010200400W12

DTC P0462	Fuel gauge sender unit circuit low input
DETECTION CONDITION	• The PCM monitors the signal of the fuel level and fuel gauge sender unit output voltage from instrument cluster. If the PCM detects fuel level or fuel gauge sender unit output voltage is too low, the PCM determines that the fuel gauge sender unit circuit has a malfunction. **Diagnostic support note** • This is a continuous monitor (CCM). • MIL illuminates if PCM detects above malfunction condition in two consecutive drive cycles or in one drive cycle while DTC for the same malfunction has been stored in PCM. • PENDING CODE is available if PCM detects the above malfunction condition during first drive cycle. • FREEZE FRAME DATA is available. • DTC is stored in the PCM memory.
POSSIBLE CAUSE	• Instrument cluster malfunction • Fuel gauge sender unit malfunction • PCM malfunction

Diagnostic procedure

STEP	INSPECTION		ACTION
1	**VERIFY FREEZE FRAME DATA HAS BEEN RECORDED** • Has FREEZE FRAME DATA been recorded?	Yes	Go to the next step.
		No	Record FREEZE FRAME DATA on repair order, then go to the next step.
2	**VERIFY RELATED REPAIR INFORMATION AVAILABILITY** • Check for related Service Bulletins and/or on-line repair information availability. • Is any related repair information available?	Yes	Perform repair or diagnosis according to the available repair information. • If the vehicle is not repaired, go to the next step.
		No	Go to the next step.
3	**INSPECT INSTRUMENT CLUSTER** • Perform "INSTRUMENT CLUSTER INPUT/OUTPUT CHECK MODE" procedure. (See 09–22–7 INSTRUMENT CLUSTER INPUT/OUTPUT CHECK MODE.) • Is there any malfunction?	Yes	Repair or replace suspected malfunction, then go to Step 4.
		No	Go to the next step.
4	**VERIFY TROUBLESHOOTING OF DTC P0462 COMPLETED** • Make sure to reconnect all disconnected connectors. • Turn ignition switch to ON (Engine off). • Clear the DTC from the memory using the WDS or equivalent. • Start the engine. • Is PENDING CODE for this DTC present?	Yes	Replace PCM, then go to the next step.
		No	Go to the next step.
5	**VERIFY AFTER REPAIR PROCEDURE** • Perform the "After Repair Procedure". (See 01–02A–12 AFTER REPAIR PROCEDURE [L3].) • Is any DTC present?	Yes	Go to the applicable DTC inspection. (See 01–02A–18 DTC TABLE [L3].)
		No	Troubleshooting completed.

DTC P0463 [L3]

E6U010200400W13

DTC P0463	Fuel gauge sender unit circuit high input
DETECTION CONDITION	• The PCM monitors the signal of the fuel level and fuel gauge sender unit output voltage from instrument cluster. If the PCM detects fuel level or fuel gauge sender unit output voltage is too high, the PCM determines that the fuel gauge sender unit circuit has a malfunction. **Diagnostic support note** • This is a continuous monitor (CCM). • MIL illuminates if PCM detects above malfunction condition in two consecutive drive cycles or in one drive cycle while DTC for the same malfunction has been stored in PCM. • PENDING CODE is available if PCM detects the above malfunction condition during first drive cycle. • FREEZE FRAME DATA is available. • DTC is stored in the PCM memory.
POSSIBLE CAUSE	• Instrument cluster malfunction • Fuel gauge sender unit malfunction • PCM malfunction

Diagnostic procedure

STEP	INSPECTION		ACTION
1	**VERIFY FREEZE FRAME DATA HAS BEEN RECORDED** • Has FREEZE FRAME DATA been recorded?	Yes	Go to the next step.
		No	Record FREEZE FRAME DATA on repair order, then go to the next step.
2	**VERIFY RELATED REPAIR INFORMATION AVAILABILITY** • Check for related Service Bulletins and/or on-line repair information availability. • Is any related repair information available?	Yes	Perform repair or diagnosis according to the available repair information. • If the vehicle is not repaired, go to the next step.
		No	Go to the next step.
3	**INSPECT INSTRUMENT CLUSTER** • Perform "INSTRUMENT CLUSTER INPUT/OUTPUT CHECK MODE" procedure. (See 09–22–7 INSTRUMENT CLUSTER INPUT/OUTPUT CHECK MODE.) • Is there any malfunction?	Yes	Repair or replace suspected malfunction, then go to Step 4.
		No	Go to the next step.
4	**VERIFY TROUBLESHOOTING OF DTC P0463 COMPLETED** • Make sure to reconnect all disconnected connectors. • Turn ignition switch to ON (Engine off). • Clear the DTC from the memory using the WDS or equivalent. • Start the engine. • Is PENDING CODE for this DTC present?	Yes	Replace PCM, then go to the next step.
		No	Go to the next step.
5	**VERIFY AFTER REPAIR PROCEDURE** • Perform the "After Repair Procedure". (See 01–02A–12 AFTER REPAIR PROCEDURE [L3].) • Is any DTC present?	Yes	Go to the applicable DTC inspection. (See 01–02A–18 DTC TABLE [L3].)
		No	Troubleshooting completed.

DTC P0480 [L3]

E6U010200400W19

DTC P0480	Cooling fan relay No.1 control circuit malfunction
DETECTION CONDITION	**California emission regulation applicable ATX model** • The PCM monitors the cooling fan relay No.1 control signal voltage and current. If the following conditions are met, the PCM determines that there is the cooling fan relay No.1 control circuit problem. — The PCM turns the cooling fan relay No.1 off, but the voltage of the cooling fan relay No.1 control signal remains low. — The PCM turns the cooling fan relay No.1 on, but the current of the cooling fan relay No.1 control signal remains high. **Diagnostic support note** • This is a continuous monitor (Other). • The MIL does not illuminate. • PENDING CODE is available if the PCM detects the above malfunction condition. • FREEZE FRAME DATA is available. • The DTC is stored in the PCM memory.
	Except for California emission regulation applicable ATX model • PCM monitors cooling fan relay No.1 control signal. If voltage remains low or high, PCM determines that fan relay No.1 circuit has a malfunction. **Diagnostic support note** • This is a continuous monitor (Other). • MIL does not illuminate. • PENDING CODE is available if PCM detects the above malfunction condition. • FREEZE FRAME DATA is not available. • DTC is stored in the PCM memory.
POSSIBLE CAUSE	• Cooling fan relay No.1 malfunction • Connector or terminal malfunction • Open circuit in wiring harness between ignition switch and cooling fan relay No.1 terminal E • Open circuit in wiring harness between cooling fan relay No.1 terminal A and PCM terminal 1M • Short to ground in wiring harness between cooling fan relay No.1 terminal A and PCM terminal 1M • Short to power supply in wiring harness between cooling fan relay No.1 terminal A and PCM terminal 1M • PCM malfunction

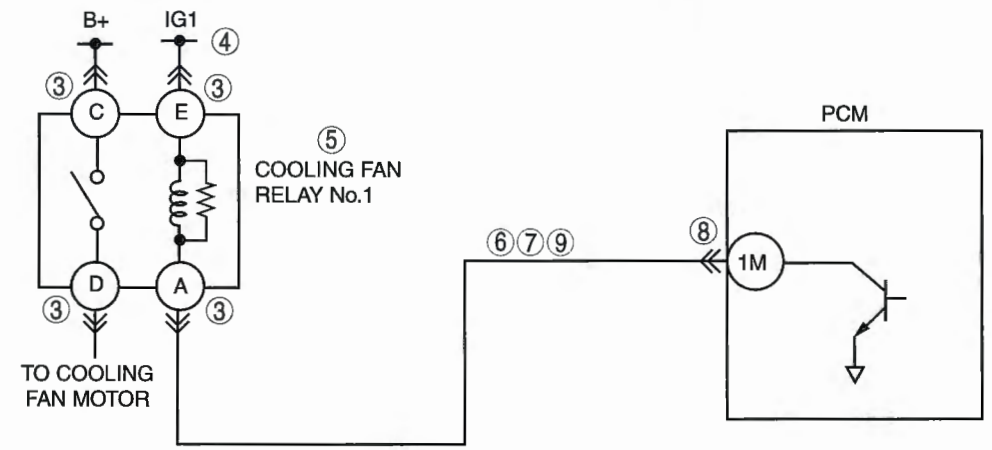

COOLING FAN RELAY
HARNESS SIDE CONNECTOR

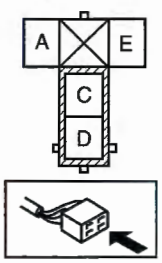

PCM
HARNESS SIDE CONNECTOR

1BE	1BA	1AW	1AS	1AO	1AK	1AG	1AC	1Y	1U	1Q	1M	1I	1E	1A
1BF	1BB	1AX	1AT	1AP	1AL	1AH	1AD	1Z	1V	1R	1N	1J	1F	1B
1BG	1BC	1AY	1AU	1AQ	1AM	1AI	1AE	1AA	1W	1S	1O	1K	1G	1C
1BH	1BD	1AZ	1AV	1AR	1AN	1AJ	1AF	1AB	1X	1T	1P	1L	1H	1D

Diagnostic procedure

STEP	INSPECTION		ACTION
1	**VERIFY FREEZE FRAME DATA AND DIAGNOSTIC MONITORING TEST RESULTS HAS BEEN RECORDED** • Has FREEZE FRAME DATA been recorded?	Yes	Go to the next step.
		No	Record the FREEZE FRAME on the repair order, then go t the next step.
2	**VERIFY RELATED REPAIR INFORMATION AVAILABILITY** • Check for related Service Bulletins and/or on-line repair information availability. • Is any related repair information available?	Yes	Perform repair or diagnosis according to the available repair information. • If the vehicle is not repaired, go to the next step.
		No	Go to the next step.
3	**INSPECT COOLING FAN RELAY NO.1 CONNECTOR FOR POOR CONNECTION** • Turn the ignition switch off. • Disconnect cooling fan relay No.1 connector. • Inspect for poor connection (such as damaged, pulled-out pins, corrosion, etc.). • Is there any malfunction?	Yes	Repair or replace the terminal and/or connector, then go to Step 10.
		No	Go to the next step.
4	**INSPECT COOLING FAN RELAY NO.1 POWER CIRCUIT FOR OPEN CIRCUIT** • Turn ignition switch to ON (Engine off). • Measure voltage between cooling fan relay No.1 terminal E (harness side) and body ground. • Is voltage **B+**?	Yes	Go to the next step.
		No	Replace or replace the wiring harness for an open circuit, then go to Step 10.
5	**INSPECT COOLING FAN RELAY NO.1** • Inspect cooling fan relay No.1. (See 09–21–7 RELAY INSPECTION.) • Is cooling fan relay No.1 normal?	Yes	Go to the next step.
		No	Replace the cooling fan relay No.1, then go to Step 10.
6	**INSPECT COOLING FAN RELAY NO.1 CONTROL CIRCUIT FOR SHORT TO POWER SUPPLY** • Measure voltage between cooling fan relay No.1 terminal A (wiring harness-side) and body ground. • Is voltage **B+**?	Yes	Repair or replace the wiring harness for short to power supply, then go to Step 10.
		No	Go to the next step.
7	**INSPECT COOLING FAN RELAY NO.1 CONTROL CIRCUIT FOR SHORT TO GROUND** • inspect for continuity between cooling fan relay No.1 terminal A (harness side) and body ground. • Is there continuity?	Yes	Repair or replace the wiring harness for an open circuit, then go to Step 10.
		No	Go to the next step.
8	**INSPECT PCM CONNECTOR FOR POOR CONNECTION** • Turn the ignition switch off. • Disconnect PCM connector. • Inspect for poor connection (such as damaged/ pulled-out pins, corrosion). • Is there any malfunction?	Yes	Repair or replace the terminal and/or connector, then go to Step 10.
		No	Go to the next step.
9	**INSPECT COOLING FAN RELAY NO.1 CONTROL CIRCUIT FOR OPEN CIRCUIT** • inspect for continuity between cooling fan relay No.1 terminal A (wiring harness-side) and PCM terminal 1M (wiring harness-side). • Is there continuity?	Yes	Go to the next step.
		No	Repair or replace the wiring harness for an open circuit, then go to the next step.
10	**VERIFY TROUBLESHOOTING OF DTC P0480 COMPLETED** • Make sure to reconnect all disconnected connectors. • Clear the DTC from the PCM memory using the WDS or equivalent. • Perform the KOEO or KOER self-test. (See 01–02A–12 KOEO/KOER SELF TEST [L3].) • Is the DTC P0480 present?	Yes	Replace the PCM, then go to the next step. (See 01–40A–9 PCM REMOVAL/INSTALLATION [L3].)
		No	Go to the next step.
11	**VERIFY AFTER REPAIR PROCEDURE** • Perform the "After Repair Procedure". (See 01–02A–12 AFTER REPAIR PROCEDURE [L3].) • Is any DTC present?	Yes	Go to the applicable DTC inspection. (See 01–02A–18 DTC TABLE [L3].)
		No	Troubleshooting completed.

DTC P0481 [L3]

E6U010200400W20

DTC P0481	Cooling fan relay No.2 and No.3 control circuit malfunction
DETECTION CONDITION	**California emission regulation applicable ATX model** • The PCM monitors the cooling fan relay No.2 and No.3 control signal voltage and current. If the following conditions are met, the PCM determines that there is the cooling fan relay No.2 and No.3 control circuit problem. — The PCM turns the cooling fan relay No.2 and No.3 off, but the voltage of the cooling fan relay No.2 and No.3 control signal remains low. — The PCM turns the cooling fan relay No.2 and No.3 on, but the current of the cooling fan relay No.2 and No.3 control signal remains high. **Diagnostic support note** • This is a continuous monitor (Other). • The MIL does not illuminate. • PENDING CODE is available if the PCM detects the above malfunction condition. • FREEZE FRAME DATA is available. • The DTC is stored in the PCM memory.
	Except for California emission regulation applicable ATX model • PCM monitors cooling fan relay No.2 and No.3 control signal. If voltage remains low or high, PCM determines that fan relay No.2 and No.3 circuit has a malfunction. **Diagnostic support note** • This is a continuous monitor (Other). • MIL does not illuminate. • PENDING CODE is available if PCM detects the above malfunction condition. • FREEZE FRAME DATA is not available. • DTC is stored in the PCM memory.
POSSIBLE CAUSE	• Cooling fan relay No.2 malfunction • Cooling fan relay No.3 malfunction • Connector or terminal malfunction • Open circuit in wiring harness between ignition switch and cooling fan relay No.2 terminal A • Open circuit in wiring harness between cooling fan relay No.2 terminal E and PCM terminal 1R • Open circuit in wiring harness between ignition switch and cooling fan relay No.3 terminal E • Open circuit in wiring harness between cooling fan relay No.3 terminal A and PCM terminal 1R • Short to ground in wiring harness between cooling fan relay No.2 terminal E and PCM terminal 1R • Short to power supply in wiring between cooling fan relay No.2 terminal E and PCM terminal 1R • Short to ground in wiring harness between cooling fan relay No.3 terminal A and PCM terminal 1R • Short to power supply in wiring harness between cooling fan relay No.3 terminal A and PCM terminal 1R • PCM malfunction

DTC P0481	Cooling fan relay No.2 and No.3 control circuit malfunction

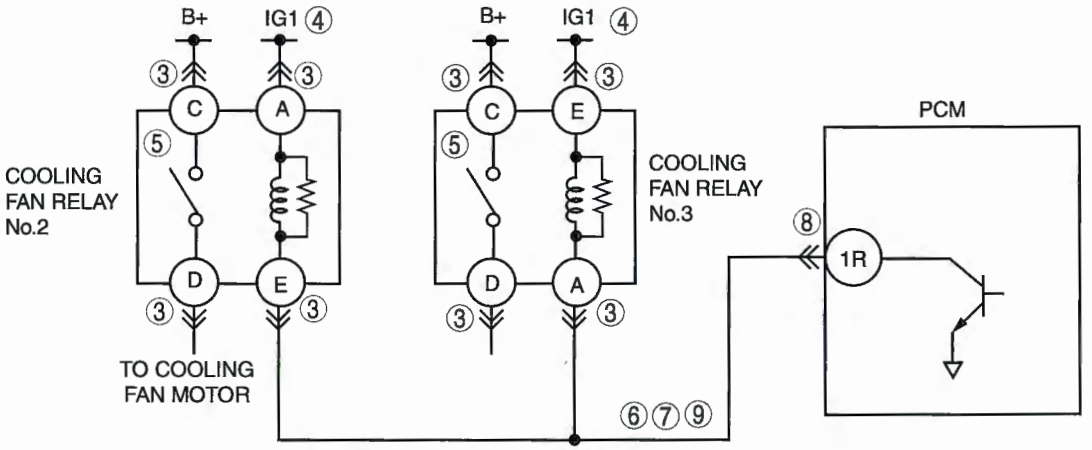

COOLING FAN RELAY HARNESS SIDE CONNECTOR

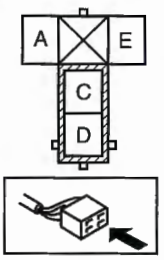

PCM HARNESS SIDE CONNECTOR

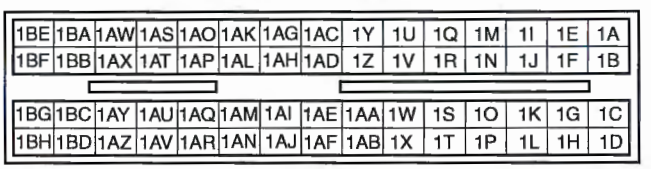

Diagnostic procedure

STEP	INSPECTION		ACTION
1	**VERIFY FREEZE FRAME DATA AND DIAGNOSTIC MONITORING TEST RESULTS HAS BEEN RECORDED** • Has FREEZE FRAME DATA been recorded?	Yes	Go to the next step.
		No	Record the FREEZE FRAME on the repair order, then go to the next step.
2	**VERIFY RELATED REPAIR INFORMATION AVAILABILITY** • Check for related Service Bulletins and/or on-line repair information availability. • Is any related repair information available?	Yes	Perform repair or diagnosis according to the available repair information. • If the vehicle is not repaired, go to the next step.
		No	Go to the next step.
3	**INSPECT COOLING FAN RELAY NO.2 AND NO.3 CONNECTOR FOR POOR CONNECTION** • Turn the ignition switch off. • Disconnect cooling fan relay No.2 and 3 connector. • Inspect for poor connection (such as damaged/ pulled-out pins, corrosion). • Is there any malfunction?	Yes	Repair or replace the terminal and/or connector, then go to Step 10.
		No	Go to the next step.
4	**INSPECT COOLING FAN RELAY NO.2 AND NO.3 POWER CIRCUIT FOR OPEN CIRCUIT** • Turn ignition switch to the ON position (Engine off). • Measure voltage between following terminals and body ground. — Cooling fan relay No.2 terminal A (harness side) — Cooling fan relay No.3 terminal E (harness side) • Is voltage **B+**?	Yes	Go to the next step.
		No	Replace or replace the wiring harness for an open circuit, then go to Step 10.

STEP	INSPECTION		ACTION
5	**INSPECT COOLING FAN RELAY NO.2 AND NO.3** • Inspect cooling fan relay No.2 and No.3. (See 09–21–7 RELAY INSPECTION.) • Are cooling fan relay No.2 and No.3 normal?	Yes	Go to the next step.
		No	Replace the cooling fan relay No.2 or No.3, then go to Step 10.
6	**INSPECT COOLING FAN RELAY NO.2 AND NO.3 CONTROL CIRCUIT FOR SHORT TO POWER SUPPLY** • Measure voltage between following terminals and body ground. — Cooling fan relay No.2 terminal E (harness side) — Cooling fan relay No.3 terminal A (harness side) • Is voltage **B+**?	Yes	Repair or replace the wiring harness for short to power supply, then go to Step 10.
		No	Go to the next step.
7	**INSPECT COOLING FAN RELAY NO.2 AND NO.3 CONTROL CIRCUIT FOR SHORT TO GROUND** • inspect for continuity between following terminals and body ground. — Cooling fan relay No.2 terminal E (harness side) — Cooling fan relay No.3 terminal A (harness side) • Is there continuity?	Yes	Repair or replace the wiring harness for an open circuit, then go to Step 10.
		No	Go to the next step.
8	**INSPECT PCM CONNECTOR FOR POOR CONNECTION** • Turn the ignition switch off. • Disconnect PCM connector. • Inspect for poor connection (such as damaged, pulled-out pins, corrosion, etc.). • Is there any malfunction?	Yes	Repair or replace the terminal and/or connector, then go to Step 10.
		No	Go to the next step.
9	**INSPECT COOLING FAN RELAY NO.2 AND NO.3 CONTROL CIRCUIT FOR OPEN CIRCUIT** • inspect for continuity between following terminals and PCM terminal 1R (harness side). — Cooling fan relay No.2 terminal E (harness side) — Cooling fan relay No.3 terminal A (harness side) • Is there continuity?	Yes	Go to the next step.
		No	Repair or replace the wiring harness for an open circuit, then go to the next step.
10	**VERIFY TROUBLESHOOTING OF DTC P0481 COMPLETED** • Make sure to reconnect all disconnected connectors. • Clear the DTC from the PCM memory using the WDS or equivalent. • Perform the KOEO or KOER self-test. (See 01–02A–12 KOEO/KOER SELF TEST [L3].) • Is the DTC P0481 present?	Yes	Replace the PCM, then go to the next step. (See 01–40A–9 PCM REMOVAL/INSTALLATION [L3].)
		No	Go to the next step.
11	**VERIFY AFTER REPAIR PROCEDURE** • Perform the "After Repair Procedure". (See 01–02A–12 AFTER REPAIR PROCEDURE [L3].) • Is any DTC present?	Yes	Go to the applicable DTC inspection. (See 01–02A–18 DTC TABLE [L3].)
		No	Troubleshooting completed.

DTC P0482 [L3]

E6U010200400W21

DTC P0482	Cooling fan relay No.4 control circuit malfunction
DETECTION CONDITION	**California emission regulation applicable ATX model** • The PCM monitors the cooling fan relay No.4 control signal voltage and current. If the following conditions are met, the PCM determines that there is the cooling fan relay No.4 control circuit problem. — The PCM turns the cooling fan relay No.4 off, but the voltage of the cooling fan relay No.4 control signal remains low. — The PCM turns the cooling fan relay No.4 on, but the current of the cooling fan relay No.4 control signal remains high. **Diagnostic support note** • This is a continuous monitor (Other). • The MIL does not illuminate. • PENDING CODE is available if the PCM detects the above malfunction condition. • FREEZE FRAME DATA is available. • The DTC is stored in the PCM memory.
	Except for California emission regulation applicable ATX model • PCM monitors cooling fan relay No.4 control signal. If voltage remains low or high, PCM determines that fan relay circuit has a malfunction. **Diagnostic support note** • This is a continuous monitor (Other). • MIL does not illuminate. • PENDING CODE is available if PCM detects the above malfunction condition. • FREEZE FRAME DATA is not available. • DTC is stored in the PCM memory.
POSSIBLE CAUSE	• Cooling fan relay No.4 malfunction • Connector or terminal malfunction • Open circuit in wiring harness between ignition switch and cooling fan relay No.4 terminal E • Open circuit in wiring harness between cooling fan relay No.4 terminal A and PCM terminal 1N • Short to ground in wiring harness between cooling fan relay No.4 terminal A and PCM terminal 1N • Short to power supply in wiring between cooling fan relay No.4 terminal A and PCM terminal 1N • PCM malfunction

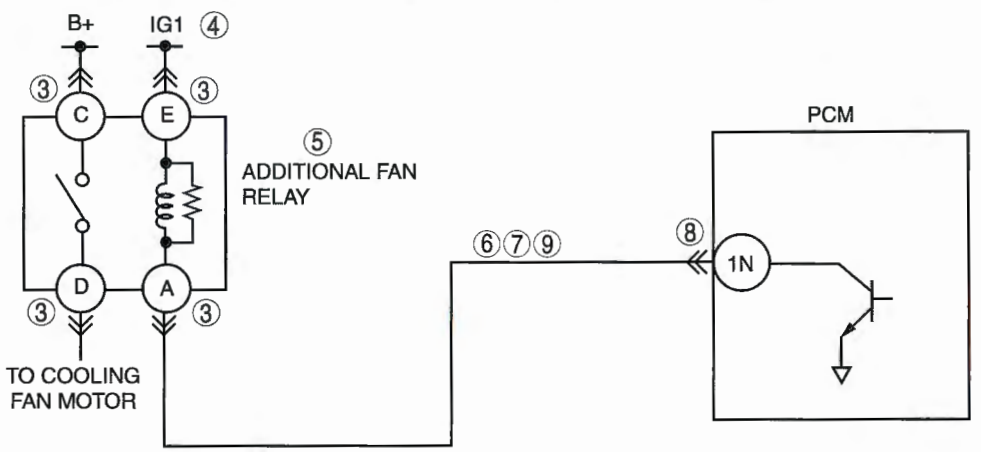

ADDITIONAL FAN RELAY HARNESS SIDE CONNECTOR

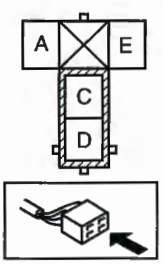

PCM HARNESS SIDE CONNECTOR

1BE	1BA	1AW	1AS	1AO	1AK	1AG	1AC	1Y	1U	1Q	1M	1I	1E	1A
1BF	1BB	1AX	1AT	1AP	1AL	1AH	1AD	1Z	1V	1R	1N	1J	1F	1B
1BG	1BC	1AY	1AU	1AQ	1AM	1AI	1AE	1AA	1W	1S	1O	1K	1G	1C
1BH	1BD	1AZ	1AV	1AR	1AN	1AJ	1AF	1AB	1X	1T	1P	1L	1H	1D

Diagnostic procedure

STEP	INSPECTION		ACTION
1	**VERIFY FREEZE FRAME DATA AND DIAGNOSTIC MONITORING TEST RESULTS HAS BEEN RECORDED** • Has FREEZE FRAME DATA been recorded?	Yes	Go to the next step.
		No	Record the FREEZE FRAME on the repair order, then go to the next step.
2	**VERIFY RELATED REPAIR INFORMATION AVAILABILITY** • Check for related Service Bulletins and/or on-line repair information availability. • Is any related repair information available?	Yes	Perform repair or diagnosis according to the available repair information. • If the vehicle is not repaired, go to the next step.
		No	Go to the next step.
3	**INSPECT COOLING FUN RELAY NO.4 CONNECTOR FOR POOR CONNECTION** • Turn the ignition switch off. • Disconnect cooling fan relay No.4 connector. • Inspect for poor connection (such as damaged/ pulled-out pins, corrosion). • Is there any malfunction?	Yes	Repair or replace the terminal and/or connector, then go to Step 10.
		No	Go to the next step.
4	**INSPECT COOLING FUN RELAY NO.4 POWER CIRCUIT FOR OPEN CIRCUIT** • Turn ignition switch to ON (Engine off). • Measure voltage between cooling fan relay No.4 terminal E (wiring harness-side) and body ground. • Is voltage **B+**?	Yes	Go to the next step.
		No	Replace or replace the wiring harness for an open circuit, then go to Step 10.
5	**INSPECT COOLING FUN RELAY NO.4** • Inspect cooling fan relay No.4. (See 09–21–7 RELAY INSPECTION.) • Is cooling fan relay No.4 normal?	Yes	Go to the next step.
		No	Replace the cooling fan relay No.4, then go to Step 10.
6	**INSPECT COOLING FUN RELAY NO.4 CONTROL CIRCUIT FOR SHORT TO POWER SUPPLY** • Measure voltage between cooling fan relay No.4 terminal A (wiring harness-side) and body ground. • Is voltage **B+**?	Yes	Repair or replace the wiring harness for short to power supply, then go to Step 10.
		No	Go to the next step.
7	**INSPECT COOLING FUN RELAY NO.4 CONTROL CIRCUIT FOR SHORT TO GROUND** • inspect for continuity between cooling fan relay No.4 terminal A (wiring harness-side) and body ground. • Is there continuity?	Yes	Repair or replace the wiring harness for an open circuit, then go to Step 10.
		No	Go to the next step.
8	**INSPECT PCM CONNECTOR FOR POOR CONNECTION** • Turn the ignition switch off. • Disconnect PCM connector. • Inspect for poor connection (such as damaged/ pulled-out pins, corrosion). • Is there any malfunction?	Yes	Repair or replace the terminal and/or connector, then go to Step 10.
		No	Go to the next step.
9	**INSPECT COOLING FUN RELAY NO.4 CONTROL CIRCUIT FOR OPEN CIRCUIT** • inspect for continuity between cooling fan relay No.4 terminal A (wiring harness-side) and PCM terminal 1N (wiring harness-side). • Is there continuity?	Yes	Go to the next step.
		No	Repair or replace the wiring harness for an open circuit, then go to the next step.
10	**VERIFY TROUBLESHOOTING OF DTC P0482 COMPLETED** • Make sure to reconnect all disconnected connectors. • Clear the DTC from the PCM memory using the WDS or equivalent. • Perform the KOEO or KOER self-test. (See 01–02A–12 KOEO/KOER SELF TEST [L3].) • Is the DTC P0481 present?	Yes	Replace the PCM, then go to the next step. (See 01–40A–9 PCM REMOVAL/INSTALLATION [L3].)
		No	Go to the next step.
11	**VERIFY AFTER REPAIR PROCEDURE** • Perform the "After Repair Procedure". (See 01–02A–12 AFTER REPAIR PROCEDURE [L3].) • Is any DTC present?	Yes	Go to the applicable DTC inspection. (See 01–02A–18 DTC TABLE [L3].)
		No	Troubleshooting completed.

DTC P0500 [L3]

E6U010200500W01

DTC P0500	Vehicle speed sensor (VSS) circuit malfunction
DETECTION CONDITION	**With ABS/TCS** • If an error in the wheel speed signal from the ABS/DSC HU/CM is detected by CAN when the following conditions are met: — Shift range in except P, N or R position (ATX) — Neutral switch and clutch pedal position switch are OFF (MTX) — Load is above **40%** — Engine speed is **2,000 rpm or above** — Brake switch is OFF **MTX without ABS/TCS** • Vehicle speed signal from vehicle speed sensor is **below 3.7 km/h {2.3 mph}** when following conditions are met: — Neutral switch and clutch pedal position switch are OFF — Load is above **40%** — Engine speed is **2,000 rpm or above** — Brake switch is OFF **Diagnostic support note** • This is a continuous monitor (CCM). • MIL illuminates if PCM detects above malfunction condition in two consecutive drive cycles or in one drive cycle while DTC for the same malfunction has been stored in PCM. • PENDING CODE is available if PCM detects the above malfunction condition during first drive cycle. • FREEZE FRAME DATA is available. • DTC is stored in PCM memory.
POSSIBLE CAUSE	**Without ABS/TCS** • VSS malfunction • Connector or terminal malfunction • Open circuit between PCM terminal 2M and VSS terminal A (MTX) • Open circuit between PCM terminal 2N and VSS terminal B (MTX) • Short to ground between PCM terminal 2M and VSS terminal A (MTX) • Short to ground between PCM terminal 2N and VSS terminal B (MTX) • Short to power supply between PCM terminal 2M and VSS terminal A (MTX) • Short to power supply between PCM terminal 2N and VSS terminal B (MTX) • PCM malfunction **With ABS/TCS** • Front ABS wheel-speed sensor malfunction • ABS/TCS/DSC malfunction • Connector or terminal malfunction • PCM malfunction

DTC P0500	Vehicle speed sensor (VSS) circuit malfunction

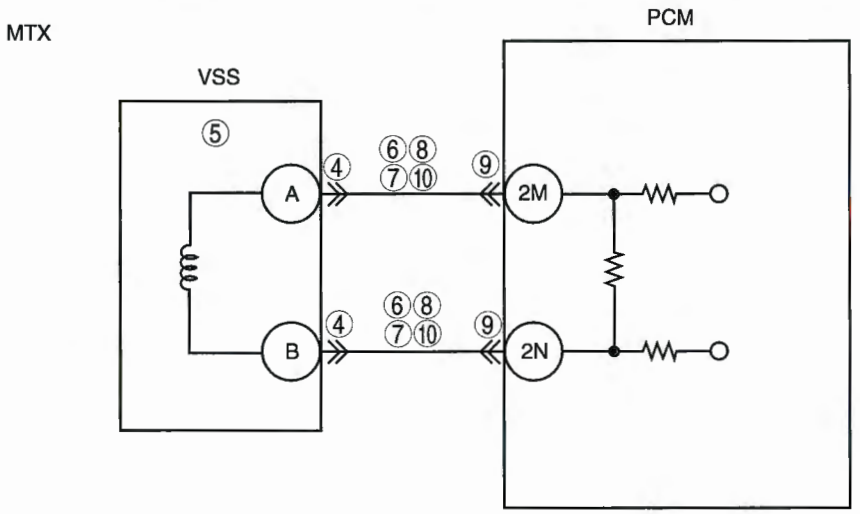

VSS
HARNESS SIDE CONNECTOR

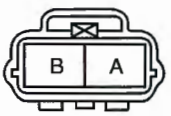

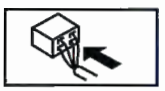

PCM
HARNESS SIDE CONNECTOR

2BE	2BA	2AW	2AS	2AO	2AK	2AG	2AC	2Y	2U	2Q	2M	2I	2E	2A
2BF	2BB	2AX	2AT	2AP	2AL	2AH	2AD	2Z	2V	2R	2N	2J	2F	2B
2BG	2BC	2AY	2AU	2AQ	2AM	2AI	2AE	2AA	2W	2S	2O	2K	2G	2C
2BH	2BD	2AZ	2AV	2AR	2AN	2AJ	2AF	2AB	2X	2T	2P	2L	2H	2D

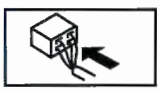

Diagnostic procedure

STEP	INSPECTION		ACTION
1	**VERIFY FREEZE FRAME DATA HAS BEEN RECORDED** • Has FREEZE FRAME PID DATA been recorded?	Yes	Go to the next step.
		No	Record FREEZE FRAME PID DATA on repair order, then go to the next step.
2	**VERIFY RELATED SERVICE INFORMATION AVAILABILITY** • Check for related Service Information availability. • Is any related Service Information available?	Yes	Perform repair or diagnosis according to available Service Information. • If the vehicle is not repaired, go to the next step.
		No	Go to the next step.
3	**VERIFY CURRENT INPUT SIGNAL STATUS-IS CONCERN INTERMITTENT OR CONSTANT** • Connect WDS or equivalent to DLC-2. • Start engine. • Access VSS PID using the WDS or equivalent. — Vehicle speed **20 km/h {12.4 mph}: 20km/h {12.4 mph}** — Vehicle speed **40 km/h {24.8 mph}: 40km/h {24.8 mph}** • Are PID readings within specification?	Yes	Go to intermittent concern troubleshooting procedure. (See 01–03A–7 INTERMITTENT CONCERN TROUBLESHOOTING [L3].)
		No	Go to the next step.
4	**INSPECT VSS CONNECTOR FOR POOR CONNECTION** • Verify that the VSS connector is connected securely. • Is connector normal?	Yes	Go to the next step.
		No	Reconnect the connector, then go to Step 11.

STEP	INSPECTION		ACTION
5	**INSPECT VSS** • Perform VSS inspection. (See 05–15A–4 VEHICLE SPEED SENSOR INSPECTION (WITHOUT ABS) [G35M-R].) (See 05–15B–5 VEHICLE SPEED SENSOR INSPECTION (WITHOUT ABS) [A65M-R].) • Is VSS normal?	Yes	Go to the next step.
		No	Replace VSS, then go to Step 11.
6	**INSPECT VSS CIRCUIT FOR SHORT TO POWER** • Turn ignition switch OFF • Disconnect VSS connector. • Turn ignition switch ON (Engine off) • Measure voltage following terminals: — VSS terminal A (wiring harness-side) — VSS terminal B (wiring harness-side) • Is there any voltage?	Yes	Repair or replace suspected harness, then go to Step 11.
		No	Go to the next step.
7	**INSPECT VSS CIRCUIT FOR SHORT TO GROUND** • Inspect continuity between following terminal and body ground: — VSS terminal A (wiring harness-side) — VSS terminal B (wiring harness-side) • Is there continuity?	Yes	Repair or replace suspected harness, then go to Step 11.
		No	Go to the next step.
8	**INSPECT VSS CIRCUITS FOR SHORT CIRCUIT** • Inspect continuity between VSS connector terminals A and B (wiring harness-side). • Is there continuity?	Yes	Repair or replace suspected harness, then go to Step 11.
		No	Go to the next step.
9	**INSPECT PCM CONNECTOR FOR POOR CONNECTION** • Disconnect PCM connector. • Inspect for poor connection (such as damaged/ pulled-out pins, corrosion). • Is there any malfunction?	Yes	Repair terminal, then go to Step 11.
		No	Go to the next step.
10	**INSPECT VSS CIRCUIT FOR OPEN CIRCUIT** • Inspect continuity between following terminals (wiring harness-side): — VSS terminal A and PCM terminal 2M — VSS terminal B and PCM terminal 2N • Is there continuity?	Yes	Inspect VSS pulse wheel for damage. Replace VSS pulse wheel and go to the next step.
		No	Repair or replace suspected harness, then go to the next step.
11	**VERIFY TROUBLESHOOTING OF DTC P0500 COMPLETED** • Make sure to reconnect all disconnected connectors. • Turn ignition switch to ON (Engine off). • Clear the DTC from the PCM memory using the WDS or equivalent. • Warm up engine. • Access RPM and LOAD PID using the WDS or equivalent. • Drive vehicle under following conditions for **18s**. — Engine speed: **2,000 rpm or above** — Gear: Gear is in other than NEUTRAL — Load: **40% or above** • Is PENDING CODE for this DTC present?	Yes	Replace PCM, then go to the next step. (See 01–40A–9 PCM REMOVAL/INSTALLATION [L3].)
		No	Go to the next step.
12	**VERIFY AFTER REPAIR PROCEDURE** • Perform the "After Repair Procedure". (See 01–02A–12 AFTER REPAIR PROCEDURE [L3].) • Is any DTC present?	Yes	Go to applicable DTC troubleshooting. (See 01–02A–18 DTC TABLE [L3].)
		No	Troubleshooting completed.

DTC P0505 [L3]

E6U010200500W02

DTC P0505	Idle control system malfunction
DETECTION CONDITION	• PCM cannot control idle speed toward target idle speed while KOER self test.
POSSIBLE CAUSE	• Electronic throttle control system malfunction • Clogged air cleaner element • Clogged air intake passage • A/C relay control circuit malfunction • Generator control circuit malfunction • Low engine compression (Over capacity of blow-by gas) • PCM malfunction

Diagnostic procedure

STEP	INSPECTION		ACTION
1	**VERIFY RELATED REPAIR INFORMATION AVAILABILITY** • Check for related Service Bulletins and/or on-line repair information availability. • Is any related repair information available?	Yes	Perform repair or diagnosis according to the available repair information. • If the vehicle is not repaired, go to the next step.
		No	Go to the next step.
2	**VERIFY RELATED PENDING OR STORED DTCS** • Turn ignition switch to OFF, then ON. (Engine off) • Verify PENDING CODE or stored DTCs using the WDS or equivalent. • Is DTC P0506, P0507, P2100, P2101, P2102, P2103, P2107, P2108 or P2119 present?	Yes	Perform applicable DTC inspection. (See 01–02A–18 DTC TABLE [L3].)
		No	Go to the next step.
3	**INSPECT ELECTRONIC THROTTLE CONTROL SYSTEM OPERATION** • Perform electronic throttle control system operation inspection. (See 01–03A–66 Electronic Throttle Control System Inspection.) • Does electronic throttle control system work properly?	Yes	Go to the next step.
		No	Repair or replace malfunctioning parts according to electronic throttle control system operation inspection results, then go to Step 9.
4	**INSPECT A/C MAGNETIC CLUTCH OPERATION** **Note** • The following test should be performed for A/C. Go to the next step for vehicles without A/C. • Turn blower motor switch to off. • Is magnetic clutch still on?	Yes	Go to "A/C ALWAYS ON / A/C COMPRESSOR RUNS CONTINUOUSLY." of ENGINE SYMPTOM TROUBLESHOOTING then go to Step 9. (See 01–03A–10 ENGINE SYMPTOM TROUBLESHOOTING [L3].)
		No	Go to the next step.
5	**INSPECT GENERATOR CONTROL CIRCUIT MALFUNCTION** • Apply electrical load at idle. • Is engine speed increased?	Yes	Go to the next step.
		No	Repair short to power supply in generator control circuit, then go to Step 9.
6	**INSPECT AIR CLEANER ELEMENT** • Remove air cleaner element with engine running. • Does engine speed increase?	Yes	Clean or replace air cleaner element, then go to Step 9.
		No	Go to the next step.
7	**INSPECT THROTTLE BODY PASSAGE** • Is throttle body clogged?	Yes	Clean or replace throttle body passage, then go to Step 9.
		No	Go to the next step.
8	**INSPECT ENGINE COMPRESSION** • Inspect engine compression. (See 01–10A–4 COMPRESSION INSPECTION [L3].) • Is engine compression normal?	Yes	Go to the next step.
		No	Overhaul engine, then go to the next step.

STEP	INSPECTION		ACTION
9	**VERIFY TROUBLESHOOTING OF DTC P0505 COMPLETED** • Make sure to reconnect all disconnected connectors. • Clear DTC using the WDS or equivalent. • Perform vehicle self-test. • Is same DTC present?	Yes	Replace PCM, then go to the next step. (See 01–40A–9 PCM REMOVAL/INSTALLATION [L3].)
		No	Go to the next step.
10	**VERIFY AFTER REPAIR PROCEDURE** • Perform the "After Repair Procedure". (See 01–02A–12 AFTER REPAIR PROCEDURE [L3].) • Is any DTC present?	Yes	Go to the applicable DTC inspection. (See 01–02A–18 DTC TABLE [L3].)
		No	Troubleshooting completed.

DTC P0506 [L3]

E6U010200500W03

DTC P0506	Idle control system RPM lower than expected
DETECTION CONDITION	• Actual idle speed is lower than expected by **100 rpm** for **14 s**, when brake pedal is depressed (brake switch is ON) and steering wheel is held straight ahead (power steering pressure switch is OFF). **Note** • If atmospheric pressure is **less than 72.3 kPa {542 mmHg, 21.3 inHg}** or intake air temperature is **below –10 °C {14 °F}**, PCM cancels diagnosis of P0506. **Diagnostic support note** • This is a continuous monitor (CCM). • MIL illuminates if PCM detects above malfunction condition in two consecutive drive cycles or in one drive cycle while DTC for the same malfunction has been stored in PCM. • PENDING CODE is available if PCM detects the above malfunction condition during first drive cycle. • FREEZE FRAME DATA is available. • DTC is stored in PCM memory.
POSSIBLE CAUSE	• Electronic throttle control system malfunction • Air cleaner element clogged • Air intake passage clogged • A/C relay control circuit malfunction • Generator malfunction • Purge solenoid valve malfunction • Low engine compression (Over capacity of blow-by gas) • PCM malfunction

Diagnostic procedure

STEP	INSPECTION		ACTION
1	**VERIFY FREEZE FRAME DATA HAS BEEN RECORDED** • Has FREEZE FRAME DATA been recorded?	Yes	Go to the next step.
		No	Record FREEZE FRAME DATA on repair order, then go to the next step.
2	**VERIFY RELATED SERVICE INFORMATION AVAILABILITY** • Check for related Service Bulletins and/or on-line repair information availability. • Is any related repair information available?	Yes	Perform repair or diagnosis according to the available repair information. • If the vehicle is not repaired, then go to the next step.
		No	Go to the next step.
3	**VERIFY RELATED PENDING OR STORED DTCS** • Turn ignition switch to OFF, then ON (Engine off). • Verify pending code or stored DTCs using the WDS or equivalent. • Is other DTC present?	Yes	Repair applicable DTCs. (See 01–02A–18 DTC TABLE [L3].)
		No	Go to the next step.
4	**INSPECT A/C MAGNET CLUTCH OPERATION** • Turn blower motor switch off. • Is magnet clutch still on?	Yes	Refer to "A/C is always on or A/C compressor runs continuously." of ENGINE SYMPTOM TROUBLESHOOTING, then go to Step 10. (See 01–03A–55 NO.24 A/C IS ALWAYS ON OR A/C COMPRESSOR RUNS CONTINUOUSLY [L3].)
		No	Go to the next step.
5	**INSPECT ELECTRONIC THROTTLE CONTROL SYSTEM MALFUNCTION** • Inspect the following parts: — APP sensor (See 01–40A–29 ACCELERATOR PEDAL POSITION (APP) SENSOR INSPECTION [L3].) — TP sensor (See 01–40A–30 THROTTLE POSITION (TP) SENSOR INSPECTION [L3].) • Are they normal?	Yes	Go to the next step.
		No	Replace the necessary parts, then go to Step 10.
6	**INSPECT PURGE SOLENOID VALVE MALFUNCTION** • Perform purge solenoid valve inspection. (See 01–16A–13 PURGE SOLENOID VALVE INSPECTION [L3, AJ].) • Is purge solenoid valve normal?	Yes	Go to the next step.
		No	Replace purge solenoid valve, then go to Step 10.
7	**INSPECT AIR CLEANER ELEMENT** • Remove air cleaner element with engine running. • Does engine speed increase?	Yes	Replace air cleaner element, then go to Step 10.
		No	Go to the next step.
8	**INSPECT ENGINE COMPRESSION** • Inspect engine compression. (See 01–10A–4 COMPRESSION INSPECTION [L3].) • Is engine compression normal?	Yes	Go to the next step.
		No	Overhaul engine, then go to Step 10.
9	**INSPECT GENERATOR** • Perform generator inspection. (See 01–17A–5 GENERATOR INSPECTION [L3, AJ].) • Is generator normal?	Yes	Go to the next step.
		No	Repair or replace related part, then go to the next step.
10	**VERIFY TROUBLESHOOTING OF DTC P0506 COMPLETED** • Make sure to reconnect all disconnected connectors. • Start engine. • Clear the DTC from the PCM memory using the WDS or equivalent. • Depress brake pedal for **14 s or more.** • Is PENDING CODE for this DTC present?	Yes	Replace PCM, then go to the next step.
		No	Go to the next step.
11	**VERIFY AFTER REPAIR PROCEDURE** • Perform the "After Repair Procedure". (See 01–02A–12 AFTER REPAIR PROCEDURE [L3].) • Is any DTC present?	Yes	Go to the applicable DTC inspection. (See 01–02A–18 DTC TABLE [L3].)
		No	Troubleshooting completed.

DTC P0507 [L3]

E6U010200500W04

DTC P0507	Idle control system RPM higher than expected
DETECTION CONDITION	• Actual idle speed is higher than expected by **200 rpm** for **14 s**, when brake pedal is depressed (brake switch is ON) and steering wheel is held straight ahead (power steering pressure switch is OFF). **Note** • If atmospheric pressure is **less than 72.3 kPa {542 mmHg, 21.3 inHg}** or intake air temperature is **below –10 °C {14 °F}**, PCM cancels diagnosis of P0507. **Diagnostic support note** • This is a continuous monitor (CCM). • MIL illuminates if PCM detects above malfunction condition in two consecutive drive cycles or in one drive cycle while DTC for the same malfunction has been stored in PCM. • PENDING CODE is available if PCM detects the above malfunction condition during first drive cycle. • FREEZE FRAME DATA is available. • DTC is stored in PCM memory.
POSSIBLE CAUSE	• Electronic throttle control system malfunction • Vacuum hose misconnection • PCM malfunction

Diagnostic procedure

STEP	INSPECTION		ACTION
1	**VERIFY FREEZE FRAME DATA HAS BEEN RECORDED** • Has FREEZE FRAME DATA been recorded?	Yes	Go to the next step.
		No	Record FREEZE FRAME DATA on repair order, then go to the next step.
2	**VERIFY RELATED SERVICE INFORMATION AVAILABILITY** • Check for related Service Bulletins and/or on-line repair information availability. • Is any related repair information available?	Yes	Perform repair or diagnosis according to the available repair information. • If the vehicle is not repaired, then go to the next step.
		No	Go to the next step.
3	**VERIFY RELATED PENDING OR STORED DTCS** • Turn ignition switch to OFF, then ON (Engine off). • Verify pending code or stored DTCs using the WDS or equivalent. • Is other DTC present?	Yes	Repair applicable DTCs. (See 01–02A–18 DTC TABLE [L3].)
		No	Go to the next step.
4	**INSPECT VACUUM HOSE CONNECTION** • Are vacuum hoses connecting accurately? (See 01–13A–3 VACUUM HOSE ROUTING DIAGRAM [L3].)	Yes	Go to the next step.
		No	Reconnect vacuum hose accurately, then go to step 6.
5	**INSPECT ELECTRONIC THROTTLE CONTROL SYSTEM MALFUNCTION** • Inspect the following parts: — APP sensor (See 01–40A–29 ACCELERATOR PEDAL POSITION (APP) SENSOR INSPECTION [L3].) — TP sensor (See 01–40A–30 THROTTLE POSITION (TP) SENSOR INSPECTION [L3].) • Are they normal?	Yes	Go to the next step.
		No	Replace the necessary parts, then go to the next step.
6	**VERIFY TROUBLESHOOTING OF DTC P0507 COMPLETED** • Make sure to reconnect all disconnected connectors. • Start engine. • Clear the DTC from the PCM memory using the WDS or equivalent. • Depress brake pedal for **14 s or more.** • Is PENDING CODE for this DTC present?	Yes	Replace PCM, then go to the next step.
		No	Go to the next step.
7	**VERIFY AFTER REPAIR PROCEDURE** • Perform the "After Repair Procedure". (See 01–02A–12 AFTER REPAIR PROCEDURE [L3].) • Is any DTC present?	Yes	Go to the applicable DTC inspection. (See 01–02A–18 DTC TABLE [L3].)
		No	Troubleshooting completed.

DTC P0550 [L3]

E6U010200500W08

DTC P0550	PSP switch circuit malfunction
DETECTION CONDITION	• The PCM monitors PSP switch signal. If input voltage is low voltage (switch stays on) for **1 min.** when the VSS is **above 60 km/h {37 mph}** and ECT is **above 60 °C {140 °F}**, the PCM determines that PSP switch circuit has a malfunction. **Diagnostic support note** • This is a continuous monitor (CCM). • MIL illuminates if PCM detects above malfunction condition in two consecutive drive cycles or in one drive cycle while DTC for the same malfunction has been stored in PCM. • PENDING CODE is available if PCM detects the above malfunction condition during first drive cycle. • FREEZE FRAME DATA is available. • DTC is stored in PCM memory.
POSSIBLE CAUSE	• PSP switch malfunction • Connector or terminal malfunction • Short to ground in wiring harness between PSP switch terminal A and PCM terminal 2T • PCM malfunction

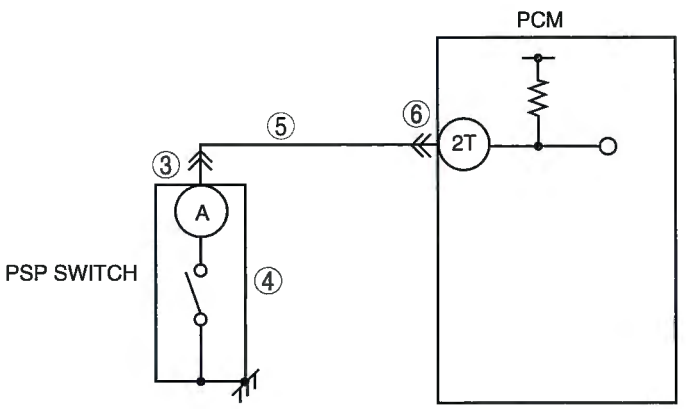

PSP SWITCH
HARNESS SIDE CONNECTOR

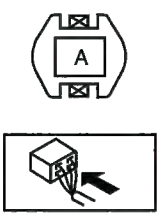

PCM
WIRING HARNESS-SIDE CONNECTOR

2BE	2BA	2AW	2AS	2AO	2AK	2AG	2AC	2Y	2U	2Q	2M	2I	2E	2A
2BF	2BB	2AX	2AT	2AP	2AL	2AH	2AD	2Z	2V	2R	2N	2J	2F	2B
2BG	2BC	2AY	2AU	2AQ	2AM	2AI	2AE	2AA	2W	2S	2O	2K	2G	2C
2BH	2BD	2AZ	2AV	2AR	2AN	2AJ	2AF	2AB	2X	2T	2P	2L	2H	2D

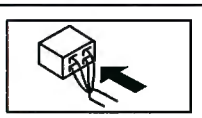

Diagnostic procedure

STEP	INSPECTION		ACTION
1	**VERIFY FREEZE FRAME DATA AND DIAGNOSTIC MONITORING TEST RESULTS HAS BEEN RECORDED** • Has FREEZE FRAME DATA been recorded?	Yes	Go to the next step.
		No	Record the FREEZE FRAME on the repair order, then go to the next step.
2	**VERIFY RELATED REPAIR INFORMATION AVAILABILITY** • Check for related Service Bulletins and/or on-line repair information availability. • Is any related repair information available?	Yes	Perform repair or diagnosis according to the available repair information. • If the vehicle is not repaired, go to the next step.
		No	Go to the next step.
3	**INSPECT PSP CONNECTOR FOR POOR CONNECTION** • Turn the ignition switch off. • Disconnect PSP connector. • Inspect for poor connection (such as damaged/ pulled-out pins, corrosion). • Is there any malfunction?	Yes	Repair or replace the terminal, then go to Step 7.
		No	Go to the next step.
4	**INSPECT PSP SWITCH** • Perform PSP switch inspection. (See 01–40A–27 POWER STEERING PRESSURE (PSP) SWITCH INSPECTION [L3].) • Is PSP switch normal?	Yes	Go to the next step.
		No	Replace PSP switch, then go to Step 7.
5	**INSPECT PSP SWITCH SIGNAL CIRCUIT FOR SHORT TO GROUND** • Disconnect PCM connector. • inspect for continuity between PSP switch terminal A (wiring harness-side) and body ground. • Is there continuity?	Yes	Repair or replace harness for short to ground, then go to Step 7.
		No	Go to the next step.
6	**INSPECT PCM CONNECTOR FOR POOR CONNECTION** • Turn the ignition switch to off. • Disconnect the PCM connector. • Inspect for poor connection (such as damaged/ pulled-out pins, corrosion). • Is there any malfunction?	Yes	Repair terminal, then go to the next step.
		No	Go to the next step.
7	**VERIFY TROUBLESHOOTING OF DTC P0550 COMPLETED** • Make sure to reconnect all disconnected connectors. • Start the engine. • Clear the DTC from the PCM memory using the WDS or equivalent. • Drive vehicle **above 60 km/h {37 mph}** for **1 min.** • Verify that ECT PID **above 60 °C {140 °F}** using the WDS or equivalent. • Is PENDING CODE for this DTC present?	Yes	Replace PCM, then go to the next step. (See 01–40A–9 PCM REMOVAL/INSTALLATION [L3].)
		No	Go to the next step.
8	**VERIFY AFTER REPAIR PROCEDURE** • Perform the "After Repair Procedure". (See 01–02A–12 AFTER REPAIR PROCEDURE [L3].) • Is any DTC present?	Yes	Go to the applicable DTC inspection. (See 01–02A–18 DTC TABLE [L3].)
		No	Troubleshooting completed.

DTC P0564 [L3]

E6U010200500W06

DTC P0564	Cruise control switch circuit malfunction
DETECTION CONDITION	• The PCM monitors the cruise control switch signal. If the PCM detects that any one of following switches (Main, CANCEL, SET/COAST, RESUME/ACCEL) remains on for **2 min**, the PCM determines that the cruise control switch circuit has a malfunction. **Diagnostic support note** • This is a continuous monitor (Other). • MIL does not illuminate. • PENDING CODE is available if PCM detects the above malfunction condition. • FREEZE FRAME DATA is not available. • DTC is stored in PCM memory.
POSSIBLE CAUSE	• Cruise control switch malfunction • Connector or terminal malfunction • Short to power supply in wiring harness from cruise control switch terminal B and PCM terminal 1AQ. • Short to GND in wiring harness from cruise control switch terminal B and PCM terminal 1AQ. • PCM malfunction

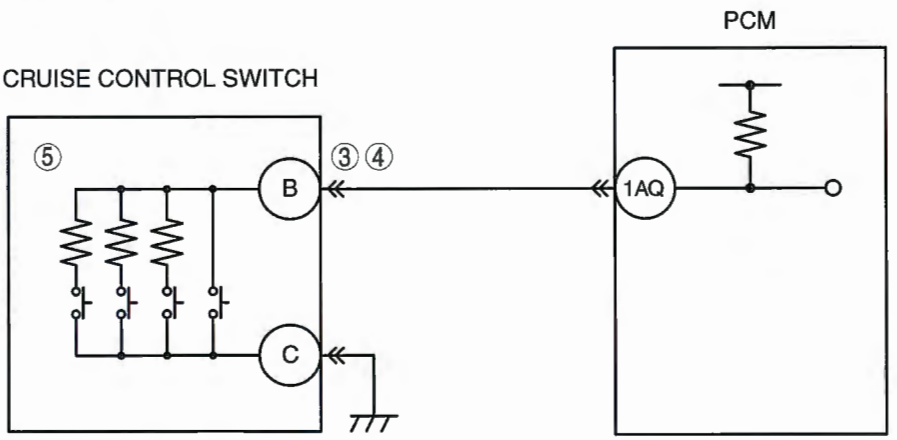

CRUISE CONTROL SWITCH
HARNESS SIDE CONNECTOR

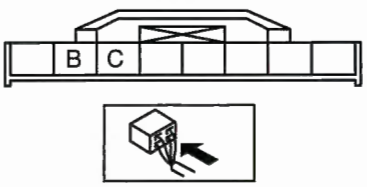

PCM
HARNESS SIDE CONNECTOR

1BE	1BA	1AW	1AS	1AO	1AK	1AG	1AC	1Y	1U	1Q	1M	1I	1E	1A
1BF	1BB	1AX	1AT	1AP	1AL	1AH	1AD	1Z	1V	1R	1N	1J	1F	1B
1BG	1BC	1AY	1AU	1AQ	1AM	1AI	1AE	1AA	1W	1S	1O	1K	1G	1C
1BH	1BD	1AZ	1AV	1AR	1AN	1AJ	1AF	1AB	1X	1T	1P	1L	1H	1D

Diagnostic procedure

STEP	INSPECTION		ACTION
1	**VERIFY RELATED REPAIR INFORMATION AVAILABILITY** • Check for related Service Bulletins and/or on-line repair information availability. • Is any related repair information available?	Yes	Perform repair or diagnosis according to the available repair information. • If the vehicle is not repaired, go to the next step.
		No	Go to the next step.
2	**INSPECT CRUISE CONTROL SWITCH CONNECTOR FOR POOR CONNECTION** • Turn the ignition switch off. • Inspect for poor connection (such as damaged, pulled-put terminals, corrosion). • Is there any malfunction?	Yes	Repair or replace suspected terminal, then go to Step 6.
		No	Go to the next step.
3	**INSPECT CRUISE CONTROL SWITCH SIGNAL CIRCUIT FOR SHORT TO GND** • Disconnect cruise control switch and PCM connectors. • Inspect continuity between cruise control switch terminal B (wiring harness-side) and body GND. • Is there continuity?	Yes	Repair or replace short to GND, then go to Step 6.
		No	Go to the next step.
4	**INSPECT CRUISE CONTROL SWITCH SIGNAL CIRCUIT FOR SHORT TO POWER** • Turn ignition switch to ON (Engine off). • Inspect voltage between cruise control switch terminal (wiring harness-side) and body GND. • Is voltage **below 1.0 V**?	Yes	Go to the next step.
		No	Repair or replace short to power supply, then go to Step 6.
5	**INSPECT CRUISE CONTROL SWITCH OPERATION** • Inspect cruise control switch. (See 01–20A–1 CRUISE CONTROL SWITCH INSPECTION [L3, AJ].) • Is cruise control switch normal?	Yes	Go to the next step.
		No	Replace cruise control switch, then go to the next step.
6	**VERIFY TROUBLESHOOTING OF P0564 COMPLETED** • Make sure to reconnect all disconnected connectors. • Clear the DTC from the PCM memory using the WDS or equivalent. • Drive vehicle with cruise control **2 min. or more.** • Is same DTC present?	Yes	Replace PCM, then go to the next step. (See 01–40A–9 PCM REMOVAL/INSTALLATION [L3].)
		No	Go to the next step.
7	**VERIFY AFTER REPAIR PROCEDURE** • Perform the "After Repair Procedure". (See 01–02A–12 AFTER REPAIR PROCEDURE [L3].) • Is any DTC present?	Yes	Go to the applicable DTC inspection. (See 01–02A–18 DTC TABLE [L3].)
		No	Troubleshooting completed.

DTC P0571 [L3]

E6U010200500W07

DTC P0571	Brake switch circuit malfunction
DETECTION CONDITION	• The PCM monitors changes in input voltage for brake switch No.1 and No.2. If the PCM detects that both brake switches No.1 and No.2 remain on or off for **15 s**, it determines that the brake switch circuit has a malfunction. **Diagnostic support note** • This is a continuous monitor (Other). • MIL does not illuminate. • PENDING CODE is available if PCM detects the above malfunction condition. • FREEZE FRAME DATA is not available. • DTC is stored in PCM memory.
POSSIBLE CAUSE	• Brake switch malfunction • Open circuit between brake switch terminal A and PCM terminal 1AF • Open circuit between brake switch terminal C and body ground • Short to power supply between brake switch terminal A and PCM terminal 1AF • Short to GND between brake switch terminal A and PCM terminal 1AF • PCM malfunction

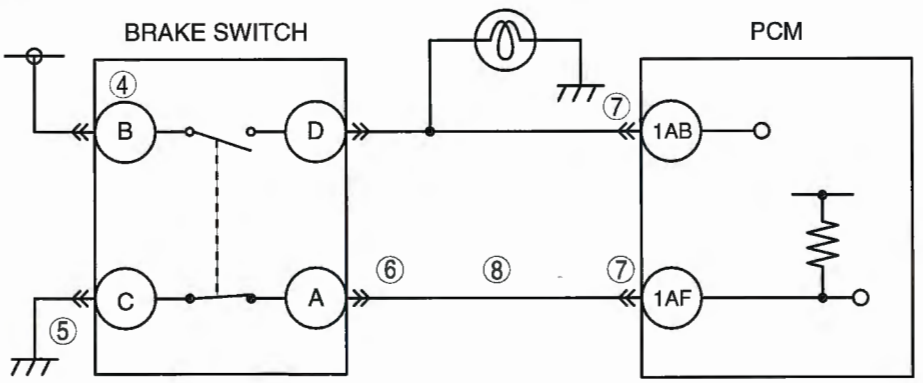

BRAKE SWITCH
HARNESS SIDE CONNECTOR

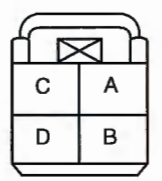

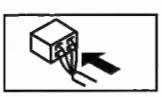

PCM
HARNESS SIDE CONNECTOR

1BE	1BA	1AW	1AS	1AO	1AK	1AG	1AC	1Y	1U	1Q	1M	1I	1E	1A
1BF	1BB	1AX	1AT	1AP	1AL	1AH	1AD	1Z	1V	1R	1N	1J	1F	1B
1BG	1BC	1AY	1AU	1AQ	1AM	1AI	1AE	1AA	1W	1S	1O	1K	1G	1C
1BH	1BD	1AZ	1AV	1AR	1AN	1AJ	1AF	1AB	1X	1T	1P	1L	1H	1D

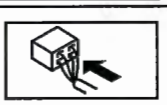

Diagnostic procedure

STEP	INSPECTION		ACTION
1	**VERIFY FREEZE FRAME DATA HAS BEEN RECORDED** • Has FREEZE FRAME DATA been recorded?	Yes	Go to the next step.
		No	Record FREEZE FRAME DATA on repair, then go to the next step.
2	**VERIFY RELATED REPAIR INFORMATION AVAILABILITY** • Check for related Service Bulletins and/or on-line repair information availability. • Is any related repair information available?	Yes	Perform repair or diagnosis according to the available repair information. • If the vehicle is not repaired, go to the next step.
		No	Go to the next step.
3	**INSPECT BRAKE SWITCH CONNECTOR FOR POOR CONNECTION** • Turn the ignition switch off. • Disconnect brake switch connector. • Inspect for poor connection (such as damaged, pull-out pins, corrosion). • Is there any malfunction?	Yes	Repair or replace terminal then go to Step 10.
		No	Go to the next step.

STEP	INSPECTION		ACTION
4	**INSPECT BRAKE SWITCH** • Inspect brake switch. • Is brake switch normal?	Yes	Go to the next step.
		No	Replace brake switch, then go to Step 10.
5	**INSPECT GND CIRCUIT OF BRAKE SWITCH NO.2 FOR OPEN CIRCUIT** • Inspect continuity between brake switch terminal C (wiring harness-side) and body ground. • Is there continuity?	Yes	Go to the next step.
		No	Repair or replace harness for open circuit, then go to Step 10.
6	**INSPECT SIGNAL CIRCUIT OF BRAKE SWITCH NO.2 FOR SHORT TO GROUND** • Inspect continuity between brake switch terminal A (wiring harness-side) and body ground. • Is there continuity?	Yes	Repair or replace harness for short to ground circuit, then go to Step 10.
		No	Go to the next step.
7	**INSPECT PCM CONNECTOR FOR POOR CONNECTION** • Turn the ignition switch off. • Disconnect PCM connector. • Inspect for poor connection (such as damaged, pull-out pins, corrosion). • Is there any malfunction?	Yes	Repair or replace the terminal, then go to Step 10.
		No	Go to the next step.
8	**INSPECT SIGNAL CIRCUIT OF BRAKE SWITCH NO.2 FOR OPEN CIRCUIT** • Inspect continuity between brake switch terminal A (wiring harness-side) and PCM terminal 3T (wiring harness-side). • Is there continuity?	Yes	Go to the next step.
		No	Repair or replace harness for open circuit, then go to Step 10.
9	**INSPECT SIGNAL CIRCUIT OF BRAKE SWITCH NO.2 FOR SHORT TO POWER** • Turn ignition switch to ON (Engine off). • Measure voltage between brake switch terminal A (wiring harness-side) and body ground. • Is voltage **B+**?	Yes	Repair or replace harness for short to power supply, then go to the next step.
		No	Go to the next step.
10	**VERIFY TROUBLESHOOTING OF P0571 COMPLETED** • Make sure to reconnect all disconnected connectors. • Clear the DTC from the PCM memory using the WDS or equivalent. • Turn ignition switch to ON (Engine off). • Depress and release brake pedal **more than 5 times**. • Is same DTC present?	Yes	Replace PCM, then go to the next step. (See 01–40A–9 PCM REMOVAL/INSTALLATION [L3].)
		No	Go to the next step.
11	**VERIFY AFTER REPAIR PROCEDURE** • Perform the "After Repair Procedure". (See 01–02A–12 AFTER REPAIR PROCEDURE [L3].) • Is any DTC present?	Yes	Go to the applicable DTC inspection. (See 01–02A–18 DTC TABLE [L3].)
		No	Troubleshooting completed.

*1 : California emission regulation applicable ATX model
*2 : Except for California emission regulation applicable ATX model

DTC P0601 [L3]

E6U010200600W01

DTC P0601	Internal control module memory check sum error
DETECTION CONDITION	• PCM internal memory check sum error. **Diagnostic support note** • This is a continuous monitor (CCM). • MIL illuminates if PCM detects the above malfunction condition during first drive cycle. • PENDING CODE is available if PCM detects the above malfunction condition. • FREEZE FRAME DATA is available. • DTC is stored in PCM memory.
POSSIBLE CAUSE	• PCM internal memory malfunction • PCM internal CPU malfunction

Diagnostic procedure

STEP	INSPECTION		ACTION
1	**VERIFY FREEZE FRAME DATA HAS BEEN RECORDED** • Has FREEZE FRAME DATA been recorded?	Yes	Go to the next step.
		No	Record FREEZE FRAME DATA on repair order, then go to the next step.
2	**VERIFY RELATED REPAIR INFORMATION AVAILABILITY** • Check for related Service Bulletins and/or on-line repair information availability. • Is any related repair information available?	Yes	Perform repair or diagnosis according to the available repair information. • If the vehicle is not repaired, go to the next step.
		No	Go to the next step.
3	**VERIFY TROUBLESHOOTING OF P0601 COMPLETED** • Make sure to reconnect all disconnected connectors. • Clear the DTC from the PCM memory using the WDS or equivalent. • Start engine. • Is same DTC present?	Yes	Replace PCM, go to the next step. (See 01–40A–9 PCM REMOVAL/INSTALLATION [L3].)
		No	Go to the next step.
4	**VERIFY AFTER REPAIR PROCEDURE** • Perform the "After Repair Procedure". (See 01–02A–12 AFTER REPAIR PROCEDURE [L3].) • Is any DTC present?	Yes	Go to the applicable DTC inspection. (See 01–02A–18 DTC TABLE [L3].)
		No	Troubleshooting completed.

DTC P0602 [L3]

E6U010200600W02

DTC P0602	PCM programming error
DETECTION CONDITION	• No configuration data in PCM **Note** • When the configration is completed, DTC P0602 is cleared. **Diagnostic support note** • This is a continuous monitor (CCM). • MIL illuminates if PCM detects the above malfunction condition during first drive cycle. • PENDING CODE is available if PCM detects the above malfunction condition. • FREEZE FRAME DATA is available. • DTC is stored in PCM memory.
POSSIBLE CAUSE	• Complete configuration has not been completed. • PCM malfunction

Diagnostic procedure

STEP	INSPECTION		ACTION
1	**VERIFY FREEZE FRAME DATA HAS BEEN RECORDED** • Has FREEZE FRAME DATA been recorded?	Yes	Go to the next step.
		No	Record FREEZE FRAME DATA on repair order, then go to the next step.
2	**VERIFY RELATED REPAIR INFORMATION AVAILABILITY** • Check for related Service Bulletins and/or on-line repair information availability. • Is any related repair information available?	Yes	Perform repair or diagnosis according to the available repair information. • If the vehicle is not repaired, go to the next step.
		No	Perform PCM configuration procedure, then go to the next step. (See 01–40A–24 PCM REPLACEMENT [L3].)
3	**VERIFY TROUBLESHOOTING OF DTC P0602 COMPLETED** • Make sure to reconnect all disconnected connectors. • Turn ignition switch to ON (Engine off). • Clear the DTC from the PCM memory using the WDS or equivalent. • Start engine. • Is same DTC present?	Yes	Replace PCM, then go to the next step. (See 01–40A–9 PCM REMOVAL/INSTALLATION [L3].)
		No	Go to the next step.
4	**VERIFY AFTER REPAIR PROCEDURE** • Perform the "After Repair Procedure". (See 01–02A–12 AFTER REPAIR PROCEDURE [L3].) • Is any DTC present?	Yes	Go to the applicable DTC inspection. (See 01–02A–18 DTC TABLE [L3].)
		No	Troubleshooting completed.

DTC P0604 [L3]

E6U010200600W03

DTC P0604	PCM RAM error
DETECTION CONDITION	• PCM internal RAM malfunction. **Diagnostic support note** • This is a continuous monitor (CCM). • MIL illuminates if PCM detects the above malfunction condition during first drive cycle. • PENDING CODE is available if PCM detects the above malfunction condition. • FREEZE FRAME DATA is available. • DTC is stored in PCM memory.
POSSIBLE CAUSE	• PCM internal RAM malfunction

Diagnostic procedure

STEP	INSPECTION		ACTION
1	**VERIFY FREEZE FRAME DATA HAS BEEN RECORDED** • Has FREEZE FRAME DATA been recorded?	Yes	Go to the next step.
		No	Record FREEZE FRAME DATA on repair order, then go to the next step.
2	**VERIFY RELATED REPAIR INFORMATION AVAILABILITY** • Check for related Service Bulletins and/or on-line repair information availability. • Is any related repair information available?	Yes	Perform repair or diagnosis according to the available repair information. • If the vehicle is not repaired, go to the next step.
		No	Go to the next step.
3	**VERIFY TROUBLESHOOTING OF P0604 COMPLETED** • Make sure to reconnect all disconnected connectors. • Clear the DTC from the PCM memory using the WDS or equivalent. • Start engine. • Is same DTC present?	Yes	Replace PCM, go to the next step. (See 01–40A–9 PCM REMOVAL/INSTALLATION [L3].)
		No	Go to the next step.
4	**VERIFY AFTER REPAIR PROCEDURE** • Perform the "After Repair Procedure". (See 01–02A–12 AFTER REPAIR PROCEDURE [L3].) • Is any DTC present?	Yes	Go to the applicable DTC inspection. (See 01–02A–18 DTC TABLE [L3].)
		No	Troubleshooting completed.

DTC P0606 [L3]

E6U010200600W04

DTC P0606	PCM processor
DETECTION CONDITION	• PCM internal CPU malfunction. **Diagnostic support note** • This is a continuous monitor (CCM). • MIL illuminates if PCM detects the above malfunction condition during first drive cycle. • PENDING CODE is available if PCM detects the above malfunction condition. • FREEZE FRAME DATA is available. • DTC is stored in PCM memory.
POSSIBLE CAUSE	• PCM internal CPU malfunction

Diagnostic procedure

STEP	INSPECTION		ACTION
1	**VERIFY FREEZE FRAME DATA HAS BEEN RECORDED** • Has FREEZE FRAME DATA been recorded?	Yes	Go to the next step.
		No	Record FREEZE FRAME DATA on repair order, then go to the next step.
2	**VERIFY RELATED REPAIR INFORMATION AVAILABILITY** • Check for related Service Bulletins and/or on-line repair information availability. • Is any related repair information available?	Yes	Perform repair or diagnosis according to the available repair information. • If the vehicle is not repaired, go to the next step.
		No	Go to the next step.
3	**VERIFY TROUBLESHOOTING OF P0606 COMPLETED** • Make sure to reconnect all disconnected connectors. • Clear the DTC from the PCM memory using the WDS or equivalent. • Start engine. • Is same DTC present?	Yes	Replace PCM, go to the next step. (See 01–40A–9 PCM REMOVAL/INSTALLATION [L3].)
		No	Go to the next step.
4	**VERIFY AFTER REPAIR PROCEDURE** • Perform the "After Repair Procedure". (See 01–02A–12 AFTER REPAIR PROCEDURE [L3].) • Is any DTC present?	Yes	Go to the applicable DTC inspection. (See 01–02A–18 DTC TABLE [L3].)
		No	Troubleshooting completed.

DTC P0607 [L3]

E6U010200600W05

DTC P0607	Control module performance
DETECTION CONDITION	• PCM internal malfunction. **Diagnostic support note** • This is a continuous monitor (Other). • MIL does not illuminate. • PENDING CODE is available if PCM detects the above malfunction condition. • FREEZE FRAME DATA is not available. • DTC is stored in PCM memory.
POSSIBLE CAUSE	• PCM internal malfunction

Diagnostic procedure

STEP	INSPECTION		ACTION
1	**VERIFY FREEZE FRAME DATA HAS BEEN RECORDED** • Has FREEZE FRAME DATA been recorded?	Yes	Go to the next step.
		No	Record FREEZE FRAME DATA on repair order, then go to the next step.
2	**VERIFY RELATED REPAIR INFORMATION AVAILABILITY** • Check for related Service Bulletins and/or on-line repair information availability. • Is any related repair information available?	Yes	Perform repair or diagnosis according to the available repair information. • If the vehicle is not repaired, go to the next step.
		No	Go to the next step.
3	**VERIFY TROUBLESHOOTING OF P0607 COMPLETED** • Make sure to reconnect all disconnected connectors. • Clear the DTC from the PCM memory using the WDS or equivalent. • Start engine. • Is same DTC present?	Yes	Replace PCM, go to the next step. (See 01–40A–9 PCM REMOVAL/INSTALLATION [L3].)
		No	Go to the next step.
4	**VERIFY AFTER REPAIR PROCEDURE** • Perform the "After Repair Procedure". (See 01–02A–12 AFTER REPAIR PROCEDURE [L3].) • Is any DTC present?	Yes	Go to the applicable DTC inspection. (See 01–02A–18 DTC TABLE [L3].)
		No	Troubleshooting completed.

DTC P0610 [L3]

E6U010200600W06

DTC P0610	Control module vehicle options error
DETECTION CONDITION	• PCM data configuration error **Diagnostic support note** • This is a continuous monitor (CCM). • MIL illuminates if PCM detects the above malfunction condition during first drive cycle. • PENDING CODE is available if PCM detects the above malfunction condition. • FREEZE FRAME DATA is available. • DTC is stored in PCM memory.
POSSIBLE CAUSE	• Configuration procedure has not been completed. • PCM malfunction

Diagnostic procedure

STEP	INSPECTION		ACTION
1	**VERIFY FREEZE FRAME DATA HAS BEEN RECORDED** • Has FREEZE FRAME DATA been recorded?	Yes	Go to the next step.
		No	Record FREEZE FRAME DATA on repair order, then go to the next step.
2	**VERIFY RELATED REPAIR INFORMATION AVAILABILITY** • Check for related Service Bulletins and/or on-line repair information availability. • Is any related repair information available?	Yes	Perform repair or diagnosis according to the available repair information. • If the vehicle is not repaired, go to the next step.
		No	Perform PCM configuration procedure, then go to the next step. (See 01–40A–24 PCM REPLACEMENT [L3].)
3	**VERIFY TROUBLESHOOTING OF DTC P0610 COMPLETED** • Make sure to reconnect all disconnected connectors. • Turn ignition switch to ON (Engine off). • Clear the DTC from the PCM memory using the WDS or equivalent. • Start engine and warm it up completely. • Is same DTC present?	Yes	Replace PCM, then go to the next step. (See 01–40A–9 PCM REMOVAL/INSTALLATION [L3].)
		No	Go to the next step.
4	**VERIFY AFTER REPAIR PROCEDURE** • Perform the "After Repair Procedure". (See 01–02A–12 AFTER REPAIR PROCEDURE [L3].) • Is any DTC present?	Yes	Go to the applicable DTC inspection. (See 01–02A–18 DTC TABLE [L3].)
		No	Troubleshooting completed.

DTC P0638 [L3]

E6U010200600W07

DTC P0638	Throttle actuator control range/performance
DETECTION CONDITION	• The PCM compares the actual TP with the target TP when the engine is running. If the difference is more than the specification, the PCM determines that there is a throttle actuator control circuit range/ performance problem. **Diagnostic support note** • This is a continuous monitor (CCM). • The MIL illuminates if the PCM detects the above malfunction condition in the first drive cycle. • PENDING CODE is available if the PCM detects the above malfunction condition. • FREEZE FRAME DATA is available. • The DTC is stored in the PCM memory.
POSSIBLE CAUSE	• Throttle actuator malfunction • Throttle valve malfunction • PCM malfunction

Diagnostic procedure

STEP	INSPECTION		ACTION
1	**VERIFY FREEZE FRAME DATA HAS BEEN RECORDED** • Has FREEZE FRAME DATA been recorded?	Yes	Go to the next step.
		No	Record FREEZE FRAME DATA on repair order, then go to the next step.
2	**VERIFY RELATED REPAIR INFORMATION AVAILABILITY** • Check for related Service Bulletins and/or on-line repair information availability. • Is any related repair information available?	Yes	Perform repair or diagnosis according to the available repair information. • If the vehicle is not repaired, go to the next step.
		No	Go to the next step.
3	**INSPECT FOR OTHER DTCS** • Have other DTCs been stored?	Yes	Perform diagnostic procedure for applicable DTCs.
		No	Go to the next step.
4	**VERIFY TROUBLESHOOTING OF P0638 COMPLETED** • Make sure to reconnect all disconnected connectors. • Clear the DTC from the PCM memory using the WDS or equivalent. • Turn the ignition switch off. • Start the engine and let it idle. • Is same DTC present?	Yes	Replace PCM, go to the next step. (See 01–40A–9 PCM REMOVAL/INSTALLATION [L3].)
		No	Go to the next step.
5	**VERIFY AFTER REPAIR PROCEDURE** • Perform the "After Repair Procedure". (See 01–02A–12 AFTER REPAIR PROCEDURE [L3].) • Is any DTC present?	Yes	Go to the applicable DTC inspection. (See 01–02A–18 DTC TABLE [L3].)
		No	Troubleshooting completed.

DTC P0661 [L3]

E6U010200600W08

DTC P0661	Variable intake air system solenoid valve circuit low input
DETECTION CONDITION	• PCM monitors variable intake air solenoid valve control signal. If PCM turns variable intake air solenoid valve off but voltage still remains low, PCM determines that variable intake air solenoid valve circuit has malfunction. **Diagnostic support note** • This is a continuous monitor (Other). • MIL does not illuminate. • PENDING CODE is available if PCM detects the above malfunction condition. • FREEZE FRAME DATA is not available. • DTC is stored in the PCM memory.
POSSIBLE CAUSE	• Variable intake air solenoid valve malfunction • Open circuit in wiring harness between main relay and variable intake air solenoid valve terminal A • Open circuit in wiring harness between variable intake air solenoid valve terminal B and PCM terminal 2J • Short to ground in wiring harness between variable intake air solenoid valve terminal B and PCM terminal 2J • Connector or terminal malfunction • PCM malfunction

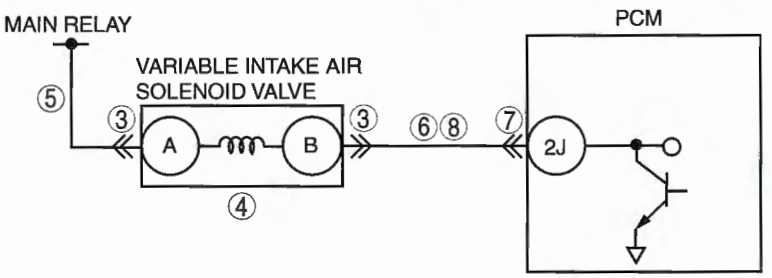

VARIABLE INTAKE AIR SOLENOID VALVE HARNESS SIDE CONNECTOR

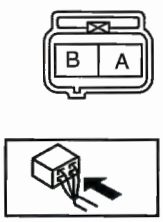

PCM WIRING HARNESS-SIDE CONNECTOR

2BE	2BA	2AW	2AS	2AO	2AK	2AG	2AC	2Y	2U	2Q	2M	2I	2E	2A
2BF	2BB	2AX	2AT	2AP	2AL	2AH	2AD	2Z	2V	2R	2N	2J	2F	2B
2BG	2BC	2AY	2AU	2AQ	2AM	2AI	2AE	2AA	2W	2S	2O	2K	2G	2C
2BH	2BD	2AZ	2AV	2AR	2AN	2AJ	2AF	2AB	2X	2T	2P	2L	2H	2D

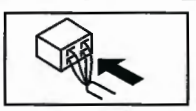

Diagnostic procedure

STEP	INSPECTION		ACTION
1	**VERIFY FREEZE FRAME DATA HAS BEEN RECORDED** • Has FREEZE FRAME DATA been recorded?	Yes	Go to the next step.
		No	Record FREEZE FRAME DATA on repair order, then go to the next step.
2	**VERIFY RELATED REPAIR INFORMATION AVAILABILITY** • Check for related Service Bulletins and/or on-line repair information availability. • Is any related repair information available?	Yes	Perform repair or diagnosis according to the available repair information. • If the vehicle is not repaired, go to the next step.
		No	Go to the next step.
3	**INSPECT VARIABLE INTAKE AIR SOLENOID VALVE CONNECTOR FOR POOR CONNECTION** • Turn the ignition switch off. • Disconnect variable intake air solenoid valve connector. • Inspect for poor connection (such as damaged/ pulled-out pins, corrosion). • Is there any malfunction?	Yes	Repair or replace the terminal, then go to Step 9.
		No	Go to the next step.

STEP	INSPECTION		ACTION
4	**INSPECT VARIABLE INTAKE AIR SOLENOID VALVE MALFUNCTION** • Perform variable intake air solenoid valve inspection. (See 01–13A–8 VARIABLE INTAKE AIR SOLENOID VALVE INSPECTION [L3].) • Is variable intake air solenoid valve normal?	Yes	Go to the next step.
		No	Replace variable intake air solenoid valve, then go to step 9.
5	**INSPECT VARIABLE INTAKE AIR SOLENOID VALVE POWER SUPPLY CIRCUIT FOR OPEN CIRCUIT** • Turn ignition switch to ON (Engine off). • Measure voltage between variable intake air solenoid valve terminal A (wiring harness-side) and body ground. • Is voltage **B+**?	Yes	Go to the next step.
		No	Repair or replace harness for open circuit, then go to Step 9.
6	**INSPECT VARIABLE INTAKE AIR SOLENOID VALVE CONTROL CIRCUIT FOR SHORT TO GROUND** • Inspect continuity between variable intake air solenoid valve terminal B (wiring harness-side) and body ground. • Is there continuity?	Yes	Repair or replace harness for short to ground, then go to Step 9.
		No	Go to the next step.
7	**INSPECT PCM CONNECTOR FOR POOR CONNECTION** • Disconnect PCM connector. • Inspect for poor connection at terminal 4R. (such as damaged, pulled-out pins, corrosion). • Is there any malfunction?	Yes	Repair terminal, then go to Step 9.
		No	Go to the next step.
8	**INSPECT VARIABLE INTAKE AIR SOLENOID VALVE CONTROL CIRCUIT FOR OPEN CIRCUIT** • Inspect for continuity between variable intake air solenoid valve terminal A (wiring harness-side) and PCM terminal 2J (wiring harness-side). • Is there continuity?	Yes	Go to the next step.
		No	Repair or replace harness for open circuit, then go to the next step.
9	**VERIFY TROUBLESHOOTING OF DTC P0661 COMPLETED** • Make sure to reconnect all disconnected connectors. • Turn ignition switch to ON (Engine off). • Clear the DTC from the PCM memory using the WDS or equivalent. • Turn the ignition switch off. • Start engine and run engine speed **above 4,400 rpm** few times. • Retrieve any DTC. • Is PENDING CODE for this DTC present?	Yes	Replace PCM, then go to the next step. (See 01–40A–9 PCM REMOVAL/INSTALLATION [L3].)
		No	Go to the next step.
10	**VERIFY AFTER REPAIR PROCEDURE** • Perform the "After Repair Procedure". (See 01–02A–12 AFTER REPAIR PROCEDURE [L3].) • Is any DTC present?	Yes	Go to the applicable DTC inspection. (See 01–02A–18 DTC TABLE [L3].)
		No	Troubleshooting completed.

DTC P0662 [L3]

E6U010200600W09

DTC P0662	Variable intake air system solenoid valve circuit high input
DETECTION CONDITION	• PCM monitors variable intake air solenoid valve control signal. If PCM turns variable intake air solenoid valve on but voltage still remains high, PCM determines that variable intake air solenoid valve circuit has malfunction. **Diagnostic support note** • This is a continuous monitor (Other). • MIL does not illuminate. • PENDING CODE is available if PCM detects the above malfunction condition. • FREEZE FRAME DATA is not available. • DTC is stored in the PCM memory.
POSSIBLE CAUSE	• Variable intake air solenoid valve malfunction • Short to power supply between variable intake air solenoid valve terminal A and PCM terminal 2J • Shorted variable intake air solenoid valve or PCM connector • PCM malfunction

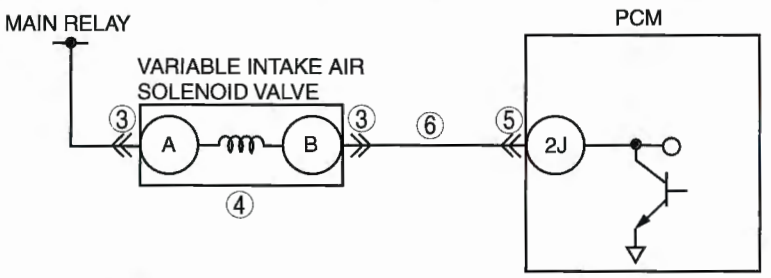

VARIABLE INTAKE AIR SOLENOID VALVE HARNESS SIDE CONNECTOR

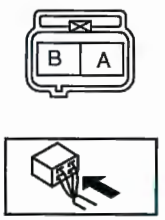

PCM WIRING HARNESS-SIDE CONNECTOR

2BE	2BA	2AW	2AS	2AO	2AK	2AG	2AC	2Y	2U	2Q	2M	2I	2E	2A
2BF	2BB	2AX	2AT	2AP	2AL	2AH	2AD	2Z	2V	2R	2N	2J	2F	2B
2BG	2BC	2AY	2AU	2AQ	2AM	2AI	2AE	2AA	2W	2S	2O	2K	2G	2C
2BH	2BD	2AZ	2AV	2AR	2AN	2AJ	2AF	2AB	2X	2T	2P	2L	2H	2D

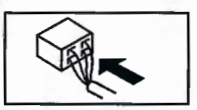

Diagnostic procedure

STEP	INSPECTION		ACTION
1	**VERIFY FREEZE FRAME DATA HAS BEEN RECORDED** • Has FREEZE FRAME DATA been recorded?	Yes	Go to the next step.
		No	Record FREEZE FRAME DATA on repair order, then go to the next step.
2	**VERIFY RELATED REPAIR INFORMATION AVAILABILITY** • Check for related Service Bulletins and/or on-line repair information availability. • Is any repair information available?	Yes	Perform repair or diagnosis according to the available repair information. • If the vehicle is not repaired, go to the next step.
		No	Go to the next step.
3	**INSPECT VARIABLE INTAKE AIR SOLENOID VALVE CONNECTOR FOR POOR CONNECTION** • Turn the ignition switch off. • Disconnect variable intake air solenoid valve connector. • Inspect for poor connection (such as damaged/ pulled-out pins, corrosion). • Is there any malfunction?	Yes	Repair or replace the terminal, then go to Step 7.
		No	Go to the next step.
4	**INSPECT VARIABLE INTAKE AIR SOLENOID VALVE MALFUNCTION** • Perform variable intake air solenoid valve inspection. (See 01–13A–8 VARIABLE INTAKE AIR SOLENOID VALVE INSPECTION [L3].) • Is VIS solenoid valve normal?	Yes	Go to the next step.
		No	Replace variable intake air solenoid valve, then go to Step 7.
5	**INSPECT PCM CONNECTOR FOR POOR CONNECTION** • Turn the ignition switch off. • Disconnect PCM connector. • Inspect for poor connection at terminal 2J. (such as damaged, pulled-out pins, corrosion). • Is there any malfunction?	Yes	Repair terminal, then go to Step 7.
		No	Go to the next step.
6	**INSPECT VARIABLE INTAKE AIR SOLENOID VALVE CONTROL CIRCUIT SHORT TO POWER SUPPLY** • Turn ignition switch to ON (Engine off). • Measure voltage between variable intake air solenoid valve terminal A (wiring harness-side) and body ground. • Is voltage **B+**?	Yes	Repair or replace harness for open circuit, then go to the next step.
		No	Go to the next step.
7	**VERIFY TROUBLESHOOTING OF DTC P0662 COMPLETED** • Make sure to reconnect all disconnected connectors. • Turn ignition switch to ON (Engine off). • Clear the DTC from the PCM memory using the WDS or equivalent. • Turn ignition switch to OFF. • Start engine and run engine speed **above 4,400 rpm** few times. • Retrieve any DTC. • Is PENDING CODE for this DTC present?	Yes	Replace PCM, then go to the next step. (See 01–40A–9 PCM REMOVAL/INSTALLATION [L3].)
		No	Go to the next step.
8	**VERIFY AFTER REPAIR PROCEDURE** • Perform the "After Repair Procedure". (See 01–02A–12 AFTER REPAIR PROCEDURE [L3].) • Is any DTC present?	Yes	Go to the applicable DTC inspection. (See 01–02A–18 DTC TABLE [L3].)
		No	Troubleshooting completed.

DTC P0703 [L3]

E6U010200700W03

DTC P0703	Brake switch input circuit problem
DETECTION CONDITION	• The PCM monitors changes in input voltage from the brake switch No.1. If the PCM does not the voltage changes while alternately accelerating and decelerating **8 times**, the PCM determines that the brake switch No.1 circuit has a malfunction. **Diagnostic support note** • This is a continuous monitor (CCM). • The MIL illuminates if the PCM detects the above malfunction condition in two consecutive drive cycles or in one drive cycle while the DTC for the same malfunction has been stored in the PCM. • PENDING CODE is available if the PCM detects the above malfunction condition during first drive cycle. • FREEZE FRAME DATA is available. • Are any DTCs is stored in the PCM memory.
POSSIBLE CAUSE	• Brake switch malfunction • Poor connection of brake switch connector or PCM connector • Short to power supply in wiring harness between brake switch No.1 terminal D and PCM connector terminal 1AB • Open circuit in wiring harness between brake switch No.1 terminal D and PCM connector terminal 1AB • Open circuit in wiring harness between battery positive terminal and brake switch No.1 terminal A • PCM malfunction

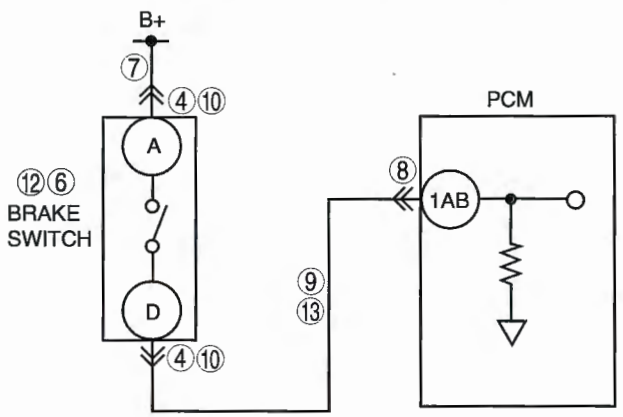

BRAKE SWITCH
WIRING HARNESS-SIDE CONNECTOR

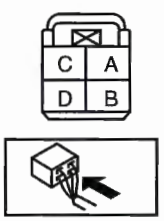

PCM
WIRING HARNESS-SIDE CONNECTOR

1BE	1BA	1AW	1AS	1AO	1AK	1AG	1AC	1Y	1U	1Q	1M	1I	1E	1A
1BF	1BB	1AX	1AT	1AP	1AL	1AH	1AD	1Z	1V	1R	1N	1J	1F	1B
1BG	1BC	1AY	1AU	1AQ	1AM	1AI	1AE	1AA	1W	1S	1O	1K	1G	1C
1BH	1BD	1AZ	1AV	1AR	1AN	1AJ	1AF	1AB	1X	1T	1P	1L	1H	1D

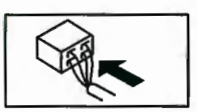

Diagnostic procedure

STEP	INSPECTION		ACTION
1	**VERIFY FREEZE FRAME DATA AND DIAGNOSTIC MONITORING TEST RESULTS HAS BEEN RECORDED** • Has FREEZE FRAME DATA been recorded?	Yes	Go to the next step.
		No	Record the FREEZE FRAME on the repair order, then go to the next step.
2	**VERIFY RELATED REPAIR INFORMATION AVAILABILITY** • Check for related Service Bulletins and/or on-line repair information availability. • Is any repair information available?	Yes	Perform repair or diagnosis according to the available repair information. • If the vehicle is not repaired, go to the next step.
		No	Go to the next step.
3	**CLASSIFY HIGH INPUT OR LOW INPUT** • Connect the WDS or equivalent to DLC-2. • Access BOO PID. • Verify BOO PID during brake pedal operation. • Is BOO PID always OFF?	Yes	Go to the next step.
		No	Go to the next step.

STEP	INSPECTION		ACTION
4	**INSPECT BRAKE SWITCH CONNECTOR FOR POOR CONNECTION** • Turn the ignition switch off. • Disconnect the brake switch connector. • Inspect for poor connection (such as damaged/ pulled-out pins, corrosion). • Is there any malfunction?	Yes	Repair or replace the terminal, then go to Step 13.
		No	Go to the next step.
5	**CLASSIFY BRAKE SWITCH OR CIRCUIT** • Connect the WDS or equivalent to DLC-2. • Access BOO PID. • Connect a jumper wire between brake switch No.1 terminal A and D. • Is BOO PID on?	Yes	Go to the next step.
		No	Go to Step 7.
6	**INSPECT BRAKE SWITCH** • Inspect the brake switch. (See 04–11–9 BRAKE SWITCH INSPECTION.) • Is the brake switch normal?	Yes	Go to Step 13.
		No	Replace the brake switch, then go to Step 13.
7	**INSPECT BRAKE SWITCH POWER CIRCUIT FOR OPEN CIRCUIT** • Measure the voltage between brake switch terminal A and body ground. • Is the voltage **B+**?	Yes	Go to the next step.
		No	Repair or replace the brake switch power circuit for open, then go to Step 13.
8	**INSPECT PCM CONNECTOR FOR POOR CONNECTION** • Turn the ignition switch off. • Disconnect the PCM connector. • Inspect for poor connection (such as damaged/ pulled-out pins, corrosion). • Is there any malfunction?	Yes	Repair or replace the terminal, then go to Step 13.
		No	Go to the next step.
9	**INSPECT BRAKE SWITCH SIGNAL CIRCUIT FOR OPEN CIRCUIT** • Inspect for continuity between brake switch terminal D and PCM terminal 1AB. • Is there continuity?	Yes	Go to Step 13.
		No	Repair or replace the wiring harness for an open circuit, then go to Step 13.
10	**CLASSIFY BRAKE SWITCH OR CIRCUIT** • Connect the WDS or equivalent to DLC-2. • Access BOO PID. • Verify that BOO PID changes from ON to OFF when the brake switch connector disconnected. • Does BOO PID change from ON to OFF?	Yes	Go to the next step.
		No	Go to Step 12.
11	**INSPECT BRAKE SWITCH** • Inspect the brake switch. (See 04–11–9 BRAKE SWITCH INSPECTION.) • Is the brake switch normal?	Yes	Go to Step 13.
		No	Replace the brake switch, then go to Step 13.
12	**INSPECT BRAKE SWITCH SIGNAL CIRCUIT FOR SHORT TO POWER SUPPLY** • Measure the voltage between brake switch terminal D and body ground. • Is the voltage **B+**?	Yes	Repair or replace the wiring harness for short to power supply, then go to the next step.
		No	Go to the next step.
13	**VERIFY TROUBLESHOOTING OF DTC P0703 COMPLETED** • Make sure to reconnect all disconnected connectors. • Clear the DTC from the PCM memory using the WDS or equivalent. • Drive the vehicle **30 km/h {18.6 mph} or more**. • Depress and release the brake pedal **more than 8 times** while driving vehicle. • Is the PENDING CODE for this DTC present?	Yes	Replace the PCM, then go to the next step. (See 01–40A–9 PCM REMOVAL/INSTALLATION [L3].)
		No	Go to the next step.
14	**VERIFY AFTER REPAIR PROCEDURE** • Perform the "AFTER REPAIR PROCEDURE". (See 01–02A–12 AFTER REPAIR PROCEDURE [L3].) • Are any DTC present?	Yes	Go to the applicable DTC troubleshooting. (See 01–02A–18 DTC TABLE [L3].)
		No	Troubleshooting completed.

DTC P0704 [L3]

E6U010200700W04

DTC P0704	Clutch pedal position (CPP) switch input circuit problem
DETECTION CONDITION	• The PCM monitors changes in input voltage from the CPP switch. If the PCM does not detect the voltage changes while the vehicle runs with vehicle speed **above 30 km/h {19 mph}** and stops **8 times** alternately, the PCM determines that the CPP switch circuit has a malfunction. **Diagnostic support note** • This is a continuous monitor (CCM). • The MIL illuminates if the PCM detects the above malfunction condition in two consecutive drive cycles or in one drive cycle while the DTC for the same malfunction has been stored in the PCM. • PENDING CODE is available if the PCM detects the above malfunction condition during first drive cycle. • FREEZE FRAME DATA is available. • Are any DTCs is stored in the PCM memory.
POSSIBLE CAUSE	• CPP switch malfunction • Poor connection of CPP switch connector or PCM connector • Short to ground in wiring harness between CPP switch terminal B and PCM terminal 1D • Open circuit in wiring harness between CPP switch terminal B and PCM terminal 1D • Open circuit in wiring harness between ground and CPP switch terminal D • PCM malfunction

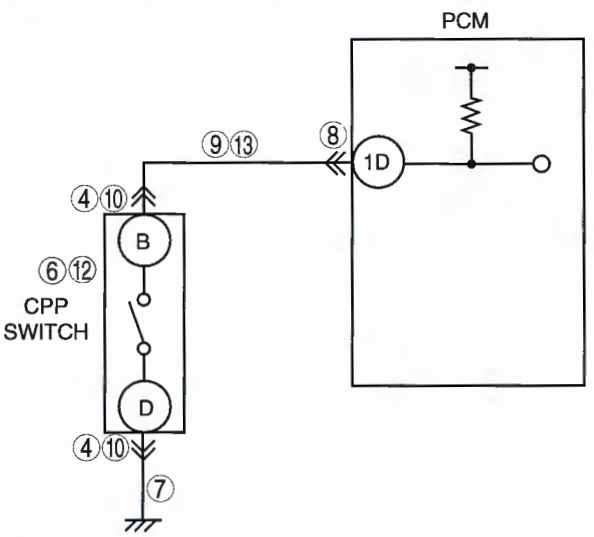

CPP SWITCH
WIRING HARNESS-SIDE CONNECTOR

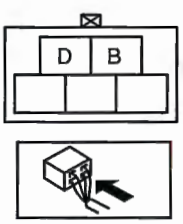

PCM
WIRING HARNESS-SIDE CONNECTOR

1BE	1BA	1AW	1AS	1AO	1AK	1AG	1AC	1Y	1U	1Q	1M	1I	1E	1A
1BF	1BB	1AX	1AT	1AP	1AL	1AH	1AD	1Z	1V	1R	1N	1J	1F	1B
1BG	1BC	1AY	1AU	1AQ	1AM	1AI	1AE	1AA	1W	1S	1O	1K	1G	1C
1BH	1BD	1AZ	1AV	1AR	1AN	1AJ	1AF	1AB	1X	1T	1P	1L	1H	1D

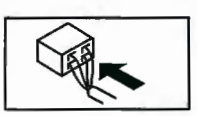

Diagnostic procedure

STEP	INSPECTION		ACTION
1	**VERIFY FREEZE FRAME DATA AND DIAGNOSTIC MONITORING TEST RESULTS HAS BEEN RECORDED** • Has FREEZE FRAME DATA been recorded?	Yes	Go to the next step.
		No	Record the FREEZE FRAME on the repair order, then go to the next step.
2	**VERIFY RELATED REPAIR INFORMATION AVAILABILITY** • Verify related Service Information availability. • Is any related Service Information available?	Yes	Perform repair or diagnosis according to the available Service information. If the vehicle is not repaired, go to the next step.
		No	Go to the next step.

STEP	INSPECTION		ACTION
3	**CLASSIFY HIGH INPUT OR LOW INPUT** • Connect the WDS or equivalent to DLC-2. • Access CPP PID. • Verify CPP PID during clutch pedal operation. • Is CPP PID always OFF?.	Yes	Go to the next step.
		No	Go to Step 10.
4	**INSPECT CPP SWITCH CONNECTOR FOR POOR CONNECTION** • Turn the ignition switch off. • Disconnect the CPP switch connector. • Inspect for poor connection (such as damaged/ pulled-out pins, corrosion). • Is there any malfunction?	Yes	Repair or replace the terminal, then go to Step 14.
		No	Go to the next step.
5	**CLASSIFY CPP SWITCH OR CIRCUIT** • Connect the WDS or equivalent to DLC-2. • Access CPP PID. • Connect a jumper wire between CPP switch terminal B and D. • Is CPP PID on?	Yes	Go to the next step.
		No	Go to Step 7.
6	**INSPECT CPP SWITCH** • Inspect the CPP switch. (See 01–40A–25 CLUTCH PEDAL POSITION (CPP) SWITCH INSPECTION [L3].) • Is the CPP switch normal?	Yes	Go to Step 14.
		No	Replace the CPP switch, then go to Step 14.
7	**INSPECT CPP SWITCH GROUND CIRCUIT FOR OPEN CIRCUIT** • Inspect for continuity between CPP switch terminal D and ground. • Is there continuity?	Yes	Go to the next step.
		No	Repair or replace the CPP switch power supply for an open circuit, then go to Step 14.
8	**INSPECT PCM CONNECTOR FOR POOR CONNECTION** • Turn the ignition switch off. • Disconnect the PCM connector. • Inspect for poor connection (such as damaged/ pulled-out pins, corrosion). • Is there any malfunction?	Yes	Repair or replace the terminal, then go to Step 14.
		No	Go to the next step.
9	**INSPECT CPP SWITCH SIGNAL CIRCUIT FOR OPEN CIRCUIT** • Inspect for continuity between CPP switch terminal B and PCM terminal 1D. • Is there continuity?	Yes	Repair or replace the wiring harness for an open circuit, then go to Step 14.
		No	Go to Step 14.
10	**INSPECT CPP SWITCH CONNECTOR FOR POOR CONNECTION** • Turn the ignition switch off. • Disconnect the CPP switch connector. • Inspect for poor connection (such as damaged/ pulled-out pins, corrosion). • Is there any malfunction?	Yes	Repair or replace the terminal, then go to Step 14.
		No	Go to the next step.
11	**CLASSIFY CPP SWITCH OR CIRCUIT** • Connect the WDS or equivalent to DLC-2. • Access CPP PID. • Verify that CPP PID changes from ON to OFF when CPP switch connector disconnected. • Does CPP PID change from ON to OFF?	Yes	Go to the next step.
		No	Go to Step 13.
12	**INSPECT CPP SWITCH** • Inspect the CPP switch. (See 01–40A–25 CLUTCH PEDAL POSITION (CPP) SWITCH INSPECTION [L3].) • Is the CPP switch normal?	Yes	Go to Step 14.
		No	Replace the CPP switch, then go to Step 14.
13	**INSPECT CPP SWITCH SIGNAL CIRCUIT FOR SHORT TO GROUND** • Inspect for continuity between CPP switch terminal B and ground. • Is there continuity?	Yes	Repair or replace the wiring harness for short to ground, then go to Step 14.
		No	Go to the next step.

STEP	INSPECTION		ACTION
14	**VERIFY TROUBLESHOOTING OF DTC P0704 COMPLETED** • Make sure to reconnect all disconnected connectors. • Start the engine. • Clear the DTC from the PCM memory using the WDS or equivalent. • Operate the clutch pedal while the vehicle runs and stops **8 times** alternately. • Is the PENDING CODE for this DTC present?	Yes	Replace the PCM, then go to the next step. (See 01–40A–9 PCM REMOVAL/INSTALLATION [L3].)
		No	Go to the next step.
15	**VERIFY AFTER REPAIR PROCEDURE** • Perform the "AFTER REPAIR PROCEDURE". (See 01–02A–12 AFTER REPAIR PROCEDURE [L3].) • Are any DTC present?	Yes	Go to the applicable DTC troubleshooting. (See 01–02A–18 DTC TABLE [L3].)
		No	Troubleshooting completed.

DTC P0850 [L3]

E6U010200800W01

DTC P0850	Neutral switch circuit malfunction
DETECTION CONDITION	• PCM monitors changes in input voltage from neutral switch. If PCM does not detect PCM terminal 1X voltage changes while running vehicle with vehicle speed **above 30 km/h {19 mph}** and clutch pedal turns press and depress **10 times** repeatedly, PCM determines that neutral switch circuit has malfunction **Diagnostic support note** • This is a continuous monitor (CCM). • MIL illuminates if PCM detects above malfunction condition in two consecutive drive cycles or in one drive cycle while DTC for the same malfunction has been stored in PCM. • PENDING CODE is available if PCM detects the above malfunction condition during first drive cycle. • FREEZE FRAME DATA is available. • DTC is stored in PCM memory.
POSSIBLE CAUSE	• Neutral switch malfunction • Poor connection of neutral switch connector or PCM connector • Short to ground between neutral switch terminal B and PCM connector terminal 1X • Open circuit in wiring harness between neutral switch terminal B and PCM connector terminal 1X • Open circuit in wiring harness between ground and brake switch terminal A. • PCM malfunction

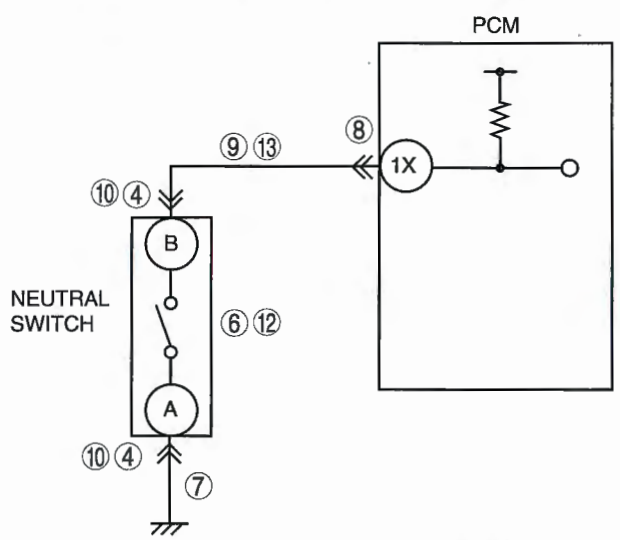

NEUTRAL SWITCH HARNESS SIDE CONNECTOR

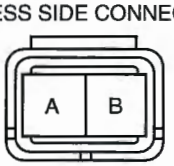

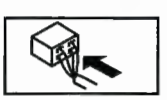

PCM HARNESS SIDE CONNECTOR

1BE	1BA	1AW	1AS	1AO	1AK	1AG	1AC	1Y	1U	1Q	1M	1I	1E	1A
1BF	1BB	1AX	1AT	1AP	1AL	1AH	1AD	1Z	1V	1R	1N	1J	1F	1B
1BG	1BC	1AY	1AU	1AQ	1AM	1AI	1AE	1AA	1W	1S	1O	1K	1G	1C
1BH	1BD	1AZ	1AV	1AR	1AN	1AJ	1AF	1AB	1X	1T	1P	1L	1H	1D

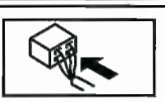

Diagnostic procedure

STEP	INSPECTION		ACTION
1	**VERIFY FREEZE FRAME DATA HAS BEEN RECORDED** • Has FREEZE FRAME DATA been recorded?	Yes	Go to the next step.
		No	Record FREEZE FRAME DATA on repair order, then go to the next step.
2	**VERIFY RELATED REPAIR INFORMATION AVAILABILITY** • Check for related Service Bulletins and/or on-line repair information availability. • Is any related repair information available?	Yes	Perform repair or diagnosis according to the available repair information. • If the vehicle is not repaired, go to the next step.
		No	Go to the next step.
3	**CLASSIFY HIGH INPUT OR LOW INPUT** • Connect WDS or equivalent to DLC-2. • Access CPP/PNP PID. • Verify CPP/PNP PID when gear is neutral position. • Is CPP/PNP PID always OFF?.	Yes	Go to Next step.
		No	Go to Step 10.
4	**INSPECT NEUTRAL SWITCH CONNECTOR FOR POOR CONNECTION** • Turn ignition switch to OFF. • Disconnect neutral switch connector. • Inspect for poor connection (such as damaged/ pulled-out pins, corrosion). • Is there any malfunction?	Yes	Repair or replace the terminal, then go to Step 14.
		No	Go to the next step.
5	**CLASSIFY NEUTRAL SWITCH OR CIRCUIT** • Connect WDS or equivalent to DLC-2. • Access CPP/PNP PID. • Connect a jumper wire between neutral switch terminal A and B (wiring harness-side). • Is CPP/PNP PID on?	Yes	Go to the next step.
		No	Go to Step 7.
6	**INSPECT NEUTRAL SWITCH** • Perform neutral switch inspection. (See 01–40A–26 NEUTRAL SWITCH INSPECTION [L3].) • Is neutral switch normal?	Yes	Go to Step 14.
		No	Replace neutral switch, then go to Step 14.
7	**INSPECT NEUTRAL SWITCH GROUND CIRCUIT FOR OPEN CIRCUIT** • Inspect continuity between neutral switch terminal A (wiring harness-side) and body ground. • Is there continuity?	Yes	Go to the next step.
		No	Repair or replace neutral switch power circuit for open circuit, then Go to Step 14.
8	**INSPECT PCM CONNECTOR FOR POOR CONNECTION** • Turn ignition switch to OFF. • Disconnect PCM connector. • Inspect for poor connection (such as damaged/ pulled-out pins, corrosion). • Is there any malfunction?	Yes	Repair or replace the terminal, then go to Step 14.
		No	Go to the next step.
9	**INSPECT NEUTRAL SWITCH SIGNAL CIRCUIT FOR OPEN CIRCUIT** • Inspect continuity between neutral switch terminal B (wiring harness-side) and PCM terminal 1X (wiring harness-side). • Is there continuity?	Yes	Repair or replace harness for open circuit, then go to Step 14.
		No	Go to Step 14.
10	**INSPECT NEUTRAL SWITCH CONNECTOR FOR POOR CONNECTION** • Turn ignition switch to OFF. • Disconnect neutral switch connector. • Inspect for poor connection (such as damaged/ pulled-out pins, corrosion). • Is there any malfunction?	Yes	Repair or replace the terminal, then go to Step 14.
		No	Go to the next step.

STEP	INSPECTION		ACTION
11	**CLASSIFY NEUTRAL SWITCH OR CIRCUIT** • Connect WDS or equivalent to DLC-2. • Access CPP/PNP PID. • Verify that CPP/PNP PID changes from ON to OFF when neutral switch connector disconnected. • Does CPP/PNP PID change from ON to OFF?	Yes	Go to the next step.
		No	Go to Step 13.
12	**INSPECT NEUTRAL SWITCH** • Perform neutral switch inspection. (See 01–40A–26 NEUTRAL SWITCH INSPECTION [L3].) • Is neutral switch normal?	Yes	Go to Step 14.
		No	Replace neutral switch, then go to Step 14.
13	**INSPECT NEUTRAL SWITCH SIGNAL CIRCUIT FOR SHORT TO GROUND** • Inspect continuity between neutral switch terminal B (wiring harness-side) and body ground. • Is there continuity?	Yes	Repair or replace harness for short to ground, then go to Step 14.
		No	Go to the next step.
14	**VERIFY TROUBLESHOOTING OF DTC P0850 COMPLETED** • Make sure to reconnect all disconnected connectors. • Start engine. • Clear the DTC from the PCM memory using the WDS or equivalent. • Drive vehicle **above 30 km/h {19 mph}** and stop vehicle. • Depress and release clutch pedal **more than 10 times** during drive cycle. • Is PENDING CODE for this DTC present?	Yes	Replace PCM, then go to the next step. (See 01–40A–9 PCM REMOVAL/INSTALLATION [L3].)
		No	Go to the next step.
15	**VERIFY AFTER REPAIR PROCEDURE** • Perform the "After Repair Procedure". (See 01–02A–12 AFTER REPAIR PROCEDURE [L3].) • Is any DTC present?	Yes	Go to the applicable DTC inspection. (See 01–02A–18 DTC TABLE [L3].)
		No	Troubleshooting completed.

DTC P2004 [L3]

E6U010202000W01

DTC P2004	Variable tumble shutter valve stuck open
DETECTION CONDITION	• PCM monitors mass variable tumble shutter valve position using variable tumble shutter valve switch. If PCM turns the variable tumble solenoid valve on but variable tumble shutter valve position still remain open (variable tumble shutter valve switch off), PCM determines that variable tumble shutter valve has been stuck open. **Diagnostic support note** • This is a continuous monitor (CCM). • MIL illuminates if PCM detects above malfunction condition in two consecutive drive cycles or in one drive cycle while DTC for the same malfunction has been stored in PCM. • PENDING CODE is available if PCM detects the above malfunction condition during first drive cycle. • FREEZE FRAME DATA is available. • DTC is stored in PCM memory.
POSSIBLE CAUSE	• Variable tumble shutter valve actuator malfunction (stuck open) • Misconnected or pulled out vacuum hose • Variable tumble solenoid valve malfunction • Open circuit in wiring between variable tumble solenoid valve terminal B and PCM terminal 2I • Short to power in wiring between variable tumble solenoid valve terminal B and PCM terminal 2I • Open circuit in wiring between variable tumble shutter valve switch terminal C and PCM terminal 2AE • Short to power in wiring between variable tumble shutter valve switch terminal C and PCM terminal 2AE • PCM malfunction

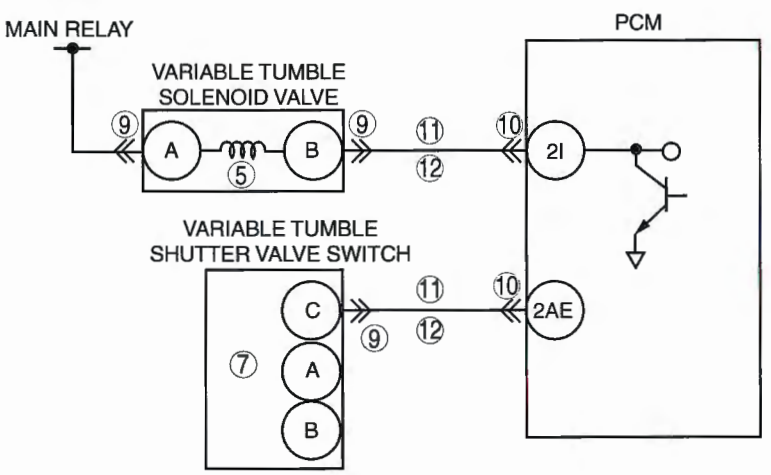

VARIABLE INTAKE AIR SOLENOID VALVE HARNESS SIDE CONNECTOR

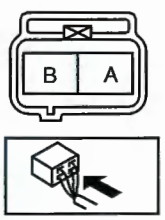

PCM WIRING HARNESS-SIDE CONNECTOR

2BE	2BA	2AW	2AS	2AO	2AK	2AG	2AC	2Y	2U	2Q	2M	2I	2E	2A
2BF	2BB	2AX	2AT	2AP	2AL	2AH	2AD	2Z	2V	2R	2N	2J	2F	2B
2BG	2BC	2AY	2AU	2AQ	2AM	2AI	2AE	2AA	2W	2S	2O	2K	2G	2C
2BH	2BD	2AZ	2AV	2AR	2AN	2AJ	2AF	2AB	2X	2T	2P	2L	2H	2D

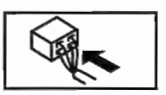

VARIABLE TUMBLE SHUTTER VALVE SWITCH HARNESS SIDE CONNECTOR

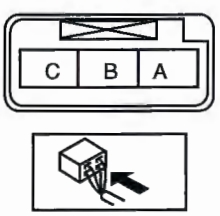

Diagnostic procedure

STEP	INSPECTION		ACTION
1	**VERIFY FREEZE FRAME DATA HAS BEEN RECORDED** • Has FREEZE FRAME DATA been recorded?	Yes	Go to the next step.
		No	Record FREEZE FRAME DATA on repair order, then go to the next step.
2	**VERIFY RELATED REPAIR INFORMATION AVAILABILITY** • Check for related Service Bulletins and/or on-line repair information availability. • Is any related repair information available?	Yes	Perform repair or diagnosis according to the available repair information. • If the vehicle is not repaired, go to the next step.
		No	Go to the next step.
3	**CLASSIFY INTERMITTENT CONCERN OR CONTINUOUS CONCERN** • Clear the DTC from the PCM memory using the WDS or equivalent. • Drive vehicle under following conditions: — Engine coolant temperature is **above 63 °C {145 °F}**. — Engine speed: **below 3,750 rpm** — Throttle opening angle is below as followings • Engine speed **below 1,500 rpm: above 35%** • Engine speed **between 1,500—2,500 rpm: between 25–35%** • Engine speed **above 2,500: below 25%** • Is PENDING CODE for this DTC present?	Yes	Go to the next step.
		No	Intermittent concern exists. Go to INTERMITTENT CONCERN TROUBLESHOOTING procedure. (See 01–03A–7 INTERMITTENT CONCERN TROUBLESHOOTING [L3].)
4	**VERIFY STORED OTHER DTCS** • Verify stored DTCs using the WDS or equivalent. • Is DTC P2088 or P2089 present?	Yes	Go to appropriate DTC troubleshooting procedures.
		No	Go to the next step.
5	**INSPECT VARIABLE TUMBLE SOLENOID VALVE** • Perform "VARIABLE TUMBLE SOLENOID VALVE INSPECTION". (See 01–13A–9 VARIABLE TUMBLE SOLENOID VALVE INSPECTION [L3].) • Is variable tumble solenoid valve normal?	Yes	Go to the next step.
		No	Replace variable tumble control solenoid valve, then go to Step 13.
6	**INSPECT VARIABLE TUMBLE SHUTTER VALVE ACTUATOR** • Perform "VARIABLE TUMBLE SHUTTER VALVE ACTUATOR INSPECTION". (See 01–13A–9 VARIABLE TUMBLE SHUTTER VALVE ACTUATOR INSPECTION [L3].) • Is variable tumble shutter valve actuator normal?	Yes	Go to the next step.
		No	Replace Intake manifold, then go to Step 13.
7	**INSPECT VARIABLE TUMBLE SHUTTER VALVE SWITCH** • Perform "VARIABLE TUMBLE SHUTTER VALVE SWITCH INSPECTION". (See 01–40A–28 VARIABLE TUMBLE SHUTTER VALVE SWITCH INSPECTION [L3].) • Is variable tumble shutter valve switch normal?	Yes	Go to the next step.
		No	Replace intake manifold, then go to Step 13.
8	**VERIFY CONNECTION OF VACUUM HOSE ROUTING** • Verify that the vacuum hoses are connected properly. (See 01–13A–3 VACUUM HOSE ROUTING DIAGRAM [L3].) • Are vacuum hoses connected properly?	Yes	Go to the next step.
		No	Connect the vacuum hoses properly, then go to the next step.

STEP	INSPECTION		ACTION
9	**INSPECT VARIABLE TUMBLE SOLENOID VALVE OR VARIABLE TUMBLE SHUTTER VALVE SWITCH CONNECTOR FOR POOR CONNECTION** • Turn ignition switch to OFF. • Disconnect the variable tumble solenoid valve connector and variable tumble shutter valve switch connector. • Inspect for poor connection (such as damaged/ pulled-out pins, corrosion). • Is there any malfunction?	Yes	Repair or replace the terminal, then go to Step 13.
		No	Go to the next step.
10	**INSPECT PCM CONNECTOR FOR POOR CONNECTION** • Turn ignition switch to OFF. • Disconnect PCM connector. • Inspect for poor connection (such as damaged/ pulled-out pins, corrosion). • Is there any malfunction?	Yes	Repair or replace the terminal, then go to Step 13.
		No	Go to the next step.
11	**INSPECT VARIABLE TUMBLE SOLENOID VALVE OR VARIABLE TUMBLE SHUTTER VALVE SWITCH SIGNAL CIRCUIT FOR OPEN CIRCUIT** • Inspect continuity between the following terminal: — Variable tumble solenoid valve terminal B (wiring harness-side) and PCM terminal 2I (wiring harness-side). — Variable tumble shutter valve switch terminal C (wiring harness-side) and PCM terminal 2AE (wiring harness-side). • Is there continuity?	Yes	Go to the next step.
		No	Repair or replace harness for open circuit, then go to Step 13.
12	**INSPECT VARIABLE TUMBLE SOLENOID VALVE OR VARIABLE TUMBLE SHUTTER VALVE SWITCH CIRCUIT FOR SHORT TO POWER SUPPLY** • Disconnect the variable tumble solenoid valve connector and variable tumble shutter valve switch connector. • Turn ignition switch to ON (Engine off). • Measure voltage between the following terminal and body ground. — PCM terminal 2I (wiring harness-side). — PCM terminal 2AE (wiring harness-side). • Is voltage **B+**?	Yes	Repair or replace harness for short to power supply, then go to the next step.
		No	Go to the next step.
13	**VERIFY TROUBLESHOOTING OF DTC P2004 COMPLETED** • Make sure to reconnect all disconnected connectors. • Start engine. • Clear the DTC from the PCM memory using the WDS or equivalent. • Start engine. • Drive vehicle under following conditions: — Engine coolant temperature is **above 63 °C {145 °F}**. — Engine speed: **below 3,750 rpm** — Throttle opening angle is below as followings • Engine speed **below 1,500 rpm: above 35%** • Engine speed **between 1,500—2,500 rpm: between 25–35 %** • Engine speed **above 2,500: below 25 %** • Is PENDING CODE for this DTC present?	Yes	Replace PCM, then go to the next step. (See 01–40A–9 PCM REMOVAL/INSTALLATION [L3].)
		No	Go to the next step.
14	**VERIFY AFTER REPAIR PROCEDURE** • Perform the "After Repair Procedure". (See 01–02A–12 AFTER REPAIR PROCEDURE [L3].) • Is any DTC present?	Yes	Go to the applicable DTC inspection. (See 01–02A–18 DTC TABLE [L3].)
		No	Troubleshooting completed.

DTC P2006 [L3]

E6U010202000W02

DTC P2006	Variable tumble shutter valve stuck closed
DETECTION CONDITION	• PCM monitors mass variable tumble shutter valve position using variable tumble shutter valve switch. If variable tumble turns variable tumble solenoid valve off but variable tumble shutter valve position still remain close (variable tumble shutter valve position sensor on), PCM determines that variable tumble shutter valve has been stuck closed. **Diagnostic support note** • This is a continuous monitor (CCM). • MIL illuminates if PCM detects above malfunction condition in two consecutive drive cycles or in one drive cycle while DTC for the same malfunction has been stored in PCM. • PENDING CODE is available if PCM detects the above malfunction condition during first drive cycle. • FREEZE FRAME DATA is available. • DTC is stored in PCM memory.
POSSIBLE CAUSE	• ECT sensor malfunction • TP sensor malfunction • CKP sensor malfunction • Variable tumble solenoid valve malfunction • Variable tumble shutter valve malfunction (stuck closed) • Variable tumble shutter valve actuator malfunction (stuck closed). • Short to ground circuit between variable tumble control solenoid valve terminal B and PCM terminal 2I • Short to ground in wiring between variable tumble shutter valve switch terminal C and PCM terminal 2AE • PCM malfunction

Diagnostic procedure

STEP	INSPECTION		ACTION
1	**VERIFY FREEZE FRAME DATA HAS BEEN RECORDED** • Has FREEZE FRAME DATA been recorded?	Yes	Go to the next step.
		No	Record FREEZE FRAME DATA on repair order, then go to the next step.
2	**VERIFY RELATED REPAIR INFORMATION AVAILABILITY** • Check for related Service Bulletins and/or on-line repair information availability. • Is any related repair information available?	Yes	Perform repair or diagnosis according to the available repair information. • If the vehicle is not repaired, go to the next step.
		No	Go to the next step.
3	**CLASSIFY INTERMITTENT CONCERN OR CONTINUOUS CONCERN** • Clear the DTC from the PCM memory using the WDS or equivalent. • Drive vehicle under following conditions: — Engine coolant temperature is **above 63 °C {145 °F}**. — Engine speed: **below 3,750 rpm** — Throttle opening angle is below as followings • Engine speed **below 1,500 rpm: above 35%** • Engine speed **between 1,500—2,500 rpm: between 25–35%** • Engine speed **above 2,500: below 25%** • Is PENDING CODE for this DTC present?	Yes	Go to the next step.
		No	Intermittent concern exists. Go to INTERMITTENT CONCERN TROUBLESHOOTING procedure. (See 01–03A–7 INTERMITTENT CONCERN TROUBLESHOOTING [L3].)
4	**VERIFY STORED OTHER DTCS** • Verify stored DTCs using WDS or equipment. • Is other DTC present except P0117, P0118, P0122, P0123 and/or P0335?	Yes	Go to appropriate DTC troubleshooting procedures.
		No	Go to the next step.
5	**INSPECT VARIABLE TUMBLE SHUTTER VALVE ACTUATOR** • Perform "Variable Tumble System Operation Inspection". (See 01–03A–67 Variable Tumble System Operation Inspection.) • Is variable tumble shutter valve actuator normal?	Yes	Go to the next step.
		No	Replace variable tumble shutter valve actuator, then go to Step 10.

STEP	INSPECTION		ACTION
6	**INSPECT VARIABLE TUMBLE SOLENOID VALVE** • Perform "variable tumble solenoid valve airflow inspection". (See 01–13A–9 VARIABLE TUMBLE SOLENOID VALVE INSPECTION [L3].) • Is variable tumble solenoid valve normal?	Yes	Go to the next step.
		No	Replace variable tumble solenoid valve, then go to Step 10.
7	**INSPECT VARIABLE TUMBLE SOLENOID VALVE OR VARIABLE TUMBLE SHUTTER VALVE SWITCH CONNECTOR FOR POOR CONNECTION** • Turn ignition switch to OFF. • Disconnect the variable tumble solenoid valve connector and variable tumble shutter valve switch connector. • Inspect for poor connection (such as damaged/ pulled-out pins, corrosion). • Is there any malfunction?	Yes	Repair terminal, then go to Step 10.
		No	Go to the next step.
8	**INSPECT PCM CONNECTOR FOR POOR CONNECTION** • Inspect for poor connection at PCM terminals (such as damaged, pulled-out terminals, corrosion). • Is there any malfunction?	Yes	Repair terminal, then go to Step 10.
		No	Go to the next step.
9	**INSPECT VARIABLE TUMBLE SOLENOID VALVE OR VARIABLE TUMBLE SHUTTER VALVE SWITCH SIGNAL CIRCUIT FOR SHORT TO GROUND** • Inspect continuity between the following terminal and body ground. — PCM terminal 2I (wiring harness-side). — PCM terminal 2AE (wiring harness-side). • Is there continuity?	Yes	Repair or replace harness for short to ground, then go to the next step.
		No	Go to the next step.
10	**VERIFY TROUBLESHOOTING OF DTC P2006 COMPLETED** • Make sure to reconnect all disconnected connectors. • Start engine. • Clear the DTC from the PCM memory using the WDS or equivalent. • Start engine. • Drive vehicle under following conditions: — Engine coolant temperature is **above 63 °C {145 °F}**. — Engine speed: **below 3,750 rpm** — Throttle opening angle is below as followings • Engine speed **below 1,500 rpm**: **above 35%** • Engine speed **between 1,500—2,500 rpm**: **between 25–35%** • Engine speed **above 2,500**: **below 25%** • Is PENDING CODE for this DTC present?	Yes	Replace PCM, then go to the next step. (See 01–40A–9 PCM REMOVAL/INSTALLATION [L3].)
		No	Go to the next step.
11	**VERIFY AFTER REPAIR PROCEDURE** • Perform the "After Repair Procedure". (See 01–02A–12 AFTER REPAIR PROCEDURE [L3].) • Is any DTC present?	Yes	Go to the applicable DTC inspection. (See 01–02A–18 DTC TABLE [L3].)
		No	Troubleshooting completed.

DTC P2009 [L3]

E6U010202000W09

DTC P2009	Variable tumble solenoid valve circuit low input
DETECTION CONDITION	• The PCM monitors variable tumble solenoid valve control signal. If the PCM turns variable tumble solenoid valve off but voltage still remains low, the PCM determines that variable tumble solenoid valve circuit has malfunction. **Diagnostic support note** • This is a continuous monitor (CCM). • The MIL illuminates if the PCM detects the above malfunction condition in two consecutive drive cycles or in one drive cycle while the DTC for the same malfunction has been stored in the PCM. • PENDING CODE is available if the PCM detects the above malfunction condition during first drive cycle. • FREEZE FRAME DATA is available. • Are any DTCs is stored in the PCM memory.
POSSIBLE CAUSE	• Poor connection of connectors at PCM and/or variable tumble solenoid valve • Short to ground in wiring harness between variable tumble solenoid valve terminal B and PCM terminal 2I • Open circuit in wiring harness between main relay and variable tumble solenoid valve terminal A • Open circuit in wiring harness between variable tumble solenoid valve terminal B and PCM terminal 2I • Variable tumble solenoid valve malfunction • PCM malfunction

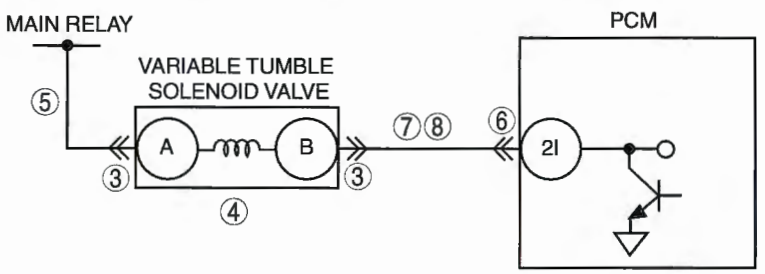

VARIABLE TUMBLE SOLENOID VALVE WIRING HARNESS-SIDE CONNECTOR

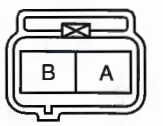

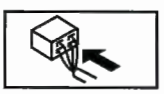

PCM WIRING HARNESS-SIDE CONNECTOR

2BE	2BA	2AW	2AS	2AO	2AK	2AG	2AC	2Y	2U	2Q	2M	2I	2E	2A
2BF	2BB	2AX	2AT	2AP	2AL	2AH	2AD	2Z	2V	2R	2N	2J	2F	2B
2BG	2BC	2AY	2AU	2AQ	2AM	2AI	2AE	2AA	2W	2S	2O	2K	2G	2C
2BH	2BD	2AZ	2AV	2AR	2AN	2AJ	2AF	2AB	2X	2T	2P	2L	2H	2D

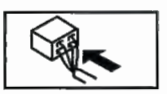

Diagnostic procedure

STEP	INSPECTION		ACTION
1	**VERIFY FREEZE FRAME DATA AND DIAGNOSTIC MONITORING TEST RESULTS HAS BEEN RECORDED** • Has FREEZE FRAME DATA been recorded?	Yes	Go to the next step.
		No	Record the FREEZE FRAME on the repair order, then go to the next step.
2	**VERIFY RELATED REPAIR INFORMATION AVAILABILITY** • Check for related Service Bulletins and/or on-line repair information availability. • Is any related repair information available?	Yes	Perform repair or diagnosis according to the available repair information. • If the vehicle is not repaired, go to the next step.
		No	Go to the next step.
3	**INSPECT VARIABLE TUMBLE SOLENOID VALVE CONNECTOR FOR POOR CONNECTION** • Turn the ignition switch off. • Inspect for poor connection (such as damaged/pulled-out pins, corrosion). • Is there any malfunction?	Yes	Repair or replace the terminal, then go to Step 9.
		No	Go to the next step.
4	**INSPECT VARIABLE TUMBLE SOLENOID VALVE** • Perform the variable tumble solenoid valve inspection. (See 01–13A–9 VARIABLE TUMBLE SOLENOID VALVE INSPECTION [L3].) • Is variable tumble solenoid valve normal?	Yes	Go to the next step.
		No	Replace the variable tumble solenoid valve, then go to Step 9.
5	**INSPECT VARIABLE TUMBLE SOLENOID VALVE POWER SUPPLY CIRCUIT FOR OPEN CIRCUIT** • Disconnect the variable tumble solenoid valve connector. • Turn the ignition switch to the ON position (Engine off). • Measure the voltage between variable tumble solenoid valve terminal A (wiring harness-side) and body ground. • Is the voltage **B+**?	Yes	Go to the next step.
		No	Repair or replace the wiring harness for an open circuit, then go to Step 9.
6	**INSPECT PCM CONNECTOR FOR POOR CONNECTION** • Turn the ignition switch off. • Disconnect the PCM connector. • Inspect for poor connection at PCM terminal 2I. (such as damaged/pulled-out pins, corrosion). • Is there any malfunction?	Yes	Repair the terminal, then go to Step 9.
		No	Go to the next step.
7	**INSPECT VARIABLE TUMBLE SOLENOID VALVE CONTROL CIRCUIT FOR SHORT TO GROUND** • Inspect for continuity between variable tumble solenoid valve terminal B (wiring harness-side) and body ground. • Is there continuity?	Yes	Repair or replace the wiring harness for short to ground, then go to Step 9.
		No	Go to the next step.
8	**INSPECT VARIABLE TUMBLE SOLENOID VALVE CONTROL CIRCUIT FOR OPEN CIRCUIT** • Inspect for continuity between variable tumble solenoid valve terminal B (wiring harness-side) and PCM terminal 2I (wiring harness-side). • Is there continuity?	Yes	Go to the next step.
		No	Repair or replace the wiring harness for an open circuit, then go to the next step.
9	**VERIFY TROUBLESHOOTING OF DTC P2009 COMPLETED** • Make sure to reconnect all disconnected connectors. • Clear the DTC from the PCM memory using the WDS or equivalent. • Start the engine. • Is the PENDING CODE for this DTC present?	Yes	Replace the PCM, then go to the next step. (See 01–40A–9 PCM REMOVAL/INSTALLATION [L3].)
		No	Go to the next step.
10	**VERIFY AFTER REPAIR PROCEDURE** • Perform the "AFTER REPAIR PROCEDURE". (See 01–02A–12 AFTER REPAIR PROCEDURE [L3].) • Is any DTC present?	Yes	Go to the applicable DTC inspection. (See 01–02A–18 DTC TABLE [L3].)
		No	Troubleshooting completed.

DTC P2010 [L3]

E6U010202000W10

DTC P2010	Variable tumble solenoid valve circuit high input
DETECTION CONDITION	• The PCM monitors the variable tumble solenoid valve control signal. If the PCM turns variable tumble solenoid valve on but the voltage still remains high, the PCM determines that the variable tumble solenoi valve circuit has a malfunction. **Diagnostic support note** • This is a continuous monitor (CCM). • The MIL illuminates if the PCM detects the above malfunction condition in two consecutive drive cycles or in one drive cycle while the DTC for the same malfunction has been stored in the PCM. • PENDING CODE is available if the PCM detects the above malfunction condition during first drive cycle. • FREEZE FRAME DATA is available. • Are any DTCs is stored in the PCM memory.
POSSIBLE CAUSE	• Poor connection of connectors at PCM and/or variable tumble solenoid valve • Short to power supply in wiring harness between variable tumble solenoid valve terminal B and PCM terminal 2I • Variable tumble solenoid valve malfunction • PCM malfunction

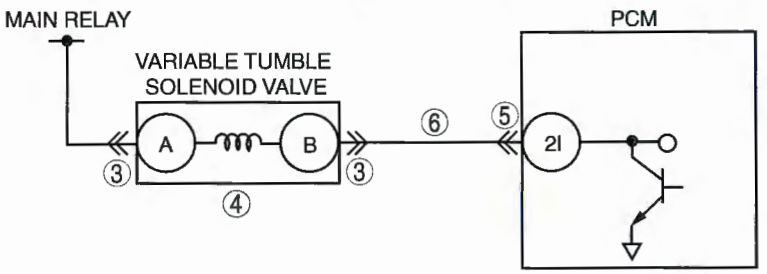

VARIABLE TUMBLE SOLENOID VALVE WIRING HARNESS-SIDE CONNECTOR

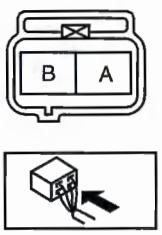

PCM WIRING HARNESS-SIDE CONNECTOR

2BE	2BA	2AW	2AS	2AO	2AK	2AG	2AC	2Y	2U	2Q	2M	2I	2E	2A
2BF	2BB	2AX	2AT	2AP	2AL	2AH	2AD	2Z	2V	2R	2N	2J	2F	2B
2BG	2BC	2AY	2AU	2AQ	2AM	2AI	2AE	2AA	2W	2S	2O	2K	2G	2C
2BH	2BD	2AZ	2AV	2AR	2AN	2AJ	2AF	2AB	2X	2T	2P	2L	2H	2D

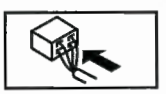

Diagnostic procedure

STEP	INSPECTION		ACTION
1	**VERIFY FREEZE FRAME DATA AND DIAGNOSTIC MONITORING TEST RESULTS HAS BEEN RECORDED** • Has FREEZE FRAME DATA been recorded?	Yes	Go to the next step.
		No	Record the FREEZE FRAME on the repair order, then go to the next step.
2	**VERIFY RELATED REPAIR INFORMATION AVAILABILITY** • Check for related Service Bulletins and/or on-line repair information availability. • Is any related repair information available?	Yes	Perform repair or diagnosis according to the available repair information. • If the vehicle is not repaired, go to the next step.
		No	Go to the next step.
3	**INSPECT VARIABLE TUMBLE SOLENOID VALVE CONNECTOR FOR POOR CONNECTION** • Turn the ignition switch off. • Inspect for poor connection (such as damaged/pulled-out pins, corrosion). • Is there any malfunction?	Yes	Repair or replace the terminal, then go to Step 7.
		No	Go to the next step.
4	**INSPECT VARIABLE TUMBLE SOLENOID VALVE** • Inspect the variable tumble solenoid valve. (See 01–13A–9 VARIABLE TUMBLE SOLENOID VALVE INSPECTION [L3].) • Is the variable tumble solenoid valve normal?	Yes	Go to the next step.
		No	Replace the variable tumble solenoid valve, then go to Step 7.
5	**INSPECT PCM CONNECTOR FOR POOR CONNECTION** • Turn the ignition switch off. • Disconnect the PCM connector. • Inspect for poor connection at PCM terminal 2I. (such as damaged/pulled-out pins, corrosion). • Is there any malfunction?	Yes	Repair the terminal, then go to Step 7.
		No	Go to the next step.
6	**INSPECT VARIABLE TUMBLE SOLENOID VALVE CONTROL CIRCUIT FOR SHORT TO POWER SUPPLY** • Remove the variable tumble solenoid valve. • Turn the ignition switch to the ON position (Engine off). • Measure the voltage between PCM terminal 2I and body ground. • Is the voltage **B+**?	Yes	Repair or replace the wiring harness with short to power supply, then go to the next step.
		No	Go to the next step.
7	**VERIFY TROUBLESHOOTING OF DTC P2010 COMPLETED** • Make sure to reconnect all disconnected connectors. • Clear the DTC from the PCM memory using the WDS or equivalent. • Start the engine. • Is the PENDING CODE for this DTC present?	Yes	Replace the PCM, then go to the next step. (See 01–40A–9 PCM REMOVAL/INSTALLATION [L3].)
		No	Go to the next step.
8	**VERIFY AFTER REPAIR PROCEDURE** • Perform the "AFTER REPAIR PROCEDURE". (See 01–02A–12 AFTER REPAIR PROCEDURE [L3].) • Is any DTC present?	Yes	Go to the applicable DTC inspection. (See 01–02A–18 DTC TABLE [L3].)
		No	Troubleshooting completed.

DTC P2088 [L3]

E6U010202000W11

DTC P2088	Oil control valve (OCV) circuit low
DETECTION CONDITION	• The PCM monitors the OCV voltage. If the PCM detects the OCV control voltage (calculated from the OCV' is below the threshold voltage (calculated from the battery positive voltage), the PCM determines that the OCV circuit has a malfunction. **Diagnostic support note** • This is a continuous monitor (CCM). • The MIL illuminates if the PCM detects the above malfunction condition during the first drive cycle. • PENDING CODE is available if the PCM detects the above malfunction condition. • FREEZE FRAME DATA is available. • DTC is stored in the PCM memory.
POSSIBLE CAUSE	• Poor connection at the PCM or OCV connector • Short to ground in wiring between OCV terminal A and PCM terminal 2E • Open circuit in wiring between the main relay and OCV terminal B • Open circuit in wiring between OCV terminal A and PCM terminal 2E • OCV malfunction • PCM malfunction

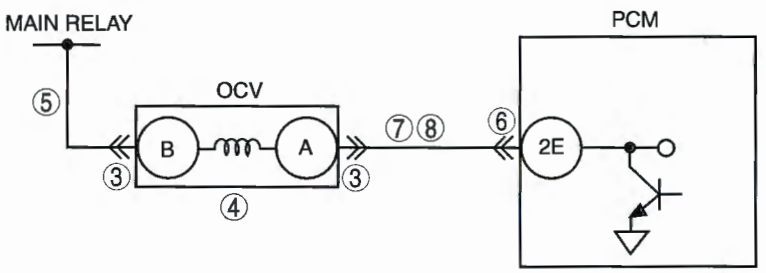

OCV
HARNESS SIDE CONNECTOR

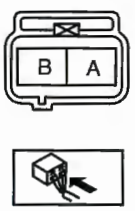

PCM
HARNESS SIDE CONNECTOR

2BE	2BA	2AW	2AS	2AO	2AK	2AG	2AC	2Y	2U	2Q	2M	2I	2E	2A
2BF	2BB	2AX	2AT	2AP	2AL	2AH	2AD	2Z	2V	2R	2N	2J	2F	2B
2BG	2BC	2AY	2AU	2AQ	2AM	2AI	2AE	2AA	2W	2S	2O	2K	2G	2C
2BH	2BD	2AZ	2AV	2AR	2AN	2AJ	2AF	2AB	2X	2T	2P	2L	2H	2D

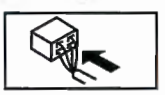

Diagnostic procedure

STEP	INSPECTION		ACTION
1	**VERIFY FREEZE FRAME DATA AND DIAGNOSTIC MONITORING TEST RESULTS HAS BEEN RECORDED** • Has FREEZE FRAME DATA been recorded?	Yes	Go to the next step.
		No	Record the FREEZE FRAME on the repair order, then go to the next step.
2	**VERIFY RELATED REPAIR INFORMATION AVAILABILITY** • Check for related Service Bulletins and/or on-line repair information availability. • Is any related repair information available?	Yes	Perform repair or diagnosis according to the available repair information. • If the vehicle is not repaired, go to the next step.
		No	Go to the next step.
3	**INSPECT OCV CONNECTOR FOR POOR CONNECTION** • Turn the ignition switch off. • Inspect for poor connection (such as damaged/ pulled-out pins, corrosion). • Is there any malfunction?	Yes	Repair or replace the terminal, then go to Step 9.
		No	Go to the next step.
4	**INSPECT OCV** • Inspect the OCV. (See 01–10A–32 OIL CONTROL VALVE (OCV) INSPECTION [L3].) • Is the OCV normal?	Yes	Go to the next step.
		No	Replace the OCV, then go to Step 9.
5	**INSPECT OCV POWER SUPPLY CIRCUIT FOR OPEN CIRCUIT** • Disconnect the OCV connector. • Turn the ignition switch to the ON position (Engine off). • Measure the voltage between variable tumble control solenoid valve terminal B (wiring harness-side) and body ground. • Is the voltage **B+**?	Yes	Go to the next step.
		No	Repair or replace the wiring harness for an open circuit, then go to Step 9.
6	**INSPECT PCM CONNECTOR FOR POOR CONNECTION** • Turn the ignition switch off. • Disconnect the PCM connector. • Inspect for poor connection at PCM terminal 2E (such as damaged, pulled-out pins, corrosion). • Is there any malfunction?	Yes	Repair the terminal, then go to Step 9.
		No	Go to the next step.
7	**INSPECT OCV CONTROL CIRCUIT FOR SHORT TO GROUND** • Inspect for continuity between OCV terminal A (wiring harness-side) and body ground. • Is there continuity?	Yes	Repair or replace the wiring harness for short to ground, then go to Step 9.
		No	Go to the next step.
8	**INSPECT OCV CONTROL CIRCUIT FOR OPEN CIRCUIT** • Connect the OCV connector. • Turn the ignition switch to the ON position (Engine off). • Inspect for continuity between OCV terminal A (wiring harness-side) and PCM terminal 2E (wiring harness-side). • Is there continuity?	Yes	Go to the next step.
		No	Repair or replace the wiring harness for an open or short circuit to ground, then go to the next step.
9	**VERIFY TROUBLESHOOTING OF DTC P2088 COMPLETED** • Make sure to reconnect all disconnected connectors. • Clear the DTC from the PCM memory using the WDS or equivalent. • Turn the ignition switch off. • Start the engine and warm it up completely. • Is the same DTC present?	Yes	Replace the PCM, then go to the next step. (See 01–40A–9 PCM REMOVAL/INSTALLATION [L3].)
		No	Go to the next step.
10	**VERIFY AFTER REPAIR PROCEDURE** • Perform the "AFTER REPAIR PROCEDURE". (See 01–02A–12 AFTER REPAIR PROCEDURE [L3].) • Are any DTCs present?	Yes	Go to the applicable DTC inspection. (See 01–02A–18 DTC TABLE [L3].)
		No	Troubleshooting completed.

DTC P2089 [L3]

E6U010202000W12

DTC P2089	Oil control valve (OCV) circuit high
DETECTION CONDITION	• The PCM monitors the OCV voltage. If the PCM detects that the OCV control voltage (calculated from the OCV) is above the threshold voltage (calculated from battery positive voltage), the PCM determines that the OCV circuit has a malfunction. **Diagnostic support note** • This is a continuous monitor (CCM). • The MIL illuminates if the PCM detects the above malfunction condition during the first drive cycle. • PENDING CODE is available if the PCM detects the above malfunction condition. • FREEZE FRAME DATA is available. • Are any DTCs is stored in the PCM memory.
POSSIBLE CAUSE	• Poor connection at the PCM or OCV connector • Short to power circuit in wiring between OCV terminal A and PCM terminal 2E • OCV malfunction • PCM malfunction

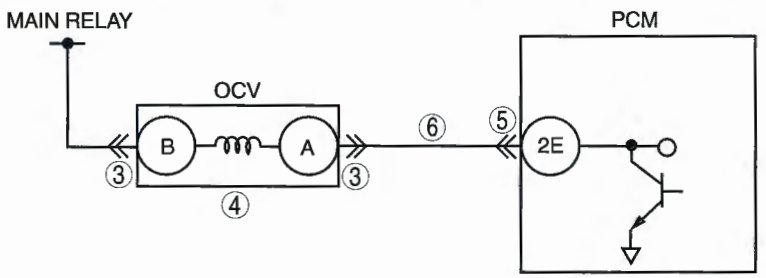

OCV
HARNESS SIDE CONNECTOR

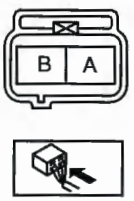

PCM
WIRING HARNESS SIDE CONNECTOR

2BE	2BA	2AW	2AS	2AO	2AK	2AG	2AC	2Y	2U	2Q	2M	2I	2E	2A
2BF	2BB	2AX	2AT	2AP	2AL	2AH	2AD	2Z	2V	2R	2N	2J	2F	2B
2BG	2BC	2AY	2AU	2AQ	2AM	2AI	2AE	2AA	2W	2S	2O	2K	2G	2C
2BH	2BD	2AZ	2AV	2AR	2AN	2AJ	2AF	2AB	2X	2T	2P	2L	2H	2D

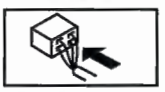

Diagnostic procedure

STEP	INSPECTION		ACTION
1	**VERIFY FREEZE FRAME DATA AND DIAGNOSTIC MONITORING TEST RESULTS HAS BEEN RECORDED** • Has FREEZE FRAME DATA been recorded?	Yes	Go to the next step.
		No	Record the FREEZE FRAME on the repair order, then go to the next step.
2	**VERIFY RELATED REPAIR INFORMATION AVAILABILITY** • Check for related Service Bulletins and/or on-line repair information availability. • Is any related repair information available?	Yes	Perform repair or diagnosis according to the available repair information. • If the vehicle is not repaired, go to the next step.
		No	Go to the next step.
3	**INSPECT OCV CONNECTOR FOR POOR CONNECTION** • Turn the ignition switch off. • Inspect for poor connection (such as damaged/ pulled-out pins, corrosion). • Is there any malfunction?	Yes	Repair or replace the terminal, then go to Step 7.
		No	Go to the next step.
4	**INSPECT OCV** • Inspect the OCV. (See 01–10A–32 OIL CONTROL VALVE (OCV) INSPECTION [L3].) • Is the OCV normal?	Yes	Go to the next step.
		No	Replace the OCV, then go to Step 7.
5	**INSPECT PCM CONNECTOR FOR POOR CONNECTION** • Turn the ignition switch off. • Disconnect the PCM connector. • Inspect for poor connection at PCM terminal 2E (such as damaged, pulled-out pins, corrosion). • Is there malfunction?	Yes	Repair the terminal, then go to Step 7.
		No	Go to the next step.
6	**INSPECT OCV CONTROL CIRCUIT FOR SHORT TO POWER** • Remove the OCV. • Turn the ignition switch to the ON position (Engine off). • Measure the voltage between PCM terminal 2E and body ground. • Is the voltage **B+**?	Yes	Repair or replace the wiring harness for short to power supply, then go to the next step.
		No	Go to the next step.
7	**VERIFY TROUBLESHOOTING OF DTC P2089 COMPLETED** • Make sure to reconnect all disconnected connectors. • Clear the DTC from the PCM memory using the WDS or equivalent. • Turn the ignition switch off. • Start the engine and warm it up completely. • Is the same DTC present?	Yes	Replace the PCM, then go to the next step. (See 01–40A–9 PCM REMOVAL/INSTALLATION [L3].)
		No	Go to the next step.
8	**VERIFY AFTER REPAIR PROCEDURE** • Perform the "AFTER REPAIR PROCEDURE". (See 01–02A–12 AFTER REPAIR PROCEDURE [L3].) • Are any DTCs present?	Yes	Go to the applicable DTC inspection. (See 01–02A–18 DTC TABLE [L3].)
		No	Troubleshooting completed.

DTC P2096 [L3]

E6U010202000W16

DTC P2096	Target A/F feedback system too lean
DETECTION CONDITION	• The PCM monitors the target A/F fuel trim when under the target A/F feedback control. If the fuel trim is less*1/more*2 than the specification, the PCM determines that the target A/F feedback system is too lean. **MONITORING CONDITION*2** — Rear HO2S voltage is **above 0.1 V** **Diagnostic support note** • This is a continuous monitor (Fuel system). • MIL illuminates if PCM detects above malfunction condition in two consecutive drive cycles or in one drive cycle while DTC for the same malfunction has been stored in PCM. • PENDING CODE is available if PCM detects the above malfunction condition during first drive cycle. • FREEZE FRAME DATA is available. • The DTC is stored in the PCM memory.
POSSIBLE CAUSE	• Leakage exhaust gas • Middle*1/Rear*2 HO2S malfunction • IAT sensor malfunction • ECT sensor malfunction • Air suction in intake-air system • Front HO2S malfunction • MAF sensor malfunction • Insufficient fuel line pressure • Fuel pump unit malfunction • Leakage fuel • Improper operation ignition system • Insufficient engine compression • Fuel injector malfunction • PCM malfunction

*1 : California emission regulation applicable ATX model
*2 : Except for California emission regulation applicable ATX model

Diagnostic procedure

STEP	INSPECTION		ACTION
1	**VERIFY FREEZE FRAME DATA AND DIAGNOSTIC MONITORING TEST RESULTS HAVE BEEN RECORDED** • Have FREEZE FRAME DATA and DIAGNOSTIC MONITORING TEST RESULTS (Fuel system related) been recorded?	Yes	Go to the next step.
		No	Record the FREEZE FRAME DATA and DIAGNOSTIC MONITORING TEST RESULTS on the repair order, then go to the next step.
2	**VERIFY RELATED REPAIR INFORMATION AVAILABILITY** • Check for related Service Bulletins and/or on-line repair information availability. • Is any related repair information available?	Yes	Perform repair or diagnosis according to the available repair information. • If the vehicle is not repaired, go to the next step.
		No	Go to the next step.
3	**VERIFY RELATED PENDING CODE OR STORED DTC** • Turn the ignition switch off then to the ON position (Engine off). • Verify the related PENDING CODE or stored DTCs. • Is the DTC P2177 or P2187 also present?	Yes	Go to the applicable DTC inspection. (See 01–02A–18 DTC TABLE [L3].)
		No	Go to the next step.
4	**IDENTIFY TRIGGER DTC FOR FREEZE FRAME DATA** • Is DTC P2096 on FREEZE FRAME DATA?	Yes	Go to the next step.
		No	Go to FREEZE FRAME DATA DTC inspection. (See 01–02A–18 DTC TABLE [L3].)

STEP	INSPECTION		ACTION
5	**VERIFY CURRENT INPUT SIGNAL STATUS OF MIDDLE*1/REAR*2 HO2S** • Connect the WDS or equivalent to the DLC-2. • Start the engine and warm it up completely. • Access O2S12 PID. • Read O2S12 PID under the following accelerator pedal condition (in NEUTRAL). — **More than 0.45 V** when accelerator pedal is suddenly depressed (rich condition). — **Less than 0.45 V** just after release of accelerator pedal (lean condition) • Is the PID normal?	Yes	Go to the next step.
		No	Visually inspect for the exhaust gas leakage between the TWC and middle*1/rear*2 HO2S. • If there is no leakage, replace the rear HO2S. (See 01–15A–2 EXHAUST SYSTEM REMOVAL/ INSTALLATION [L3].) Then go to Step 17.
6	**VERIFY CURRENT INPUT SIGNAL STATUS** • Connect the WDS or equivalent to the DLC-2. • Verify the following PIDs. (See 01–40A–9 PCM INSPECTION [L3].) — ECT — MAF — TP — VSS • Are the PIDs normal?	Yes	Go to the next step.
		No	Inspect the malfunctioning part according to the inspection results. Then go to Step 17.
7	**VERIFY CURRENT INPUT SIGNAL STATUS UNDER FREEZE FRAME DATA CONDITION** • Connect the WDS or equivalent to the DLC-2. • Verify the following PIDs under the FREEZE FRAME DATA condition. (See 01–40A–9 PCM INSPECTION [L3].) — ECT — MAF — TP — VSS • Are the PIDs normal?	Yes	Go to the next step.
		No	Inspect the malfunctioning part according to the inspection results. Then go to Step 17.
8	**VERIFY CURRENT INPUT SIGNAL STATUS OF FRONT HO2S** • Connect the WDS or equivalent to the DLC-2. • Start the engine and warm it up completely. • Access O2S11 PID. • Read O2S11 PID under following accelerator pedal condition (in NEUTRAL). **Except for California emission regulation applicable ATX model:** — **–1.0—1.0 A** when idle. — **More than 0.25 mA** just after release of accelerator pedal (lean condition). **California emission regulation applicable ATX model:** — **Less than 1 mA** when accelerator pedal is suddenly depressed (rich condition). — **More than 1 mA** just after release of accelerator pedal (lean condition). • Is the PID normal?	Yes	Go to the next step.
		No	Visually inspect for the exhaust gas leakage between the exhaust manifold and front HO2S. • If there is no leakage, replace front HO2S. (See 01–15A–2 EXHAUST SYSTEM REMOVAL/ INSTALLATION [L3].) Then go to Step 17.
9	**VERIFY CURRENT INPUT SIGNAL STATUS OF MAF SENSOR** • Connect the WDS or equivalent to the DLC-2. • Start the engine. • Access the MAF PID. • Verify that the MAF PID changes quickly according to engine speed. • Is the PID normal?	Yes	Go to the next step.
		No	Replace the MAF/IAT sensor, then go to Step 17.
10	**INSPECT INTAKE AIR SYSTEM FOR EXCESSIVE AIR SUCTION** • Visually inspect the hose in intake-air system for looseness, cracks or damages. • Is there any malfunction?	Yes	Repair or replace the malfunctioning part, then go to Step 17.
		No	Go to the next step.

STEP	INSPECTION		ACTION
11	**INSPECT FUEL LINE PRESSURE** • Perform the "FUEL LINE PRESSURE INSPECTION". (See 01–14A–7 FUEL LINE PRESSURE INSPECTION [L3, AJ].) • Is there any malfunction?	Yes	Go to the next step.
		No	Go to Step 13.
12	**INSPECT FUEL SYSTEM FOR FUEL LEAKAGE** • Visually inspect fuel leakage in the fuel system. • Is there fuel leakage?	Yes	Repair or replace the malfunctioning part, then go to Step 17.
		No	Replace the fuel pump unit, then go to Step 17. (See 01–14A–13 FUEL PUMP UNIT REMOVAL/ INSTALLATION [L3, AJ].)
13	**INSPECT IGNITION COIL WIRING HARNESSES** • Inspect the ignition coil related wiring harness condition (intermittent open or short circuit) for all cylinders. • Are wiring harness conditions normal?	Yes	Go to the next step.
		No	Repair the wiring harnesses, then go to Step 17.
14	**INSPECT IGNITION SYSTEM OPERATION** • Perform spark test. (See 01–03A–69 Spark Test.) • Is strong blue spark visible at each cylinder?	Yes	Go to the next step.
		No	Repair or replace the malfunctioning part according to spark test result. Then go to Step 17.
15	**INSPECT ENGINE COMPRESSION** • Inspect the engine compression. (See 01–10A–4 COMPRESSION INSPECTION [L3].) • Is there any malfunction?	Yes	Go to the next step.
		No	Overhaul the engine, then go to Step 17.
16	**INSPECT FUEL INJECTOR** • Inspect the fuel injector. (See 01–14A–29 FUEL INJECTOR INSPECTION [L3].) • Is there any malfunction?	Yes	Replace the fuel injector, then go to the next step. (See 01–14A–24 FUEL INJECTOR REMOVAL/ INSTALLATION [L3].)
		No	Go to the next step.
17	**VERIFY TROUBLESHOOTING OF DTC P2096 COMPLETED** • Make sure to reconnect all disconnected connectors. • Clear the DTC from the PCM memory using the WDS or equivalent. • Perform the PCM Adaptive Memory Produce Drive Mode. (See 01–02A–13 OBD-II DRIVE MODE [L3].) • Is the PENDING CODE for this DTC present?	Yes	Replace the PCM, then go to the next step. (See 01–40A–9 PCM REMOVAL/INSTALLATION [L3].)
		No	Go to the next step.
18	**VERIFY AFTER REPAIR PROCEDURE** • Perform the "AFTER REPAIR PROCEDURE". (See 01–02A–12 AFTER REPAIR PROCEDURE [L3].) • Is any DTC present?	Yes	Go to the applicable DTC inspection. (See 01–02A–18 DTC TABLE [L3].)
		No	Troubleshooting completed.

*1 : California emission regulation applicable ATX model
*2 : Except for California emission regulation applicable ATX model

DTC P2097 [L3]

E6U010202000W17

DTC P2097	Target A/F feedback system too rich
DETECTION CONDITION	• The PCM monitors the target A/F fuel trim when under the target A/F feedback control. If the fuel trim is more*1/less*2 than specification, the PCM determines that the target A/F feedback system is too rich. **Diagnostic support note** • This is a continuous monitor. (Fuel system) • MIL illuminates if PCM detects above malfunction condition in two consecutive drive cycles or in one drive cycle while DTC for the same malfunction has been stored in PCM. • PENDING CODE is available if PCM detects the above malfunction condition during first drive cycle. • FREEZE FRAME DATA is available. • The DTC is stored in the PCM memory.
POSSIBLE CAUSE	• Leakage exhaust gas • Middle*1/Rear*2 HO2S malfunction • IAT sensor malfunction • ECT sensor malfunction • Front HO2S malfunction • Excessive fuel line pressure • Fuel pump unit malfunction • Purge valve malfunction • Insufficient engine compression • PCM malfunction

*1 : California emission regulation applicable ATX model
*2 : Except for California emission regulation applicable ATX model

Diagnostic procedure

STEP	INSPECTION		ACTION
1	**VERIFY FREEZE FRAME DATA AND DIAGNOSTIC MONITORING TEST RESULTS HAVE BEEN RECORDED** • Have FREEZE FRAME DATA and DIAGNOSTIC MONITORING TEST RESULTS (Fuel system related) been recorded?	Yes	Go to the next step.
		No	Record the FREEZE FRAME DATA and DIAGNOSTIC MONITORING TEST RESULTS on the repair order, then go to the next step.
2	**VERIFY RELATED REPAIR INFORMATION AVAILABILITY** • Check for related Service Bulletins and/or on-line repair information availability. • Is any related repair information available?	Yes	Perform repair or diagnosis according to the available repair information. • If the vehicle is not repaired, go to the next step.
		No	Go to the next step.
3	**VERIFY RELATED PENDING CODE OR STORED DTC** • Turn the ignition switch off, then to the ON position (Engine off). • Verify the related PENDING CODE or stored DTCs. • Is the DTC P2178 or P2188 also present?	Yes	Go to the applicable DTC inspection. (See 01–02A–18 DTC TABLE [L3].)
		No	Go to the next step.
4	**IDENTIFY TRIGGER DTC FOR FREEZE FRAME DATA** • Is DTC P2097 on FREEZE FRAME DATA?	Yes	Go to the next step.
		No	Go to FREEZE FRAME DATA DTC inspection. (See 01–02A–18 DTC TABLE [L3].)
5	**VERIFY CURRENT INPUT SIGNAL STATUS OF MIDDLE*1/REAR*2 HO2S** • Connect the WDS or equivalent to the DLC-2. • Start the engine and warm it up completely. • Access O2S12 PID. • Read O2S12 PID under following accelerator pedal condition (in NEUTRAL). — **More than 0.45 V** when accelerator pedal is suddenly depressed (rich condition). — **Less than 0.45 V** just after release of accelerator pedal (lean condition) • Is the PID normal?	Yes	Go to the next step.
		No	Visually inspect for the exhaust gas leakage between TWC and middle*1/rear*2 HO2S. • If there is no leakage, replace rear HO2S. (See 01–15A–2 EXHAUST SYSTEM REMOVAL/ INSTALLATION [L3].) Then go to Step 11.

STEP	INSPECTION		ACTION
6	**VERIFY CURRENT INPUT SIGNAL STATUS** • Connect the WDS or equivalent to the DLC-2. • Verify the following PIDs: (See 01–40A–9 PCM INSPECTION [L3].) — ECT — MAF — TP — VSS • Are the PIDs normal?	Yes	Go to the next step.
		No	Inspect the malfunctioning part according to the inspection results. Then go to Step 11.
7	**VERIFY CURRENT INPUT SIGNAL STATUS UNDER FREEZE FRAME DATA CONDITION** • Connect the WDS or equivalent to the DLC-2. • Verify the following PIDs under FREEZE FRAME DATA condition. (See 01–40A–9 PCM INSPECTION [L3].) — ECT — MAF — TP — VSS • Are the PIDs normal?	Yes	Go to the next step.
		No	Inspect the malfunctioning part according to the inspection results. Then go to Step 11.
8	**VERIFY CURRENT INPUT SIGNAL STATUS OF FRONT HO2S** • Connect the WDS or equivalent to the DLC-2. • Start the engine and warm it up completely. • Access O2S11 PID. • Read O2S11 PID under following accelerator pedal condition (in NEUTRAL). **Except for California emission regulation applicable ATX model:** — **–1.0—1.0 A** when idle. — **More than 0.25 mA** just after release of accelerator pedal (lean condition). **California emission regulation applicable ATX model:** — **Less than 1 mA** when accelerator pedal is suddenly depressed (rich condition). — **More than 1 mA** just after release of accelerator pedal (lean condition). • Is the PID normal?	Yes	Go to the next step.
		No	Visually inspect for exhaust gas leakage between the exhaust manifold and front HO2S. • If there is no leakage, replace front HO2S. (See 01–15A–2 EXHAUST SYSTEM REMOVAL/ INSTALLATION [L3].) Then go to Step 11.
9	**INSPECT FUEL LINE PRESSURE** • Perform the "FUEL LINE PRESSURE INSPECTION". (See 01–14A–7 FUEL LINE PRESSURE INSPECTION [L3, AJ].) • Is there any malfunction?	Yes	Replace the fuel pump unit, then go to Step 11. (See 01–14A–13 FUEL PUMP UNIT REMOVAL/ INSTALLATION [L3, AJ].)
		No	Go to the next step.
10	**INSPECT LONG TERM FUEL TRIM** • Connect the WDS or equivalent to the DLC-2. • Access LONGFT1 PID. • Compare the LONGFT1 PID with recorded FREEZE FRAME DATA at Step 1. • Is the LONGFT1 PID above FREEZE FRAME DATA?	Yes	Inspect the purge valve. (See 01–16A–13 PURGE SOLENOID VALVE INSPECTION [L3, AJ].) • If there is any malfunction, replace the purge valve. Then go to Step 11.
		No	Go to the next step.
11	**VERIFY TROUBLESHOOTING OF DTC P2097 COMPLETED** • Make sure to reconnect all disconnected connectors. • Clear the DTC from the PCM memory using the WDS or equivalent. • Perform the PCM Adaptive Memory Produce Drive Mode. (See 01–02A–13 OBD-II DRIVE MODE [L3].) • Is the PENDING CODE for this DTC present?	Yes	Replace the PCM, then go to the next step. (See 01–40A–9 PCM REMOVAL/INSTALLATION [L3].)
		No	Go to the next step.
12	**VERIFY AFTER REPAIR PROCEDURE** • Perform the "AFTER REPAIR PROCEDURE". (See 01–02A–12 AFTER REPAIR PROCEDURE [L3].) • Are any DTC present?	Yes	Go to the applicable DTC inspection. (See 01–02A–18 DTC TABLE [L3].)
		No	Troubleshooting completed.

*1 : California emission regulation applicable ATX model
*2 : Except for California emission regulation applicable ATX model

DTC P2100 [L3]

E6U010202100W22

DTC P2100	Throttle actuator circuit open
DETECTION CONDITION	• The PCM monitors the electronic throttle valve motor current. If the PCM detects that the electronic throttle valve motor current is below the threshold current, the PCM determines that the electronic throttle valve motor circuit has a malfunction. **Diagnostic support note** • This is a continuous monitor (CCM). • The MIL illuminates if the PCM detects the above malfunction condition during the first drive cycle. • PENDING CODE is available if the PCM detects the above malfunction condition. • FREEZE FRAME DATA is available. • Are any DTCs is stored in the PCM memory.
POSSIBLE CAUSE	• Throttle valve motor malfunction • Open circuit between throttle body terminal F and PCM terminal 2A • Open circuit between throttle body terminal E and PCM terminal 2B • Poor connection of the throttle body connector or the PCM connector • PCM malfunction

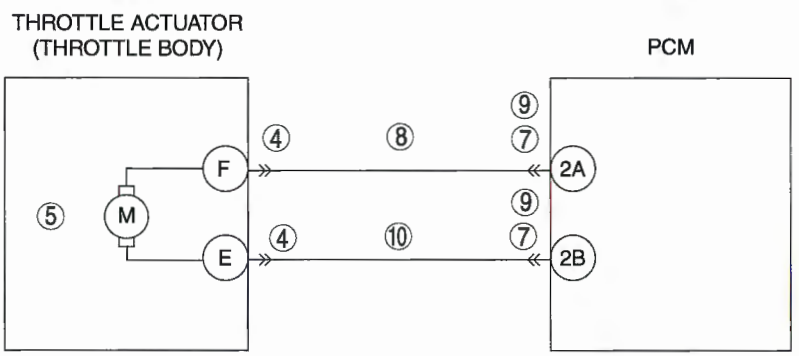

THROTTLE BODY
WIRING HARNESS-SIDE
CONNECTOR

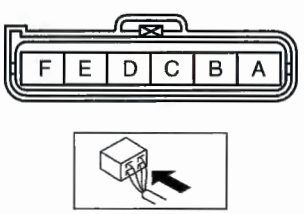

PCM
WIRING HARNESS-SIDE CONNECTOR

2BE	2BA	2AW	2AS	2AO	2AK	2AG	2AC	2Y	2U	2Q	2M	2I	2E	2A
2BF	2BB	2AX	2AT	2AP	2AL	2AH	2AD	2Z	2V	2R	2N	2J	2F	2B
2BG	2BC	2AY	2AU	2AQ	2AM	2AI	2AE	2AA	2W	2S	2O	2K	2G	2C
2BH	2BD	2AZ	2AV	2AR	2AN	2AJ	2AF	2AB	2X	2T	2P	2L	2H	2D

Diagnostic procedure

STEP	INSPECTION		ACTION
1	**VERIFY FREEZE FRAME DATA AND DIAGNOSTIC MONITORING TEST RESULTS HAS BEEN RECORDED** • Has FREEZE FRAME DATA been recorded?	Yes	Go to the next step.
		No	Record the FREEZE FRAME on the repair order, then go to the next step.
2	**VERIFY RELATED REPAIR INFORMATION AVAILABILITY** • Check for related Service Bulletins and/or on-line repair information availability. • Is any related repair information available?	Yes	Perform repair or diagnosis according to the available repair information. • If the vehicle is not repaired, go to the next step.
		No	Go to the next step.
3	**CLASSIFY INTERMITTENT CONCERN OR CONTINUOUS CONCERN** • Clear the DTC using the WDS or equivalent. • Start the engine and idle it. • Is the PENDING CODE for this DTC present?	Yes	Go to the next step.
		No	Go to the INTERMITTENT CONCERNS TROUBLESHOOTING procedure. (See 01–03A–7 INTERMITTENT CONCERN TROUBLESHOOTING [L3].)

STEP	INSPECTION		ACTION
4	**INSPECT THROTTLE BODY CONNECTOR FOR POOR CONNECTION** • Turn the ignition switch off. • Disconnect throttle body connector. • Inspect for poor connection (such as damaged, pulled out terminals, corrosion). • Is there any malfunction?	Yes	Repair or replace the terminal, then go to Step 11.
		No	Go to the next step.
5	**INSPECT THROTTLE VALVE ELECTRICAL MALFUNCTION** • Measure the resistance between throttle body terminal E and F (part-side). • Is the resistance **approx. 1.3 ohms**?	Yes	Go to the next step.
		No	Replace the throttle body, then go to Step 11.
6	**CLASSIFY MALFUNCTION ET POWER SUPPLY CIRCUIT OR CONTROL CIRCUIT** • Turn the ignition switch to the ON position (Engine off). • Measure voltage between throttle body terminal F (wiring harness-side) and body ground. • Is the voltage **B+**?	Yes	There is a malfunction at the control circuit. Go to Step 9.
		No	There is a malfunction at the power supply. Go to the next step.
7	**INSPECT PCM CONNECTOR FOR POOR CONNECTION** • Turn the ignition switch off. • Disconnect the PCM connector. • Inspect for poor connection (such as damaged, pulled out terminals, corrosion). • Is there any malfunction?	Yes	Repair the terminal, then go to Step 11.
		No	Go to the next step.
8	**INSPECT POWER CIRCUIT FOR OPEN CIRCUIT** • Turn the ignition switch off. • Inspect for continuity between throttle body terminal F (wiring harness-side) and PCM terminal 2A (wiring harness-side). • Is there continuity?	Yes	Go to the next step.
		No	Repair or replace the wiring harness for an open circuit, then go to Step 11.
9	**INSPECT PCM CONNECTOR FOR POOR CONNECTION** • Turn the ignition switch off. • Disconnect the PCM connector. • Inspect for poor connection (such as damaged, pulled out terminals, corrosion). • Is there any malfunction?	Yes	Repair the terminal, then go to Step 11.
		No	Go to the next step.
10	**INSPECT CONTROL CIRCUIT MALFUNCTION FOR OPEN CIRCUIT** • Inspect for continuity between throttle body terminal E (wiring harness-side) and PCM terminal 2B (wiring harness-side). • Is there continuity?	Yes	Go to the next step.
		No	Repair or replace the wiring harness for an open circuit, then go to the next step.
11	**VERIFY TROUBLESHOOTING OF DTC P2100 COMPLETED** • Make sure to reconnect all disconnected connectors. • Turn the ignition switch to the ON position (Engine off). • Clear the DTC from the PCM memory using the WDS or equivalent. • Start the engine and warm it up completely. • Is the same DTC present?	Yes	Replace the PCM, then go to the next step. (See 01–40A–9 PCM REMOVAL/INSTALLATION [L3].)
		No	Go to the next step.
12	**VERIFY AFTER REPAIR PROCEDURE** • Perform the "AFTER REPAIR PROCEDURE". (See 01–02A–12 AFTER REPAIR PROCEDURE [L3].) • Are any DTCs present?	Yes	Go to the applicable DTC inspection. (See 01–02A–18 DTC TABLE [L3].)
		No	Troubleshooting completed.

DTC P2101 [L3]

E6U010202100W02

DTC P2101	Throttle actuator circuit range/performance
DETECTION CONDITION	**California emission regulation applicable ATX model** • The PCM monitors the input voltage from the drive-by-wire relay when the PCM turns the drive-by-wire relay on. If the input voltage is **less than 5.0 V**, the PCM determines that the drive-by-wire relay control circuit voltage is low. • The PCM monitors the input voltage from the drive-by-wire relay when the PCM turns the drive-by-wire relay off. If the input voltage is **more than 5.0 V**, the PCM determines that the drive-by-wire relay control circuit voltage is high. **Diagnostic support note** • This is a continuous monitor. (CCM) • The MIL illuminates if the PCM detects the above malfunction conditions during first drive cycle. • PENDING CODE is available if the PCM detects the above malfunction condition. • FREEZE FRAME DATA is available. • The DTC is stored in the PCM memory.
	Except for California emission regulation applicable ATX model • If any of the following conditions continue for a specified period of time or more the PCM detects a malfunction in the throttle actuator. — The voltage of the motor power supply is **4 V or less** while the motor relay is on — There is a system error in the electrical throttle control system of the PCM — The temperature of the electrical throttle control system in the PCM is **180 °C {356 °F}** **Diagnostic support note** • This is a continuous monitor. (CCM) • MIL illuminates if PCM detects the above malfunction condition during first drive cycle. • PENDING CODE is available if PCM detects the above malfunction condition. • FREEZE FRAME DATA is available. • DTC is stored in PCM memory.
POSSIBLE CAUSE	• Drive-by-wire relay and related circuit malfunction • Main relay and related circuit malfunction • Throttle position sensor No.1 and related circuit malfunction • Throttle position sensor No.2 and related circuit malfunction • PCM malfunction

01–02A

Diagnostic procedure

STEP	INSPECTION		ACTION
1	**VERIFY FREEZE FRAME DATA HAS BEEN RECORDED** • Has FREEZE FRAME DATA been recorded?	Yes	Go to the next step.
		No	Record FREEZE FRAME DATA on repair order, then go to the next step.
2	**VERIFY RELATED REPAIR INFORMATION AVAILABILITY** • Check for related Service Bulletins and/or on-line repair information availability. • Is any related repair information available?	Yes	Perform repair or diagnosis according to the available repair information. • If the vehicle is not repaired, go to the next step.
		No	Go to the next step.
3	**VERIFY RELATED PENDING AND STORED DTCS** • Turn ignition switch to OFF, then ON (Engine off). • Verify pending and stored DTCs using the WDS or equivalent. • Is any DTC present?	Yes	Go to appropriate DTC troubleshooting procedure.
		No	Go to the next step.
4	**IDENTIFY TRIGGER DTC FOR FREEZE FRAME DATA** • Is DTC P2101 on FREEZE FRAME DATA?	Yes	Go to the next step.
		No	Go to troubleshooting procedures for DTC on FREEZE FRAME DATA.
5	**INSPECT PCM CONNECTOR FOR POOR CONNECTION** • Turn the ignition switch off. • Disconnect PCM connector. • Inspect for poor connection (such as damaged, pulled out terminals, corrosion). • Is there any malfunction?	Yes	Repair or replace the terminal, then go to Step 22.
		No	Go to the next step.

STEP	INSPECTION		ACTION
6	**INSPECT MAIN RELAY OUTPUT VOLTAGE** • Turn the ignition switch off. • Connect PCM connector. • Turn ignition switch to ON (Engine off). • Measure voltage between PCM terminal 1BE and body ground. • Is voltage **B+**?	Yes	Go to Step 13.
		No	Go to the next step.
7	**INSPECT MAIN RELAY CONNECTOR FOR POOR CONNECTION** • Turn the ignition switch off. • Disconnect main relay. • Inspect for poor connection (such as damaged, pulled out terminals, corrosion). • Is there any malfunction?	Yes	Repair or replace the terminal, then go to Step 22.
		No	Go to the next step.
8	**INSPECT POWER SUPPLY OF MAIN RELAY** • Turn ignition switch to ON (Engine off). • Measure voltage between main relay terminal D (wiring harness-side) and body ground. • Is voltage **B+**?	Yes	Go to the next step.
		No	Repair or replace harness for open circuit, then go to Step 22.
9	**INSPECT POWER SUPPLY FOR CONTROL CIRCUIT OF MAIN RELAY** • Turn ignition switch to ON (Engine off). • Measure voltage between main relay terminal A (wiring harness-side) and body ground. • Is voltage **B+**?	Yes	Go to the next step.
		No	Repair or replace harness for open circuit, then go to Step 22.
10	**INSPECT MAIN RELAY** • Inspect main relay. (See 09–21–7 RELAY INSPECTION.) • Is main relay normal?	Yes	Go to the next step.
		No	Replace main relay, then go to Step 22.
11	**INSPECT POWER CIRCUIT FOR OPEN CIRCUIT** • Turn the ignition switch off. • Disconnect main relay and PCM connector. • Check continuity between main relay terminal C (wiring harness-side) and PCM terminal 1BE (wiring harness-side). • Is there continuity?	Yes	Go to the next step.
		No	Repair or replace harness for open circuit, then go to Step 22.
12	**INSPECT CONTROL CIRCUIT FOR OPEN CIRCUIT** • Check continuity between main relay terminal E (wiring harness-side) and PCM terminal 1Q (wiring harness-side). • Is there continuity?	Yes	Go to the next step.
		No	Repair or replace harness for open circuit, then go to Step 22.
13	**INSPECT DRIVE-BY-WIRE CONTROL RELAY OUTPUT VOLTAGE** • Turn ignition switch to ON (Engine off). • Measure voltage between PCM terminal 1AX (wiring harness-side) and body ground. • Is voltage **B+**?	Yes	Go to the next step.
		No	Repair or replace harness for short to power supply, then go to Step 22.
14	**INSPECT POOR CONNECTION OF DRIVE-BY-WIRE RELAY CONNECTOR** • Turn the ignition switch off. • Disconnect drive-by-wire relay. • Check drive-by-wire relay connector (wiring harness-side) for poor connection (such as damaged, pulled out terminals, corrosion). • Is there any malfunction?	Yes	Repair or replace the terminal, then go to Step 22.
		No	Go to the next step.
15	**INSPECT POWER SUPPLY OF DRIVE-BY-WIRE RELAY** • Turn ignition switch to ON (Engine off). • Measure voltage between drive-by-wire relay terminal D (wiring harness-side) and body ground.	Yes	Go to the next step.
		No	Repair or replace harness for open circuit, then go to Step 22.

STEP	INSPECTION		ACTION
16	**INSPECT POWER SUPPLY FOR CONTROL CIRCUIT OF DRIVE-BY-WIRE RELAY** • Turn ignition switch to ON (Engine off). • Measure voltage between drive-by-wire relay terminal A (wiring harness-side) and body ground. • Is voltage **B+**?	Yes	Go to the next step.
		No	Repair or replace harness for open circuit between drive-by-wire relay terminal A and main relay terminal C, then go to Step 22.
17	**INSPECT DRIVE-BY-WIRE RELAY** • Inspect drive-by-wire relay. (See 09–21–7 RELAY INSPECTION.) • Is drive-by-wire relay normal?	Yes	Go to the next step.
		No	Replace drive-by-wire relay, then go to Step 22.
18	**INSPECT POWER CIRCUIT FOR OPEN CIRCUIT** • Turn the ignition switch off. • Check continuity between drive-by-wire relay terminal C (wiring harness-side) and PCM terminal 1BF (wiring harness-side). • Is there continuity?	Yes	Go to the next step.
		No	Repair or replace harness for open circuit, then go to Step 22.
19	**INSPECT CONTROL CIRCUIT FOR OPEN CIRCUIT** • Check continuity between drive-by-wire relay E (wiring harness-side) and PCM terminal 1AX (wiring harness-side).	Yes	Go to the next step.
		No	Repair or replace harness for open circuit, then go to Step 22.
20	**INSPECT THROTTLE POSITION SENSOR NO.1 OUTPUT VOLTAGE** • Turn the ignition switch off. • Connect PCM connector. • Turn ignition switch to ON (Engine off). • Check voltage between PCM terminal 2AK and body ground. • Is voltage **0.40—0.60 V**?	Yes	Go to the next step.
		No	Check throttle position sensor No.1 and related circuits and terminal. (See 01–40A–30 THROTTLE POSITION (TP) SENSOR INSPECTION [L3].) Repair or replace if necessary, then go to Step 22.
21	**INSPECT THROTTLE POSITION SENSOR NO.2 OUTPUT VOLTAGE** • Turn ignition switch to ON (Engine off). • Check voltage between PCM terminal 2AL and body ground. • Is voltage **4.40—4.60 V**?	Yes	Go to the next step.
		No	Check throttle position sensor No.2 and related circuits and terminal. (See 01–40A–30 THROTTLE POSITION (TP) SENSOR INSPECTION [L3].) Repair or replace as necessary, then go to the next step.
22	**VERIFY TROUBLESHOOTING OF DTC P2101 COMPLETED** • Make sure to reconnect all disconnected connectors. • Turn ignition switch to ON (Engine off). • Clear the DTC from the PCM memory using the WDS or equivalent. • Start engine and run it at idle. • Turn ignition switch to OFF then ON (Engine off). • Is same DTC present?	Yes	Replace PCM, then go to the next step. (See 01–40A–9 PCM REMOVAL/INSTALLATION [L3].)
		No	Go to the next step.
23	**VERIFY AFTER REPAIR PROCEDURE** • Perform the "After Repair Procedure". (See 01–02A–12 AFTER REPAIR PROCEDURE [L3].) • Is any DTC present?	Yes	Go to the applicable DTC inspection. (See 01–02A–18 DTC TABLE [L3].)
		No	Troubleshooting completed.

DTC P2102 [L3]

E6U010202100W23

DTC P2102	Throttle actuator circuit low input
DETECTION CONDITION	• PCM monitors the throttle actuator circuit current. If the PCM detects that the throttle actuator circuit current is excessively low, the PCM determines that the throttle actuator circuit was a malfunction. **Diagnostic support note** • This is a continuous monitor (CCM). • The MIL illuminates if the PCM detects the above malfunction condition during the first drive cycle. • The PENDING CODE is available if the PCM detects the above malfunction condition. • FREEZE FRAME DATA is available. • Are any DTCs is stored in the PCM memory.
POSSIBLE CAUSE	• Short to ground circuit between the throttle body terminal F and the PCM terminal 2A • Short to ground circuit between the throttle body terminal E and the PCM terminal 2B • Poor connection of the throttle body or the PCM connector • Throttle valve motor malfunction • PCM malfunction

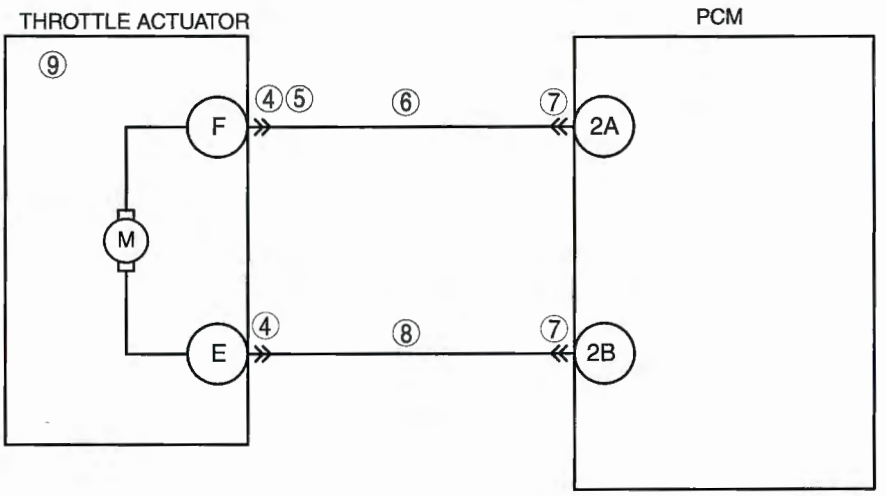

THROTTLE BODY WIRING HARNESS-SIDE CONNECTOR



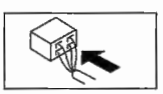

PCM WIRING HARNESS-SIDE CONNECTOR

2BE	2BA	2AW	2AS	2AO	2AK	2AG	2AC	2Y	2U	2Q	2M	2I	2E	2A
2BF	2BB	2AX	2AT	2AP	2AL	2AH	2AD	2Z	2V	2R	2N	2J	2F	2B
2BG	2BC	2AY	2AU	2AQ	2AM	2AI	2AE	2AA	2W	2S	2O	2K	2G	2C
2BH	2BD	2AZ	2AV	2AR	2AN	2AJ	2AF	2AB	2X	2T	2P	2L	2H	2D

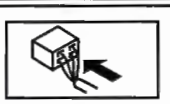

Diagnostic procedure

STEP	INSPECTION		ACTION
1	**VERIFY FREEZE FRAME DATA AND DIAGNOSTIC MONITORING TEST RESULTS HAS BEEN RECORDED** • Has FREEZE FRAME DATA been recorded?	Yes	Go to the next step.
		No	Record the FREEZE FRAME on the repair order, then go to the next step.
2	**VERIFY RELATED REPAIR INFORMATION AVAILABILITY** • Check for related Service Bulletins and/or on-line repair information availability. • Is any related repair information available?	Yes	Perform repair or diagnosis according to the available repair information. • If the vehicle is not repaired, go to the next step.
		No	Go to the next step.
3	**VERIFY RELATED PENDING CODE AND STORED DTCS** • Turn the ignition switch off, then to the ON position (Engine off). • Verify the pending or stored DTCs using the WDS or equivalent. • Is DTC P2100 also present?	Yes	Go to the appropriate DTC inspection, then go to Step 9. (See 01–02A–18 DTC TABLE [L3].)
		No	Go to the next step.
4	**INSPECT THROTTLE BODY CONNECTOR FOR POOR CONNECTION** • Turn the ignition switch off. • Disconnect the throttle body connector. • Inspect for poor connection (such as damaged, pulled-put pins, corrosion). • Is there any malfunction?	Yes	Repair or replace the terminal, then go to Step 9.
		No	Go to the next step.
5	**INSPECT POWER SUPPLY CIRCUIT OF THROTTLE ACTUATOR FOR SHORT TO GROUND** • Turn the ignition switch off. • Inspect for continuity between throttle body terminal F (wiring harness-side) and body ground. • Is there continuity?	Yes	Repair or replace the wiring harness for short to ground, then go to Step 9.
		No	Go to the next step.
6	**INSPECT PCM CONNECTOR FOR POOR CONNECTION** • Turn the ignition switch off. • Disconnect the PCM connector. • Inspect for poor connection (such as damaged/ pulled-out pins, corrosion). • Is there any malfunction?	Yes	Repair or replace the terminal, then go to Step 9.
		No	Go to the next step.
7	**INSPECT CONTROL CIRCUIT OF THROTTLE ACTUATOR FOR SHORT TO GROUND** • Turn the ignition switch off. • Inspect for continuity between throttle body terminal E (wiring harness-side) and body ground. • Is there continuity?	Yes	Repair or replace the wiring harness for short to ground, then go to Step 9.
		No	Go to the next step.
8	**INSPECT THROTTLE ACTUATOR** • Inspect the throttle actuator. • Is it normal?	Yes	Go to the next step.
		No	Replace the throttle body, then go to the next step.
9	**VERIFY TROUBLESHOOTING OF DTC P2102 COMPLETED** • Make sure to reconnect all disconnected connectors. • Turn the ignition switch to the ON position (Engine off). • Clear the DTC from the PCM memory using the WDS or equivalent. • Start the engine and warm it up completely. • Is the same DTC present?	Yes	Replace the PCM, then go to the next step. (See 01–40A–9 PCM REMOVAL/INSTALLATION [L3].)
		No	Go to the next step.
10	**VERIFY AFTER REPAIR PROCEDURE** • Perform the "AFTER REPAIR PROCEDURE". (See 01–02A–12 AFTER REPAIR PROCEDURE [L3].) • Is any DTC present?	Yes	Go to the applicable DTC inspection. (See 01–02A–18 DTC TABLE [L3].)
		No	Troubleshooting completed.

DTC P2103 [L3]

E6U010202100W04

DTC P2103	Throttle actuator circuit high input
DETECTION CONDITION	• PCM monitors the throttle actuator circuit current. PCM detects throttle actuator circuit current excessive high, PCM determines that the electronic throttle actuator circuit malfunction. **Diagnostic support note** • This is a continuous monitor (CCM). • MIL illuminates if PCM detects the above malfunction condition during first drive cycle. • PENDING CODE is available if PCM detects the above malfunction condition. • FREEZE FRAME DATA is available. • DTC is stored in PCM memory.
POSSIBLE CAUSE	• Short to power supply between throttle body terminal E and PCM terminal 2B • Throttle valve motor malfunction • PCM malfunction

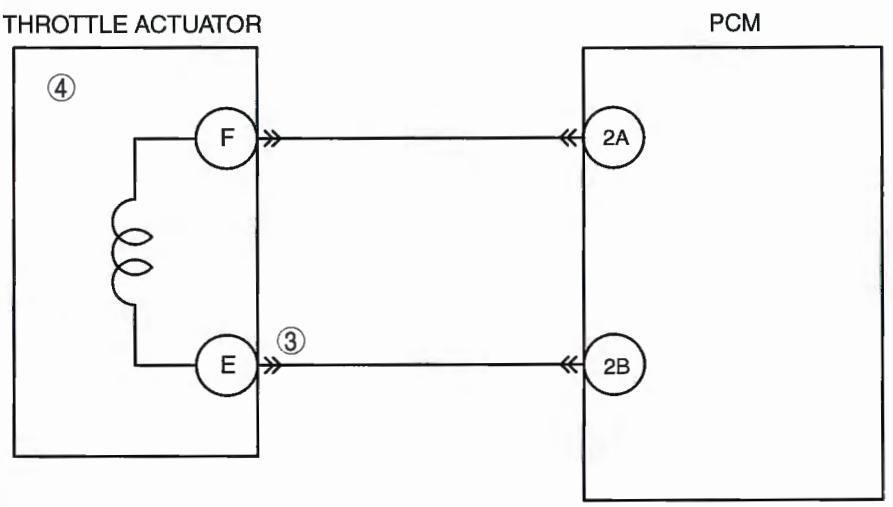

THROTTLE BODY WIRING HARNESS-SIDE CONNECTOR

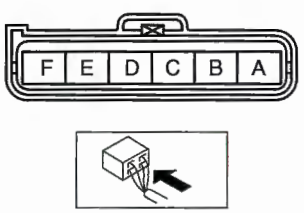

PCM WIRING HARNESS-SIDE CONNECTOR

2BE	2BA	2AW	2AS	2AO	2AK	2AG	2AC	2Y	2U	2Q	2M	2I	2E	2A
2BF	2BB	2AX	2AT	2AP	2AL	2AH	2AD	2Z	2V	2R	2N	2J	2F	2B
2BG	2BC	2AY	2AU	2AQ	2AM	2AI	2AE	2AA	2W	2S	2O	2K	2G	2C
2BH	2BD	2AZ	2AV	2AR	2AN	2AJ	2AF	2AB	2X	2T	2P	2L	2H	2D

Diagnostic procedure

STEP	INSPECTION		ACTION
1	**VERIFY FREEZE FRAME DATA HAS BEEN RECORDED** • Has FREEZE FRAME DATA been recorded?	Yes	Go to the next step.
		No	Record FREEZE FRAME DATA on repair order, then go to the next step.
2	**VERIFY RELATED REPAIR INFORMATION AVAILABILITY** • Check for related Service Bulletins and/or on-line repair information availability. • Is any related repair information available?	Yes	Perform repair or diagnosis according to the available repair information. • If the vehicle is not repaired, go to the next step.
		No	Go to the next step.
3	**INSPECT CONTROL CIRCUIT OF THROTTLE ACTUATOR FOR SHORT TO POWER SUPPLY** • Turn the ignition switch off. • Disconnect throttle body and PCM connectors. • Turn ignition switch to ON (Engine off). • Measure voltage between throttle body terminal E (wiring harness-side) and body ground. • Is voltage **B+**?	Yes	Repair or replace harness for short to power supply, then go to Step 5.
		No	Go to the next step.
4	**INSPECT THROTTLE ACTUATOR** • Inspect throttle actuator. (See 01–13A–7 THROTTLE ACTUATOR INSPECTION [L3].) • Is it normal?	Yes	Go to the next step.
		No	Replace throttle body, then go to the next step.
5	**VERIFY TROUBLESHOOTING OF DTC P2103 COMPLETED** • Make sure to reconnect all disconnected connectors. • Turn ignition switch to ON (Engine off). • Clear the DTC from the PCM memory using the WDS or equivalent. • Start engine and warm it up completely. • Is same DTC present?	Yes	Replace PCM, then go to the next step. (See 01–40A–9 PCM REMOVAL/INSTALLATION [L3].)
		No	Go to the next step.
6	**VERIFY AFTER REPAIR PROCEDURE** • Perform the "After Repair Procedure". (See 01–02A–12 AFTER REPAIR PROCEDURE [L3].) • Is any DTC present?	Yes	Go to the applicable DTC inspection. (See 01–02A–18 DTC TABLE [L3].)
		No	Troubleshooting completed.

DTC P2107 [L3]

E6U010202100W05

DTC P2107	Throttle actuator control module processor problem
DETECTION CONDITION	• Throttle actuator control module internal processor error **Diagnostic support note** • This is a continuous monitor (CCM). • The MIL illuminates if the PCM detects the above malfunction condition in the first drive cycle. • PENDING CODE is available if the PCM detects the above malfunction condition. • FREEZE FRAME DATA is available. • The DTC is stored in the PCM memory.
POSSIBLE CAUSE	• Throttle actuator control module internal processor malfunction

Diagnostic procedure

STEP	INSPECTION		ACTION
1	**VERIFY FREEZE FRAME DATA HAS BEEN RECORDED** • Has FREEZE FRAME DATA been recorded?	Yes	Go to the next step.
		No	Record the FREEZE FRAME DATA on the repair order, then go to the next step.
2	**VERIFY RELATED REPAIR INFORMATION AVAILABILITY** • Verify related Service Bulletins and/or on-line repair information availability. • Is any related repair information available?	Yes	Perform repair or diagnosis according to the available repair information. • If the vehicle is not repaired, go to the next step.
		No	Go to the next step.
3	**VERIFY TROUBLESHOOTING OF P2107 COMPLETED** • Make sure to reconnect all disconnected connectors. • Clear the DTC from the PCM memory using the WDS or equivalent. • Start the engine. • Is the same DTC present?	Yes	Replace the PCM, then go to the next step. (See 01–40A–9 PCM REMOVAL/INSTALLATION [L3].)
		No	Go to the next step.
4	**VERIFY AFTER REPAIR PROCEDURE** • Perform the "AFTER REPAIR PROCEDURE". (See 01–02A–12 AFTER REPAIR PROCEDURE [L3].) • Is any DTC present?	Yes	Go to the applicable DTC inspection. (See 01–02A–18 DTC TABLE [L3].)
		No	DTC troubleshooting completed.

DTC P2108 [L3]

E6U010202100W06

California Emission Regulation Applicable ATX Model

DTC P2108	Throttle actuator control module performance problem
DETECTION CONDITION	• PCM internal malfunction. **Diagnostic support note** • This is a continuous monitor (CCM). • The MIL illuminates if the PCM detects the above malfunction condition in the first drive cycle. • PENDING CODE is available if the PCM detects the above malfunction condition. • FREEZE FRAME DATA is available. • The DTC is stored in the PCM memory.
POSSIBLE CAUSE	• PCM internal malfunction

Diagnostic procedure

STEP	INSPECTION		ACTION
1	**VERIFY FREEZE FRAME DATA HAS BEEN RECORDED** • Has FREEZE FRAME DATA been recorded?	Yes	Go to the next step.
		No	Record the FREEZE FRAME DATA on the repair order, then go to the next step.
2	**VERIFY RELATED REPAIR INFORMATION AVAILABILITY** • Verify related Service Bulletins and/or on-line repair information availability. • Is any related repair information available?	Yes	Perform repair or diagnosis according to the available repair information. • If the vehicle is not repaired, go to the next step.
		No	Go to the next step.
3	**VERIFY TROUBLESHOOTING OF P2108 COMPLETED** • Make sure to reconnect all disconnected connectors. • Clear the DTC from the PCM memory using the WDS or equivalent. • Start the engine. • Is the same DTC present?	Yes	Replace the PCM, then go to the next step. (See 01–40A–9 PCM REMOVAL/INSTALLATION [L3].)
		No	Go to the next step.
4	**VERIFY AFTER REPAIR PROCEDURE** • Perform the "AFTER REPAIR PROCEDURE". (See 01–02A–12 AFTER REPAIR PROCEDURE [L3].) • Is any DTC present?	Yes	Go to the applicable DTC inspection. (See 01–02A–18 DTC TABLE [L3].)
		No	DTC troubleshooting completed.

Except for California Emission Regulation Applicable ATX Model

DTC P2108	Throttle actuator control module performance problem
DETECTION CONDITION	• PCM detects either following conditions, PCM determines that throttle actuator control system has malfunction. — TP sensor power supply voltage **below 4.4 V** — TP sensor No.1 output voltage **below 0.20 V or above 4.85 V** (DTC P0122 or P0123) — TP sensor No.2 output voltage **below 0.20 V or above 4.85 V** (DTC P0222 or P0223) — PCM internal circuit for TP sensor No.1 input circuit malfunction. **Diagnostic support note** • This is a continues monitor (CCM). • MIL illuminates if PCM detects the above malfunction condition during first drive cycle. • PENDING CODE is available if PCM detects the above malfunction condition. • FREEZE FRAME DATA is available. • DTC is stored in PCM memory.
POSSIBLE CAUSE	• TP sensor No.1 malfunction • TP sensor No.2 malfunction • Connector or terminal malfunction • Open circuit between throttle body terminal A and PCM terminal 2AK • Short to ground between throttle body terminal A and PCM terminal 2AK • Open circuit between throttle body terminal B and PCM terminal 2AO • Open circuit between throttle body terminal D and PCM terminal 2AP • Short to constant voltage supply between throttle body terminal A and PCM terminal 2AK • Short to constant voltage supply between throttle body terminal C and PCM terminal 2AL • PCM malfunction

Diagnostic procedure

STEP	INSPECTION		ACTION
1	**VERIFY FREEZE FRAME DATA HAS BEEN RECORDED** • Has FREEZE FRAME DATA been recorded?	Yes	Go to the next step.
		No	Record FREEZE FRAME DATA on repair order, then go to the next step.
2	**VERIFY RELATED REPAIR INFORMATION AVAILABILITY** • Check for related Service Bulletins and/or on-line repair information availability. • Is any related repair information available?	Yes	Perform repair or diagnosis according to the available repair information. • If the vehicle is not repaired, go to the next step.
		No	Go to the next step.
3	**VERIFY RELATED PENDING CODE AND STORED DTCS** • Turn ignition switch to OFF, then ON (Engine off). • Verify pending and/or stored DTCs using the WDS or equivalent. • Is the DTC P0122, P0123, P0222 or P0223 also present?	Yes	Go to appropriate DTC troubleshooting procedure, then go to Step 7.
		No	Go to the next step.
4	**VERIFY INTERMITTENT MALFUNCTION AT TP SENSOR NO.1 CIRCUIT** • Perform INTERMITTENT TROUBLESHOOTING procedure to TP sensor No.1 related harnesses and connectors. (See 01–03A–7 INTERMITTENT CONCERN TROUBLESHOOTING [L3].) • Is there any malfunction?	Yes	Repair or replace malfunctioning part, according to inspection result, the go to Step 7.
		No	Go to the next step.
5	**VERIFY INTERMITTENT MALFUNCTION AT TP SENSOR NO.2 CIRCUIT** • Perform INTERMITTENT TROUBLESHOOTING procedure to TP sensor No.2 related harnesses and connectors. (See 01–03A–7 INTERMITTENT CONCERN TROUBLESHOOTING [L3].) • Is there any malfunction	Yes	Repair or replace malfunctioning part, according to inspection result, the go to Step 7.
		No	Go to the next step.
6	**INSPECT TP SENSOR** • Inspect TP sensor. • Is TP sensor normal?	Yes	Go to the next step.
		No	Replace throttle body, then go to nest step.
7	**VERIFY TROUBLESHOOTING OF DTC P2108 COMPLETED** • Make sure to reconnect all disconnected connectors. • Clear the DTC from the PCM memory using the WDS or equivalent. • Turn ignition switch to ON (Engine off). • Is PENDING CODE for this DTC present?	Yes	Replace PCM, then go to the next step. (See 01–40A–9 PCM REMOVAL/INSTALLATION [L3].)
		No	Go to the next step.
8	**VERIFY AFTER REPAIR PROCEDURE** • Perform the "After Repair Procedure". (See 01–02A–12 AFTER REPAIR PROCEDURE [L3].) • Is any DTC present?	Yes	Go to the applicable DTC inspection. (See 01–02A–18 DTC TABLE [L3].)
		No	Troubleshooting completed.

DTC P2109 [L3]

E6U010202100W07

DTC P2109	TP sensor minimum stop range/performance problem
DETECTION CONDITION	• The PCM monitors the minimum TP when the closed TP learning is completed. If the TP is **less than 6.03%** or **more than 18.7%**, the PCM determines that there is a TP sensor minimum stop range/ performance problem. **Diagnostic support note** • This is a continuous monitor (CCM). • MIL illuminates if PCM detects the above malfunction condition during first drive cycle. • PENDING CODE is available if PCM detects the above malfunction condition. • FREEZE FRAME DATA is available. • The DTC is stored in the PCM memory.
POSSIBLE CAUSE	• Throttle actuator malfunction • Throttle valve malfunction • PCM malfunction

Diagnostic procedure

STEP	INSPECTION		ACTION
1	**VERIFY FREEZE FRAME DATA HAS BEEN RECORDED** • Has FREEZE FRAME DATA been recorded?	Yes	Go to the next step.
		No	Record the FREEZE FRAME DATA on the repair order, then go to the next step.
2	**VERIFY RELATED REPAIR INFORMATION AVAILABILITY** • Verify related Service Bulletins and/or on-line repair information availability. • Is any related repair information available?	Yes	Perform repair or diagnosis according to the available repair information. • If the vehicle is not repaired, go to the next step.
		No	Go to the next step.
3	**INSPECT THROTTLE ACTUATOR** • Inspect the throttle actuator. (See 01–13A–7 Resistance Inspection.) • Is there any malfunction?	Yes	Replace the throttle body, then go to Step 5. (See 01–13A–4 INTAKE AIR SYSTEM REMOVAL/ INSTALLATION [L3], 01–13A–4 INTAKE AIR SYSTEM REMOVAL/INSTALLATION [L3].)
		No	Go to the next step.
4	**INSPECT TP SENSOR** • Inspect the TP sensor. (See 01–40A–30 THROTTLE POSITION (TP) SENSOR INSPECTION [L3].) • Is there any malfunction?	Yes	Replace the TP sensor, then go to the next step. (See 01–13A–4 INTAKE AIR SYSTEM REMOVAL/ INSTALLATION [L3], 01–13A–4 INTAKE AIR SYSTEM REMOVAL/INSTALLATION [L3].)
		No	Go to the next step.
5	**VERIFY TROUBLESHOOTING OF DTC P2109 COMPLETED** • Make sure to reconnect all disconnected connectors. • Clear the DTC from the PCM memory using the WDS or equivalent. • Start the engine. • Is the same DTC present?	Yes	Replace the PCM, then go to the next step. (See 01–40A–9 PCM REMOVAL/INSTALLATION [L3].)
		No	Go to the next step.
6	**VERIFY AFTER REPAIR PROCEDURE** • Perform the "AFTER REPAIR PROCEDURE". (See 01–02A–12 AFTER REPAIR PROCEDURE [L3].) • Is any DTC present?	Yes	Go to the applicable DTC inspection. (See 01–02A–18 DTC TABLE [L3].)
		No	DTC troubleshooting completed.

DTC P2112 [L3]

E6U010202100W08

DTC P2112	Throttle actuator control system range/performance problem
DETECTION CONDITION	• The PCM monitors the throttle actuator control duty ratio when the engine is running. If the duty ratio is **more than 95%**, the PCM determines that there is a throttle actuator control system range/performance problem. **Diagnostic support note** • This is a continuous monitor (CCM). • MIL illuminates if PCM detects the above malfunction condition during first drive cycle. • PENDING CODE is available if PCM detects the above malfunction condition. • FREEZE FRAME DATA is available. • The DTC is stored in the PCM memory.
POSSIBLE CAUSE	• Throttle actuator control module malfunction

Diagnostic procedure

STEP	INSPECTION		ACTION
1	**VERIFY FREEZE FRAME DATA HAS BEEN RECORDED** • Has FREEZE FRAME DATA been recorded?	Yes	Go to the next step.
		No	Record the FREEZE FRAME DATA on the repair order, then go to the next step.
2	**VERIFY RELATED REPAIR INFORMATION AVAILABILITY** • Verify related Service Bulletins and/or on-line repair information availability. • Is any related repair information available?	Yes	Perform repair or diagnosis according to the available repair information. • If the vehicle is not repaired, go to the next step.
		No	Go to the next step.
3	**VERIFY TROUBLESHOOTING OF P2112 COMPLETED** • Make sure to reconnect all disconnected connectors. • Clear the DTC from the PCM memory using the WDS or equivalent. • Start the engine. • Is the same DTC present?	Yes	Replace the PCM, then go to the next step. (See 01–40A–9 PCM REMOVAL/INSTALLATION [L3].)
		No	Go to the next step.
4	**VERIFY AFTER REPAIR PROCEDURE** • Perform the "AFTER REPAIR PROCEDURE". (See 01–02A–12 AFTER REPAIR PROCEDURE [L3].) • Is any DTC present?	Yes	Go to the applicable DTC inspection. (See 01–02A–18 DTC TABLE [L3].)
		No	DTC troubleshooting completed.

DTC P2119 [L3]

E6U010202100W09

DTC P2119	Throttle actuator control throttle body range/performance problem
DETECTION CONDITION	**California emission regulation applicable ATX model** • The PCM compares the TP with the default TP when the ignition switch is off. If the different between TP is default TP is lower than threshold, the PCM determines that there is a throttle actuator control throttle body range/performance problem. **Diagnostic support note** • This is a continuous monitor (CCM). • The MIL illuminates if the PCM detects the above malfunction condition in the first drive cycle. • PENDING CODE is available if the PCM detects the above malfunction condition. • FREEZE FRAME DATA is available. • The DTC is stored in the PCM memory.
	Except for California emission regulation applicable ATX model • The PCM compares the TP with the default TP when the ignition switch is off. If the TP is higher than the default TP, the PCM determines that there is a throttle actuator control throttle body range/performance problem. **Diagnostic support note** • This is a continuous monitor (CCM). • The MIL illuminates if the PCM detects the above malfunction condition in the first drive cycle. • PENDING CODE is available if the PCM detects the above malfunction condition. • FREEZE FRAME DATA is available. • The DTC is stored in the PCM memory.
POSSIBLE CAUSE	• Throttle actuator malfunction • Throttle valve malfunction • PCM malfunction

Diagnostic procedure

STEP	INSPECTION		ACTION
1	**VERIFY FREEZE FRAME DATA HAS BEEN RECORDED** • Has FREEZE FRAME DATA been recorded?	Yes	Go to the next step.
		No	Record the FREEZE FRAME DATA on the repair order, then go to the next step.
2	**VERIFY RELATED REPAIR INFORMATION AVAILABILITY** • Verify related Service Bulletins and/or on-line repair information availability. • Is any related repair information available?	Yes	Perform repair or diagnosis according to the available repair information. • If the vehicle is not repaired, go to the next step.
		No	Go to the next step.
3	**INSPECT THROTTLE ACTUATOR** • Inspect the throttle actuator. (See 01–13A–7 Resistance Inspection.) • Is there any malfunction?	Yes	Replace the throttle body, then go to Step 5. (See 01–13A–4 INTAKE AIR SYSTEM REMOVAL/INSTALLATION [L3], 01–13A–4 INTAKE AIR SYSTEM REMOVAL/INSTALLATION [L3].)
		No	Go to the next step.
4	**INSPECT TP SENSOR** • Inspect the TP sensor. (See 01–40A–30 THROTTLE POSITION (TP) SENSOR INSPECTION [L3].) • Is there any malfunction?	Yes	Replace the TP sensor, then go to the next step. (See 01–13A–4 INTAKE AIR SYSTEM REMOVAL/INSTALLATION [L3], 01–13A–4 INTAKE AIR SYSTEM REMOVAL/INSTALLATION [L3].)
		No	Go to the next step.
5	**VERIFY TROUBLESHOOTING OF DTC P2119 COMPLETED** • Make sure to reconnect all disconnected connectors. • Clear the DTC from the PCM memory using the WDS or equivalent. • Turn the ignition switch to the ON position (Engine off), then off. • Is the PENDING CODE for this DTC present?	Yes	Replace the PCM, then go to the next step. (See 01–40A–9 PCM REMOVAL/INSTALLATION [L3].)
		No	Go to the next step.
6	**VERIFY AFTER REPAIR PROCEDURE** • Perform the "AFTER REPAIR PROCEDURE". (See 01–02A–12 AFTER REPAIR PROCEDURE [L3].) • Is any DTC present?	Yes	Go to the applicable DTC inspection. (See 01–02A–18 DTC TABLE [L3].)
		No	DTC troubleshooting completed.

DTC P2122 [L3]

E6U010202100W24

DTC P2122	APP sensor No.1 circuit low input
DETECTION CONDITION	• The PCM monitors the input voltage from APP sensor No.1 when the engine is running. If the input voltage is **less than 0.35*1, 0.2 V*2**, the PCM determines that the APP sensor No.1 circuit input voltage is low. **Diagnostic support note** • This is a continuous monitor (CCM). • The MIL illuminates if the PCM detects the above malfunction condition in the first drive cycle. • PENDING CODE is available if the PCM detects the above malfunction condition. • FREEZE FRAME DATA is available. • Are any DTCs is stored in the PCM memory.
POSSIBLE CAUSE	• APP sensor No.1 malfunction • Connector or terminal malfunction • Open circuit in wiring harness between APP sensor terminal D and PCM terminal 1AL • Short to ground in wiring harness between APP sensor terminal D and PCM terminal 1AL • Open circuit in wiring harness between APP sensor terminal F and PCM terminal 1AO • Short to ground in wiring harness between APP sensor terminal F and PCM terminal 1AO • PCM malfunction

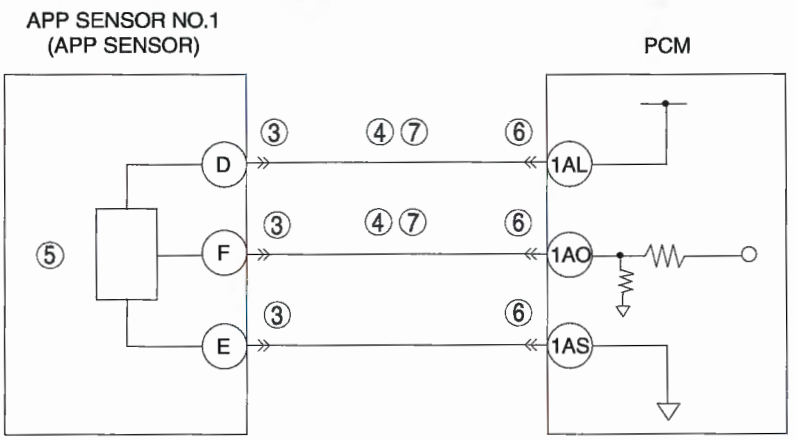

APP SENSOR
WIRING HARNESS-SIDE
CONNECTOR

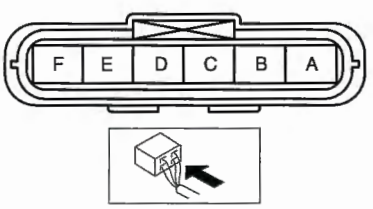

PCM
WIRING HARNESS-SIDE CONNECTOR

1BE	1BA	1AW	1AS	1AO	1AK	1AG	1AC	1Y	1U	1Q	1M	1I	1E	1A
1BF	1BB	1AX	1AT	1AP	1AL	1AH	1AD	1Z	1V	1R	1N	1J	1F	1B
1BG	1BC	1AY	1AU	1AQ	1AM	1AI	1AE	1AA	1W	1S	1O	1K	1G	1C
1BH	1BD	1AZ	1AV	1AR	1AN	1AJ	1AF	1AB	1X	1T	1P	1L	1H	1D

*1 : California emission regulation applicable ATX model
*2 : Except for California emission regulation applicable ATX model

Diagnostic procedure

STEP	INSPECTION		ACTION
1	**VERIFY FREEZE FRAME DATA AND DIAGNOSTIC MONITORING TEST RESULTS HAS BEEN RECORDED** • Has FREEZE FRAME DATA been recorded?	Yes	Go to the next step.
		No	Record the FREEZE FRAME on the repair order, then go to the next step.
2	**VERIFY RELATED REPAIR INFORMATION AVAILABILITY** • Check for related Service Bulletins and/or on-line repair information availability. • Is any related repair information available?	Yes	Perform repair or diagnosis according to the available repair information. • If the vehicle is not repaired, go to the next step.
		No	Go to the next step.
3	**INSPECT APP SENSOR CONNECTOR FOR POOR CONNECTION** • Turn the ignition switch off. • Disconnect the APP sensor connector. • Inspect for poor connection (such as damaged/pulled-out pins, corrosion). • Is there any malfunction?	Yes	Repair or replace the terminal, then go to Step 8.
		No	Go to the next step.
4	**INSPECT APP SENSOR NO.1 CIRCUIT FOR SHORT TO GROUND** • Turn the ignition switch off. • Inspect for continuity between the following terminals and body ground: — APP sensor terminal D (wiring harness-side) and body ground — APP sensor terminal F (wiring harness-side) and body ground • Is there continuity?	Yes	Repair or replace the wiring harness for a possible short to ground, then go to Step 8.
		No	Go to the next step.
5	**INSPECT APP SENSOR NO.1** • Inspect APP sensor No.1. (See 01–40A–29 ACCELERATOR PEDAL POSITION (APP) SENSOR INSPECTION [L3].) • Is there any malfunction?	Yes	Replace the APP sensor, then go to Step 8. (See 01–13A–10 ACCELERATOR PEDAL REMOVAL/INSTALLATION [L3].)
		No	Go to the next step.
6	**INSPECT PCM CONNECTOR FOR POOR CONNECTION** • Turn the ignition switch off. • Disconnect the PCM connector. • Inspect for poor connection (such as damaged/pulled-out pins, corrosion). • Is there any malfunction?	Yes	Repair or replace the terminal, then go to Step 8.
		No	Go to the next step.
7	**INSPECT APP SENSOR NO.1 CIRCUIT FOR OPEN CIRCUIT** • Turn the ignition switch off. • Inspect for continuity between the following terminals: — APP sensor terminal D (wiring harness-side) and PCM terminal 1AL (wiring harness-side) — APP sensor terminal F (wiring harness-side) and PCM terminal 1AO (wiring harness-side) • Is there continuity?	Yes	Go to the next step.
		No	Repair or replace the wiring harness for a possible an open circuit, then go to the next step.
8	**VERIFY TROUBLESHOOTING OF DTC P2122 COMPLETED** • Make sure to reconnect all disconnected connectors. • Clear the DTC from the PCM memory using the WDS or equivalent. • Start the engine. • Is the same DTC present?	Yes	Replace the PCM, then go to the next step. (See 01–40A–9 PCM REMOVAL/INSTALLATION [L3].)
		No	Go to the next step.
9	**VERIFY AFTER REPAIR PROCEDURE** • Perform the "AFTER REPAIR PROCEDURE". (See 01–02A–12 AFTER REPAIR PROCEDURE [L3].) • Is any DTC present?	Yes	Go to the applicable DTC inspection. (See 01–02A–18 DTC TABLE [L3].)
		No	DTC troubleshooting completed.

DTC P2123 [L3]

E6U010202100W25

DTC P2123	APP sensor No.1 circuit high input
DETECTION CONDITION	• The PCM monitors the input voltage from APP sensor No.1 when the engine is running. If the input voltage is **above 4.8*1, 4.5 V*2**, the PCM determines that the APP sensor No.1 circuit input voltage is high. **Diagnostic support note** • This is a continuous monitor (CCM). • The MIL illuminates if the PCM detects the above malfunction condition in the first drive cycle. • PENDING CODE is available if the PCM detects the above malfunction condition. • FREEZE FRAME DATA is available. • Are any DTCs is stored in the PCM memory.
POSSIBLE CAUSE	• APP sensor No.1 malfunction • Connector or terminal malfunction • Short to power supply in wiring harness between APP sensor terminal F and PCM terminal 1AO • Open circuit in wiring harness between APP sensor terminal E and PCM terminal 1AS • PCM malfunction

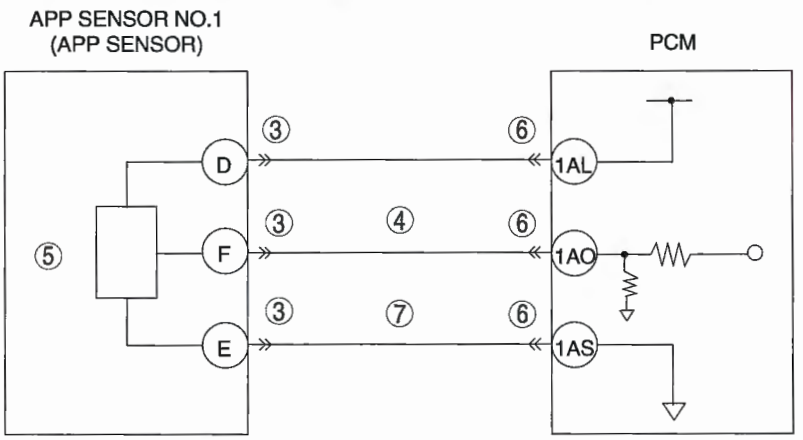

APP SENSOR
WIRING HARNESS-SIDE
CONNECTOR

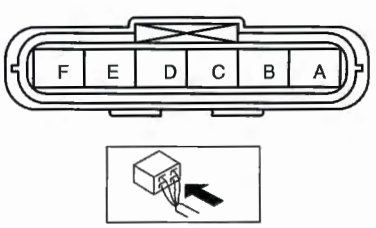

PCM
WIRING HARNESS-SIDE CONNECTOR

1BE	1BA	1AW	1AS	1AO	1AK	1AG	1AC	1Y	1U	1Q	1M	1I	1E	1A
1BF	1BB	1AX	1AT	1AP	1AL	1AH	1AD	1Z	1V	1R	1N	1J	1F	1B
1BG	1BC	1AY	1AU	1AQ	1AM	1AI	1AE	1AA	1W	1S	1O	1K	1G	1C
1BH	1BD	1AZ	1AV	1AR	1AN	1AJ	1AF	1AB	1X	1T	1P	1L	1H	1D

*1 : California emission regulation applicable ATX model
*2 : Except for California emission regulation applicable ATX model

Diagnostic procedure

STEP	INSPECTION		ACTION
1	**VERIFY FREEZE FRAME DATA AND DIAGNOSTIC MONITORING TEST RESULTS HAS BEEN RECORDED** • Has FREEZE FRAME DATA been recorded?	Yes	Go to the next step.
		No	Record the FREEZE FRAME on the repair order, then go to the next step.
2	**VERIFY RELATED REPAIR INFORMATION AVAILABILITY** • Check for related Service Bulletins and/or on-line repair information availability. • Is any related repair information available?	Yes	Perform repair or diagnosis according to the available repair information. • If the vehicle is not repaired, go to the next step.
		No	Go to the next step.
3	**INSPECT APP SENSOR CONNECTOR FOR POOR CONNECTION** • Turn the ignition switch off. • Disconnect the APP sensor connector. • Inspect for poor connection (such as damaged/ pulled-out pins, corrosion). • Is there any malfunction?	Yes	Repair or replace the terminal, then go to Step 8.
		No	Go to the next step.
4	**INSPECT APP SENSOR NO.1 SIGNAL CIRCUIT FOR SHORT TO POWER SUPPLY** • Turn the ignition switch to the ON position (Engine off). • Measure the voltage between APP sensor terminal F (wiring harness-side) and body ground. • Is the voltage **B+**?	Yes	Repair or replace the wiring harness for a possible short to power supply, then go to Step 8.
		No	Go to the next step.
5	**INSPECT APP SENSOR NO.1** • Inspect APP sensor No.1. (See 01–40A–29 ACCELERATOR PEDAL POSITION (APP) SENSOR INSPECTION [L3].) • Is there any malfunction?	Yes	Replace the APP sensor, then go to Step 8. (See 01–13A–10 ACCELERATOR PEDAL REMOVAL/ INSTALLATION [L3].)
		No	Go to the next step.
6	**INSPECT PCM CONNECTOR FOR POOR CONNECTION** • Turn the ignition switch off. • Disconnect the PCM connector. • Inspect for poor connection (such as damaged/ pulled-out pins, corrosion). • Is there any malfunction?	Yes	Repair or replace the terminal, then go to Step 8.
		No	Go to the next step.
7	**INSPECT APP SENSOR NO.1 GROUND CIRCUIT FOR OPEN CIRCUIT** • Turn the ignition switch off. • Inspect for continuity between APP sensor terminal E (wiring harness-side) and PCM terminal 1AS (wiring harness-side). • Is there continuity?	Yes	Go to the next step.
		No	Repair or replace the wiring harness for a possible an open circuit, then go to the next step.
8	**VERIFY TROUBLESHOOTING OF DTC P2123 COMPLETED** • Make sure to reconnect all disconnected connectors. • Clear the DTC from the PCM memory using the WDS or equivalent. • Start the engine. • Is the same DTC present?	Yes	Replace the PCM, then go to the next step. (See 01–40A–9 PCM REMOVAL/INSTALLATION [L3].)
		No	Go to the next step.
9	**VERIFY AFTER REPAIR PROCEDURE** • Perform the "AFTER REPAIR PROCEDURE". (See 01–02A–12 AFTER REPAIR PROCEDURE [L3].) • Is any DTC present?	Yes	Go to the applicable DTC inspection. (See 01–02A–18 DTC TABLE [L3].)
		No	DTC troubleshooting completed.

DTC P2127 [L3]

E6U010202100W26

DTC P2127	APP sensor No.2 circuit low input
DETECTION CONDITION	• The PCM monitors the input voltage from APP sensor No.2 when the engine is running. If the input voltage is **less than 0.35*1, 0.2 V*2**, the PCM determines that the APP sensor No.2 circuit has a malfunction. **Diagnostic support note** • This is a continuous monitor (CCM). • The MIL illuminates if the PCM detects the above malfunction condition in the first drive cycle. • PENDING CODE is available if the PCM detects the above malfunction condition. • FREEZE FRAME DATA is available. • Are any DTCs is stored in the PCM memory.
POSSIBLE CAUSE	• APP sensor No.2 malfunction • Connector or terminal malfunction • Open circuit in wiring harness between APP sensor terminal A and PCM terminal 1AJ • Short to ground in wiring harness between APP sensor terminal A and PCM terminal 1AJ • Open circuit in wiring harness between APP sensor terminal C and PCM terminal 1AP • Short to ground in wiring harness between APP sensor terminal C and PCM terminal 1AP • PCM malfunction

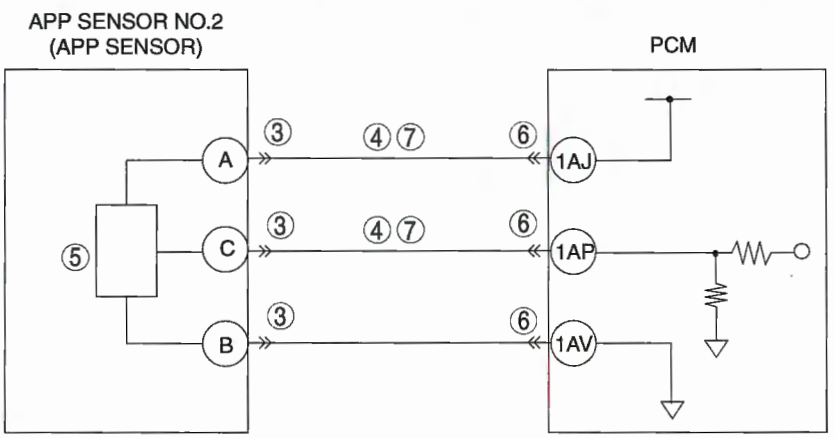

APP SENSOR
WIRING HARNESS-SIDE
CONNECTOR

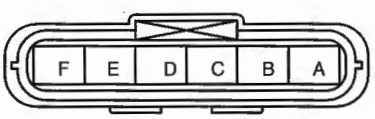

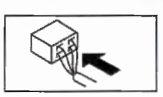

PCM
WIRING HARNESS-SIDE CONNECTOR

1BE	1BA	1AW	1AS	1AO	1AK	1AG	1AC	1Y	1U	1Q	1M	1I	1E	1A
1BF	1BB	1AX	1AT	1AP	1AL	1AH	1AD	1Z	1V	1R	1N	1J	1F	1B
1BG	1BC	1AY	1AU	1AQ	1AM	1AI	1AE	1AA	1W	1S	1O	1K	1G	1C
1BH	1BD	1AZ	1AV	1AR	1AN	1AJ	1AF	1AB	1X	1T	1P	1L	1H	1D

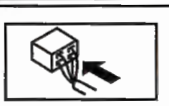

*1 : California emission regulation applicable ATX model
*2 : Except for California emission regulation applicable ATX model

Diagnostic procedure

STEP	INSPECTION		ACTION
1	**VERIFY FREEZE FRAME DATA AND DIAGNOSTIC MONITORING TEST RESULTS HAS BEEN RECORDED** • Has FREEZE FRAME DATA been recorded?	Yes	Go to the next step.
		No	Record the FREEZE FRAME on the repair order, then go to the next step.
2	**VERIFY RELATED REPAIR INFORMATION AVAILABILITY** • Check for related Service Bulletins and/or on-line repair information availability. • Is any related repair information available?	Yes	Perform repair or diagnosis according to the available repair information. • If the vehicle is not repaired, go to the next step.
		No	Go to the next step.
3	**INSPECT APP SENSOR CONNECTOR FOR POOR CONNECTION** • Turn the ignition switch off. • Disconnect the APP sensor connector. • Inspect for poor connection (such as damaged/ pulled-out pins, corrosion). • Is there any malfunction?	Yes	Repair or replace the terminal, then go to Step 8.
		No	Go to the next step.
4	**INSPECT APP SENSOR NO.2 CIRCUIT FOR SHORT TO GROUND** • Turn the ignition switch off. • Inspect for continuity between the following circuits: — APP sensor terminal C (wiring harness-side) and body ground • Is there continuity?	Yes	Repair or replace the wiring harness for a possible short to ground, then go to Step 8.
		No	Go to the next step.
5	**INSPECT APP SENSOR NO.2** • Inspect the APP sensor No.2. (See 01–40A–29 ACCELERATOR PEDAL POSITION (APP) SENSOR INSPECTION [L3].) • Is there any malfunction?	Yes	Replace the APP sensor, then go to Step 8. (See 01–13A–10 ACCELERATOR PEDAL REMOVAL/ INSTALLATION [L3].)
		No	Go to the next step.
6	**INSPECT PCM CONNECTOR FOR POOR CONNECTION** • Turn the ignition switch off. • Disconnect the PCM connector. • Inspect for poor connection (such as damaged/ pulled-out pins, corrosion). • Is there any malfunction?	Yes	Repair or replace the terminal, then go to the Step 8.
		No	Go to the next step.
7	**INSPECT APP SENSOR NO.2 CIRCUIT FOR OPEN CIRCUIT** • Turn the ignition switch off. • Inspect for continuity between the following terminals: — APP sensor terminal A (wiring harness-side) and PCM terminal 1AJ (wiring harness-side) — APP sensor terminal C (wiring harness-side) and PCM terminal 1AP (wiring harness-side) • Is there continuity?	Yes	Go to the next step.
		No	Repair or replace the wiring harness for a possible an open circuit, then go to the next step.
8	**VERIFY TROUBLESHOOTING OF DTC P2127 COMPLETED** • Make sure to reconnect all disconnected connectors. • Clear the DTC from the PCM memory using the WDS or equivalent. • Start the engine. • Is the same DTC present?	Yes	Replace the PCM, then go to the next step. (See 01–40A–9 PCM REMOVAL/INSTALLATION [L3].)
		No	Go to the next step.
9	**VERIFY AFTER REPAIR PROCEDURE** • Perform the "AFTER REPAIR PROCEDURE". (See 01–02A–12 AFTER REPAIR PROCEDURE [L3].) • Is any DTC present?	Yes	Go to the applicable DTC inspection. (See 01–02A–18 DTC TABLE [L3].)
		No	DTC troubleshooting completed.

DTC P2128 [L3]

E6U010202100W28

DTC P2128	APP sensor No.2 circuit high input
DETECTION CONDITION	• The PCM monitors the input voltage from APP sensor No.2 when the engine is running. If the input voltage is **more than 4.8**[*1]**, 4.5 V**[*2], the PCM determines that the APP sensor No.2 circuit has a malfunction. **Diagnostic support note** • This is a continuous monitor (CCM). • The MIL illuminates if the PCM detects the above malfunction condition in the first drive cycle. • PENDING CODE is available if the PCM detects the above malfunction condition. • FREEZE FRAME DATA is available. • Are any DTCs is stored in the PCM memory.
POSSIBLE CAUSE	• APP sensor No.2 malfunction • Connector or terminal malfunction • Short to power supply in wiring harness between APP sensor terminal C and PCM terminal 1AP • Open circuit in wiring harness between APP sensor terminal B and PCM terminal 1AV • PCM malfunction

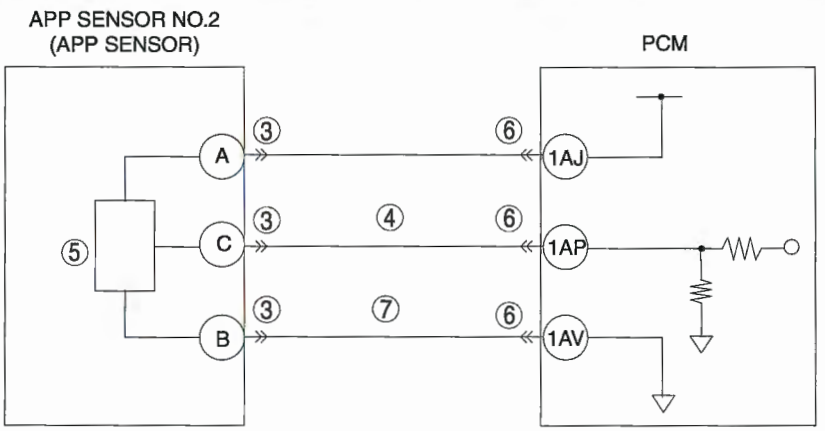

APP SENSOR
WIRING HARNESS-SIDE
CONNECTOR

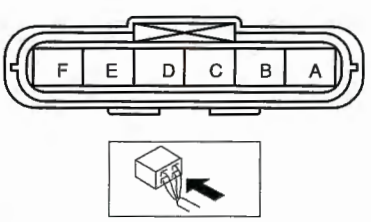

PCM
WIRING HARNESS-SIDE CONNECTOR

1BE	1BA	1AW	1AS	1AO	1AK	1AG	1AC	1Y	1U	1Q	1M	1I	1E	1A
1BF	1BB	1AX	1AT	1AP	1AL	1AH	1AD	1Z	1V	1R	1N	1J	1F	1B
1BG	1BC	1AY	1AU	1AQ	1AM	1AI	1AE	1AA	1W	1S	1O	1K	1G	1C
1BH	1BD	1AZ	1AV	1AR	1AN	1AJ	1AF	1AB	1X	1T	1P	1L	1H	1D

*1 : California emission regulation applicable ATX model
*2 : Except for California emission regulation applicable ATX model

Diagnostic procedure

STEP	INSPECTION		ACTION
1	**VERIFY FREEZE FRAME DATA AND DIAGNOSTIC MONITORING TEST RESULTS HAS BEEN RECORDED** • Has FREEZE FRAME DATA been recorded?	Yes	Go to the next step.
		No	Record the FREEZE FRAME on the repair order, then go to the next step.
2	**VERIFY RELATED REPAIR INFORMATION AVAILABILITY** • Check for related Service Bulletins and/or on-line repair information availability. • Is any related repair information available?	Yes	Perform repair or diagnosis according to the available repair information. • If the vehicle is not repaired, go to the next step.
		No	Go to the next step.
3	**INSPECT APP SENSOR CONNECTOR FOR POOR CONNECTION** • Turn the ignition switch off. • Disconnect the APP sensor connector. • Inspect for poor connection (such as damaged/pulled-out pins, corrosion). • Is there any malfunction?	Yes	Repair or replace the terminal, then go to Step 8.
		No	Go to the next step.
4	**INSPECT APP SENSOR NO.2 SIGNAL CIRCUIT FOR SHORT TO POWER SUPPLY** • Turn the ignition switch to the ON position (Engine off). • Measure the voltage between APP sensor terminal C (wiring harness-side) and body ground. • Is the voltage **B+**?	Yes	Repair or replace the wiring harness for a possible short to power supply, then go to Step 8.
		No	Go to the next step.
5	**INSPECT APP SENSOR NO.2** • Inspect APP sensor No.2. (See 01–40A–29 ACCELERATOR PEDAL POSITION (APP) SENSOR INSPECTION [L3].) • Is there any malfunction?	Yes	Replace the APP sensor, then go to Step 8. (See 01–13A–10 ACCELERATOR PEDAL REMOVAL/INSTALLATION [L3].)
		No	Go to the next step.
6	**INSPECT PCM CONNECTOR FOR POOR CONNECTION** • Turn the ignition switch off. • Disconnect the PCM connector. • Inspect for poor connection (such as damaged/pulled-out pins, corrosion). • Is there any malfunction?	Yes	Repair or replace the terminal, then go to Step 8.
		No	Go to the next step.
7	**INSPECT APP SENSOR NO.2 GROUND CIRCUIT FOR OPEN CIRCUIT** • Turn the ignition switch off. • Inspect for continuity between the following circuits: — APP sensor terminal B (wiring harness-side) and PCM terminal 1AV (wiring harness-side) • Is there continuity?	Yes	Go to the next step.
		No	Repair or replace the wiring harness for a possible an open circuit, then go to the next step.
8	**VERIFY TROUBLESHOOTING OF DTC P2128 COMPLETED** • Make sure to reconnect all disconnected connectors. • Clear the DTC from the PCM memory using the WDS or equivalent. • Start the engine. • Is the same DTC present?	Yes	Replace the PCM, then go to the next step. (See 01–40A–9 PCM REMOVAL/INSTALLATION [L3].)
		No	Go to the next step.
9	**VERIFY AFTER REPAIR PROCEDURE** • Perform the "AFTER REPAIR PROCEDURE". (See 01–02A–12 AFTER REPAIR PROCEDURE [L3].) • Is any DTC present?	Yes	Go to the applicable DTC inspection. (See 01–02A–18 DTC TABLE [L3].)
		No	DTC troubleshooting completed.

DTC P2135 [L3]

E6U010202100W14

DTC P2135	TP sensor No.1/No.2 voltage correlation problem
DETECTION CONDITION	• The PCM compares the input voltage from TP sensor No.1 with the input voltage from TP sensor No.2 when the engine is running. If the difference is more than the specification, the PCM determines that ther is a TP sensor No.1/No.2 voltage correlation problem. **Diagnostic support note** • This is a continuous monitor (CCM). • The MIL illuminates if the PCM detects the above malfunction condition in the first drive cycle. • PENDING CODE is available if the PCM detects the above malfunction condition. • FREEZE FRAME DATA is available. • The DTC is stored in the PCM memory.
POSSIBLE CAUSE	• TP sensor No.1 malfunction • TP sensor No.2 malfunction • Connector or terminal malfunction • PCM malfunction

Diagnostic procedure

STEP	INSPECTION		ACTION
1	**VERIFY FREEZE FRAME DATA HAS BEEN RECORDED** • Has FREEZE FRAME DATA been recorded?	Yes	Go to the next step.
		No	Record the FREEZE FRAME DATA on the repair order, then go to the next step.
2	**VERIFY RELATED REPAIR INFORMATION AVAILABILITY** • Verify related Service Bulletins and/or on-line repair information availability. • Is any related repair information available?	Yes	Perform repair or diagnosis according to the available repair information. • If the vehicle is not repaired, go to the next step.
		No	Go to the next step.
3	**INSPECT THROTTLE BODY CONNECTOR FOR POOR CONNECTION** • Turn the ignition switch off. • Disconnect the throttle body connector. • Inspect for poor connection (such as damaged/ pulled-out pins, corrosion). • Is there any malfunction?	Yes	Repair or replace the terminal, then go to Step 6.
		No	Go to the next step.
4	**INSPECT TP SENSOR** • Inspect the TP sensor. (See 01–40A–30 THROTTLE POSITION (TP) SENSOR INSPECTION [L3].) • Is there any malfunction?	Yes	Replace the throttle body, then go to Step 6. (See 01–13A–4 INTAKE AIR SYSTEM REMOVAL/ INSTALLATION [L3], 01–13A–4 INTAKE AIR SYSTEM REMOVAL/INSTALLATION [L3].)
		No	Go to the next step.
5	**INSPECT PCM CONNECTOR FOR POOR CONNECTION** • Turn the ignition switch off. • Disconnect the PCM connector. • Inspect for poor connection (such as damaged/ pulled-out pins, corrosion). • Is there any malfunction?	Yes	Repair or replace the terminal, then go to the next step.
		No	Go to the next step.
6	**VERIFY TROUBLESHOOTING OF DTC P2135 COMPLETED** • Make sure to reconnect all disconnected connectors. • Clear the DTC from the PCM memory using the WDS or equivalent. • Start the engine. • Is the same DTC present?	Yes	Replace the PCM, then go to the next step. (See 01–40A–9 PCM REMOVAL/INSTALLATION [L3].)
		No	Go to the next step.
7	**VERIFY AFTER REPAIR PROCEDURE** • Perform the "AFTER REPAIR PROCEDURE". (See 01–02A–12 AFTER REPAIR PROCEDURE [L3].) • Is any DTC present?	Yes	Go to the applicable DTC inspection. (See 01–02A–18 DTC TABLE [L3].)
		No	DTC troubleshooting completed.

DTC P2138 [L3]

E6U010202100W15

DTC P2138	APP sensor No.1/No.2 voltage correlation problem
DETECTION CONDITION	• The PCM compares the input voltage from APP sensor No.1 with the input voltage from APP sensor No.2 when the engine is running. If the difference is more than the specification, the PCM determines that there is an APP sensor No.1/No.2 angle correlation problem. **Diagnostic support note** • This is a continuous monitor (CCM). • The MIL illuminates if the PCM detects the above malfunction condition in the first drive cycle. • PENDING CODE is available if the PCM detects the above malfunction condition. • FREEZE FRAME DATA is available. • The DTC is stored in the PCM memory.
POSSIBLE CAUSE	• APP sensor No.1 malfunction • APP sensor No.2 malfunction • Connector or terminal malfunction • PCM malfunction

Diagnostic procedure

STEP	INSPECTION		ACTION
1	**VERIFY FREEZE FRAME DATA HAS BEEN RECORDED** • Has FREEZE FRAME DATA been recorded?	Yes	Go to the next step.
		No	Record the FREEZE FRAME DATA on the repair order, then go to the next step.
2	**VERIFY RELATED REPAIR INFORMATION AVAILABILITY** • Verify related Service Bulletins and/or on-line repair information availability. • Is any related repair information available?	Yes	Perform repair or diagnosis according to the available repair information. • If the vehicle is not repaired, go to the next step.
		No	Go to the next step.
3	**INSPECT APP SENSOR CONNECTOR FOR POOR CONNECTION** • Turn the ignition switch off. • Disconnect the APP sensor connector. • Inspect for poor connection (such as damaged/ pulled-out pins, corrosion). • Is there any malfunction?	Yes	Repair or replace the terminal, then go to Step 6.
		No	Go to the next step.
4	**INSPECT APP SENSOR** • Inspect the APP sensor. (See 01–40A–29 ACCELERATOR PEDAL POSITION (APP) SENSOR INSPECTION [L3].) • Is there any malfunction?	Yes	Replace the APP sensor, then go to Step 6. (See 01–13A–10 ACCELERATOR PEDAL REMOVAL/ INSTALLATION [L3].)
		No	Go to the next step.
5	**INSPECT PCM CONNECTOR FOR POOR CONNECTION** • Turn the ignition switch off. • Disconnect the PCM connector. • Inspect for poor connection (such as damaged/ pulled-out pins, corrosion). • Is there any malfunction?	Yes	Repair or replace the terminal, then go to the next step.
		No	Go to the next step.
6	**VERIFY TROUBLESHOOTING OF DTC P2138 COMPLETED** • Make sure to reconnect all disconnected connectors. • Clear the DTC from the PCM memory using the WDS or equivalent. • Start the engine. • Is the same DTC present?	Yes	Replace the PCM, then go to the next step. (See 01–40A–9 PCM REMOVAL/INSTALLATION [L3].)
		No	Go to the next step.
7	**VERIFY AFTER REPAIR PROCEDURE** • Perform the "AFTER REPAIR PROCEDURE". (See 01–02A–12 AFTER REPAIR PROCEDURE [L3].) • Is any DTC present?	Yes	Go to the applicable DTC inspection. (See 01–02A–18 DTC TABLE [L3].)
		No	DTC troubleshooting completed.

DTC P2177 [L3]

E6U010202100W16

DTC P2177	Fuel system too lean at off idle
DETECTION CONDITION	• PCM monitors short term fuel trim (SHRTFT), long term fuel trim (LONGFT) during closed loop fuel contro' at off-idle. If the LONGFT and the sum total of these fuel trims exceed preprogrammed criteria. PCM determines that fuel system is too lean at off-idle. **Diagnostic support note** • This is a continuous monitor. (Fuel system) • MIL illuminates if PCM detects above malfunction condition in two consecutive drive cycles or in one drive cycle while DTC for the same malfunction has been stored in PCM. • PENDING CODE is available if PCM detects the above malfunction condition during first drive cycle. • FREEZE FRAME DATA is available. • DTC is stored in the PCM memory.
POSSIBLE CAUSE	• Misfire • Front HO2S deterioration • Front HO2S heater malfunction • MAF sensor malfunction • Pressure regulator (built-in fuel injection pump) malfunction • Fuel pump malfunction • Fuel filter clogged or restricted • Fuel leakage on fuel line from fuel delivery pipe and fuel pump • Leakage exhaust system • Purge solenoid valve improper operation • Purge solenoid valve malfunction (stuck open) • Purge solenoid hoses improper connection • Air suction in intake-air system • Insufficient engine compression • Variable valve timing control system improper operation • PCM malfunction

Diagnostic procedure

STEP	INSPECTION		ACTION
1	**VERIFY FREEZE FRAME DATA AND DIAGNOSTIC MONITORING TEST RESULTS HAVE BEEN RECORDED** • Have FREEZE FRAME DATA and DIAGNOSTIC MONITORING TEST RESULTS (Fuel system related) been recorded?	Yes	Go to the next step.
		No	Record the FREEZE FRAME DATA and DIAGNOSTIC MONITORING TEST RESULTS on the repair order, then go to the next step.
2	**VERIFY RELATED REPAIR INFORMATION AVAILABILITY** • Verify related Service Bulletins and/or on-line repair information availability. • Is any related repair information available?	Yes	Perform repair or diagnosis according to the available repair information. • If the vehicle is not repaired, go to the next step.
		No	Go to the next step.
3	**VERIFY RELATED PENDING CODE OR STORED DTCS** • Turn the ignition switch off, then to the ON position (Engine off). • Verify related pending code or stored DTCs. • Is other DTC present?	Yes	If misfire DTC is present, go to Step 8. If other DTC is present, go to the applicable DTC inspection. (See 01–02A–18 DTC TABLE [L3].)
		No	If driveability concern is present, go to Step 8. If not, go to the next step.
4	**IDENTIFY TRIGGER DTC FOR FREEZE FRAME DATA** • Is DTC P2177 on FREEZE FRAME DATA?	Yes	Go to the next step.
		No	Go to troubleshooting procedures for DTC on FREEZE FRAME DATA.
5	**VERIFY CURRENT INPUT SIGNAL STATUS (IGNITION SWITCH TO THE ON POSITION/ IDLE)** • Access APP1, APP2, ECT, MAF, TP and VSS PIDs using the WDS or equivalent. • Is there any signal that is far out of specification when the ignition switch is at the ON position and the engine runs?	Yes	Inspect the sensor and excessive resistance in related wiring harnesses. Repair if necessary. Then go to Step 17.
		No	Go to the next step.
6	**VERIFY CURRENT INPUT SIGNAL STATUS UNDER TROUBLE CONDITION** • Inspect the same PIDs as Step 5 while simulating FREEZE FRAME DATA condition. • Is there any signal which causes drastic changes?	Yes	Inspect the sensor and related wiring harnesses repair or replace it. Then go to Step 17.
		No	Go to the next step.

STEP	INSPECTION		ACTION
7	**VERIFY CURRENT INPUT SIGNAL STATUS OF FRONT HO2S** • Access O2S11 for P2177 PID using the WDS or equivalent. • Check PID under following accelerator pedal condition (in PARK (ATX) or NEUTRAL (MTX)). • Is PID reading normal? — **–1.0—1.0 A** when idle. — **More than 0.25 mA** just after release of accelerator pedal (lean condition).	Yes	Go to the next step.
		No	Visually inspect for any gas leakage between the exhaust manifold and the front HO2S. Then go to Step 17.
8	**VERIFY CURRENT INPUT SIGNAL STATUS OF MAF SENSOR** • Connect the WDS or equivalent to the DLC-2. • Start the engine. • Access the MAF PID. • Verify that the MAF PID changes quickly according to engine speed. • Is the PID normal?	Yes	Go to the next step.
		No	Replace MAF/IAT sensor, then go to Step 17.
9	**INSPECT FOR EXCESSIVE AIR SUCTION OF INTAKE AIR SYSTEM** • Visually inspect for loosen, cracks or damages hoses on intake-air system. • Is there any malfunction?	Yes	Repair or replace source of air suction, then go to Step 17.
		No	Go to the next step.
10	**INSPECT PURGE SOLENOID OPERATION** • Perform Purge Control System Inspection. (See 01–03A–70 Purge Control System Inspection.) • Does the purge control system work properly?	Yes	Go to the next step.
		No	Repair or replace the malfunctioning part according to inspection result, then go to Step 17.
11	**INSPECT FUEL LINE PRESSURE** • Turn the ignition switch off. • Inspect the fuel line pressure. (See 01–14A–7 FUEL LINE PRESSURE INSPECTION [L3, AJ].) • Is the fuel line pressure normal?	Yes	Go to Step 12.
		No	If the fuel pressure is too high, replace fuel pump nit, then go to Step 17. If the fuel line pressure is low, go to the next step.
12	**INSPECT FUEL LINE FROM FUEL PUMP TO FUEL DELIVERY PIPE** • Visually inspect fuel line for any leakage. • Is fuel leakage found?	Yes	Replace suspected fuel line, then go to Step 17.
		No	Inspect for foreign materials or stain inside fuel filter (low-pressure). If for foreign materials or stain inside fuel filter (low-pressure), clean of fuel tank and filter. Then go to Step 17.
13	**INSPECT IGNITION SYSTEM** • Perform spark test. (See 01–03A–69 Spark Test.) • Is strong blue spark visible at each cylinder?	Yes	Go to the next step.
		No	Repair or replace the malfunctioning part according to spark test result, then go to Step 17.
14	**INSPECT ENGINE COMPRESSION** • Inspect the engine compression. (See 01–10A–4 COMPRESSION INSPECTION [L3].) • Is it normal?	Yes	Go to the next step.
		No	Implement the engine overhaul for repairs, then go to Step 17.
15	**INSPECT VARIABLE VALVE TIMING CONTROL SYSTEM OPERATION** • Inspect variable valve timing control system operation. (See 01–03A–72 Variable Valve Timing Control System Operation Inspection.) • Does variable valve timing control system work properly?	Yes	Go to the next step.
		No	Repair or replace the malfunctioning part according to inspection results, then go to Step 17.
16	**INSPECT FUEL INJECTOR OPERATION** • Remove the fuel injector. • Inspect the fuel injector (resistance, injection amount). (See 01–14A–29 FUEL INJECTOR INSPECTION [L3].) • Is the fuel injector normal?	Yes	Go to the next step.
		No	Replace the fuel injector, then go to the next step.

STEP	INSPECTION		ACTION
17	**VERIFY TROUBLESHOOTING OF DTC P2177 COMPLETED** • Make sure to reconnect all disconnected connectors. • Clear the DTC from the PCM memory using the WDS or equivalent. • Perform the PCM Adaptive Memory Produce Drive Mode. (See 01–02A–13 OBD-II DRIVE MODE [L3].) • Is the PENDING CODE for this DTC present?	Yes	Replace the PCM, then go to the next step. (See 01–40A–9 PCM REMOVAL/INSTALLATION [L3].)
		No	Go to the next step.
18	**VERIFY AFTER REPAIR PROCEDURE** • Perform "AFTER REPAIR PROCEDURE". (See 01–02A–12 AFTER REPAIR PROCEDURE [L3].) • Are any DTCs present?	Yes	Go to the applicable DTC inspection. (See 01–02A–18 DTC TABLE [L3].)
		No	Troubleshooting completed.

DTC P2178 [L3]

E6U010202100W17

DTC P2178	Fuel system too rich at off idle
DETECTION CONDITION	• PCM monitors short term fuel trim (SHRTFT), long term fuel trim (LONGFT) during closed loop fuel control at off-idle. If the LONGFT and the sum total of these fuel trims exceed preprogrammed criteria. PCM determines that fuel system is too rich at off-idle. **Diagnostic support note** • This is a continuous monitor. (Fuel system) • MIL illuminates if PCM detects above malfunction condition in two consecutive drive cycles or in one drive cycle while DTC for the same malfunction has been stored in PCM. • PENDING CODE is available if PCM detects the above malfunction condition during first drive cycle. • FREEZE FRAME DATA is available. • DTC is stored in the PCM memory.
POSSIBLE CAUSE	• Misfire • Front HO2S deterioration • Front HO2S heater malfunction • MAF sensor malfunction • Pressure regulator (built-in fuel injection pump) malfunction • Fuel pump malfunction • EGR valve improper operation • VTCS improper operation • Purge solenoid valve improper operation • Purge solenoid valve malfunction (stuck open) • Purge solenoid hoses improper connection • PCV valve malfunction • Variable valve timing control system improper operation • PCM malfunction

Diagnostic procedure

STEP	INSPECTION		ACTION
1	**VERIFY FREEZE FRAME DATA AND DIAGNOSTIC MONITORING TEST RESULTS HAVE BEEN RECORDED** • Have FREEZE FRAME DATA and DIAGNOSTIC MONITORING TEST RESULTS (Fuel system related) been recorded?	Yes	Go to the next step.
		No	Record the FREEZE FRAME DATA and DIAGNOSTIC MONITORING TEST RESULTS on the repair order, then go to the next step.
2	**VERIFY RELATED REPAIR INFORMATION AVAILABILITY** • Verify related Service Bulletins and/or on-line repair information availability. • Is any related repair information available?	Yes	Perform repair or diagnosis according to the available repair information. • If the vehicle is not repaired, go to the next step.
		No	Go to the next step.
3	**VERIFY RELATED PENDING CODE OR STORED DTCS** • Turn the ignition switch off, then to the ON position (Engine off). • Verify related pending code or stored DTCs. • Is other DTC present?	Yes	If misfire DTC is present, go to Step 8. If other DTC is present, go to the applicable DTC inspection. (See 01–02A–18 DTC TABLE [L3].)
		No	If driveability concern is present, go to Step 8. If not, go to the next step.

STEP	INSPECTION		ACTION
4	**IDENTIFY TRIGGER DTC FOR FREEZE FRAME DATA** • Is DTC P2178 on FREEZE FRAME DATA?	Yes	Go to the next step.
		No	Go to troubleshooting procedures for DTC on FREEZE FRAME DATA.
5	**VERIFY CURRENT INPUT SIGNAL STATUS (IGNITION SWITCH TO THE ON POSITION/ IDLE)** • Access APP1, APP2, ECT, MAF, TP and VSS PIDs using the WDS or equivalent. • Is there any signal that is far out of specification when the ignition switch is at the ON position and the engine runs?	Yes	Inspect the sensor and excessive resistance in related wiring harnesses. Repair if necessary. Then go to Step 16.
		No	Go to the next step.
6	**VERIFY CURRENT INPUT SIGNAL STATUS UNDER TROUBLE CONDITION** • Inspect the same PIDs as Step 5 while simulating FREEZE FRAME DATA condition. • Is there any signal which causes drastic changes?	Yes	Inspect the sensor and related wiring harnesses, repair or replace it. Then go to Step 16.
		No	Go to the next step.
7	**VERIFY CURRENT INPUT SIGNAL STATUS OF FRONT HO2S** • Access O2S11 for P2177 PID using the WDS or equivalent. • Check PID under following accelerator pedal condition (in PARK (ATX) or NEUTRAL (MTX)). • Is PID reading normal? — **–1.0—1.0 A** when idle. — **More than 0.25 mA** just after release of accelerator pedal (lean condition).	Yes	Go to the next step.
		No	Visually inspect for any gas leakage between the exhaust manifold and the front HO2S. Then go to Step 16.
8	**VERIFY CURRENT INPUT SIGNAL STATUS OF MAF SENSOR** • Connect the WDS or equivalent to the DLC-2 • Start the engine. • Access the MAF PID. • Verify that the MAF PID changes quickly according to engine speed. • Is the PID normal?	Yes	Go to the next step.
		No	Replace the MAF/IAT sensor, then go to Step 16.
9	**INSPECT PURGE SOLENOID OPERATION** • Perform Purge Control System Inspection. (See 01–03A–70 Purge Control System Inspection.) • Does purge control system work properly?	Yes	Go to the next step.
		No	Repair or replace the malfunctioning part according to inspection result, then go to Step 16.
10	**INSPECT PCV VALVE OPERATION** • Inspect the PCV valve operation. (See 01–16A–23 POSITIVE CRANKCASE VENTILATION (PCV) VALVE INSPECTION [L3].) • Is the PCV valve normal?	Yes	Go to the next step.
		No	Replace the PCV valve, then go to Step 16.
11	**INSPECT EGR VALVE OPERATION** • Perform EGR Control System Inspection. (See 01–03A–70 EGR Control System Inspection.) • Does the EGR control system work properly?	Yes	Go to the next step.
		No	Repair or replace the malfunctioning part according to inspection result, then go to Step 16.
12	**INSPECT VTCS OPERATION** • Perform Variable Tumble Control Operation Inspection. (See 01–03A–67 Variable Tumble System Operation Inspection.) • Does the VTCS work properly?	Yes	Go to the next step.
		No	Repair or replace the malfunctioning part according to inspection result, then go to Step 16.
13	**INSPECT FUEL LINE PRESSURE** • Turn the ignition switch off. • Inspect the fuel line pressure. (See 01–14A–7 FUEL LINE PRESSURE INSPECTION [L3, AJ].) • Is the fuel line pressure normal?	Yes	Go to the next step.
		No	If the fuel pressure is too high, replace fuel pump unit, then go to Step 16. If the fuel line pressure is low, go to the next step.

STEP	INSPECTION		ACTION
14	**INSPECT FUEL LINE FROM FUEL PUMP TO FUEL DELIVERY PIPE** • Visually inspect the fuel line for any leakage. • Is fuel leakage found?	Yes	Replace suspected fuel line, then go to the next step.
		No	Inspect for foreign materials or stain inside fuel filter (low-pressure). If for foreign materials or stain inside fuel filter (low-pressure), clean off the fuel tank and filter. Then go to the next step.
15	**INSPECT VARIABLE VALVE TIMING CONTROL SYSTEM OPERATION** • Inspect variable valve timing control system operation. (See 01–03A–72 Variable Valve Timing Control System Operation Inspection.) • Does variable valve timing control system work properly?	Yes	Go to the next step.
		No	Repair or replace the malfunctioning part according to inspection results, then go to the next step.
16	**VERIFY TROUBLESHOOTING OF DTC P2178 COMPLETED** • Make sure to reconnect all disconnected connectors. • Clear the DTC from the PCM memory using the WDS or equivalent. • Perform the PCM Adaptive Memory Produce Drive Mode. (See 01–02A–13 OBD-II DRIVE MODE [L3].) • Is the PENDING CODE for this DTC present?	Yes	Replace the PCM, then go to the next step. (See 01–40A–9 PCM REMOVAL/INSTALLATION [L3].)
		No	Go to the next step.
17	**VERIFY AFTER REPAIR PROCEDURE** • Perform "AFTER REPAIR PROCEDURE". (See 01–02A–12 AFTER REPAIR PROCEDURE [L3].) • Are any DTCs present?	Yes	Go to the applicable DTC inspection. (See 01–02A–18 DTC TABLE [L3].)
		No	Troubleshooting completed.

DTC P2187 [L3]

E6U010202100

DTC P2187	Fuel system too lean at idle
DETECTION CONDITION	• PCM monitors short term fuel trim (SHRTFT) and long term fuel trim (LONGFT) during closed loop fuel control at idle. If the LONGFT and the sum total of these fuel trims exceed preprogrammed criteria. PCM determines that fuel system is too lean at idle. **Diagnostic support note** • This is a continuous monitor. (Fuel system) • MIL illuminates if PCM detects above malfunction condition in two consecutive drive cycles or in one drive cycle while DTC for the same malfunction has been stored in PCM. • PENDING CODE is available if PCM detects the above malfunction condition during first drive cycle. • FREEZE FRAME DATA is available. • DTC is stored in the PCM memory.
POSSIBLE CAUSE	• Misfire • Front HO2S deterioration • Front HO2S heater malfunction • MAF sensor malfunction • Pressure regulator (built-in fuel injection pump) malfunction • Fuel pump malfunction • Fuel filter clogged or restricted • Fuel leakage on fuel line from fuel delivery pipe and fuel pump • Leakage exhaust system • Purge solenoid valve malfunction • Purge solenoid hoses improper connection • Air suction in intake-air system • Insufficient engine compression • Variable valve timing control system improper operation • PCM malfunction

Diagnostic procedure

STEP	INSPECTION		ACTION
1	**VERIFY FREEZE FRAME DATA AND DIAGNOSTIC MONITORING TEST RESULTS HAVE BEEN RECORDED** • Have FREEZE FRAME DATA and DIAGNOSTIC MONITORING TEST RESULTS (Fuel system related) been recorded?	Yes	Go to the next step.
		No	Record the FREEZE FRAME DATA and DIAGNOSTIC MONITORING TEST RESULTS on the repair order, then go to the next step.
2	**VERIFY RELATED REPAIR INFORMATION AVAILABILITY** • Verify related Service Bulletins and/or on-line repair information availability. • Is any related repair information available?	Yes	Perform repair or diagnosis according to the available repair information. • If the vehicle is not repaired, go to the next step.
		No	Go to the next step.
3	**VERIFY RELATED PENDING CODE OR STORED DTCS** • Turn the ignition switch off, then to the ON position (Engine off). • Verify related pending code or stored DTCs. • Is other DTC present?	Yes	If misfire DTC is present, go to Step 8. If other DTC is present, go to the applicable DTC inspection. (See 01–02A–18 DTC TABLE [L3].)
		No	If driveability concern is present, go to Step 8. If not, go to the next step.
4	**IDENTIFY TRIGGER DTC FOR FREEZE FRAME DATA** • Is DTC P2177 on FREEZE FRAME DATA?	Yes	Go to the next step.
		No	Go to troubleshooting procedures for DTC on FREEZE FRAME DATA.
5	**VERIFY CURRENT INPUT SIGNAL STATUS (IGNITION SWITCH TO THE ON POSITION/ IDLE)** • Access APP1, APP2, ECT, MAF and TP PIDs using the WDS or equivalent.) • Is there any signal that is far out of specification when the ignition switch is at the ON position and the engine runs?	Yes	Inspect the sensor and excessive resistance in related wiring harnesses. Repair if necessary. Then go to Step 17.
		No	Go to the next step.
6	**VERIFY CURRENT INPUT SIGNAL STATUS UNDER TROUBLE CONDITION** • Inspect the same PIDs as Step 4 while simulating FREEZE FRAME DATA condition. • Is there any signal which causes drastic changes?	Yes	Inspect the sensor and related wiring harnesses, repair or replace it. Then go to Step 17.
		No	Go to the next step.
7	**VERIFY CURRENT INPUT SIGNAL STATUS OF FRONT HO2S** • Access O2S11 for P2187 PID using the WDS or equivalent. • Check PID under following accelerator pedal condition (in PARK (ATX) or NEUTRAL (MTX)). • Is PID reading normal? — **–1.0—1.0 A** when idle. — **More than 0.25 mA** just after release of accelerator pedal (lean condition).	Yes	Go to the next step.
		No	Visually inspect for any gas leakage between exhaust manifold and front HO2S. Then go to Step 17.
8	**VERIFY CURRENT INPUT SIGNAL STATUS OF MAF SENSOR** • Connect the WDS or equivalent to the DLC-2. • Start the engine. • Access the MAF PID. • Verify that the MAF PID changes quickly according to engine speed. • Is the PID normal?	Yes	Go to the next step.
		No	Replace the MAF/IAT sensor, then go to Step 17.
9	**INSPECT FOR EXCESSIVE AIR SUCTION OF INTAKE AIR SYSTEM** • Visually inspect for loosen, cracks or damages hoses on intake-air system. • Is there any malfunction?	Yes	Repair or replace source of air suction, then go to Step 17.
		No	Go to the next step.

STEP	INSPECTION		ACTION
10	**INSPECT PURGE SOLENOID VALVE STUCK OPEN** • Turn the ignition switch off. • Disconnect both hoses from purge solenoid valve. • Blow air through purge solenoid valve. • Does air blow through?	Yes	Replace the purge solenoid valve. Then go to Step 17.
		No	Go to the next step.
11	**INSPECT FUEL LINE PRESSURE** • Turn the ignition switch off. • Inspect the fuel line pressure. (See 01–14A–7 FUEL LINE PRESSURE INSPECTION [L3, AJ].) • Is the fuel line pressure normal?	Yes	Go to Step 13.
		No	If the fuel pressure is too high, replace fuel pump unit, then go to Step 17. If the fuel line pressure is low, go to the next step.
12	**INSPECT FUEL LINE FROM FUEL PUMP TO FUEL DELIVERY PIPE** • Visually inspect fuel line for any leakage. • Is fuel leakage found?	Yes	Replace suspected fuel line, then go to Step 17.
		No	Inspect for foreign materials or stain inside fuel filter (low-pressure). If for foreign materials or stain inside fuel filter (low-pressure), clean off the fuel tank and filter. Then go to Step 17.
13	**INSPECT IGNITION SYSTEM** • Perform spark test. (See 01–03A–69 Spark Test.) • Is strong blue spark visible at each cylinder?	Yes	Go to the next step.
		No	Repair or replace the malfunctioning part according to spark test results, then go to Step 17.
14	**INSPECT ENGINE COMPRESSION** • Inspect the engine compression. (See 01–10A–4 COMPRESSION INSPECTION [L3].) • Is it normal?	Yes	Go to the next step.
		No	Implement the engine overhaul for repairs, then go to Step 17.
15	**INSPECT VARIABLE VALVE TIMING CONTROL SYSTEM OPERATION** • Inspect variable valve timing control system operation. (See 01–03A–72 Variable Valve Timing Control System Operation Inspection.) • Does variable valve timing control system work properly?	Yes	Go to the next step.
		No	Repair or replace the malfunctioning part according to inspection results, then go to Step 17.
16	**INSPECT FUEL INJECTOR OPERATION** • Remove the fuel injector. • Inspect the fuel injector (resistance, injection amount). (See 01–14A–29 FUEL INJECTOR INSPECTION [L3].) • Is the fuel injector normal?	Yes	Go to the next step.
		No	Replace the fuel injector, then go to the next step.
17	**VERIFY TROUBLESHOOTING OF DTC P2187 COMPLETED** • Make sure to reconnect all disconnected connectors. • Clear the DTC from the PCM memory using the WDS or equivalent. • Perform the PCM Adaptive Memory Produce Drive Mode. (See 01–02A–13 OBD-II DRIVE MODE [L3].) • Is the PENDING CODE for this DTC present?	Yes	Replace the PCM, then go to the next step. (See 01–40A–9 PCM REMOVAL/INSTALLATION [L3].)
		No	Go to the next step.
18	**VERIFY AFTER REPAIR PROCEDURE** • Perform "AFTER REPAIR PROCEDURE". (See 01–02A–12 AFTER REPAIR PROCEDURE [L3].) • Are any DTCs present?	Yes	Go to the applicable DTC inspection. (See 01–02A–18 DTC TABLE [L3].)
		No	Troubleshooting completed.

DTC P2188 [L3]

E6U010202100W19

DTC P2188	Fuel system too rich at idle
DETECTION CONDITION	• PCM monitors short term fuel trim (SHRTFT), long term fuel trim (LONGFT) during closed loop fuel control at idle. If the LONGFT and the sum total of these fuel trims exceed preprogrammed criteria. PCM determines that fuel system is too rich at idle. **Diagnostic support note** • This is a continuous monitor. (Fuel system) • MIL illuminates if PCM detects above malfunction condition in two consecutive drive cycles or in one drive cycle while DTC for the same malfunction has been stored in PCM. • PENDING CODE is available if PCM detects the above malfunction condition during first drive cycle. • FREEZE FRAME DATA is available. • DTC is stored in the PCM memory.
POSSIBLE CAUSE	• Misfire • Front HO2S deterioration • Front HO2S heater malfunction • MAF sensor malfunction • Pressure regulator (built-in fuel injection pump) malfunction • Fuel pump malfunction • EGR valve stuck open • VTCS improper operation • Purge solenoid valve improper operation • Purge solenoid valve malfunction (stuck open) • Purge solenoid hoses improper connection • PCV valve malfunction • Variable valve timing control system improper operation • PCM malfunction

Diagnostic procedure

STEP	INSPECTION		ACTION
1	**VERIFY FREEZE FRAME DATA AND DIAGNOSTIC MONITORING TEST RESULTS HAVE BEEN RECORDED** • Have FREEZE FRAME DATA and DIAGNOSTIC MONITORING TEST RESULTS (Fuel system related) been recorded?	Yes	Go to the next step.
		No	Record the FREEZE FRAME DATA and DIAGNOSTIC MONITORING TEST RESULTS on the repair order, then go to the next step.
2	**VERIFY RELATED REPAIR INFORMATION AVAILABILITY** • Verify related Service Bulletins and/or on-line repair information availability. • Is any related repair information available?	Yes	Perform repair or diagnosis according to the available repair information. • If the vehicle is not repaired, go to the next step.
		No	Go to the next step.
3	**VERIFY RELATED PENDING CODE OR STORED DTCS** • Turn the ignition switch off, then to the ON position (Engine off). • Verify related pending code or stored DTCs. • Is other DTC present?	Yes	If misfire DTC is present, go to Step 8. If other DTC is present, go to the applicable DTC inspection. (See 01–02A–18 DTC TABLE [L3].)
		No	If driveability concern is present, go to Step 8. If not, go to the next step.
4	**IDENTIFY TRIGGER DTC FOR FREEZE FRAME DATA** • Is DTC P2178 on FREEZE FRAME DATA?	Yes	Go to the next step.
		No	Go to troubleshooting procedures for DTC on FREEZE FRAME DATA.
5	**VERIFY CURRENT INPUT SIGNAL STATUS (IGNITION SWITCH TO THE ON POSITION/ IDLE)** • Access APP1, APP2, ECT, MAF, TP and VSS PIDs using the WDS or equivalent. • Is there any signal that is far out of specification when the ignition switch is at the ON position and engine runs?	Yes	Inspect the sensor and excessive resistance in related wiring harnesses. Repair or if necessary. Then go to Step 16.
		No	Go to the next step.
6	**VERIFY CURRENT INPUT SIGNAL STATUS UNDER TROUBLE CONDITION** • Inspect the same PIDs as Step 5 while simulating FREEZE FRAME DATA condition. • Is there any signal which causes drastic changes?	Yes	Inspect the sensor and related wiring harnesses, repair or replace it. Then go to Step 16.
		No	Go to the next step.

STEP	INSPECTION		ACTION
7	**VERIFY CURRENT INPUT SIGNAL STATUS OF FRONT HO2S** • Access O2S11 for P2188 PID using the WDS or equivalent. • Check PID under following accelerator pedal condition (in PARK (ATX) or NEUTRAL (MTX)). • Is PID reading normal? — **–1.0—1.0 A** when idle. — **More than 0.25 mA** just after release of accelerator pedal (lean condition).	Yes	Go to the next step.
		No	Visually inspect for any gas leakage between the exhaust manifold and the front HO2S. Then go to Step 16.
8	**VERIFY CURRENT INPUT SIGNAL STATUS OF MAF SENSOR** • Connect the WDS or equivalent to the DLC-2. • Start the engine. • Access the MAF PID. • Verify that the MAF PID changes quickly according to engine speed. • Is the PID normal?	Yes	Go to the next step.
		No	Replace the MAF/IAT sensor, then go to Step 16.
9	**INSPECT PURGE SOLENOID OPERATION** • Perform Purge Control System Inspection. (See 01–03A–70 Purge Control System Inspection.) • Does purge control system work properly?	Yes	Go to the next step.
		No	Repair or replace the malfunctioning part according to inspection result, then go to Step 16.
10	**INSPECT PCV VALVE OPERATION** • Inspect the PCV valve operation. (See 01–16A–23 POSITIVE CRANKCASE VENTILATION (PCV) VALVE INSPECTION [L3].) • Is the PCV valve normal?	Yes	Go to the next step.
		No	Replace the PCV valve, then go to Step 16.
11	**INSPECT VTCS OPERATION** • Perform Variable Tumble Control Operation Inspection. (See 01–03A–67 Variable Tumble System Operation Inspection.) • Does the VTCS work properly?	Yes	Go to the next step.
		No	Repair or replace the malfunctioning part according to inspection result, then go to Step 16.
12	**INSPECT FUEL LINE PRESSURE** • Turn the ignition switch off. • Inspect the fuel line pressure. (See 01–14A–7 FUEL LINE PRESSURE INSPECTION [L3, AJ].) • Is the fuel line pressure normal?	Yes	Go to Step 14.
		No	If the fuel pressure is too high, replace fuel pump nit, then go to Step 16. If the fuel line pressure is low, go to the next step.
13	**INSPECT FUEL LINE FROM FUEL PUMP TO FUEL DELIVERY PIPE** • Visually inspect fuel line for any leakage. • Is fuel leakage found?	Yes	Replace the fuel line, then go to Step 16.
		No	Inspect for foreign materials or stain inside fuel filter (low-pressure). If for foreign materials or stain inside fuel filter (low-pressure), clean off fuel tank and filter. Then go to Step 16.
14	**INSPECT VARIABLE VALVE TIMING CONTROL SYSTEM OPERATION** • Inspect variable valve timing control system operation. (See 01–03A–72 Variable Valve Timing Control System Operation Inspection.) • Does variable valve timing control system work properly?	Yes	Go to the next step.
		No	Repair or replace the malfunctioning part according to inspection results, then go to Step 16.
15	**INSPECT IF EGR VALVE IS STUCK OPEN** • Remove the EGR valve. • Does the EGR valve stuck open?	Yes	Clean or replace the EGR valve, then go to the next step.
		No	Go to the next step.

STEP	INSPECTION		ACTION
16	**VERIFY TROUBLESHOOTING OF DTC P2188 COMPLETED** • Make sure to reconnect all disconnected connectors. • Clear the DTC from the PCM memory using the WDS or equivalent. • Perform the PCM Adaptive Memory Produce Drive Mode. (See 01–02A–13 OBD-II DRIVE MODE [L3].) • Is the PENDING CODE for this DTC present?	Yes	Replace the PCM, then go to the next step. (See 01–40A–9 PCM REMOVAL/INSTALLATION [L3].)
		No	Go to the next step.
17	**VERIFY AFTER REPAIR PROCEDURE** • Perform "AFTER REPAIR PROCEDURE". (See 01–02A–12 AFTER REPAIR PROCEDURE [L3].) • Are any DTCs present?	Yes	Go to the applicable DTC inspection. (See 01–02A–18 DTC TABLE [L3].)
		No	Troubleshooting completed.

DTC P2195 [L3]

E6U010202100W20

California Emission Regulation Applicable ATX Model

DTC P2195	Front HO2S signal stuck lean
DETECTION CONDITION	• The PCM monitors the front HO2S output current when the following conditions are met. If the average output current is **more than 1.2 A** for **25 s**, the PCM determines that the front HO2S signal remains lean. **MONITORING CONDITION** — ECT: more than **70 °C {158 °F}** — Engine speed: **1,000—3,200 rpm** — MAF amount: **6—80 g/s {0.80—10.58 lb/min}** — Target A/F feedback system status: feedback control — Output voltage from the middle HO2S: **more than 0.2 V** **Diagnostic support note** • This is an intermittent monitor (HO2S). • MIL illuminates if PCM detects above malfunction condition in two consecutive drive cycles or in one drive cycle while DTC for the same malfunction has been stored in PCM. • PENDING CODE is available if PCM detects the above malfunction condition during first drive cycle. • FREEZE FRAME DATA is available. • The DTC is stored in the PCM memory.
POSSIBLE CAUSE	• Front HO2S malfunction • Fuel injector malfunction • Insufficient fuel line pressure • Leakage exhaust gas • Air suction at intake-air system malfunction • Leakage fuel • MAF sensor malfunction • ECT sensor malfunction • PCM malfunction

Diagnostic procedure

STEP	INSPECTION		ACTION
1	**VERIFY FREEZE FRAME DATA AND DIAGNOSTIC MONITORING TEST RESULTS HAVE BEEN RECORDED** • Have FREEZE FRAME DATA and DIAGNOSTIC MONITORING TEST RESULTS (HO2S related) been recorded?	Yes	Go to the next step.
		No	Record the FREEZE FRAME DATA and DIAGNOSTIC MONITORING TEST RESULTS on the repair order, then go to the next step.
2	**VERIFY RELATED REPAIR INFORMATION AVAILABILITY** • Verify related Service Bulletins and/or on-line repair information availability. • Is any related repair information available?	Yes	Perform repair or diagnosis according to the available repair information. • If the vehicle is not repaired, go to the next step.
		No	Go to the next step.

STEP	INSPECTION		ACTION
3	**VERIFY RELATED PENDING CODE OR STORED DTC** • Turn the ignition switch off, then to ON position (Engine off). • Verify the related PENDING CODE or stored DTCs. • Is the DTC P0171 also present?	Yes	Go to the applicable DTC inspection. (See 01–02A–18 DTC TABLE [L3].)
		No	Go to the next step.
4	**IDENTIFY TRIGGER DTC FOR FREEZE FRAME DATA** • Is DTC P2195 on FREEZE FRAME DATA?	Yes	Go to the next step.
		No	Go to FREEZE FRAME DATA DTC inspection. (See 01–02A–18 DTC TABLE [L3].)
5	**VERIFY CURRENT INPUT SIGNAL STATUS** • Connect the WDS or equivalent to the DLC-2. • Verify the following PIDs. (See 01–40A–9 PCM INSPECTION [L3].) — APP1 — APP2 — ECT — MAF — TP — VSS • Are the PIDs normal?	Yes	Go to the next step.
		No	Inspect the malfunctioning part according to the inspection results. Then go to Step 14.
6	**VERIFY CURRENT INPUT SIGNAL STATUS UNDER FREEZE FRAME DATA CONDITION** • Connect the WDS or equivalent to the DLC-2. • Verify the following PIDs under FREEZE FRAME DATA condition. (See 01–40A–9 PCM INSPECTION [L3].) — APP1 — APP2 — ECT — MAF — TP — VSS • Are the PIDs normal?	Yes	Go to the next step.
		No	Inspect the malfunctioning part according to the inspection results. Then go to Step 14.
7	**INSPECT INTAKE AIR SYSTEM FOR EXCESSIVE AIR SUCTION** • Visually inspect for loosen, cracks or damages hose in intake-air system. • Is there any malfunction?	Yes	Repair or replace the malfunctioning part, then go to Step 14.
		No	Go to the next step.
8	**VERIFY CURRENT INPUT SIGNAL STATUS OF MAF SENSOR** • Connect the WDS or equivalent to the DLC-2. • Start the engine. • Access the MAF PID. • Verify that the MAF PID changes quickly according to engine speed. • Is the PID normal?	Yes	Go to the next step.
		No	Replace the MAF/IAT sensor, then go to Step 14.
9	**INSPECT FRONT HO2S** • Inspect front HO2S. (See 01–40A–37 HEATED OXYGEN SENSOR (HO2S) INSPECTION [L3].) • Is there any malfunction?	Yes	Replace front HO2S, then go to Step 14. (See 01–15A–2 EXHAUST SYSTEM REMOVAL/ INSTALLATION [L3].)
		No	Go to the next step.
10	**INSPECT FUEL INJECTOR** • Inspect fuel injector. (See 01–14A–29 FUEL INJECTOR INSPECTION [L3].) • Is there any malfunction?	Yes	Replace suspected fuel injector, then go to Step 14. (See 01–14A–24 FUEL INJECTOR REMOVAL/ INSTALLATION [L3].)
		No	Go to the next step.
11	**INSPECT FUEL LINE PRESSURE** • Perform the "FUEL LINE PRESSURE INSPECTION". (See 01–14A–7 FUEL LINE PRESSURE INSPECTION [L3, AJ].) • Is there any malfunction?	Yes	Go to the next step.
		No	Go to Step 13.

STEP	INSPECTION		ACTION
12	**INSPECT FUEL SYSTEM FOR FUEL LEAKAGE** • Visually inspect fuel leakage in the fuel system. • Is there fuel leakage?	Yes	Repair or replace the malfunctioning part, then go to the next step.
		No	Replace the fuel pump unit, then go to the next step. (See 01–14A–13 FUEL PUMP UNIT REMOVAL/ INSTALLATION [L3, AJ].)
13	**VERIFY TROUBLESHOOTING OF DTC P2195 COMPLETED** • Make sure to reconnect all disconnected connectors. • Clear the DTC from the PCM memory using the WDS or equivalent. • Perform the PCM Adopted Memory Produce Drive Mode and HO2S heater, and TWC Repair Verification Drive Mode. (See 01–02A–13 OBD-II DRIVE MODE [L3].) • Is the PENDING CODE for this DTC present?	Yes	Replace the PCM, then go to the next step. (See 01–40A–9 PCM REMOVAL/INSTALLATION [L3].)
		No	Go to the next step.
14	**VERIFY AFTER REPAIR PROCEDURE** • Perform "AFTER REPAIR PROCEDURE". (See 01–02A–12 AFTER REPAIR PROCEDURE [L3].) • Is any DTC present?	Yes	Go to the applicable DTC inspection. (See 01–02A–18 DTC TABLE [L3].)
		No	Troubleshooting completed.

Except for California Emission Regulation Applicable ATX Model

DTC P2195	Front HO2S signal stuck lean
ETECTION ONDITION	• The PCM monitors the front HO2S output current when the following conditions are met. If the average output current is **more than 1.2 A** for **25 s**, the PCM determines that the front HO2S signal remains lean. **MONITORING CONDITION** — ECT: more than **70 °C {158 °F}** — Engine speed: **1,000—3,200 rpm** — Charging efficiency: **20—62.5 %** — Target A/F feedback system status: feedback control — Output voltage from the middle HO2S: **more than 0.2 V** **Diagnostic support note** • This is an intermittent monitor. (HO2S) • MIL illuminates if PCM detects above malfunction condition in two consecutive drive cycles or in one drive cycle while DTC for the same malfunction has been stored in PCM. • PENDING CODE is available if PCM detects the above malfunction condition during first drive cycle. • FREEZE FRAME DATA is available. • DTC is stored in the PCM memory.
POSSIBLE CAUSE	• Front HO2S malfunction • Fuel injector malfunction • Insufficient fuel line pressure • Leakage exhaust gas • Air suction at intake-air system malfunction • Leakage fuel • MAF sensor malfunction • ECT sensor malfunction • PCM malfunction

Diagnostic procedure

STEP	INSPECTION		ACTION
1	**VERIFY FREEZE FRAME DATA AND DIAGNOSTIC MONITORING TEST RESULTS HAVE BEEN RECORDED** • Have FREEZE FRAME DATA and DIAGNOSTIC MONITORING TEST RESULTS (HO2S related) been recorded?	Yes	Go to the next step.
		No	Record the FREEZE FRAME DATA and DIAGNOSTIC MONITORING TEST RESULTS on the repair order, then go to the next step.
2	**VERIFY RELATED REPAIR INFORMATION AVAILABILITY** • Verify related Service Bulletins and/or on-line repair information availability. • Is any related repair information available?	Yes	Perform repair or diagnosis according to the available repair information. • If the vehicle is not repaired, go to the next step.
		No	Go to the next step.

STEP	INSPECTION		ACTION
3	**VERIFY RELATED PENDING CODE OR STORED DTC** • Turn the ignition switch off, then to ON position (Engine off). • Verify the related PENDING CODE or stored DTCs. • Is the DTC P2177 or P2187 also present?	Yes	Go to the applicable DTC inspection. (See 01–02A–18 DTC TABLE [L3].)
		No	Go to the next step.
4	**IDENTIFY TRIGGER DTC FOR FREEZE FRAME DATA** • Is DTC P2195 on FREEZE FRAME DATA?	Yes	Go to the next step.
		No	Go to FREEZE FRAME DATA DTC inspection. (See 01–02A–18 DTC TABLE [L3].)
5	**VERIFY CURRENT INPUT SIGNAL STATUS** • Connect the WDS or equivalent to the DLC-2. • Verify the following PIDs. (See 01–40A–9 PCM INSPECTION [L3].) — APP1 — APP2 — ECT — MAF — TP — VSS • Are the PIDs normal?	Yes	Go to the next step.
		No	Inspect the malfunctioning part according to the inspection results. Then go to Step 14.
6	**VERIFY CURRENT INPUT SIGNAL STATUS UNDER FREEZE FRAME DATA CONDITION** • Connect the WDS or equivalent to the DLC-2. • Verify the following PIDs under FREEZE FRAME DATA condition. (See 01–40A–9 PCM INSPECTION [L3].) — APP1 — APP2 — ECT — MAF — TP — VSS • Are the PIDs normal?	Yes	Go to the next step.
		No	Inspect the malfunctioning part according to the inspection results. Then go to Step 14.
7	**INSPECT INTAKE AIR SYSTEM FOR EXCESSIVE AIR SUCTION** • Visually inspect for loosen, cracks or damages hose in intake-air system. • Is there any malfunction?	Yes	Repair or replace the malfunctioning part, then go to Step 14.
		No	Go to the next step.
8	**VERIFY CURRENT INPUT SIGNAL STATUS OF MAF SENSOR** • Connect the WDS or equivalent to the DLC-2. • Start the engine. • Access the MAF PID. • Verify that the MAF PID changes quickly according to engine speed. • Is the PID normal?	Yes	Go to the next step.
		No	Replace the MAF/IAT sensor, then go to Step 14.
9	**INSPECT FRONT HO2S** • Inspect front HO2S. (See 01–40A–37 HEATED OXYGEN SENSOR (HO2S) INSPECTION [L3].) • Is there any malfunction?	Yes	Replace front HO2S, then go to Step 14. (See 01–15A–2 EXHAUST SYSTEM REMOVAL/ INSTALLATION [L3].)
		No	Go to the next step.
10	**INSPECT FUEL INJECTOR** • Inspect fuel injector. (See 01–14A–29 FUEL INJECTOR INSPECTION [L3].) • Is there any malfunction?	Yes	Replace suspected fuel injector, then go to Step 14. (See 01–14A–24 FUEL INJECTOR REMOVAL/ INSTALLATION [L3].)
		No	Go to the next step.
11	**INSPECT FUEL LINE PRESSURE** • Perform the "FUEL LINE PRESSURE INSPECTION". (See 01–14A–7 FUEL LINE PRESSURE INSPECTION [L3, AJ].) • Is there any malfunction?	Yes	Go to the next step.
		No	Go to Step 13.

STEP	INSPECTION		ACTION
12	**INSPECT FUEL SYSTEM FOR FUEL LEAKAGE** • Visually inspect fuel leakage in the fuel system. • Is there fuel leakage?	Yes	Repair or replace the malfunctioning part, then go to the next step.
		No	Replace the fuel pump unit, then go to the next step. (See 01–14A–13 FUEL PUMP UNIT REMOVAL/INSTALLATION [L3, AJ].)
13	**VERIFY TROUBLESHOOTING OF DTC P2195 COMPLETED** • Make sure to reconnect all disconnected connectors. • Clear the DTC from the PCM memory using the WDS or equivalent. • Perform the PCM Adopted Memory Produce Drive Mode and HO2S heater, and TWC Repair Verification Drive Mode. (See 01–02A–13 OBD-II DRIVE MODE [L3].) • Is the PENDING CODE for this DTC present?	Yes	Replace the PCM, then go to the next step. (See 01–40A–9 PCM REMOVAL/INSTALLATION [L3].)
		No	Go to the next step.
14	**VERIFY AFTER REPAIR PROCEDURE** • Perform "AFTER REPAIR PROCEDURE". (See 01–02A–12 AFTER REPAIR PROCEDURE [L3].) • Is any DTC present?	Yes	Go to the applicable DTC inspection. (See 01–02A–18 DTC TABLE [L3].)
		No	Troubleshooting completed.

DTC P2196 [L3]

E6U010202100W21

California Emission Regulation Applicable ATX Model

DTC P2196	Front HO2S signal stuck rich
DETECTION CONDITION	• The PCM monitors the front HO2S output current when the following conditions are met. If the average output current is **less than 0.8 A** for **25 s**, the PCM determines that the front HO2S signal remains rich. **MONITORING CONDITION** — ECT: **more than 70 °C {158 °F}** — Engine speed: **1,000—3,200 rpm** — MAF amount: **6—80 g/s {0.80—10.58 lb/min}** — Target A/F feedback system status: feedback control — Output voltage from the middle HO2S: **less than 0.8 V** **Diagnostic support note** • This is an intermittent monitor (HO2S). • MIL illuminates if PCM detects above malfunction condition in two consecutive drive cycles or in one drive cycle while DTC for the same malfunction has been stored in PCM. • PENDING CODE is available if PCM detects the above malfunction condition during first drive cycle. • FREEZE FRAME DATA is available. • The DTC is stored in the PCM memory.
POSSIBLE CAUSE	• Front HO2S malfunction • Fuel injector malfunction • Excessive fuel pressure • Restriction in intake-air system • MAF sensor malfunction • ECT sensor malfunction • PCM malfunction

Diagnostic procedure

STEP	INSPECTION		ACTION
1	**VERIFY FREEZE FRAME DATA AND DIAGNOSTIC MONITORING TEST RESULTS HAVE BEEN RECORDED** • Have FREEZE FRAME DATA and DIAGNOSTIC MONITORING TEST RESULTS (HO2S related) been recorded?	Yes	Go to the next step.
		No	Record the FREEZE FRAME DATA and DIAGNOSTIC MONITORING TEST RESULTS on the repair order, then go to the next step.
2	**VERIFY RELATED REPAIR INFORMATION AVAILABILITY** • Verify related Service Bulletins and/or on-line repair information availability. • Is any related repair information available?	Yes	Perform repair or diagnosis according to the available repair information. • If the vehicle is not repaired, go to the next step.
		No	Go to the next step.

STEP	INSPECTION		ACTION
3	**VERIFY RELATED PENDING CODE OR STORED DTC** • Turn the ignition switch off, then ON position (Engine off). • Verify the related PENDING CODE or stored DTCs. • Is the DTC P0172 also present?	Yes	Go to the appropriate DTC inspection. (See 01–02A–18 DTC TABLE [L3].)
		No	Go to the next step.
4	**IDENTIFY TRIGGER DTC FOR FREEZE FRAME DATA** • Is DTC P2196 on FREEZE FRAME DATA?	Yes	Go to the next step.
		No	Go to FREEZE FRAME DATA DTC inspection. (See 01–02A–18 DTC TABLE [L3].)
5	**VERIFY CURRENT INPUT SIGNAL STATUS** • Connect the WDS or equivalent to the DLC-2. • Verify the following PIDs. (See 01–40A–9 PCM INSPECTION [L3].) — APP1 — APP2 — ECT — MAF — TP — VSS • Are the PIDs normal?	Yes	Go to the next step.
		No	Inspect the malfunctioning part according to the inspection results. Then go to Step 11.
6	**VERIFY CURRENT INPUT SIGNAL STATUS UNDER FREEZE FRAME DATA CONDITION** • Connect the WDS or equivalent to the DLC-2. • Verify the following PIDs under the FREEZE FRAME DATA condition. — APP1 — APP2 — ECT — MAF — TP — VSS • Are the PIDs normal?	Yes	Go to the next step.
		No	Inspect the malfunctioning part according to the inspection results. Then go to Step 11.
7	**VERIFY CURRENT INPUT SIGNAL STATUS OF MAF SENSOR** • Connect the WDS or equivalent to the DLC-2. • Start the engine. • Access the MAF PID. • Verify that the MAF PID changes quickly according to engine speed. • Is the PID normal?	Yes	Go to the next step.
		No	Replace the MAF/IAT sensor, then go to Step 11.
8	**INSPECT FRONT HO2S** • Inspect the front HO2S. (See 01–40A–37 HEATED OXYGEN SENSOR (HO2S) INSPECTION [L3].) • Is there any malfunction?	Yes	Replace front HO2S, then go to Step 11. (See 01–15A–2 EXHAUST SYSTEM REMOVAL/ INSTALLATION [L3].)
		No	Go to the next step.
9	**INSPECT FUEL INJECTOR** • Inspect fuel injector. (See 01–14A–29 FUEL INJECTOR INSPECTION [L3].) • Is there any malfunction?	Yes	Replace suspected fuel injector, then go to Step 11. (See 01–14A–24 FUEL INJECTOR REMOVAL/ INSTALLATION [L3].)
		No	Go to the next step.
10	**INSPECT FUEL LINE PRESSURE** • Perform the "FUEL LINE PRESSURE INSPECTION". (See 01–14A–7 FUEL LINE PRESSURE INSPECTION [L3, AJ].) • Is there any malfunction?	Yes	Replace the fuel pump unit, then go to the next step. (See 01–14A–13 FUEL PUMP UNIT REMOVAL/ INSTALLATION [L3, AJ].)
		No	Go to the next step.

STEP	INSPECTION		ACTION
11	**VERIFY TROUBLESHOOTING OF DTC P2196 COMPLETED** • Make sure to reconnect all disconnected connectors. • Clear the DTC from the PCM memory using the WDS or equivalent. • Perform the PCM Adopted Memory Produce Drive Mode and HO2S heater, and TWC Repair Verification Drive Mode. (See 01–02A–13 OBD-II DRIVE MODE [L3].) • Is the PENDING CODE for this DTC present?	Yes	Replace the PCM, then go to the next step. (See 01–40A–9 PCM REMOVAL/INSTALLATION [L3].)
		No	Go to the next step.
12	**VERIFY AFTER REPAIR PROCEDURE** • Perform the "AFTER REPAIR PROCEDURE". (See 01–02A–12 AFTER REPAIR PROCEDURE [L3].) • Is any DTC present?	Yes	Go to the applicable DTC inspection. (See 01–02A–18 DTC TABLE [L3].)
		No	Troubleshooting completed.

Except for California Emission Regulation Applicable ATX Model

DTC P2196	Front HO2S signal stuck rich
DETECTION CONDITION	• The PCM monitors the front HO2S output current when the following conditions are met. If the average output current is **less than 0.8 A** for **25 s**, the PCM determines that the front HO2S signal remains rich. **MONITORING CONDITION** — ECT: more than **70 °C {158 °F}** — Engine speed: **1,000—3,200 rpm** — Charging efficiency: **20—62.5 %** — Target A/F feedback system status: feedback control — Output voltage from the middle HO2S: **less than 0.8 V** **Diagnostic support note** • This is an intermittent monitor (HO2S). • MIL illuminates if PCM detects above malfunction condition in two consecutive drive cycles or in one drive cycle while DTC for the same malfunction has been stored in PCM. • PENDING CODE is available if PCM detects the above malfunction condition during first drive cycle. • FREEZE FRAME DATA is available. • DTC is stored in the PCM memory.
POSSIBLE CAUSE	• Front HO2S malfunction • Fuel injector malfunction • Excessive fuel pressure • Restriction in intake-air system • MAF sensor malfunction • ECT sensor malfunction • PCM malfunction

Diagnostic procedure

STEP	INSPECTION		ACTION
1	**VERIFY FREEZE FRAME DATA AND DIAGNOSTIC MONITORING TEST RESULTS HAVE BEEN RECORDED** • Have FREEZE FRAME DATA and DIAGNOSTIC MONITORING TEST RESULTS (HO2S related) been recorded?	Yes	Go to the next step.
		No	Record the FREEZE FRAME DATA and DIAGNOSTIC MONITORING TEST RESULTS on the repair order, then go to the next step.
2	**VERIFY RELATED REPAIR INFORMATION AVAILABILITY** • Verify related Service Bulletins and/or on-line repair information availability. • Is any related repair information available?	Yes	Perform repair or diagnosis according to the available repair information. • If the vehicle is not repaired, go to the next step.
		No	Go to the next step.
3	**VERIFY RELATED PENDING CODE OR STORED DTC** • Turn the ignition switch off, then ON position (Engine off). • Verify the related PENDING CODE or stored DTCs. • Is the DTC P2178 or P2188 also present?	Yes	Go to the appropriate DTC inspection. (See 01–02A–18 DTC TABLE [L3].)
		No	Go to the next step.

STEP	INSPECTION		ACTION
4	**IDENTIFY TRIGGER DTC FOR FREEZE FRAME DATA** • Is DTC P2196 on FREEZE FRAME DATA?	Yes	Go to the next step.
		No	Go to FREEZE FRAME DATA DTC inspection. (See 01–02A–18 DTC TABLE [L3].)
5	**VERIFY CURRENT INPUT SIGNAL STATUS** • Connect the WDS or equivalent to the DLC-2. • Verify the following PIDs. (See 01–40A–9 PCM INSPECTION [L3].) — APP1 — APP2 — ECT — MAF — TP — VSS • Are the PIDs normal?	Yes	Go to the next step.
		No	Inspect the malfunctioning part according to the inspection results. Then go to Step 11.
6	**VERIFY CURRENT INPUT SIGNAL STATUS UNDER FREEZE FRAME DATA CONDITION** • Connect the WDS or equivalent to the DLC-2. • Verify the following PIDs under the FREEZE FRAME DATA condition. — APP1 — APP2 — ECT — MAF — TP — VSS • Are the PIDs normal?	Yes	Go to the next step.
		No	Inspect the malfunctioning part according to the inspection results. Then go to Step 11.
7	**VERIFY CURRENT INPUT SIGNAL STATUS OF MAF SENSOR** • Connect the WDS or equivalent to the DLC-2. • Start the engine. • Access the MAF PID. • Verify that the MAF PID changes quickly according to engine speed. • Is the PID normal?	Yes	Go to the next step.
		No	Replace the MAF/IAT sensor, then go to Step 11.
8	**INSPECT FRONT HO2S** • Inspect the front HO2S. (See 01–40A–37 HEATED OXYGEN SENSOR (HO2S) INSPECTION [L3].) • Is there any malfunction?	Yes	Replace front HO2S, then go to Step 11. (See 01–15A–2 EXHAUST SYSTEM REMOVAL/ INSTALLATION [L3].)
		No	Go to the next step.
9	**INSPECT FUEL INJECTOR** • Inspect fuel injector. (See 01–14A–29 FUEL INJECTOR INSPECTION [L3].) • Is there any malfunction?	Yes	Replace suspected fuel injector, then go to Step 11. (See 01–14A–24 FUEL INJECTOR REMOVAL/ INSTALLATION [L3].)
		No	Go to the next step.
10	**INSPECT FUEL LINE PRESSURE** • Perform the "FUEL LINE PRESSURE INSPECTION". (See 01–14A–7 FUEL LINE PRESSURE INSPECTION [L3, AJ].) • Is there any malfunction?	Yes	Replace the fuel pump unit, then go to the next step. (See 01–14A–13 FUEL PUMP UNIT REMOVAL/ INSTALLATION [L3, AJ].)
		No	Go to the next step.
11	**VERIFY TROUBLESHOOTING OF DTC P2196 COMPLETED** • Make sure to reconnect all disconnected connectors. • Clear the DTC from the PCM memory using the WDS or equivalent. • Perform the PCM Adopted Memory Produce Drive Mode and HO2S heater, and TWC Repair Verification Drive Mode. (See 01–02A–13 OBD-II DRIVE MODE [L3].) • Is the PENDING CODE for this DTC present?	Yes	Replace the PCM, then go to the next step. (See 01–40A–9 PCM REMOVAL/INSTALLATION [L3].)
		No	Go to the next step.
12	**VERIFY AFTER REPAIR PROCEDURE** • Perform the "AFTER REPAIR PROCEDURE". (See 01–02A–12 AFTER REPAIR PROCEDURE [L3].) • Is any DTC present?	Yes	Go to the applicable DTC inspection. (See 01–02A–18 DTC TABLE [L3].)
		No	Troubleshooting completed.

DTC P2228 [L3]

E6U010202200W01

DTC P2228	BARO sensor circuit low input
DETECTION CONDITION	• PCM monitors input voltage from BARO sensor. If input voltage is **below 2.1 V**[*1], **1.95**[*2], PCM determines that BARO sensor circuit has malfunction. **Diagnostic support note** • This is a continuous monitor (CCM). • MIL illuminates if PCM detects the above malfunction condition during first drive cycle. • PENDING CODE is available if PCM detects the above malfunction condition. • FREEZE FRAME DATA is available. • DTC is stored in the PCM memory.
POSSIBLE CAUSE	• BARO sensor malfunction • PCM malfunction

*1 : California emission regulation applicable ATX model
*2 : Except for California emission regulation applicable ATX model

Diagnostic procedure

STEP	INSPECTION		ACTION
1	**VERIFY FREEZE FRAME DATA HAS BEEN RECORDED** • Has FREEZE FRAME DATA been recorded?	Yes	Go to the next step.
		No	Record FREEZE FRAME DATA on repair order, then go to the next step.
2	**VERIFY RELATED REPAIR INFORMATION AVAILABILITY** • Check for related Service Bulletins and/or on-line repair information availability. • Is any related repair information available?	Yes	Perform repair or diagnosis according to the available repair information. • If the vehicle is not repaired, go to the next step.
		No	Go to the next step.
3	**INSPECT BARO SENSOR MALFUNCTION** • Perform BARO sensor inspection. (See 01–40A–50 BAROMETRIC PRESSURE (BARO) SENSOR INSPECTION [L3 (Vehicles equipped with BARO sensor built into PCM)].) • Is BARO sensor normal?	Yes	Go to the next step.
		No	Replace BARO sensor, then go to the next step.
4	**VERIFY TROUBLESHOOTING OF DTC P2228 COMPLETED** • Make sure to reconnect all disconnected connectors. • Turn ignition switch to ON (Engine off). • Clear the DTC from the memory using the WDS or equivalent. • Start engine and warm it up completely. • Is same DTC present?	Yes	Replace PCM, then go to the next step. (See 01–40A–9 PCM REMOVAL/INSTALLATION [L3].)
		No	No concern is detected. Go to the next step.
5	**VERIFY AFTER REPAIR PROCEDURE** • Perform the "After Repair Procedure". (See 01–02A–12 AFTER REPAIR PROCEDURE [L3].) • Is any DTC present?	Yes	Go to the applicable DTC inspection. (See 01–02A–18 DTC TABLE [L3].)
		No	Troubleshooting completed.

DTC P2229 [L3]

E6U010202200W02

DTC P2229	BARO sensor circuit high input
DETECTION CONDITION	• PCM monitors input voltage from BARO sensor. If input voltage is **above 4.0 V**[*1], **4.45**[*2] PCM determines that BARO sensor circuit has malfunction. **Diagnostic support note** • This is a continuous monitor (CCM). • MIL illuminates if PCM detects the above malfunction condition during first drive cycle. • PENDING CODE is available if PCM detects the above malfunction condition. • FREEZE FRAME DATA is available. • DTC is stored in the PCM memory.
POSSIBLE CAUSE	• BARO sensor malfunction • PCM malfunction

*1 : California emission regulation applicable ATX model
*2 : Except for California emission regulation applicable ATX model

Diagnostic procedure

STEP	INSPECTION		ACTION
1	**VERIFY FREEZE FRAME DATA HAS BEEN RECORDED** • Has FREEZE FRAME DATA been recorded?	Yes	Go to the next step.
		No	Record FREEZE FRAME DATA on repair order, then go to the next step.
2	**VERIFY RELATED REPAIR INFORMATION AVAILABILITY** • Check for related Service Bulletins and/or on-line repair information availability. • Is any related repair information available?	Yes	Perform repair or diagnosis according to the available repair information. • If the vehicle is not repaired, go to the next step.
		No	Go to the next step.
3	**INSPECT BARO SENSOR MALFUNCTION** • Perform BARO sensor inspection. (See 01–40A–50 BAROMETRIC PRESSURE (BARO) SENSOR INSPECTION [L3 (Vehicles equipped with BARO sensor built into PCM)].) • Is BARO sensor normal?	Yes	Go to the next step.
		No	Replace BARO sensor, then go to the next step.
4	**VERIFY TROUBLESHOOTING OF DTC P2229 COMPLETED** • Make sure to reconnect all disconnected connectors. • Turn ignition switch to ON (Engine off). • Clear the DTC from the memory using the WDS or equivalent. • Start engine and warm it up completely. • Is same DTC present?	Yes	Replace PCM, then go to the next step. (See 01–40A–9 PCM REMOVAL/INSTALLATION [L3].)
		No	No concern is detected. Go to the next step.
5	**VERIFY AFTER REPAIR PROCEDURE** • Perform the "After Repair Procedure". (See 01–02A–12 AFTER REPAIR PROCEDURE [L3].) • Is any DTC present?	Yes	Go to the applicable DTC inspection. (See 01–02A–18 DTC TABLE [L3].)
		No	Troubleshooting completed.

DTC P2237 [L3]

E6U010202200W07

DTC P2237	Front HO2S positive current control circuit open
DETECTION CONDITION	• The PCM monitors front HO2S positive current control circuit voltage. If the voltage is not changed against the PCM control value while the engine running, the PCM determines that the front HO2S positive current control circuit is open. **Diagnostic support note** • This is a continuous monitor. (HO2S) • MIL illuminates if PCM detects the above malfunctioning condition in two consecutive drive cycles or in one drive cycle while the DTC for the same malfunction has been stored in the PCM. • PENDING CODE is available if PCM detects the above malfunction conditions during first drive cycle. • FREEZE FRAME DATA is available. • DTC is stored in the PCM memory.
POSSIBLE CAUSE	• Front HO2S malfunction • Connector or terminal malfunction • Open circuit between PCM terminal 2AD and front HO2S terminal 1A • PCM malfunction

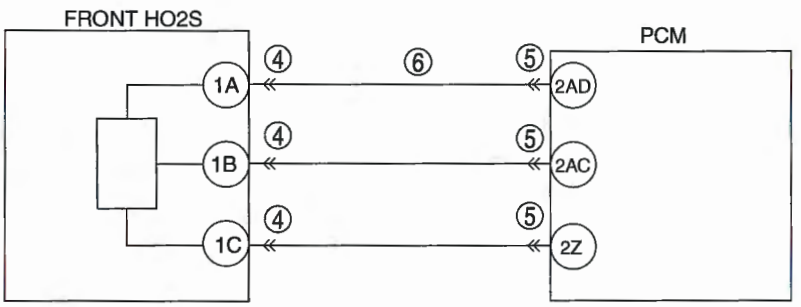

FRONT HO2S
WIRING HARNESS-SIDE CONNECTOR

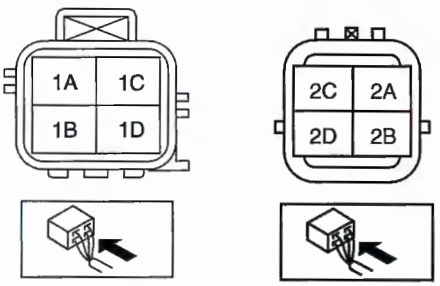

PCM
WIRING HARNESS-SIDE CONNECTOR

2BE	2BA	2AW	2AS	2AO	2AK	2AG	2AC	2Y	2U	2Q	2M	2I	2E	2A
2BF	2BB	2AX	2AT	2AP	2AL	2AH	2AD	2Z	2V	2R	2N	2J	2F	2B
2BG	2BC	2AY	2AU	2AQ	2AM	2AI	2AE	2AA	2W	2S	2O	2K	2G	2C
2BH	2BD	2AZ	2AV	2AR	2AN	2AJ	2AF	2AB	2X	2T	2P	2L	2H	2D

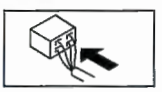

Diagnostic procedure

STEP	INSPECTION		ACTION
1	**VERIFY FREEZE FRAME DATA AND DIAGNOSTIC MONITORING TEST RESULTS HAVE BEEN RECORDED** • Have FREEZE FRAME DATA and DIAGNOSTIC MONITORING TEST RESULTS (HO2S related) been recorded?	Yes	Go to the next step.
		No	Record the FREEZE FRAME DATA and DIAGNOSTIC MONITORING TEST RESULTS on the repair order, then go to the next step.
2	**VERIFY RELATED REPAIR INFORMATION AVAILABILITY** • Verify related Service Information availability. • Is any related Service Information available?	Yes	Perform repair or diagnosis according to the available Service information. If the vehicle is not repaired, go to the next step.
		No	Go to the next step.
3	**IDENTIFY TRIGGER DTC FOR FREEZE FRAME DATA** • Is DTC P2237 on FREEZE FRAME DATA?	Yes	Go to the next step.
		No	Go to troubleshooting for DTC on FREEZE FRAME DATA. (See01–02A–18 DTC TABLE [L3].)
4	**INSPECT FRONT HO2S CONNECTOR FOR POOR CONNECTION** • Turn the ignition switch to off. • Disconnect the front HO2S connector. • Inspect for poor connection (such as damaged/ pulled-out pins, and corrosion) • Is there any malfunction?	Yes	Repair or replace the terminal, then go to Step 7.
		No	Go to the next step.
5	**INSPECT PCM CONNECTOR FOR POOR CONNECTION** • Turn the ignition switch to off. • Disconnect the PCM connector. • Inspect for poor connection (such as damaged/ pulled-out pins, and corrosion). • Is there any malfunction?	Yes	Repair or replace the terminal, then go to Step 7.
		No	Go to the next step.
6	**INSPECT FRONT HO2S POSITIVE CURRENT CIRCUIT FOR OPEN CIRCUIT** • Front HO2S and PCM connectors disconnected. • Verify the continuity between PCM terminal 2AD (wiring harness-side) and front HO2S terminal 1A (wiring harness-side). • Is there continuity?	Yes	Replace the front HO2S, then go to the next step.
		No	Repair or replace wiring harness for open, then go to the next step.
7	**VERIFY TROUBLESHOOTING OF DTC P2237 COMPLETED** • Make sure to reconnect all disconnected • Clear the DTC from the PCM memory using the WDS or equivalent. • Perform the KOEO or KOER self-test. (See 01–02A–12 KOEO/KOER SELF TEST [L3].) • Is the PENDING CODE for this DTC present?	Yes	Replace PCM, then go to the next step. (See 01–40A–9 PCM REMOVAL/INSTALLATION [L3].)
		No	Go to the next step.
8	**VERIFY AFTER REPAIR PROCEDURE** • Perform the "After Repair Procedure". (See 01–02A–12 AFTER REPAIR PROCEDURE [L3].) • Are any DTCs present?	Yes	Go to the applicable DTC inspection. (See 01–02A–18 DTC TABLE [L3].)
		No	Troubleshooting completed.

DTC P2251 [L3]

E6U010202200W08

DTC P2251	Front HO2S negative current control circuit open
DETECTION CONDITION	• The PCM monitors front HO2S negative current control circuit voltage. If the voltage is not changed against the PCM control value while the engine running, the PCM determines that the front HO2S negative current control circuit is open. **Diagnostic support note** • This is a continuous monitor. (HO2S) • MIL illuminates if PCM detects the above malfunctioning condition in two consecutive drive cycles or in one drive cycle while the DTC for the same malfunction has been stored in the PCM. • PENDING CODE is available if PCM detects the above malfunction conditions during first drive cycle. • FREEZE FRAME DATA is available. • DTC is stored in the PCM memory
POSSIBLE CAUSE	• Front HO2S malfunction • Connector or terminal malfunction • Open circuit between PCM terminal 2AC and front HO2S terminal 1B • Front HO2S heater can not be controlled • PCM malfunction

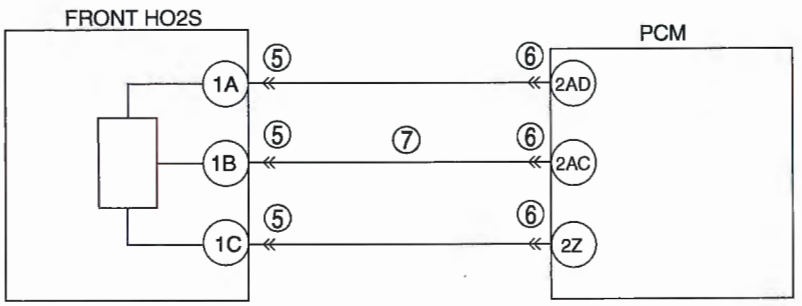

FRONT HO2S
WIRING HARNESS-SIDE CONNECTOR

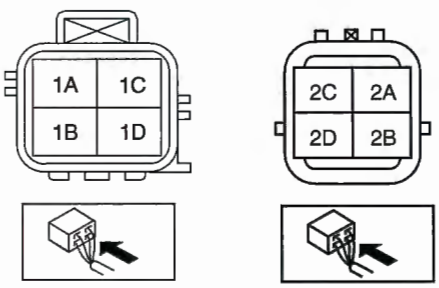

PCM
WIRING HARNESS-SIDE CONNECTOR

2BE	2BA	2AW	2AS	2AO	2AK	2AG	2AC	2Y	2U	2Q	2M	2I	2E	2A
2BF	2BB	2AX	2AT	2AP	2AL	2AH	2AD	2Z	2V	2R	2N	2J	2F	2B
2BG	2BC	2AY	2AU	2AQ	2AM	2AI	2AE	2AA	2W	2S	2O	2K	2G	2C
2BH	2BD	2AZ	2AV	2AR	2AN	2AJ	2AF	2AB	2X	2T	2P	2L	2H	2D

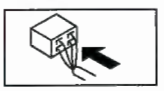

Diagnostic procedure

STEP	INSPECTION		ACTION
1	**VERIFY FREEZE FRAME DATA AND DIAGNOSTIC MONITORING TEST RESULTS HAVE BEEN RECORDED** • Have FREEZE FRAME DATA and DIAGNOSTIC MONITORING TEST RESULTS (HO2S related) been recorded?	Yes	Go to the next step.
		No	Record the FREEZE FRAME DATA and DIAGNOSTIC MONITORING TEST RESULTS on the repair order, then go to the next step.
2	**VERIFY RELATED REPAIR INFORMATION AVAILABILITY** • Verify related Service Information availability. • Is any related Service Information available?	Yes	Perform repair or diagnosis according to the available Service information. If the vehicle is not repaired, go to the next step.
		No	Go to the next step.
3	**VERIFY RELATED PENDING CODE OR STORED DTC** • Turn the ignition switch off, then ON position (Engine off). • Verify the related PENDING CODE or stored DTCs using the WDS or equivalent. • Is the DTC P0030, P0031 or P0032 also present?	Yes	Go to appropriate DTC troubleshooting procedure. (See 01–02A–18 DTC TABLE [L3].)
		No	Go to the next step.
4	**IDENTIFY TRIGGER DTC FOR FREEZE FRAME DATA** • Is the DTC P2251 on FREEZE FRAME DATA?	Yes	Go to the next step.
		No	Go to troubleshooting for DTC on FREEZE FRAME DATA. (See 01–02A–18 DTC TABLE [L3].)
5	**INSPECT FRONT HO2S CONNECTOR FOR POOR CONNECTION** • Turn the ignition switch to off. • Disconnect the front HO2S connector. • Inspect for poor connection (such as damaged/ pulled-out pins, and corrosion). • Is there any malfunction?	Yes	Repair or replace the terminal, then go to Step 8.
		No	Go to the next step.
6	**INSPECT PCM CONNECTOR FOR POOR CONNECTION** • Turn the ignition switch to off. • Disconnect the PCM connector. • Inspect for poor connection (such as damaged/ pulled-out pins, and corrosion). • Is there any malfunction?	Yes	Repair or replace the terminal, then go to Step 8.
		No	Go to the next step.
7	**INSPECT FRONT HO2S NEGATIVE CURRENT CONTROL CIRCUIT FOR OPEN CIRCUIT** • Front HO2S and PCM connectors disconnected. • Verify the continuity between PCM terminal 2AC and 1B at wiring harness-side connectors. • Is there continuity?	Yes	Replace the front HO2S, then go to the next step.
		No	Repair or replace for an open circuit, then go to the next step.
8	**VERIFY TROUBLESHOOTING OF DTC P2251 COMPLETED** • Make sure to reconnect all disconnected connectors • Clear the DTC from the PCM memory using the WDS or equivalent. • Perform the KOEO or KOER self-test. (See 01–02A–12 KOEO/KOER SELF TEST [L3].) • Is the PENDING CODE for this DTC present?	Yes	Replace the PCM, then go to the next step. (See 01–40A–9 PCM REMOVAL/INSTALLATION [L3].)
		No	Go to the next step.
9	**VERIFY AFTER REPAIR PROCEDURE** • Perform the "After Repair Procedure". (See 01–02A–12 AFTER REPAIR PROCEDURE [L3].) • Are any DTCs present?	Yes	Go to the applicable DTC inspection. (See 01–02A–18 DTC TABLE [L3].)
		No	Troubleshooting completed.

DTC P2270 [L3]

E6U010202200W03

DTC P2270	Middle HO2S signal stuck lean
DETECTION CONDITION	• The PCM monitors the middle HO2S input voltage when the following conditions are met. If the subtracted input voltage from the target voltage (calculated by PCM) is **0.4 V or less** for **30 s**, the PCM determines that the front HO2S signal remains lean. **MONITORING CONDITION** — ECT: **more than 70 °C {158 °F}** — Engine speed: **more than 1,500 rpm** — MAF amount: **more than 10 g/s {1.32 lb/min}** — Short term fuel trim: **–20—20%** — Long term fuel trim: **–15—15%** — Fuel injection system status: feedback control **Diagnostic support note** • This is a intermittent monitor. (HO2S) • MIL illuminates if PCM detects above malfunction condition in two consecutive drive cycles or in one drive cycle while DTC for the same malfunction has been stored in PCM. • PENDING CODE is available if PCM detects the above malfunction condition during first drive cycle. • FREEZE FRAME DATA is available. • DTC is stored in the PCM memory.
POSSIBLE CAUSE	• Leakage exhaust gas • Middle HO2S malfunction • Leakage fuel • Fuel injector malfunction • Air suction at intake-air system • MAF sensor malfunction • ECT sensor malfunction • PCM malfunction

Diagnostic procedure

STEP	INSPECTION		ACTION
1	**VERIFY FREEZE FRAME DATA AND DIAGNOSTIC MONITORING TEST RESULTS HAVE BEEN RECORDED** • Have FREEZE FRAME DATA and DIAGNOSTIC MONITORING TEST RESULTS (HO2S related) been recorded?	Yes	Go to the next step.
		No	Record the FREEZE FRAME DATA and DIAGNOSTIC MONITORING TEST RESULTS on the repair order, then go to the next step.
2	**VERIFY REPAIR INFORMATION AVAILABILITY** • Verify related service Bulletins and/or on-line repair information availability. • Is any related repair information available?	Yes	Perform repair or diagnosis according to the available repair information. If the vehicle is not repaired, go to the next step.
		No	Go to the next step.
3	**VERIFY RELATED PENDING CODE OR STORED DTC** • Turn the ignition switch off, then ON position (Engine off). • Verify the related PENDING CODE or stored DTCs. • Is the DTC P2195 present?	Yes	Go to the applicable DTC inspection. (See 01–02A–18 DTC TABLE [L3].)
		No	Go to the next step.
4	**IDENTIFY TRIGGER DTC FOR FREEZE FRAME DATA** • Is DTC P2270 on FREEZE FRAME DATA?	Yes	Go to the next step.
		No	Go to FREEZE FRAME DATA DTC inspection. (See 01–02A–18 DTC TABLE [L3].)
5	**VERIFY CURRENT INPUT SIGNAL STATUS OF THE MIDDLE HO2S** • Start the engine and warm it up completely. • Access O2S12 PID using the WDS or equivalent. • Check PID under following accelerator pedal condition (in PARK). • Is PID reading normal? — **More than 0.45V** when accelerator pedal is suddenly depressed (rich condition). — **Less than 0.45V** just after release of accelerator pedal (lean condition)	Yes	Go to the next step.
		No	Visually inspect for any gas leakage between the exhaust manifold and the middle HO2S. • If there is no leakage, replace the middle HO2S. (See 01–15A–2 EXHAUST SYSTEM REMOVAL/INSTALLATION [L3].) Then go to the next step.
6	**VERIFY TROUBLESHOOTING OF DTC P2270 COMPLETED** • Make sure to reconnect all disconnected connectors. • Clear the DTC from the PCM memory using the WDS or equivalent. • Stop the vehicle and access ON BOARD READINESS TEST to inspect drive mode completion status. • Verify O2S_EVAL PID changes to yes. — If not, perform the DRIVE MODE again. • Is the PENDING CODE for this DTC present?	Yes	Replace the PCM, then go to the next step. (See 01–40A–9 PCM REMOVAL/INSTALLATION [L3].)
		No	Go to the next step.
7	**VERIFY AFTER REPAIR PROCEDURE** • Perform "AFTER REPAIR PROCEDURE". (See 01–02A–12 AFTER REPAIR PROCEDURE [L3].) • Is any DTC present?	Yes	Go to the applicable DTC inspection. (See 01–02A–18 DTC TABLE [L3].)
		No	Troubleshooting completed.

DTC P2271 [L3]

E6U010202200W04

DTC P2271	Middle HO2S signal stuck rich
DETECTION CONDITION	• The PCM monitors the middle HO2S input voltage when the following conditions are met. If the subtracted input voltage from the target voltage (calculated by PCM) is **0.85 V or more** for **25 s**, or is **above 0.3 V**, the PCM determines that the front HO2S signal remains rich. **MONITORING CONDITION** — ECT: **more than 70 °C {158 °F}** — Engine speed: **more than 1,500 rpm** — MAF amount: **more than 10 g/s {1.32 lb/min}** — Short term fuel trim: **-20 — 20%** — Long term fuel trim: **-15 — 15%** — Fuel injection system status: feedback control **Diagnostic support note** • This is a intermittent monitor (HO2S). • MIL illuminates if PCM detects above malfunction condition in two consecutive drive cycles or in one drive cycle while DTC for the same malfunction has been stored in PCM. • PENDING CODE is available if PCM detects the above malfunction condition during first drive cycle. • FREEZE FRAME DATA is available. • DTC is stored in the PCM memory.
POSSIBLE CAUSE	• Leakage exhaust gas • Middle HO2S malfunction • Front HO2S malfunction • Front HO2S heater malfunction • Middle HO2S heater malfunction • Fuel pump control malfunction • Fuel pressure malfunction • Fuel injector malfunction • Leakage exhaust gas • Leakage engine coolant • Purge solenoid valve malfunction • Purge solenoid valve hoses improper connection • Restriction in intake-air system • Insufficient compression — Engine oil malfunction — Increased oil pressure — Metering oil pump malfunction — Metering oil pump control malfunction — Engine malfunction • PCM malfunction

Diagnostic procedure

STEP	INSPECTION		ACTION
1	**VERIFY FREEZE FRAME DATA AND DIAGNOSTIC MONITORING TEST RESULTS HAVE BEEN RECORDED** • Have FREEZE FRAME DATA and DIAGNOSTIC MONITORING TEST RESULTS (HO2S related) been recorded?	Yes	Go to the next step.
		No	Record the FREEZE FRAME DATA and DIAGNOSTIC MONITORING TEST RESULTS on the repair order, then go to the next step.
2	**VERIFY REPAIR INFORMATION AVAILABILITY** • Verify related service Bulletins and/or on-line repair information availability. • Is any related repair information available?	Yes	Perform repair or diagnosis according to the available repair information. If the vehicle is not repaired, go to the next step.
		No	Go to the applicable DTC inspection. (See 01–02A–18 DTC TABLE [L3].)
3	**VERIFY RELATED PENDING CODE OR STORED DTC** • Turn the ignition switch off, then to the ON position (Engine off). • Verify the related PENDING CODE or stored DTCs. • Is DTC P2196 present?	Yes	Go to the applicable DTC inspection. (See 01–02A–18 DTC TABLE [L3].)
		No	Go to the next step.
4	**IDENTIFY TRIGGER DTC FOR FREEZE FRAME DATA** • Is DTC P2271 on FREEZE FRAME DATA?	Yes	Go to the next step.
		No	Go to FREEZE FRAME DATA DTC inspection. (See 01–02A–18 DTC TABLE [L3].)
5	**VERIFY CURRENT INPUT SIGNAL STATUS OF MIDDLE HO2S** • Start the engine and warm it up completely. • Access O2S12 PID using the WDS or equivalent. • Check PID under following accelerator pedal condition (in PARK). • Is PID reading normal? — **More than 0.45 V** when accelerator pedal is suddenly depressed (rich condition). — **Less than 0.45 V** just after release of accelerator pedal (lean condition)	Yes	Go to the next step.
		No	Visually inspect for any gas leakage between the exhaust manifold and the middle HO2S. • If there is no leakage, replace the middle HO2S. (See 01–15A–2 EXHAUST SYSTEM REMOVAL/ INSTALLATION [L3].) Then go to the next step.
6	**VERIFY TROUBLESHOOTING OF DTC P2271 COMPLETED** • Make sure to reconnect all disconnected connectors. • Clear the DTC from the PCM memory using the WDS or equivalent. • Stop the vehicle and access ON BOARD READINESS TEST to inspect drive mode completion status. • Verify O2S_EVAL PID changes to yes. — If not, perform the DRIVE MODE again. • Is the PENDING CODE for this DTC present?	Yes	Replace the PCM, then go to the next step. (See 01–40A–9 PCM REMOVAL/INSTALLATION [L3].)
		No	Go to the next step.
7	**VERIFY AFTER REPAIR PROCEDURE** • Perform "AFTER REPAIR PROCEDURE". (See 01–02A–12 AFTER REPAIR PROCEDURE [L3].) • Is any DTC present?	Yes	Go to the applicable DTC inspection. (See 01–02A–18 DTC TABLE [L3].)
		No	Troubleshooting completed.

DTC P2274 [L3]

E6U010202200W05

DTC P2274	Rear HO2S signal stuck lean
DETECTION CONDITION	• The PCM monitors the rear HO2S input voltage when the following conditions are met. If the subtracted input voltage from the target voltage (calculated by PCM) is **below 0.17 V** even after recovery from fuel cut, the PCM determines that the front HO2S signal remains lean. **Diagnostic support note** • This is an intermittent monitor (HO2S). • MIL illuminates if PCM detects above malfunction condition in two consecutive drive cycles or in one drive cycle while DTC for the same malfunction has been stored in PCM. • PENDING CODE is available if PCM detects the above malfunction condition during first drive cycle. • FREEZE FRAME DATA is available. • The DTC is stored in the PCM memory.
POSSIBLE CAUSE	• Leakage exhaust gas • Rear HO2S malfunction • Fuel injector malfunction • Leakage fuel • MAF sensor malfunction • ECT sensor malfunction • Air suction at intake-air system • PCM malfunction

Diagnostic procedure

STEP	INSPECTION		ACTION
1	**VERIFY FREEZE FRAME DATA AND DIAGNOSTIC MONITORING TEST RESULTS HAVE BEEN RECORDED** • Have FREEZE FRAME DATA and DIAGNOSTIC MONITORING TEST RESULTS (HO2S related) been recorded?	Yes	Go to the next step.
		No	Record the FREEZE FRAME DATA and DIAGNOSTIC MONITORING TEST RESULTS on the repair order, then go to the next step.
2	**VERIFY RELATED REPAIR INFORMATION AVAILABILITY** • Verify related Service Bulletins and/or on-line repair information availability. • Is any related repair information available?	Yes	Perform repair or diagnosis according to the available repair information. • If the vehicle is not repaired, go to the next step.
		No	Go to the next step.
3	**VERIFY RELATED PENDING CODE OR STORED DTC** • Turn the ignition switch off, then to the ON position (Engine off). • Verify the related PENDING CODE or stored DTCs. • Are other DTCs present?	Yes	Go to the applicable DTC inspection. (See 01–02A–18 DTC TABLE [L3].)
		No	Go to the next step.
4	**IDENTIFY TRIGGER DTC FOR FREEZE FRAME DATA** • Is DTC P2274 on FREEZE FRAME DATA?	Yes	Go to the next step.
		No	Go to the FREEZE FRAME DATA DTC inspection. (See 01–02A–18 DTC TABLE [L3].)
5	**VERIFY CURRENT INPUT SIGNAL STATUS OF REAR HO2S** • Start the engine and warm it up completely. • Access O2S13 PID using the WDS or equivalent. • Check PID under following the accelerator pedal condition (in PARK). • Is PID reading normal? — **More than 0.45 V** when accelerator pedal is suddenly depressed (rich condition). — **Less than 0.45 V** just after release of the accelerator pedal (lean condition)	Yes	Go to the next step.
		No	Visually inspect for any gas leakage between the TWC and the rear HO2S. • If there is no leakage, replace the rear HO2S. (See 01–15A–2 EXHAUST SYSTEM REMOVAL/ INSTALLATION [L3].) Then go to Step 10.
6	**INSPECT THE FUEL LINE PRESSURE** • Perform the "FUEL LINE PRESSURE INSPECTION". (See 01–14A–7 FUEL LINE PRESSURE INSPECTION [L3, AJ].) • Is there any malfunction?	Yes	Inspect the malfunctioning part according to the inspection results. Then go to the next step.
		No	Go to the next step.

STEP	INSPECTION		ACTION
7	**INSPECT THE PURGE SOLENOID VALVE** • Inspect the purge solenoid valve. (See 01–16A–13 PURGE SOLENOID VALVE INSPECTION [L3, AJ].) • Is there any malfunction?	Yes	Replace the purge solenoid valve, then go to Step 10.
		No	Go to the next step.
8	**INSPECT THE FUEL INJECTOR** • Inspect the fuel injector. (See 01–14A–29 FUEL INJECTOR INSPECTION [L3].) • Is there any malfunction?	Yes	Replace the fuel injector, then go to Step 10. (See 01–14A–24 FUEL INJECTOR REMOVAL/INSTALLATION [L3].)
		No	Go to the next step.
9	**INSPECT THE ENGINE COOLANT PASSAGE FOR THE ENGINE COOLANT LEAKAGE** • Perform the engine coolant leakage inspection. (See 01–12A–7 ENGINE COOLANT LEAKAGE INSPECTION [L3, AJ].) • Is there any malfunction?	Yes	Repair or replace the malfunctioning part according to the inspection results. Then go to the next step.
		No	Go to the next step.
10	**VERIFY TROUBLESHOOTING OF THE DTC P2274 COMPLETED** • Make sure to reconnect all disconnected connectors. • Clear the DTC from the PCM memory using the WDS or equivalent. • Stop the vehicle and access ON BOARD READINESS TEST to inspect drive mode completion status. • Verify O2S_EVAL PID changes to yes. — If not, perform the DRIVE MODE again. • Is the PENDING CODE for this DTC present?	Yes	Replace the PCM, then go to the next step. (See 01–40A–9 PCM REMOVAL/INSTALLATION [L3].)
		No	Go to the next step.
11	**VERIFY AFTER REPAIR PROCEDURE** • Perform the "AFTER REPAIR PROCEDURE". (See 01–02A–12 AFTER REPAIR PROCEDURE [L3].) • Is any DTC present?	Yes	Go to the applicable DTC inspection. (See 01–02A–18 DTC TABLE [L3].)
		No	Troubleshooting completed.

DTC P2275 [L3]

E6U010202200W06

DTC P2275	Rear HO2S signal stuck rich
DETECTION CONDITION	• The PCM monitors the rear HO2S input voltage when the following conditions are met. If the subtracted input voltage from the target voltage (calculated by PCM) is **above 0.17 V** when the fuel cut, the PCM determines that the front HO2S signal remains rich. **Diagnostic support note** • This is an intermittent monitor (HO2S). • MIL illuminates if PCM detects above malfunction condition in two consecutive drive cycles or in one drive cycle while DTC for the same malfunction has been stored in PCM. • PENDING CODE is available if PCM detects the above malfunction condition during first drive cycle. • FREEZE FRAME DATA is available. • DTC is stored in the PCM memory.
POSSIBLE CAUSE	• Rear HO2S malfunction • Rear HO2S heater malfunction • Pressure regulator malfunction (built-in fuel pump unit) • Fuel injector malfunction • Leakage exhaust gas • Purge solenoid valve malfunction • Purge solenoid valve hoses improper connection • Insufficient engine compression • Engine malfunction (leakage engine coolant) • Restriction in intake-air system • MAF sensor malfunction • ECT sensor malfunction • PCM malfunction

Diagnostic procedure

STEP	INSPECTION		ACTION
1	**VERIFY FREEZE FRAME DATA AND DIAGNOSTIC MONITORING TEST RESULTS HAVE BEEN RECORDED** • Have FREEZE FRAME DATA and DIAGNOSTIC MONITORING TEST RESULTS (HO2S related) been recorded?	Yes	Go to the next step.
		No	Record the FREEZE FRAME DATA and DIAGNOSTIC MONITORING TEST RESULTS on the repair order, then go to the next step.
2	**VERIFY REPAIR INFORMATION AVAILABILITY** • Verify related service Bulletins and/or on-line repair information availability. • Is any related repair information available?	Yes	Perform repair or diagnosis according to the available repair information. If the vehicle is not repaired, go to the next step.
		No	Go to the applicable DTC inspection. (See 01–02A–18 DTC TABLE [L3].)
3	**VERIFY RELATED PENDING CODE OR STORED DTC** • Turn the ignition switch off, then to the ON position (Engine off). • Verify the related PENDING CODE or stored DTCs. • Are there any DTCs present?	Yes	Go to the applicable DTC inspection. (See 01–02A–18 DTC TABLE [L3].)
		No	Go to the next step.
4	**IDENTIFY TRIGGER DTC FOR FREEZE FRAME DATA** • Is DTC P2275 on FREEZE FRAME DATA?	Yes	Go to the next step.
		No	Go to FREEZE FRAME DATA DTC inspection. (See 01–02A–18 DTC TABLE [L3].)
5	**VERIFY CURRENT INPUT SIGNAL STATUS OF THE REAR HO2S** • Start engine and warm it up completely. • Access O2S13 PID using the WDS or equivalent. • Check PID under following the accelerator pedal condition (in PARK). • Is PID reading normal? — **More than 0.45 V** when accelerator pedal is suddenly depressed (rich condition). — **Less than 0.45 V** just after release of accelerator pedal (lean condition)	Yes	Go to the next step.
		No	Visually inspect for any gas leakage between the TWC and the rear HO2S. • If there is no leakage, replace rear HO2S. (See 01–15A–2 EXHAUST SYSTEM REMOVAL/ INSTALLATION [L3].) Then go to Step 11.
6	**INSPECT THE PURGE SOLENOID VALVE** • Inspect the purge solenoid valve. (See 01–16A–13 PURGE SOLENOID VALVE INSPECTION [L3, AJ].) • Is there any malfunction?	Yes	Replace the purge solenoid valve, then go to Step 11.
		No	Go to the next step.

STEP	INSPECTION		ACTION
7	**INSPECT THE FUEL LINE PRESSURE** • Perform the "FUEL LINE PRESSURE INSPECTION". (See 01–14A–7 FUEL LINE PRESSURE INSPECTION [L3, AJ].) • Is there any malfunction?	Yes	Go to the next step.
		No	Go to Step 9.
8	**INSPECT THE FUEL SYSTEM FOR FUEL LEAKAGE** • Visually inspect fuel leakage in the fuel system. • Is there fuel leakage?	Yes	Repair or replace malfunctioning part, then go to Step 11.
		No	Replace fuel pump, then go to Step 11.
9	**INSPECT THE FUEL INJECTOR** • Inspect fuel injector. (See 01–14A–29 FUEL INJECTOR INSPECTION [L3].) • Is there any malfunction?	Yes	Replace the fuel injector, then go to Step11. (See 01–14A–24 FUEL INJECTOR REMOVAL/ INSTALLATION [L3].)
		No	Go to the next step.
10	**INSPECT THE ENGINE COOLANT PASSAGE FOR ENGINE COOLANT LEAKAGE** • Perform the engine coolant leakage inspection. (See 01–12A–7 ENGINE COOLANT LEAKAGE INSPECTION [L3, AJ].) • Is there any malfunction?	Yes	Repair or replace the malfunctioning part according to the inspection results. Then go to the next step.
		No	Go to the next step.
11	**VERIFY TROUBLESHOOTING OF DTC P2275 COMPLETED** • Make sure to reconnect all disconnected connectors. • Clear the DTC from the PCM memory using the WDS or equivalent. • Stop vehicle and access ON BOARD READINESS TEST to inspect drive mode completion status. • Verify O2S_EVAL PID changes to yes. — If not, perform the DRIVE MODE again. • Is the PENDING CODE for this DTC present?	Yes	Replace the PCM, then go to the next step. (See 01–40A–9 PCM REMOVAL/INSTALLATION [L3].)
		No	Go to the next step.
12	**VERIFY AFTER REPAIR PROCEDURE** • Perform the "AFTER REPAIR PROCEDURE". (See 01–02A–12 AFTER REPAIR PROCEDURE [L3].) • Are any DTCs present?	Yes	Go to the applicable DTC inspection. (See 01–02A–18 DTC TABLE [L3].)
		No	Troubleshooting completed.

DTC P2401 [L3]

E6U010202400W01

DTC P2401	EVAP system leak detection pump motor circuit low
DETECTION CONDITION	• The PCM monitors pump load current (EVAP line pressure), while EVAP leak monitor is operating. If the pump load current is lower than specified, the PCM determines EVAP system leak detection pump motor circuit has a malfunction. **Diagnostic support note** • This is a intermittent monitor (CCM). • MIL illuminates if PCM detects above malfunction condition in two consecutive drive cycles or in one drive cycle while DTC for the same malfunction has been stored in PCM. • PENDING CODE is available if PCM detects the above malfunction condition during first drive cycle. • FREEZE FRAME DATA is available. • DTC is stored in PCM memory.
POSSIBLE CAUSE	• EVAP system leak detection pump malfunction • Open circuit between main relay terminal E and EVAP system leak detection pump terminal A • Open circuit between EVAP system leak detection pump terminal D and PCM terminal 1U • Short to ground circuit between EVAP system leak detection pump terminal D and PCM terminal 1U • Poor connection at EVAP system leak detection pump or PCM connector • PCM malfunction

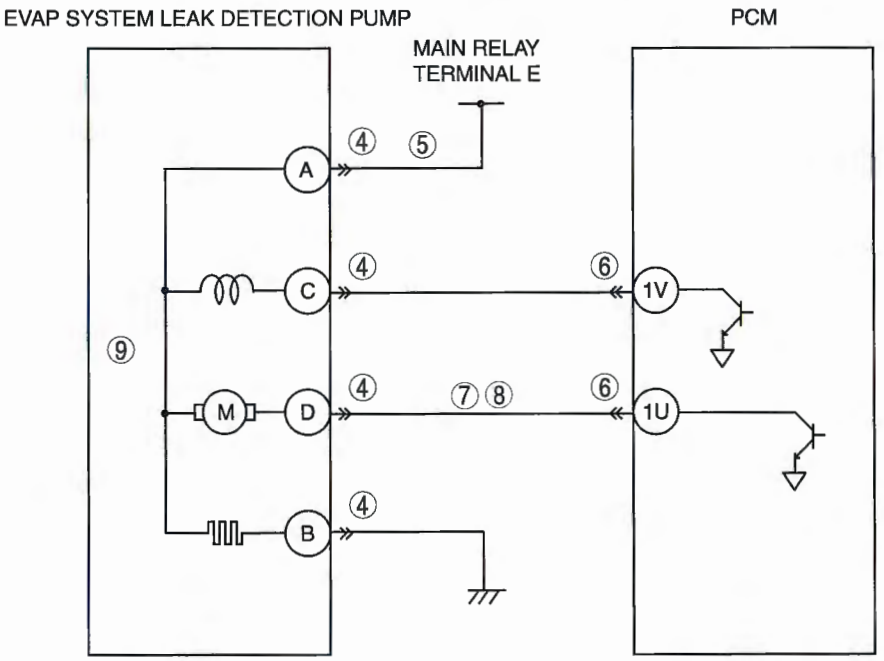

EVAP SYSTEM LEAK DETECTION PUMP
HARNESS SIDE CONNECTOR

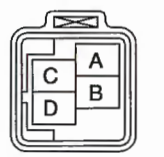

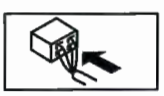

PCM
WIRING HARNESS-SIDE CONNECTOR

1BE	1BA	1AW	1AS	1AO	1AK	1AG	1AC	1Y	1U	1Q	1M	1I	1E	1A
1BF	1BB	1AX	1AT	1AP	1AL	1AH	1AD	1Z	1V	1R	1N	1J	1F	1B
1BG	1BC	1AY	1AU	1AQ	1AM	1AI	1AE	1AA	1W	1S	1O	1K	1G	1C
1BH	1BD	1AZ	1AV	1AR	1AN	1AJ	1AF	1AB	1X	1T	1P	1L	1H	1D



Diagnostic procedure

STEP	INSPECTION		ACTION
1	**VERIFY FREEZE FRAME DATA HAS BEEN RECORDED** • Has FREEZE FRAME DATA been recorded?	Yes	Go to the next step.
		No	Record FREEZE FRAME DATA on repair order, then go to the next step.
2	**VERIFY RELATED REPAIR INFORMATION AVAILABILITY** • Check for related Service Bulletins and/or on-line repair information availability. • Is any related repair information available?	Yes	Perform repair or diagnosis according to the available repair information. • If the vehicle is not repaired, go to the next step.
		No	Go to the next step.
3	**VERIFY RELATED PENDING CODE OR STORED DTC** • Turn ignition switch to OFF then ON (Engine off). • Verify related PENDING CODE or stored DTC. • Is DTC P2405 present?	Yes	Go to appropriate DTC inspection. (See 01–02A–283 DTC P2405 [L3].)
		No	Go to the next step.
4	**INSPECT EVAP SYSTEM LEAK DETECTION PUMP CONNECTOR FOR POOR CONNECTION** • Turn the ignition switch off. • Disconnect EVAP system leak detection pump connector. • Inspect for poor connection (such as damaged/pulled-out pins, corrosion). • Is there any malfunction?	Yes	Repair or replace the terminal, then go to Step 10.
		No	Go to the next step.
5	**INSPECT EVAP SYSTEM LEAK DETECTION PUMP MOTOR CIRCUIT FOR OPEN CIRCUIT** • Disconnect main relay. • Inspect continuity between EVAP system leak detection pump terminal A (wiring harness-side) and main relay terminal E (wiring harness-side). • Is there continuity?	Yes	Go to the next step.
		No	Repair or replace harness for open circuit, then go to Step 10.
6	**INSPECT PCM CONNECTOR FOR POOR CONNECTION** • Turn the ignition switch off. • Disconnect PCM connector. • Inspect for poor connection (such as damaged/pulled-out pins, corrosion). • Is there any malfunction?	Yes	Repair terminal, then go to Step 10.
		No	Go to the next step.
7	**INSPECT EVAP SYSTEM LEAK DETECTION PUMP MOTOR CIRCUIT FOR SHORT TO GROUND** • Inspect continuity between EVAP system leak detection pump terminal D (wiring harness-side) and body ground. • Is there continuity?	Yes	Repair or replace harness for short to ground, then go to Step 10.
		No	Go to the next step.
8	**INSPECT EVAP SYSTEM LEAK DETECTION PUMP MOTOR CIRCUIT FOR OPEN CIRCUIT** • Inspect continuity between EVAP system leak detection pump terminal D (wiring harness-side) and PCM terminal 1U (wiring harness-side). • Is there continuity?	Yes	Go to the next step.
		No	Repair or replace harness for open circuit, then go to Step 10.
9	**INSPECT EVAP SYSTEM LEAK DETECTION PUMP** • Perform EVAP system leak detection pump inspection. (See 01–16A–11 EVAPORATIVE EMISSION (EVAP) SYSTEM LEAK DETECTION PUMP INSPECTION [L3, AJ].) • Is EVAP system leak detection pump normal?	Yes	Go to the next step.
		No	Replace EVAP system leak detection pump, then go to the next step.

STEP	INSPECTION		ACTION
10	**VERIFY TROUBLESHOOTING OF DTC P2401 COMPLETED** • Make sure to reconnect all disconnected connectors. • Clear the DTC from the PCM memory using the WDS or equivalent. • Perform EVAP system test using the WDS or equivalent. (See 01–03A–72 Evaporative Emission (EVAP) System Leak Inspection.) • Is same DTC present? **Note** • If EVAP system test function is not available, take following procedure. — Start engine and perform "EVAP System Repair Verification Drive Mode". (See 01–02A–13 OBD-II DRIVE MODE [L3].) — Is PENDING CODE for this DTC present?	Yes	Replace PCM, then go to the next step.
		No	Go to the next step.
11	**VERIFY AFTER REPAIR PROCEDURE** • Perform the "After Repair Procedure". (See 01–02A–12 AFTER REPAIR PROCEDURE [L3].) • Is any DTC present?	Yes	Go to the applicable DTC inspection. (See 01–02A–18 DTC TABLE [L3].)
		No	Troubleshooting completed.

DTC P2402 [L3]

E6U010202400W02

DTC P2402	EVAP system leak detection pump motor circuit high
DETECTION CONDITION	• The PCM monitors pump load current (EVAP line pressure), while EVAP leak monitor is operating. If the pump load current is higher than specified, the PCM determines EVAP system leak detection pump motc circuit has a malfunction. **Diagnostic support note** • This is a intermittent monitor (CCM). • MIL illuminates if PCM detects above malfunction condition in two consecutive drive cycles or in one drive cycle while DTC for the same malfunction has been stored in PCM. • PENDING CODE is available if PCM detects the above malfunction condition during first drive cycle. • FREEZE FRAME DATA is available. • DTC is stored in PCM memory.
POSSIBLE CAUSE	• EVAP system leak detection pump malfunction • Short to power supply between the EVAP system leak detection pump terminal D and PCM terminal 1U • PCM malfunction

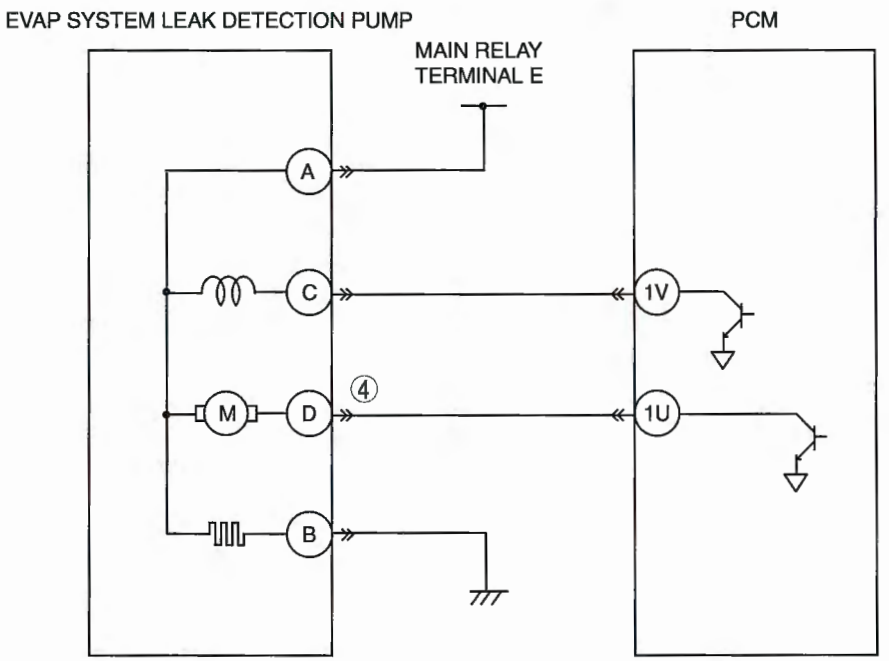

EVAP SYSTEM LEAK DETECTION PUMP
HARNESS SIDE CONNECTOR

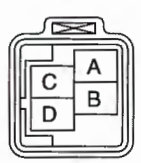

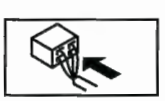

PCM
WIRING HARNESS-SIDE CONNECTOR

1BE	1BA	1AW	1AS	1AO	1AK	1AG	1AC	1Y	1U	1Q	1M	1I	1E	1A
1BF	1BB	1AX	1AT	1AP	1AL	1AH	1AD	1Z	1V	1R	1N	1J	1F	1B
1BG	1BC	1AY	1AU	1AQ	1AM	1AI	1AE	1AA	1W	1S	1O	1K	1G	1C
1BH	1BD	1AZ	1AV	1AR	1AN	1AJ	1AF	1AB	1X	1T	1P	1L	1H	1D

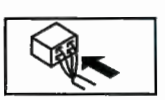

Diagnostic procedure

STEP	INSPECTION		ACTION
1	**VERIFY FREEZE FRAME DATA HAS BEEN RECORDED** • Has FREEZE FRAME DATA been recorded?	Yes	Go to the next step.
		No	Record FREEZE FRAME DATA on repair order, then go to the next step.
2	**VERIFY RELATED REPAIR INFORMATION AVAILABILITY** • Check for related Service Bulletins and/or on-line repair information availability. • Is any related repair information available?	Yes	Perform repair or diagnostic according to the available repair information. • If the vehicle is not repaired, then go to the next step.
		No	Go to the next step.
3	**VERIFY RELATED PENDING CODE OR STORED DTCS** • Turn ignition switch to OFF then ON (Engine off). • Verify related pending code or stored DTCs. • Are other DTCs present?	Yes	Go to appropriate DTC inspection. (See 01–02A–18 DTC TABLE [L3].)
		No	Go to the next step.
4	**CHECK EVAP SYSTEM LEAK DETECTION PUMP CIRCUIT FOR SHORT TO POWER SUPPLY** • Turn ignition switch to ON. • Disconnect EVAP system leak detection pump connector. • Measure voltage between EVAP system leak detection pump terminal D (wiring harness-side) and body ground. • Is voltage **B+**?	Yes	Repair or replace wiring harness, then go to the next step.
		No	Go to the next step.
5	**VERIFY TROUBLESHOOTING OF DTC P2402 COMPLETED** • Make sure to reconnect all disconnected connectors. • Clear the DTC from the PCM memory using the WDS or equivalent. • Perform EVAP system test using the WDS or equivalent. (See 01–03A–72 Evaporative Emission (EVAP) System Leak Inspection.) • Is the same DTC present? **Note** • If EVAP system test function is not available, take following procedure. — Start engine and perform "EVAP System Repair Verification Drive Mode". (See 01–02A–13 OBD-II DRIVE MODE [L3].) — Is PENDING CODE for this DTC present?	Yes	Replace PCM, then go to the next step.
		No	Go to the next step.
6	**VERIFY AFTER REPAIR PROCEDURE** • Perform the "After Repair Procedure". (See 01–02A–12 AFTER REPAIR PROCEDURE [L3].) • Is any DTC present?	Yes	Go to the applicable DTC inspection. (See 01–02A–18 DTC TABLE [L3].)
		No	Troubleshooting completed.

DTC P2404 [L3]

E6U010202400W03

DTC P2404	EVAP system leak detection pump sensor circuit malfunction
DETECTION CONDITION	• The PCM monitors pump load current (EVAP line pressure), while EVAP leak monitor is operating. After obtaining the reference current value, if the time in which the pump load current reaches the reference current value is less than the specification, the PCM determines air filter has a malfunction. **Diagnostic support note** • This is a intermittent monitor (CCM). • MIL illuminates if PCM detects above malfunction condition in two consecutive drive cycles or in one drive cycle while DTC for the same malfunction has been stored in PCM. • PENDING CODE is available if PCM detects the above malfunction condition during first drive cycle. • FREEZE FRAME DATA is available. • DTC is stored in PCM memory.
POSSIBLE CAUSE	• Air filter clogging • EVAP hose bending • Damaged PCM

Diagnostic procedure

STEP	INSPECTION		ACTION
1	**VERIFY FREEZE FRAME DATA HAS BEEN RECORDED** • Has FREEZE FRAME DATA been recorded?	Yes	Go to the next step.
		No	Record FREEZE FRAME DATA on repair order, then go to the next step.
2	**VERIFY RELATED REPAIR INFORMATION AVAILABILITY** • Check for related Service Bulletins and/or on-line repair information availability. • Is any related repair information available?	Yes	Perform repair or diagnostic according to the available repair information. • If the vehicle is not repaired, then go to the next step.
		No	Go to the next step.
3	**CHECK EVAP HOSE BENDING** • Inspect EVAP hose for bending. • Is EVAP hose normal?	Yes	Go to the next step.
		No	Repair or replace suspected hose, then go to Step 5.
4	**CHECK AIR FILTER FOR CLOGGING** • Inspect air filter for clogging. • Is air filter normal?	Yes	Go to the next step.
		No	Replace air filter, then go to the next step.
5	**VERIFY TROUBLESHOOTING OF DTC P2404 COMPLETED** • Make sure to reconnect all disconnected connectors. • Clear the DTC from the PCM memory using the WDS or equivalent. • Perform EVAP system test using the WDS or equivalent. (See 01–03A–72 Evaporative Emission (EVAP) System Leak Inspection.) • Is the same DTC present? **Note** • If EVAP system test function is not available, take following procedure. — Perform "EVAP System Repair Verification Drive Mode". (See 01–02A–13 OBD-II DRIVE MODE [L3].) — Is PENDING CODE for this DTC present?	Yes	Replace PCM, then go to the next step.
		No	Go to the next step.
6	**VERIFY AFTER REPAIR PROCEDURE** • Perform the "After Repair Procedure". (See 01–02A–12 AFTER REPAIR PROCEDURE [L3].) • Is any DTC present?	Yes	Go to the applicable DTC inspection. (See 01–02A–18 DTC TABLE [L3].)
		No	Troubleshooting completed.

DTC P2405 [L3]

E6U010202400W04

DTC P2405	EVAP system leak detection pump sensor circuit low input
DETECTION CONDITION	• The PCM monitors pump load current (EVAP line pressure), while EVAP leak monitor is operating. If the current is lower than the specification while the PCM obtains the reference current value, the PCM determines EVAP system leak detection pump orifice has a malfunction. **Diagnostic support note** • This is a intermittent monitor (CCM). • MIL illuminates if PCM detects above malfunction condition in two consecutive drive cycles or in one drive cycle while DTC for the same malfunction has been stored in PCM. • PENDING CODE is available if PCM detects the above malfunction condition during first drive cycle. • FREEZE FRAME DATA is available. • DTC is stored in PCM memory.
POSSIBLE CAUSE	• EVAP system leak detection pump orifice fallen off • EVAP system leak detection pump motor malfunction • PCM malfunction

Diagnostic procedure

STEP	INSPECTION		ACTION
1	**VERIFY FREEZE FRAME DATA HAS BEEN RECORDED** • Has FREEZE FRAME DATA been recorded?	Yes	Go to the next step.
		No	Record FREEZE FRAME DATA on repair order, then go to the next step.
2	**VERIFY RELATED REPAIR INFORMATION AVAILABILITY** • Check for related Service Bulletins and/or on-line repair information availability. • Is any related repair information available?	Yes	Perform repair or diagnosis according to the available repair information. • If the vehicle is not repaired, go to the next step.
		No	Replace EVAP system leak detection pump, then go to the next step.
3	**VERIFY TROUBLESHOOTING OF DTC P2405 COMPLETED** • Make sure to reconnect all disconnected connectors. • Clear the DTC from the PCM memory using the WDS or equivalent. • Perform EVAP system test using the WDS or equivalent. (See 01–03A–72 Evaporative Emission (EVAP) System Leak Inspection.) • Is the same DTC present? **Note** • If EVAP system test function is not available, take following procedure. — Start engine and perform "EVAP System Repair Verification Drive Mode". (See 01–02A–13 OBD-II DRIVE MODE [L3].) — Is PENDING CODE for this DTC present?	Yes	Replace PCM, then go to the next step.
		No	Go to the next step.
4	**VERIFY AFTER REPAIR PROCEDURE** • Perform the "After Repair Procedure". (See 01–02A–12 AFTER REPAIR PROCEDURE [L3].) • Is any DTC present?	Yes	Go to the applicable DTC inspection. (See 01–02A–18 DTC TABLE [L3].)
		No	Troubleshooting completed.

DTC P2407 [L3]

E6U010202400W05

DTC P2407	EVAP system leak detection pump sensor circuit intermittent
DETECTION CONDITION	• The PCM monitors pump load current (EVAP line pressure), while EVAP leak monitor is operating. When either of the following is detected **6 times or more** successively, the PCM determines EVAP system leak detection pump heater has a malfunction: — While obtaining the reference current value, the change in pump load current exceeds the specification. — After obtaining the reference current value, the pump load current is kept lower than the maximum pump load current for more than the specified time. **Diagnostic support note** • This is a intermittent monitor (CCM). • MIL illuminates if PCM detects above malfunction condition in two consecutive drive cycles or in one drive cycle while DTC for the same malfunction has been stored in PCM. • PENDING CODE is available if PCM detects the above malfunction condition during first drive cycle. • FREEZE FRAME DATA is available. • DTC is stored in PCM memory.
POSSIBLE CAUSE	• EVAP system leak detection pump heater malfunction • PCM malfunction

Diagnostic procedure

STEP	INSPECTION		ACTION
1	**VERIFY FREEZE FRAME DATA HAS BEEN RECORDED** • Has FREEZE FRAME DATA been recorded?	Yes	Go to the next step.
		No	Record FREEZE FRAME DATA on repair order, then go to the next step.
2	**VERIFY RELATED REPAIR INFORMATION AVAILABILITY** • Check for related Service Bulletins and/or on-line repair information availability. • Is any related repair information available?	Yes	Perform repair or diagnosis according to the available repair information. • If the vehicle is not repaired, go to the next step.
		No	Go to the next step.
3	**INSPECT EVAP SYSTEM LEAK DETECTION PUMP HEATER** • Perform EVAP system leak detection pump inspection. (See 01–16A–11 EVAPORATIVE EMISSION (EVAP) SYSTEM LEAK DETECTION PUMP INSPECTION [L3, AJ]) • Is the EVAP system leak detection pump normal?	Yes	Replace the EVAP system leak detection pump, then go to the next step.
		No	Go to the next step.
4	**VERIFY TROUBLESHOOTING OF DTC P2407 COMPLETED** • Make sure to reconnect all disconnected connectors. • Clear the DTC from the PCM memory using the WDS or equivalent. • Perform EVAP system test using the WDS or equivalent. (See 01–03A–72 Evaporative Emission (EVAP) System Leak Inspection.) • Is same DTC present? **Note** • If EVAP system test function is not available, take following procedure. — Start the engine and perform "EVAP System Repair Verification Drive Mode". (See 01–02A–13 OBD-II DRIVE MODE [L3].) — Is the PENDING CODE for this DTC present?	Yes	Replace the PCM, then go to the next step.
		No	Go to the next step.
5	**VERIFY AFTER REPAIR PROCEDURE** • Perform "AFTER REPAIR PROCEDURE". (See 01–02A–12 AFTER REPAIR PROCEDURE [L3].) • Are any DTCs present?	Yes	Go to the applicable DTC inspection. (See 01–02A–18 DTC TABLE [L3].)
		No	Troubleshooting completed.

DTC P2502 [L3]

E6U010202500W01

DTC P2502	Generator terminal B circuit open
DETECTION CONDITION	• PCM judges generator output voltage is **above 17 V** or battery voltage is **below 11 V** during engine running. **Diagnostic support note** • This is a continuous monitor (Other). • MIL does not illuminate. • PENDING CODE is available if PCM detects the above malfunction condition. • FREEZE FRAME DATA is not available. • DTC is stored in the PCM memory.
POSSIBLE CAUSE	• Open circuit between generator terminal B and battery positive terminal • Battery malfunction • Generator malfunction • PCM is poorly connected. • PCM, generator and/or battery are poorly connected.

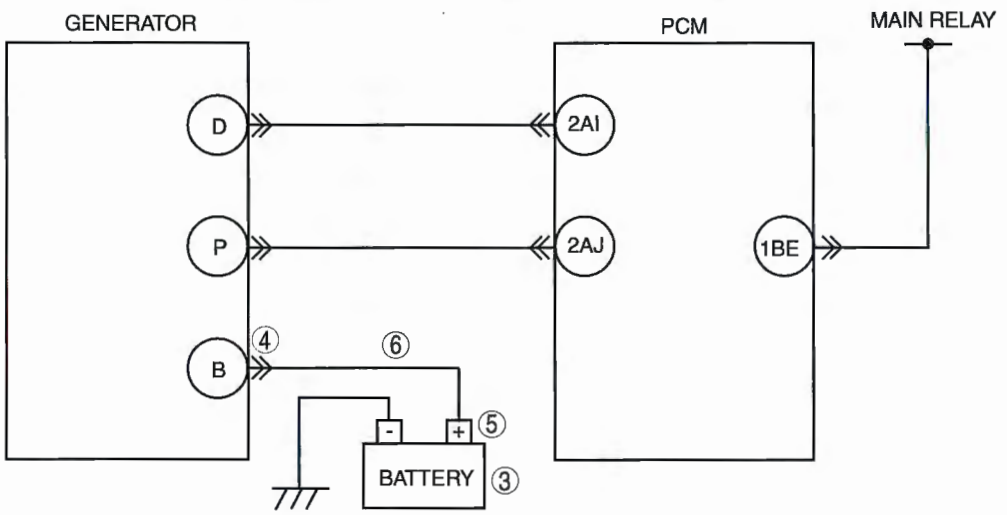

GENERATOR
HARNESS SIDE CONNECTOR



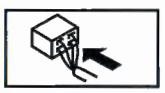

PCM
WIRING HARNESS-SIDE CONNECTOR

1BE	1BA	1AW	1AS	1AO	1AK	1AG	1AC	1Y	1U	1Q	1M	1I	1E	1A
1BF	1BB	1AX	1AT	1AP	1AL	1AH	1AD	1Z	1V	1R	1N	1J	1F	1B
1BG	1BC	1AY	1AU	1AQ	1AM	1AI	1AE	1AA	1W	1S	1O	1K	1G	1C
1BH	1BD	1AZ	1AV	1AR	1AN	1AJ	1AF	1AB	1X	1T	1P	1L	1H	1D

2BE	2BA	2AW	2AS	2AO	2AK	2AG	2AC	2Y	2U	2Q	2M	2I	2E	2A
2BF	2BB	2AX	2AT	2AP	2AL	2AH	2AD	2Z	2V	2R	2N	2J	2F	2B
2BG	2BC	2AY	2AU	2AQ	2AM	2AI	2AE	2AA	2W	2S	2O	2K	2G	2C
2BH	2BD	2AZ	2AV	2AR	2AN	2AJ	2AF	2AB	2X	2T	2P	2L	2H	2D

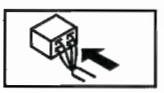

Diagnostic procedure

STEP	INSPECTION		ACTION
1	**VERIFY FREEZE FRAME DATA HAS BEEN RECORDED** • Has FREEZE FRAME DATA been recorded?	Yes	Go to the next step.
		No	Record FREEZE FRAME DATA on repair order, then go to the next step.
2	**VERIFY RELATED REPAIR INFORMATION AVAILABILITY** • Check for related Service Bulletins and/or on-line repair information availability. • Is any related repair information available?	Yes	Perform repair or diagnosis according to the available repair information. • If the vehicle is not repaired, then go to the next step.
		No	Go to the next step.
3	**INSPECT BATTERY** • Turn the ignition switch off. • Inspect battery. • Is battery normal?	Yes	Replace battery, then go to Step 7.
		No	Go to the next step.
4	**INSPECT POOR INSTALLATION OF GENERATOR TERMINAL** • Turn the ignition switch off. • Inspect generator terminal B installation nut for looseness. • Is nut loose?	Yes	Tighten generator terminal B installation nut, then go to Step 7.
		No	Go to the next step.
5	**INSPECT POOR INSTALLATION OF BATTERY POSITIVE TERMINAL** • Inspect battery positive terminal for looseness. • Is terminal loose?	Yes	Connect battery positive terminal correctly, then go to Step 7.
		No	Go to the next step.
6	**INSPECT BATTERY CHARGING CIRCUIT** • Start engine. • Disconnect battery positive terminal. • Does engine stall?	Yes	Repair or replace harness between generator terminal B and battery positive terminal, then go to the next step.
		No	Go to the next step.
7	**VERIFY TROUBLESHOOTING OF DTC P2502 COMPLETED** • Make sure to reconnect all connectors. • Clear the DTC from the memory using the WDS or equivalent. • Turn ignition switch to OFF, then start engine. • Is same DTC present?	Yes	Replace PCM, then go to the next step. (See 01–40A–9 PCM REMOVAL/INSTALLATION [L3].)
		No	Go to the next step.
8	**VERIFY AFTER REPAIR PROCEDURE** • Perform the "After Repair Procedure". (See 01–02A–12 AFTER REPAIR PROCEDURE [L3].) • Is any DTC present?	Yes	Go to the applicable DTC inspection. (See 01–02A–18 DTC TABLE [L3].)
		No	Troubleshooting completed.

DTC P2503 [L3]

E6U010202500W02

DTC P2503	Generator output voltage signal no electricity
DETECTION CONDITION	• PCM needs **more than 20 A** from generator, and judges generator output voltage to be **below 8.5 V** during engine running. **Diagnostic support note** • This is a continuous monitor (Other). • MIL does not illuminate. • PENDING CODE is available if PCM detects the above malfunction condition. • FREEZE FRAME DATA is not available. • DTC is stored in the PCM memory.
POSSIBLE CAUSE	• Generator malfunction • PCM and/or generator are poorly connected. • Open and/or short to GND in wiring harness from between generator terminal P and PCM terminal 2AJ • Open and/or short to GND in wiring harness from between generator terminal D and PCM terminal 2AI • Drive belt misadjustment

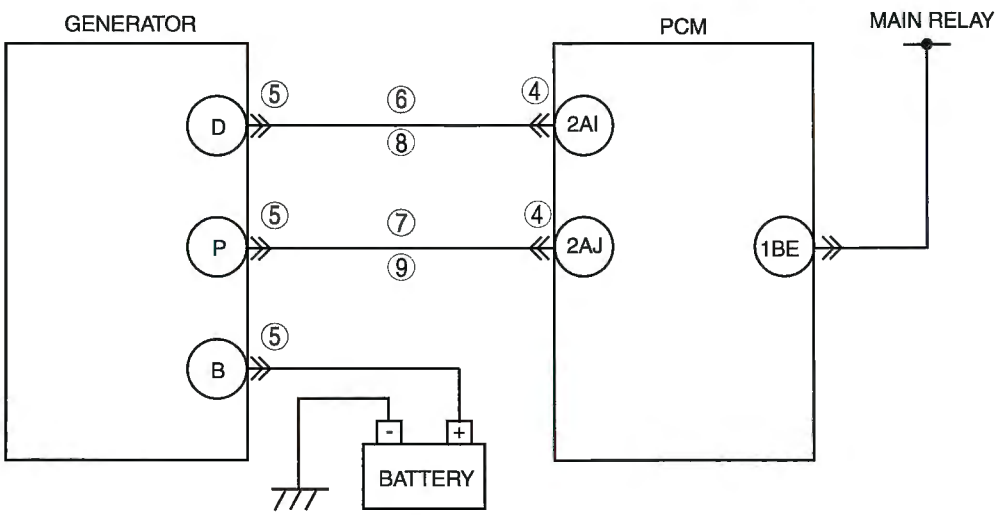

GENERATOR
HARNESS SIDE CONNECTOR

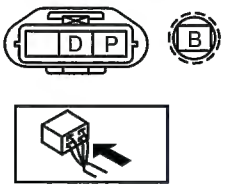

PCM
WIRING HARNESS-SIDE CONNECTOR

1BE	1BA	1AW	1AS	1AO	1AK	1AG	1AC	1Y	1U	1Q	1M	1I	1E	1A
1BF	1BB	1AX	1AT	1AP	1AL	1AH	1AD	1Z	1V	1R	1N	1J	1F	1B
1BG	1BC	1AY	1AU	1AQ	1AM	1AI	1AE	1AA	1W	1S	1O	1K	1G	1C
1BH	1BD	1AZ	1AV	1AR	1AN	1AJ	1AF	1AB	1X	1T	1P	1L	1H	1D

2BE	2BA	2AW	2AS	2AO	2AK	2AG	2AC	2Y	2U	2Q	2M	2I	2E	2A
2BF	2BB	2AX	2AT	2AP	2AL	2AH	2AD	2Z	2V	2R	2N	2J	2F	2B
2BG	2BC	2AY	2AU	2AQ	2AM	2AI	2AE	2AA	2W	2S	2O	2K	2G	2C
2BH	2BD	2AZ	2AV	2AR	2AN	2AJ	2AF	2AB	2X	2T	2P	2L	2H	2D

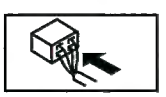

Diagnostic procedure

STEP	INSPECTION		ACTION
1	**VERIFY FREEZE FRAME DATA HAS BEEN RECORDED** • Has FREEZE FRAME DATA been recorded?	Yes	Go to the next step.
		No	Record FREEZE FRAME DATA on repair order, then go t the next step.
2	**VERIFY RELATED REPAIR INFORMATION AVAILABILITY** • Check for related Service Bulletins and/or on-line repair information availability. • Is any related repair information available?	Yes	Perform repair or diagnosis according to the available repair information. • If the vehicle is not repaired, then go to the next step.
		No	Go to the next step.
3	**INSPECT DRIVE BELT CONDITION** • Verify that drive belt auto tensioner indicator mark does not exceed limit. • Is front drive belt normal?	Yes	Go to the next step.
		No	Replace and/or adjust drive belt, then go to Step 10.
4	**INSPECT PCM CONNECTOR FOR POOR CONNECTION** • Turn the ignition switch off. • Disconnect PCM connector. • Inspect for poor connection (such as damaged/ pulled-out pins, corrosion). • Is there any malfunction?	Yes	Repair terminals, then go to Step 10.
		No	Go to the next step.
5	**INSPECT GENERATOR CONNECTOR FOR POOR CONNECTION** • Disconnect generator connector. • Inspect for poor connection (such as damaged/ pulled-out pins, corrosion). • Is there any malfunction?	Yes	Repair or replace terminals, then go to Step 10.
		No	Go to the next step.
6	**INSPECT GENERATOR CONTROL CIRCUIT FOR SHORT TO GROUND** • Inspect for continuity between generator terminal D (wiring harness-side) and body ground. • Is there continuity?	Yes	Repair or replace harness for short to ground, then go to Step 10.
		No	Go to the next step.
7	**INSPECT GENERATOR OUTPUT VOLTAGE MONITOR CIRCUIT FOR SHORT TO GROUND** • Inspect for continuity between generator terminal P (wiring harness-side) and body ground. • Is there continuity?	Yes	Repair or replace harness for short to ground, then go to Step 10.
		No	Go to the next step.
8	**INSPECT GENERATOR CONTROL CIRCUIT FOR OPEN CIRCUIT** • Measure resistance between generator terminal D (wiring harness-side) and PCM terminal 2AI (wiring harness-side). • Is there continuity?	Yes	Go to the next step.
		No	Repair or replace harness for open circuit, then go to Step 10.
9	**INSPECT GENERATOR OUTPUT VOLTAGE MONITOR CIRCUIT FOR OPEN CIRCUIT** • Measure resistance between generator terminal P (wiring harness-side) and PCM terminal 2AJ (wiring harness-side). • Is there continuity?	Yes	Repair or replace generator, then go to the next step.
		No	Repair or replace harness for open circuit, then go to the next step.
10	**VERIFY TROUBLESHOOTING OF DTC P2503 COMPLETED** • Make sure to reconnect all connectors. • Clear the DTC from the PCM memory using the WDS or equivalent. • Turn ignition switch to OFF, then start engine. • Is the same DTC present?	Yes	Replace PCM, then go to the next step. (See 01–40A–9 PCM REMOVAL/INSTALLATION [L3].)
		No	Go to the next step.
11	**VERIFY AFTER REPAIR PROCEDURE** • Perform the "After Repair Procedure". (See 01–02A–12 AFTER REPAIR PROCEDURE [L3].) • Is any DTC present?	Yes	Go to the applicable DTC inspection. (See 01–02A–18 DTC TABLE [L3].)
		No	Troubleshooting completed.

DTC P2504 [L3]

E6U010202500W03

DTC P2504	Battery overcharge
DETECTION CONDITION	• PCM judges generator output voltage is **above 18.5 V** or battery voltage is **above 16.0 V** during engine running. **Diagnostic support note** • This is a continuous monitor (Other). • MIL does not illuminate. • PENDING CODE is available if PCM detects the above malfunction condition. • FREEZE FRAME DATA is not available. • DTC is stored in the PCM memory.
POSSIBLE CAUSE	• Short to power supply between generator connector terminal D and PCM connector terminal 2AI • Generator malfunction • PCM and/or generator are poorly connected.

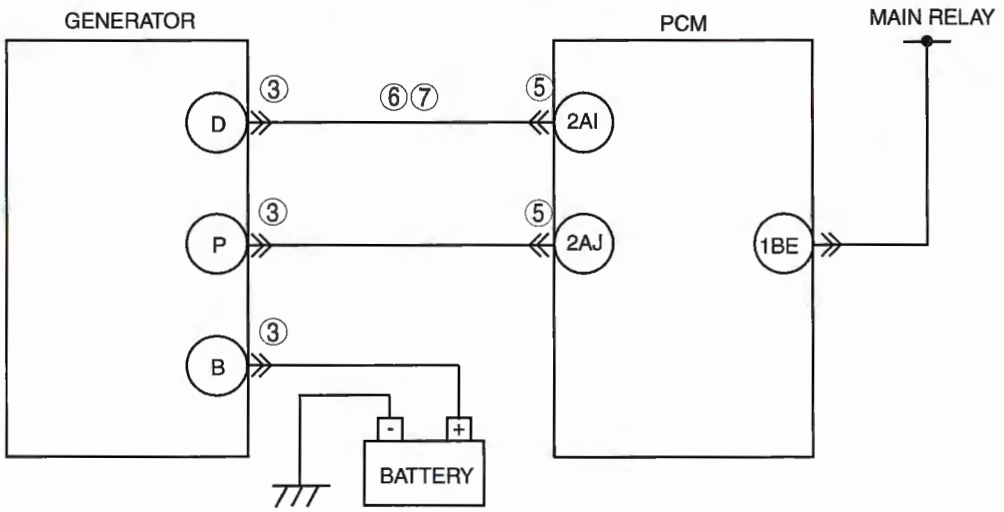

GENERATOR
HARNESS SIDE CONNECTOR

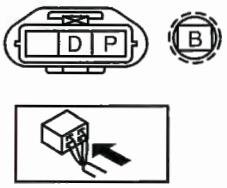

PCM
WIRING HARNESS-SIDE CONNECTOR

1BE	1BA	1AW	1AS	1AO	1AK	1AG	1AC	1Y	1U	1Q	1M	1I	1E	1A
1BF	1BB	1AX	1AT	1AP	1AL	1AH	1AD	1Z	1V	1R	1N	1J	1F	1B
1BG	1BC	1AY	1AU	1AQ	1AM	1AI	1AE	1AA	1W	1S	1O	1K	1G	1C
1BH	1BD	1AZ	1AV	1AR	1AN	1AJ	1AF	1AB	1X	1T	1P	1L	1H	1D

2BE	2BA	2AW	2AS	2AO	2AK	2AG	2AC	2Y	2U	2Q	2M	2I	2E	2A
2BF	2BB	2AX	2AT	2AP	2AL	2AH	2AD	2Z	2V	2R	2N	2J	2F	2B
2BG	2BC	2AY	2AU	2AQ	2AM	2AI	2AE	2AA	2W	2S	2O	2K	2G	2C
2BH	2BD	2AZ	2AV	2AR	2AN	2AJ	2AF	2AB	2X	2T	2P	2L	2H	2D

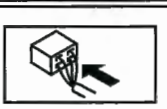

Diagnostic procedure

STEP	INSPECTION		ACTION
1	**VERIFY FREEZE FRAME DATA HAS BEEN RECORDED** • Has FREEZE FRAME DATA been recorded?	Yes	Go to the next step.
		No	Record FREEZE FRAME DATA on repair order, then go to the next step.
2	**VERIFY RELATED REPAIR INFORMATION AVAILABILITY** • Check for related Service Bulletins and/or on-line repair information availability. • Is any related repair information available?	Yes	Perform repair or diagnosis according to the available repair information. • If the vehicle is not repaired, then go to the next step.
		No	Go to the next step.
3	**INSPECT GENERATOR CONNECTOR FOR POOR CONNECTION** • Turn the ignition switch off. • Disconnect generator connector. • Inspect for poor connection (such as damaged/ pulled-out pins, corrosion). • Is there any malfunction?	Yes	Repair or replace terminals, then go to Step 8.
		No	Go to the next step.
4	**CLASSIFY GENERATOR MALFUNCTION OR OTHER MALFUNCTION** • Turn ignition switch to ON (Engine off). • Measure voltage between generator terminal D (wiring harness-side) and body ground. • Is voltage **B+**?	Yes	Go to the next step.
		No	Malfunction at generator. Go to Step 7.
5	**INSPECT PCM GENERATOR FOR POOR CONNECTION** • Turn the ignition switch off. • Disconnect PCM connector. • Inspect for poor connection (such as damaged/ pulled-out pins, corrosion). • Is there any malfunction?	Yes	Repair or replace pins, then go to Step 8.
		No	Go to the next step.
6	**INSPECT GENERATOR CONTROL CIRCUIT FOR SHORT TO POWER SUPPLY** • Turn ignition switch to ON (engine OFF). • Measure voltage between generator terminal D (wiring harness-side) and body ground. • Is voltage **B+**?	Yes	Repair or replace harness for short to power supply, then go to Step 8.
		No	Go to Step 8.
7	**INSPECT GENERATOR CONTROL TERMINAL FOR SHORT TO POWER SUPPLY** • Measure resistance between generator terminal D (part-side) and body ground. • Is voltage **B+**?	Yes	Repair or replace generator, then go to the next step.
		No	Go to the next step.
8	**VERIFY TROUBLESHOOTING OF DTC P2504 COMPLETED** • Make sure to reconnect all connectors. • Clear the DTC from the PCM memory using the WDS or equivalent. • Turn ignition switch to OFF, then start engine. • Is same DTC present?	Yes	Replace PCM, then go to the next step. (See 01–40A–9 PCM REMOVAL/INSTALLATION [L3].)
		No	Go to the next step.
9	**VERIFY AFTER REPAIR PROCEDURE** • Perform the "After Repair Procedure". (See 01–02A–12 AFTER REPAIR PROCEDURE [L3].) • Is any DTC present?	Yes	Go to the applicable DTC inspection. (See 01–02A–18 DTC TABLE [L3].)
		No	Troubleshooting completed.

DTC P2507 [L3]

E6U010202500W05

DTC P2507	PCM B+ voltage low
DETECTION CONDITION	• The PCM monitors the voltage of back-up battery positive terminal. If the PCM detects battery positive terminal voltage **below 2.5 V** for **2 s**, the PCM determines that the backup voltage circuit has a malfunction. **Diagnostic support note** • This is a continuous monitor (CCM). • MIL illuminates if PCM detects the above malfunction condition during first drive cycle. • PENDING CODE is available if PCM detects the above malfunction condition. • FREEZE FRAME DATA is available. • DTC is stored in PCM memory.
POSSIBLE CAUSE	• Melt down EEC fuse • Open circuit in wiring between EEC fuse and PCM terminal 1BA • Short to ground between EEC fuse and PCM terminal 1BA • Poor connection of PCM connector • PCM malfunction

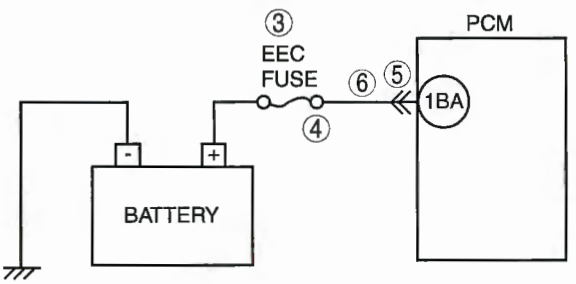

PCM
WIRING HARNESS-SIDE CONNECTOR

1BE	1BA	1AW	1AS	1AO	1AK	1AG	1AC	1Y	1U	1Q	1M	1I	1E	1A
1BF	1BB	1AX	1AT	1AP	1AL	1AH	1AD	1Z	1V	1R	1N	1J	1F	1B
1BG	1BC	1AY	1AU	1AQ	1AM	1AI	1AE	1AA	1W	1S	1O	1K	1G	1C
1BH	1BD	1AZ	1AV	1AR	1AN	1AJ	1AF	1AB	1X	1T	1P	1L	1H	1D

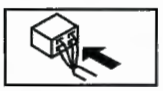

Diagnostic procedure

STEP	INSPECTION		ACTION
1	**VERIFY FREEZE FRAME DATA AND DIAGNOSTIC MONITORING TEST RESULTS HAS BEEN RECORDED** • Has FREEZE FRAME DATA been recorded?	Yes	Go to the next step.
		No	Record the FREEZE FRAME on the repair order, then go t the next step.
2	**VERIFY RELATED REPAIR INFORMATION AVAILABILITY** • Check for related Service Bulletins and/or on-line repair information availability. • Is any related repair information available?	Yes	Perform repair or diagnosis according to the available repair information. • If the vehicle is not repaired, then go to the next step.
		No	Go to the next step.
3	**INSPECT EEC FUSE** • Turn the ignition switch off. • Inspect EEC fuse for failure and proper. • Is it normal?	Yes	Go to Step 6.
		No	• If EEC fuse has been burnt, then go to the next step. • If EEC fuse is not installed correctly, install it correctly then go to Step 7.
4	**INSPECT MONITOR CIRCUIT FOR SHORT TO GROUND** • Disconnect battery cables. • Inspect for continuity between EEC fuse terminal and body ground. • Is there continuity?	Yes	Repair or replace the wiring harness for short to ground and install new fuse, then go to Step 7.
		No	Go to Step 7.
5	**INSPECT PCM CONNECTOR FOR POOR CONNECTION** • Disconnect PCM connector. • Inspect for poor connection (such as damaged/ pulled-out pins, corrosion). • Is there any malfunction?	Yes	Repair the terminals, then go to Step 7.
		No	Go to the next step.
6	**INSPECT MONITOR CIRCUIT FOR OPEN CIRCUIT** • Disconnect battery cables. • Inspect for continuity between EEC fuse terminal and PCM terminal 1BA (wiring harness-side). • Is there continuity?	Yes	Go to the next step.
		No	Repair or replace the wiring harness for an open circuit, then go to the next step.
7	**VERIFY TROUBLESHOOTING OF DTC P2507 COMPLETED** • Make sure to reconnect all disconnected connectors. • Turn the ignition switch to the ON position (Engine off). • Clear the DTC from the PCM memory using the WDS or equivalent. • Start the engine and warm it up completely. • Is the same DTC present?	Yes	Replace the PCM, then go to the next step. (See 01–40A–9 PCM REMOVAL/INSTALLATION [L3].)
		No	Go to the next step.
8	**VERIFY AFTER REPAIR PROCEDURE** • Perform the "AFTER REPAIR PROCEDURE". (See 01–02A–12 AFTER REPAIR PROCEDURE [L3].) • Is any DTC present?	Yes	Go to the applicable DTC inspection. (See 01–02A–18 DTC TABLE [L3].)
		No	Troubleshooting completed.

DTC P2610 [L3]

E6U010202600W03

DTC P2610	PCM internal engine off timer performance
DETECTION CONDITION	• PCM internal engine off timer is damaged. **Diagnostic support note** • This is a continuous monitor (CCM). • The MIL illuminates if the PCM detects the above malfunction condition in two consecutive drive cycles or in one drive cycle while the DTC for the same malfunction has been stored in the PCM. • PENDING CODE is available if the PCM detects the above malfunction condition during the first drive cycle. • FREEZE FRAME DATA is available. • DTCs are stored in the PCM memory.
POSSIBLE CAUSE	• PCM internal engine off timer is damaged.

Diagnostic procedure

STEP	INSPECTION		ACTION
1	**VERIFY FREEZE FRAME DATA HAS BEEN RECORDED** • Has the FREEZE FRAME DATA been recorded?	Yes	Go to the next step.
		No	Record the FREEZE FRAME DATA on the repair order, then go to the next step.
2	**VERIFY RELATED REPAIR INFORMATION AVAILABILITY** • Verify related service Bulletins and/or on-line repair information availability. • Is any related repair information available?	Yes	Perform the repair or diagnosis according to the available repair information. • If the vehicle is not repaired, go to the next step.
		No	Go to the next step.
3	**VERIFY TROUBLESHOOTING OF DTC P2610 COMPLETED** • Make sure to reconnect all the disconnected connectors. • Clear the DTC from the PCM memory using the WDS or equivalent. • Start the engine. • Is the same DTC present?	Yes	Replace the PCM, then go to the next step. (See 01–40A–9 PCM REMOVAL/INSTALLATION [L3].)
		No	Go to the next step.
4	**VERIFY AFTER REPAIR PROCEDURE** • Perform the "AFTER REPAIR PROCEDURE". (See 01–02A–12 AFTER REPAIR PROCEDURE [L3].) • Are any DTCs present?	Yes	Go to the applicable DTC troubleshooting. (See 01–02A–18 DTC TABLE [L3].)
		No	DTC troubleshooting completed.

DTC P2676 [L3]

E6U010202600W01

DTC P2676	Variable air duct (VAD) solenoid valve circuit low input
DETECTION CONDITION	**California emission regulation applicable ATX model** • The PCM monitors the VAD solenoid valve control signal voltage and current. If the following conditions ai met, the PCM determines that there is the VAD solenoid valve circuit problem. — The PCM turns the VAD solenoid valve off, but the voltage of the VAD solenoid valve control signal remains low. **Diagnostic support note** • This is a continuous monitor (Other). • MIL does not illuminate. • PENDING CODE is available if PCM detects the above malfunction condition. • FREEZE FRAME DATA is not available. • DTC is stored in the PCM memory.
	Except for California emission regulation applicable ATX model • The PCM monitors VAD solenoid valve control signal. If the PCM turns VAD solenoid valve off but voltage still remains low, the PCM determines that VAD solenoid valve circuit has malfunction. **Diagnostic support note** • This is a continuous monitor (Other). • MIL does not illuminate. • PENDING CODE is available if PCM detects the above malfunction condition. • FREEZE FRAME DATA is not available. • DTC is stored in the PCM memory.
POSSIBLE CAUSE	• VAD solenoid valve malfunction • Open circuit in wiring between main relay and VAD solenoid valve terminal A • Open circuit in wiring between VAD solenoid valve terminal B and PCM terminal 1K • Short to ground in wiring between VAD solenoid valve terminal B and PCM terminal 1K • Connector or terminal malfunction • PCM malfunction

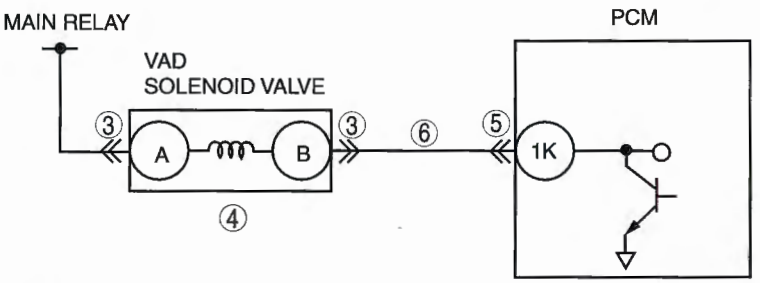

VAD SOLENOID VALVE
HARNESS SIDE CONNECTOR

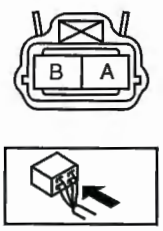

PCM
HARNESS SIDE CONNECTOR

1BE	1BA	1AW	1AS	1AO	1AK	1AG	1AC	1Y	1U	1Q	1M	1I	1E	1A
1BF	1BB	1AX	1AT	1AP	1AL	1AH	1AD	1Z	1V	1R	1N	1J	1F	1B
1BG	1BC	1AY	1AU	1AQ	1AM	1AI	1AE	1AA	1W	1S	1O	1K	1G	1C
1BH	1BD	1AZ	1AV	1AR	1AN	1AJ	1AF	1AB	1X	1T	1P	1L	1H	1D

Diagnostic procedure

STEP	INSPECTION		ACTION
1	**VERIFY FREEZE FRAME DATA HAS BEEN RECORDED** • Has FREEZE FRAME DATA been recorded?	Yes	Go to the next step.
		No	Record the FREEZE FRAME DATA on the repair order, then go to the next step.
2	**VERIFY RELATED REPAIR INFORMATION AVAILABILITY** • Check for related Service Bulletins and/or on-line repair information availability. • Is any related repair information available?	Yes	Perform repair or diagnosis according to the available repair information. • If the vehicle is not repaired, go to the next step.
		No	Go to the next step.
3	**INSPECT VAD SOLENOID VALVE CONNECTOR FOR POOR CONNECTION** • Turn the ignition switch off. • Disconnect VAD solenoid valve connector. • Inspect for poor connection (such as damaged/pulled-out pins, corrosion). • Is there any malfunction?	Yes	Repair or replace the terminal, then go to Step 9.
		No	Go to the next step.
4	**INSPECT VAD SOLENOID VALVE MALFUNCTION** • Perform VAD solenoid valve inspection. (See 01–13A–6 VARIABLE AIR DUCT (VAD) CONTROL SOLENOID VALVE INSPECTION [L3].) • Is VAD solenoid valve normal?	Yes	Go to the next step.
		No	Replace VAD solenoid valve, then go to step 9.
5	**INSPECT VAD SOLENOID VALVE POWER SUPPLY CIRCUIT FOR OPEN CIRCUIT** • Turn the ignition switch to the ON position (Engine off). • Measure voltage between VAD solenoid valve terminal A (wiring harness-side) and body ground. • Is voltage **B+**?	Yes	Go to the next step.
		No	Repair or replace wiring harness for open circuit, then go to Step 9.
6	**INSPECT VAD SOLENOID VALVE CONTROL CIRCUIT FOR SHORT TO GROUND** • Inspect continuity between VAD solenoid valve terminal B (wiring harness-side) and body ground. • Is there continuity?	Yes	Repair or replace wiring harness for short to ground, then go to Step 9.
		No	Go to the next step.
7	**INSPECT PCM CONNECTOR FOR POOR CONNECTION** • Disconnect the PCM connector. • Inspect for poor connection at terminal 1K. (such as damaged/pulled-out pins, corrosion). • Is there any malfunction?	Yes	Repair terminal, then go to Step 9.
		No	Go to the next step.
8	**INSPECT VAD SOLENOID VALVE CONTROL CIRCUIT FOR OPEN CIRCUIT** • Inspect for continuity between VAD solenoid valve terminal B (wiring harness-side) and PCM terminal 1K (wiring harness-side). • Is there continuity?	Yes	Go to the next step.
		No	Repair or replace wiring harness for open circuit, then go to the next step.
9	**VERIFY TROUBLESHOOTING OF DTC P2676 COMPLETED** • Make sure to reconnect all disconnected connectors. • Turn the ignition switch to the ON position (Engine off). • Clear the DTC from the PCM memory using the WDS or equivalent. • Turn the ignition switch off. • Start engine and run engine speed **above 4,400 rpm** few times. • Retrieve any DTC. • Is the PENDING CODE for this DTC present?	Yes	Replace the PCM, then go to the next step. (See 01–40A–9 PCM REMOVAL/INSTALLATION [L3].)
		No	Go to the next step.
10	**VERIFY AFTER REPAIR PROCEDURE** • Perform the "After Repair Procedure". (See 01–02A–12 AFTER REPAIR PROCEDURE [L3].) • Is any DTC present?	Yes	Go to the applicable DTC inspection. (See 01–02A–18 DTC TABLE [L3].)
		No	Troubleshooting completed.

DTC P2677 [L3]

E6U010202600W02

DTC P2677	Variable air duct (VAD) solenoid valve circuit high input
DETECTION CONDITION	**California emission regulation applicable ATX model** • The PCM monitors the VAD solenoid valve control signal voltage and current. If the following conditions are met, the PCM determines that there is the VAD solenoid valve circuit problem. — The PCM turns the VAD solenoid valve on, but the current of the VAD solenoid valve control signal remains high. **Diagnostic support note** • This is a continuous monitor (Other). • MIL does not illuminate. • PENDING CODE is available if PCM detects the above malfunction condition. • FREEZE FRAME DATA is not available. • DTC is stored in the PCM memory.
	Except for California emission regulation applicable ATX model • The PCM monitors VAD solenoid valve control signal. If the PCM turns VAD solenoid valve on but voltage still remains high, the PCM determines that VAD solenoid valve circuit has malfunction. **Diagnostic support note** • This is a continuous monitor (Other). • MIL does not illuminate. • PENDING CODE is available if PCM detects the above malfunction condition. • FREEZE FRAME DATA is not available. • DTC is stored in the PCM memory.
POSSIBLE CAUSE	• VAD solenoid valve malfunction • Short to power supply between VAD solenoid valve terminal B and PCM terminal 1K • Shorted VAD solenoid valve or PCM connector • PCM malfunction

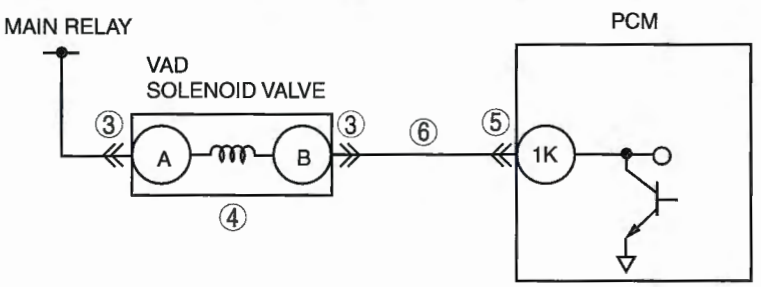

VAD SOLENOID VALVE
HARNESS SIDE CONNECTOR



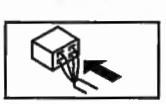

PCM
HARNESS SIDE CONNECTOR

1BE	1BA	1AW	1AS	1AO	1AK	1AG	1AC	1Y	1U	1Q	1M	1I	1E	1A
1BF	1BB	1AX	1AT	1AP	1AL	1AH	1AD	1Z	1V	1R	1N	1J	1F	1B
1BG	1BC	1AY	1AU	1AQ	1AM	1AI	1AE	1AA	1W	1S	1O	1K	1G	1C
1BH	1BD	1AZ	1AV	1AR	1AN	1AJ	1AF	1AB	1X	1T	1P	1L	1H	1D

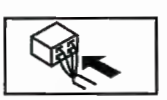

Diagnostic procedure

STEP	INSPECTION		ACTION
1	**VERIFY FREEZE FRAME DATA HAS BEEN RECORDED** • Has FREEZE FRAME DATA been recorded?	Yes	Go to the next step.
		No	Record the FREEZE FRAME DATA on the repair order, then go to the next step.
2	**VERIFY RELATED REPAIR INFORMATION AVAILABILITY** • Check for related Service Bulletins and/or on-line repair information availability. • Is any repair information available?	Yes	Perform repair or diagnosis according to the available repair information. • If the vehicle is not repaired, go to the next step.
		No	Go to the next step.
3	**INSPECT VAD SOLENOID VALVE CONNECTOR FOR POOR CONNECTION** • Turn the ignition switch off. • Disconnect VAD solenoid valve connector. • Inspect for poor connection (such as damaged/pulled-out pins, corrosion). • Is there any malfunction?	Yes	Repair or replace the terminal, then go to Step 7.
		No	Go to the next step.
4	**INSPECT VAD SOLENOID VALVE MALFUNCTION** • Perform VAD solenoid valve inspection. (See 01–13A–6 VARIABLE AIR DUCT (VAD) CONTROL SOLENOID VALVE INSPECTION [L3].) • Is VIS solenoid valve normal?	Yes	Go to the next step.
		No	Replace VAD solenoid valve, then go to Step 7.
5	**INSPECT PCM CONNECTOR FOR POOR CONNECTION** • Turn the ignition switch off. • Disconnect the PCM connector. • Inspect for poor connection at terminal 1K. (such as damaged/pulled-out pins, corrosion). • Is there any malfunction?	Yes	Repair terminal, then go to Step 7.
		No	Go to the next step.
6	**INSPECT VAD SOLENOID VALVE CONTROL CIRCUIT SHORT TO POWER SUPPLY** • Turn the ignition switch to the ON position (Engine off). • Measure voltage between VAD solenoid valve terminal B (wiring harness-side) and body ground. • Is voltage **B+**?	Yes	Repair or replace wiring harness for open circuit, then go to the next step.
		No	Go to the next step.
7	**VERIFY TROUBLESHOOTING OF DTC P2677 COMPLETED** • Make sure to reconnect all disconnected connectors. • Turn the ignition switch to the ON position (Engine off). • Clear the DTC from the PCM memory using the WDS or equivalent. • Turn the ignition switch off. • Start engine and run engine speed a**bove 4,400 rpm** few times. • Retrieve any DTC. • Is the PENDING CODE for this DTC present?	Yes	Replace the PCM, then go to the next step. (See 01–40A–9 PCM REMOVAL/INSTALLATION [L3].)
		No	Go to the next step.
8	**VERIFY AFTER REPAIR PROCEDURE** • Perform the "After Repair Procedure". (See 01–02A–12 AFTER REPAIR PROCEDURE [L3].) • Is any DTC present?	Yes	Go to the applicable DTC inspection. (See 01–02A–18 DTC TABLE [L3].)
		No	Troubleshooting completed.

01–02B ON-BOARD DIAGNOSTIC [ENGINE CONTROL SYSTEM (L3 WITH TC)]

-BOARD DIAGNOSTIC WIRING DIAGRAM [L3 WITH TC] 01–02B–3
MONITORING SYSTEM AND CONTROL SYSTEM DEVICE RELATIONSHIP CHART [L3 WITH TC]..... 01–02B–5
FOREWORD [L3 WITH TC] 01–02B–6
OBD-II PENDING TROUBLE CODE [L3 WITH TC] 01–02B–6
OBD-II FREEZE FRAME DATA [L3 WITH TC] 01–02B–6
OBD-II ON-BOARD SYSTEM READINESS TEST [L3 WITH TC] ... 01–02B–6
OBD-II DIAGNOSTIC MONITORING TEST RESULTS [L3 WITH TC]..... 01–02B–6
OBD-II READ/CLEAR DIAGNOSTIC TEST RESULTS [L3 WITH TC]..... 01–02B–6
OBD-II PARAMETER IDENTIFICATION (PID) ACCESS [L3 WITH TC]..... 01–02B–7
ON-BOARD DIAGNOSTIC TEST [L3 WITH TC] 01–02B–7
DTCs Reading Procedure 01–02B–7
Pending Trouble Code Access Procedure 01–02B–7
Freeze Frame PID Data Access Procedure 01–02B–7
On-Board System Readiness Tests Access Procedure 01–02B–8
PID/DATA Monitor and Record Procedure 01–02B–8
Diagnostic Monitoring Test Results Access Procedure..... 01–02B–8
AFTER REPAIR PROCEDUR E [L3 WITH TC]..... 01–02B–8
KOEO/KOER SELF TEST [L3 WITH TC] 01–02B–9
OBD-II DRIVE MODE [L3 WITH TC]... 01–02B–9
PCM Adaptive Memory Production Drive Mode..... 01–02B–10
EGR System Repair Verification Drive Mode..... 01–02B–10
HO2S heater, HO2S, and TWC Repair Verification Drive Mode 01–02B–11
EVAP System Repair Verification Drive Mode..... 01–02B–11
PCM Adaptive Memory Production, EGR, HO2S heater, HO2S, TWC, and EVAP System Repair Verification Drive Mode..... 01–02B–12
DIAGNOSTIC MONITORING TEST RESULTS [L3 WITH TC]..... 01–02B–13
DTC TABLE [L3 WITH TC]..... 01–02B–14
DTC P0011 [L3 WITH TC]..... 01–02B–22
DTC P0012 [L3 WITH TC]..... 01–02B–24
DTC P0016 [L3 WITH TC]..... 01–02B–26
DTC P0030 [L3 WITH TC]..... 01–02B–28
DTC P0031 [L3 WITH TC]..... 01–02B–30
DTC P0032 [L3 WITH TC]..... 01–02B–32
DTC P0037 [L3 WITH TC]..... 01–02B–34
DTC P0038 [L3 WITH TC]..... 01–02B–36
DTC P0069 [L3 WITH TC]..... 01–02B–38
DTC P0089 [L3 WITH TC] 01–02B–39
DTC P0091 [L3 WITH TC] 01–02B–40
DTC P0092 [L3 WITH TC] 01–02B–42
DTC P0096 [L3 WITH TC] 01–02B–44
DTC P0097 [L3 WITH TC] 01–02B–46
DTC P0098 [L3 WITH TC] 01–02B–48
DTC P0101 [L3 WITH TC] 01–02B–50
DTC P0102 [L3 WITH TC] 01–02B–52
DTC P0103 [L3 WITH TC] 01–02B–54
DTC P0107 [L3 WITH TC] 01–02B–56
DTC P0108 [L3 WITH TC] 01–02B–58
DTC P0111 [L3 WITH TC] 01–02B–60
DTC P0112 [L3 WITH TC] 01–02B–61
DTC P0113 [L3 WITH TC] 01–02B–63
DTC P0116 [L3 WITH TC] 01–02B–65
DTC P0117 [L3 WITH TC] 01–02B–67
DTC P0118 [L3 WITH TC] 01–02B–69
DTC P0122 [L3 WITH TC] 01–02B–71
DTC P0123 [L3 WITH TC] 01–02B–73
DTC P0125 [L3 WITH TC] 01–02B–75
DTC P0126, P0128 [L3 WITH TC] 01–02B–77
DTC P0131 [L3 WITH TC] 01–02B–80
DTC P0132 [L3 WITH TC] 01–02B–82
DTC P0133 [L3 WITH TC] 01–02B–84
DTC P0134 [L3 WITH TC] 01–02B–86
DTC P0137 [L3 WITH TC] 01–02B–89
DTC P0138 [L3 WITH TC] 01–02B–91
DTC P0139 [L3 WITH TC] 01–02B–93
DTC P0140 [L3 WITH TC] 01–02B–96
DTC P0192 [L3 WITH TC] 01–02B–98
DTC P0193 [L3 WITH TC] 01–02B–100
DTC P0201 [L3 WITH TC] 01–02B–102
DTC P0202 [L3 WITH TC] 01–02B–104
DTC P0203 [L3 WITH TC] 01–02B–106
DTC P0204 [L3 WITH TC] 01–02B–108
DTC P0222 [L3 WITH TC] 01–02B–110
DTC P0223 [L3 WITH TC] 01–02B–112
DTC P0234 [L3 WITH TC] 01–02B–114
DTC P0245 [L3 WITH TC] 01–02B–115
DTC P0246 [L3 WITH TC] 01–02B–116
DTC P0300 [L3 WITH TC] 01–02B–118
DTC P0301, P0302, P0303, P0304 [L3 WITH TC] 01–02B–122
DTC P0327 [L3 WITH TC] 01–02B–124
DTC P0328 [L3 WITH TC] 01–02B–126
DTC P0335 [L3 WITH TC] 01–02B–128
DTC P0340 [L3 WITH TC] 01–02B–131
DTC P0401 [L3 WITH TC] 01–02B–134
DTC P0403 [L3 WITH TC] 01–02B–136
DTC P0421 [L3 WITH TC] 01–02B–138
DTC P0441 [L3 WITH TC] 01–02B–140
DTC P0442 [L3 WITH TC] 01–02B–142
DTC P0443 [L3 WITH TC] 01–02B–144
DTC P0446 [L3 WITH TC] 01–02B–146
DTC P0455 [L3 WITH TC] 01–02B–148
DTC P0456 [L3 WITH TC] 01–02B–150
DTC P0461 [L3 WITH TC] 01–02B–152
DTC P0462 [L3 WITH TC] 01–02B–153
DTC P0463 [L3 WITH TC] 01–02B–154
DTC P0480 [L3 WITH TC] 01–02B–155

DTC P0500 [L3 WITH TC] 01–02B–157
DTC P0505 [L3 WITH TC] 01–02B–158
DTC P0506 [L3 WITH TC] 01–02B–160
DTC P0507 [L3 WITH TC] 01–02B–162
DTC P0550 [L3 WITH TC] 01–02B–164
DTC P0564 [L3 WITH TC] 01–02B–166
DTC P0571 [L3 WITH TC] 01–02B–168
DTC P0601 [L3 WITH TC] 01–02B–170
DTC P0602 [L3 WITH TC] 01–02B–171
DTC P0604 [L3 WITH TC] 01–02B–172
DTC P0606 [L3 WITH TC] 01–02B–173
DTC P0607 [L3 WITH TC] 01–02B–174
DTC P0610 [L3 WITH TC] 01–02B–175
DTC P0611 [L3 WITH TC] 01–02B–176
DTC P0638 [L3 WITH TC] 01–02B–178
DTC P0703 [L3 WITH TC] 01–02B–179
DTC P0704 [L3 WITH TC] 01–02B–182
DTC P0850 [L3 WITH TC] 01–02B–185
DTC P2004 [L3 WITH TC] 01–02B–188
DTC P2006 [L3 WITH TC] 01–02B–191
DTC P2009 [L3 WITH TC] 01–02B–194
DTC P2010 [L3 WITH TC] 01–02B–196
DTC P2088 [L3 WITH TC] 01–02B–198
DTC P2089 [L3 WITH TC] 01–02B–200
DTC P2096 [L3 WITH TC] 01–02B–202
DTC P2097 [L3 WITH TC] 01–02B–205
DTC P2100 [L3 WITH TC] 01–02B–208
DTC P2101 [L3 WITH TC] 01–02B–210
DTC P2102 [L3 WITH TC] 01–02B–214
DTC P2103 [L3 WITH TC] 01–02B–216
DTC P2107 [L3 WITH TC] 01–02B–218
DTC P2108 [L3 WITH TC] 01–02B–218
DTC P2119 [L3 WITH TC] 01–02B–220
DTC P2122 [L3 WITH TC] 01–02B–221
DTC P2123 [L3 WITH TC] 01–02B–22
DTC P2127 [L3 WITH TC] 01–02B–2
DTC P2128 [L3 WITH TC] 01–02B–227
DTC P2135 [L3 WITH TC] 01–02B–229
DTC P2138 [L3 WITH TC] 01–02B–230
DTC P2177 [L3 WITH TC] 01–02B–231
DTC P2178 [L3 WITH TC] 01–02B–234
DTC P2187 [L3 WITH TC] 01–02B–237
DTC P2188 [L3 WITH TC] 01–02B–240
DTC P2195 [L3 WITH TC] 01–02B–243
DTC P2196 [L3 WITH TC] 01–02B–245
DTC P2228 [L3 WITH TC] 01–02B–248
DTC P2229 [L3 WITH TC] 01–02B–249
DTC P2237 [L3 WITH TC] 01–02B–250
DTC P2245 [L3 WITH TC] 01–02B–252
DTC P2246 [L3 WITH TC] 01–02B–254
DTC P2251 [L3 WITH TC] 01–02B–256
DTC P2401 [L3 WITH TC] 01–02B–258
DTC P2402 [L3 WITH TC] 01–02B–261
DTC P2404 [L3 WITH TC] 01–02B–263
DTC P2405 [L3 WITH TC] 01–02B–264
DTC P2407 [L3 WITH TC] 01–02B–265
DTC P2502 [L3 WITH TC] 01–02B–266
DTC P2503 [L3 WITH TC] 01–02B–268
DTC P2504 [L3 WITH TC] 01–02B–270
DTC P2507 [L3 WITH TC] 01–02B–272
DTC P2610 [L3 WITH TC] 01–02B–274

ON-BOARD DIAGNOSTIC WIRING DIAGRAM [L3 WITH TC]

E6U010200000WD1

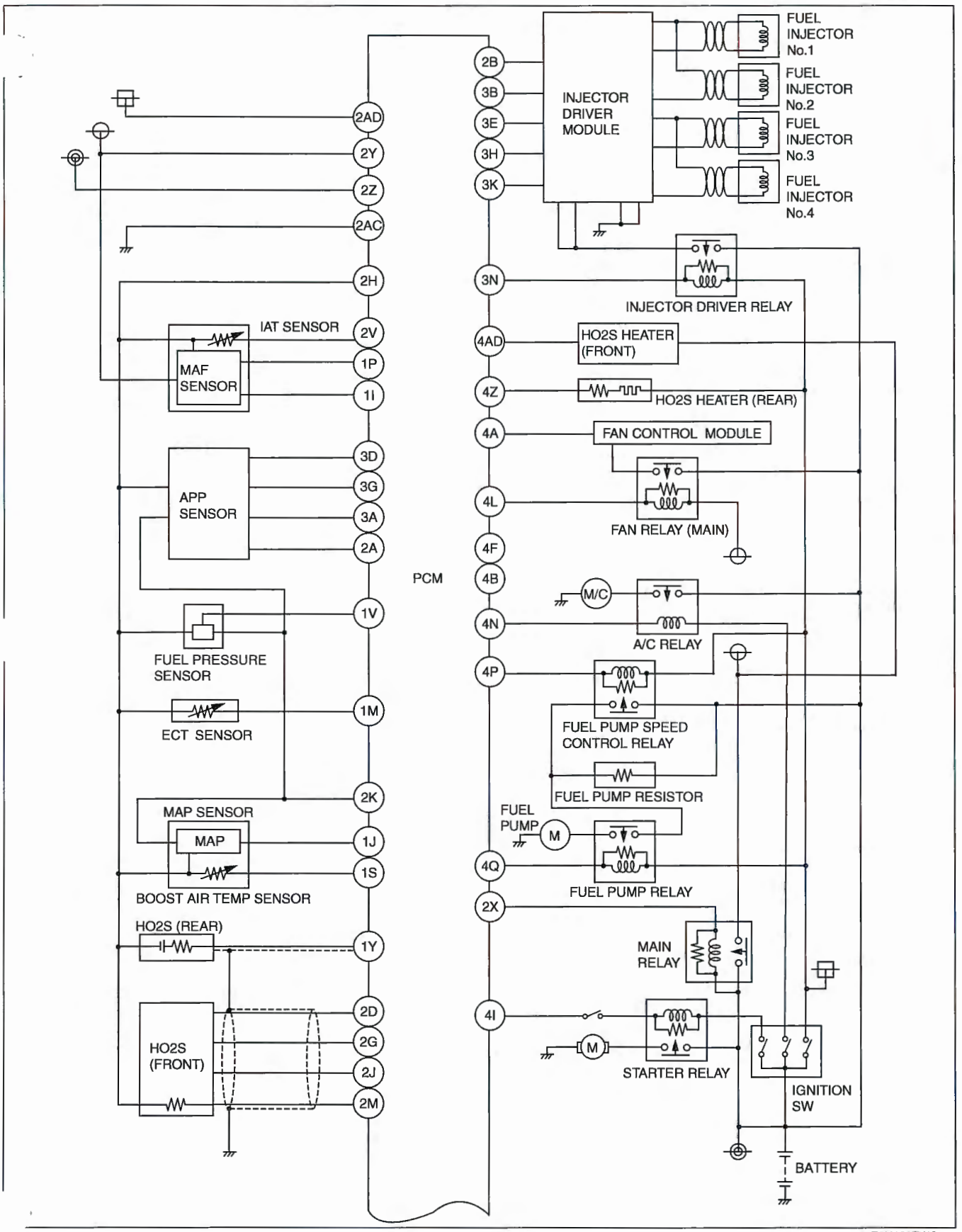

E6U103ZWC001

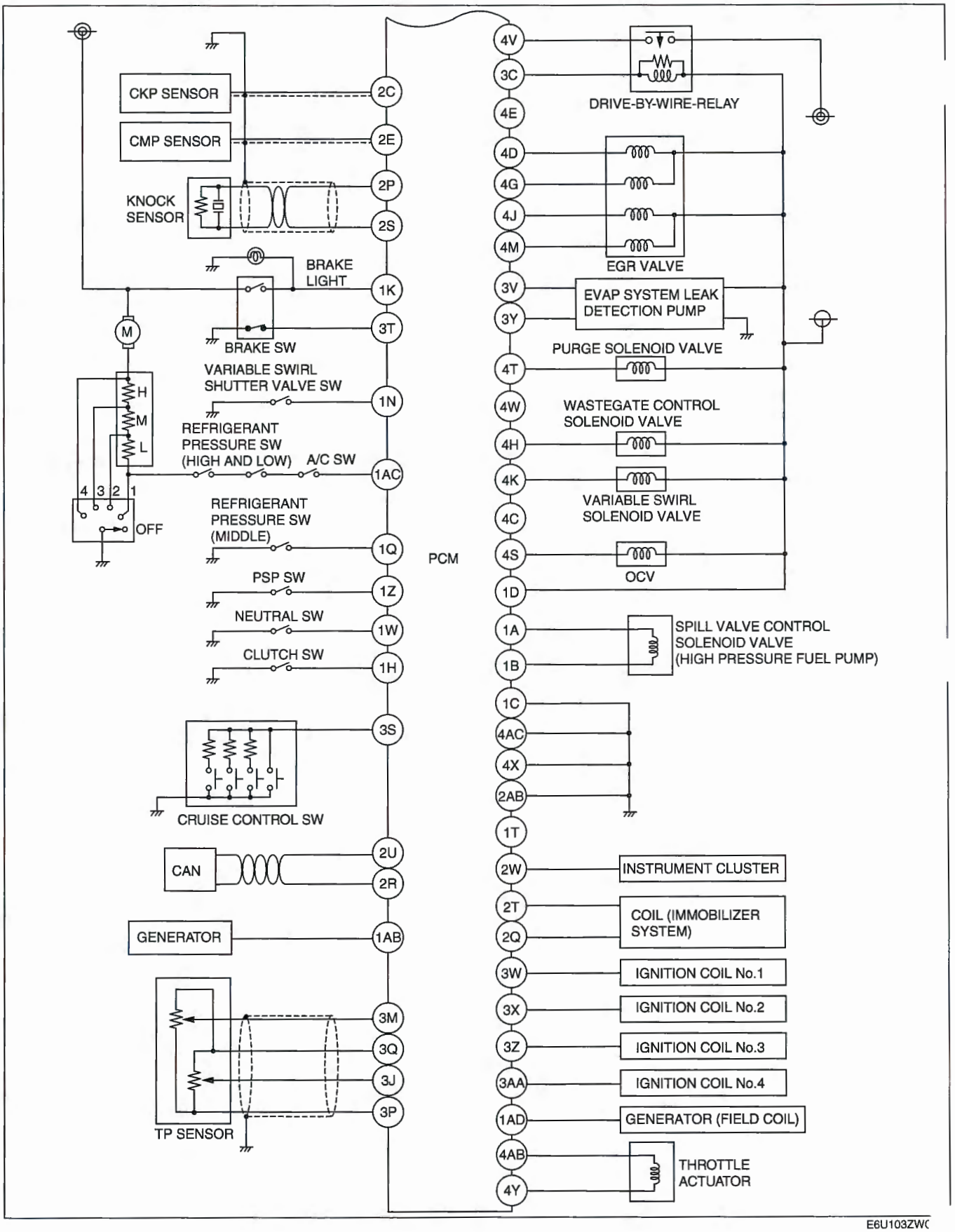
CKP SENSOR
CMP SENSOR
KNOCK SENSOR
BRAKE LIGHT
BRAKE SW
VARIABLE SWIRL SHUTTER VALVE SW
REFRIGERANT PRESSURE SW (HIGH AND LOW)
A/C SW
REFRIGERANT PRESSURE SW (MIDDLE)
PSP SW
NEUTRAL SW
CLUTCH SW
CRUISE CONTROL SW
CAN
GENERATOR
TP SENSOR
PCM
DRIVE-BY-WIRE-RELAY
EGR VALVE
EVAP SYSTEM LEAK DETECTION PUMP
PURGE SOLENOID VALVE
WASTEGATE CONTROL SOLENOID VALVE
VARIABLE SWIRL SOLENOID VALVE
OCV
SPILL VALVE CONTROL SOLENOID VALVE (HIGH PRESSURE FUEL PUMP)
INSTRUMENT CLUSTER
COIL (IMMOBILIZER SYSTEM)
IGNITION COIL No.1
IGNITION COIL No.2
IGNITION COIL No.3
IGNITION COIL No.4
GENERATOR (FIELD COIL)
THROTTLE ACTUATOR
OFF
E6U103ZW(

MONITORING SYSTEM AND CONTROL SYSTEM DEVICE RELATIONSHIP CHART [L3 WITH TC]

E6U010200000WD2

×: Applicable

Component	Oxygen sensor monitor	Oxygen sensor heater monitor	Catalyst monitor	Misfire monitor	Fuel system monitor	Evaporative system monitor	EGR system monitor	Engine cooling system
Input								
Battery		x		x		x		
Ignition switch	x	x				x		
A/C switch, refrigerant pressure switch (high, low pressure)							x	x
TP sensor	x		x	x	x	x	x	
ECT sensor	x	x	x	x	x	x	x	x
IAT sensor	x		x		x	x	x	x
MAF sensor	x	x	x	x	x		x	x
HO2S (front)	x	x	x		x			
HO2S (rear)	x	x	x		x			
Fuel gauge sender unit						x		
BARO sensor	x					x		
MAP sensor							x	
CMP sensor				x				
CKP sensor	x	x	x	x	x	x	x	x
VSS	x					x	x	x
Output								
Fuel injector					x			
HO2S heater (front)		x						
HO2S heater (rear)		x						
EGR valve							x	
Purge solenoid valve	x		x		x	x		
EVAP system leak detection pump						x		
MIL	x	x	x	x	x	x	x	x
DLC-2	x	x	x	x	x	x	x	x

FOREWORD [L3 WITH TC]

E6U010200000WD3

- When the customer reports a vehicle malfunction, check the malfunction indicator lamp (MIL) indication and diagnostic trouble code (DTC), then diagnose the malfunction according to the following flowchart.
  — If a DTC exists, diagnose the applicable DTC inspection. (See 01–02B–14 DTC TABLE [L3 WITH TC].)
  — If a DTC does not exist and the MIL does not illuminate or flash, diagnose the applicable symptom troubleshooting. (See 01–03B–10 QUICK DIAGNOSTIC CHART [L3 WITH TC].)

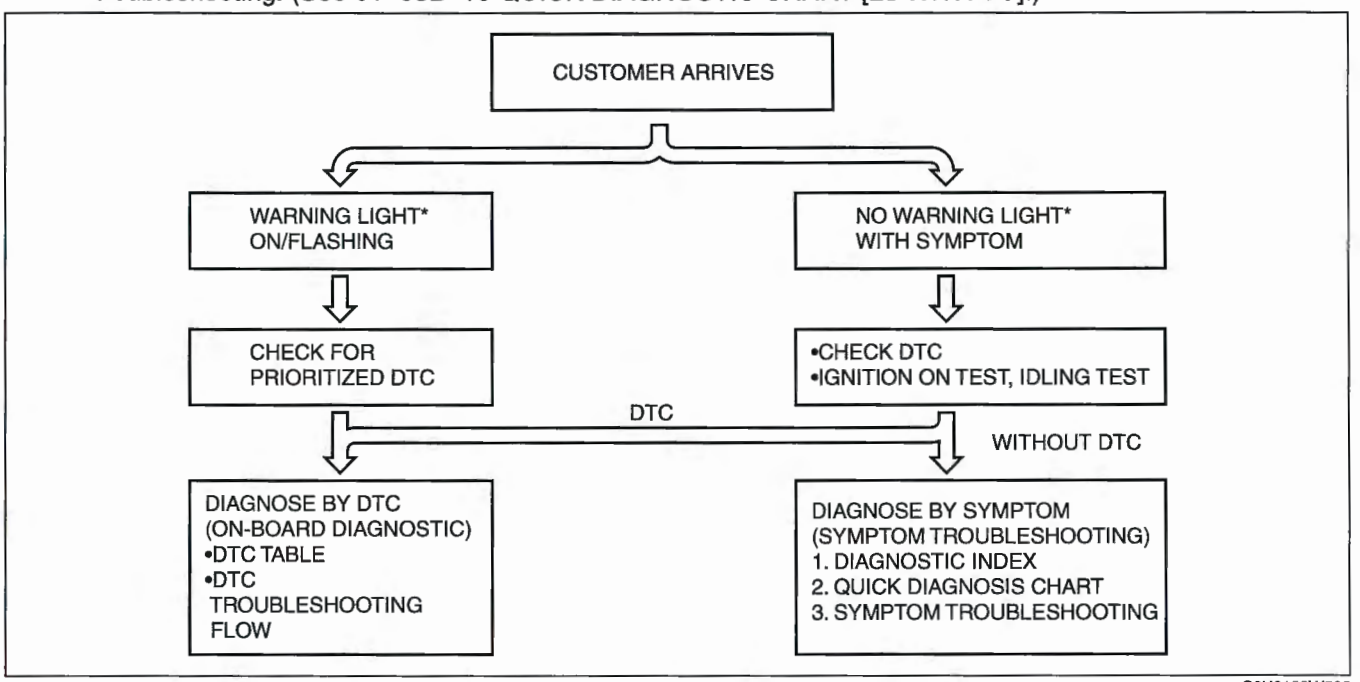

C6U0103W500

*: Malfunction Indicator Lamp (MIL), Generator Warning Light, Security Light

OBD-II PENDING TROUBLE CODE [L3 WITH TC]

E6U010200000WD4

- These appear when a problem is detected in a monitored system. The code for a failed system is stored in the PCM memory in the first drive cycle. This code is called the pending code. If the PCM determines that the system has returned to normal or the problem was mistakenly detected, it deletes the pending code. If the problem is found in the second drive cycle, too the PCM determines that the system is malfunctioning, and the DTC is stored.

OBD-II FREEZE FRAME DATA [L3 WITH TC]

E6U010200000WD5

- This is technical data which indicates the engine condition at the time of the first malfunction. This data will remain in the memory even if another emission-related DTC is stored, with the exception of the Misfire or Fuel System DTCs. Once freeze frame data for the Misfire or Fuel System DTC is stored, it will overwrite any previous data and the freeze frame will not be overwritten again.

OBD-II ON-BOARD SYSTEM READINESS TEST [L3 WITH TC]

E6U010200000WD6

- This shows the OBD-II systems operating status. If any monitor function is incomplete, the WDS or equivalent will identify which monitor function has not been completed. Misfires, Fuel System and Comprehensive Components (CCM) are continuous monitoring-type functions. The catalyst, EGR system, evaporation system and oxygen sensor will be monitored under drive cycles. The OBD-II diagnostic system is initialized by performing the DTC cancellation procedure or disconnecting the negative battery cable.

OBD-II DIAGNOSTIC MONITORING TEST RESULTS [L3 WITH TC]

E6U010200000WD7

- These result from the intermittent monitor system technical data, which are used to determine whether the system is normal or not. They also display the system's thresholds and diagnostic results. The intermittent monitor system monitors the oxygen sensor, EVAP purge system, catalyst and the EGR system.

OBD-II READ/CLEAR DIAGNOSTIC TEST RESULTS [L3 WITH TC]

E6U010200000

- This retrieves all stored DTCs in the PCM and clears the DTC, Freeze Frame Data, On-Board Readiness Test Results, Diagnostic Monitoring Test Results and Pending Trouble Codes.

OBD-II PARAMETER IDENTIFICATION (PID) ACCESS [L3 WITH TC]

E6U010200000WD9

- The PID mode allows access to certain data values, analog and digital inputs and outputs, calculated values and system status information. Since PID values for output devices are PCM internal data values, inspect each device to identify which output devices are malfunctioning.

ON-BOARD DIAGNOSTIC TEST [L3 WITH TC]

E6U010200000WE0

DTCs Reading Procedure

1. Perform the necessary vehicle preparation and visual inspection.
2. Connect the WDS or equivalent to the vehicle DLC-2 16-pin connector located at the left side of the center console.
3. Retrieve DTCs using the WDS or equivalent.

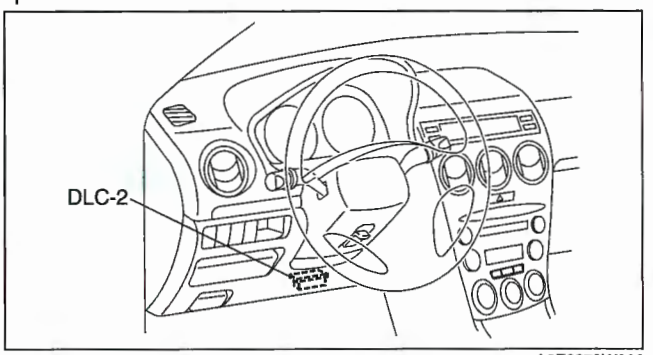

A6E3970W002

Pending Trouble Code Access Procedure

1. Perform the necessary vehicle preparation and visual inspection.
2. Connect the WDS or equivalent to the vehicle DLC-2 16-pin connector located on the left side of the center console.
3. Retrieve **PENDING trouble codes** using the WDS or equivalent.

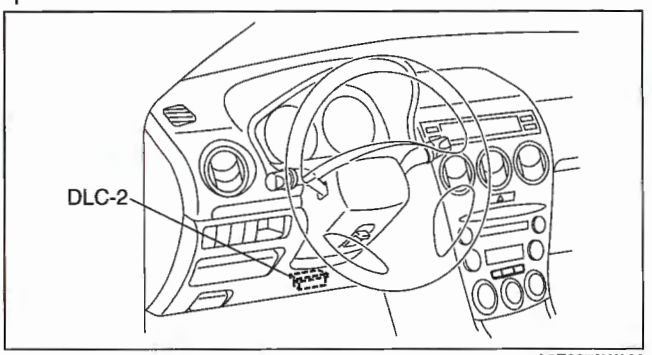

A6E3970W002

Freeze Frame PID Data Access Procedure

1. Perform the necessary vehicle preparation and visual inspection.
2. Connect the WDS or equivalent to the vehicle DLC-2 16-pin connector located on the left side of the center console.
3. Record the FREEZE FRAME PID DATA using the WDS or equivalent.

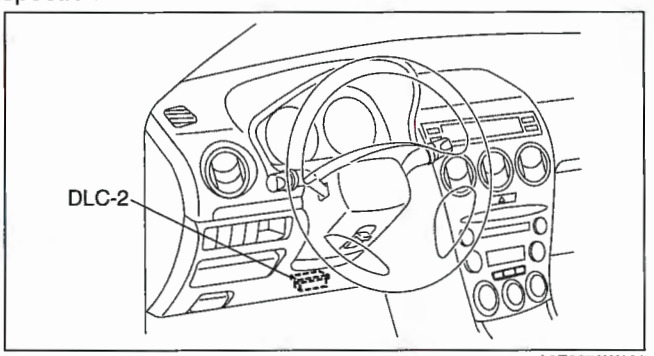

A6E3970W002

On-Board System Readiness Tests Access Procedure

1. Perform the necessary vehicle preparation and visual inspection.
2. Connect WDS or equivalent to the vehicle DLC-2 16-pin connector located on the left side of the center console.
3. Monitor the OBD-II systems operating status using the WDS or equivalent.

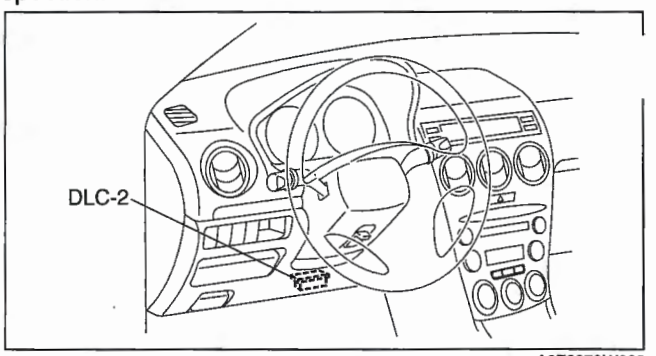

A6E3970W002

PID/DATA Monitor and Record Procedure

1. Perform the necessary vehicle preparation and visual inspection.
2. Connect the WDS or equivalent to the vehicle DLC-2 16-pin connector located on the left side of the center console.
3. Access and monitor PIDs using the WDS or equivalent.

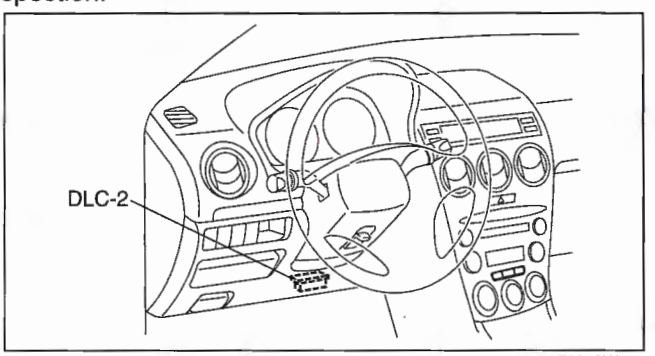

A6E3970W002

Diagnostic Monitoring Test Results Access Procedure

1. Perform the necessary vehicle preparation and visual inspection.
2. Connect the WDS or equivalent to the vehicle DLC-2 16-pin connector located on the left side of the center console.
3. Access to the DIAGNOSTIC MONITORING TEST RESULTS and read the test results using the WDS or equivalent.

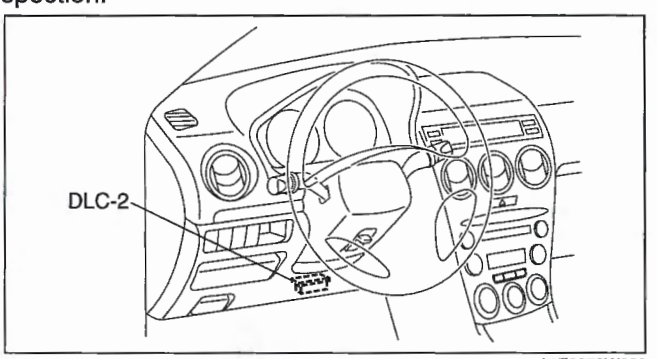

A6E3970W002

AFTER REPAIR PROCEDURE [L3 WITH TC]

1. Connect the WDS or equivalent.
2. Cycle the ignition switch from the off to the ON position.
3. Any retrieved DTCs.
4. Clear all diagnostic data using the WDS or equivalent.

E6U010200000WE1

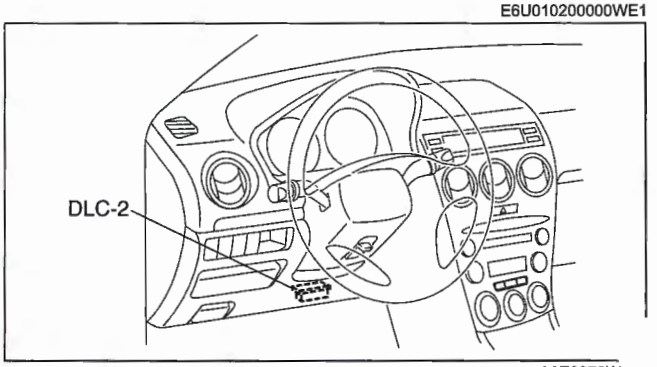

A6E3970W

KOEO/KOER SELF TEST [L3 WITH TC]

E6U010200000WE2

1. Perform the necessary vehicle preparation and visual inspection.
2. Connect the WDS or equivalent to the vehicle DLC-2 16-pin connector located in the driver compartment. Retrieve the KOEO/KOER DTCs using the WDS or equivalent.

OBD-II DRIVE MODE [L3 WITH TC]

E6U010200000WE3

- Using the OBD-II drive mode, the monitoring item requested by OBD-II regulations can be easily diagnosed.
- Performing the Drive Mode inspects the OBD-II system for proper operation and must be performed to ensure that no additional DTCs are present.
- The OBD-II drive mode is divided into the specific drive mode and single drive mode.
- For the specific drive mode, specified drive modes have been set for each individual monitoring item requested by OBD-II regulations, and they can be diagnosed individually. For the single drive mode, the entire monitoring item requested by OBD-II regulations can be diagnosed.
- The following modes are in the specific drive mode. The applicable system is diagnosed by driving in the following drive modes.
  - — PCM Adaptive Memory Produce Drive Mode
  - — EGR System Repair Verification Drive Mode
  - — HO2S heater, HO2S, and TWC Repair Verification Drive Mode
  - — EVAP System Repair Verification Drive Mode
- The following systems are diagnosed with the single drive mode.
  - — EGR system
  - — Oxygen sensor (HO2S)
  - — Oxygen sensor heater
  - — Catalytic converter (TWC)
  - — Fuel, misfire and evaporative (EVAP) system

Caution

- **While performing the Drive Mode, always operate the vehicle in a safe and lawful manner.**
- **When the WDS or equivalent is used to observe monitor system status while driving, be sure to have another technician with you, or record the data in the WDS or equivalent using the PID/DATA MONITOR AND RECORD function and inspect later.**

Note

- Vehicle speed and engine speed detected by the PCM may differ from that indicated by the speedometer and tachometer. Use the WDS or equivalent to monitor vehicle speed.
- If the OBD-II system inspection is not completed during the Drive Mode, the following causes are considered:
  - — The OBD-II system detects the malfunction.
  - — The Drive Mode procedure is not completed correctly.
- Disconnecting the battery will reset the memory. Do not disconnect the battery during and after Drive Mode.
- The WDS or equivalent can be used at anytime through the course of the Drive Mode to monitor the completion status. Monitoring can be done by viewing the ON BOARD SYSTEM READINESS menu.
- The OBD monitoring status can be confirmed with the ignition switch operation. During KOEO, the MIL illuminates for a fail-light inspection for **approx. 17 s**. The OBD monitoring status is confirmed after the fail-light inspection.
  - — If all of the diagnosis is completed even one time, the MIL will continue to illuminate.
  - — If all of the diagnosis is not completed, the MIL flashes for **approx. 7 s**, and then it illuminates until the engine is started.

PCM Adaptive Memory Production Drive Mode

1. Start the engine and warm it up completely.
2. Verify the following conditions and correct if necessary:
   - All accessory loads (A/C, headlights, blower fan, rear window defroster) are off.
3. Perform no load racing at the engine speed shown in the graph, then idle the engine for more than **60 s** after the cooling fan has stopped. If possible, monitor RPM PID for engine speed during this procedure.

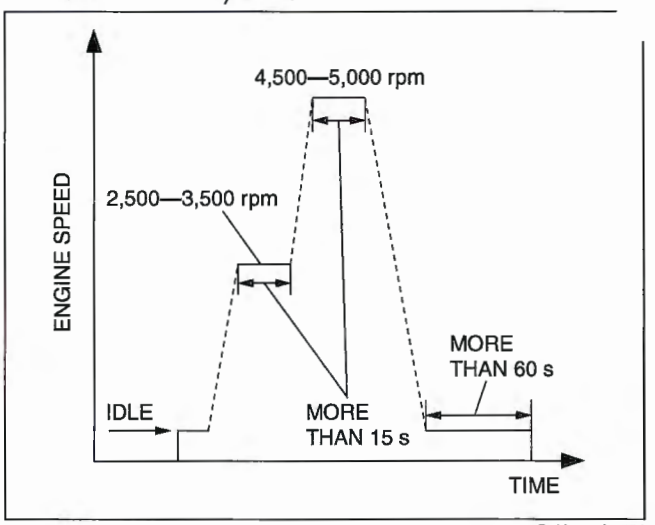

C6U0102W501

EGR System Repair Verification Drive Mode

1. Perform "PCM Adaptive Memory Production Drive Mode" first.
2. Verify all accessory loads (A/C, headlights, blower fan, rear window defroster) are off.
3. Drive the vehicle as shown in the graph.
4. Stop the vehicle and access ON BOARD SYSTEM READINESS menu of GENERIC OBD-II FUNCTION to verify the OBD monitoring status.
   - If completed, the OBD monitoring status items change from non-completed to completed.
   - If not completed, turn the ignition switch off then repeat from Step 3.
5. Access DIAGNOSTIC MONITORING TEST RESULTS menu of GENERIC OBD-II FUNCTIONS to verify the monitor results.
   - If detected values are not within specification, repair has not been completed.
6. Verify no DTCs are available.

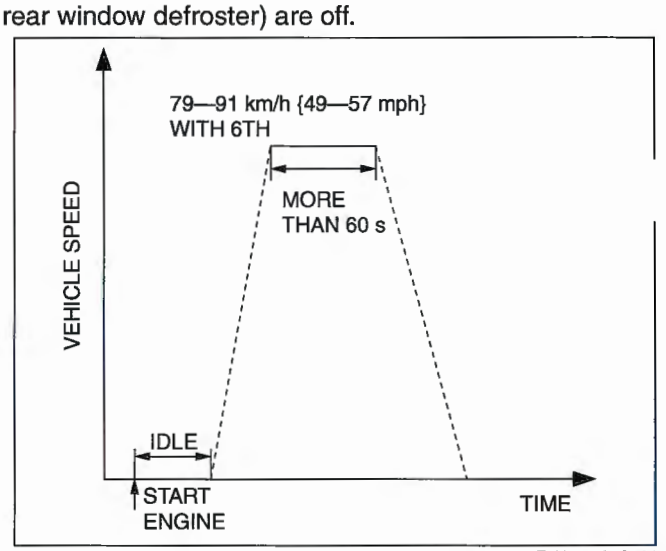

E6U102ZWC504

HO2S heater, HO2S, and TWC Repair Verification Drive Mode

1. Perform "PCM Adaptive Memory Production Drive Mode" first.
2. Verify all accessory loads (A/C, headlights, blower fan, rear window defroster) are off.
3. Drive the vehicle as shown in the graph. The driving conditions before driving at constant speed are not specified.

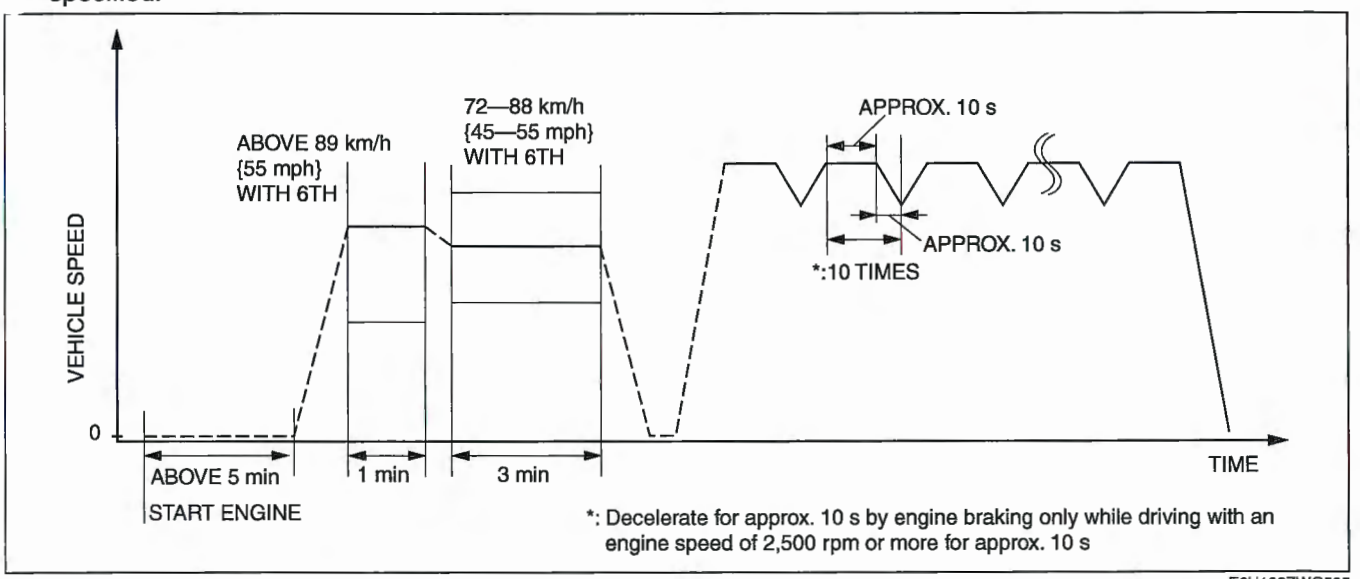

E6U102ZWC505

4. Stop the vehicle and access ON BOARD SYSTEM READINESS menu of GENERIC OBD-II FUNCTION to verify the OBD monitoring status.
   - If completed, the OBD monitoring status items change from non-completed to completed.
   - If not completed, turn the ignition switch off then repeat from Step 3.
5. Access DIAGNOSTIC MONITORING TEST RESULTS menu of GENERIC OBD-II FUNCTIONS to verify the monitor results.
   - If detected values are not within the specification, repair has not been completed.
6. Verify no DTCs are available.

EVAP System Repair Verification Drive Mode

Note
- If "EVAP System Repair Verification Drive Mode" cannot be performed (it is impossible to drive the vehicle under this drive mode condition), perform the EVAP system test procedure as an alternative. (See 01–03B–80 ENGINE CONTROL SYSTEM OPERATION INSPECTION [L3 WITH TC].)

1. Verify that all of the following PIDs are within the following specifications. All PIDs must be within specifications before the engine is started to initiate the EVAP system test.
   - BARO: **above 72.2 kPa {542 mmHg, 21.3 inHg}**
   - IAT: **5—35 °C {41—95 °F}**
   - FTL: **15—85%**
   - B+: **above 10.9 V**
2. Clear the DTC from the PCM memory using the WDS or equivalent.
3. Turn the ignition switch off.
4. Leave the vehicle for **5 hours or more**.
5. Start the engine and idle it for **more than 5 min**.
6. Drive the vehicle at an engine speed of **65—80 km/h {40—50 mph}** for **more than 5 min**.
7. Stop the vehicle and the turn ignition switch off.
8. Leave vehicle as it is for **5.5 hours or more**.
9. Start the engine.
10. Access the ON BOARD SYSTEM READINESS to verify the OBD monitoring status.
    - If completed, the OBD monitoring status items change from non-completed to completed.
    - If not completed, turn the ignition switch off then go back to Step 1.
11. Access the DIAGNOSTIC MONITORING TEST RESULTS to verify the monitor results.
    - If detected values are not within specification, the repair has not been completed.
12. Verify that no DTCs are present.

PCM Adaptive Memory Production, EGR, HO2S heater, HO2S, TWC, and EVAP System Repair Verification Drive Mode

1. Start the engine and warm it up completely.
2. Clear the DTC from the PCM memory using the WDS or equivalent.
3. Verify the following conditions and correct if necessary:
   - All accessory loads (A/C, headlights, blower fan, rear window defroster) are off.
4. Verify that all of the following PIDs are within the following specifications. All PIDs must be within specifications from Step 5 to 6.
   - BARO: **above 72.2 kPa {542 mmHg, 21.3 inHg}**
   - IAT: **5—35 °C {41—95 °F}**
   - FTL: **15—85%**
   - B+: **above 10.9 V**
5. With the vehicle stopped, race the engine at the engine speed indicated, and then drive the vehicle as shown in the graph. The driving conditions before driving at constant speed are not specified. If possible, monitor RPM PID for engine speed during this procedure.

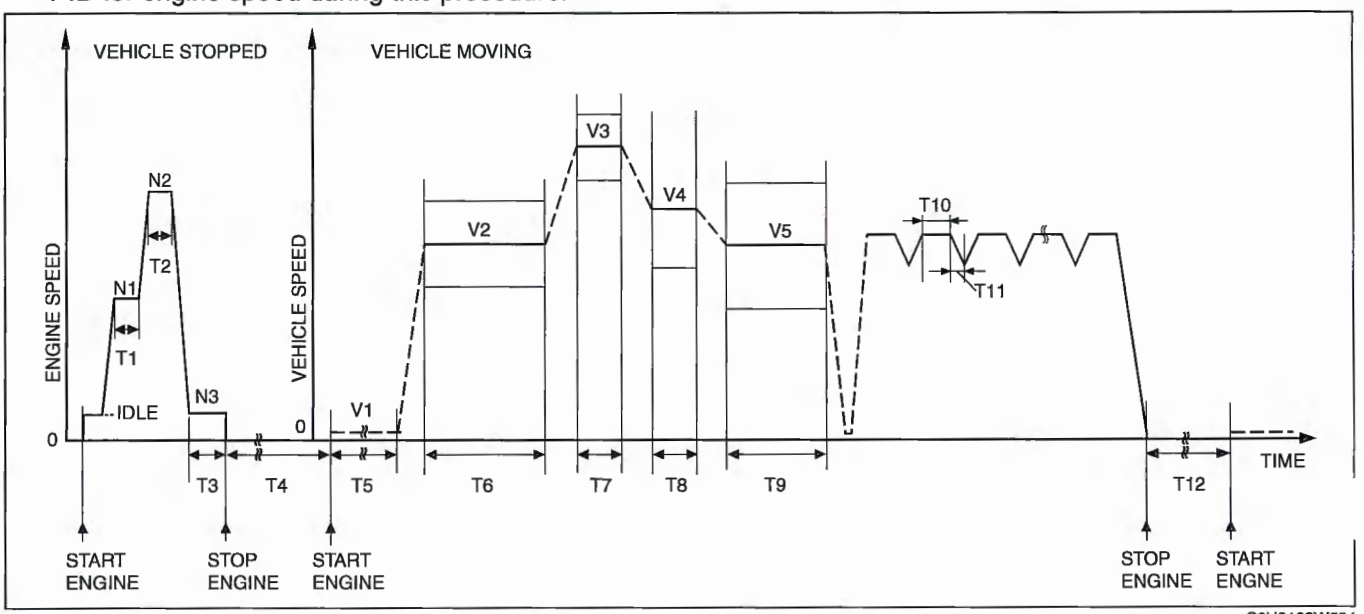

C6U0102W504

Step	Time	Engine speed (rpm)	Vehicle speed (km/h {mph})	Vehicle condition
1	T1: More than 15 s	N1: 2,500—3,500	0 {0}	—
2	T2: More than 15 s	N2: 4,500—5,000	0 {0}	—
3	T3: More than 60 s	N3: Idle	0 {0}	Idle the engine after the cooling fan has stopped
4	T4: More than 5 h	0	0 {0}	Keep the ignition switch off
5	T5: More than 5 min	Idle	V1: 0 {0}	—
6	T6: 5 min	—	V2: 65—80 {40—50}	6TH
7	T7: 1 min	—	V3: 79—91 {49—57}	6TH
8	T8: 1 min	—	V4: Above 89 {55}	6TH
9	T9: 3 min	—	V5: 72—88 {45—55}	6TH
10	T10: Approx. 10 s	Above 2,500	—	—
11	T11: Approx. 10 s	—	—	Decelerate by engine braking only (10 times)
12	T12: More than 5.5 h	0	0 {0}	Keep the ignition switch off

6. Turn the ignition switch off.
7. Access the ON BOARD SYSTEM READINESS to verify the OBD monitoring status.
   - If completed, all of the OBD monitoring status items change from non-completed to completed.
   - If not completed, turn the ignition switch off, then perform the applicable specific drive mode for any monitoring item that was not in the detection condition.
8. Access the DIAGNOSTIC MONITORING TEST RESULTS to verify the monitor results.
   - If detected values are not within specification, the repair has not been completed.

DIAGNOSTIC MONITORING TEST RESULTS [L3 WITH TC]

E6U010200000WE4

- The purpose of this test mode is to confirm the result of the OBD-II monitor diagnostic test results. The result values stored when a particular monitor is completed are displayed. If the monitor is not completed, the initial value is displayed.

TEST ID	Description	Related system
10: 01: 80	HO2S (Front) lean-to-rich response time (calculated)	HO2S
10: 02: 03	Low HO2S (Rear) voltage for switch time calculation (constant)	
10: 02: 04	High HO2S (Rear) voltage for switch time calculation (constant)	
10: 02: 05	HO2S (Rear) rich-to-lean response time (calculated)	
10: 21: 80	Front and HO2S (Rear) switching time ratio	Catalyst
10: 31: 83	EGR pressure variation	EGR
10: 3A: 80	EVAP system leak detection pump gross leak check	EVAP
10: 3B: 80	EVAP system leak detection pump small leak check	
10: 3C: 80*1	EVAP system leak detection pump very small leak check	
10: 3D: 80	Purge flow monitor	
10: A2: 0B	EWMA misfire counts for last 10 driving cycles	Misfire
10: A2: 0C	Misfire counts for last/current driving cycles	
10: A3: 0B	EWMA misfire counts for last 10 driving cycles	
10: A3: 0C	Misfire counts for last/current driving cycles	
10: A4: 0B	EWMA misfire counts for last 10 driving cycles	
10: A4: 0C	Misfire counts for last/current driving cycles	
10: A5: 0B	EWMA misfire counts for last 10 driving cycles	
10: A5: 0C	Misfire counts for last/current driving cycles	
10: E1: 80	Heat radiation ratio	Engine cooling system
10: E1: 81	Misfire counts for last/current driving cycles	

*1 : California emission regulation applicable model

DTC TABLE [L3 WITH TC]

E6U010200000WE5

×: Applicable
—: Not applicable

DTC No.	Condition	MIL	DC	Monitor item	Self-test type*2	Memory function	Page
P0011	CMP Timing over-advanced	ON	1	CCM	C, R	×	(See 01–02B–22 DTC P0011 [L3 WITH TC].)
P0012	CMP Timing over-retarded	ON	2	CCM	C, R	×	(See 01–02B–24 DTC P0012 [L3 WITH TC].)
P0016	CKP-CMP correlation	ON	2	CCM	C	×	(See 01–02B–26 DTC P0016 [L3 WITH TC].)
P0030	Front HO2S heater control circuit problem	ON	2	HO2S heater	C, O, R	×	(See 01–02B–28 DTC P0030 [L3 WITH TC].)
P0031	Front HO2S heater circuit low input	ON	2	HO2S heater	C, O, R	×	(See 01–02B–30 DTC P0031 [L3 WITH TC].)
P0032	Front HO2S heater circuit high input	ON	2	HO2S heater	C, O, R	×	(See 01–02B–32 DTC P0032 [L3 WITH TC].)
P0037	Rear HO2S heater circuit low input	ON	2	HO2S heater	C, O, R	×	(See 01–02B–34 DTC P0037 [L3 WITH TC].)
P0038	Rear HO2S heater circuit high input	ON	2	HO2S heater	C, O, R	×	(See 01–02B–36 DTC P0038 [L3 WITH TC].)
P0069	Manifold absolute pressure/ atmospheric pressure correlation	ON	2	CCM	C	×	(See 01–02B–38 DTC P0069 [L3 WITH TC
P0089	Fuel pressure regulator performance	OFF	1	Other	C, O, R	×	(See 01–02B–39 DTC P0089 [L3 WITH TC].)
P0091	Fuel pressure regulator control circuit low	ON	1	CCM	C, O, R	×	(See 01–02B–40 DTC P0091 [L3 WITH TC].)
P0092	Fuel pressure regulator control circuit high	ON	1	CCM	C, O, R	×	(See 01–02B–42 DTC P0092 [L3 WITH TC].)
P0096	IAT sensor 2 circuit range/ performance problem	ON	2	CCM	C	×	(See 01–02B–44 DTC P0096 [L3 WITH TC].)
P0097	IAT sensor 2 circuit low	ON	1	CCM	C, O, R	×	(See 01–02B–46 DTC P0097 [L3 WITH TC].)
P0098	IAT sensor 2 circuit high	ON	1	CCM	C, O, R	×	(See 01–02B–48 DTC P0098 [L3 WITH TC].)
P0101	MAF circuit range/performance problem	ON	2	CCM	C	×	(See 01–02B–50 DTC P0101 [L3 WITH TC].)
P0102	MAF circuit low input	ON	1	CCM	C, O, R	×	(See 01–02B–52 DTC P0102 [L3 WITH TC].)
P0103	MAF circuit high input	ON	1	CCM	C, O, R	×	(See 01–02B–54 DTC P0103 [L3 WITH TC].)
P0107	MAP sensor circuit low input	ON	1	CCM	C, O, R	×	(See 01–02B–56 DTC P01[[L3 WITH TC].)
P0108	MAP sensor circuit high input	ON	1	CCM	C, O, R	×	(See 01–02B–58 DTC P0108 [L3 WITH TC].)

DTC No.	Condition	MIL	DC	Monitor item	Self-test type*2	Memory function	Page
P0111	IAT circuit performance problem	ON	2	CCM	C	×	(See 01–02B–60 DTC P0111 [L3 WITH TC].)
P0112	IAT circuit low input	ON	1	CCM	C, O, R	×	(See 01–02B–61 DTC P0112 [L3 WITH TC].)
P0113	IAT circuit high input	ON	1	CCM	C, O, R	×	(See 01–02B–63 DTC P0113 [L3 WITH TC].)
P0116	ECT circuit range/performance problem	ON	1	Engine cooling system	C	×	(See 01–02B–65 DTC P0116 [L3 WITH TC].)
P0117	ECT circuit low input	ON	1	Engine cooling system	C, O, R	×	(See 01–02B–67 DTC P0117 [L3 WITH TC].)
P0118	ECT circuit high input	ON	1	Engine cooling system	C, O, R	×	(See 01–02B–69 DTC P0118 [L3 WITH TC].)
P0122	TP sensor No.1 circuit low input	ON	1	CCM	C, O, R	×	(See 01–02B–71 DTC P0122 [L3 WITH TC].)
P0123	TP sensor No.1 circuit high input	ON	1	CCM	C, O, R	×	(See 01–02B–73 DTC P0123 [L3 WITH TC].)
P0125	Excessive time to enter closed loop fuel control	ON	2	Engine cooling system	C	×	(See 01–02B–75 DTC P0125 [L3 WITH TC].)
P0126	Coolant thermostat stuck open	ON	2	Engine cooling system	C	×	(See 01–02B–77 DTC P0126, P0128 [L3 WITH TC].)
P0128	Coolant thermostat stuck open	ON	2	Engine cooling system	C	×	(See 01–02B–77 DTC P0126, P0128 [L3 WITH TC].)
P0131	Front HO2S circuit low input	ON	2	HO2S	C, O, R	×	(See 01–02B–80 DTC P0131 [L3 WITH TC].)
P0132	Front HO2S circuit high input	ON	2	HO2S	C, O, R	×	(See 01–02B–82 DTC P0132 [L3 WITH TC].)
P0133	Front HO2S circuit problem	ON	2	HO2S	C	×	(See 01–02B–84 DTC P0133 [L3 WITH TC].)
P0134	Front HO2S circuit no activity detected	ON	2	HO2S	C, R	×	(See 01–02B–86 DTC P0134 [L3 WITH TC].)
P0137	Rear HO2S circuit low input	ON	2	HO2S	C, O, R	×	(See 01–02B–89 DTC P0137 [L3 WITH TC].)
P0138	Rear HO2S circuit high input	ON	2	HO2S	C, O, R	×	(See 01–02B–91 DTC P0138 [L3 WITH TC].)
P0139	Rear HO2S circuit malfunction	ON	2	HO2S	C	×	(See 01–02B–93 DTC P0139 [L3 WITH TC].)
P0140	Rear HO2S circuit no activity detected	ON	2	HO2S	C, R	×	(See 01–02B–96 DTC P0140 [L3 WITH TC].)
P0192	Fuel rail pressure sensor circuit low input	ON	1	CCM	C, O, R	×	(See 01–02B–98 DTC P0192 [L3 WITH TC].)

DTC No.	Condition	MIL	DC	Monitor item	Self-test type*2	Memory function	Page
P0193	Fuel rail pressure sensor circuit high input	ON	1	CCM	C, O, R	×	(See 01–02B–100 DTC P0193 [L3 WITH TC].)
P0201	Injector circuit/open cylinder No.1	ON	1	CCM	C, R	×	(See 01–02B–102 DTC P0201 [L3 WITH TC].)
P0202	Injector circuit/open cylinder No.2	ON	1	CCM	C, R	×	(See 01–02B–104 DTC P0202 [L3 WITH TC].)
P0203	Injector circuit/open cylinder No.3	ON	1	CCM	C, R	×	(See 01–02B–106 DTC P0203 [L3 WITH TC].)
P0204	Injector circuit/open cylinder No.4	ON	1	CCM	C, R	×	(See 01–02B–108 DTC P0204 [L3 WITH TC].)
P0222	TP sensor No.2 circuit low input	ON	1	CCM	C, O, R	×	(See 01–02B–110 DTC P0222 [L3 WITH TC].)
P0223	TP sensor No.2 circuit high input	ON	1	CCM	C, O, R	×	(See 01–02B–112 DTC P0223 [L3 WITH TC].)
P0234	Turbo/supercharger overboost condition	OFF	1	Other	C, R	×	(See 01–02B–114 DTC P0234 [L3 WITH TC].)
P0245	Turbocharger wastegate solenoid low	OFF	2	Other	C, O, R	×	(See 01–02B–115 DTC P0245 [L3 WITH TC].)
P0246	Turbocharger wastegate solenoid high	OFF	2	Other	C, O, R	×	(See 01–02B–116 DTC P0246 [L3 WITH TC].)
P0300	Random misfire detected	Flash / ON	1 or 2	Misfire	C, R	×	(See 01–02B–118 DTC P0300 [L3 WITH TC].)
P0301	Cylinder No.1 misfire detected	Flash / ON	1 or 2	Misfire	C, R	×	(See 01–02B–122 DTC P0301, P0302, P0303, P0304 [L3 WITH TC].)
P0302	Cylinder No.2 misfire detected	Flash / ON	1 or 2	Misfire	C, R	×	(See 01–02B–122 DTC P0301, P0302, P0303, P0304 [L3 WITH TC].)
P0303	Cylinder No.3 misfire detected	Flash / ON	1 or 2	Misfire	C, R	×	(See 01–02B–122 DTC P0301, P0302, P0303, P0304 [L3 WITH TC].)
P0304	Cylinder No.4 misfire detected	Flash / ON	1 or 2	Misfire	C, R	×	(See 01–02B–122 DTC P0301, P0302, P0303, P0304 [L3 WITH TC].)

DTC No.	Condition	MIL	DC	Monitor item	Self-test type*2	Memory function	Page
P0327	Knock sensor circuit low input	ON	1	CCM	C, O, R	×	(See 01–02B–124 DTC P0327 [L3 WITH TC].)
P0328	Knock sensor circuit high input	ON	1	CCM	C, O, R	×	(See 01–02B–126 DTC P0328 [L3 WITH TC].)
P0335	CKP sensor circuit malfunction	ON	1	CCM	C	×	(See 01–02B–128 DTC P0335 [L3 WITH TC].)
P0340	CMP sensor circuit malfunction	ON	1	CCM	C	×	(See 01–02B–131 DTC P0340 [L3 WITH TC].)
P0401	EGR flow insufficient detected	ON	2	EGR	C, R	×	(See 01–02B–134 DTC P0401 [L3 WITH TC].)
P0403	EGR valve (stepper motor) circuit malfunction	ON	2	CCM	C, O, R	×	(See 01–02B–136 DTC P0403 [L3 WITH TC].)
P0421	Catalyst system efficiency below threshold	ON	2	Catalyst	C	×	(See 01–02B–138 DTC P0421 [L3 WITH TC].)
P0441	EVAP control system incorrect purge flow	ON	2	EVAP system monitor	C, R	×	(See 01–02B–140 DTC P0441 [L3 WITH TC].)
P0442	EVAP control system leak detected (small leak)	ON	2	EVAP system monitor	C, R	×	(See 01–02B–142 DTC P0442 [L3 WITH TC].)
P0443	EVAP control system purge control valve circuit malfunction	ON	2	CCM	C, O, R	×	(See 01–02B–144 DTC P0443 [L3 WITH TC].)
P0446	Change over valve (COV) (EVAP system leak detection pump) stuck close	ON	2	CCM	C, R	×	(See 01–02B–146 DTC P0446 [L3 WITH TC].)
P0455	EVAP control system leak detected (gross leak)	ON	2	EVAP system monitor	C, R	×	(See 01–02B–148 DTC P0455 [L3 WITH TC].)
P0456*1	EVAP control system leak detected (very small leak)	ON	2	EVAP system monitor	C, R	×	(See 01–02B–150 DTC P0456 [L3 WITH TC].)
P0461	Fuel gauge sender unit circuit range/ performance	ON	2	CCM	C	×	(See 01–02B–152 DTC P0461 [L3 WITH TC].)
P0462	Fuel gauge sender unit circuit low input	ON	2	CCM	C, O, R	×	(See 01–02B–153 DTC P0462 [L3 WITH TC].)
P0463	Fuel gauge sender unit circuit high input	ON	2	CCM	C, O, R	×	(See 01–02B–154 DTC P0463 [L3 WITH TC].)

DTC No.	Condition	MIL	DC	Monitor item	Self-test type*2	Memory function	Page
P0480	Fan relay No.1 control circuit malfunction	OFF	1	Other	C, O, R	×	(See 01–02B–155 DTC P0480 [L3 WITH TC].)
P0500	Vehicle speed sensor (VSS) circuit malfunction	ON	2	CCM	C	×	(See 01–02B–157 DTC P0500 [L3 WITH TC].)
P0505	Idle control system malfunction	OFF	–	–	R	–	(See 01–02B–158 DTC P0505 [L3 WITH TC].)
P0506	Idle control system RPM lower than expected	ON	2	CCM	C	×	(See 01–02B–160 DTC P0506 [L3 WITH TC].)
P0507	Idle control system RPM higher than expected	ON	2	CCM	C	×	(See 01–02B–162 DTC P0507 [L3 WITH TC].)
P0550	PSP switch circuit malfunction	ON	2	CCM	C	×	(See 01–02B–164 DTC P0550 [L3 WITH TC].)
P0564	Cruise control switch circuit malfunction	OFF	1	Other	C	×	(See 01–02B–166 DTC P0564 [L3 WITH TC].)
P0571	Brake switch circuit malfunction	OFF	1	Other	C	×	(See 01–02B–168 DTC P0571 [L3 WITH TC].)
P0601	Internal control module memory check sum error	ON	1	CCM	C, O, R	×	(See 01–02B–170 DTC P0601 [L3 WITH TC].)
P0602	PCM programming error	ON	1	CCM	C, O, R	×	(See 01–02B–171 DTC P0602 [L3 WITH TC].)
P0604	PCM RAM error	ON	1	CCM	C, O, R	×	(See 01–02B–172 DTC P0604 [L3 WITH TC].)
P0606	PCM processor	ON	1	CCM	C, O, R	×	(See 01–02B–173 DTC P0606 [L3 WITH TC].)
P0607	Control module performance	OFF	1	Other	C, O, R	×	(See 01–02B–174 DTC P0607 [L3 WITH TC].)
P0610	Control module vehicle options error	ON	1	CCM	C, O, R	×	(See 01–02B–175 DTC P0610 [L3 WITH TC].)
P0611	Fuel injector control module performance	OFF	1	Other	C, O, R	×	(See 01–02B–176 DTC P0611 [L3 WITH TC].)
P0638	Throttle actuator control range/ performance	ON	1	CCM	C	×	(See 01–02B–178 DTC P0638 [L3 WITH TC].)

DTC No.	Condition	MIL	DC	Monitor item	Self-test type*2	Memory function	Page
P0703	Brake switch No.1 circuit malfunction	ON	2	CCM	C	×	(See 01–02B–179 DTC P0703 [L3 WITH TC].)
P0704	Clutch switch circuit malfunction	ON	2	CCM	C	×	(See 01–02B–182 DTC P0704 [L3 WITH TC].)
P0850	Neutral switch circuit malfunction	ON	2	CCM	C	×	(See 01–02B–185 DTC P0850 [L3 WITH TC].)
P2004	Variable swirl control system shutter valve stuck open	ON	2	CCM	C, R	×	(See 01–02B–188 DTC P2004 [L3 WITH TC].)
P2006	Variable swirl control system shutter valve stuck closed	ON	2	CCM	C, R	×	(See 01–02B–191 DTC P2006 [L3 WITH TC].)
P2009	Variable swirl solenoid valve control circuit low	ON	2	CCM	C, O, R	×	(See 01–02B–194 DTC P2009 [L3 WITH TC].)
P2010	Variable swirl solenoid valve control circuit high	ON	2	CCM	C, O, R	×	(See 01–02B–196 DTC P2010 [L3 WITH TC].)
P2088	OCV actuator circuit low	ON	1	CCM	C, O, R	×	(See 01–02B–198 DTC P2088 [L3 WITH TC].)
P2089	OCV actuator circuit high	ON	1	CCM	C, O, R	×	(See 01–02B–200 DTC P2089 [L3 WITH TC].)
P2096	Target A/F feedback system too lean	ON	2	Fuel system	C	×	(See 01–02B–202 DTC P2096 [L3 WITH TC].)
P2097	Target A/F feedback system too rich	ON	2	Fuel system	C	×	(See 01–02B–205 DTC P2097 [L3 WITH TC].)
P2100	Throttle actuator circuit open	ON	1	CCM	C, O, R	×	(See 01–02B–208 DTC P2100 [L3 WITH TC].)
P2101	Throttle actuator circuit range/ performance	ON	1	CCM	C, R	×	(See 01–02B–210 DTC P2101 [L3 WITH TC].)
P2102	Throttle actuator circuit low input	ON	1	CCM	C, O, R	×	(See 01–02B–214 DTC P2102 [L3 WITH TC].)
P2103	Throttle actuator circuit high input	ON	1	CCM	C, O, R	×	(See 01–02B–216 DTC P2103 [L3 WITH TC].)
P2107	Throttle actuator control module processor problem	ON	1	CCM	C, R	×	(See 01–02B–218 DTC P2107 [L3 WITH TC].)

DTC No.	Condition	MIL	DC	Monitor item	Self-test type*2	Memory function	Page
P2108	Throttle actuator control module performance problem	ON	1	CCM	C, R	×	(See 01–02B–218 DTC P2108 [L3 WITH TC].)
P2119	Throttle actuator control throttle body range/performance	ON	1	CCM	C, R	×	(See 01–02B–220 DTC P2119 [L3 WITH TC].)
P2122	Accelerator pedal position (APP) sensor No.1 circuit low input	ON	1	CCM	C, O, R	×	(See 01–02B–221 DTC P2122 [L3 WITH TC].)
P2123	Accelerator pedal position (APP) sensor No.1 circuit high input	ON	1	CCM	C, O, R	×	(See 01–02B–223 DTC P2123 [L3 WITH TC].)
P2127	Accelerator pedal position (APP) sensor No.2 circuit low input	ON	1	CCM	C, O, R	×	(See 01–02B–225 DTC P2127 [L3 WITH TC].)
P2128	Accelerator pedal position (APP) sensor No.2 circuit high input	ON	1	CCM	C, O, R	×	(See 01–02B–227 DTC P2128 [L3 WITH TC].)
P2135	Throttle position sensor No.1/No.2 voltage correlation problem	ON	1	CCM	C, O, R	×	(See 01–02B–229 DTC P2135 [L3 WITH TC].)
P2138	Accelerator pedal position (APP) sensor No.1/No.2 voltage correlation problem	ON	1	CCM	C, O, R	×	(See 01–02B–230 DTC P2138 [L3 WITH TC].)
P2177	Fuel system too lean at off idle	ON	2	Fuel system	C, R	×	(See 01–02B–231 DTC P2177 [L3 WITH TC].)
P2178	Fuel system too rich at off idle	ON	2	Fuel system	C, R	×	(See 01–02B–234 DTC P2178 [L3 WITH TC].)
P2187	Fuel system too lean at idle	ON	2	Fuel system	C, R	×	(See 01–02B–237 DTC P2187 [L3 WITH TC].)
P2188	Fuel system too rich at idle	ON	2	Fuel system	C, R	×	(See 01–02B–240 DTC P2188 [L3 WITH TC].)
P2195	Front HO2S signal stuck lean	ON	2	HO2S	C	×	(See 01–02B–243 DTC P2195 [L3 WITH TC].)
P2196	Front HO2S signal stuck rich	ON	2	HO2S	C	×	(See 01–02B–245 DTC P2196 [L3 WITH TC].)
P2228	BARO sensor circuit low input	ON	1	CCM	C, O, R	×	(See 01–02B–248 DTC P2228 [L3 WITH TC].)
P2229	BARO sensor circuit high input	ON	1	CCM	C, O, R	×	(See 01–02B–249 DTC P2229 [L3 WITH TC].)

DTC No.	Condition	MIL	DC	Monitor item	Self-test type*2	Memory function	Page
'2237	Front HO2S positive current control circuit open	ON	2	HO2S	C, O, R	×	(See 01–02B–250 DTC P2237 [L3 WITH TC].)
P2245	Front HO2S sensor reference voltage circuit low input	ON	2	HO2S	C, O, R	×	(See 01–02B–252 DTC P2245 [L3 WITH TC].)
P2246	Front HO2S sensor reference voltage circuit high input	ON	2	HO2S	C, O, R	×	(See 01–02B–254 DTC P2246 [L3 WITH TC].)
P2251	Front HO2S negative current control circuit open	ON	2	HO2S	C, O, R	×	(See 01–02B–256 DTC P2251 [L3 WITH TC].)
P2401	EVAP system leak detection pump motor circuit low	ON	2	CCM	C, R	×	(See 01–02B–258 DTC P2401 [L3 WITH TC].)
P2402	EVAP system leak detection pump motor circuit high	ON	2	CCM	C, R	×	(See 01–02B–261 DTC P2402 [L3 WITH TC].)
P2404	EVAP system leak detection pump sensor circuit malfunction	ON	2	CCM	C, R	×	(See 01–02B–263 DTC P2404 [L3 WITH TC].)
P2405	EVAP system leak detection pump sensor circuit low input	ON	2	CCM	C, R	×	(See 01–02B–264 DTC P2405 [L3 WITH TC].)
P2407	EVAP system leak detection pump sensor circuit intermittent	ON	2	CCM	C, R	×	(See 01–02B–265 DTC P2407 [L3 WITH TC].)
P2502	Generator terminal B circuit open	OFF	1	–	C, R	×	(See 01–02B–266 DTC P2502 [L3 WITH TC].)
P2503	Generator output voltage signal no electricity	OFF	1	Other	C, R	×	(See 01–02B–268 DTC P2503 [L3 WITH TC].)
P2504	Battery overcharge	OFF	1	Other	C, R	×	(See 01–02B–270 DTC P2504 [L3 WITH TC].)
P2507	PCM +BB (back-up battery) voltage low	ON	1	CCM	C, O, R	×	(See 01–02B–272 DTC P2507 [L3 WITH TC].)
P2610	PCM internal engine off timer performance	ON	2	CCM	C	×	(See 01–02B–274 DTC P2610 [L3 WITH TC].)
U0073	CAN system communication error	(See 09–02B–4 DTC TABLE [MULTIPLEX COMMUNICATION SYSTEM (L3 WITH TC)])					
U0121	Communication error to ABS HU/CM	(See 09–02B–4 DTC TABLE [MULTIPLEX COMMUNICATION SYSTEM (L3 WITH TC)])					
J0155	Communication error to instrument cluster	(See 09–02B–4 DTC TABLE [MULTIPLEX COMMUNICATION SYSTEM (L3 WITH TC)])					

*1 : California emission regulation applicable model
*2 : C; CMDTC self-test, O; KOEO self-test, R; KOER self-test

DTC P0011 [L3 WITH TC]

E6U010200001W16

DTC P0011	CMP Timing over-advanced
DETECTION CONDITION	• Actual valve timing is over-advanced by **17 °** (when the following conditions are met) from the target valve timing when the OCV is controlled at the maximum valve timing retard condition. **MONITORING CONDITION** — Engine speed is **below 4,000 rpm**. — Engine coolant temperature is **above 70—110 °C {158—230 °F}**. **Diagnostic support note** • This is a continuous monitor (CCM). • MIL illuminates if the PCM detects the above malfunction condition during the first drive cycle. • FREEZE FRAME DATA is available. • DTCs are stored in the PCM memory.
POSSIBLE CAUSE	• OCV malfunction • Spool valve in the OCV is stuck in the advance position. • Variable valve timing actuator is stuck in the advance position. • Loose timing chain or improper valve timing due to timing chain slippage • PCM malfunction

Diagnostic procedure

STEP	INSPECTION		ACTION
1	**VERIFY FREEZE FRAME DATA HAS BEEN RECORDED** • Has the FREEZE FRAME DATA been recorded?	Yes	Go to the next step.
		No	Record FREEZE FRAME DATA on the repair order, then go to the next step.
2	**VERIFY RELATED REPAIR INFORMATION AVAILABILITY** • Check for related Service Bulletins and/or on-line repair information availability. • Is any related repair information available?	Yes	Perform the repair or diagnosis according to the available repair information. • If the vehicle is not repaired, go to the next step.
		No	Go to the next step.
3	**INSPECT OCV FOR MALFUNCTION** • Start the engine. • Increase the engine speed. • Stop the engine. • Remove the OCV. • Inspect the position of the spool valve in the OCV. • Is the spool valve located at the valve retard position?	Yes	Go to the next step.
		No	Replace the OCV, then go to Step 6.
4	**INSPECT STOPPER PIN MECHANISM** • Remove the timing chain. • Inspect the stopper pin. (See 01–10B–37 VARIABLE VALVE TIMING ACTUATOR INSPECTION [L3 WITH TC].) • Is the stopper pin mechanism normal?	Yes	Go to the next step.
		No	Replace the variable valve timing actuator, then go to Step 6.
5	**INSPECT ROTOR POSITION** • Remove the variable valve timing actuator. • Is the rotor position at the maximum valve timing retard?	Yes	**VARIABLE VALVE TIMING MECHANISM IS NORMAL** **Note** • This DTC is detected as an intermittent concern. • The intermittent concern might be removed using the cleaning mode of the variable valve timing control function. Go to the next step.
		No	Replace the variable valve timing actuator, go to the next step.
6	**VERIFY TROUBLESHOOTING OF DTC P0011 COMPLETED** • Make sure to reconnect all the disconnected connectors. • Clear the DTC from the PCM memory using the WDS or equivalent. • Turn the ignition switch off. • Start the engine and warm it up completely. • Is PENDING CODE for this DTC present?	Yes	Replace the PCM, then go to the next step. (See 01–40B–6 PCM REMOVAL/INSTALLATION [L3 WITH TC].)
		No	Go to the next step.
7	**VERIFY AFTER REPAIR PROCEDURE** • Perform the "After Repair Procedure". (See 01–02B–8 AFTER REPAIR PROCEDURE [L3 WITH TC].) • Are any DTCs present?	Yes	Go to the applicable DTC inspection. (See 01–02B–14 DTC TABLE [L3 WITH TC].)
		No	Troubleshooting completed.

DTC P0012 [L3 WITH TC]

E6U010200001W17

DTC P0012	CMP Timing over-retarded
DETECTION CONDITION	• Actual valve timing is over-retarded by **5 °** (when the following conditions are met) from the target valve timing for **5 s** when the OCV system control is within the feed-back range. **MONITORING CONDITION** — Engine speed is **below 4,000 rpm**. — Engine coolant temperature is **above 70—110 °C {158—230 °F}**. **Diagnostic support note** • This is a continuous monitor (CCM). • MIL illuminates if the PCM detects the above malfunction condition in two consecutive drive cycles or in one drive cycle while the DTC for the same malfunction has been stored in the PCM. • PENDING CODE is available if the PCM detects the above malfunction condition during the first drive cycle. • FREEZE FRAME DATA is available. • DTCs are stored in the PCM memory.
POSSIBLE CAUSE	• OCV (oil control valve) malfunction • Low engine oil pressure • Spool valve in OCV (oil control valve) is stuck in the retard position. • Variable valve timing actuator is stuck in the retard position. • Following oil runners are clogged or have leakage. **Oil runners** • Between oil pressure switch and OCV (oil control valve) • Between OCV (oil control valve) and variable valve timing actuator • In variable valve timing actuator • Loose timing chain or improper valve timing due to timing chain slippage • PCM malfunction

Diagnostic procedure

STEP	INSPECTION		ACTION
1	**VERIFY FREEZE FRAME DATA HAS BEEN RECORDED** • Has the FREEZE FRAME DATA been recorded?	Yes	Go to the next step.
		No	Record FREEZE FRAME DATA on the repair order, then go to the next step.
2	**VERIFY RELATED REPAIR INFORMATION AVAILABILITY** • Check for related Service Bulletins and/or on-line repair information availability. • Is any related repair information available?	Yes	Perform the repair or diagnosis according to the available repair information. • If the vehicle is not repaired, go to the next step.
		No	Go to the next step.
3	**VERIFY RELATED PENDING CODE OR STORED DTCS** • Is DTC P2088 or P2089 present?	Yes	Go to the appropriate DTC troubleshooting procedure. (See 01–02B–198 DTC P2088 [L3 WITH TC] or 01–02B–200 DTC P2089 [L3 WITH TC].)
		No	Go to the next step.
4	**VERIFY ENGINE OIL PRESSURE** • Start the engine. • Does the oil pressure warning light illuminate?	Yes	Inspect engine oil pressure. (See 01–11B–3 OIL PRESSURE INSPECTION [L3 WITH TC].)
		No	Go to the next step.
5	**VERIFY TIMING CHAIN INSTALLATION** • Stop the engine. • Remove the timing chain cover. • Is the camshaft timing mark at the correct point? (See 01–10B–10 TIMING CHAIN REMOVAL/INSTALLATION [L3 WITH TC].)	Yes	Go to the next step.
		No	Reinstall the timing chain, then go to Step 8.
6	**INSPECT OCV FOR MALFUNCTION** • Stop the engine. • Remove the OCV. • Inspect the position of the spool valve in the OCV. • Is the spool valve located at the valve retard position?	Yes	**VARIABLE VALVE TIMING MECHANISM IS NORMAL** **Note** • This DTC is detected as an intermittent concern. • The intermittent concern might be removed using the cleaning mode of the variable valve timing control function. Go to the next step.
		No	Replace the OCV, then go to Step 8.
7	**INSPECT ENGINE OIL RUNNER** • Inspect the following engine oil runners for clogging or leakage. — Between the oil pressure switch and the OCV — Between the OCV and the variable valve timing actuator — In the variable valve timing actuator • Is there any clogging or leakage?	Yes	Repair or replace the suspected runner, then go to the next step.
		No	**VARIABLE VALVE TIMING MECHANISM IS NORMAL** **Note** • This DTC is detected as an intermittent concern. • The intermittent concern might be removed using the cleaning mode of the variable valve timing control function. Go to the next step.
8	**VERIFY TROUBLESHOOTING OF DTC P0012 COMPLETED** • Make sure to reconnect all disconnected connectors. • Clear the DTC from the PCM memory using the WDS or equivalent. • Turn the ignition switch off. • Start the engine and warm it up completely. • Is PENDING CODE for this DTC present?	Yes	Replace the PCM, then go to the next step. (See 01–40B–6 PCM REMOVAL/INSTALLATION [L3 WITH TC].)
		No	Go to the next step.
9	**VERIFY AFTER REPAIR PROCEDURE** • Perform the "After Repair Procedure". (See 01–02B–8 AFTER REPAIR PROCEDURE [L3 WITH TC].) • Are any DTCs present?	Yes	Go to the applicable DTC inspection. (See 01–02B–14 DTC TABLE [L3 WITH TC].)
		No	Troubleshooting completed.

DTC P0016 [L3 WITH TC]

E6U010200001W18

DTC P0016	CKP-CMP correlation
DETECTION CONDITION	• The PCM monitors the input pulses from the CKP sensor and CMP sensor. If the input pulse pick-up timing do not match each other, the PCM determines that the camshaft position does not coincide with the crankshaft position. **Diagnostic support note** • This is a continuous monitor (CCM). • The MIL illuminates if the PCM detects the above malfunction condition in two consecutive drive cycles or in one drive cycle while the DTC for the same malfunction has been stored in the PCM. • PENDING CODE is available if the PCM detects the above malfunction condition during the first drive cycle. • FREEZE FRAME DATA is available. • DTCs are stored in the PCM memory.
POSSIBLE CAUSE	• Poor connection of connector • CMP sensor malfunction • CKP sensor malfunction • Damaged or scratched CMP sensor pulse wheel • Damaged or scratched CKP sensor pulse wheel • Foreign material on CMP sensor • Foreign material on CKP sensor • Improper valve timing

Diagnostic procedure

STEP	INSPECTION		ACTION
1	**VERIFY FREEZE FRAME DATA HAS BEEN RECORDED** • Has the FREEZE FRAME DATA been recorded?	Yes	Go to the next step.
		No	Record the FREEZE FRAME DATA on the repair order, then go to the next step.
2	**VERIFY RELATED REPAIR INFORMATION AVAILABILITY** • Verify related Service Bulletins and/or on-line repair information availability. • Is any related repair information available?	Yes	Perform the repair or diagnosis according to the available repair information. • If the vehicle is not repaired, go to the next step.
		No	Go to the next step.
3	**INSPECT CMP SENSOR CONNECTOR FOR POOR CONNECTION** • Turn the ignition switch off. • Disconnect the CMP sensor connector. • Inspect for poor connection (such as damaged/ pulled-out pins, corrosion). • Is there any malfunction?	Yes	Repair or replace the terminal, then go to Step 13.
		No	Go to the next step.
4	**INSPECT CMP SENSOR FOR FOREIGN MATERIAL** • Remove the CMP sensor. • Inspect the CMP sensor for foreign material. • Is there any foreign material on the CMP sensor?	Yes	Remove foreign material from the CMP sensor, then go to Step 13.
		No	Go to the next step.
5	**INSPECT CMP SENSOR PULSE WHEEL** • Visually inspect the CMP sensor pulse wheel. • Is there any damage or scratching to the CMP sensor pulse wheel?	Yes	Replace the camshaft, then go to Step 13. (See 01–10B–20 CYLINDER HEAD GASKET REPLACEMENT [L3 WITH TC].)
		No	Go to the next step.
6	**INSPECT CMP SENSOR** • Inspect the CMP sensor. (See 01–40B–36 CAMSHAFT POSITION (CMP) SENSOR INSPECTION [L3 WITH TC].) • Is the CMP sensor normal?	Yes	Go to the next step.
		No	Replace the CMP, then go to Step 13.
7	**INSPECT CKP SENSOR CONNECTOR FOR POOR CONNECTION** • Turn the ignition switch off. • Disconnect the CKP sensor connector. • Inspect for poor connection (such as damaged/ pulled-out pins, corrosion). • Is there any malfunction?	Yes	Repair or replace the terminal, then go to Step 13.
		No	Go to the next step.

STEP	INSPECTION		ACTION
8	**INSPECT CKP SENSOR FOR FOREIGN MATERIAL** • Remove the CKP sensor. • Inspect the CKP sensor for foreign material. • Is there any foreign material on the CKP sensor?	Yes	Remove foreign material from the CKP sensor, then go to Step 13.
		No	Go to the next step.
9	**INSPECT CKP SENSOR PULSE WHEEL** • Visually inspect the CKP sensor pulse wheel. • Is there any damage or scratching to the CKP sensor pulse wheel?	Yes	Replace the CKP sensor pulse wheel, then go to Step 13. (See 01–10B–10 TIMING CHAIN REMOVAL/ INSTALLATION [L3 WITH TC].)
		No	Go to the next step.
10	**INSPECT CKP SENSOR** • Inspect the CKP sensor. (See 01–40B–38 CRANKSHAFT POSITION (CKP) SENSOR INSPECTION [L3 WITH TC].) • Is the CKP sensor normal?	Yes	Go to the next step.
		No	Replace the CKP sensor, then go to Step 13. (See 01–40B–41 CRANKSHAFT POSITION (CKP) SENSOR REMOVAL/INSTALLATION [L3 WITH TC].)
11	**INSPECT PCM CONNECTOR FOR POOR CONNECTION** • Turn the ignition switch off. • Disconnect the PCM sensor connector. • Inspect for poor connection (such as damaged/ pulled-out pins, corrosion). • Is there any malfunction?	Yes	Repair or replace the terminal, then go to Step 13.
		No	Go to the next step.
12	**INSPECT VALVE TIMING** • Inspect valve timing. (See 01–10B–10 TIMING CHAIN REMOVAL/ INSTALLATION [L3 WITH TC].) • Is valve timing normal?	Yes	Go to the next step.
		No	Adjust the valve timing properly, then go to the next step. (See 01–10B–10 TIMING CHAIN REMOVAL/ INSTALLATION [L3 WITH TC].)
13	**VERIFY TROUBLESHOOTING OF DTC P0016 COMPLETED** • Make sure to reconnect all disconnected connectors. • Turn the ignition switch to the ON position. • Clear the DTC from the PCM memory using the WDS or equivalent. • Start the engine. • Is the same DTC present?	Yes	Replace the PCM, then go to the next step. (See 01–40B–6 PCM REMOVAL/INSTALLATION [L3 WITH TC].)
		No	Go to the next step.
14	**VERIFY AFTER REPAIR PROCEDURE** • Perform "AFTER REPAIR PROCEDURE". (See 01–02B–8 AFTER REPAIR PROCEDURE [L3 WITH TC].) • Are any DTCs present?	Yes	Go to the applicable DTC inspection. (See 01–02B–14 DTC TABLE [L3 WITH TC].)
		No	DTC troubleshooting completed.

DTC P0030 [L3 WITH TC]

E6U010200001W19

DTC P0030	Front HO2S heater control circuit problem
DETECTION CONDITION	• OBD system monitors the output signal voltage from oxygen sensor which is in proportion to the element impedance of oxygen sensor. If the output signal voltage is not between **0.75 V** and **1.5 V** after specified time from engine start, heater performance is considered failed. **Monitoring condition** • **74 s** elapsed from engine start • Battery voltage: **10—18 V** **Diagnostic support note** • This is an intermittent monitor (HO2S heater). • The MIL illuminates if the PCM detects the above malfunction condition in two consecutive drive cycles or in one drive cycle while the DTC for the same malfunction has been stored in the PCM. • PENDING CODE is available if the PCM detects the above malfunction condition during the first drive cycle. • FREEZE FRAME DATA is available. • DTCs are stored in the PCM memory.
POSSIBLE CAUSE	• Front HO2S heater malfunction • Connector or terminal malfunction • Open circuit in wiring harness between front HO2S heater terminal 2D and PCM terminal 4AD • Short to ground in the wiring harness between front HO2S heater terminal 2D and PCM terminal 4AD • Short to power supply in the wiring harness between front HO2S heater terminal 2D and PCM terminal 4AD • Open circuit in the wiring harness between front HO2S heater terminal 1B and PCM terminal 2G • PCM malfunction

Diagnostic procedure

STEP	INSPECTION		ACTION
1	**VERIFY FREEZE FRAME DATA AND DIAGNOSTIC MONITORING TEST RESULTS HAVE BEEN RECORDED** • Have the FREEZE FRAME DATA and DIAGNOSTIC MONITORING TEST RESULTS (HO2S heater related) been recorded?	Yes	Go to the next step.
		No	Record the FREEZE FRAME DATA and DIAGNOSTIC MONITORING TEST RESULTS on the repair order, then go to the next step.
2	**VERIFY RELATED REPAIR INFORMATION AVAILABILITY** • Verify related Service Bulletins and/or on-line repair information availability. • Is any related repair information available?	Yes	Perform the repair or diagnosis according to the available repair information. • If the vehicle is not repaired, go to the next step.
		No	Go to the next step.
3	**VERIFY RELATED PENDING CODE OR STORED DTCs** • Turn the ignition switch off, then to the ON position (Engine off). • Verify the related PENDING CODE or stored DTCs using the WDS or equivalent. • Is DTC P0031 or P0032 also present?	Yes	Go to appropriate DTC troubleshooting procedure. (See 01–02B–14 DTC TABLE [L3 WITH TC].)
		No	Go to the next step.
4	**IDENTIFY TRIGGER DTC FOR FREEZE FRAME DATA** • Is DTC P0030 on FREEZE FRAME DATA?	Yes	Go to the next step.
		No	Go to troubleshooting for DTC on FREEZE FRAME DATA. (See01–02B–14 DTC TABLE [L3 WITH TC].)
5	**INSPECT FRONT HO2S CONNECTOR FOR POOR CONNECTION** • Turn the ignition switch off. • Disconnect the front HO2S connector. • Inspect for poor connection (such as damaged/ pulled-out pins, and corrosion). • Is there any malfunction?	Yes	Repair or replace the terminal, then go to Step 8.
		No	Go to the next step.
6	**INSPECT FRONT HO2S HEATER** • Inspect the front HO2S heater. (See 01–40B–42 HEATED OXYGEN SENSOR (HO2S) INSPECTION [L3 WITH TC].) • Is there any malfunction?	Yes	Replace the front HO2S, then go to Step 8. (See 01–15B–3 HO2S Removal Note.)
		No	Go to the next step.
7	**INSPECT PCM CONNECTOR FOR POOR CONNECTION** • Turn the ignition switch off. • Disconnect the PCM connector. • Inspect for poor connection (such as damaged/ pulled-out pins, and corrosion). • Is there any malfunction?	Yes	Repair or replace the terminal, then go to the next step.
		No	Go to the next step.
8	**VERIFY TROUBLESHOOTING OF DTC P0030 COMPLETED** • Make sure to reconnect all disconnected connectors. • Clear the DTC from the PCM memory using the WDS or equivalent. • Perform the HO2S heater, HO2S, and TWC Repair Verification Drive Mode. (See 01–02B–9 OBD-II DRIVE MODE [L3 WITH TC].) • Is the PENDING CODE for this DTC present?	Yes	Replace the PCM, then go to the next step. (See 01–40B–6 PCM REMOVAL/INSTALLATION [L3 WITH TC].)
		No	Go to the next step.
9	**VERIFY AFTER REPAIR PROCEDURE** • Perform the "AFTER REPAIR PROCEDURE". (See 01–02B–8 AFTER REPAIR PROCEDURE [L3 WITH TC].) • Are any DTCs present?	Yes	Go to the applicable DTC inspection. (See 01–02B–14 DTC TABLE [L3 WITH TC].)
		No	DTC troubleshooting completed.

DTC P0031 [L3 WITH TC]

E6U010200001W20

DTC P0031	Front HO2S heater circuit low input
DETECTION CONDITION	• The PCM monitors the front HO2S heater output voltage. If the PCM turns the front HO2S heater off or or but the front HO2S heater circuit voltage remains low the PCM determines that the front HO2S heater circuit has a malfunction. **Note** • The front HO2S heater is controlled by a duty signal. **Diagnostic support note** • This is a continuous monitor (HO2S heater). • The MIL illuminates if the PCM detects the above malfunction condition in two consecutive drive cycles or in one drive cycle while the DTC for the same malfunction has been stored in the PCM. • PENDING CODE is available if the PCM detects the above malfunction condition during the first drive cycle. • FREEZE FRAME DATA is available. • DTCs are stored in the PCM memory.
POSSIBLE CAUSE	• Front HO2S heater malfunction • Connector or terminal malfunction • Open circuit in the wiring harness between main relay and front HO2S terminal 2B • Short to ground in the wiring harness between main relay and front HO2S terminal 2B • Open circuit in the wiring harness between front HO2S terminal 2D and PCM terminal 4AD • Short to ground in the wiring harness between front HO2S terminal 2D and PCM terminal 4AD • PCM malfunction

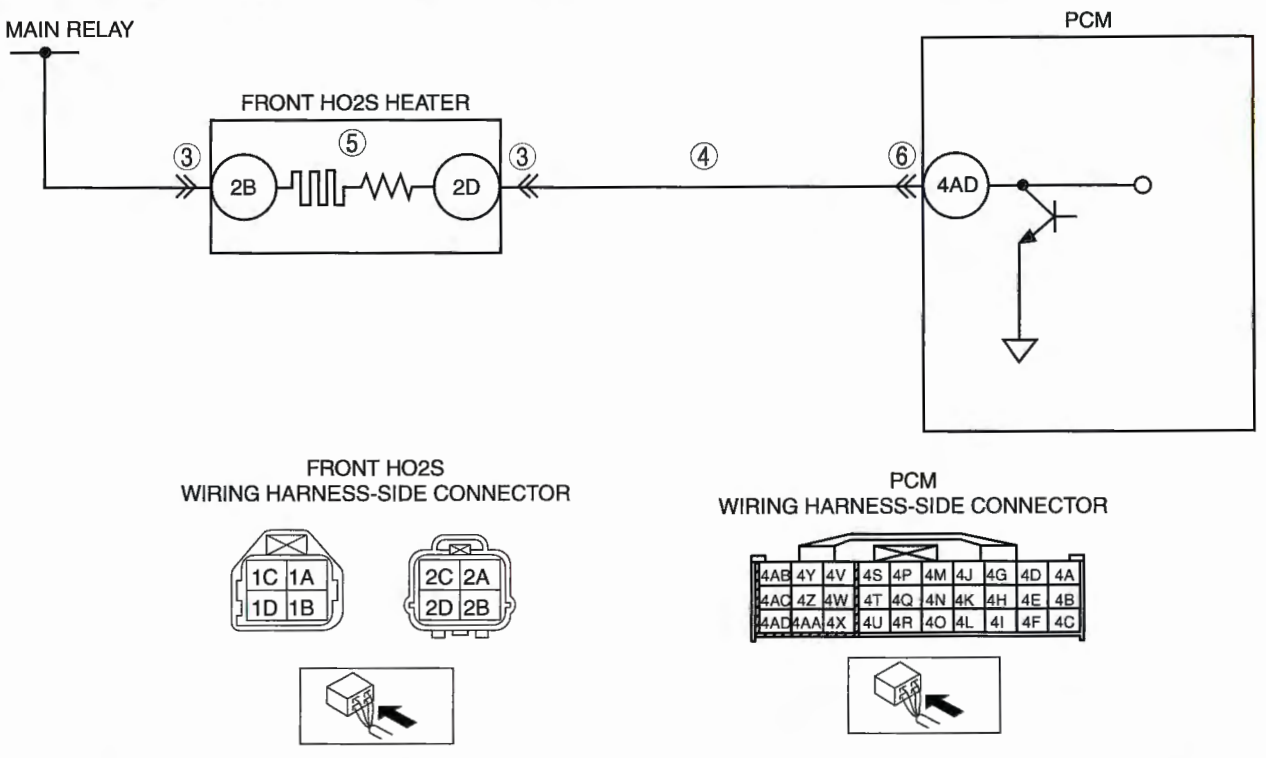

Diagnostic procedure

STEP	INSPECTION		ACTION
1	**VERIFY FREEZE FRAME DATA AND DIAGNOSTIC MONITORING TEST RESULTS HAVE BEEN RECORDED** • Have the FREEZE FRAME DATA and DIAGNOSTIC MONITORING TEST RESULTS (HO2S heater related) been recorded?	Yes	Go to the next step.
		No	Record the FREEZE FRAME DATA and DIAGNOSTIC MONITORING TEST RESULTS on the repair order, then go to the next step.
2	**VERIFY RELATED REPAIR INFORMATION AVAILABILITY** • Verify related Service Bulletins and/or on-line repair information availability. • Is any related repair information available?	Yes	Perform the repair or diagnosis according to the available repair information. • If the vehicle is not repaired, go to the next step.
		No	Go to the next step.
3	**INSPECT FRONT HO2S CONNECTOR FOR POOR CONNECTION** • Turn the ignition switch off. • Disconnect the front HO2S connector. • Inspect for poor connection (such as damaged/ pulled-out pins, and corrosion). • Is there any malfunction?	Yes	Repair or replace the terminal, then go to Step 7.
		No	Go to the next step.
4	**INSPECT FRONT HO2S HEATER CONTROL CIRCUIT FOR SHORT TO POWER SUPPLY** • Turn the ignition switch to the ON position (Engine off). • Measure the voltage between front HO2S terminal 2D (wiring harness-side) and body ground. • Is the voltage **B+**?	Yes	Repair or replace the wiring harness for a possible short to power supply, then go to Step 7.
		No	Go to the next step.
5	**INSPECT FRONT HO2S HEATER** • Inspect the front HO2S heater. (See 01–40B–42 HEATED OXYGEN SENSOR (HO2S) INSPECTION [L3 WITH TC].) • Is there any malfunction?	Yes	Replace the front HO2S, then go to Step 7. (See 01–15B–3 HO2S Removal Note.)
		No	Go to the next step.
6	**INSPECT PCM CONNECTOR FOR POOR CONNECTION** • Turn the ignition switch off. • Disconnect the PCM connector. • Inspect for poor connection (such as damaged/ pulled-out pins, and corrosion). • Is there any malfunction?	Yes	Repair or replace the terminal, then go to the next step.
		No	Go to the next step.
7	**VERIFY TROUBLESHOOTING OF DTC P0031 COMPLETED** • Make sure to reconnect all disconnected connectors. • Clear the DTC from the PCM memory using the WDS or equivalent. • Perform the HO2S heater, HO2S, and TWC Repair Verification Drive Mode. (See 01–02B–9 OBD-II DRIVE MODE [L3 WITH TC].) • Is the PENDING CODE for this DTC present?	Yes	Replace the PCM, then go to the next step. (See 01–40B–6 PCM REMOVAL/INSTALLATION [L3 WITH TC].)
		No	Go to the next step.
8	**VERIFY AFTER REPAIR PROCEDURE** • Perform the "AFTER REPAIR PROCEDURE". (See 01–02B–8 AFTER REPAIR PROCEDURE [L3 WITH TC].) • Are any DTCs present?	Yes	Go to the applicable DTC inspection. (See 01–02B–14 DTC TABLE [L3 WITH TC].)
		No	DTC troubleshooting completed.

DTC P0032 [L3 WITH TC]

E6U010200001W21

DTC P0032	Front HO2S heater circuit high input
DETECTION CONDITION	• The PCM monitors the front HO2S heater output voltage. If the PCM turns the front HO2S heater on or off but the front HO2S heater circuit voltage remains high the PCM determines that the front HO2S heater circuit has a malfunction. **Note** • The front HO2S heater is controlled by a duty signal. **Diagnostic support note** • This is a continuous monitor (HO2S heater). • The MIL illuminates if the PCM detects the above malfunction condition in two consecutive drive cycles or in one drive cycle while the DTC for the same malfunction has been stored in the PCM. • PENDING CODE is available if the PCM detects the above malfunction condition during the first drive cycle. • FREEZE FRAME DATA is available. • DTCs are stored in the PCM memory.
POSSIBLE CAUSE	• Front HO2S heater malfunction • Connector or terminal malfunction • Short to power supply in the wiring harness between front HO2S terminal 2D and PCM terminal 4AD • PCM malfunction

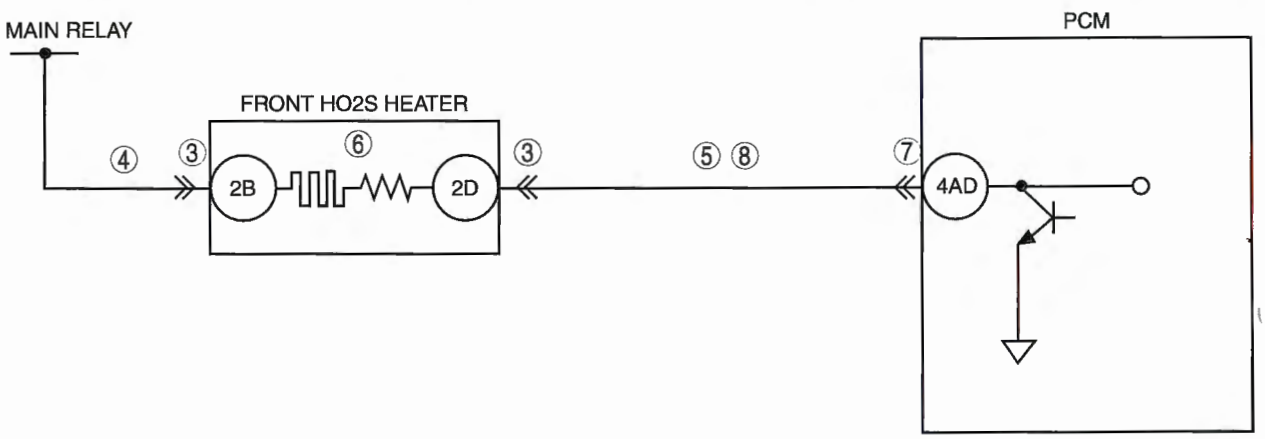

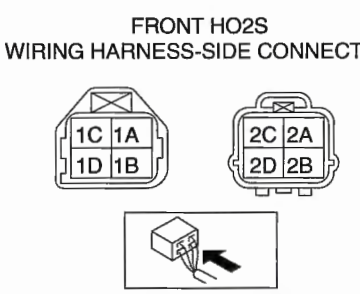

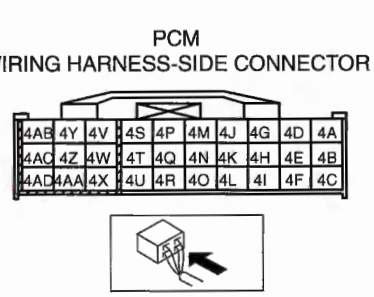

Diagnostic procedure

STEP	INSPECTION		ACTION
1	**VERIFY FREEZE FRAME DATA AND DIAGNOSTIC MONITORING TEST RESULTS HAVE BEEN RECORDED** • Have the FREEZE FRAME DATA and DIAGNOSTIC MONITORING TEST RESULTS (HO2S heater related) been recorded?	Yes	Go to the next step.
		No	Record the FREEZE FRAME DATA and DIAGNOSTIC MONITORING TEST RESULTS on the repair order, then go to the next step.
2	**VERIFY RELATED REPAIR INFORMATION AVAILABILITY** • Verify related Service Bulletins and/or on-line repair information availability. • Is any related repair information available?	Yes	Perform the repair or diagnosis according to the available repair information. • If the vehicle is not repaired, go to the next step.
		No	Go to the next step.

STEP	INSPECTION		ACTION
3	**INSPECT FRONT HO2S CONNECTOR FOR POOR CONNECTION** • Turn the ignition switch off. • Disconnect the front HO2S connector. • Inspect for poor connection (such as damaged/ pulled-out pins, and corrosion). • Is there any malfunction?	Yes	Repair or replace the terminal, then go to Step 9.
		No	Go to the next step.
4	**INSPECT FRONT HO2S HEATER POWER CIRCUIT FOR OPEN CIRCUIT OR SHORT TO GROUND** • Turn the ignition switch to the ON position (Engine off). • Measure the voltage between front HO2S terminal 2B (wiring harness-side) and body ground. • Is the voltage **B+**?	Yes	Go to the next step.
		No	Repair or replace the wiring harness for a possible open circuit or short to ground, then go to Step 9.
5	**INSPECT FRONT HO2S HEATER CONTROL CIRCUIT FOR SHORT TO GROUND** • Turn the ignition switch off. • Inspect for continuity between front HO2S terminal 2D (wiring harness-side) and body ground. • Is there continuity?	Yes	Repair or replace the wiring harness for a possible short to ground, then go to Step 9.
		No	Go to the next step.
6	**INSPECT FRONT HO2S HEATER** • Inspect the front HO2S heater. (See 01–40B–42 HEATED OXYGEN SENSOR (HO2S) INSPECTION [L3 WITH TC].) • Is there any malfunction?	Yes	Replace the front HO2S, then go to Step 9. (See 01–15B–3 HO2S Removal Note.)
		No	Go to the next step.
7	**INSPECT PCM CONNECTOR FOR POOR CONNECTION** • Turn the ignition switch off. • Disconnect the PCM connector. • Inspect for poor connection (such as damaged/ pulled-out pins, and corrosion). • Is there any malfunction?	Yes	Repair or replace the terminal, then go to Step 9.
		No	Go to the next step.
8	**INSPECT FRONT HO2S HEATER CONTROL CIRCUIT FOR OPEN CIRCUIT** • Turn the ignition switch off. • Inspect for continuity between front HO2S terminal 2D (wiring harness-side) and PCM terminal 4AD (wiring harness-side). • Is there continuity?	Yes	Go to the next step.
		No	Repair or replace the wiring harness for a possible open circuit, then go to the next step.
9	**VERIFY TROUBLESHOOTING OF DTC P0032 COMPLETED** • Make sure to reconnect all disconnected connectors. • Clear the DTC from the PCM memory using the WDS or equivalent. • Perform the HO2S heater, HO2S, and TWC Repair Verification Drive Mode. (See 01–02B–9 OBD-II DRIVE MODE [L3 WITH TC].) • Is the PENDING CODE for this DTC present?	Yes	Replace the PCM, then go to the next step. (See 01–40B–6 PCM REMOVAL/INSTALLATION [L3 WITH TC].)
		No	Go to the next step.
10	**VERIFY AFTER REPAIR PROCEDURE** • Perform the "AFTER REPAIR PROCEDURE". (See 01–02B–8 AFTER REPAIR PROCEDURE [L3 WITH TC].) • Are any DTCs present?	Yes	Go to the applicable DTC inspection. (See 01–02B–14 DTC TABLE [L3 WITH TC].)
		No	DTC troubleshooting completed.

DTC P0037 [L3 WITH TC]

E6U010200001W22

DTC P0037	Rear HO2S heater circuit low input
DETECTION CONDITION	• The PCM monitors the rear HO2S heater output voltage. If the PCM turns the rear HO2S heater on or off but the rear HO2S heater circuit voltage remains low the PCM determines that the rear HO2S heater circ has a malfunction. **Diagnostic support note** • This is a continuous monitor (HO2S heater). • The MIL illuminates if the PCM detects the above malfunction condition in two consecutive drive cycles or in one drive cycle while the DTC for the same malfunction has been stored in the PCM. • PENDING CODE is available if the PCM detects the above malfunction condition during the first drive cycle. • FREEZE FRAME DATA is available. • DTCs are stored in the PCM memory.
POSSIBLE CAUSE	• Rear HO2S heater malfunction • Connector or terminal malfunction • Open circuit in the wiring harness between ignition switch and rear HO2S terminal C • Short to ground in the wiring harness between ignition switch and rear HO2S terminal C • Open circuit in the wiring harness between rear HO2S terminal D and PCM terminal 4Z • Short to ground in the wiring harness between rear HO2S terminal D and PCM terminal 4Z • PCM malfunction

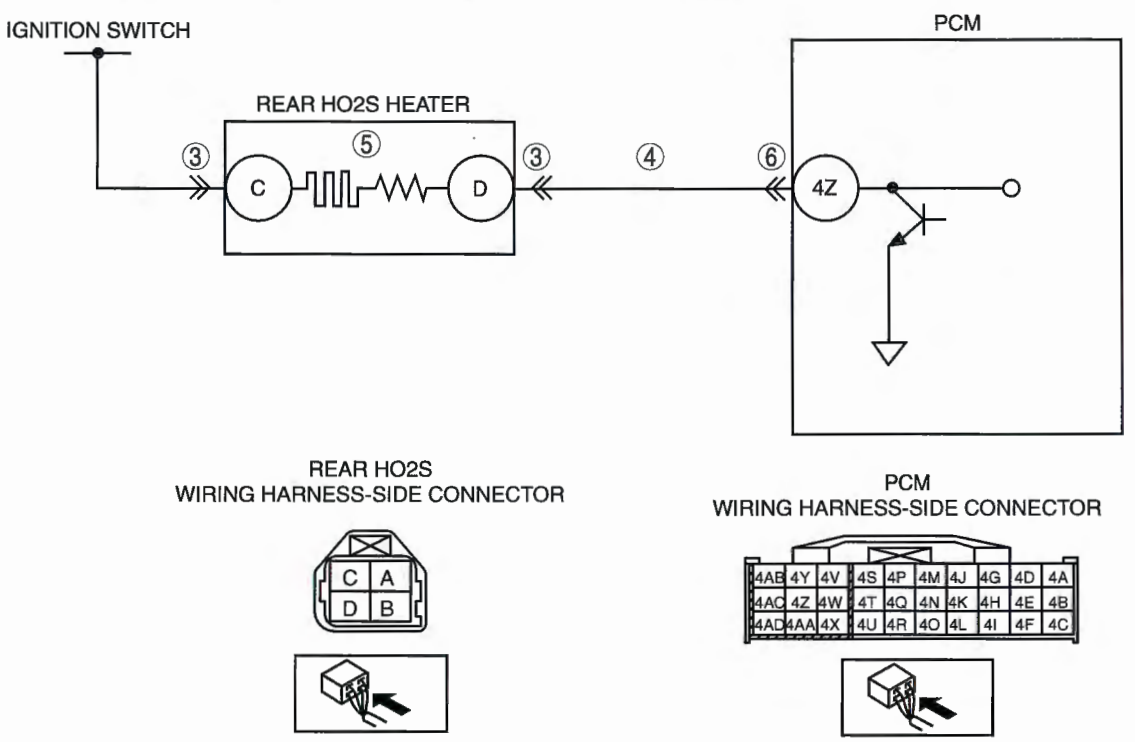

Diagnostic procedure

STEP	INSPECTION		ACTION
1	**VERIFY FREEZE FRAME DATA AND DIAGNOSTIC MONITORING TEST RESULTS HAVE BEEN RECORDED BEEN RECORDED** • Have the FREEZE FRAME DATA and DIAGNOSTIC MONITORING TEST RESULTS (HO2S heater related) been recorded?	Yes	Go to the next step.
		No	Record the FREEZE FRAME DATA and DIAGNOSTIC MONITORING TEST RESULTS on the repair order, then go to the next step.
2	**VERIFY RELATED REPAIR INFORMATION AVAILABILITY** • Verify related Service Bulletins and/or on-line repair information availability. • Is any related repair information available?	Yes	Perform the repair or diagnosis according to the available repair information. • If the vehicle is not repaired, go to the next step.
		No	Go to the next step.
3	**INSPECT REAR HO2S CONNECTOR FOR POOR CONNECTION** • Turn the ignition switch off. • Disconnect the rear HO2S connector. • Inspect for poor connection (such as damaged/ pulled-out pins, and corrosion). • Is there any malfunction?	Yes	Repair or replace the terminal, then go to Step 7.
		No	Go to the next step.
4	**INSPECT REAR HO2S HEATER CONTROL CIRCUIT FOR SHORT TO POWER SUPPLY** • Turn the ignition switch to the ON position (Engine off). • Measure the voltage between rear HO2S terminal D (wiring harness-side) and body ground. • Is the voltage **B+**?	Yes	Repair or replace the wiring harness for a possible short to power supply, then go to Step 7.
		No	Go to the next step.
5	**INSPECT REAR HO2S HEATER** • Inspect the rear HO2S heater. (See 01–40B–42 HEATED OXYGEN SENSOR (HO2S) INSPECTION [L3 WITH TC].) • Is there any malfunction?	Yes	Replace the rear HO2S, then go to Step 7. (See 01–15B–3 HO2S Removal Note.)
		No	Go to the next step.
6	**INSPECT PCM CONNECTOR FOR POOR CONNECTION** • Turn the ignition switch off. • Disconnect the PCM connector. • Inspect for poor connection (such as damaged/ pulled-out pins, and corrosion). • Is there any malfunction?	Yes	Repair or replace the terminal, then go to the next step.
		No	Go to the next step.
7	**VERIFY TROUBLESHOOTING OF DTC P0037 COMPLETED** • Make sure to reconnect all disconnected connectors. • Clear the DTC from the PCM memory using the WDS or equivalent. • Perform the HO2S heater, HO2S, and TWC Repair Verification Drive Mode. (See 01–02B–9 OBD-II DRIVE MODE [L3 WITH TC].) • Is the PENDING CODE for this DTC present?	Yes	Replace the PCM, then go to the next step. (See 01–40B–6 PCM REMOVAL/INSTALLATION [L3 WITH TC].)
		No	Go to the next step.
8	**VERIFY AFTER REPAIR PROCEDURE** • Perform the "AFTER REPAIR PROCEDURE". (See 01–02B–8 AFTER REPAIR PROCEDURE [L3 WITH TC].) • Are any DTCs present?	Yes	Go to the applicable DTC inspection. (See 01–02B–14 DTC TABLE [L3 WITH TC].)
		No	DTC troubleshooting completed.

DTC P0038 [L3 WITH TC]

E6U010200001W23

DTC P0038	Rear HO2S heater circuit high input
DETECTION CONDITION	• The PCM monitors the rear HO2S heater output voltage. If the PCM turns the rear HO2S heater off but the rear HO2S heater circuit voltage remains high the PCM determines that the rear HO2S heater circuit has malfunction. **Diagnostic support note** • This is a continuous monitor (HO2S heater). • The MIL illuminates if the PCM detects the above malfunction condition in two consecutive drive cycles or in one drive cycle while the DTC for the same malfunction has been stored in the PCM. • PENDING CODE is available if the PCM detects the above malfunction condition during the first drive cycle. • FREEZE FRAME DATA is available. • DTCs are stored in the PCM memory.
POSSIBLE CAUSE	• Rear HO2S heater malfunction • Connector or terminal malfunction • Short to power supply in the wiring harness between rear HO2S terminal D and PCM terminal 4Z • PCM malfunction

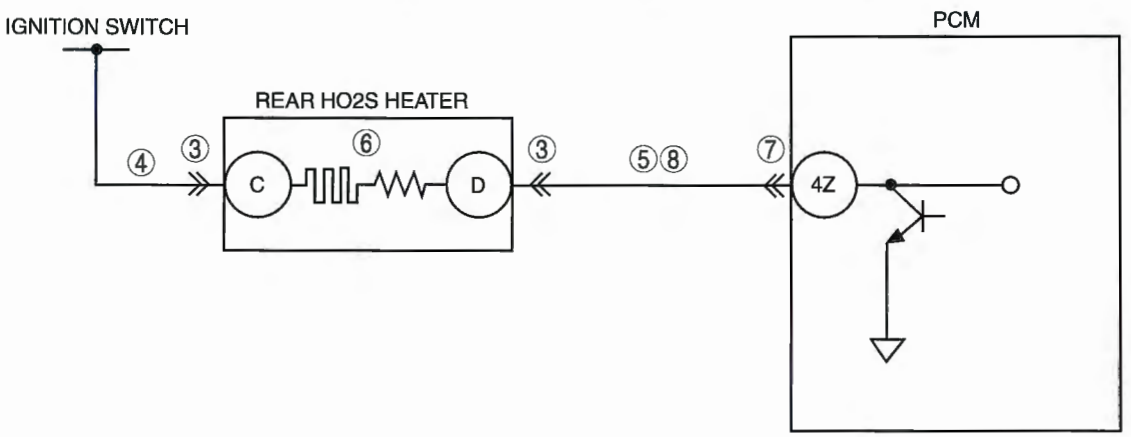

REAR HO2S
WIRING HARNESS-SIDE CONNECTOR

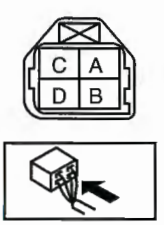

PCM
WIRING HARNESS-SIDE CONNECTOR

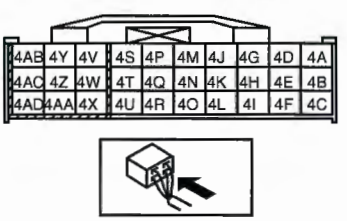

Diagnostic procedure

STEP	INSPECTION		ACTION
1	**VERIFY FREEZE FRAME DATA AND DIAGNOSTIC MONITORING TEST RESULTS HAVE BEEN RECORDED** • Have the FREEZE FRAME DATA and DIAGNOSTIC MONITORING TEST RESULTS (HO2S heater related) been recorded?	Yes	Go to the next step.
		No	Record the FREEZE FRAME DATA and DIAGNOSTIC MONITORING TEST RESULTS on the repair order, then go to the next step.
2	**VERIFY RELATED REPAIR INFORMATION AVAILABILITY** • Verify related Service Bulletins and/or on-line repair information availability. • Is any related repair information available?	Yes	Perform the repair or diagnosis according to the available repair information. • If the vehicle is not repaired, go to the next step.
		No	Go to the next step.
3	**INSPECT REAR HO2S CONNECTOR FOR POOR CONNECTION** • Turn the ignition switch off. • Disconnect the rear HO2S connector. • Inspect for poor connection (such as damaged/ pulled-out pins, and corrosion). • Is there any malfunction?	Yes	Repair or replace the terminal, then go to Step 9.
		No	Go to the next step.

STEP	INSPECTION		ACTION
4	**INSPECT REAR HO2S HEATER POWER CIRCUIT FOR OPEN CIRCUIT OR SHORT TO GROUND** • Turn the ignition switch to the ON position (Engine off). • Measure the voltage between rear HO2S terminal C (wiring harness-side) and body ground. • Is the voltage **B+**?	Yes	Go to the next step.
		No	Repair or replace the wiring harness for a possible open circuit or short to ground, then go to Step 9.
5	**INSPECT REAR HO2S HEATER CONTROL CIRCUIT FOR SHORT TO GROUND** • Turn the ignition switch off. • Inspect for continuity between rear HO2S terminal D (wiring harness-side) and body ground. • Is there continuity?	Yes	Repair or replace the wiring harness for a possible short to ground, then go to Step 9.
		No	Go to the next step.
6	**INSPECT REAR HO2S HEATER** • Inspect the rear HO2S heater. (See 01–40B–42 HEATED OXYGEN SENSOR (HO2S) INSPECTION [L3 WITH TC].) • Is there any malfunction?	Yes	Replace the rear HO2S, then go to Step 9. (See 01–15B–3 HO2S Removal Note.)
		No	Go to the next step.
7	**INSPECT PCM CONNECTOR FOR POOR CONNECTION** • Turn the ignition switch off. • Disconnect the PCM connector. • Inspect for poor connection (such as damaged/ pulled-out pins, and corrosion). • Is there any malfunction?	Yes	Repair or replace the terminal, then go to Step 9.
		No	Go to the next step.
8	**INSPECT REAR HO2S HEATER CONTROL CIRCUIT FOR OPEN CIRCUIT** • Turn the ignition switch off. • Inspect for continuity between rear HO2S terminal D (wiring harness-side) and PCM terminal 4Z (wiring harness-side). • Is there continuity?	Yes	Go to the next step.
		No	Repair or replace the wiring harness for a possible open circuit, then go to the next step.
9	**VERIFY TROUBLESHOOTING OF DTC P0038 COMPLETED** • Make sure to reconnect all disconnected connectors. • Clear the DTC from the PCM memory using the WDS or equivalent. • Perform the HO2S heater, HO2S, and TWC Repair Verification Drive Mode. (See 01–02B–9 OBD-II DRIVE MODE [L3 WITH TC].) • Is the PENDING CODE for this DTC present?	Yes	Replace the PCM, then go to the next step. (See 01–40B–6 PCM REMOVAL/INSTALLATION [L3 WITH TC].)
		No	Go to the next step.
10	**VERIFY AFTER REPAIR PROCEDURE** • Perform the "AFTER REPAIR PROCEDURE". (See 01–02B–8 AFTER REPAIR PROCEDURE [L3 WITH TC].) • Are any DTCs present?	Yes	Go to the applicable DTC inspection. (See 01–02B–14 DTC TABLE [L3 WITH TC].)
		No	DTC troubleshooting completed.

DTC P0069 [L3 WITH TC]

E6U010200001W24

DTC P0069	Manifold absolute pressure/atmospheric pressure correlation
DETECTION CONDITION	• PCM monitors differences between intake manifold vacuum and atmospheric pressure. If the difference is **below –12 kPa {–90 mmHg, –3.5 inHg}** or **above 12 kPa {90 mmHg, 3.5 inHg}** when the following conditions are met, the PCM determines that there is a MAP sensor performance problem. **MONITORING CONDITION** — **12—15 s** from when ignition switch is turned off. — Intake air temperature is **above -10°C {14°F}**. — Engine coolant temperature is **above 70°C {158°F}**. **Diagnostic support note** • This is a continuous monitor (CCM). • MIL illuminates if the PCM detects the above malfunction condition in two consecutive drive cycles or in one drive cycle while the DTC for the same malfunction has been stored in PCM. • PENDING CODE is available if the PCM detects the above malfunction condition during the first drive cycle. • FREEZE FRAME DATA is available. • DTCs are stored in the PCM memory.
POSSIBLE CAUSE	• MAP sensor malfunction or substandard performance • BARO sensor malfunction or substandard performance

Diagnostic procedure

STEP	INSPECTION		ACTION
1	**VERIFY FREEZE FRAME DATA HAS BEEN RECORDED** • Has the FREEZE FRAME DATA been recorded?	Yes	Go to the next step.
		No	Record FREEZE FRAME DATA on the repair order, then go to the next step.
2	**VERIFY RELATED REPAIR INFORMATION AVAILABILITY** • Check for related Service Bulletins and/or on-line repair information availability. • Is any related repair information available?	Yes	Perform the repair or diagnosis according to the available repair information. • If the vehicle is not repaired, go to the next step.
		No	Go to the next step.
3	**VERIFY STORED DTC** • Turn the ignition switch to off then start the engine. • Have DTC P0107, P0108, P2228 or P2229 been stored?	Yes	Inspect and repair DTC P0107, P0108, P2228 or P2229.
		No	Go to the next step.
4	**IDENTIFY TRIGGER DTC FOR FREEZE FRAME DATA** • Is DTC P0069 on the FREEZE FRAME DATA?	Yes	Go to the next step.
		No	Go to troubleshooting procedures for the DTC on the FREEZE FRAME DATA.
5	**INSPECT MAP SENSOR STUCK OPEN OR CLOSED** • Inspect MAP sensor. (See 01–40B–31 MANIFOLD ABSOLUTE PRESSURE (MAP) SENSOR INSPECTION [L3 WITH TC].) • Is the MAP sensor normal?	Yes	Go to the next step.
		No	Replace the MAP sensor, then go to step 7. (See 01–40B–31 MANIFOLD ABSOLUTE PRESSURE (MAP) SENSOR/BOOST AIR TEMPERATURE SENSOR REMOVAL/INSTALLATION [L3 WITH TC].)
6	**INSPECT BARO SENSOR** • Inspect the BARO sensor. (See 01–40B–34 BAROMETRIC PRESSURE (BARO) SENSOR INSPECTION [L3 WITH TC].) • Is the BARO sensor normal?	Yes	Go to the next step.
		No	Replace the PCM, then go to the next step. (See 01–40B–6 PCM REMOVAL/INSTALLATION [L3 WITH TC].)
7	**VERIFY TROUBLESHOOTING OF DTC P0069 COMPLETED** • Make sure to reconnect all disconnected connectors. • Turn the ignition switch to the ON position (Engine off). • Clear the DTC from the memory using the WDS or equivalent. • Start the engine. • Is the same DTC present?	Yes	Replace the PCM, then go to the next step. (See 01–40B–6 PCM REMOVAL/INSTALLATION [L3 WITH TC].)
		No	Go to the next step.
8	**VERIFY AFTER REPAIR PROCEDURE** • Perform the "AFTER REPAIR PROCEDURE". (See 01–02B–8 AFTER REPAIR PROCEDURE [L3 WITH TC].) • Are any DTCs present?	Yes	Go to the applicable DTC inspection. (See 01–02B–14 DTC TABLE [L3 WITH TC].)
		No	DTC troubleshooting completed.

DTC P0089 [L3 WITH TC]

E6U010200001W25

DTC P0089	Fuel pressure regulator performance
DETECTION CONDITION	• If the fuel pressure average value measured by the PCM exceeds the specification when the camshaft is rotating at a specified rate, the PCM determines that there is a fuel pressure regulator performance problem. **Diagnostic support note** • This is a continuous monitor (Other). • The MIL does not illuminate. • FREEZE FRAME DATA is not available. • DTCs are stored in the PCM memory.
POSSIBLE CAUSE	• Spill valve control solenoid valve malfunction • Connector or terminal malfunction • PCM malfunction

Diagnostic procedure

STEP	INSPECTION		ACTION
1	**VERIFY FREEZE FRAME DATA HAS BEEN RECORDED** • Has the FREEZE FRAME DATA been recorded?	Yes	Go to the next step.
		No	Record the FREEZE FRAME DATA on the repair order, then go to the next step.
2	**VERIFY RELATED REPAIR INFORMATION AVAILABILITY** • Verify related service Bulletins and/or on-line repair information availability. • Is any related repair information available?	Yes	Perform the repair or diagnosis according to the available repair information. • If the vehicle is not repaired, go to the next step.
		No	Go to the next step.
3	**INSPECT HIGH PRESSURE FUEL PUMP CONNECTOR FOR POOR CONNECTION** • Turn the ignition switch off. • Disconnect the high pressure fuel pump connector. • Inspect for poor connection (such as damaged/ pulled-out pins, corrosion). • Is there any malfunction?	Yes	Repair or replace the terminals, then go to Step 6.
		No	Go to the next step.
4	**INSPECT SPILL VALVE CONTROL SOLENOID VALVE** • Inspect the spill valve control solenoid valve. (See 01–14B–20 HIGH PRESSURE FUEL PUMP INSPECTION [L3 WITH TC].) • Is there any malfunction?	Yes	Replace the high pressure fuel pump, then go to Step 6. (See 01–14B–18 HIGH PRESSURE FUEL PUMP REMOVAL/INSTALLATION [L3 WITH TC].)
		No	Go to the next step.
5	**INSPECT PCM CONNECTOR FOR POOR CONNECTION** • Turn the ignition switch off. • Disconnect the PCM connector. • Inspect for poor connection (such as damaged/ pulled-out pins, corrosion.) • Is there any malfunction?	Yes	Repair the terminal, then go to the next step.
		No	Go to the next step.
6	**VERIFY TROUBLESHOOTING OF DTC P0089 COMPLETED** • Make sure to reconnect all the disconnected connectors. • Clear the DTC from the PCM memory using the WDS or equivalent. • Start the engine. • Is the same DTC present?	Yes	Replace the PCM, then go to the next step. (See 01–40B–6 PCM REMOVAL/INSTALLATION [L3 WITH TC].)
		No	Go to the next step.
7	**VERIFY AFTER REPAIR PROCEDURE** • Perform the "AFTER REPAIR PROCEDURE". (See 01–02B–8 AFTER REPAIR PROCEDURE [L3 WITH TC].) • Are any DTCs present?	Yes	Go to the applicable DTC inspection. (See 01–02B–14 DTC TABLE [L3 WITH TC].)
		No	DTC troubleshooting completed.

DTC P0091 [L3 WITH TC]

E6U010200001W26

DTC P0091	Fuel pressure regulator control circuit low
DETECTION CONDITION	• When the PCM turns the spill valve control solenoid valve off but the spill valve control solenoid valve control circuit voltage is low, the PCM determines that the spill valve control solenoid valve control circuit has malfunction. **MONITORING CONDITIONS** — The following conditions are met: • Engine speed is **3,000 rpm or less**. • Battery voltage is **10 V or more**. **Diagnostic support note** • This is a continuous monitor (CCM). • The MIL illuminates if the PCM detects the above malfunction condition during first drive cycle. • FREEZE FRAME DATA is available. • DTCs are stored in the PCM memory.
POSSIBLE CAUSE	• Spill valve control solenoid valve malfunction • Open circuit in the wiring harness between high pressure fuel pump terminal A and PCM terminal 1A • Open circuit in the wiring harness between high pressure fuel pump terminal B and PCM terminal 1B • Short to ground in the wiring harness between high pressure fuel pump terminal A and PCM terminal 1A • Short to ground in the wiring harness between high pressure fuel pump terminal B and PCM terminal 1B • Connector or terminal malfunction • PCM malfunction

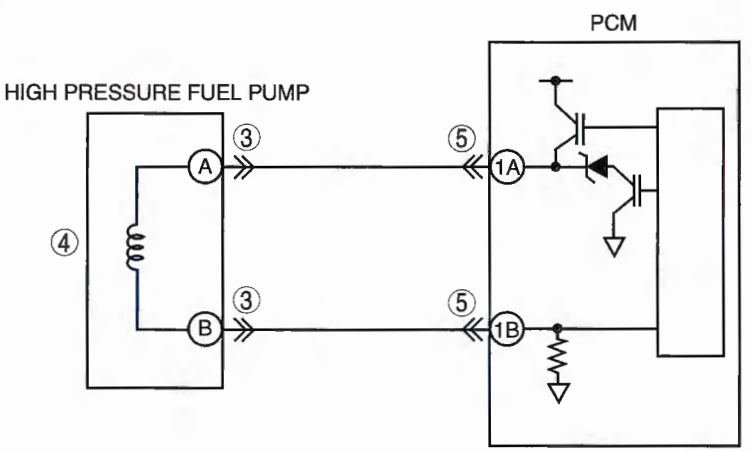

HIGH PRESSURE FUEL PUMP WIRING HARNESS-SIDE CONNECTOR

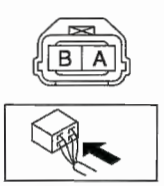

PCM WIRING HARNESS-SIDE CONNECTOR

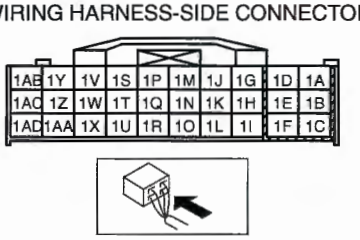

Diagnostic procedure

STEP	INSPECTION		ACTION
1	**VERIFY FREEZE FRAME DATA HAS BEEN RECORDED** • Has the FREEZE FRAME DATA been recorded?	Yes	Go to the next step.
		No	Record the FREEZE FRAME DATA on the repair order, then go to the next step.
2	**VERIFY RELATED REPAIR INFORMATION AVAILABILITY** • Verify related service repair information availability. • Is any related repair information available?	Yes	Perform the repair or diagnosis according to the available repair information. • If the vehicle is not repaired, go to the next step.
		No	Go to the next step.
3	**INSPECT HIGH PRESSURE FUEL PUMP CONNECTOR FOR POOR CONNECTION** • Turn the ignition switch off. • Disconnect the high pressure fuel pump connector. • Inspect for poor connection (such as damaged/ pulled-out pins, corrosion). • Is there any malfunction?	Yes	Repair or replace the terminal, then go to Step 7.
		No	Go to the next step.
4	**INSPECT SPILL VALVE CONTROL SOLENOID VALVE** • Inspect the spill valve control solenoid valve. (See 01–14B–20 HIGH PRESSURE FUEL PUMP INSPECTION [L3 WITH TC].) • Is there any malfunction.	Yes	Replace the high pressure fuel pump, then go to Step 7. (See 01–14B–18 HIGH PRESSURE FUEL PUMP REMOVAL/INSTALLATION [L3 WITH TC].)
		No	Go to the next step.
5	**INSPECT PCM CONNECTOR FOR POOR CONNECTION** • Turn the ignition switch off. • Disconnect the PCM connector. • Inspect for poor connection (such as damaged/ pulled-out pins, corrosion). • Is there any malfunction?	Yes	Repair or replace the terminal, then go to Step 7.
		No	Go to the next step.
6	**INSPECT SPILL VALVE CONTROL SOLENOID VALVE CONTROL CIRCUIT FOR SHORT TO POWER SUPPLY** • Turn the ignition switch to the ON position (Engine off). • Measure the voltage between the following terminals: — High pressure fuel pump terminal A (wiring harness-side) and body ground — High pressure fuel pump terminal B (wiring harness-side) and body ground • Is the voltage **B+?**	Yes	Repair or replace the wiring harness for a possible short to the power supply, then go to the next step.
		No	Go to the next step.
7	**VERIFY TROUBLESHOOTING OF DTC P0091 COMPLETED** • Make sure to reconnect all the disconnected connectors. • Clear the DTC from the PCM memory using the WDS or equivalent. • Start the engine. • Is the same DTC present?	Yes	Replace the PCM, then go to the next step. (See 01–40B–6 PCM REMOVAL/INSTALLATION [L3 WITH TC].)
		No	Go to the next step.
8	**VERIFY AFTER REPAIR PROCEDURE** • Perform the "AFTER REPAIR PROCEDURE". (See 01–02B–8 AFTER REPAIR PROCEDURE [L3 WITH TC].) • Are any DTCs present?	Yes	Go to the applicable DTC inspection. (See 01–02B–14 DTC TABLE [L3 WITH TC].)
		No	DTC troubleshooting completed.

DTC P0092 [L3 WITH TC]

E6U010200001W27

DTC P0092	Fuel pressure regulator control circuit high
DETECTION CONDITION	• When the PCM turns the spill valve control solenoid valve on but the spill valve control solenoid valve circui* voltage is high, the PCM determines that the spill valve control solenoid valve control circuit has malfunction. **MONITORING CONDITIONS** — The following conditions are met: • Engine speed is **3,000 rpm or less.** • Battery voltage is **10 V or more.** **Diagnostic support note** • This is a continuous monitor (CCM). • The MIL illuminates if the PCM detects the above malfunction condition during first drive cycle. • FREEZE FRAME DATA is available. • DTCs are stored in the PCM memory.
POSSIBLE CAUSE	• Spill valve control solenoid valve malfunction • Connector or terminal malfunction • Short to power supply in the wiring harness between high pressure fuel pump terminal B and PCM terminal 1B • PCM malfunction

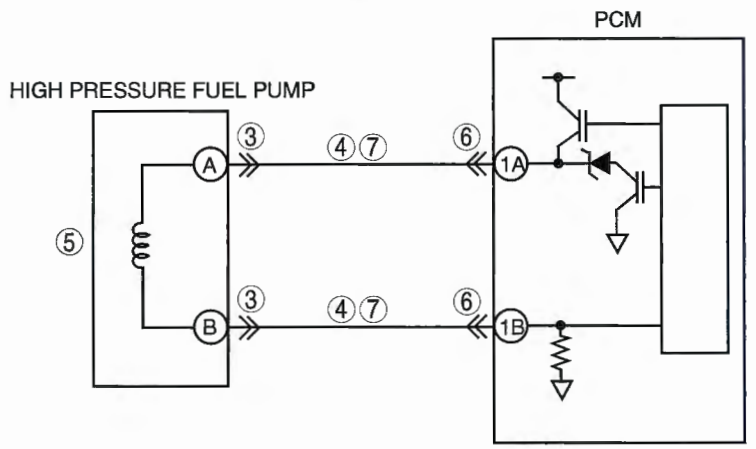

HIGH PRESSURE FUEL PUMP WIRING HARNESS-SIDE CONNECTOR

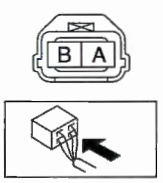

PCM WIRING HARNESS-SIDE CONNECTOR

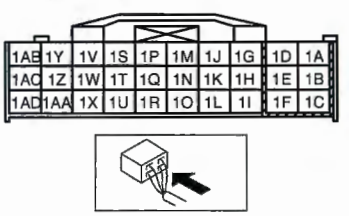

Diagnostic procedure

STEP	INSPECTION		ACTION
1	**VERIFY FREEZE FRAME DATA HAS BEEN RECORDED** • Has the FREEZE FRAME DATA been recorded?	Yes	Go to the next step.
		No	Record the FREEZE FRAME DATA on the repair order, then go to the next step.
2	**VERIFY RELATED REPAIR INFORMATION AVAILABILITY** • Verify related service repair information availability. • Is any related repair information available?	Yes	Perform the repair or diagnosis according to the available repair information. • If the vehicle is not repaired, go to the next step.
		No	Go to the next step.

STEP	INSPECTION		ACTION
3	**INSPECT HIGH PRESSURE FUEL PUMP CONNECTOR FOR POOR CONNECTION** • Turn the ignition switch off. • Disconnect the high pressure fuel pump connector. • Inspect for poor connection (such as damaged/ pulled-out pins, corrosion). • Is there any malfunction?	Yes	Repair or replace the terminal, then go to Step 8.
		No	Go to the next step.
4	**INSPECT SPILL VALVE CONTROL SOLENOID VALVE CONTROL CIRCUIT FOR SHORT TO GROUND** • Turn the ignition switch off. • Inspect for continuity between the following terminals: — High pressure fuel pump terminal A (wiring harness-side) and body ground — High pressure fuel pump terminal B (wiring harness-side) and body ground • Is there continuity?	Yes	Repair or replace the wiring harness for a possible short to ground, then go to Step 8.
		No	Go to the next step.
5	**INSPECT SPILL VALVE CONTROL SOLENOID VALVE** • Inspect the spill valve control solenoid valve. (See 01–14B–20 HIGH PRESSURE FUEL PUMP INSPECTION [L3 WITH TC].) • Is there any malfunction.	Yes	Replace the high pressure fuel pump, then go to Step 8. (See 01–14B–18 HIGH PRESSURE FUEL PUMP REMOVAL/INSTALLATION [L3 WITH TC].)
		No	Go to the next step.
6	**INSPECT PCM CONNECTOR FOR POOR CONNECTION** • Turn the ignition switch off. • Disconnect the PCM connector. • Inspect for poor connection (such as damaged/ pulled-out pins, corrosion). • Is there any malfunction?	Yes	Repair or replace the terminal, then go to Step 8.
		No	Go to the next step.
7	**INSPECT SPILL VALVE CONTROL SOLENOID VALVE CONTROL CIRCUIT FOR OPEN CIRCUIT** • Turn the ignition switch off. • Inspect for continuity between the following terminals: — High pressure fuel pump terminal A (wiring harness-side) and PCM terminal 1A (wiring harness-side) — High pressure fuel pump terminal B (wiring harness-side) and PCM terminal 1B (wiring harness-side) • Is there continuity?	Yes	Go to the next step.
		No	Repair or replace the wiring harness for a possible open circuit, then go to the next step.
8	**VERIFY TROUBLESHOOTING OF DTC P0092 COMPLETED** • Make sure to reconnect all the disconnected connectors. • Clear the DTC from the PCM memory using the WDS or equivalent. • Start the engine. • Is the same DTC present?	Yes	Replace the PCM, then go to the next step. (See 01–40B–6 PCM REMOVAL/INSTALLATION [L3 WITH TC].)
		No	Go to the next step.
9	**VERIFY AFTER REPAIR PROCEDURE** • Perform the "AFTER REPAIR PROCEDURE". (See 01–02B–8 AFTER REPAIR PROCEDURE [L3 WITH TC].) • Are any DTCs present?	Yes	Go to the applicable DTC inspection. (See 01–02B–14 DTC TABLE [L3 WITH TC].)
		No	DTC troubleshooting completed.

DTC P0096 [L3 WITH TC]

E6U010200001W28

DTC P0096	Boost air temperature sensor circuit range/performance problem
DETECTION CONDITION	• If the intake air temperature is higher than the engine coolant temperature by **23 °C {41.4 °F}** for **1.2 s** with the ignition switch turn to the ON position*, the PCM determines that there is a boost air temperature sensor circuit range/performance problem. *: Ignition switch on when **6 h or more** has passed since the ignition switch was turned off **Diagnostic support note** • This is a continuous monitor (CCM). • The MIL illuminates if the PCM detects the above malfunction condition in two consecutive drive cycles or in one drive cycle while the DTC for the same malfunction has been stored in the PCM. • PENDING CODE is available if the PCM detects the above malfunction condition during first drive cycle. • FREEZE FRAME DATA is available. • DTCs are stored in the PCM memory.
POSSIBLE CAUSE	• Boost air temperature sensor malfunction • ECT sensor malfunction • Connector or terminal malfunction • PCM malfunction

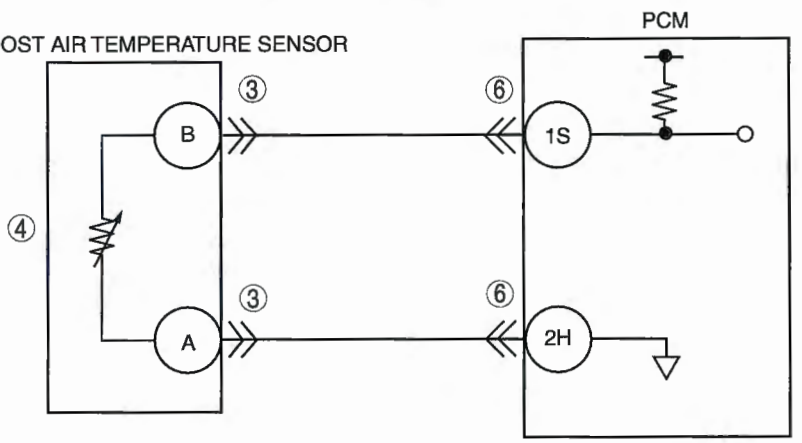

MAP/BOOST AIR TEMPERATURE SENSOR WIRING HARNESS-SIDE CONNECTOR



PCM WIRING HARNESS-SIDE CONNECTOR

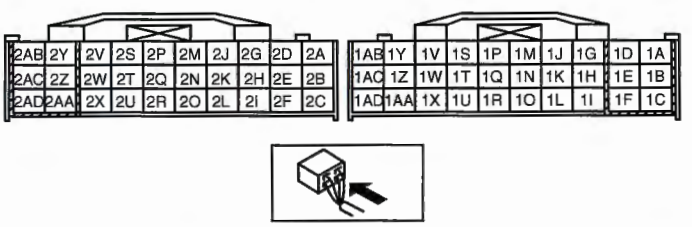

Diagnostic procedure

STEP	INSPECTION		ACTION
1	**VERIFY FREEZE FRAME DATA HAS BEEN RECORDED** • Has the FREEZE FRAME DATA been recorded?	Yes	Go to the next step.
		No	Record FREEZE FRAME DATA on the repair order, then go to the next step.
2	**VERIFY RELATED REPAIR INFORMATION AVAILABILITY** • Check for related Service Bulletins and/or on-line repair information availability. • Is any related repair information available?	Yes	Perform the repair or diagnosis according to the available repair information. • If the vehicle is not repaired, go to the next step.
		No	Go to the next step.
3	**INSPECT MAP/BOOST AIR TEMPERATURE SENSOR CONNECTOR FOR POOR CONNECTION** • Turn the ignition switch off. • Disconnect the MAP/boost air temperature sensor connector. • Inspect for poor connection (damaged, pulled-out pins, corrosion, etc.). • Is there any malfunction?	Yes	Repair or replace the terminal, then go to Step 7.
		No	Go to the next step.
4	**INSPECT BOOST AIR TEMPERATURE SENSOR** • Inspect the boost air temperature sensor. (See 01–40B–32 BOOST AIR TEMPERATURE SENSOR INSPECTION [L3 WITH TC].) • Is there any malfunction?	Yes	Replace the MAP/boost air temperature sensor, then go to Step 7. (See 01–40B–31 MANIFOLD ABSOLUTE PRESSURE (MAP) SENSOR/BOOST AIR TEMPERATURE SENSOR REMOVAL/INSTALLATION [L3 WITH TC].)
		No	Go to the next step.
5	**INSPECT ECT SENSOR** • Inspect the ECT sensor. (See 01–40B–30 ENGINE COOLANT TEMPERATURE (ECT) SENSOR INSPECTION [L3 WITH TC].) • Is there any malfunction?	Yes	Replace the ECT sensor, then go to Step 7. (See 01–40B–30 ENGINE COOLANT TEMPERATURE (ECT) SENSOR REMOVAL/INSTALLATION [L3 WITH TC].)
		No	Go to the next step.
6	**INSPECT PCM CONNECTOR FOR POOR CONNECTION** • Turn the ignition switch off. • Disconnect the PCM connector. • Inspect for poor connection (damaged, pulled-out pins, corrosion, etc.). • Is there any malfunction?	Yes	Repair or replace the terminal, then go to the next step.
		No	Go to the next step.
7	**VERIFY TROUBLESHOOTING OF DTC P0096 COMPLETED** • Make sure to connect all disconnected connectors. • Clear the DTC from the PCM memory using the WDS or equivalent. • Start the engine and run it under the FREEZE FRAME DATA condition. • Is the same DTC present?	Yes	Replace the PCM, then go to the next step. (See 01–40B–6 PCM REMOVAL/INSTALLATION [L3 WITH TC].)
		No	Go to the next step.
8	**VERIFY AFTER REPAIR PROCEDURE** • Perform the "AFTER REPAIR PROCEDURE". (See 01–02B–8 AFTER REPAIR PROCEDURE [L3 WITH TC].) • Are any DTCs present?	Yes	Go to the applicable DTC inspection. (See 01–02B–14 DTC TABLE [L3 WITH TC].)
		No	DTC troubleshooting completed.

DTC P0097 [L3 WITH TC]

E6U010200001W29

DTC P0097	Boost air temperature sensor circuit low
DETECTION CONDITION	• If the PCM detects that the boost air temperature sensor voltage is **0.1 V or less**, the PCM determines that the boost air temperature sensor circuit voltage is low. **Diagnostic support note** • This is a continuous monitor (CCM). • The MIL illuminates if the PCM detects the above malfunction condition during first drive cycle. • FREEZE FRAME DATA is available. • DTCs are stored in the PCM memory.
POSSIBLE CAUSE	• Boost air temperature sensor malfunction • Short to ground circuit between MAP/boost air temperature sensor terminal B and PCM terminal 1S • Connector or terminal malfunction • PCM malfunction

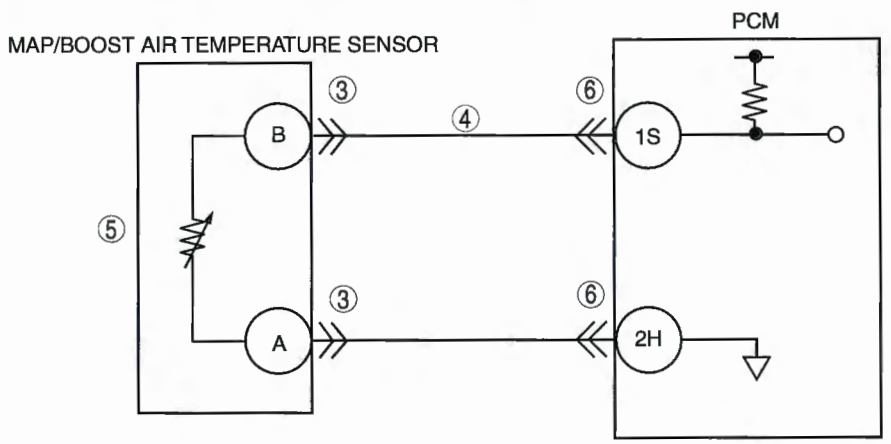

MAP/BOOST AIR TEMPERATURE SENSOR WIRING HARNESS-SIDE CONNECTOR



PCM WIRING HARNESS-SIDE CONNECTOR

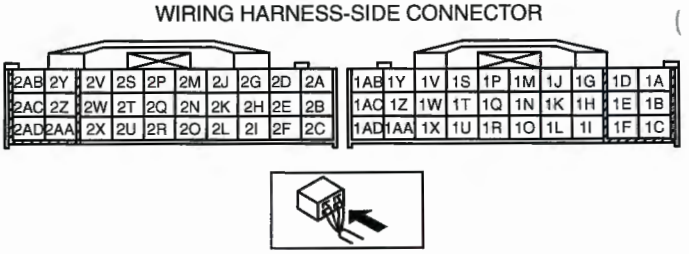

Diagnostic procedure

STEP	INSPECTION		ACTION
1	**VERIFY FREEZE FRAME DATA HAS BEEN RECORDED** • Has the FREEZE FRAME DATA been recorded?	Yes	Go to the next step.
		No	Record FREEZE FRAME DATA on the repair order, then go to the next step.
2	**VERIFY RELATED REPAIR INFORMATION AVAILABILITY** • Check for related Service Bulletins and/or on-line repair information availability. • Is any related repair information available?	Yes	Perform the repair or diagnosis according to the available repair information. • If the vehicle is not repaired, go to the next step.
		No	Go to the next step.
3	**INSPECT MAP/BOOST AIR TEMPERATURE SENSOR CONNECTOR FOR POOR CONNECTION** • Turn the ignition switch off. • Disconnect the MAP/boost air temperature sensor connector. • Inspect for poor connection (such as damaged/ pulled-out pins, corrosion). • Is there any malfunction?	Yes	Repair or replace the terminal, then go to Step 7.
		No	Go to the next step.
4	**INSPECT BOOST AIR TEMPERATURE SENSOR SIGNAL CIRCUIT FOR SHORT TO GROUND** • Turn the ignition switch off. • Inspect for continuity between the MAP/boost air temperature sensor terminal B (wiring harness-side) and body ground. • Is there continuity?	Yes	Repair or replace the wiring harness for a short to ground, then go to Step 7.
		No	Go to the next step.
5	**INSPECT BOOST AIR TEMPERATURE SENSOR** • Inspect the boost air temperature sensor. (See 01–40B–32 BOOST AIR TEMPERATURE SENSOR INSPECTION [L3 WITH TC].) • Is there malfunction?	Yes	Replace the MAP/boost air temperature sensor, then go to Step 7. (See 01–40B–31 MANIFOLD ABSOLUTE PRESSURE (MAP) SENSOR/BOOST AIR TEMPERATURE SENSOR REMOVAL/INSTALLATION [L3 WITH TC].)
		No	Go to the next step.
6	**INSPECT PCM CONNECTOR FOR POOR CONNECTION** • Turn the ignition switch off. • Disconnect the PCM connector. • Inspect for poor connection (such as damaged/ pulled-out pins, corrosion). • Is there any malfunction?	Yes	Repair or replace the terminal, then go to the next step.
		No	Go to the next step.
7	**VERIFY TROUBLESHOOTING OF DTC P0097 COMPLETED** • Make sure to connect all disconnected connectors. • Clear the DTC from the PCM memory using the WDS or equivalent. • Start the engine. • Is the same DTC present?	Yes	Replace PCM, then go to the next step. (See 01–40B–6 PCM REMOVAL/INSTALLATION [L3 WITH TC].)
		No	Go to the next step.
8	**VERIFY AFTER REPAIR PROCEDURE** • Perform the "AFTER REPAIR PROCEDURE". (See 01–02B–8 AFTER REPAIR PROCEDURE [L3 WITH TC].) • Are any DTCs present?	Yes	Go to the applicable DTC inspection. (See 01–02B–14 DTC TABLE [L3 WITH TC].)
		No	DTC troubleshooting completed.

DTC P0098 [L3 WITH TC]

E6U010200001W30

DTC P0098	Boost air temperature sensor circuit high
DETECTION CONDITION	• If the PCM detects that the boost air temperature sensor voltage is **4.96 V or more**, the PCM determines that the boost air temperature sensor circuit voltage is high. **Diagnostic support note** • This is a continuous monitor (CCM). • The MIL illuminates if the PCM detects the above malfunction condition during first drive cycle. • FREEZE FRAME DATA is available. • DTCs are stored in the PCM memory.
POSSIBLE CAUSE	• Boost air temperature sensor malfunction • Open circuit between MAP/boost air temperature sensor terminal A and PCM terminal 2H • Open circuit between MAP/boost air temperature sensor terminal B and PCM terminal 1S • Short to the power circuit between MAP/boost air temperature sensor terminal A and PCM terminal 2H • Short to the power circuit between MAP/boost air temperature sensor terminal B and PCM terminal 1S • Connector or terminal malfunction • PCM malfunction

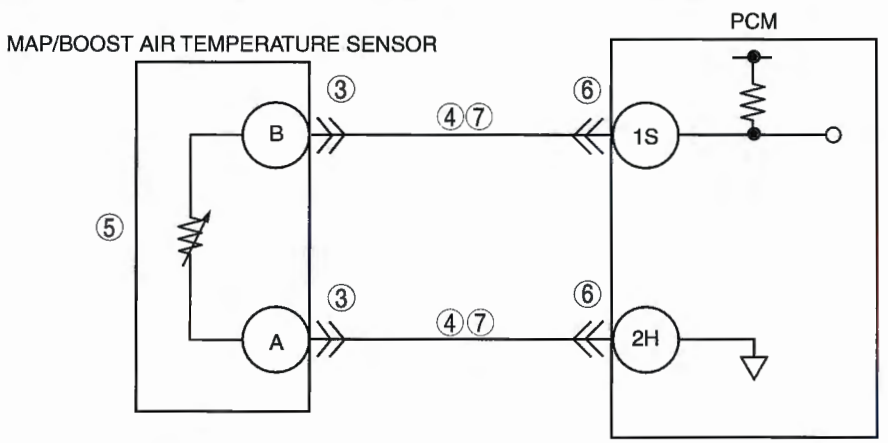

MAP/BOOST AIR TEMPERATURE SENSOR WIRING HARNESS-SIDE CONNECTOR

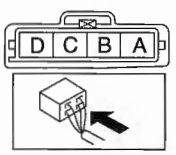

PCM WIRING HARNESS-SIDE CONNECTOR

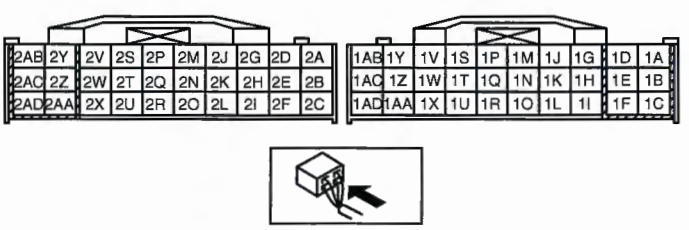

Diagnostic procedure

STEP	INSPECTION		ACTION
1	**VERIFY FREEZE FRAME DATA HAS BEEN RECORDED** • Has the FREEZE FRAME DATA been recorded?	Yes	Go to the next step.
		No	Record FREEZE FRAME DATA on the repair order, then go to the next step.
2	**VERIFY RELATED REPAIR INFORMATION AVAILABILITY** • Check for related Service Bulletins and/or on-line repair information availability. • Is any related repair information available?	Yes	Perform the repair or diagnosis according to the available repair information. • If the vehicle is not repaired, go to the next step.
		No	Go to the next step.
3	**INSPECT MAP/BOOST AIR TEMPERATURE SENSOR CONNECTOR FOR POOR CONNECTION** • Turn the ignition switch off. • Disconnect the MAP/boost air temperature sensor connector. • Inspect for poor connection (damaged, pulled-out pins, corrosion, etc.). • Is there any malfunction?	Yes	Repair or replace the terminal, then go to Step 8.
		No	Go to the next step.
4	**INSPECT MAP/BOOST AIR TEMPERATURE SENSOR CIRCUIT FOR SHORT TO POWER SUPPLY** • Turn the ignition switch to the ON position (Engine off). • Measure the voltage between the following terminals: — MAP/boost air temperature sensor terminal B (wiring harness-side) and body ground — MAP/boost air temperature sensor terminal A (wiring harness-side) and body ground • Is the voltage **B+**?	Yes	Repair or replace the wiring harness for a possible short to power supply, then go to Step 8.
		No	Go to the next step.
5	**INSPECT BOOST AIR TEMPERATURE SENSOR** • Inspect the boost air temperature sensor connector. (See 01–40B–32 BOOST AIR TEMPERATURE SENSOR INSPECTION [L3 WITH TC].) • Is there any malfunction?	Yes	Replace the MAP/boost air temperature sensor, then go to Step 8. (See 01–40B–31 MANIFOLD ABSOLUTE PRESSURE (MAP) SENSOR/BOOST AIR TEMPERATURE SENSOR REMOVAL/INSTALLATION [L3 WITH TC].)
		No	Go to the next step.
6	**INSPECT PCM CONNECTOR FOR POOR CONNECTION** • Turn the ignition switch off. • Disconnect the PCM connector. • Inspect for poor connection (damaged, pulled-out pins, corrosion, etc.). • Is there any malfunction?	Yes	Repair or replace the terminal, then go to Step 8.
		No	Go to the next step.
7	**INSPECT MAP/BOOST AIR TEMPERATURE SENSOR CIRCUIT FOR OPEN CIRCUIT** • Turn the ignition switch off. • Measure the voltage between the following terminals: — MAP/boost air temperature sensor terminal B (wiring harness-side) and PCM terminal 1S (wiring harness-side) — MAP/boost air temperature sensor terminal A (wiring harness-side) and PCM terminal 2H (wiring harness-side) • Is there continuity?	Yes	Go to the next step.
		No	Repair or replace the wiring harness for a possible open circuit, then go to the next step.
8	**VERIFY TROUBLESHOOTING OF DTC P0098 COMPLETED** • Make sure to connect all disconnected connectors. • Clear the DTC from the PCM memory using the WDS or equivalent. • Start the engine. • Is the same DTC present?	Yes	Replace the PCM, then go to the next step. (See 01–40B–6 PCM REMOVAL/INSTALLATION [L3 WITH TC].)
		No	Go to the next step.
9	**VERIFY AFTER REPAIR PROCEDURE** • Perform the "AFTER REPAIR PROCEDURE". (See 01–02B–8 AFTER REPAIR PROCEDURE [L3 WITH TC].) • Are any DTCs present?	Yes	Go to the applicable DTC inspection. (See 01–02B–14 DTC TABLE [L3 WITH TC].)
		No	DTC troubleshooting completed.

DTC P0101 [L3 WITH TC]

E6U010200100W33

DTC P0101	MAF circuit range/performance problem
DETECTION CONDITION	• PCM monitors the mass intake air flow amount when the engine is running. — If the mass intake air amount is **above 71.8 l/s** for **6 s** and engine speed is **below 2,000 rpm** with the engine running, the PCM determines that detected mass intake air flow amount is too high. — If the mass intake air flow amount is **below 9.7—87.3 l/s** (The value depends on engine speed.) for **6 s** and the engine speed is **above 1,000 rpm** with engine running and the throttle opening angle is **above 50%**, the PCM determines that the detected mass intake air flow amount is too low. **Diagnostic support note** • This is a continuous monitor (CCM). • MIL illuminates if the PCM detects the above malfunction condition in two consecutive drive cycles or in one drive cycle while the DTC for the same malfunction has been stored in the PCM. • PENDING CODE is available if the PCM detects the above malfunction condition during the first drive cycle. • FREEZE FRAME DATA is available. • DTCs are stored in the PCM memory.
POSSIBLE CAUSE	• MAF sensor malfunction • Electrical corrosion in MAF RETURN circuit • Voltage drops in the ground circuit

Diagnostic procedure

STEP	INSPECTION		ACTION
1	**VERIFY FREEZE FRAME DATA HAS BEEN RECORDED** • Has the FREEZE FRAME DATA been recorded?	Yes	Go to the next step.
		No	Record FREEZE FRAME DATA on the repair order, then go to the next step.
2	**VERIFY RELATED REPAIR INFORMATION AVAILABILITY** • Check for related Service Bulletins and/or on-line repair information availability. • Is any related repair information available?	Yes	Perform the repair or diagnosis according to the available repair information. • If the vehicle is not repaired, go to the next step.
		No	Go to the next step.
3	**VERIFY CURRENT INPUT SIGNAL STATUS IS CONCERN INTERMITTENT OR CONSTANT** • Connect the WDS or equivalent to DLC-2. • Start the engine. • Access the ECT, MAF, TP and RPM PIDs using the WDS or equivalent. • Warm-up the engine until the ECT PID is **above 70°C {158°F}**. • Idle engine for **5 s or more**. **Caution** • **While driving, always operate the vehicle in a safe and lawful manner.** • Drive the vehicle under the following two conditions: **Condition 1** — TP PID: **50—87.5%** — RPM PID: **above 1,000 rpm** — 4th gear **Condition 2** — TP PID: **above 80%** — RPM PID: **below 2,000 rpm** — gear in • Is the PENDING CODE for this DTC present?	Yes	Go to the next step.
		No	Intermittent concern exists. Go to INTERMITTENT CONCERNS TROUBLESHOOTING procedure. (See 01–03B–6 INTERMITTENT CONCERN TROUBLESHOOTING [L3 WITH TC])
4	**CHECK MAF SENSOR TERMINALS FOR ELECTRICAL CORROSION** • Turn the ignition switch off. • Disconnect the MAF sensor connector. • Check for poor connection (damaged, pulled-out terminals, corrosion, etc.). • Is any problem corrosion found?	Yes	Repair or the replace suspected terminal or MAF sensor, then go to Step 6.
		No	Go to the next step.

STEP	INSPECTION		ACTION
5	**INSPECT PCM CONNECTOR FOR POOR CONNECTION** • Disconnect the PCM connector. • Check for poor connection (damaged, pulled-out pins, corrosion, etc.). • Is there any malfunction?	Yes	Repair terminal, then go to the next step.
		No	Go to the next step.
6	**VERIFY TROUBLESHOOTING OF DTC P0101 COMPLETED** • Make sure to connect all disconnected connectors. • Turn ignition switch to the ON position (Engine off). • Clear the DTC from the PCM memory using the WDS or equivalent. • Start the engine. • Warm-up engine until ECT PID is **above 70°C {158°F}**. • Idle engine for **5 s or more.** **Caution** • **While performing the Drive Mode, always operate the vehicle in a safe and lawful manner.** • Drive the vehicle under the following two conditions: **Condition 1** — TP PID: **50—87.5%** — RPM PID: **above 1,000 rpm** — 4th gear **Condition 2** — TP PID: **above 80%** — RPM PID: **below 2,000 rpm** — gear in • Is the PENDING CODE for this DTC present?	Yes	Replace the PCM, then go to the next step.
		No	Go to the next step.
7	**VERIFY AFTER REPAIR PROCEDURE** • Perform the "After Repair Procedure". (See 01–02B–8 AFTER REPAIR PROCEDURE [L3 WITH TC]) • Are any DTCs present?	Yes	Go to the applicable DTC inspection. (See 01–02B–14 DTC TABLE [L3 WITH TC])
		No	Troubleshooting completed.

DTC P0102 [L3 WITH TC]

E6U010200100W34

DTC P0102	MAF circuit low input
DETECTION CONDITION	• PCM monitors input voltage from the MAF sensor when engine is running. If the input voltage is **below 0.2 V**, the PCM determines that the MAF circuit has a malfunction. **Diagnostic support note** • This is a continuous monitor (CCM). • MIL illuminates if the PCM detects the above malfunction condition during first drive cycle. • FREEZE FRAME DATA is available. • DTCs are stored in the PCM memory.
POSSIBLE CAUSE	• MAF sensor malfunction • Connector or terminal malfunction • Short to ground in the wiring harness between MAF/IAT sensor terminal C and PCM terminal 1P • Open circuit in the wiring harness between MAF/IAT sensor terminal C and PCM terminal 1P • Open circuit in the wiring harness between main relay and MAF/IAT sensor terminal A

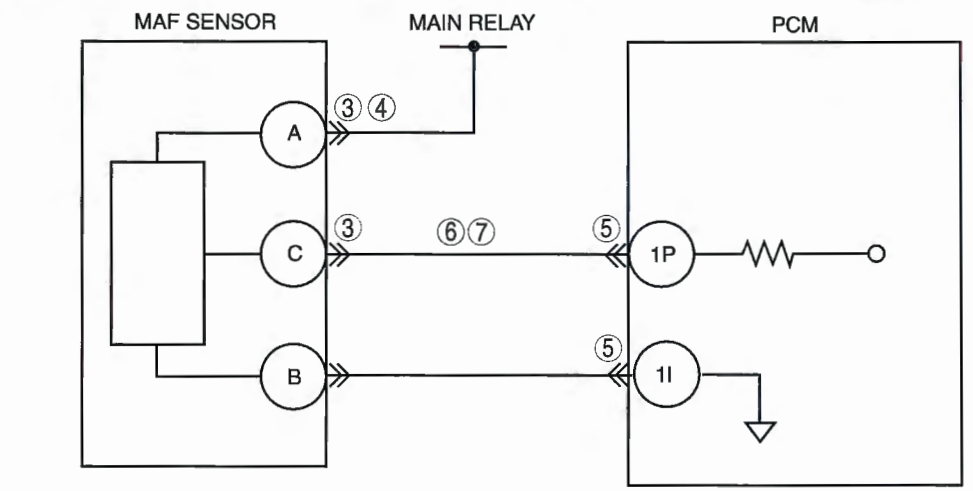

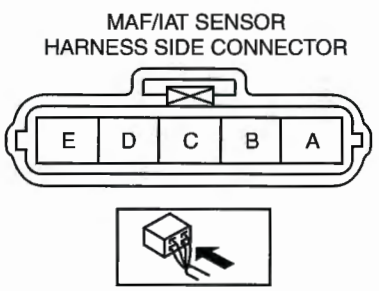

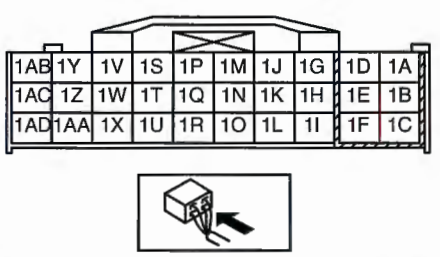

Diagnostic procedure

STEP	INSPECTION		ACTION
1	**VERIFY FREEZE FRAME DATA HAS BEEN RECORDED** • Has the FREEZE FRAME DATA been recorded?	Yes	Go to the next step.
		No	Record FREEZE FRAME DATA on the repair order, then go to the next step.
2	**VERIFY RELATED REPAIR INFORMATION AVAILABILITY** • Check for related Service Bulletins and/or on-line repair information availability. • Is any related repair information available?	Yes	Perform the repair or diagnosis according to the available repair information. • If the vehicle is not repaired, go to the next step.
		No	Go to the next step.
3	**INSPECT MAF SENSOR CONNECTOR FOR POOR CONNECTION** • Turn the ignition switch off. • Disconnect the MAF/IAT sensor connector. • Inspect for poor connection (such as damaged/ pulled-out pins, corrosion). • Is there any malfunction?	Yes	Repair or replace terminals, then go to Step 8.
		No	Go to the next step.
4	**INSPECT POWER SUPPLY CIRCUIT FOR OPEN CIRCUIT** • Turn ignition switch to the ON position (Engine off). • Inspect voltage at MAF/IAT sensor terminal A (harness-side). • Is voltage **B+**?	Yes	Go to the next step.
		No	Inspect for an open circuit in the wiring harness between MAF/IAT sensor terminal A (harness-side) and the main relay. Repair or replace the wiring harness, then go to Step 8.
5	**INSPECT PCM CONNECTOR FOR POOR CONNECTION** • Turn the ignition switch off. • Disconnect the PCM connector. • Inspect for poor connection (such as damaged/ pulled-out pins, corrosion). • Is there any malfunction?	Yes	Repair terminal, then go to Step 8.
		No	Go to the next step.
6	**INSPECT MAF SENSOR SIGNAL CIRCUIT FOR OPEN CIRCUIT** • Remove the PCM with the PCM connector connected. • Inspect for continuity between MAF/IAT sensor terminal C (harness-side) and PCM terminal 1P (harness-side). • Is there continuity?	Yes	Go to the next step.
		No	Repair or the replace suspected wiring harness, then go to Step 8.
7	**INSPECT MAF SENSOR SIGNAL CIRCUIT FOR SHORT CIRCUIT** • Inspect for continuity between the MAF/IAT sensor terminal C (harness-side) and body ground. • Is there continuity?	Yes	Repair or replace the suspected harness, then go to the next step.
		No	Replace the MAF/IAT sensor, then go to the next step.
8	**VERIFY TROUBLESHOOTING OF DTC P0102 COMPLETED** • Make sure to reconnect all disconnected connectors. • Turn ignition switch to the ON position (Engine off). • Clear the DTC from the PCM memory using the WDS or equivalent. • Start the engine and warm it up completely. • Is the same DTC present?	Yes	Replace PCM, then go to the next step. (See 01–40B–6 PCM REMOVAL/INSTALLATION [L3 WITH TC].)
		No	Go to the next step.
9	**VERIFY AFTER REPAIR PROCEDURE** • Perform the "After Repair Procedure". (See 01–02B–8 AFTER REPAIR PROCEDURE [L3 WITH TC].) • Are any DTCs present?	Yes	Go to the applicable DTC inspection. (See 01–02B–14 DTC TABLE [L3 WITH TC].)
		No	Troubleshooting completed.

DTC P0103 [L3 WITH TC]

E6U010200100W59

DTC P0103	MAF circuit high input
DETECTION CONDITION	• The PCM monitors input voltage from the MAF sensor when the engine is running. If the input voltage is **above 4.9 V**, the PCM determines that the MAF circuit has a malfunction. **Diagnostic support note** • This is a continuous monitor (CCM). • MIL illuminates if PCM detects the above malfunction condition during first drive cycle. • FREEZE FRAME DATA is available. • DTCs are stored in the PCM memory.
POSSIBLE CAUSE	• MAF sensor malfunction • Connector or terminal malfunction • Short to power supply in the wiring harness between MAF/IAT sensor terminal C and PCM terminal 1P • Open circuit in the wiring harness between MAF/IAT sensor terminal B and PCM terminal 1I

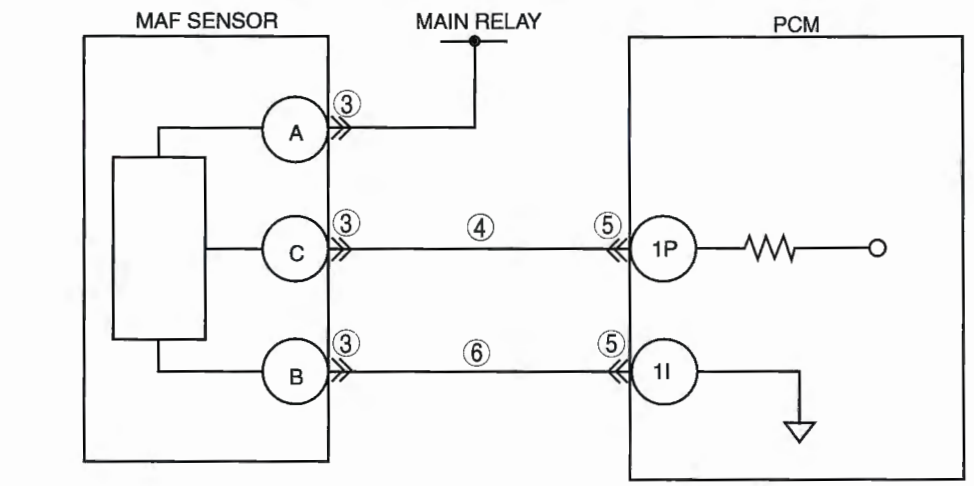

MAF/IAT SENSOR
HARNESS SIDE CONNECTOR

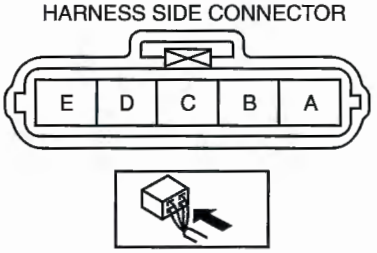

PCM
HARNESS SIDE CONNECTOR

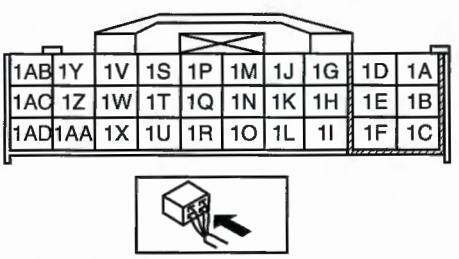

Diagnostic procedure

STEP	INSPECTION		ACTION
1	**VERIFY FREEZE FRAME DATA HAS BEEN RECORDED** • Has the FREEZE FRAME DATA been recorded?	Yes	Go to the next step.
		No	Record FREEZE FRAME DATA on the repair order, then go to the next step.
2	**VERIFY RELATED REPAIR INFORMATION AVAILABILITY** • Check for related Service Bulletins and/or on-line repair information availability. • Is any related repair information available?	Yes	Perform the repair or diagnosis according to the available repair information. • If the vehicle is not repaired, go to the next step.
		No	Go to the next step.
3	**INSPECT MAF SENSOR CONNECTOR FOR POOR CONNECTION** • Turn the ignition switch off. • Disconnect the MAF/IAT sensor connector. • Inspect for poor connection (such as damaged/ pulled-out pins, corrosion). • Is there any malfunction?	Yes	Repair or replace terminals, then go to Step 7.
		No	Go to the next step.
4	**INSPECT MAF SIGNAL CIRCUIT FOR SHORT TO POWER SUPPLY** • Turn ignition switch to the ON position (Engine off). • Measure voltage between MAF/IAT sensor terminal C (harness-side) and body ground. • Is voltage **0 V**?	Yes	Go to the next step.
		No	Repair or replace the suspected wiring harness, then go to Step 7.
5	**INSPECT PCM CONNECTOR FOR POOR CONNECTION** • Turn the ignition switch off. • Disconnect the PCM connector. • Inspect for poor connection (such as damaged/ pulled-out pins, corrosion). • Is there any malfunction?	Yes	Repair the terminal, then go to Step 7.
		No	Go to the next step.
6	**INSPECT MAF SENSOR GROUND CIRCUIT FOR OPEN CIRCUIT** • Remove the PCM with the PCM connector connected. • Inspect for continuity between MAF/IAT sensor terminal B (harness-side) and PCM terminal 1I. • Is there continuity?	Yes	Go to the next step.
		No	Repair or replace the suspected wiring harness, then go to the next step.
7	**VERIFY TROUBLESHOOTING OF DTC P0103 COMPLETED** • Make sure to reconnect all disconnected connectors. • Turn ignition switch to the ON position (Engine off). • Clear the DTC from the PCM memory using the WDS or equivalent. • Start the engine and warm it up completely. • Is same DTC present?	Yes	Replace the PCM, then go to the next step. (See 01–40B–6 PCM REMOVAL/INSTALLATION [L3 WITH TC].)
		No	Go to the next step.
8	**VERIFY AFTER REPAIR PROCEDURE** • Perform the "After Repair Procedure". (See 01–02B–8 AFTER REPAIR PROCEDURE [L3 WITH TC].) • Are any DTCs present?	Yes	Go to the applicable DTC inspection. (See 01–02B–14 DTC TABLE [L3 WITH TC].)
		No	Troubleshooting completed.

DTC P0107 [L3 WITH TC]

E6U010200100W36

DTC P0107	MAP sensor circuit low input
DETECTION CONDITION	• PCM monitors input voltage from the MAP sensor when the intake air temperature is **above –10 °C {14 °F}**. If the input voltage is **below 0.10 V**, the PCM determines that the MAP sensor circuit has a malfunction. **Diagnostic support note** • This is a continuous monitor (CCM). • MIL illuminates if the PCM detects the above malfunction condition during first drive cycle. • FREEZE FRAME DATA is available. • DTCs are stored in the PCM memory.
POSSIBLE CAUSE	• MAP sensor malfunction • Connector or terminal malfunction • Short to ground in the wiring harness between MAP sensor terminal D and PCM terminal 1J • Open circuit in the wiring harness between MAP sensor terminal C and PCM terminal 2K • MAP sensor signal circuit and MAP sensor ground circuit are shorted to each other. • PCM malfunction

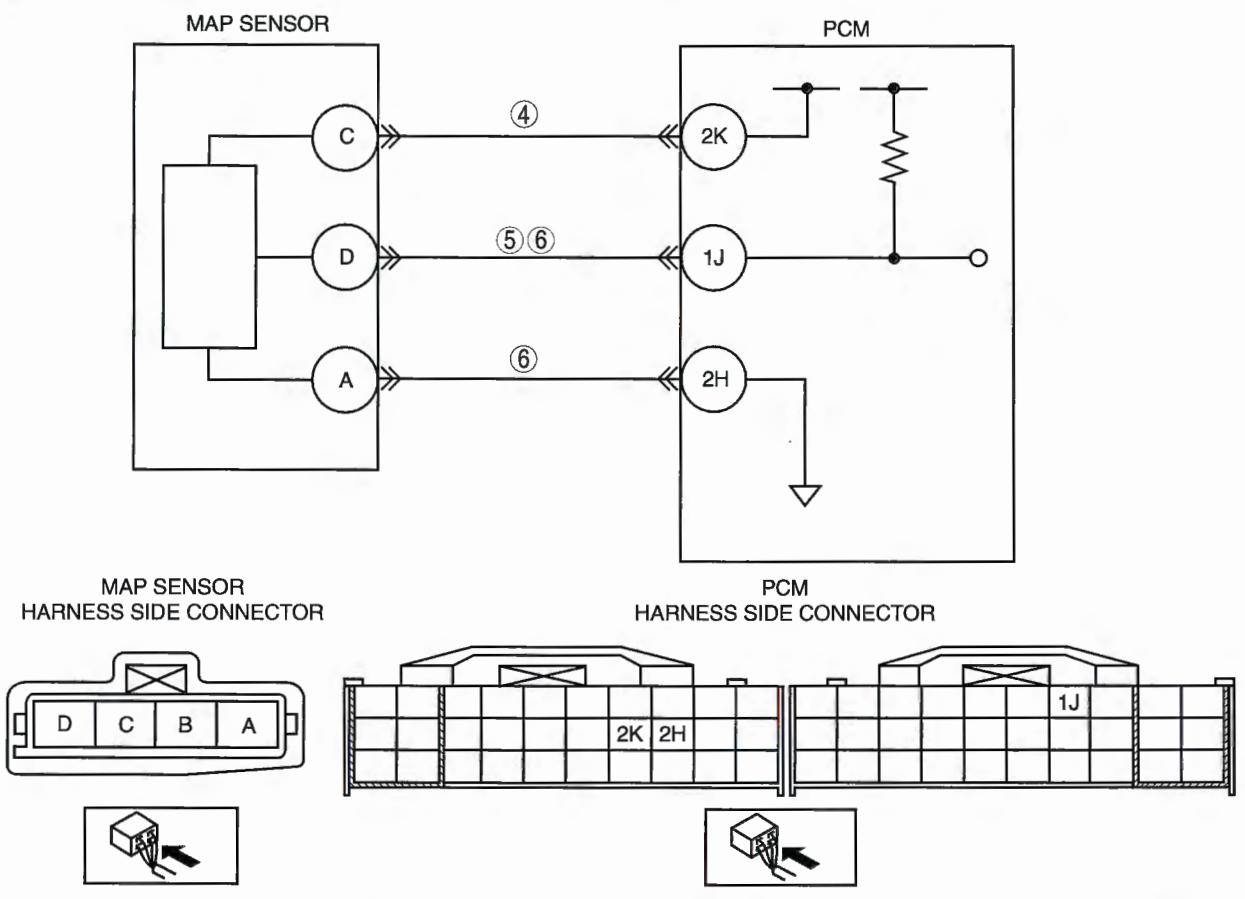

Diagnostic procedure

STEP	INSPECTION		ACTION
1	**VERIFY FREEZE FRAME DATA HAS BEEN RECORDED** • Has the FREEZE FRAME DATA been recorded?	Yes	Go to the next step.
		No	Recorded FREEZE FRAME DATA on the repair order, then go to the next step.
2	**VERIFY RELATED REPAIR INFORMATION AVAILABILITY** • Check for related Service Bulletins and/or on-line repair information availability. • Is any related repair information available?	Yes	Perform the repair or diagnosis according to the available repair information. • If the vehicle is not repaired, go to the next step.
		No	Go to the next step.
3	**VERIFY MAP PID WHEN MAP SENSOR CONNECTOR IS DISCONNECTED** • Disconnect the MAP sensor connector. • Is the voltage **above 4.9 V?**	Yes	Go to the next step.
		No	Go to step 5.
4	**INSPECT POWER SUPPLY CIRCUIT VOLTAGE AT MAP SENSOR CONNECTOR** **Note** • If DTC P0122 and P2228 are also retrieved with P0107, go to the CONSTANT VOLTAGE troubleshooting procedure. • Turn ignition switch to the ON position (Engine off). • Measure voltage between MAP sensor terminal C (harness-side) and body ground. • Is the voltage **within 4.5—5.5 V?**	Yes	Check for a poor connection of MAP sensor terminal C (harness-side). • Repair or replace the terminal if necessary. • If normal, replace the MAP sensor. Then go to Step 7.
		No	Check for an open circuit between PCM terminal 2K (harness-side) and MAP sensor terminal C (harness-side). Repair or replace the suspected wiring harness, then go to Step 7.
5	**INSPECT MAP SENSOR SIGNAL CIRCUIT FOR SHORT TO GROUND** • Turn the ignition switch off. • Disconnect the PCM connector. • Inspect for continuity between MAP sensor terminal D (harness-side) and body ground. • Is there continuity?	Yes	Repair or replace the suspected wiring harness, then go to Step 7.
		No	Go to the next step.
6	**INSPECT MAP SENSOR SIGNAL AND GROUND CIRCUIT FOR SHORT EACH OTHER** • Check for continuity between MAP sensor terminals D and A (harness-side). • Is there continuity?	Yes	Repair or replace the suspected wiring harness, then go to the next step.
		No	Go to the next step.
7	**VERIFY TROUBLESHOOTING OF DTC P0107 COMPLETED** • Make sure to reconnect all disconnected connectors. • Turn ignition switch to the ON position (Engine off). • Clear the DTC from the PCM memory using the WDS or equivalent. • Start engine and warm it up completely. • Is same DTC present?	Yes	Replace the PCM, then go to the next step. (See 01–40B–6 PCM REMOVAL/INSTALLATION [L3 WITH TC].)
		No	Go to the next step.
8	**VERIFY AFTER REPAIR PROCEDURE** • Perform the "After Repair Procedure". (See 01–02B–8 AFTER REPAIR PROCEDURE [L3 WITH TC].) • Are any DTCs present?	Yes	Go to the applicable DTC inspection. (See 01–02B–14 DTC TABLE [L3 WITH TC].)
		No	Troubleshooting completed.

DTC P0108 [L3 WITH TC]

E6U010200100W37

DTC P0108	MAP sensor circuit high input
DETECTION CONDITION	• PCM monitors input voltage from the MAP sensor when the intake air temperature is **above –10 °C {14 °F}** If the input voltage is **above 4.9 V**, the PCM determines that MAP sensor circuit has a malfunction. **Diagnostic support note** • This is a continuous monitor (CCM). • MIL illuminates if the PCM detects the above malfunction condition during first drive cycle. • FREEZE FRAME DATA is available. • DTCs are stored in the PCM memory.
POSSIBLE CAUSE	• MAP sensor malfunction • Connector or terminal malfunction • Open circuit in the wiring harness between MAP sensor terminal A and PCM terminal 2H • Open circuit in the wiring harness between MAP sensor terminal D and PCM terminal 1J • MAP sensor signal circuit short to the constant voltage supply circuit • PCM malfunction

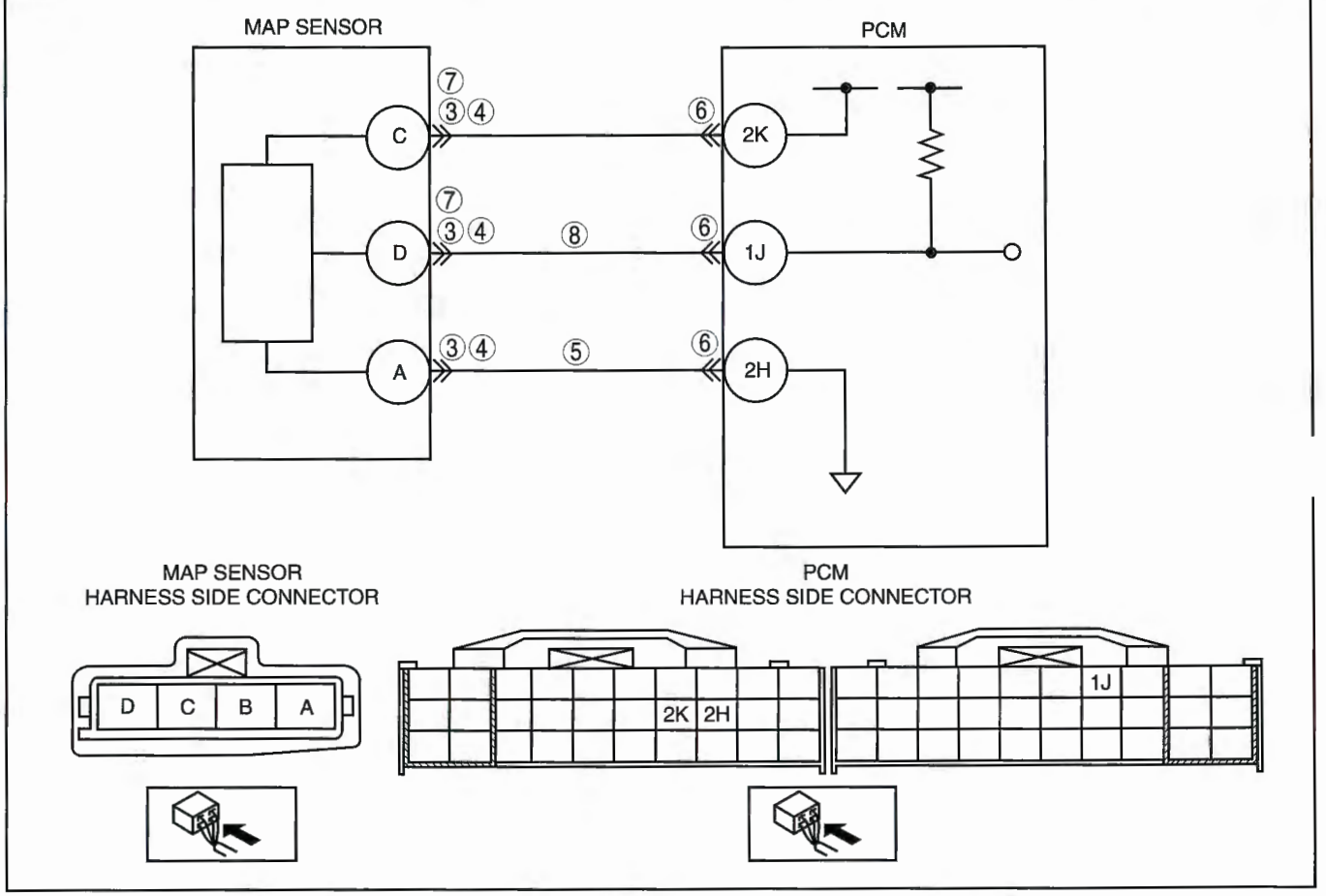

Diagnostic procedure

STEP	INSPECTION		ACTION
1	**VERIFY FREEZE FRAME DATA HAS BEEN RECORDED** • Has the FREEZE FRAME DATA been recorded?	Yes	Go to the next step.
		No	Record FREEZE FRAME DATA on the repair order, then go to the next step.
2	**VERIFY RELATED REPAIR INFORMATION AVAILABILITY** • Check for related Service Bulletins and/or on-line repair information availability. • Is any related repair information available?	Yes	Perform the repair or diagnosis according to the available repair information. • If the vehicle is not repaired, go to the next step.
		No	Go to the next step.
3	**INSPECT CONNECTION OF MAP SENSOR CONNECTOR** • Turn the ignition switch off. • Verify that the MAP sensor connector is connected securely. • Is the connection normal?	Yes	Go to the next step.
		No	Reconnect the connector, then go to Step 9.
4	**INSPECT MAP SENSOR CONNECTOR FOR POOR CONNECTION** • Disconnect the MAP sensor connector. • Inspect for poor connection (such as damaged/ pulled-out pins, corrosion). • Is there any malfunction?	Yes	Repair or replace the suspected terminal, then go to Step 9.
		No	Go to the next step.
5	**VERIFY MAP SENSOR GROUND CIRCUIT FOR OPEN CIRCUIT** • Inspect for continuity between MAP sensor terminal A (harness-side) and body ground. • Is there continuity?	Yes	Go to the next step.
		No	Inspect for an open circuit between PCM terminal 2H (harness-side) and MAP sensor terminal A (harness-side). Repair or replace the suspected wiring harness, then go to Step 9.
6	**INSPECT PCM CONNECTOR FOR POOR CONNECTION** • Disconnect the PCM connector. • Inspect for poor connection (such as damaged, pulled-out pins, corrosion). • Is there any malfunction?	Yes	Repair terminal, then go to Step 9.
		No	Go to the next step.
7	**VERIFY MAP SENSOR SIGNAL CIRCUIT FOR SHORT TO CONSTANT VOLTAGE CIRCUIT** • Inspect for continuity between MAP sensor terminal D and C (harness-side). • Is there continuity?	Yes	Repair or replace the suspected wiring harness, then go to Step 9.
		No	Go to the next step.
8	**VERIFY MAP SENSOR SIGNAL CIRCUIT FOR OPEN CIRCUIT** • Inspect for continuity between MAP sensor terminal D (harness-side) and PCM terminal 1J (harness-side). • Is there continuity?	Yes	Go to the next step.
		No	Repair or replace the suspected wiring harness, then go to the next step.
9	**VERIFY TROUBLESHOOTING OF DTC P0108 COMPLETED** • Make sure to reconnect all disconnected connectors. • Turn ignition switch to the ON position (Engine off). • Clear the DTC from the PCM memory using the WDS or equivalent. • Start the engine and warm it up completely. • Is same DTC present?	Yes	Replace PCM, then go to the next step. (See 01–40B–6 PCM REMOVAL/INSTALLATION [L3 WITH TC].)
		No	Go to the next step.
10	**VERIFY AFTER REPAIR PROCEDURE** • Perform the "After Repair Procedure". (See 01–02B–8 AFTER REPAIR PROCEDURE [L3 WITH TC].) • Are any DTCs present?	Yes	Go to applicable inspection. (See 01–02B–14 DTC TABLE [L3 WITH TC].)
		No	Troubleshooting completed.

DTC P0111 [L3 WITH TC]

E6U010200100W38

DTC P0111	IAT circuit performance problem
DETECTION CONDITION	• If the intake air temperature is higher than the engine coolant temperature by **18 °C {32.4 °F}** for **1.2 s** with the ignition switch turn in the ON position*, the PCM determines that there is an IAT sensor circuit range/performance problem. *: Ignition switch is in the ON position when **6 h or more** have passed since the ignition switch was turned off **Diagnostic support note** • This is a continuous monitor (CCM). • MIL illuminates if the PCM detects the above malfunction condition in two consecutive drive cycles or in one drive cycle while the DTC for the same malfunction has been stored in the PCM. • PENDING CODE is available if the PCM detects the above malfunction condition during first drive cycle. • FREEZE FRAME DATA is available. • DTCs are stored in PCM memory.
POSSIBLE CAUSE	• IAT sensor malfunction • Poor connection at MAF/IAT sensor or PCM connector • PCM malfunction

Diagnostic procedure

STEP	INSPECTION		ACTION
1	**VERIFY FREEZE FRAME DATA HAS BEEN RECORDED** • Has the FREEZE FRAME DATA been recorded?	Yes	Go to the next step.
		No	Record FREEZE FRAME DATA on the repair order, then go to the next step.
2	**VERIFY RELATED REPAIR INFORMATION AVAILABILITY** • Check for related Service Bulletins and/or on-line repair information availability. • Is any related repair information available?	Yes	Perform the repair or diagnosis according to the available repair information. • If the vehicle is not repaired, go to the next step.
		No	Go to the next step.
3	**INSPECT MAF/IAT SENSOR CONNECTOR FOR POOR CONNECTION** • Turn the ignition switch off. • Disconnect the MAF/IAT sensor connector. • Inspect for poor connection (such as damaged/pulled-out pins, corrosion). • Is there any malfunction?	Yes	Repair or replace the terminal, then go to Step 6.
		No	Go to the next step.
4	**INSPECT IAT SENSOR** • Inspect IAT sensor. (See 01–40B–33 INTAKE AIR TEMPERATURE (IAT) SENSOR INSPECTION [L3 WITH TC].) • Is IAT sensor normal?	Yes	Replace MAF/IAT sensor, then go to Step 6.
		No	Go to the next step.
5	**INSPECT PCM CONNECTOR FOR POOR CONNECTION** • Disconnect the PCM connector. • Inspect for poor connection (such as damaged/pulled-out pins, corrosion). • Is there any malfunction?	Yes	Repair or replace the terminal, then go to Step 6.
		No	Go to the next step.
6	**VERIFY TROUBLESHOOTING OF DTC P0111 COMPLETED** • Make sure to reconnect all disconnected connectors. • Clear the DTC from the PCM memory using the WDS or equivalent. • Start the engine and run the engine under the FREEZE FRAME DATA condition. • Is PENDING CODE for this DTC present?	Yes	Replace PCM, then go to the next step. (See 01–40B–6 PCM REMOVAL/INSTALLATION [L3 WITH TC].)
		No	Go to the next step.
7	**VERIFY AFTER REPAIR PROCEDURE** • Perform the "After Repair Procedure". (See 01–02B–8 AFTER REPAIR PROCEDURE [L3 WITH TC].) • Are any DTCs present?	Yes	Go to the applicable DTC inspection. (See 01–02B–14 DTC TABLE [L3 WITH TC].)
		No	Troubleshooting completed.

DTC P0112 [L3 WITH TC]

E6U010200100W39

DTC P0112	IAT circuit low input
DETECTION CONDITION	• The PCM monitors the IAT sensor signal. If the PCM detects on IAT sensor voltage **below 0.06 V**, the PCM determines that the IAT sensor circuit has a malfunction. **Diagnostic support note** • This is a continuous monitor (CCM). • MIL illuminates if the PCM detects the above malfunction condition during first drive cycle. • FREEZE FRAME DATA is available. • DTCs are stored in the PCM memory.
POSSIBLE CAUSE	• IAT sensor malfunction • Poor connection at the MAF/IAT sensor or PCM connector • Short to ground between MAF/IAT sensor terminal D and PCM terminal 2V • Short to each harness IAT signal circuit and IAT ground circuit. • PCM malfunction

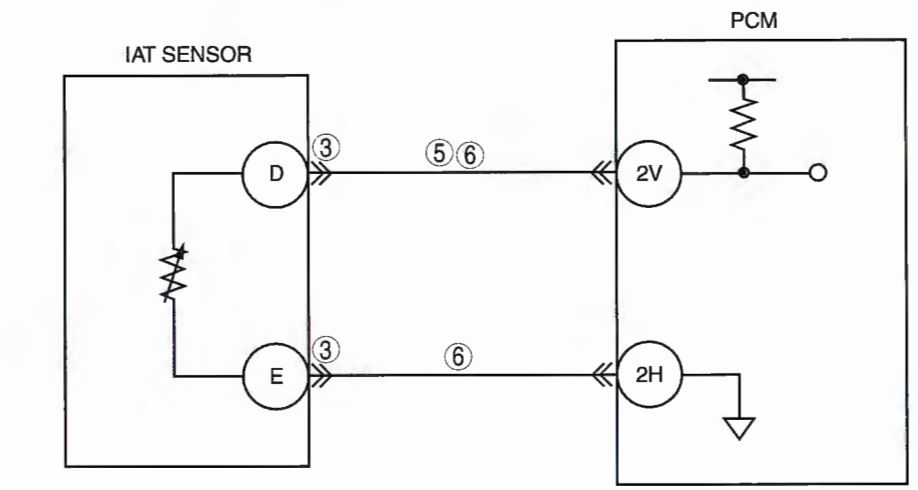

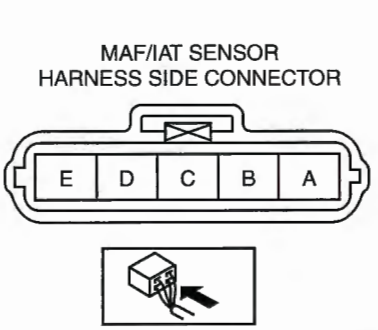

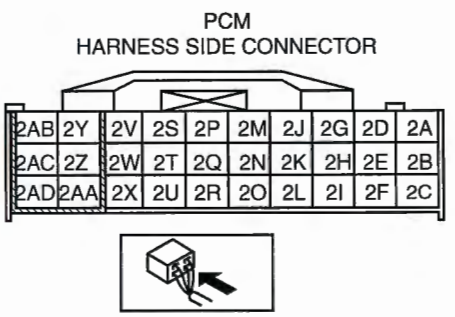

Diagnostic procedure

STEP	INSPECTION		ACTION
1	**VERIFY FREEZE FRAME DATA HAS BEEN RECORDED** • Has the FREEZE FRAME DATA been recorded?	Yes	Go to the next step.
		No	Record FREEZE FRAME DATA on the repair order, then g to the next step.
2	**VERIFY RELATED REPAIR INFORMATION AVAILABILITY** • Check for related Service Bulletins and/or on-line repair information availability. • Is any related repair information available?	Yes	Perform the repair or diagnosis according to the available repair information. • If the vehicle is not repaired, go to the next step.
		No	Go to the next step.
3	**INSPECT IAT SENSOR TERMINAL** • Turn the ignition switch off. • Disconnect the MAF/IAT sensor connector. • Inspect for bent terminal of MAF/IAT sensor terminals D and E (part-side). • Is there any malfunction?	Yes	Repair or replace the terminal, then go to Step 7.
		No	Go to the next step.
4	**CLASSIFY IAT SENSOR MALFUNCTION OR HARNESS MALFUNCTION** • Connect the WDS or equivalent to DLC-2. • Access the IAT PID. • Verify the IAT value when disconnecting the MAF/IAT sensor connector. • Does the IAT value change?	Yes	Replace the MAF/IAT sensor, then go to Step 7.
		No	Go to the next step.
5	**INSPECT IAT SIGNAL CIRCUIT FOR SHORT TO GROUND** • Turn the ignition switch off. • Disconnect the PCM connector. • Inspect for continuity between MAF/IAT sensor terminal D (harness-side) and body ground. • Is there continuity?	Yes	Repair or replace the wiring harness for a short to ground, then go to Step 7.
		No	Go to the next step.
6	**INSPECT IAT CIRCUITS FOR SHORT** • Inspect for continuity between MAF/IAT sensor terminals D and E (harness-side). • Is there continuity?	Yes	Repair or the replace harness for a short, then go to Step 7
		No	Go to the next step.
7	**VERIFY TROUBLESHOOTING OF DTC P0112 COMPLETED** • Make sure to reconnect all disconnected connectors. • Turn ignition switch to the ON position (Engine off). • Clear the DTC from the PCM memory using the WDS or equivalent. • Start the engine and warm it up completely. • Is same DTC present?	Yes	Replace PCM, then go to the next step. (See 01–40B–6 PCM REMOVAL/INSTALLATION [L3 WITH TC].)
		No	Go to the next step.
8	**VERIFY AFTER REPAIR PROCEDURE** • Perform the "After Repair Procedure". (See 01–02B–8 AFTER REPAIR PROCEDURE [L3 WITH TC].) • Are any DTCs present?	Yes	Go to the applicable DTC inspection. (See 01–02B–14 DTC TABLE [L3 WITH TC].)
		No	Troubleshooting completed.

DTC P0113 [L3 WITH TC]

E6U010200100W40

DTC P0113	IAT circuit high input
DETECTION CONDITION	• The PCM monitors the IAT sensor signal. If the PCM detected IAT sensor voltage **above 4.9 V**, the PCM determines that the IAT sensor circuit has a malfunction. **Diagnostic support note** • This is a continuous monitor (CCM). • MIL illuminates if the PCM detects the above malfunction condition during first drive cycle. • FREEZE FRAME DATA is available. • DTCs are stored in the PCM memory.
POSSIBLE CAUSE	• IAT sensor malfunction • Open circuit between MAF/IAT sensor terminal D and PCM terminal 2V • Short to the power supply between MAF/IAT sensor terminal D and PCM terminal 2V • Open circuit between MAF/IAT sensor terminal E and PCM terminal 2H • Poor connection at the MAF/IAT sensor or the PCM connector.

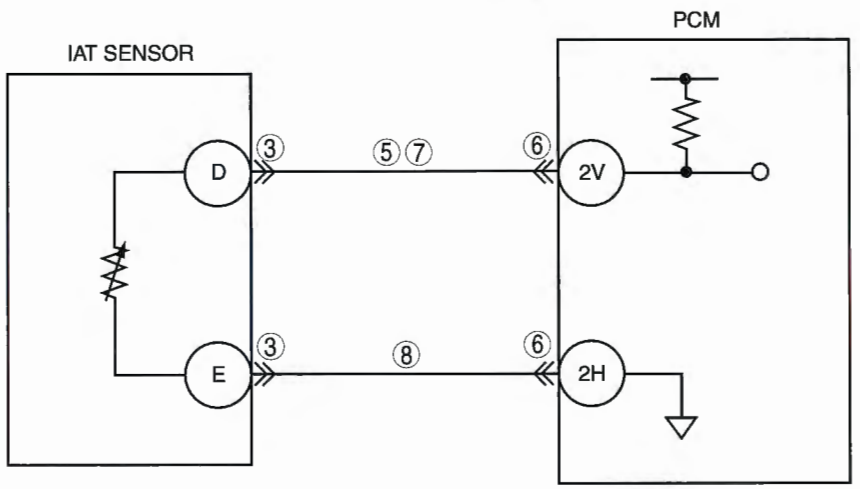

MAF/IAT SENSOR
HARNESS SIDE CONNECTOR

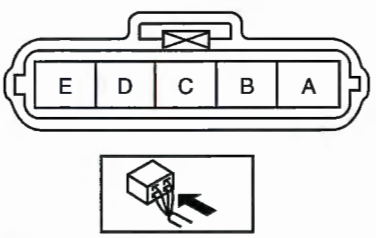

PCM
HARNESS SIDE CONNECTOR

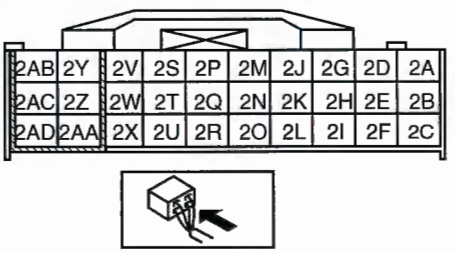

Diagnostic procedure

STEP	INSPECTION		ACTION
1	**VERIFY FREEZE FRAME DATA HAS BEEN RECORDED** • Has the FREEZE FRAME DATA been recorded?	Yes	Go to the next step.
		No	Record FREEZE FRAME DATA on the repair order, then g to the next step.
2	**VERIFY RELATED REPAIR INFORMATION AVAILABILITY** • Check for related Service Bulletins and/or on-line repair information availability. • Is any related repair information available?	Yes	Perform the repair or diagnosis according to the available repair information. • If the vehicle is not repaired, go to the next step.
		No	Go to the next step.
3	**INSPECT IAT SENSOR CONNECTOR FOR POOR CONNECTION** • Turn the ignition switch off. • Disconnect the MAF/IAT sensor connector. • Inspect for poor connection (such as damaged/ pulled-out pins, corrosion). • Is there any malfunction?	Yes	Repair or replace the terminal, then go to Step 9.
		No	Go to the next step.
4	**CLASSIFY IAT SENSOR MALFUNCTION OR HARNESS MALFUNCTION** • Connect the WDS or equivalent to the DLC-2. • Access the IAT PID. • Connect a jumper wire between MAF/IAT sensor terminals D and E (harness-side). • Verify the IAT value. • Is the voltage **below 4.9 V**?	Yes	Replace the MAF/IAT sensor, then go to Step 9.
		No	Go to the next step.
5	**INSPECT IAT SENSOR SIGNAL CIRCUIT FOR SHORT TO POWER SUPPLY** • Turn ignition switch to the ON position (Engine off). • Measure the voltage between MAF/IAT sensor terminal D (harness-side) and body ground. • Is the voltage **B+**?	Yes	Repair or the wiring replace harness for a short to the power supply, then go to Step 9.
		No	Go to the next step.
6	**INSPECT PCM CONNECTOR FOR POOR CONNECTION** • Turn the ignition switch off. • Disconnect PCM connector. • Inspect PCM terminals 2V and 2H (harness-side) for tightness using a feeler tool. • Is there any malfunction?	Yes	Repair or replace the terminal, then go to Step 9.
		No	Go to the next step.
7	**INSPECT IAT SENSOR SIGNAL CIRCUIT FOR OPEN CIRCUIT** • Inspect for continuity between MAF/IAT sensor terminal D (harness-side) and PCM terminal 2V (harness-side). • Is there continuity?	Yes	Go to the next step.
		No	Repair or replace the wiring harness for an open circuit, then go to Step 9.
8	**INSPECT IAT SENSOR GROUND CIRCUIT FOR OPEN CIRCUIT** • Inspect for continuity between MAF/IAT sensor terminal E (harness-side) and PCM terminal 2H (harness-side). • Is there continuity?	Yes	Go to the next step.
		No	Repair or replace the wi ring harness for an open circuit, then go to the next step.
9	**VERIFY TROUBLESHOOTING OF DTC P0113 COMPLETED** • Make sure to reconnect all disconnected connectors. • Turn ignition switch to the ON position (Engine off). • Clear the DTC from the PCM memory using the WDS or equivalent. • Start the engine and warm it up completely. • Is same DTC present?	Yes	Replace the PCM, then go to the next step. (See 01–40B–6 PCM REMOVAL/INSTALLATION [L3 WITH TC].)
		No	Go to the next step.
10	**VERIFY AFTER REPAIR PROCEDURE** • Perform the "After Repair Procedure". (See 01–02B–8 AFTER REPAIR PROCEDURE [L3 WITH TC].) • Are any DTCs present?	Yes	Go to the applicable DTC inspection. (See 01–02B–14 DTC TABLE [L3 WITH TC].)
		No	Troubleshooting completed.

DTC P0116 [L3 WITH TC]

E6U010200100W41

DTC P0116	ECT circuit range/performance problem
DETECTION CONDITION	• The PCM monitors the maximum value and minimum value of engine coolant temperature when the engine is started and **5 min** have been passed after leaving the vehicle **6 h or more**. If the difference between the maximum and the minimum values of the engine coolant temperature is **below 6°C {10.8°F}**, the PCM determines that there is an ECT circuit range/performance problem. **Diagnostic support note** • This is a continuous monitor (CCM). • The MIL illuminates if the PCM detects the above malfunction condition during first drive cycle. • FREEZE FRAME DATA is available. • DTCs are stored in the PCM memory.
POSSIBLE CAUSE	• ECT sensor malfunction • Connector or terminal malfunction • PCM malfunction

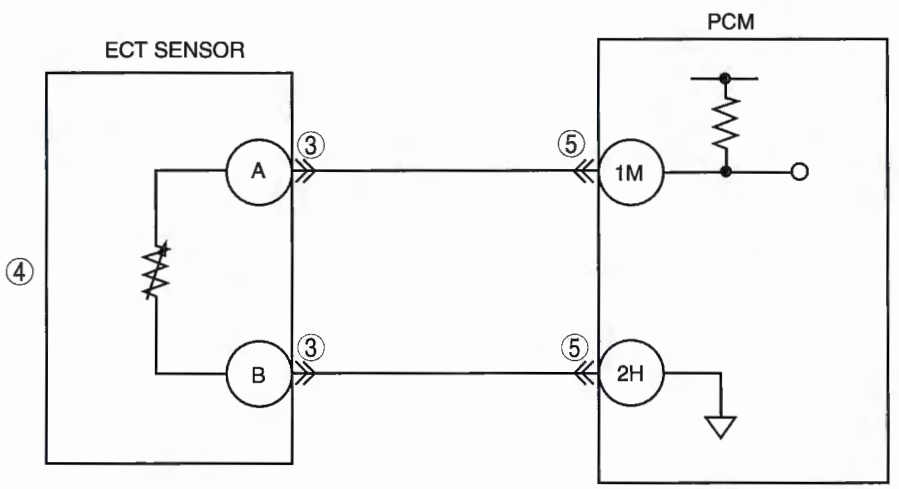

ECT SENSOR
WIRING HARNESS-SIDE CONNECTOR

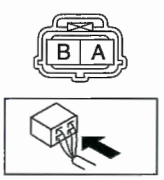

PCM
WIRING HARNESS-SIDE CONNECTOR

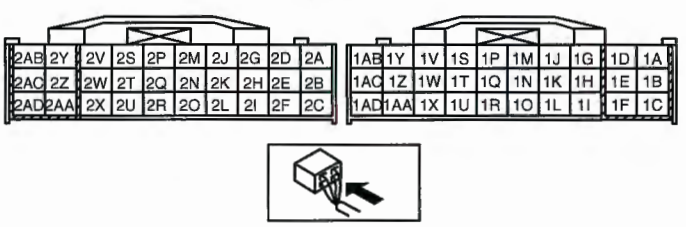

Diagnostic procedure

STEP	INSPECTION		ACTION
1	**VERIFY FREEZE FRAME DATA HAS BEEN RECORDED** • Has the FREEZE FRAME DATA been recorded?	Yes	Go to ne, then go next step.
		No	Record FREEZE FRAME DATA on the repair order, then g to the next step.
2	**VERIFY RELATED REPAIR INFORMATION AVAILABILITY** • Check for related Service Bulletins and/or on-line repair information availability. • Is any related repair information available?	Yes	Perform the repair or diagnosis according to the available repair information. • If the vehicle is not repaired, go to the next step.
		No	Go to the next step.
3	**INSPECT ECT SENSOR CONNECTOR FOR POOR CONNECTION** • Turn the ignition switch off. • Disconnect the ECT sensor connector. • Inspect for poor connection (damaged, pulled-out pins, corrosion, etc.). • Is there any malfunction?	Yes	Repair or replace the terminal, then go to Step 6.
		No	Go to the next step.
4	**INSPECT ECT SENSOR** • Inspect the ECT sensor. (See 01–40B–30 ENGINE COOLANT TEMPERATURE (ECT) SENSOR INSPECTION [L3 WITH TC].) • Is there any malfunction?	Yes	Replace the ECT sensor, then go to Step 6. (See 01–40B–30 ENGINE COOLANT TEMPERATURE (ECT) SENSOR REMOVAL/INSTALLATION [L3 WITH TC].)
		No	Go to the next step.
5	**INSPECT PCM CONNECTOR FOR POOR CONNECTION** • Turn the ignition switch off. • Disconnect the PCM connector. • Inspect for poor connection (damaged, pulled-out pins, corrosion, etc.). • Is there any malfunction?	Yes	Repair or replace the terminal, then go to the next step.
		No	Go to the next step.
6	**VERIFY TROUBLESHOOTING OF DTC P0116 COMPLETED** • Leave vehicle for **8 h.** • Make sure to reconnect all disconnected connectors. • Clear the DTC from the PCM memory using the WDS or equivalent. • Start the engine and wait for **5 min.** • Is the same DTC present?	Yes	Replace the PCM, then go to the next step. (See 01–40B–6 PCM REMOVAL/INSTALLATION [L3 WIT TC].)
7	**VERIFY AFTER REPAIR PROCEDURE** • Perform the "AFTER REPAIR PROCEDURE". (See 01–02B–8 AFTER REPAIR PROCEDURE [L3 WITH TC]) • Are any DTCs present?	Yes	Go to the applicable DTC inspection. (See 01–02B–14 DTC TABLE [L3 WITH TC])
		No	DTC troubleshooting completed.

DTC P0117 [L3 WITH TC]

E6U010200100W42

DTC P0117	ECT sensor circuit low input
DETECTION CONDITION	• The PCM monitors the ECT sensor signal. If the PCM detects the ECT sensor voltage **below 0.2 V**, the PCM determines that the ECT sensor circuit has a malfunction. **Diagnostic support note** • This is a continuous monitor (Engine cooling system). • The MIL illuminates if the PCM detects the above malfunction condition during first drive cycle. • FREEZE FRAME DATA is available. • DTCs are stored in the PCM memory.
POSSIBLE CAUSE	• ECT sensor malfunction • Connect or terminal malfunction • Short to ground in the wiring harness between ECT sensor terminal A and PCM connector terminal 1M • Short to each wiring harness in ECT signal circuit and ECT ground circuit • PCM malfunction

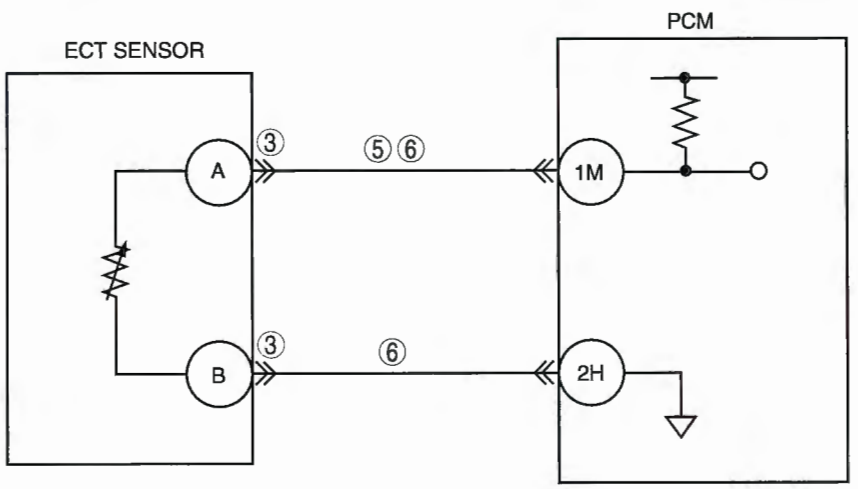

ECT SENSOR
WIRING HARNESS-SIDE CONNECTOR

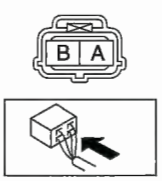

PCM
WIRING HARNESS-SIDE CONNECTOR

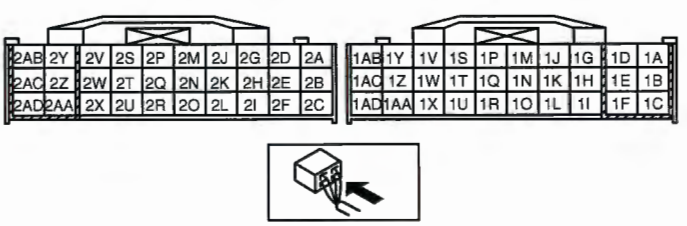

Diagnostic procedure

STEP	INSPECTION		ACTION
1	**VERIFY FREEZE FRAME DATA AND DIAGNOSTIC MONITORING TEST RESULTS HAVE BEEN RECORDED** • Have the FREEZE FRAME DATA and DIAGNOSTIC MONITORING TEST RESULTS (Engine cooling system related) been recorded?	Yes	Go to the next step.
		No	Record the FREEZE FRAME DATA and DIAGNOSTIC MONITORING TEST RESULTS on the repair order, then go to the next step.
2	**VERIFY RELATED REPAIR INFORMATION AVAILABILITY** • Verify related service Bulletins and/or on-line repair information availability. • Is any related repair information available?	Yes	Perform the repair or diagnosis according to the available repair information. • If the vehicle is not repaired, go to the next step.
		No	Go to the next step.
3	**INSPECT FOR BENT TERMINALS** • Turn the ignition switch off. • Disconnect the ECT sensor connector. • Inspect ECT sensor terminals A and B (part-side) for bending. • Is there any malfunction?	Yes	Repair or replace the terminal, then go to Step 7.
		No	Go to the next step.
4	**CLASSIFY ECT SENSOR MALFUNCTION OR WIRING HARNESS MALFUNCTION** • Connect the WDS or equivalent to DLC-2. • Access the ECT PID. • Verify the ECT value when disconnecting the ECT sensor connector. • Does the ECT value change?	Yes	Replace the ECT sensor, then go to Step 7. (See 01–40B–30 ENGINE COOLANT TEMPERATURE (ECT) SENSOR REMOVAL/INSTALLATION [L3 WITH TC].)
		No	Go to the next step.
5	**INSPECT ECT SIGNAL CIRCUIT FOR SHORT TO GROUND** • Turn the ignition switch off. • Inspect for continuity between ECT sensor terminal A (wiring harness-side) and body ground. • Is there continuity?	Yes	Repair or replace the wiring harness for a short to ground, then go to Step 7.
		No	Go to the next step.
6	**INSPECT ECT CIRCUIT FOR SHORT TO WIRING HARNESSES** • Inspect for continuity between ECT sensor terminal A and B (wiring harness-side). • Is there continuity?	Yes	Repair or replace the wiring harness for a short, then go to the next step.
		No	Go to the next step.
7	**VERIFY TROUBLESHOOTING OF DTC P0117 COMPLETED** • Make sure to reconnect all disconnected connectors. • Clear the DTC from the PCM memory using the WDS or equivalent. • Start the engine. • Is the same DTC present?	Yes	Replace the PCM, then go to the next step. (See 01–40B–6 PCM REMOVAL/INSTALLATION [L3 WITH TC].)
		No	Go to the next step.
8	**VERIFY AFTER REPAIR PROCEDURE** • Perform the "AFTER REPAIR PROCEDURE". (See 01–02B–8 AFTER REPAIR PROCEDURE [L3 WITH TC].) • Are any DTCs present?	Yes	Go to the applicable DTC troubleshooting. (See 01–02B–14 DTC TABLE [L3 WITH TC].)
		No	Troubleshooting completed.

DTC P0118 [L3 WITH TC]

E6U010200100W43

DTC P0118	ECT sensor circuit high input
DETECTION CONDITION	• The PCM monitors the ECT sensor signal. If the PCM detects the ECT sensor voltage is **above 4.6 V**, the PCM determines that the ECT sensor circuit has a malfunction. **Diagnostic support note** • This is a continuous monitor (Engine cooling system). • The MIL illuminates if the PCM detects the above malfunction condition during first drive cycle. • FREEZE FRAME DATA is available. • DTCs are stored in the PCM memory.
POSSIBLE CAUSE	• ECT sensor malfunction • Connect or terminal malfunction • Open circuit in the wiring harness between ECT sensor terminal A and PCM terminal 1M • Short to power supply in the wiring harness between ECT sensor terminal A and PCM terminal 1M • Open circuit in the wiring harness between ECT sensor terminal B and PCM terminal 2H • PCM malfunction

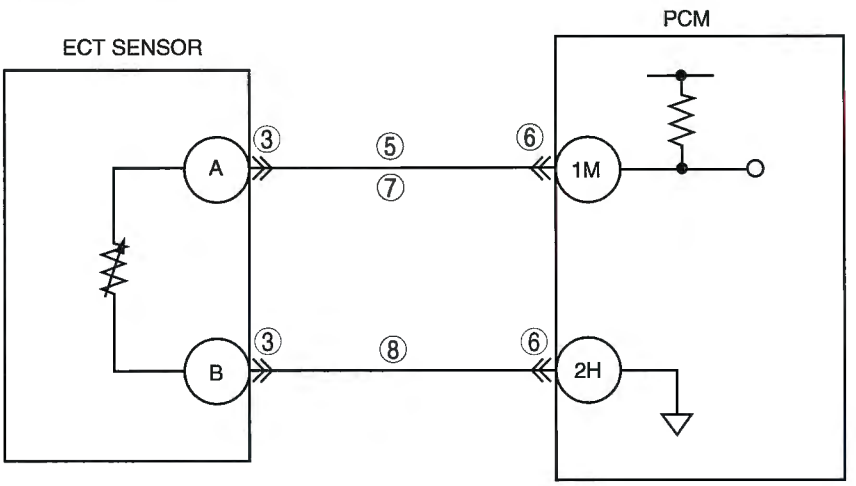

ECT SENSOR
WIRING HARNESS-SIDE CONNECTOR

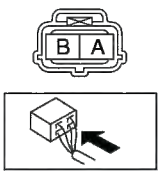

PCM
WIRING HARNESS-SIDE CONNECTOR

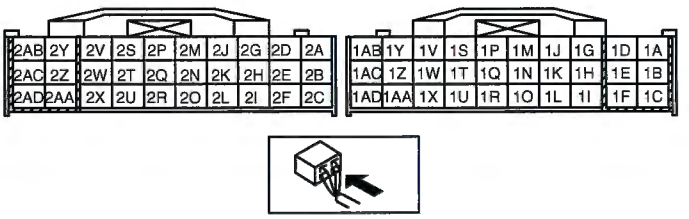

Diagnostic procedure

STEP	INSPECTION		ACTION
1	**VERIFY FREEZE FRAME DATA AND DIAGNOSTIC MONITORING TEST RESULTS HAVE BEEN RECORDED** • Have the FREEZE FRAME DATA and DIAGNOSTIC MONITORING TEST RESULTS (Engine cooling system related) been recorded?	Yes	Go to the next step.
		No	Record the FREEZE FRAME DATA and DIAGNOSTIC MONITORING TEST RESULTS on the repair order, then go to the next step.
2	**VERIFY RELATED REPAIR INFORMATION AVAILABILITY** • Verify related service Bulletins and/or on-line repair information availability. • Is any related repair information available?	Yes	Perform the repair or diagnosis according to the available repair information. • If the vehicle is not repaired, go to the next step.
		No	Go to the next step.
3	**INSPECT POOR CONNECTION OF ECT SENSOR CONNECTOR FOR POOR CONNECTION** • Turn the ignition switch off. • Disconnect ECT sensor connector. • Inspect for poor connection (such as damaged/ pulled-out pins, corrosion.) • Is there any malfunction?	Yes	Repair or replace the terminal, then go to Step 9.
		No	Go to the next step.
4	**CLASSIFY ECT SENSOR MALFUNCTION OR WIRING HARNESS MALFUNCTION** • Connect the WDS or equivalent to the DLC-2. • Access the ECT PID. • Connect a jumper wire between ECT sensor terminals A and B. • Verify the ECT value. • Is the voltage **4.6 V or below**?	Yes	Replace the ECT sensor, then go to Step 9.
		No	Go to the next step.
5	**INSPECT ECT SENSOR SIGNAL CIRCUIT FOR SHORT TO POWER** • Turn the ignition switch to the ON position (Engine off). • Measure the voltage between ECT sensor terminal A (wiring harness-side) and body ground. • Is the voltage **B+**?	Yes	Repair or replace the wiring harness for a short to power supply, then go to Step 9.
		No	Go to the next step.
6	**INSPECT PCM CONNECTOR FOR POOR CONNECTION** • Disconnect the PCM connector. • Inspect for poor connection (such as damaged/ pulled-out pins, corrosion.) • Is there any malfunction?	Yes	Repair or replace the terminal, then go to Step 9.
		No	Go to the next step.
7	**INSPECT ECT SENSOR SIGNAL CIRCUIT FOR OPEN CIRCUIT** • Inspect the continuity between ECT sensor terminal A (wiring harness-side) and PCM terminal 1M. • Is there continuity?	Yes	Go to the next step.
		No	Repair or replace the wiring harness for an open circuit, then go to Step 9.
8	**INSPECT ECT SENSOR GROUND CIRCUIT FOR OPEN CIRCUIT** • Inspect for continuity between ECT sensor terminal B (wiring harness-side) and PCM terminal 2H. • Is there continuity?	Yes	Go to the next step.
		No	Repair or replace the wiring harness for an open circuit, then go to the next step.
9	**VERIFY TROUBLESHOOTING OF DTC P0118 COMPLETED** • Make sure to reconnect all disconnected connectors. • Clear the DTC from the PCM memory using the WDS or equivalent. • Start the engine. • Is the same DTC present?	Yes	Replace the PCM, then go to the next step. (See 01–40B–6 PCM REMOVAL/INSTALLATION [L3 WITH TC].)
		No	Go to the next step.
10	**VERIFY AFTER REPAIR PROCEDURE** • Perform "AFTER REPAIR PROCEDURE". (See 01–02B–8 AFTER REPAIR PROCEDURE [L3 WITH TC].) • Are any DTCs present?	Yes	Go to the applicable DTC troubleshooting. (See 01–02B–14 DTC TABLE [L3 WITH TC].)
		No	Troubleshooting completed.

DTC P0122 [L3 WITH TC]

E6U010200100W44

DTC P0122	TP sensor No.1 circuit low input
DETECTION CONDITION	• If the PCM detects that the TP sensor No.1 voltage is **below 0.2 V** after the ignition switch is turned to the ON position, the PCM determines that TP circuit has a malfunction. **Diagnostic support note** • This is a continuous monitor (CCM). • MIL illuminates if the PCM detects the above malfunction condition during first drive cycle. • FREEZE FRAME DATA is available. • DTCs are stored in the PCM memory.
POSSIBLE CAUSE	• TP sensor malfunction • Connector or terminal malfunction • Short to ground between throttle body terminal A and PCM terminal 3M • Open circuit between throttle body terminal B and PCM terminal 3P

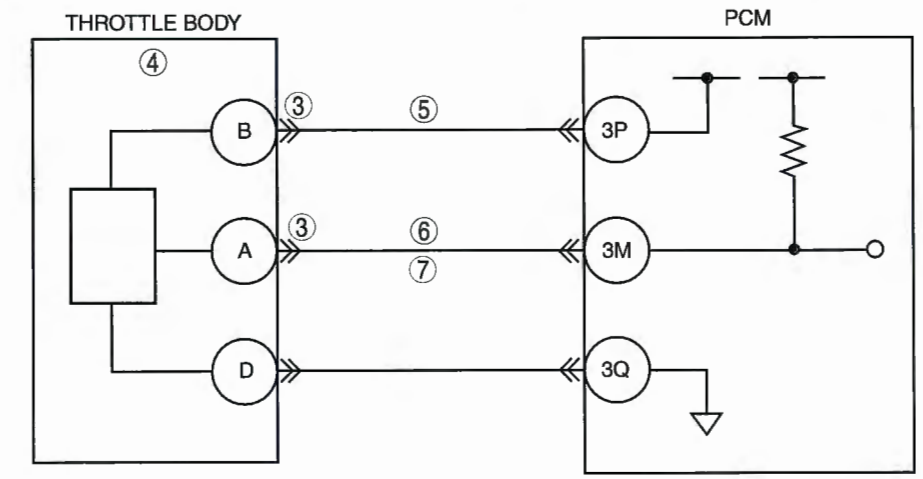

THROTTLE BODY
HARNESS SIDE CONNECTOR

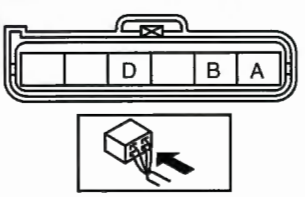

PCM
HARNESS SIDE CONNECTOR

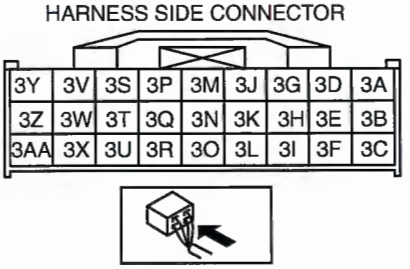

Diagnostic procedure

STEP	INSPECTION		ACTION
1	**VERIFY FREEZE FRAME DATA HAS BEEN RECORDED** • Has the FREEZE FRAME DATA been recorded?	Yes	Go to the next step.
		No	Record FREEZE FRAME DATA on the repair order, then go to the next step.
2	**VERIFY RELATED REPAIR INFORMATION AVAILABILITY** • Check for related Service Bulletins and/or on-line repair information availability. • Is any related repair information available?	Yes	Perform the repair or diagnosis according to the available repair information. • If the vehicle is not repaired, go to the next step.
		No	Go to the next step.
3	**CLASSIFY TP SENSOR OR HARNESS MALFUNCTION** • Connect the WDS or equivalent. • Access the TP1 PID. • Disconnect the throttle body connector. • Connect a jumper wire between throttle body terminals A and B (harness-side). • Is the voltage **above 4.9 V**?	Yes	Go to the next step.
		No	Go to step 5.
4	**INSPECT TP SENSOR** • Perform the TP sensor inspection. (See 01–40B–27 THROTTLE POSITION (TP) SENSOR INSPECTION [L3 WITH TC].) • Is the TP sensor normal?	Yes	Inspect for poor throttle body connector terminal B connection. Repair or replace if necessary, then go to Step 8.
		No	Replace throttle body, then go to Step 8.
5	**INSPECT POWER SUPPLY CIRCUIT VOLTAGE AT THROTTLE BODY CONNECTOR** **Note** • If DTC P0107 and P2228 are also retrieved with P0122, go to CONSTANT VOLTAGE troubleshooting procedure. • Turn ignition switch to the ON position (Engine off). • Measure the voltage at throttle body terminal B (harness-side). • Is the voltage **within 4.5—5.5 V**?	Yes	Go to the next step.
		No	Repair or replace for an open circuit between throttle body connector terminal B (harness-side) and PCM connector terminal 3N (harness-side). Then, then go to Step 8.
6	**VERIFY TP1 SIGNAL CIRCUIT FOR OPEN CIRCUIT** • Turn the ignition switch off. • Inspect for continuity between throttle body terminal A (harness-side) and PCM terminal 3M (harness-side). • Is there continuity?	Yes	Go to the next step.
		No	Repair or replace the suspected harness, then go to Step 8.
7	**VERIFY TP1 SIGNAL CIRCUIT FOR SHORT TO GROUND** • Inspect for continuity between throttle body terminal A (harness-side) and body ground. • Is there continuity?	Yes	Repair or replace the suspected wiring harness, then go to the next step.
		No	Go to the next step.
8	**VERIFY TROUBLESHOOTING OF DTC P0122 COMPLETED** • Make sure to reconnect all disconnected connectors. • Turn ignition switch to the ON position (Engine off). • Clear the DTC from the PCM memory using the WDS or equivalent. • Start the engine and warm it up completely. • Is same DTC present?	Yes	Replace PCM, then go to the next step. (See 01–40B–6 PCM REMOVAL/INSTALLATION [L3 WITH TC].)
		No	Go to the next step.
9	**VERIFY AFTER REPAIR PROCEDURE** • Perform the "After Repair Procedure". (See 01–02B–8 AFTER REPAIR PROCEDURE [L3 WITH TC].) • Are any DTCs present?	Yes	Go to the applicable DTC inspection. (See 01–02B–14 DTC TABLE [L3 WITH TC].)
		No	Troubleshooting completed.

DTC P0123 [L3 WITH TC]

E6U010200100W45

DTC P0123	TP sensor No.1 circuit high input
DETECTION CONDITION	• If the PCM detects that the TP sensor No.1 voltage is **above 4.9 V** after ignition switch to the ON position, PCM determines that TP circuit has a malfunction. **Diagnostic support note** • This is a continuous monitor (CCM). • MIL illuminates if the PCM detects the above malfunction condition during first drive cycle. • FREEZE FRAME DATA is available. • DTCs are stored in the PCM memory.
POSSIBLE CAUSE	• TP sensor malfunction • Connector or terminal malfunction • Open circuit between throttle body terminal B and PCM terminal 3P • Open circuit between throttle body terminal D and PCM terminal 3Q • Short to the constant voltage supply circuit between throttle body terminal A and PCM terminal 3M

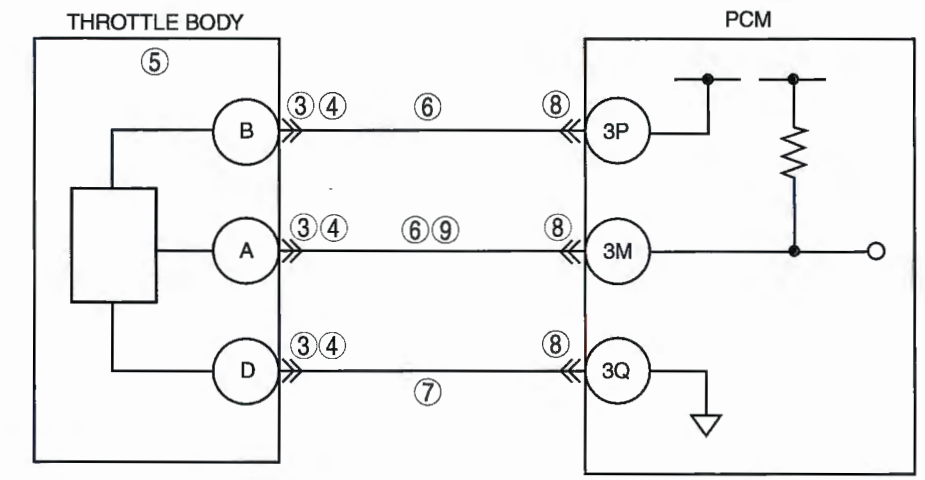

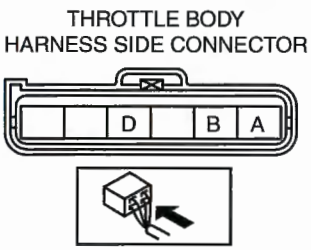

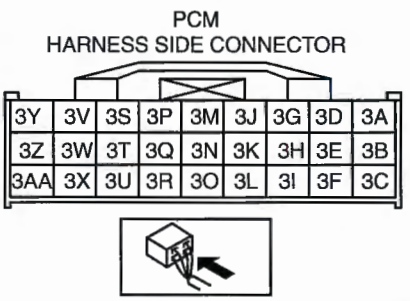

Diagnostic procedure

STEP	INSPECTION		ACTION
1	**VERIFY FREEZE FRAME DATA HAS BEEN RECORDED** • Has the FREEZE FRAME DATA been recorded?	Yes	Go to the next step.
		No	Record FREEZE FRAME DATA on the repair order, then go to the next step.
2	**VERIFY RELATED REPAIR INFORMATION AVAILABILITY** • Check for related Service Bulletins and/or on-line repair information availability. • Is any related repair information available?	Yes	Perform the repair or diagnosis according to the available repair information. • If the vehicle is not repaired, go to the next step.
		No	Go to the next step.
3	**INSPECT THROTTLE BODY CONNECTOR** • Turn the ignition switch off. • Verify that the throttle body connector is connected securely. • Is connector normal?	Yes	Go to the next step.
		No	Connect the connector securely, then go to Step 10.
4	**INSPECT THROTTLE BODY CONNECTION FOR POOR CONNECTION** • Disconnect throttle body connector. • Inspect for poor connection (such as damaged/pulled-out pins, corrosion). • Is there any malfunction?	Yes	Repair or replace the suspected wiring terminal, then go to Step 10.
		No	Go to the next step.
5	**INSPECT TP SENSOR** • Perform the TP sensor inspection. (See 01–40B–27 THROTTLE POSITION (TP) SENSOR INSPECTION [L3 WITH TC]) • Is the TP sensor normal?	Yes	Go to the next step.
		No	Replace the throttle body, then go to Step 10.
6	**INSPECT TP1 SIGNAL CIRCUIT FOR SHORT TO POWER SUPPLY** • Turn ignition switch to the ON position (Engine off). • Measure the voltage between throttle body terminal A (harness-side) and body ground. • Is the voltage **above 4.9 V**?	Yes	Repair or replace for short to a power supply. Then, go to Step 10.
		No	Go to the next step.
7	**VERIFY TP SENSOR GROUND CIRCUIT FOR OPEN CIRCUIT** • Inspect for continuity between throttle body connector terminal B (harness-side) and PCM connector terminal 3P. • Is there continuity?	Yes	Go to the next step.
		No	Repair or replace for an open circuit between TP sensor connector terminal B (harness-side) and PCM connector terminal 3P (harness-side). Then, go to Step 10.
8	**INSPECT PCM CONNECTOR FOR POOR CONNECTION** • Disconnect the PCM connector. • Inspect for poor connection (such as damaged/pulled-out pins, corrosion). • Is there any malfunction?	Yes	Repair terminal, then go to Step 10.
		No	Go to Step 10.
9	**VERIFY TP SIGNAL CIRCUIT FOR SHORT TO CONSTANT VOLTAGE CIRCUIT** • Inspect for continuity between throttle body terminals A and B (harness-side). • Is there continuity?	Yes	Repair or replace the suspected wiring harness, then go to the next step.
		No	Go to the next step.
10	**VERIFY TROUBLESHOOTING OF DTC P0123 COMPLETED** • Make sure to reconnect all disconnected connectors. • Turn ignition switch to the ON position (Engine off). • Clear the DTC from the PCM memory using the WDS or equivalent. • Start the engine and warm it up completely. • Is same DTC present?	Yes	Replace PCM, then go to the next step. (See 01–40B–6 PCM REMOVAL/INSTALLATION [L3 WITH TC].)
		No	Go to the next step.
11	**VERIFY AFTER REPAIR PROCEDURE** • Perform the "After Repair Procedure". (See 01–02B–8 AFTER REPAIR PROCEDURE [L3 WITH TC].) • Are any DTCs present?	Yes	Go to the applicable DTC inspection. (See 01–02B–14 DTC TABLE [L3 WITH TC].)
		No	Troubleshooting completed.

DTC P0125 [L3 WITH TC]

E6U010200100W46

DTC P0125	Excessive time to enter closed loop fuel control
DETECTION CONDITION	• The PCM monitors the ECT sensor signal after the engine is started while the engine is cold. If the engine coolant temperature does not reach the expected temperature for a specified period, the PCM determines that it has taken an excessive amount of time for the engine coolant temperature to reach the temperature necessary to start closed-loop fuel control. **Diagnostic support note** • This is a continuous monitor (Engine cooling system). • MIL illuminates if the PCM detects the above malfunction condition in two consecutive drive cycles or in one drive cycle while the DTC for the same malfunction has been stored in the PCM. • PENDING CODE is available if the PCM detects the above malfunction condition during first drive cycle. • FREEZE FRAME DATA is available. • DTCs are stored in the PCM memory.
POSSIBLE CAUSE	• ECT sensor malfunction • Cooling system malfunction • Poor connection of connectors • PCM malfunction

Diagnostic procedure

STEP	INSPECTION		ACTION
1	**VERIFY FREEZE FRAME DATA AND DIAGNOSTIC MONITORING TEST RESULTS HAVE BEEN RECORDED** • Have the FREEZE FRAME DATA and DIAGNOSTIC MONITORING TEST RESULTS (Engine cooling system related) been recorded?	Yes	Go to the next step.
		No	Record FREEZE FRAME DATA and DIAGNOSTIC MONITORING TEST RESULTS on the repair order, then go to the next step.
2	**VERIFY RELATED SERVICE INFORMATION AVAILABILITY** • Verify related Service Information availability. • Is any related Service Information available?	Yes	Perform the repair or diagnosis according to available Service Information. • If the vehicle is not repaired, go to the next step.
		No	Go to the next step.
3	**VERIFY CURRENT INPUT SIGNAL STATUS: IS CONCERN INTERMITTENT OR CONSTANT** • Start the engine. • Warm up the engine completely. • Access the ECT PID using the WDS or equivalent. • Is the ECT PID **above 60 °C {140 °F}**?	Yes	Intermittent concern exists. Go to the INTERMITTENT CONCERNS TROUBLESHOOTING procedure. (See 01–03B–6 INTERMITTENT CONCERN TROUBLESHOOTING [L3 WITH TC].)
		No	Go to the next step.
4	**INSPECT ECT SENSOR CONNECTOR FOR POOR CONNECTION** • Turn the ignition switch off. • Disconnect the ECT sensor connector. • Inspect for poor connection (such as damaged/ pulled-out pins, corrosion.) • Is there any malfunction?	Yes	Repair or replace the terminal, then go to Step 7.
		No	Go to the next step.
5	**INSPECT ECT SENSOR** • Inspect the ECT sensor. (See 01–40B–30 ENGINE COOLANT TEMPERATURE (ECT) SENSOR INSPECTION [L3 WITH TC].) • Is it normal?	Yes	Go to the next step.
		No	Replace the ECT sensor, then go to Step 7.
6	**INSPECT PCM CONNECTOR FOR POOR CONNECTION** • Disconnect the PCM connector. • Inspect for poor connection (such as damaged/ pulled-out pins, corrosion.) • Is there any malfunction?	Yes	Repair or replace the terminal, then go to the next step.
		No	Go to the next step.
7	**VERIFY TROUBLESHOOTING OF DTC P0125 COMPLETED** • Make sure to reconnect all disconnected connectors. • Clear the DTC from the PCM memory using the WDS or equivalent. • Turn the ignition switch to the ON position (Engine off). • Access the ECT PID using the WDS or equivalent. • Wait until ECT PID **below 8 °C {46 °F}**. • Start the engine and warm it up completely. • Is the PENDING CODE for this DTC present?	Yes	Replace the PCM, then go to the next step. (See 01–40B–6 PCM REMOVAL/INSTALLATION [L3 WITH TC].)
		No	Go to the next step.
8	**VERIFY AFTER REPAIR PROCEDURE** • Perform the "AFTER REPAIR PROCEDURE". (See 01–02B–8 AFTER REPAIR PROCEDURE [L3 WITH TC].) • Are any DTCs present?	Yes	Go to the applicable DTC troubleshooting. (See 01–02B–14 DTC TABLE [L3 WITH TC].)
		No	Troubleshooting completed.

DTC P0126, P0128 [L3 WITH TC]

E6U010200100W47

DTC P0126 DTC P0128	**Coolant thermostat stuck open**
DETECTION CONDITION	**DTC P0126** • If the ECT signal never exceeds **71 °C {160 °F}** after engine is started for a specified period, the PCM determines that the coolant thermostat is stuck open. **MONITORING CONDITIONS** — IAT: **above –10 °C {14 °F}** — Vehicle speed: **over 6.0 km/h {3.7 mph}** **DTC P0128** • PCM monitors MAF, IAT, VSS and ECT signals and calculate radiator's heat the radiation ratio when the following monitoring conditions are met. If the calculated value exceeds the threshold, the PCM determines that the coolant thermostat is stuck open. **MONITORING CONDITIONS** — IAT: **above –10°C {14 °F}** — ECT at engine start: **Below 36 °C {97 °F}** — Difference between ECT at engine start and minimum IAT: **Below 6 °C {10.8 °F}** — Vehicle speed: **over 30 km/h {18.6 mph}** **Diagnostic support note** • This is an intermittent monitor (Engine cooling system). • MIL illuminates if PCM detects above malfunction condition in two consecutive drive cycles or in one drive cycle while the DTC for the same malfunction has been stored in the PCM. • PENDING CODE is available if PCM detects the above malfunction condition during first drive cycle. • FREEZE FRAME DATA is available. • DTC is stored in PCM memory. • DIAGNOSTIC MONITORING TEST RESULT is available.
POSSIBLE CAUSE	• ECT sensor malfunction • Coolant thermostat malfunction • PCM malfunction

Diagnostic procedure

STEP	INSPECTION		ACTION
1	**VERIFY FREEZE FRAME DATA AND DIAGNOSTIC MONITORING TEST RESULTS HAVE BEEN RECORDED** • Have the FREEZE FRAME DATA and DIAGNOSTIC MONITORING TEST RESULTS (Engine cooling system related) been recorded?	Yes	Go to the next step.
		No	Record FREEZE FRAME DATA and DIAGNOSTIC MONITORING TEST RESULTS on the repair order, then go to the next step.
2	**VERIFY RELATED REPAIR INFORMATION AVAILABILITY** • Check for related Service Bulletins and/or on-line repair information availability. • Is any related repair information available?	Yes	Perform the repair or diagnosis according to the available repair information. • If the vehicle is not repaired, go to the next step.
		No	Go to the next step.
3	**INSPECT FOR OTHER DTCS** • Have other DTCs been stored?	Yes	Repair the circuit malfunction for applicable DTCs.
		No	Go to the next step.
4	**INSPECT IF COOLANT THERMOSTAT IS STUCK OPEN** • Perform the coolant thermostat inspection. (See 01–12B–7 THERMOSTAT INSPECTION [L3 WITH TC].) • Is the coolant thermostat normal?	Yes	Inspect the ECT sensor. Replace the ECT sensor if necessary, then go to the next step.
		No	Replace the coolant thermostat, then go to the next step.
5	**VERIFY MONITORING CONDITION FOR REPAIR VERIFICATION** • Make sure to reconnect all disconnected connectors. • Cool down the engine. **Note** • If the temperature difference between the inside and outside of the workshop, the PCM might not operate the thermostat monitor. Therefore, it is recommended to cool down the engine outside of the workshop. • Turn the ignition switch to the ON position (Engine off). • Clear the DTC from the PCM memory using the WDS or equivalent. • Access the ECT, IAT PIDs and make sure that each value is within the following specifications. — ECT: **below 36 °C {97 °F}** (for P0128 only) — Difference between the ECT and IAT: **Below 6 °C {43°F}** • Is there any PID that is out of specification?	Yes	Take corrective action (e.g. cool down engine), then repeat this step.
		No	Go to the next step for DTC P0126 or go to Step 7 for DTC P0128.

STEP	INSPECTION		ACTION
6	**VERIFY TROUBLESHOOTING OF DTC P0126 COMPLETED** • Start the engine and turn off the E/L and A/C. • Access the DIAGNOSTIC MONITORING TEST RESULTS using the WDS or equivalent and monitor TEST #10: E1: 81 (ECT). **Note** • This test requires actual driving. A chassis roller cannot be used for this test. • During the test drive, constant speed should be maintained, although 2 or 3 stops during every **5 minutes** of driving time (e.g. for traffic signals) is acceptable. Stop-and-go (e.g. in case of traffic congestion) is not acceptable during the test period. • Test period depends on ECT at engine start. (e.g. if ECT is **–10 °C {14 °F}**, monitoring period is **20 minutes** and if ECT is **30 °C {86 °F}**, monitoring period is **8 minutes**) • Verify TEST #10: E1: 81 (ECT) value. • Is the value above the minimum value?	Yes	Go to Step 8.
		No	Replace PCM, then go to Step 8. (See 01–40B–6 PCM REMOVAL/INSTALLATION [L3 WITH TC].)
7	**VERIFY TROUBLESHOOTING OF DTC P0128 COMPLETED** • Start the engine and turn off the E/L and A/C. • Access DIAGNOSTIC MONITORING TEST RESULTS using the WDS or equivalent and monitor TEST #10: E1: 80 (Heat radiation ratio) or #10: E1: 81 (ECT). **Note** • This test requires actual driving. A chassis roller cannot be used for this test. • During the test drive, constant speed should be maintained, although 2 or 3 stops (e.g. for traffic signals) is acceptable. Stop-and-go (e.g. in case of traffic congestion) is not acceptable during the test period. • Verify TEST #10: E1: 80 (Heat radiation ratio) and #10: E1: 81 (ECT) value. • Is value of TEST #10: E1: 80 (Heat radiation ratio) below the maximum the value and value of TEST #10: E1: 81 (ECT) above the minimum value?	Yes	Go to the next step.
		No	Replace the PCM, then go to the next step. (See 01–40B–6 PCM REMOVAL/INSTALLATION [L3 WITH TC].)
8	**VERIFY AFTER REPAIR PROCEDURE** • Perform "AFTER REPAIR PROCEDURE". (See 01–02B–8 AFTER REPAIR PROCEDURE [L3 WITH TC].) • Are any DTCs present?	Yes	Go to the applicable DTC inspection. (See 01–02B–14 DTC TABLE [L3 WITH TC].)
		No	Troubleshooting completed.

DTC P0131 [L3 WITH TC]

E6U010200100W48

DTC P0131	Front HO2S circuit low input
DETECTION CONDITION	• The PCM monitors the input voltage from the front HO2S when the engine is running. If the input voltage is **above 1.0 V** for **25 s**, the PCM determines that the front HO2S circuit voltage is low. **Diagnostic support note** • This is a continuance monitor (HO2S). • The MIL illuminates if the PCM detects the above malfunction condition in two consecutive drive cycles or in one drive cycle while the DTC for the same malfunction has been stored in the PCM. • PENDING CODE is available if the PCM detects the above malfunction condition during the first drive cycle. • FREEZE FRAME DATA is available. • DTCs are stored in the PCM memory.
POSSIBLE CAUSE	• Front HO2S malfunction • Connector or terminal malfunction • Open circuit in the wiring harness between front HO2S terminal 1C and PCM terminal 2J • Short to ground in the wiring harness between front HO2S terminal 1C and PCM terminal 2J • Open circuit in the wiring harness between front HO2S terminal 1B and PCM terminal 2G • Short to ground in the wiring harness between front HO2S terminal 1B and PCM terminal 2G • Short to ground in the wiring harness between front HO2S terminal 1A and PCM terminal 2D • PCM malfunction

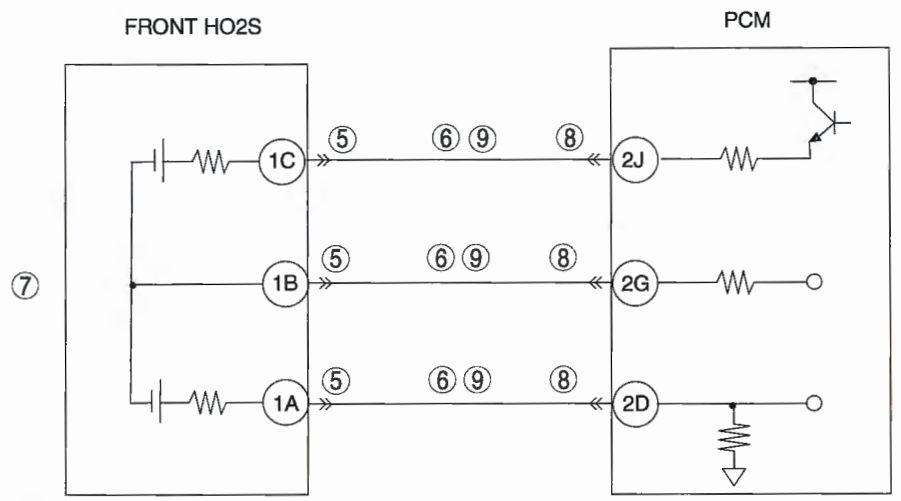

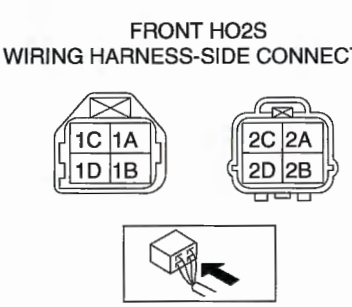

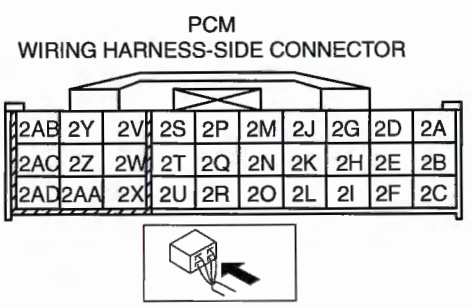

Diagnostic procedure

STEP	INSPECTION		ACTION
1	**VERIFY FREEZE FRAME DATA AND DIAGNOSTIC MONITORING TEST RESULTS HAVE BEEN RECORDED** • Have the FREEZE FRAME DATA and DIAGNOSTIC MONITORING TEST RESULTS (HO2S related) been recorded?	Yes	Go to the next step.
		No	Record the FREEZE FRAME DATA and DIAGNOSTIC MONITORING TEST RESULTS on the repair order, then go to the next step.
2	**VERIFY RELATED REPAIR INFORMATION AVAILABILITY** • Verify related Service Bulletins and/or on-line repair information availability. • Is any related repair information available?	Yes	Perform the repair or diagnosis according to the available repair information. • If the vehicle is not repaired, go to the next step.
		No	Go to the next step.

STEP	INSPECTION		ACTION
3	**VERIFY RELATED PENDING OR STORED DTC** • Turn the ignition switch off, then to the ON position (Engine off). • Verify the pending code or stored DTCs using the WDS or equivalent. • Are other DTCs present?	Yes	Go to the appropriate DTC troubleshooting procedures. (See 01–02B–14 DTC TABLE [L3 WITH TC].)
		No	Go to the next step.
4	**IDENTIFY TRIGGER DTC FOR FREEZE FRAME DATA** • Is DTC P0131 on FREEZE FRAME DATA?	Yes	Go to the next step.
		No	Go to troubleshooting procedures for the DTC on the FREEZE FRAME DATA. (See 01–02B–14 DTC TABLE [L3 WITH TC].)
5	**INSPECT FRONT HO2S CONNECTOR FOR POOR CONNECTION** • Turn the ignition switch off. • Disconnect the front HO2S connector. • Inspect for poor connection (such as damaged/ pulled-out pins, corrosion). • Is there any malfunction?	Yes	Repair or replace the terminal, then go to Step 10.
		No	Go to the next step.
6	**INSPECT FRONT HO2S CIRCUIT FOR SHORT TO GROUND** • Turn the ignition switch off. • Inspect for continuity between the following terminals and body ground: — Front HO2S terminal 1A (wiring harness-side) and body ground — Front HO2S terminal 1B (wiring harness-side) and body ground — Front HO2S terminal 1C (wiring harness-side) and body ground • Is there continuity?	Yes	Repair or replace the wiring harness for a possible short to ground, then go to Step 10.
		No	Go to the next step.
7	**INSPECT FRONT HO2S** • Inspect the front HO2S. (See 01–40B–42 HEATED OXYGEN SENSOR (HO2S) INSPECTION [L3 WITH TC].) • Is there any malfunction?	Yes	Replace the front HO2S, then go to Step 10. (See 01–15B–3 HO2S Removal Note.)
		No	Go to the next step.
8	**INSPECT PCM CONNECTOR FOR POOR CONNECTION** • Turn the ignition switch off. • Disconnect the PCM connector. • Inspect for poor connection (such as damaged/ pulled-out pins, corrosion). • Is there any malfunction?	Yes	Repair or replace the terminal, then go to Step 10.
		No	Go to the next step.
9	**INSPECT FRONT HO2S CIRCUIT FOR OPEN CIRCUIT** • Turn the ignition switch off. • Inspect for continuity between the following circuits: — Front HO2S terminal 1B (wiring harness-side) and PCM terminal 2G (wiring harness-side) — Front HO2S terminal 1C (wiring harness-side) and PCM terminal 2J (wiring harness-side) • Is there continuity?	Yes	Go to the next step.
		No	Repair or replace the wiring harness for a possible open circuit, then go to the next step.
10	**VERIFY TROUBLESHOOTING OF DTC P0131 COMPLETED** • Make sure to reconnect all disconnected connectors. • Clear the DTC from the PCM memory using the WDS or equivalent. • Perform HO2S heater, HO2S, and TWC Repair Verification Drive Mode. (See 01–02B–9 OBD-II DRIVE MODE [L3 WITH TC].) • Is the PENDING CODE for this DTC present?	Yes	Replace the PCM, then go to the next step. (See 01–40B–6 PCM REMOVAL/INSTALLATION [L3 WITH TC].)
		No	Go to the next step.
11	**VERIFY AFTER REPAIR PROCEDURE** • Perform the "AFTER REPAIR PROCEDURE". (See 01–02B–8 AFTER REPAIR PROCEDURE [L3 WITH TC].) • Are any DTCs present?	Yes	Go to the applicable DTC inspection. (See 01–02B–14 DTC TABLE [L3 WITH TC].)
		No	DTC troubleshooting completed.

DTC P0132 [L3 WITH TC]

E6U010200100W49

DTC P0132	Front HO2S circuit high input
DETECTION CONDITION	• The PCM monitors the input voltage from the front HO2S when the engine is running. If the input voltage i **less than 1.0 V** for **2 s**, the PCM determines that the front HO2S circuit voltage is high. **Diagnostic support note** • This is a continuance monitor (HO2S). • The MIL illuminates if the PCM detects the above malfunction condition in two consecutive drive cycles or in one drive cycle while the DTC for the same malfunction has been stored in the PCM. • PENDING CODE is available if the PCM detects the above malfunction condition during the first drive cycle. • FREEZE FRAME DATA is available. • The DTC is stored in the PCM memory.
POSSIBLE CAUSE	• Front HO2S malfunction • Connector or terminal malfunction • Short to the power supply in the wiring harness between front HO2S terminal 1C and PCM terminal 2J • Short to the power supply in the wiring harness between front HO2S terminal 1B and PCM terminal 2G • Short to the power supply in the wiring harness between front HO2S terminal 1A and PCM terminal 2D • PCM malfunction

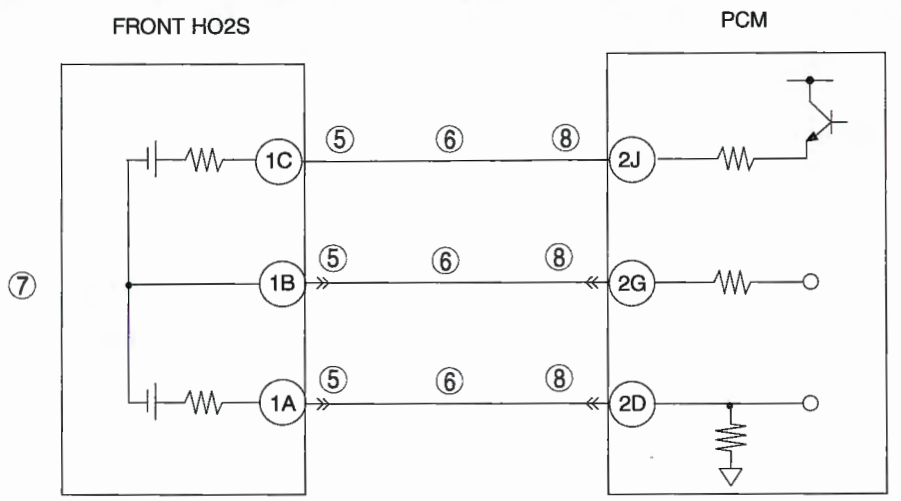

FRONT HO2S
WIRING HARNESS-SIDE CONNECTOR

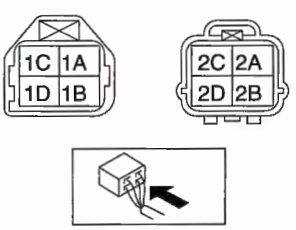

PCM
WIRING HARNESS-SIDE CONNECTOR

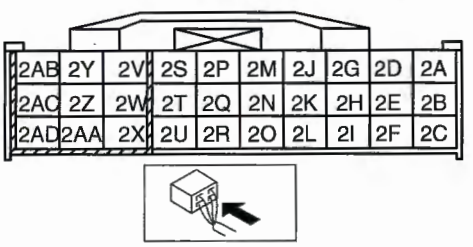

Diagnostic procedure

STEP	INSPECTION		ACTION
1	**VERIFY FREEZE FRAME DATA AND DIAGNOSTIC MONITORING TEST RESULTS HAVE BEEN RECORDED** • Have the FREEZE FRAME DATA and DIAGNOSTIC MONITORING TEST RESULTS (HO2S related) been recorded?	Yes	Go to the next step.
		No	Record the FREEZE FRAME DATA and DIAGNOSTIC MONITORING TEST RESULTS on the repair order, then go to the next step.
2	**VERIFY RELATED REPAIR INFORMATION AVAILABILITY** • Verify related Service Bulletins and/or on-line repair information availability. • Is any related repair information available?	Yes	Perform the repair or diagnosis according to the available repair information. • If the vehicle is not repaired, go to the next step.
		No	Go to the next step.

STEP	INSPECTION		ACTION
3	**VERIFY RELATED PENDING OR STORED DTC** • Turn the ignition switch off, then to the ON position (Engine off). • Verify the pending code or stored DTCs using the WDS or equivalent. • Are other DTCs present?	Yes	Go to the appropriate DTC troubleshooting procedures. (See 01–02B–14 DTC TABLE [L3 WITH TC].)
		No	Go to the next step.
4	**IDENTIFY TRIGGER DTC FOR FREEZE FRAME DATA** • Is DTC P0132 on FREEZE FRAME DATA?	Yes	Go to the next step.
		No	Go to troubleshooting procedures for the DTC on the FREEZE FRAME DATA. (See 01–02B–14 DTC TABLE [L3 WITH TC].)
5	**INSPECT FRONT HO2S CONNECTOR FOR POOR CONNECTION** • Turn the ignition switch off. • Disconnect the front HO2S connector. • Inspect for poor connection (such as damaged/ pulled-out pins, corrosion). • Is there any malfunction?	Yes	Repair or replace the terminal, then go to Step 9.
		No	Go to the next step.
6	**INSPECT FRONT HO2S CIRCUIT FOR SHORT TO POWER SUPPLY** • Turn the ignition switch to the ON position (Engine off). • Measure the voltage between the following terminals and body ground: — Front HO2S terminal 1A (wiring harness-side) and body ground — Front HO2S terminal 1B (wiring harness-side) and body ground — Front HO2S terminal 1C (wiring harness-side) and body ground • Is the voltage **B+**?	Yes	Repair or replace the wiring harness for a possible short to the power supply, then go to Step 9.
		No	Go to the next step.
7	**INSPECT FRONT HO2S** • Inspect the front HO2S. (See 01–40B–42 HEATED OXYGEN SENSOR (HO2S) INSPECTION [L3 WITH TC].) • Is there any malfunction?	Yes	Replace the front HO2S, then go to Step 9. (See 01–15B–3 HO2S Removal Note.)
		No	Go to the next step.
8	**INSPECT PCM CONNECTOR FOR POOR CONNECTION** • Turn the ignition switch off. • Disconnect the PCM connector. • Inspect for poor connection (such as damaged/ pulled-out pins, corrosion). • Is there any malfunction?	Yes	Repair or replace the terminal, then go to the next step.
		No	Go to the next step.
9	**VERIFY TROUBLESHOOTING OF DTC P0132 COMPLETED** • Make sure to reconnect all disconnected connectors. • Clear the DTC from the PCM memory using the WDS or equivalent. • Perform the HO2S heater, HO2S, and TWC Repair Verification Drive Mode. (See 01–02B–9 OBD-II DRIVE MODE [L3 WITH TC].) • Is the PENDING CODE for this DTC present?	Yes	Replace the PCM, then go to the next step. (See 01–40B–6 PCM REMOVAL/INSTALLATION [L3 WITH TC].)
		No	Go to the next step.
10	**VERIFY AFTER REPAIR PROCEDURE** • Perform the "AFTER REPAIR PROCEDURE". (See 01–02B–8 AFTER REPAIR PROCEDURE [L3 WITH TC].) • Are any DTCs present?	Yes	Go to the applicable DTC inspection. (See 01–02B–14 DTC TABLE [L3 WITH TC].)
		No	DTC troubleshooting completed.

DTC P0133 [L3 WITH TC]

E6U010200100W50

DTC P0133	Front HO2S circuit slow response
DETECTION CONDITION	• An oxygen sensor malfunction can be detected by measuring the average frequency of the oxygen sensor signal, time required to pass from rich to lean, and the time required to pass from lean to rich. • The average frequency of the oxygen sensor signal is more than the threshold value. **MONITORING CONDITIONS** — HO2S heater, HO2S, and TWC Repair Verification Drive Mode — The following conditions are met: • Front HO2S heater monitor is completed. • ECT sensor and front HO2S heater are normal • Engine speed: **1,750—3,500 rpm**. • Charging efficiency: **35—63%** (at engine speed of **2500 rpm**) • Fuel system loop status is closed loop fuel control. • Engine coolant temperature **above 70 °C {158 °F}** **Diagnostic support note** • This is an intermittent monitor. (HO2S) • The MIL illuminates if the PCM detects the above malfunction condition in two consecutive drive cycles or in one drive cycle while the DTC for the same malfunction has been stored in the PCM. • DIAGNOSTIC MONITORING TEST RESULTS is available. • PENDING CODE is available if the PCM detects the above malfunction condition during first drive cycle. • FREEZE FRAME DATA is available. • DTCs are stored in the PCM memory.
POSSIBLE CAUSE	• Front HO2S deterioration • Front HO2S malfunction • Front HO2S looseness • Fuel pressure sensor malfunction • Clogged or restricted fuel line • Fuel leakage in the fuel line between the fuel delivery pipe and the fuel pump • Exhaust system leakage • Purge solenoid valve malfunction • Improper connection purge solenoid hose • Insufficient compression • Engine malfunction (Engine coolant leakage)

Diagnostic procedure

STEP	INSPECTION		ACTION
1	**VERIFY FREEZE FRAME DATA AND DIAGNOSTIC MONITORING TEST RESULTS HAVE BEEN RECORDED** • Have the FREEZE FRAME DATA and DIAGNOSTIC MONITORING TEST RESULTS (HO2S related) been recorded?	Yes	Go to the next step.
		No	Record the FREEZE FRAME DATA and DIAGNOSTIC MONITORING TEST RESULTS on the repair order, then go to the next step.
2	**VERIFY RELATED REPAIR INFORMATION AVAILABILITY** • Verify related Service Bulletins and/or on-line repair information availability. • Is any related repair information available?	Yes	Perform the repair or diagnosis according to the available repair information. • If the vehicle is not repaired, go to the next step.
		No	Go to the next step.
3	**VERIFY RELATED PENDING AND STORED DTC** • Turn the ignition switch off, then to the ON position (Engine off). • Verify the pending or stored DTCs using the WDS or equivalent. • Is DTC P0443 also present?	Yes	Go to DTC P0443 troubleshooting procedures, then go to Step 14.
		No	Go to the next step.
4	**IDENTIFY TRIGGER DTC FOR FREEZE FRAME DATA** • Is DTC P0133 on FREEZE FRAME DATA?	Yes	Go to the next step.
		No	Go to troubleshooting procedures for DTC on FREEZE FRAME DATA. (See 01–02B–14 DTC TABLE [L3 WITH TC].)
5	**VERIFY CURRENT INPUT SIGNAL STATUS** • Warm up the engine. • Access the O2S11 PID using the WDS or equivalent. • Inspect the PID under the following accelerator pedal conditions in NEUTRAL. • Is the PID normal? — Less than 1mA when the accelerator pedal is suddenly depressed (rich condition). — More than 1mA just after accelerator pedal is released (lean condition).	Yes	Go to Step 8.
		No	Go to the next step.

STEP	INSPECTION		ACTION
6	**INSPECT INSTALLATION OF FRONT HO2S** • Inspect if the front HO2S is loosely installed. • Is the front HO2S installed securely?	Yes	Go to the next step.
		No	Retighten the front HO2S, then go to Step 14.
7	**INSPECT GAS LEAKAGE FROM EXHAUST SYSTEM** • Visually inspect if any gas leakage is found between the exhaust manifold and front HO2S. • Is there gas leakage?	Yes	Repair or replace the malfunctioning exhaust part, then go to Step 14.
		No	Replace sensor, then go to Step 14.
8	**INSPECT FUEL PRESSURE (HIGH-SIDE)** • Access and monitor the FUEL PRES PID. • Is the FUEL PRES PID value within the specification? (See 01–40B–6 Using the WDS or Equivalent.)	Yes	Go to Step 13.
		No	Go to the next step.
9	**IDENTIFY CAUSE BY FUEL PRESSURE SENSOR OR HIGH PRESSURE FUEL PUMP** • Is the vehicle accelerate performance normally?	Yes	Go to the next step.
		No	Go to Step 11.
10	**INSPECT FUEL PRESSURE SENSOR** • Inspect the fuel pressure sensor. (See 01–40B–34 FUEL PRESSURE SENSOR INSPECTION [L3 WITH TC].) • Is the fuel pressure sensor normal?	Yes	Go to the next step.
		No	Replace the fuel delivery pipe, then go to Step 14.
11	**INSPECT HIGH PRESSURE FUEL PUMP** • Replace the high pressure fuel pump. • Monitor FUEL_PRES PID. • Is the FUEL_PRES PID value within the specified? (See 01–40B–6 Using the WDS or Equivalent.)	Yes	Retest Step 14.
		No	Go to the next step.
12	**INSPECT FUEL PRESSURE (LOW-SIDE)** • Connect the fuel pressure gauge between fuel pump and high pressure fuel pump. • Measure the low side fuel pressure. (See01–14B–5 FUEL LINE PRESSURE INSPECTION [L3 WITH TC].) • Is the low side fuel pressure within the specification?	Yes	Go to the next step.
		No	Inspect for the following: • Fuel line restriction • Fuel filter clogging If normal replace the fuel pump. Then go to Step 14.
13	**INSPECT SEALING OF ENGINE COOLANT PASSAGE** • Perform the "ENGINE COOLANT LEAKAGE INSPECTION". (See 01–12B–5 ENGINE COOLANT LEAKAGE INSPECTION [L3 WITH TC].) • Is there any malfunction?	Yes	Go to the next step.
		No	Repair or replace the malfunctioning part according to the inspection results. Then go to the next step.
14	**VERIFY TROUBLESHOOTING OF DTC P0133 COMPLETED** • Make sure to reconnect all disconnected connectors. • Turn the ignition switch to the ON position. (Engine off) • Clear the DTC from the memory using the WDS or equivalent. • Perform the HO2S heater, HO2S, and TWC Repair Verification Drive Mode. (See 01–02B–9 OBD-II DRIVE MODE [L3 WITH TC].) • Is the PENDING CODE for this DTC present?	Yes	Replace the PCM, then go to the next step. (See 01–40B–6 PCM REMOVAL/INSTALLATION [L3 WITH TC].)
		No	Go to the next step.
15	**VERIFY AFTER REPAIR PROCEDURE** • Perform the "AFTER REPAIR PROCEDURE". (See 01–02B–8 AFTER REPAIR PROCEDURE [L3 WITH TC].) • Are any DTCs present?	Yes	Go to the applicable DTC troubleshooting. (See 01–02B–14 DTC TABLE [L3 WITH TC].)
		No	Troubleshooting completed.

DTC P0134 [L3 WITH TC]

E6U010200100W51

DTC P0134	Front HO2S no activity detected
DETECTION CONDITION	• The PCM monitors the input voltage from the HO2S when the following conditions are met. If under the following monitoring conditions, the input voltage **more than 3.22 V**, the PCM determines that the front HO2S is not activated. **MONITORING CONDITIONS** — HO2S, HO2S heater and TWC Repair Verification Drive Mode — The following conditions are met • Front HO2S heater is tuned on for **above 30 s** • Battery voltage: **10—18 V** **Diagnostic support note** • This is an intermittent monitor (HO2S). • The MIL illuminates if the PCM detects the above malfunction condition in two consecutive drive cycles or in one drive cycle while the DTC for the same malfunction has been stored in the PCM. • PENDING CODE is available if the PCM detects the above malfunction condition during first drive cycle. • FREEZE FRAME DATA is available. • DTCs are stored in the PCM memory.
POSSIBLE CAUSE	• Front HO2S deterioration • Front HO2S heater malfunction • Leakage exhaust system • Open or short circuit in the wiring harness between front HO2S terminal 2D and PCM terminal 4AD • Open or short circuit in the wiring harness between front HO2S terminal 1C and PCM terminal 2J • Open or short circuit in the wiring harness between front HO2S terminal 1B and PCM terminal 2G • Open or short circuit in the wiring harness between front HO2S terminal 1A and PCM terminal 2D • Insufficient compression • Engine malfunction

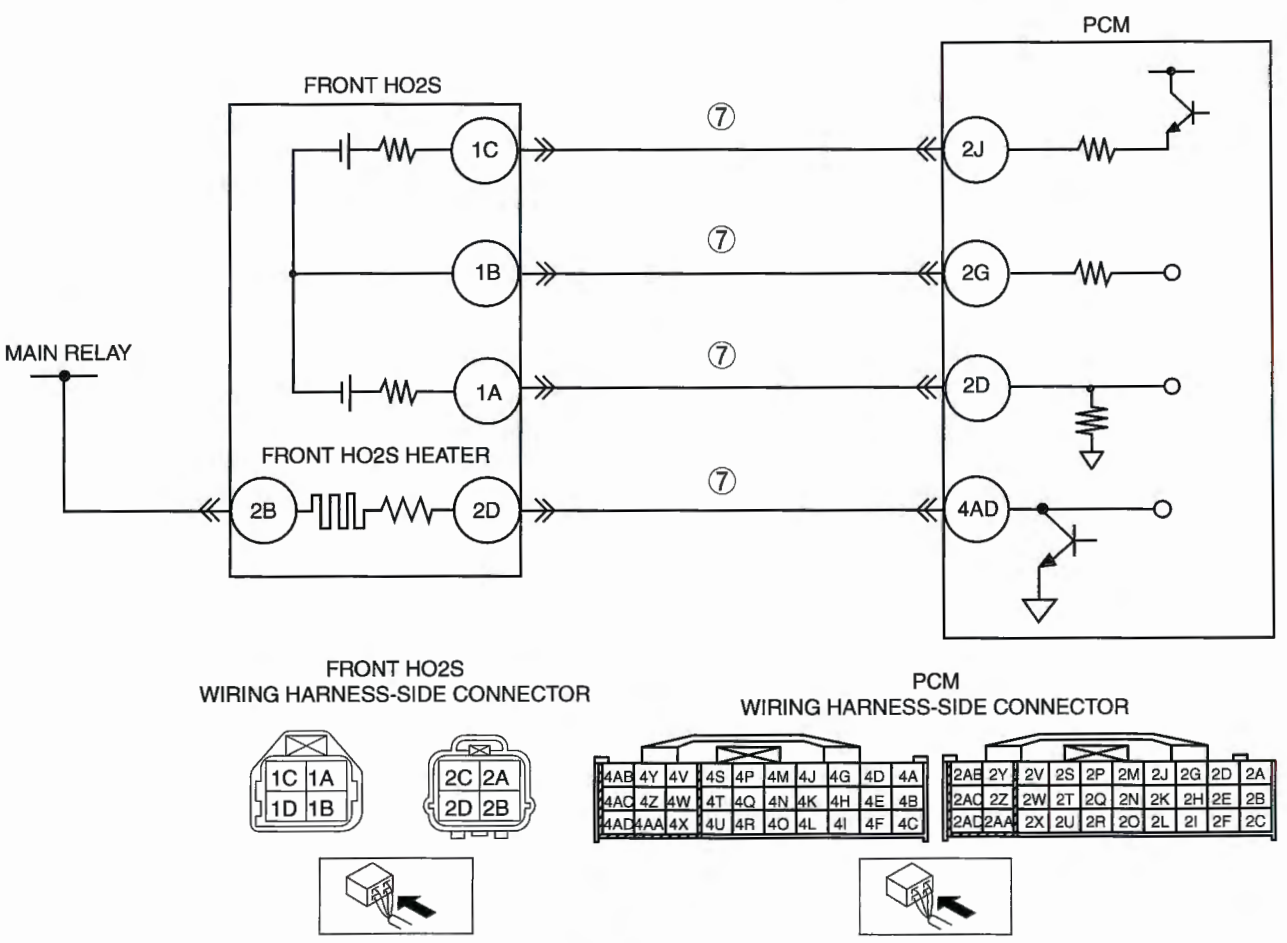

Diagnostic procedure

STEP	INSPECTION		ACTION
1	**VERIFY FREEZE FRAME DATA AND DIAGNOSTIC MONITORING TEST RESULTS HAVE BEEN RECORDED** • Have the FREEZE FRAME DATA and DIAGNOSTIC MONITORING TEST RESULTS (HO2S related) been recorded?	Yes	Go to the next step.
		No	Record the FREEZE FRAME DATA and DIAGNOSTIC MONITORING TEST RESULTS on the repair order, then go to the next step.
2	**VERIFY RELATED REPAIR INFORMATION AVAILABILITY** • Verify related service Bulletins and/or on-line repair information availability. • Is any related repair information available?	Yes	Perform the repair or diagnosis according to the available repair information. • If the vehicle is not repaired, go to the next step.
		No	Go to the next step.
3	**VERIFY RELATED PENDING AND STORED DTC** **Note** • If fuel monitor, DTC P0132 is retrieved, ignore it until P0134 is fixed. • Turn the ignition switch off, then to the ON position. (Engine off) • Verify pending and stored DTCs using the WDS or equivalent. • Is the DTC P2237 or P2251 also present?	Yes	Go to the appropriate DTC troubleshooting procedures.
		No	Go to the next step.
4	**IDENTIFY TRIGGER DTC FOR FREEZE FRAME DATA** • Is DTC P0134 on the FREEZE FRAME DATA?	Yes	Go to the next step.
		No	Go to troubleshooting procedures for the DTC on the FREEZE FRAME DATA. (See 01–02B–14 DTC TABLE [L3 WITH TC].)
5	**VERIFY CURRENT INPUT SIGNAL STATUS** • Warm up the engine. • Access O2S11 PID using the WDS or equivalent. • Verify the PID while racing engine in NEUTRAL. • Is the PID normal? — **–1.0—1.0 A** when idle — **More than 0.25 mA** just after releasing the of accelerator pedal is released (lean condition)	Yes	Go to Step 8.
		No	Go to the next step.
6	**INSPECT INSTALLATION OF FRONT HO2S** • Inspect if the front HO2S is loosely installed. • Is the sensor installed securely?	Yes	Go to the next step.
		No	Install the sensor securely, then go to Step 10.
7	**INSPECT EXHAUST SYSTEM FOR GAS LEAKAGE** • Visually inspect if there is any gas leakage between the exhaust manifold and front HO2S. • Is there gas leakage?	Yes	Repair or replace any malfunctioning exhaust part, then go to Step 10.
		No	• Inspect the following wiring harnesses at the wiring harness-side connector terminals for an open circuit, repair or the replace wiring harness if necessary. — Front HO2S terminal 1A and PCM terminal 2D — Front HO2S terminal 1B and PCM terminal 2G — Front HO2S terminal 1C and PCM terminal 2J — Front HO2S terminal 2D and PCM terminal 4AD • If all the items above are normal, replace the malfunctioning sensor. Then go to Step 10.
8	**INSPECT SEALING OF ENGINE COOLANT PASSAGE** • Perform the ENGINE COOLANT LEAKAGE INSPECTION. (See 01–12B–5 ENGINE COOLANT LEAKAGE INSPECTION [L3 WITH TC].) • Is there any malfunction?	Yes	Repair or replace the malfunctioning part according to the inspection results, then go to Step 10.
		No	Go to the next step.

STEP	INSPECTION		ACTION
9	**INSPECT ENGINE COMPRESSION** • Inspect the engine compression. (See 01–10B–9 COMPRESSION INSPECTION [L3 WITH TC].) • Is it normal?	Yes	Go to the next step.
		No	Perform the engine overhaul for repairs, then go to the next step.
10	**VERIFY TROUBLESHOOTING OF DTC P0134 COMPLETED** • Make sure to reconnect all disconnected connectors. • Turn the ignition switch to the ON position. (Engine off) • Clear the DTC from the memory using the WDS or equivalent. • Perform the PCM Adaptive Memory Produce Drive Mode and the HO2S heater, HO2S, and TWC Repair Verification Drive Mode. (See 01–02B–9 OBD-II DRIVE MODE [L3 WITH TC].) • Is the PENDING CODE for this DTC present?	Yes	Replace the PCM, then go to the next step. (See 01–40B–6 PCM REMOVAL/INSTALLATION [L3 WITH TC].)
		No	Go to the next step.
11	**VERIFY AFTER REPAIR PROCEDURE** • Perform the "AFTER REPAIR PROCEDURE". (See 01–02B–8 AFTER REPAIR PROCEDURE [L3 WITH TC].) • Are any DTCs present?	Yes	Go to the applicable DTC troubleshooting. (See 01–02B–14 DTC TABLE [L3 WITH TC].)
		No	Troubleshooting completed.

DTC P0137 [L3 WITH TC]

E6U010200100W52

DTC P0137	Rear HO2S circuit low input
DETECTION CONDITION	• The PCM monitors the input voltage from the rear HO2S. If the input voltage from the rear HO2S sensor is below **0.1 V** for **41.6 s**, the PCM determines that the circuit input is low. **MONITORING CONDITIONS** — HO2S,HO2S heater and TWC repair verification drive mode. — The following conditions are met. • Engine speed is above **1,500 rpm**. • Engine coolant temperature is **above 70 °C {158 °F}**. • Fuel injector control in rear HO2S is in closed loop control. • The PCM monitors the input voltage from the rear HO2S when the following conditions are met. Under the following monitoring conditions, if the input voltage from the rear HO2S does not exceed **0.1 V** through the short term fuel trim is controlled up to **20.5%** for **9.6 s**, the PCM determines that the sensor circuit input is low. **MONITORING CONDITIONS** — HO2S,HO2S heater and TWC repair verification drive mode. — The following conditions are met for **more than 20.8 s**. • Engine speed is **more than 1,500 rpm**. • Engine coolant temperature is **more than 70 °C {158 °F}**. **Diagnostic support note** • This is an intermittent monitor. (HO2S) • MIL illuminates if the PCM detects the above malfunctioning condition in two consecutive drive cycles or in one drive cycle while the DTC for the same malfunction has been stored in the PCM. • PENDING CODE is available if PCM detects the above malfunction conditions during first drive cycle. • FREEZE FRAME DATA is available. • DTCs are stored in the PCM memory.
POSSIBLE CAUSE	• Rear HO2S malfunction • Open circuit or short to ground in wiring between rear HO2S terminal A and PCM terminal 1Y • PCM malfunction

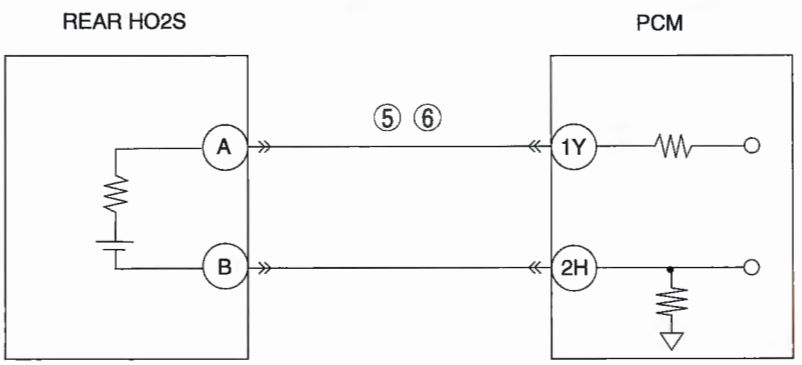

REAR HO2S
WIRING HARNESS-SIDE CONNECTOR

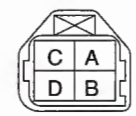

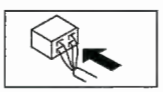

PCM
WIRING HARNESS-SIDE CONNECTOR

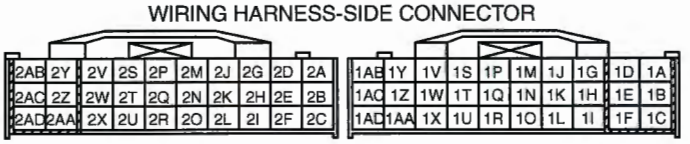

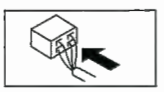

Diagnostic procedure

STEP	INSPECTION		ACTION
1	**VERIFY FREEZE FRAME DATA AND DIAGNOSTIC MONITORING TEST RESULTS HAVE BEEN RECORDED** • Have the FREEZE FRAME DATA and DIAGNOSTIC MONITORING TEST RESULTS (HO2S related) been recorded?	Yes	Go to the next step.
		No	Record the FREEZE FRAME DATA and DIAGNOSTIC MONITORING TEST RESULTS on the repair order, then go to the next step.
2	**VERIFY RELATED REPAIR INFORMATION AVAILABILITY** • Verify related Service Bulletins and/or on-line repair information availability. • Is any related repair information available?	Yes	Perform the repair or diagnosis according to the available repair information. If the vehicle is not repaired, go to the next step.
		No	Go to the next step.
3	**VERIFY RELATED PENDING CODE OR STORED DTC** • Turn the ignition switch off, then to the ON position (Engine off). • Verify the related PENDING CODE or stored DTCs using the WDS or equivalent. • Are other DTCs present?	Yes	Go to appropriate DTC troubleshooting procedure. (See01–02B–14 DTC TABLE [L3 WITH TC].)
		No	Go to the next step.
4	**IDENTIFY TRIGGER DTC FOR FREEZE FRAME DATA** • Is DTC P0137 on FREEZE FRAME DATA?	Yes	Go to the next step.
		No	Go to the troubleshooting for the DTC on the FREEZE FRAME DATA. (See01–02B–14 DTC TABLE [L3 WITH TC].)
5	**INSPECT REAR HO2S SIGNAL CIRCUIT FOR SHORT TO GROUND AT HARNESS** • Turn the ignition switch off. • Disconnect rear HO2S and PCM connectors. • Verify the continuity between rear HO2S sensor terminal A (wiring harness side) and body ground. • Is there continuity?	Yes	Repair for a short to ground circuit, then go to Step 7.
		No	Go to the next step.
6	**INSPECT REAR HO2S SIGNAL CIRCUIT FOR SHORT TO GROUND AT REAR HO2S** • Rear HO2S connector disconnected. • Verify the continuity between rear HO2S sensor terminal A (part side) and body ground. • Is there continuity?	Yes	Replace the rear HO2S then go to the next step.
		No	Go to the next step.
7	**VERIFY TROUBLESHOOTING OF DTC P0137 COMPLETED** • Make sure to reconnect all disconnected connectors. • Clear the DTC from the PCM memory using the WDS or equivalent. • Perform the HO2S heater, HO2S and TWC Repair Verification Drive Mode. (See01–02B–9 OBD-II DRIVE MODE [L3 WITH TC].) • Is the PENDING CODE for this DTC present?	Yes	Replace PCM, then go to the next step. (See01–40B–6 PCM REMOVAL/INSTALLATION [L3 WITH TC].)
		No	Go to the next step.
8	**VERIFY AFTER REPAIR PROCEDURE** • Perform the "After Repair Procedure". (See01–02B–8 AFTER REPAIR PROCEDURE [L3 WITH TC].) • Are any DTCs present?	Yes	Go to the applicable DTC inspection. (See01–02B–14 DTC TABLE [L3 WITH TC].)
		No	Troubleshooting completed.

DTC P0138 [L3 WITH TC]

E6U010200100W53

DTC P0138	Rear HO2S circuit high input
DETECTION CONDITION	• The PCM monitors the input voltage from the rear HO2S. If the input voltage from the rear HO2S sensor is **above 1.2 V** for **0.8 s**, the PCM determines that the circuit input is high. **Diagnostic support note** • This is an intermittent monitor (HO2S). • MIL illuminates if the PCM detects the above malfunction condition in two consecutive drive cycles or in one drive cycle while the DTC for the same malfunction has been stored in the PCM. • PENDING CODE is available if the PCM detects the above malfunction condition during first drive cycle. • FREEZE FRAME DATA is available. • DTCs are stored in the PCM memory.
POSSIBLE CAUSE	• Rear HO2S malfunction • Short to power supply in the wiring harness between rear HO2S terminal A and PCM terminal 1Y • Rear HO2S or PCM terminal shorted • PCM malfunction

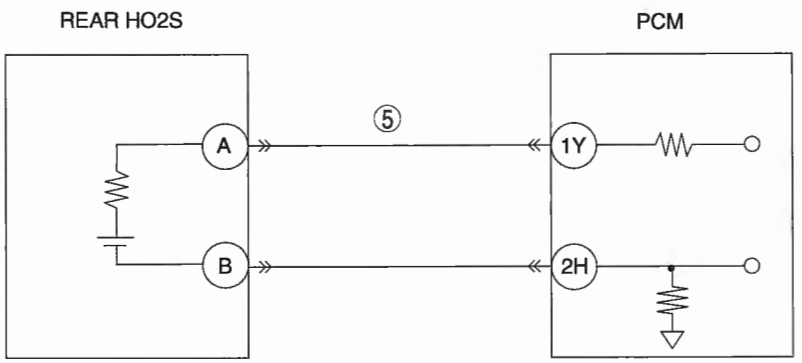

REAR HO2S
WIRING HARNESS-SIDE CONNECTOR



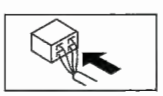

PCM
WIRING HARNESS-SIDE CONNECTOR

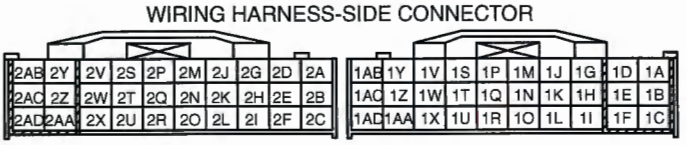

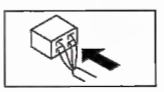

Diagnostic procedure

STEP	INSPECTION		ACTION
1	**VERIFY FREEZE FRAME DATA AND DIAGNOSTIC MONITORING TEST RESULTS HAVE BEEN RECORDED** • Have the FREEZE FRAME DATA and DIAGNOSTIC MONITORING TEST RESULTS (HO2S related) been recorded?	Yes	Go to the next step.
		No	Record the FREEZE FRAME DATA and DIAGNOSTIC MONITORING TEST RESULTS on the repair order, then go to the next step.
2	**VERIFY RELATED SERVICE INFORMATION AVAILABILITY** • Verify related service bulletins and/or repair Information availability. • Is any related Service Information available?	Yes	Perform the repair or diagnosis according to available Service Information. • If vehicle is not repaired, go to the next step.
		No	Go to the next step.
3	**VERIFY RELATED PENDING OR STORED DTC** • Turn the ignition switch off, then to the ON position. (Engine off) • Verify pending code or stored DTCs using WDS or equivalent. • Is other DTC present?	Yes	Go to the appropriate DTC troubleshooting procedures. (See 01–02B–14 DTC TABLE [L3 WITH TC].)
		No	Go to the next step.
4	**IDENTIFY TRIGGER DTC FOR FREEZE FRAME DATA** • Is DTC P0138 on FREEZE FRAME DATA?	Yes	Go to the next step.
		No	Go to the troubleshooting procedures for the DTC on the FREEZE FRAME DATA. (See 01–02B–14 DTC TABLE [L3 WITH TC].)
5	**INSPECT REAR HO2S SIGNAL CIRCUIT FOR SHORT TO POWER SUPPLY** • Turn the ignition switch off. • Disconnect rear HO2S connector. • Turn the ignition switch to the ON position. (Engine off) • Measure the voltage between rear HO2S terminal A (wiring harness-side) and body ground. • Is there any voltage?	Yes	Replace short to power supply, then go to Step 7.
		No	Go to the next step.
6	**VERIFY CURRENT INPUT SIGNAL STATUS** • Start the engine. • Access the O2S12 PID using the WDS or equivalent. • Verify the PID while racing the engine at least **10 times** in NEUTRAL. • Does the PID stay **above 0.55 V**?	Yes	Replace the sensor, then go to the next step. (See 01–15B–3 HO2S Removal Note.)
		No	Go to the next step.
7	**VERIFY TROUBLESHOOTING OF DTC P0138 COMPLETED** • Make sure to reconnect all disconnected connectors. • Turn the ignition switch to the ON position. (Engine off) • Clear the DTC from the memory using the WDS or equivalent. • Run the PCM adaptive memory procedure drive mode and HO2S heater, HO2S, and TWC repair verification drive mode. (See 01–02B–9 OBD-II DRIVE MODE [L3 WITH TC].) • Is the PENDING CODE for this DTC present?	Yes	Replace the PCM, then go to the next step. (See 01–40B–6 PCM REMOVAL/INSTALLATION [L3 WITH TC].)
		No	Go to the next step.
8	**VERIFY AFTER REPAIR PROCEDURE** • Perform the "AFTER REPAIR PROCEDURE". (See 01–02B–8 AFTER REPAIR PROCEDURE [L3 WITH TC].) • Are any DTCs present?	Yes	Go to the applicable DTC troubleshooting. (See 01–02B–14 DTC TABLE [L3 WITH TC].)
		No	Troubleshooting completed.

DTC P0139 [L3 WITH TC]

E6U010200100W54

DTC P0139	Rear HO2S circuit problem
DETECTION CONDITION	• The PCM monitors the rich (**0.4 V**) to lean (**0.3 V**) response time of the rear HO2S. The PCM measures the response time when the following conditions are met. The PCM determines that the rear HO2S response deteriorated when the measured response time is more than the threshold value (**130 ms**) five consecutive times. **MONITORING CONDITIONS** — HO2S heater, HO2S, and TWC Repair Verification Drive Mode or EGR, HO2S heater, HO2S, TWC, and EVAP System Repair Verification Drive Mode — The following conditions are met: • Fuel cut during deceleration • Engine speed is **more than 500 rpm**. • Engine coolant temperature is **more than 70 °C {158 °F}**. • HO2S (rear) output voltage is **more than 0.4 V**. • The PCM monitors for a time-out malfunction (when rear HO2S remains above **0.3 V** for longer than a specified period of time during fuel cut control). The PCM measure the amount of time from when the following conditions are met until the rear HO2S output voltage drops **below 0.3 V**. The PCM determines that a HO2S time-out malfunction has occurred when the detected time is more than the threshold value (**6.4 s**) three consecutive times. **MONITORING CONDITIONS** — HO2S heater, HO2S, and TWC Repair Verification Drive Mode or EGR, HO2S heater, HO2S, TWC, and EVAP System Repair Verification Drive Mode — The following conditions are met: • Fuel cut during deceleration • Engine speed is **more than 500 rpm**. • Engine coolant temperature is **more than 70 °C {158 °F}**. • HO2S (rear) is activated (**more than 0.55 V**). **Diagnostic support note** • This is an intermittent monitor. (HO2S) • The MIL illuminates if the PCM detects the above malfunction condition in two consecutive drive cycles or in one drive cycle while the DTC for the same malfunction has been stored in the PCM. • DIAGNOSTIC MONITORING TEST RESULTS is available. • PENDING CODE is available if the PCM detects the above malfunction condition during first drive cycle. • FREEZE FRAME DATA is available. • DTCs are stored in the PCM memory.
POSSIBLE CAUSE	• Rear HO2S deterioration • Rear HO2S malfunction • Rear HO2S looseness • Pressure regulator (built-in fuel pump unit) malfunction • Fuel pump malfunction • Fuel filter (built-in fuel pump unit) clogged or restricted • Fuel leakage on fuel line from fuel delivery pipe to fuel pump • Exhaust system leakage • Purge solenoid valve malfunction • Improper connection of purge solenoid hoses • Insufficient compression • Engine malfunction (Leakage engine coolant)

Diagnostic procedure

STEP	INSPECTION		ACTION
1	**VERIFY FREEZE FRAME DATA AND DIAGNOSTIC MONITORING TEST RESULTS HAVE BEEN RECORDED** • Have the FREEZE FRAME DATA and DIAGNOSTIC MONITORING TEST RESULTS (HO2S related) been recorded?	Yes	Go to the next step.
		No	Record the FREEZE FRAME DATA and DIAGNOSTIC MONITORING TEST RESULTS on the repair order, then go to the next step.
2	**VERIFY RELATED REPAIR INFORMATION AVAILABILITY** • Verify related Service Bulletins and/or-line repair information availability. • Is any related repair information available?	Yes	Perform the repair or diagnosis according to the available Service Information. • If the vehicle is not repaired, go to the next step.
		No	Go to the next step.
3	**VERIFY RELATED PENDING AND STORED DTC** • Turn the ignition switch off, then to the ON position (Engine off). • Verify pending and /or stored DTCs using the WDS or equivalent. • Is DTC P0443 also present?	Yes	Go to DTC P0443 troubleshooting procedures, then go to Step 13.
		No	Go to the next step.
4	**IDENTIFY TRIGGER DTC FOR FREEZE FRAME DATA** • Is DTC P0139 on the FREEZE FRAME DATA?	Yes	Go to the next step.
		No	Go to troubleshooting procedures for the DTC on the FREEZE FRAME DATA. (See 01–02B–14 DTC TABLE [L3 WITH TC].)
5	**VERIFY CURRENT INPUT SIGNAL STATUS** • Warm up the engine. • Access the O2S12 PID using the WDS or equivalent. • Inspect the PID under the following accelerator pedal conditions or NEUTRAL. • Is the PID normal? — **More than 0.55 V** the accelerator pedal is suddenly depressed (rich condition). — **Less than 0.55 V** just after accelerator pedal is released (lean condition).	Yes	Go to Step 8.
		No	Go to the next step.
6	**INSPECT INSTALLATION OF REAR HO2S** • Inspect if the rear HO2S is loosely installed. • Is the sensor installed securely?	Yes	Go to the next step.
		No	Retighten the sensor, then go to Step 13.
7	**INSPECT GAS LEAKAGE FROM EXHAUST SYSTEM** • Visually inspect if there is any gas leakage between the exhaust manifold and the rear HO2S. • Is there gas leakage?	Yes	Repair or replace the malfunctioning faulty exhaust part, then go to Step 13.
		No	Replace sensor, then go to Step 13.
8	**INSPECT LONG TERM FUEL TRIM** • Access the LONGFT1 PIDs • Compare it with the FREEZE FRAME DATA recorded at Step 1. • Is it below the FFD value?	Yes	The engine is driven under a rich condition. Go to the next step.
		No	The engine is driven under a lean condition. Go to Step 10.
9	**INSPECT FUEL LINE PRESSURE (Excessive fuel line pressure)** • Turn the ignition switch off. • Inspect the fuel line pressure while the engine is running. (See 01–14B–5 FUEL LINE PRESSURE INSPECTION [L3 WITH TC].) • Is the fuel line pressure normal?	Yes	Go to Step 12.
		No	Inspect fuel pump maximum pressure and fuel return pipe for clogging. (See 01–14B–16 FUEL PUMP UNIT INSPECTION [L3 WITH TC].) • If there is any problem, repair or replace the parts. • If all items above are normal, replace the fuel pump unit. Then go to Step 13.
10	**INSPECT FUEL LINE PRESSURE (Low fuel line pressure)** • Turn the ignition switch off. • Inspect the fuel line pressure while the engine is running. (See 01–14B–5 FUEL LINE PRESSURE INSPECTION [L3 WITH TC].) • Is the fuel line pressure normal?	Yes	Go to Step 12.
		No	Go to the next step.

STEP	INSPECTION		ACTION
11	**INSPECT FUEL LINE FROM FUEL PUMP TO FUEL DELIVERY PIPE** • Visually inspect the fuel line for any leakage. • Is there fuel leakage?	Yes	Replace the fuel line, then go to Step 13.
		No	Inspect the fuel filters for the following: • Foreign material or staining inside the fuel filter (low-pressure side) Perform the following actions according to the result. • If foreign material or staining is found inside fuel filter (low-pressure side), clean the fuel tank and filter. • If normal, replace fuel pump unit. Then go to Step 13.
12	**INSPECT SEALING OF ENGINE COOLANT PASSAGE** • Perform the "ENGINE COOLANT LEAKAGE INSPECTION." (See 01–12B–5 ENGINE COOLANT LEAKAGE INSPECTION [L3 WITH TC].) • Is there any malfunction?	Yes	Go to the next step.
		No	Repair or replace the malfunctioning part according to inspection results. Then go to the next step.
13	**VERIFY TROUBLESHOOTING OF DTC P0139 COMPLETED** • Make sure to reconnect all disconnected connectors. • Turn the ignition switch to the ON position. (Engine off) • Clear the DTC from the memory using the WDS or equivalent. • Perform the "PCM Adaptive Memory Produce Drive Mode" and "HO2S heater, HO2S, and TWC Repair Verification Drive Mode". (See 01–02B–9 OBD-II DRIVE MODE [L3 WITH TC].) • Is the PENDING CODE for this DTC present?	Yes	Replace the PCM, then go to the next step. (See 01–40B–6 PCM REMOVAL/INSTALLATION [L3 WITH TC].)
		No	Go to the next step.
14	**VERIFY AFTER REPAIR PROCEDURE** • Perform the "AFTER REPAIR PROCEDURE". (See 01–02B–8 AFTER REPAIR PROCEDURE [L3 WITH TC].) • Are any DTCs present?	Yes	Go to the applicable DTC troubleshooting. (See 01–02B–14 DTC TABLE [L3 WITH TC].)
		No	Troubleshooting completed.

DTC P0140 [L3 WITH TC]

E6U010200100W55

DTC P0140	Rear HO2S no activity detected
DETECTION CONDITION	• The PCM monitors the input voltage from the rear HO2S when the following conditions are met. Under the following monitoring conditions, if the input voltage from the rear HO2S does not even **exceed 0.55 V** though the short term fuel trim is controlled up to **20.5%** for **9.6 s**, the PCM determines that sensor circuit is not activated. **MONITORING CONDITIONS** — HO2S, HO2S heater and TWC repair verification drive mode — The following conditions are met for **above 20.8 s** • Engine speed is **above 1,500 rpm** • Engine coolant temperature is **above 70 °C {158 °F}** • Rear HO2S voltage is **above 0.1V** **Diagnostic support note** • This is an intermittent monitor (HO2S). • MIL illuminates if the PCM detects the above malfunction condition in two consecutive drive cycles or in one drive cycle while the DTC for the same malfunction has been stored in the PCM. • PENDING CODE is available if the PCM detects the above malfunction condition during first drive cycle. • FREEZE FRAME DATA is available. • DTCs are stored in the PCM memory.
POSSIBLE CAUSE	• Rear HO2S deterioration • Rear HO2S heater malfunction • Exhaust system leakage • Open circuit or short to ground in the wiring harness between rear HO2S terminal A and PCM terminal 1Y • Insufficient compression • Engine malfunction

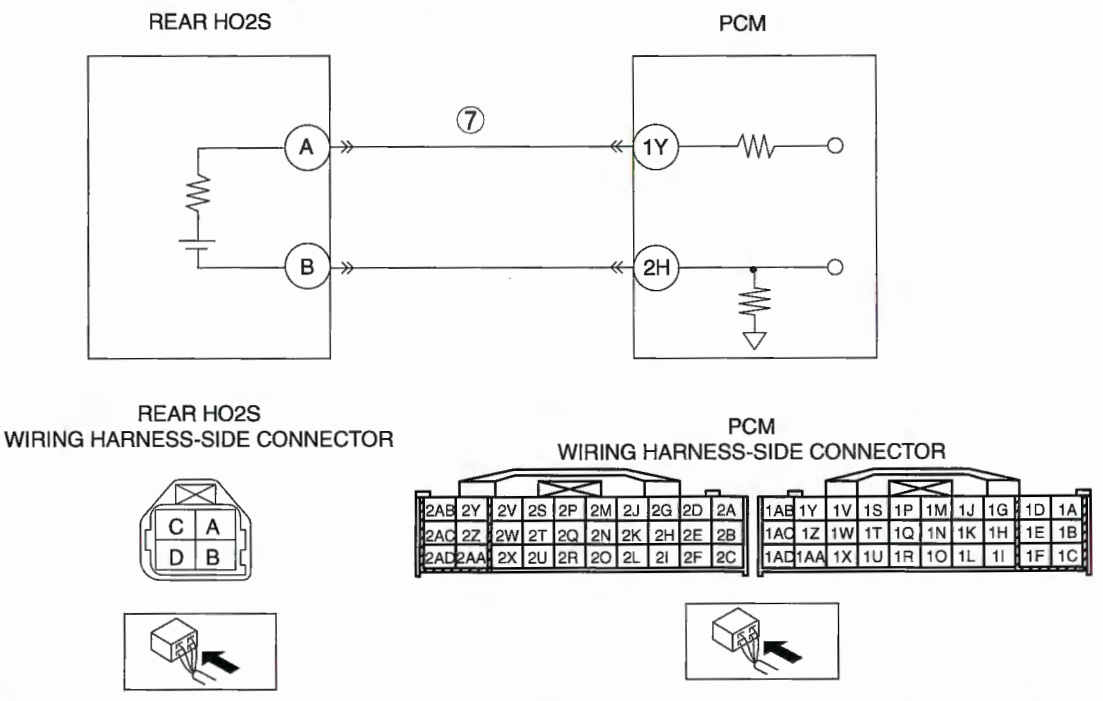

Diagnostic procedure

STEP	INSPECTION		ACTION
1	**VERIFY FREEZE FRAME DATA AND DIAGNOSTIC MONITORING TEST RESULTS HAVE BEEN RECORDED** • Have the FREEZE FRAME DATA and DIAGNOSTIC MONITORING TEST RESULTS (HO2S related) been recorded?	Yes	Go to the next step.
		No	Record the FREEZE FRAME DATA and DIAGNOSTIC MONITORING TEST RESULTS on the repair order, then go to the next step.
2	**VERIFY RELATED REPAIR INFORMATION AVAILABILITY** • Verify related service Bulletins and/or on-line repair information availability. • Is any related repair information available?	Yes	Perform the repair or diagnosis according to the available repair information. • If the vehicle is not repaired, go to the next step.
		No	Go to the next step.

STEP	INSPECTION		ACTION
3	**VERIFY RELATED PENDING AND STORED DTC** **Note** • If the fuel monitor, DTC P0132 is retrieved, ignore it until P0140 is fixed. • Turn the ignition switch off, then to the ON position. (Engine off) • Verify pending and stored DTCs using the WDS or equivalent. • Are other DTCs present?	Yes	Go to the appropriate DTC troubleshooting procedures. (See 01–02B–14 DTC TABLE [L3 WITH TC].)
		No	Go to the next step.
4	**IDENTIFY TRIGGER DTC FOR FREEZE FRAME DATA** • Is DTC P0140 on the FREEZE FRAME DATA?	Yes	Go to the next step.
		No	Go to troubleshooting procedures for the DTC on the FREEZE FRAME DATA. (See 01–02B–14 DTC TABLE [L3 WITH TC].)
5	**VERIFY CURRENT INPUT SIGNAL STATUS** • Warm up the engine. • Access the O2S12 or the P0140 PID using the WDS or equivalent. • Verify the PID while racing the engine at least **10 times** in NEUTRAL. • Is the PID reading normal? — **More than 0.55 V** at least once during engine racing	Yes	Go to Step 8.
		No	Go to the next step.
6	**INSPECT INSTALLATION OF REAR HO2S** • Check if the rear HO2S is loosely installed. • Is the sensor installed securely?	Yes	Go to the next step.
		No	Install the sensor securely, then go to Step 10.
7	**INSPECT GAS LEAKAGE FROM EXHAUST SYSTEM** • Visually check if any gas leakage is found between the exhaust pipe and the rear HO2S. • Is there gas leakage?	Yes	Repair or replace any malfunctioning exhaust part, then go to Step 10.
		No	• Inspect the following wiring harnesses for an open or short to the ground circuit, repair or replace the wiring harness if necessary. — Rear HO2S terminal A (wiring harness-side) to PCM terminal 1Y (wiring harness-side) • Repair or replace the wiring harness if necessary. • If all items above are normal, replace the malfunctioning sensor. Then go to Step 10.
8	**INSPECT SEALING OF ENGINE COOLANT PASSAGE** • Perform the ENGINE COOLANT LEAKAGE INSPECTION. (See01–12B–5 ENGINE COOLANT LEAKAGE INSPECTION [L3 WITH TC].) • Is the cooling system hold pressure normal?	Yes	Repair or the replace the malfunctioning part according to the inspection result. Then go to Step 10.
		No	Go to the next step.
9	**INSPECT ENGINE COMPRESSION** • Inspect the engine compression. (See 01–10B–9 COMPRESSION INSPECTION [L3 WITH TC].) • Is it normal?	Yes	Go to the next step.
		No	Perform engine overhaul for repairs, then go to the next step.
10	**VERIFY TROUBLESHOOTING OF DTC P0140 COMPLETED** • Make sure to reconnect all disconnected connectors. • Turn the ignition switch to the ON position. (Engine off) • Clear the DTC from the memory using the WDS or equivalent. • Perform the HO2S heater, HO2S, and TWC Repair Verification Drive Mode. (See 01–02B–9 OBD-II DRIVE MODE [L3 WITH TC].) • Is the PENDING CODE for this DTC present?	Yes	Replace the PCM, then go to the next step. (See 01–40B–6 PCM REMOVAL/INSTALLATION [L3 WITH TC].)
		No	Go to the next step.
11	**VERIFY AFTER REPAIR PROCEDURE** • Perform the "AFTER REPAIR PROCEDURE". (See 01–02B–8 AFTER REPAIR PROCEDURE [L3 WITH TC].) • Are any DTCs present?	Yes	Go to the applicable DTC troubleshooting. (See 01–02B–14 DTC TABLE [L3 WITH TC].)
		No	Troubleshooting completed.

DTC P0192 [L3 WITH TC]

E6U010200100W56

DTC P0192	Fuel rail pressure sensor circuit low input
DETECTION CONDITION	• If the input voltage from the fuel pressure sensor is less than **0.19 V** for **1.3 s**, the PCM determines that th fuel pressure sensor circuit is low. **Diagnostic support note** • This is a continuous monitor (CCM). • The MIL illuminates if the PCM detects the above malfunction condition during first drive cycle. • FREEZE FRAME DATA is available. • DTCs are stored in the PCM memory.
POSSIBLE CAUSE	• Fuel pressure sensor malfunction • Short to ground in wiring harness between fuel pressure sensor terminal B and PCM terminal 1V • Connector or terminal malfunction • PCM malfunction

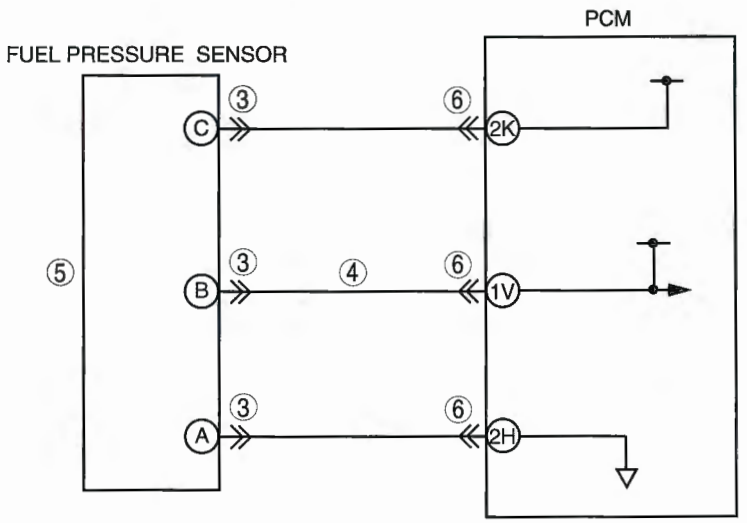

FUEL PRESSURE SENSOR
WIRING HARNESS-SIDE CONNECTOR

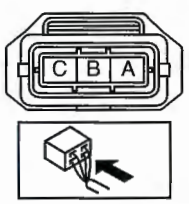

PCM
WIRING HARNESS-SIDE CONNECTOR

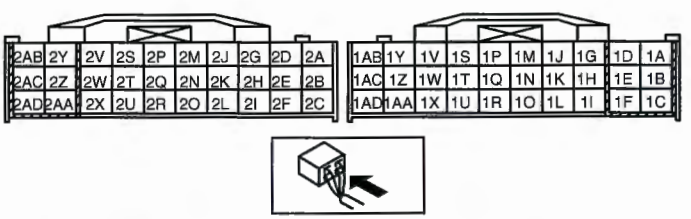

Diagnostic procedure

STEP	INSPECTION		ACTION
1	**VERIFY FREEZE FRAME DATA HAS BEEN RECORDED** • Has the FREEZE FRAME DATA been recorded?	Yes	Go to the next step.
		No	Record the FREEZE FRAME DATA on the repair order, then go to the next step.
2	**VERIFY RELATED REPAIR INFORMATION AVAILABILITY** • Verify related service repair information availability. • Is any related repair information available?	Yes	Perform the repair or diagnosis according to the available repair information. • If the vehicle is not repaired, go to the next step.
		No	Go to the next step.
3	**INSPECT FUEL PRESSURE SENSOR CONNECTOR FOR POOR CONNECTION** • Turn the ignition switch off. • Disconnect the fuel pressure sensor connector. • Inspect for poor connection (such as damaged/ pulled-out pins, corrosion). • Is there any malfunction?	Yes	Repair or replace the terminal, then go to Step 7.
		No	Go to the next step.
4	**INSPECT FUEL PRESSURE SENSOR SIGNAL CIRCUIT FOR SHORT TO GROUND** • Turn the ignition switch off. • Inspect for continuity between the fuel pressure sensor terminal B (wiring harness-side) and body ground. • Is there continuity?	Yes	Repair or replace the wiring harness for a possible short to ground, then go to Step 7.
		No	Go to the next step.
5	**INSPECT FUEL PRESSURE SENSOR** • Inspect the fuel pressure sensor. (See 01–40B–34 FUEL PRESSURE SENSOR INSPECTION [L3 WITH TC].) • Is there any malfunction?	Yes	Replace the fuel pressure sensor, then go to Step 7. (See 01–40B–34 FUEL PRESSURE SENSOR REMOVAL/ INSTALLATION [L3 WITH TC].)
		No	Go to the next step.
6	**INSPECT PCM CONNECTOR FOR POOR CONNECTION** • Turn the ignition switch off. • Disconnect the PCM connector. • Inspect for poor connection (such as damaged/ pulled-out pins, corrosion). • Is there any malfunction?	Yes	Repair or replace the terminal, then go to the next step.
		No	Go to the next step.
7	**VERIFY TROUBLESHOOTING OF DTC P0192 COMPLETED** • Make sure to reconnect all the disconnected connectors. • Clear the DTC from the PCM memory using the WDS or equivalent. • Start the engine. • Is the same DTC present?	Yes	Replace the PCM, then go to the next step. (See 01–40B–6 PCM REMOVAL/INSTALLATION [L3 WITH TC].)
		No	Go to the next step.
8	**VERIFY AFTER REPAIR PROCEDURE** • Perform the "AFTER REPAIR PROCEDURE". (See 01–02B–8 AFTER REPAIR PROCEDURE [L3 WITH TC].) • Are any DTCs present?	Yes	Go to the applicable DTC inspection. (See 01–02B–14 DTC TABLE [L3 WITH TC].)
		No	DTC troubleshooting completed.

DTC P0193 [L3 WITH TC]

E6U010200100W57

DTC P0193	Fuel rail pressure sensor circuit high input
DETECTION CONDITION	• If the input voltage from the fuel pressure sensor is more than **4.8 V** for **1.3 s**, the PCM determines that the fuel pressure sensor circuit is high. **Diagnostic support note** • This is a continuous monitor (CCM). • The MIL illuminates if the PCM detects the above malfunction condition during first drive cycle. • FREEZE FRAME DATA is available. • DTCs are stored in the PCM memory.
POSSIBLE CAUSE	• Fuel pressure sensor malfunction • Open circuit in the wiring harness between fuel pressure sensor terminal A and PCM terminal 2H • Short to power in the wiring harness between fuel pressure sensor terminal B and PCM terminal 1V • Connector or terminal malfunction • PCM malfunction

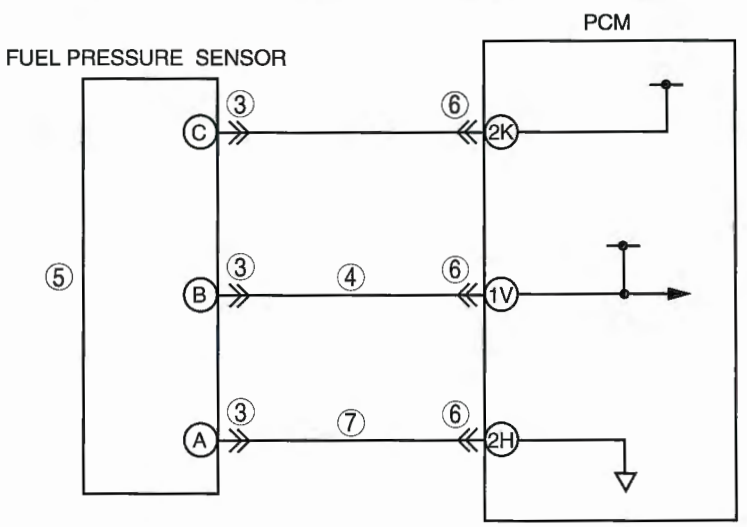

FUEL PRESSURE SENSOR
WIRING HARNESS-SIDE CONNECTOR



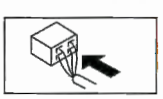

PCM
WIRING HARNESS-SIDE CONNECTOR

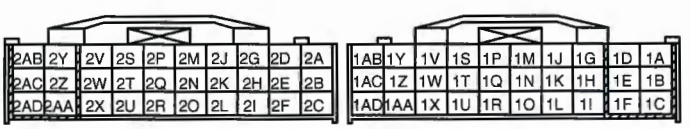

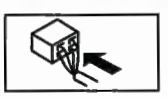

Diagnostic procedure

STEP	INSPECTION		ACTION
1	**VERIFY FREEZE FRAME DATA HAS BEEN RECORDED** • Has the FREEZE FRAME DATA been recorded?	Yes	Go to the next step.
		No	Record the FREEZE FRAME DATA on the repair order, then go to the next step.
2	**VERIFY RELATED REPAIR INFORMATION AVAILABILITY** • Verify related service repair information availability. • Is any related repair information available?	Yes	Perform the repair or diagnosis according to the available repair information. • If the vehicle is not repaired, go to the next step.
		No	Go to the next step.
3	**INSPECT FUEL PRESSURE SENSOR CONNECTOR FOR POOR CONNECTION** • Turn the ignition switch off. • Disconnect the fuel pressure sensor connector. • Inspect for poor connection (such as damaged/ pulled-out pins, corrosion). • Is there any malfunction?	Yes	Repair or replace the terminal, then go to Step 8.
		No	Go to the next step.
4	**INSPECT FUEL PRESSURE SENSOR SIGNAL CIRCUIT FOR SHORT TO POWER SUPPLY** • Turn the ignition switch to the ON position (Engine off). • Measure the voltage between the fuel pressure sensor terminal B (wiring harness-side) and body ground. • Is the voltage **B+**?	Yes	Repair or replace the wiring harness for a possible short to power supply, then go to the Step 8.
		No	Go to the next step.
5	**INSPECT FUEL PRESSURE SENSOR** • Inspect the fuel pressure sensor. (See 01–40B–34 FUEL PRESSURE SENSOR INSPECTION [L3 WITH TC].) • Is there any malfunction?	Yes	Replace the fuel pressure sensor, then go to Step 8. (See 01–40B–34 FUEL PRESSURE SENSOR REMOVAL/ INSTALLATION [L3 WITH TC].)
		No	Go to the next step.
6	**INSPECT PCM CONNECTOR FOR POOR CONNECTION** • Turn the ignition switch off. • Disconnect the PCM connector. • Inspect for poor connection (such as damaged/ pulled-out pins, corrosion). • Is there any malfunction?	Yes	Repair or replace the terminal, then go to Step 8.
		No	Go to the next step.
7	**INSPECT FUEL PRESSURE SENSOR CIRCUIT FOR OPEN CIRCUIT** • Turn the ignition switch off. • Inspect for continuity between the fuel pressure sensor terminal A (wiring harness-side) and PCM terminal 2H (wiring harness-side). • Is there continuity?	Yes	Go to the next step.
		No	Repair or replace the wiring harness for a possible open circuit, then go to the next step.
8	**VERIFY TROUBLESHOOTING OF DTC P0193 COMPLETED** • Make sure to reconnect all the disconnected connectors. • Clear the DTC from the PCM memory using the WDS or equivalent. • Start the engine. • Is the same DTC present?	Yes	Replace the PCM, then go to the next step. (See 01–40B–6 PCM REMOVAL/INSTALLATION [L3 WITH TC].)
		No	Go to the next step.
9	**VERIFY AFTER REPAIR PROCEDURE** • Perform the "AFTER REPAIR PROCEDURE". (See 01–02B–8 AFTER REPAIR PROCEDURE [L3 WITH TC].) • Are any DTCs present?	Yes	Go to the applicable DTC inspection. (See 01–02B–14 DTC TABLE [L3 WITH TC].)
		No	DTC troubleshooting completed.

DTC P0201 [L3 WITH TC]

E6U010200200W03

DTC P0201	Injector circuit/open cylinder No.1
DETECTION CONDITION	• If the fuel injection verification signal is not input at **255 times** continuously even though the PCM drives the fuel injector No.1, the PCM determines that there is an open circuit in the fuel injector No.1 control circuit. **MONITORING CONDITION** — The following conditions are met: • Engine speed: **4,000 rpm or less** • Battery voltage: **10.03 V or more** • Fuel injection control: except during fuel cut **Diagnostic support note** • This is a continuous monitor (CCM). • The MIL illuminates if the PCM detects the above malfunction condition during first drive cycle. • FREEZE FRAME DATA is available. • DTCs are stored in the PCM memory.
POSSIBLE CAUSE	• Fuel injector No.1 malfunction • Injector driver module malfunction • Connector or terminal malfunction • Open circuit between fuel injector No.1 terminal B and injector driver module terminal 1F • Open circuit between fuel injector No.1 terminal A and injector driver module terminal 1E • Short to power supply between fuel injector No.1 terminal A and injector driver module terminal 1E • Short to ground between fuel injector No.1 terminal B and injector driver module terminal 1F • Short to ground between fuel injector No.1 terminal A and injector driver module terminal 1E • PCM malfunction

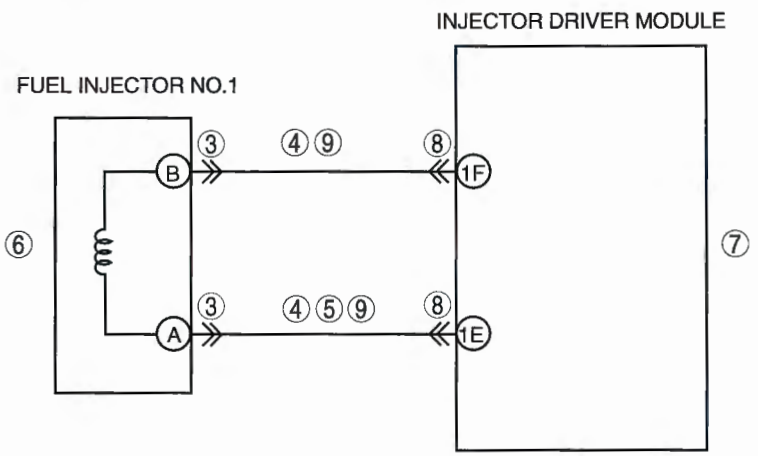

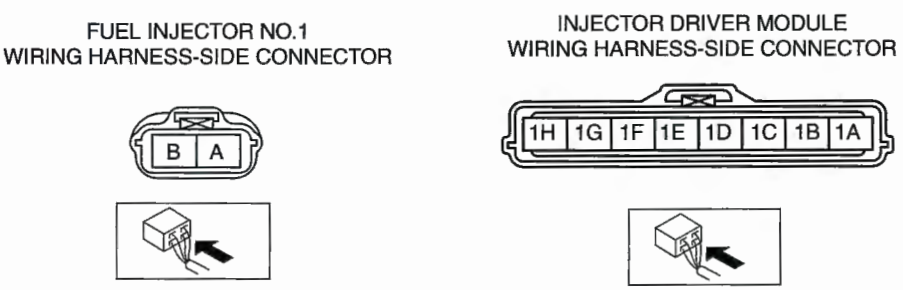

Diagnostic procedure

STEP	INSPECTION		ACTION
1	**VERIFY FREEZE FRAME DATA HAS BEEN RECORDED** • Has the FREEZE FRAME DATA been recorded?	Yes	Go to the next step.
		No	Record the FREEZE FRAME DATA on the repair order, then go to the next step.
2	**VERIFY RELATED REPAIR INFORMATION AVAILABILITY** • Verify related Service Bulletins and/or on-line repair information availability. • Is any related repair information available?	Yes	Perform the repair or diagnosis according to the available repair information. • If the vehicle is not repaired, go to the next step.
		No	Go to the next step.

STEP	INSPECTION		ACTION
3	**INSPECT FUEL INJECTOR NO.1 CONNECTOR FOR POOR CONNECTION** • Turn the ignition switch off. • Disconnect the fuel injector No.1 connector. • Inspect for poor connection (such as damaged/ pulled-out pins, corrosion). • Is there any malfunction?	Yes	Repair or replace the terminal, then go to Step 10.
		No	Go to the next step.
4	**INSPECT FUEL INJECTOR NO.1 CIRCUIT FOR SHORT TO GROUND** • Turn the ignition switch off. • Inspect for continuity between the following terminals: — Fuel injector No.1 terminal B (wiring harness-side) and body ground — Fuel injector No.1 terminal A (wiring harness-side) and body ground • Is there continuity?	Yes	Repair or replace the wiring harness for a possible short to ground, then go to Step 10.
		No	Go to the next step.
5	**INSPECT FUEL INJECTOR NO.1 CIRCUIT FOR SHORT TO POWER SUPPLY** • Turn the ignition switch to the ON position (Engine off). • Measure the voltage between the fuel injector No.1 terminal A (wiring harness-side) and body ground. • Is the voltage **B+**?	Yes	Repair or replace the wiring harness for a possible short to power supply, then go to Step 10.
		No	Go to the next step.
6	**INSPECT FUEL INJECTOR NO.1** • Inspect the fuel injector No.1. (See 01–14B–29 FUEL INJECTOR INSPECTION [L3 WITH TC].) • Is there any malfunction?	Yes	Replace fuel injector No.1, then go to Step 10. (See 01–14B–25 FUEL INJECTOR REMOVAL/ INSTALLATION [L3 WITH TC].)
		No	Go to the next step.
7	**INSPECT INJECTOR DRIVER MODULE** • Inspect the injector driver module. (See 01–40B–21 INJECTOR DRIVER MODULE INSPECTION [L3 WITH TC].) • Is there malfunction?	Yes	Replace the injector driver module, then go to Step 10. (See 01–40B–21 INJECTOR DRIVER MODULE REMOVAL/INSTALLATION [L3 WITH TC].)
		No	Go to the next step.
8	**INSPECT PCM CONNECTOR FOR POOR CONNECTION** • Turn the ignition switch off. • Disconnect the PCM connector. • Inspect for poor connection (such as damaged/ pulled-out pins, corrosion). • Is there any malfunction?	Yes	Repair or replace the terminal, then go to Step 10.
		No	Go to the next step.
9	**INSPECT FUEL INJECTOR NO.1 CIRCUIT FOR OPEN CIRCUIT** • Turn the ignition switch off. • Inspect for continuity between the following terminals: — Fuel injector No.1 terminal B (wiring harness-side) and PCM terminal 1F (wiring harness-side) — Fuel injector No.1 terminal A (wiring harness-side) and PCM terminal 1E (wiring harness-side) • Is there continuity?	Yes	Go to the next step.
		No	Repair or replace the wiring harness for a possible open circuit, then go to the next step.
10	**VERIFY TROUBLESHOOTING OF DTC P0201 COMPLETED** • Make sure to reconnect all disconnected connectors. • Turn the ignition switch to the ON position. • Clear the DTC from the PCM memory using the WDS or equivalent. • Start the engine. • Is the same DTC present?	Yes	Replace the PCM, then go to the next step. (See 01–40B–6 PCM REMOVAL/INSTALLATION [L3 WITH TC].)
		No	Go to the next step.
11	**VERIFY AFTER REPAIR PROCEDURE** • Perform "AFTER REPAIR PROCEDURE". (See 01–02B–8 AFTER REPAIR PROCEDURE [L3 WITH TC].) • Are any DTCs present?	Yes	Go to the applicable DTC inspection. (See 01–02B–14 DTC TABLE [L3 WITH TC].)
		No	DTC troubleshooting completed.

DTC P0202 [L3 WITH TC]

E6U010200200W04

DTC P0202	Injector circuit/open cylinder No.2
DETECTION CONDITION	• If the fuel injection verification signal is not input at **255 times** continuously even though the PCM drives th fuel injector No.2, the PCM determines that there is an open circuit in the fuel injector No.2 control circuit. **MONITORING CONDITION** — The following conditions are met: • Engine speed: **4,000 rpm or less** • Battery voltage: **10.03 V or more** • Fuel injection control: except during fuel cut **Diagnostic support note** • This is a continuous monitor (CCM). • The MIL illuminates if the PCM detects the above malfunction condition during first drive cycle. • FREEZE FRAME DATA is available. • DTCs are stored in the PCM memory.
POSSIBLE CAUSE	• Fuel injector No.2 malfunction • Injector driver module malfunction • Connector or terminal malfunction • Open circuit between fuel injector No.2 terminal B and injector driver module terminal 1A • Open circuit between fuel injector No.2 terminal A and injector driver module terminal 1B • Short to power supply between fuel injector No.2 terminal A and injector driver module terminal 1B • Short to ground between fuel injector No.2 terminal B and injector driver module terminal 1A • Short to ground between fuel injector No.2 terminal A and injector driver module terminal 1B • PCM malfunction

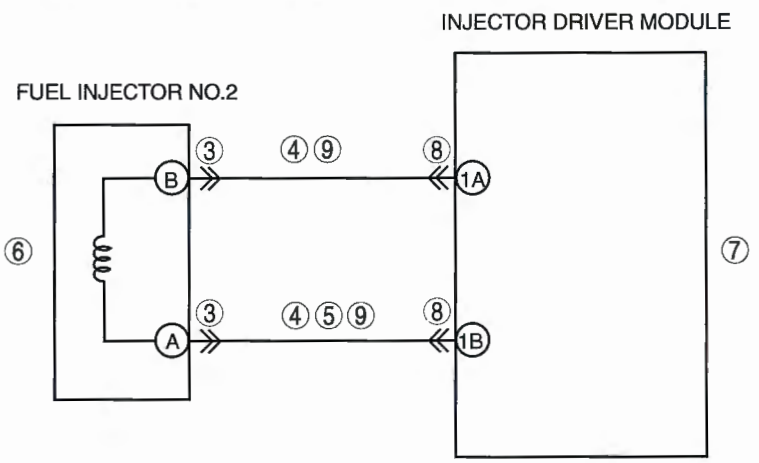

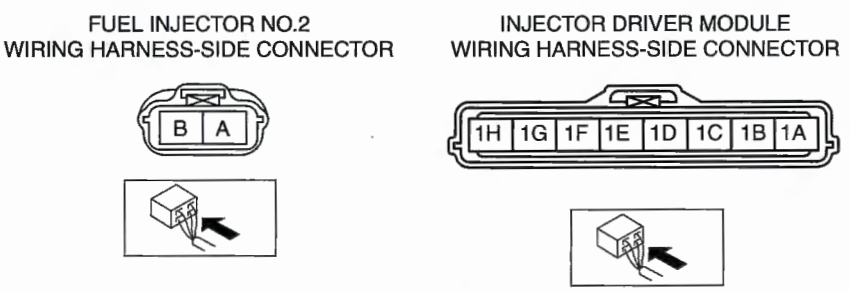

Diagnostic procedure

STEP	INSPECTION		ACTION
1	**VERIFY FREEZE FRAME DATA HAS BEEN RECORDED** • Has the FREEZE FRAME DATA been recorded?	Yes	Go to the next step.
		No	Record the FREEZE FRAME DATA on the repair order, then go to the next step.
2	**VERIFY RELATED REPAIR INFORMATION AVAILABILITY** • Verify related Service Bulletins and/or on-line repair information availability. • Is any related repair information available?	Yes	Perform the repair or diagnosis according to the available repair information. • If the vehicle is not repaired, go to the next step.
		No	Go to the next step.

STEP	INSPECTION		ACTION
3	**INSPECT FUEL INJECTOR NO.2 CONNECTOR FOR POOR CONNECTION** • Turn the ignition switch off. • Disconnect the fuel injector No.2 connector. • Inspect for poor connection (such as damaged/ pulled-out pins, corrosion). • Is there any malfunction?	Yes	Repair or replace the terminal, then go to Step 10.
		No	Go to the next step.
4	**INSPECT FUEL INJECTOR NO.2 CIRCUIT FOR SHORT TO GROUND** • Turn the ignition switch off. • Inspect for continuity between the following terminals: — Fuel injector No.2 terminal B (wiring harness-side) and body ground — Fuel injector No.2 terminal A (wiring harness-side) and body ground • Is there continuity?	Yes	Repair or replace the wiring harness for a possible short to ground, then go to Step 10.
		No	Go to the next step.
5	**INSPECT FUEL INJECTOR NO.2 CIRCUIT FOR SHORT TO POWER SUPPLY** • Turn the ignition switch to the ON position (Engine off). • Measure the voltage between the fuel injector No.2 terminal A (wiring harness-side) and body ground. • Is the voltage **B+**?	Yes	Repair or replace the wiring harness for a possible short to power supply, then go to Step 10.
		No	Go to the next step.
6	**INSPECT FUEL INJECTOR NO.2** • Inspect the fuel injector No.2. (See 01–14B–29 FUEL INJECTOR INSPECTION [L3 WITH TC].) • Is there any malfunction?	Yes	Replace the fuel injector No.2, then go to Step 10. (See 01–14B–25 FUEL INJECTOR REMOVAL/ INSTALLATION [L3 WITH TC].)
		No	Go to the next step.
7	**INSPECT INJECTOR DRIVER MODULE** • Inspect the injector driver module. (See 01–40B–21 INJECTOR DRIVER MODULE INSPECTION [L3 WITH TC].) • Is there malfunction?	Yes	Replace the injector driver module, then go to Step 10. (See 01–40B–21 INJECTOR DRIVER MODULE REMOVAL/INSTALLATION [L3 WITH TC].)
		No	Go to the next step.
8	**INSPECT PCM CONNECTOR FOR POOR CONNECTION** • Turn the ignition switch off. • Disconnect the PCM connector. • Inspect for poor connection (such as damaged/ pulled-out pins, corrosion). • Is there any malfunction?	Yes	Repair or replace the terminal, then go to Step 10.
		No	Go to the next step.
9	**INSPECT FUEL INJECTOR NO.2 CIRCUIT FOR OPEN CIRCUIT** • Turn the ignition switch off. • Inspect for continuity between the following terminals: — Fuel injector No.2 terminal B (wiring harness-side) and PCM terminal 1A (wiring harness-side) — Fuel injector No.2 terminal A (wiring harness-side) and PCM terminal 1B (wiring harness-side) • Is there continuity?	Yes	Go to the next step.
		No	Repair or replace the wiring harness for a possible open circuit, then go to the next step.
10	**VERIFY TROUBLESHOOTING OF DTC P0202 COMPLETED** • Make sure to reconnect all disconnected connectors. • Turn the ignition switch to the ON position. • Clear the DTC from the PCM memory using the WDS or equivalent. • Start the engine. • Is the same DTC present?	Yes	Replace the PCM, then go to the next step. (See 01–40B–6 PCM REMOVAL/INSTALLATION [L3 WITH TC].)
		No	Go to the next step.
11	**VERIFY AFTER REPAIR PROCEDURE** • Perform "AFTER REPAIR PROCEDURE". (See 01–02B–8 AFTER REPAIR PROCEDURE [L3 WITH TC].) • Are any DTCs present?	Yes	Go to the applicable DTC inspection. (See 01–02B–14 DTC TABLE [L3 WITH TC].)
		No	DTC troubleshooting completed.

DTC P0203 [L3 WITH TC]

E6U010200200W05

DTC P0203	Injector circuit/open cylinder No.3
DETECTION CONDITION	• If the fuel injection verification signal is not input at **255 times** continuously even though the PCM drives fuel injector No.3, the PCM determines that there is an open circuit in the fuel injector No.3 control circuit. **MONITORING CONDITION** — The following conditions are met: • Engine speed: **4,000 rpm or less** • Battery voltage: **10.03 V or more** • Fuel injection control: except during fuel cut **Diagnostic support note** • This is a continuous monitor (CCM). • The MIL illuminates if the PCM detects the above malfunction condition during first drive cycle. • FREEZE FRAME DATA is available. • DTCs are stored in the PCM memory.
POSSIBLE CAUSE	• Fuel injector No.3 malfunction • Injector driver module malfunction • Connector or terminal malfunction • Open circuit between fuel injector No.3 terminal B and injector driver module terminal 1A • Open circuit between fuel injector No.3 terminal A and injector driver module terminal 1C • Short to power supply between fuel injector No.3 terminal A and injector driver module terminal 1C • Short to ground between fuel injector No.3 terminal B and injector driver module terminal 1A • Short to ground between fuel injector No.3 terminal A and injector driver module terminal 1C • PCM malfunction

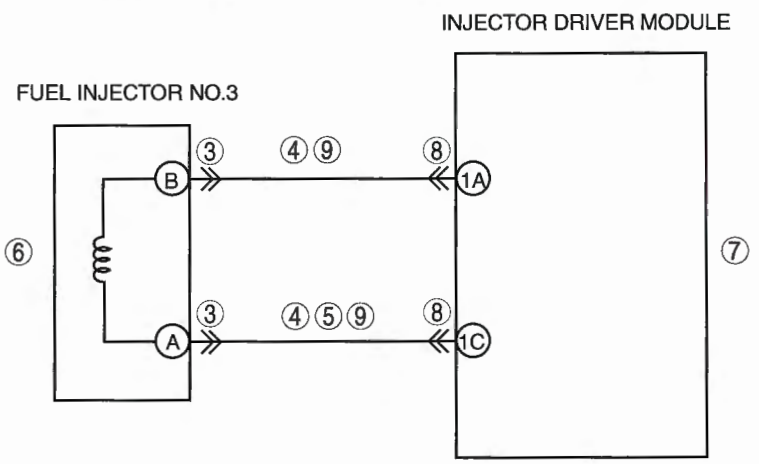

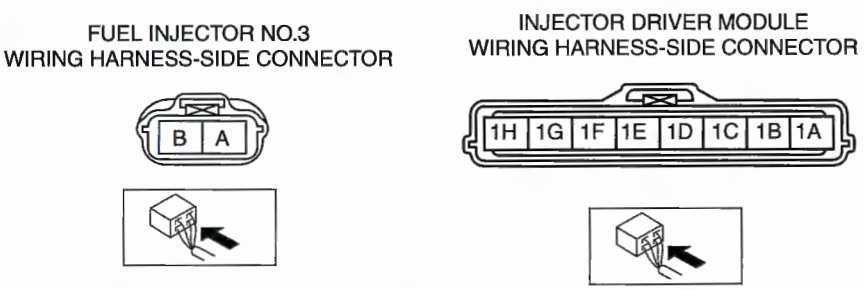

Diagnostic procedure

STEP	INSPECTION		ACTION
1	**VERIFY FREEZE FRAME DATA HAS BEEN RECORDED** • Has the FREEZE FRAME DATA been recorded?	Yes	Go to the next step.
		No	Record the FREEZE FRAME DATA on the repair order, then go to the next step.
2	**VERIFY RELATED REPAIR INFORMATION AVAILABILITY** • Verify related Service Bulletins and/or on-line repair information availability. • Is any related repair information available?	Yes	Perform the repair or diagnosis according to the available repair information. • If the vehicle is not repaired, go to the next step.
		No	Go to the next step.

STEP	INSPECTION		ACTION
3	**INSPECT FUEL INJECTOR NO.3 CONNECTOR FOR POOR CONNECTION** • Turn the ignition switch off. • Disconnect the fuel injector No.3 connector. • Inspect for poor connection (such as damaged/ pulled-out pins, corrosion). • Is there any malfunction?	Yes	Repair or replace the terminal, then go to Step 10.
		No	Go to the next step.
4	**INSPECT FUEL INJECTOR NO.3 CIRCUIT FOR SHORT TO GROUND** • Turn the ignition switch off. • Inspect for continuity between the following terminals: — Fuel injector No.3 terminal B (wiring harness-side) and body ground — Fuel injector No.3 terminal A (wiring harness-side) and body ground • Is there continuity?	Yes	Repair or replace the wiring harness for a possible short to ground, then go to Step 10.
		No	Go to the next step.
5	**INSPECT FUEL INJECTOR NO.3 CIRCUIT FOR SHORT TO POWER SUPPLY** • Turn the ignition switch to the ON position (Engine off). • Measure the voltage between the fuel injector No.3 terminal A (wiring harness-side) and body ground. • Is the voltage **B+**?	Yes	Repair or replace the wiring harness for a possible short to power supply, then go to Step 10.
		No	Go to the next step.
6	**INSPECT FUEL INJECTOR NO.3** • Inspect fuel injector No.3. (See 01–14B–29 FUEL INJECTOR INSPECTION [L3 WITH TC].) • Is there any malfunction?	Yes	Replace fuel injector No.3, then go to Step 10. (See 01–14B–25 FUEL INJECTOR REMOVAL/ INSTALLATION [L3 WITH TC].)
		No	Go to the next step.
7	**INSPECT INJECTOR DRIVER MODULE** • Inspect the injector driver module. (See 01–40B–21 INJECTOR DRIVER MODULE INSPECTION [L3 WITH TC].) • Is there malfunction?	Yes	Replace the injector driver module, then go to Step 10. (See 01–40B–21 INJECTOR DRIVER MODULE REMOVAL/INSTALLATION [L3 WITH TC].)
		No	Go to the next step.
8	**INSPECT PCM CONNECTOR FOR POOR CONNECTION** • Turn the ignition switch off. • Disconnect the PCM connector. • Inspect for poor connection (such as damaged/ pulled-out pins, corrosion). • Is there any malfunction?	Yes	Repair or replace the terminal, then go to Step 10.
		No	Go to the next step.
9	**INSPECT FUEL INJECTOR NO.3 CIRCUIT FOR OPEN CIRCUIT** • Turn the ignition switch off. • Inspect for continuity between the following terminals: — Fuel injector No.3 terminal B (wiring harness-side) and PCM terminal 1A (wiring harness-side) — Fuel injector No.3 terminal A (wiring harness-side) and PCM terminal 1C (wiring harness-side) • Is there continuity?	Yes	Go to the next step.
		No	Repair or replace the wiring harness for a possible open circuit, then go to the next step.
10	**VERIFY TROUBLESHOOTING OF DTC P0203 COMPLETED** • Make sure to reconnect all disconnected connectors. • Turn the ignition switch to the ON position. • Clear the DTC from the PCM memory using the WDS or equivalent. • Start the engine. • Is the same DTC present?	Yes	Replace the PCM, then go to the next step. (See 01–40B–6 PCM REMOVAL/INSTALLATION [L3 WITH TC].)
		No	Go to the next step.
11	**VERIFY AFTER REPAIR PROCEDURE** • Perform "AFTER REPAIR PROCEDURE". (See 01–02B–8 AFTER REPAIR PROCEDURE [L3 WITH TC].) • Are any DTCs present?	Yes	Go to the applicable DTC inspection. (See 01–02B–14 DTC TABLE [L3 WITH TC].)
		No	DTC troubleshooting completed.

DTC P0204 [L3 WITH TC]

E6U010200200W06

DTC P0204	Injector circuit/open cylinder No.4
DETECTION CONDITION	• If the fuel injection verification signal is not input at **255 times** continuously even though the PCM drives fuel injector No.4, the PCM determines that there is an open circuit in the fuel injector No.4 control circuit. **MONITORING CONDITION** — The following conditions are met: • Engine speed: **4,000 rpm or less** • Battery voltage: **10.03 V or more** • Fuel injection control: except during fuel cut **Diagnostic support note** • This is a continuous monitor (CCM). • The MIL illuminates if the PCM detects the above malfunction condition during first drive cycle. • FREEZE FRAME DATA is available. • DTCs are stored in the PCM memory.
POSSIBLE CAUSE	• Fuel injector No.4 malfunction • Injector driver module malfunction • Connector or terminal malfunction • Open circuit between fuel injector No.4 terminal B and injector driver module terminal 1F • Open circuit between fuel injector No.4 terminal A and injector driver module terminal 1D • Short to power supply between fuel injector No.4 terminal A and injector driver module terminal 1D • Short to ground between fuel injector No.4 terminal B and injector driver module terminal 1F • Short to ground between fuel injector No.4 terminal A and injector driver module terminal 1D • PCM malfunction

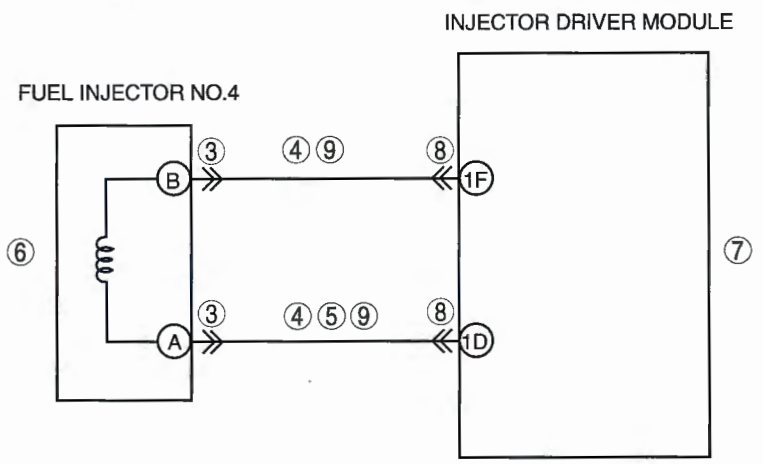

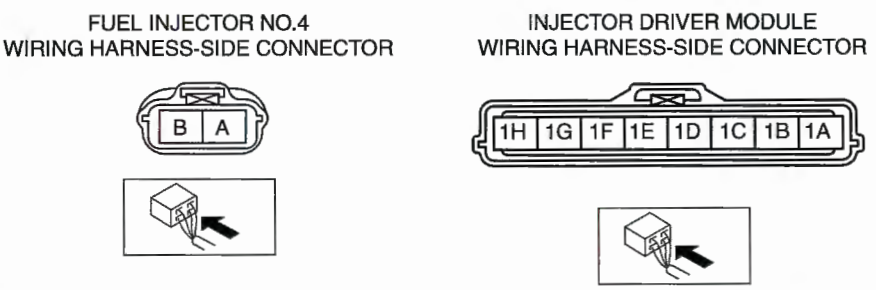

Diagnostic procedure

STEP	INSPECTION		ACTION
1	**VERIFY FREEZE FRAME DATA HAS BEEN RECORDED** • Has the FREEZE FRAME DATA been recorded?	Yes	Go to the next step.
		No	Record the FREEZE FRAME DATA on the repair order, then go to the next step.
2	**VERIFY RELATED REPAIR INFORMATION AVAILABILITY** • Verify related Service Bulletins and/or on-line repair information availability. • Is any related repair information available?	Yes	Perform the repair or diagnosis according to the available repair information. • If the vehicle is not repaired, go to the next step.
		No	Go to the next step.

STEP	INSPECTION		ACTION
3	**INSPECT FUEL INJECTOR NO.4 CONNECTOR FOR POOR CONNECTION** • Turn the ignition switch off. • Disconnect the fuel injector No.4 connector. • Inspect for poor connection (such as damaged/ pulled-out pins, corrosion). • Is there any malfunction?	Yes	Repair or replace the terminal, then go to Step 10.
		No	Go to the next step.
4	**INSPECT FUEL INJECTOR NO.4 CIRCUIT FOR SHORT TO GROUND** • Turn the ignition switch off. • Inspect for continuity between the following terminals: — Fuel injector No.4 terminal B (wiring harness-side) and body ground — Fuel injector No.4 terminal A (wiring harness-side) and body ground • Is there continuity?	Yes	Repair or replace the wiring harness for a possible short to ground, then go to Step 10.
		No	Go to the next step.
5	**INSPECT FUEL INJECTOR NO.4 CIRCUIT FOR SHORT TO POWER SUPPLY** • Turn the ignition switch to the ON position (Engine off). • Measure the voltage between the fuel injector No.4 terminal A (wiring harness-side) and body ground. • Is the voltage **B+**?	Yes	Repair or replace the wiring harness for a possible short to power supply, then go to Step 10.
		No	Go to the next step.
6	**INSPECT FUEL INJECTOR NO.4** • Inspect fuel injector No.4. (See 01–14B–29 FUEL INJECTOR INSPECTION [L3 WITH TC].) • Is there any malfunction?	Yes	Replace fuel injector No.4, then go to Step 10. (See 01–14B–25 FUEL INJECTOR REMOVAL/ INSTALLATION [L3 WITH TC].)
		No	Go to the next step.
7	**INSPECT INJECTOR DRIVER MODULE** • Inspect the injector driver module. (See 01–40B–21 INJECTOR DRIVER MODULE INSPECTION [L3 WITH TC].) • Is there any malfunction?	Yes	Replace the injector driver module, then go to Step 10. (See 01–40B–21 INJECTOR DRIVER MODULE REMOVAL/INSTALLATION [L3 WITH TC].)
		No	Go to the next step.
8	**INSPECT PCM CONNECTOR FOR POOR CONNECTION** • Turn the ignition switch off. • Disconnect the PCM connector. • Inspect for poor connection (such as damaged/ pulled-out pins, corrosion). • Is there any malfunction?	Yes	Repair or replace the terminal, then go to Step 10.
		No	Go to the next step.
9	**INSPECT FUEL INJECTOR NO.4 CIRCUIT FOR OPEN CIRCUIT** • Turn the ignition switch off. • Inspect for continuity between the following terminals: — Fuel injector No.4 terminal B (wiring harness-side) and PCM terminal 1F (wiring harness-side) — Fuel injector No.4 terminal A (wiring harness-side) and PCM terminal 1D (wiring harness-side) • Is there continuity?	Yes	Go to the next step.
		No	Repair or replace the wiring harness for a possible open circuit, then go to the next step.
10	**VERIFY TROUBLESHOOTING OF DTC P0204 COMPLETED** • Make sure to reconnect all disconnected connectors. • Turn the ignition switch to the ON position. • Clear the DTC from the PCM memory using the WDS or equivalent. • Start the engine. • Is the same DTC present?	Yes	Replace the PCM, then go to the next step. (See 01–40B–6 PCM REMOVAL/INSTALLATION [L3 WITH TC].)
		No	Go to the next step.
11	**VERIFY AFTER REPAIR PROCEDURE** • Perform "AFTER REPAIR PROCEDURE". (See 01–02B–8 AFTER REPAIR PROCEDURE [L3 WITH TC].) • Are any DTCs present?	Yes	Go to the applicable DTC inspection. (See 01–02B–14 DTC TABLE [L3 WITH TC].)
		No	DTC troubleshooting completed.

DTC P0222 [L3 WITH TC]

E6U010200200W07

DTC P0222	TP sensor No.2 circuit low input
DETECTION CONDITION	• If PCM detects that the TP sensor No.2 voltage is **below 0.2 V** after the ignition switch to the ON position the PCM determines that TP circuit has a malfunction. **Diagnostic support note** • This is a continuous monitor (CCM). • MIL illuminates if the PCM detects the above malfunction conditions in first drive cycles. • FREEZE FRAME DATA is available. • DTCs are stored in the PCM memory.
POSSIBLE CAUSE	• TP sensor malfunction • Connector or terminal malfunction • Open circuit between throttle body terminal C and PCM terminal 3J • Short to ground between throttle body terminal C and PCM terminal 3J • Open circuit between throttle body terminal B and PCM terminal 3P • Short to ground between throttle body terminal B and PCM terminal 3P • PCM malfunction

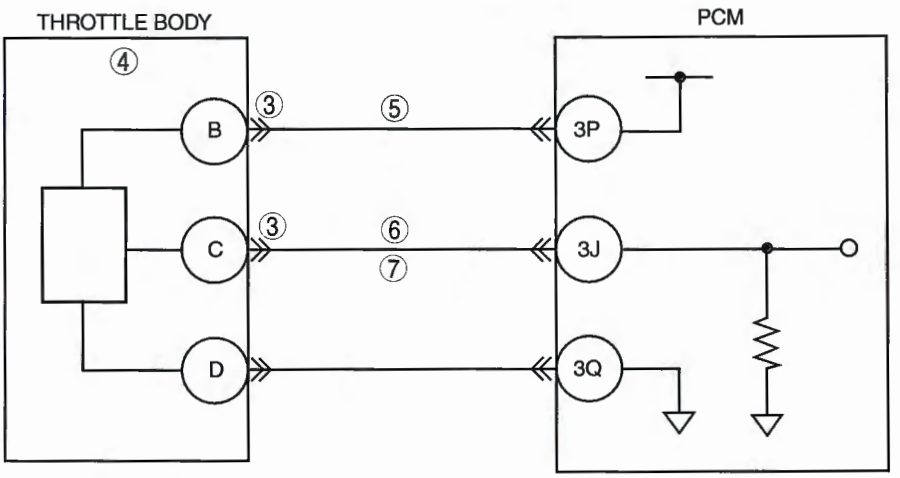

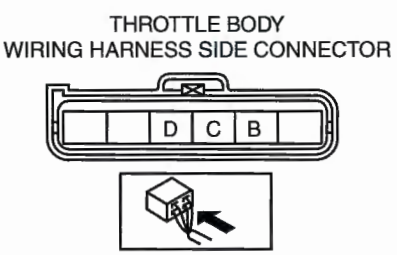

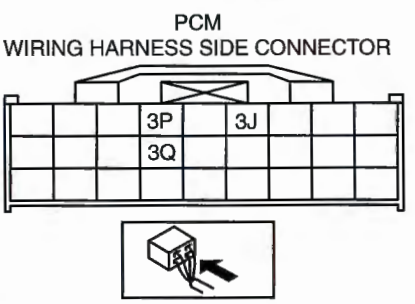

Diagnostic procedure

STEP	INSPECTION		ACTION
1	**VERIFY FREEZE FRAME DATA HAS BEEN RECORDED** • Has the FREEZE FRAME DATA been recorded?	Yes	Go to the next step.
		No	Record FREEZE FRAME DATA on repair order, then go to the next step.
2	**VERIFY RELATED REPAIR INFORMATION AVAILABILITY** • Check for related Service Bulletins and/or on-line repair information availability. • Is any related repair information available?	Yes	Perform the repair or diagnosis according to the available repair information. • If the vehicle is not repaired, go to the next step.
		No	Go to the next step.
3	**CLASSIFY TP SENSOR OR HARNESS MALFUNCTION** • Connect the WDS or equivalent. • Access the TP2 PID. • Disconnect the throttle body connector. • Connect a jumper wire between throttle body terminals B and C (harness-side). • Is the voltage **above 4.9 V**?	Yes	Go to the next step.
		No	Go to step 5.
4	**INSPECT TP SENSOR** • Perform the TP sensor inspection. (See 01–40B–27 THROTTLE POSITION (TP) SENSOR INSPECTION [L3 WITH TC].) • Is the TP sensor normal?	Yes	Inspect throttle body connector terminal B connection for poor connection. Repair or replace if necessary, then go to Step 8.
		No	Replace throttle body, then go to Step 8.
5	**INSPECT POWER SUPPLY CIRCUIT VOLTAGE AT THROTTLE BODY CONNECTOR** **Note** • If DTC P0107 and P2228 are also retrieved with P0122, go to the CONSTANT VOLTAGE troubleshooting procedure. • Turn ignition switch to the ON position (Engine off). • Measure the voltage at throttle body terminal B (harness-side). • Is the voltage **within 4.5—5.5 V**?	Yes	Go to the next step.
		No	Repair or replace for an open circuit between throttle body connector terminal B and PCM connector terminal 3P (harness-side). Then, then go to Step 8.
6	**VERIFY TP2 SIGNAL CIRCUIT FOR OPEN CIRCUIT** • Turn the ignition switch off. • Inspect for continuity between throttle body terminal C (harness-side) and PCM terminal 3J. • Is there continuity?	Yes	Go to the next step.
		No	Repair or replace the suspected wiring harness, then go to Step 8.
7	**VERIFY TP2 SIGNAL CIRCUIT FOR SHORT TO GROUND** • Inspect for continuity between throttle body terminal C (harness-side) and body ground. • Is there continuity?	Yes	Repair or replace the suspected wiring harness, then go to the next step.
		No	Go to the next step.
8	**VERIFY TROUBLESHOOTING OF DTC P0222 COMPLETED** • Make sure to reconnect all disconnected connectors. • Turn ignition switch to the ON position (Engine off). • Clear the DTC from the PCM memory using the WDS or equivalent. • Start the engine and warm it up completely. • Is same DTC present?	Yes	Replace the PCM, then go to the next step. (See 01–40B–6 PCM REMOVAL/INSTALLATION [L3 WITH TC].)
		No	Go to the next step.
9	**VERIFY AFTER REPAIR PROCEDURE** • Perform the "After Repair Procedure". (See 01–02B–8 AFTER REPAIR PROCEDURE [L3 WITH TC].) • Are any DTCs present?	Yes	Go to the applicable DTC inspection. (See 01–02B–14 DTC TABLE [L3 WITH TC].)
		No	Troubleshooting completed.

DTC P0223 [L3 WITH TC]

E6U010200200W08

DTC P0223	TP sensor No.2 circuit high input
DETECTION CONDITION	• If the PCM detects that the TP sensor No.2 voltage is **above 4.85 V** after the ignition switch to the ON position, the PCM determines that the TP circuit has a malfunction. **Diagnostic support note** • This is a continuous monitor (CCM). • MIL illuminates if the PCM detects the above malfunction conditions in first drive cycles. • FREEZE FRAME DATA is available. • DTCs are stored in the PCM memory.
POSSIBLE CAUSE	• TP sensor malfunction • Connector or terminal malfunction • Open circuit between throttle body terminal D and PCM terminal 3Q • Short to constant voltage supply between throttle body terminal C and PCM terminal 3J • PCM malfunction

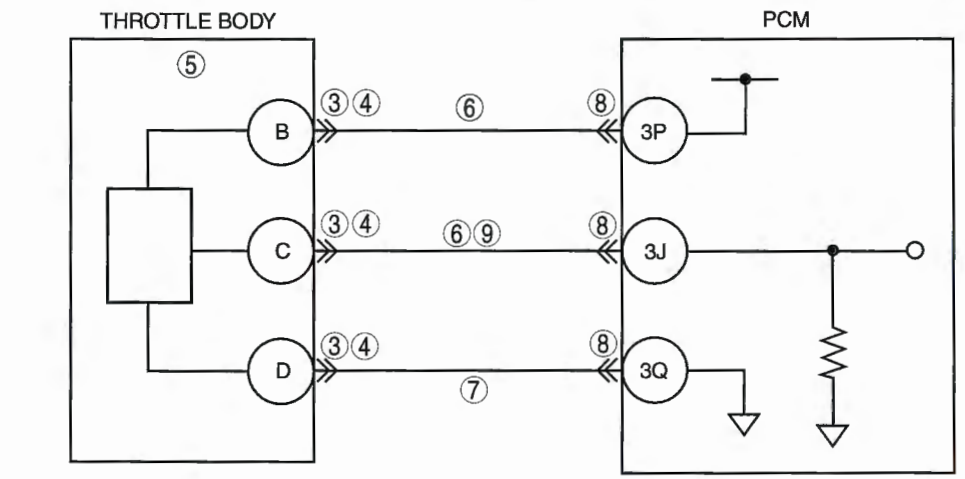

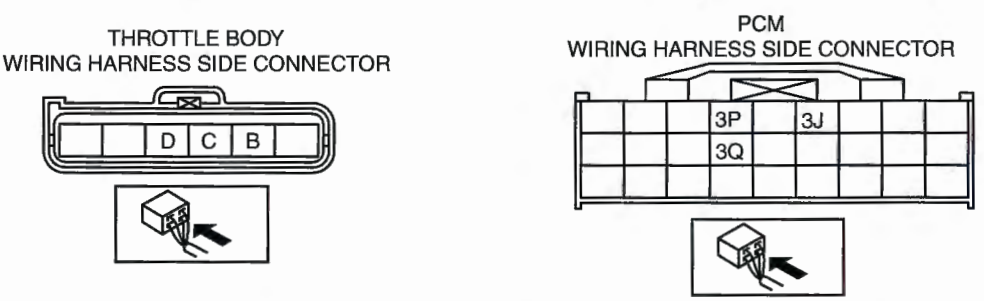

Diagnostic procedure

STEP	INSPECTION		ACTION
1	**VERIFY FREEZE FRAME DATA HAS BEEN RECORDED** • Has the FREEZE FRAME DATA been recorded?	Yes	Go to the next step.
		No	Record FREEZE FRAME DATA on the repair order, then go to the next step.
2	**VERIFY RELATED REPAIR INFORMATION AVAILABILITY** • Check for related Service Bulletins and/or on-line repair information availability. • Is any related repair information available?	Yes	Perform the repair or diagnosis according to the available repair information. • If the vehicle is not repaired, go to the next step.
		No	Go to the next step.
3	**INSPECT THROTTLE BODY CONNECTOR** • Turn the ignition switch off. • Verify that the throttle body connector is connected securely. • Is the connector normal?	Yes	Go to the next step.
		No	Connect the connector securely, then go to Step 10.
4	**INSPECT THROTTLE BODY CONNECTOR FOR POOR CONNECTION** • Disconnect the throttle body connector. • Inspect for poor connection (such as damaged/ pulled-out pins, corrosion). • Is there any malfunction?	Yes	Repair or replace the suspected terminal, then go to Step 10.
		No	Go to the next step.
5	**INSPECT TP SENSOR** • Perform the TP sensor inspection. (See 01–40B–27 THROTTLE POSITION (TP) SENSOR INSPECTION [L3 WITH TC]) • Is the TP sensor normal?	Yes	Go to the next step.
		No	Replace the throttle body, then go to Step 10.
6	**INSPECT TP2 SIGNAL CIRCUIT FOR SHORT TO POWER SUPPLY** • Turn ignition switch to the ON position (Engine off). • Measure the voltage between throttle body terminal C (harness-side) and body ground. • Is the voltage **above 4.9 V**?	Yes	Repair or replace for a short to a power supply. Then, go to Step 10.
		No	Go to the next step.
7	**VERIFY TP SENSOR GROUND CIRCUIT FOR OPEN CIRCUIT** • Inspect for continuity between throttle body connector terminal D (harness-side) and body ground. • Is there continuity?	Yes	Repair or replace for an open circuit between throttle body terminal D (harness-side) and PCM connector terminal 3Q (harness-side). Then, go to Step 10.
		No	Go to the next step.
8	**INSPECT PCM CONNECTOR** • Disconnect the PCM connector. • Inspect for poor connection (such as damaged/ pulled-out pins, corrosion). • Is there any malfunction?	Yes	Repair terminal, then go to Step 10.
		No	Go to Step 10.
9	**VERIFY TP SIGNAL CIRCUIT FOR SHORT TO CONSTANT VOLTAGE CIRCUIT** • Inspect for continuity between throttle body terminals B and C (harness-side). • Is there continuity?	Yes	Repair or replace the suspected wiring harness, then go to the next step.
		No	Go to the next step.
10	**VERIFY TROUBLESHOOTING OF DTC P0223 COMPLETED** • Make sure to reconnect all disconnected connectors. • Turn ignition switch to the ON position (Engine off). • Clear the DTC from the PCM memory using the WDS or equivalent. • Start the engine and warm it up completely. • Is same DTC present?	Yes	Replace PCM, then go to the next step. (See 01–40B–6 PCM REMOVAL/INSTALLATION [L3 WITH TC].)
		No	Go to the next step.
1	**VERIFY AFTER REPAIR PROCEDURE** • Perform the "After Repair Procedure". (See 01–02B–8 AFTER REPAIR PROCEDURE [L3 WITH TC].) • Are any DTCs present?	Yes	Go to the applicable DTC inspection. (See 01–02B–14 DTC TABLE [L3 WITH TC].)
		No	Troubleshooting completed.

DTC P0234 [L3 WITH TC]

E6U010200200W09

DTC P0234	Turbo/supercharger overboost condition
DETECTION CONDITION	• If the manifold absolute pressure or charging efficiency are more than the specification for the specified period of time, the PCM determines that the turbocharger is in an overboost condition. **MONITORING CONDITIONS** — Engine speed is **2,000 rpm or more.** **Diagnostic support note** • This is a continuous monitor (Other). • The MIL does not illuminate. • FREEZE FRAME DATA is not available. • DTCs are stored in the PCM memory.
POSSIBLE CAUSE	• Wastegate control solenoid valve malfunction • Vacuum hose looseness or damage • Improper installation of the vacuum hose

Diagnostic procedure

STEP	INSPECTION		ACTION
1	**VERIFY FREEZE FRAME DATA HAS BEEN RECORDED** • Has the FREEZE FRAME DATA been recorded?	Yes	Go to the next step.
		No	Record the FREEZE FRAME DATA on the repair order, then go to the next step.
2	**VERIFY RELATED REPAIR INFORMATION AVAILABILITY** • Verify related service Bulletins and/or on-line repair information availability. • Is any related repair information available?	Yes	Perform repair or diagnosis according to the available repair information. • If the vehicle is not repaired, go to the next step.
		No	Go to the next step.
3	**INSPECT WASTEGATE CONTROL SOLENOID VALVE** • Inspect the wastegate control solenoid valve. (See 01–13B–14 WASTEGATE CONTROL SOLENOID VALVE INSPECTION [L3 WITH TC].) • Is there any malfunction?	Yes	Replace the wastegate control solenoid valve, then go to Step 5. (See 01–13B–4 INTAKE AIR SYSTEM REMOVAL/ INSTALLATION [L3 WITH TC].)
		No	Go to the next step.
4	**INSPECT VACUUM HOSE** • Inspect the vacuum hose condition for the following: — Looseness — Damage — Improper installation • Is there any malfunction?	Yes	Repair or replace the suspected part, then go to the next step.
		No	Go to the next step.
5	**VERIFY TROUBLESHOOTING OF DTC P0234 COMPLETED** • Make sure to reconnect all the disconnected connectors. • Clear the DTC from the PCM memory using the WDS or equivalent. • Start the engine. • Is the same DTC present?	Yes	Replace the PCM, then go to the next step. (See 01–40B–6 PCM REMOVAL/INSTALLATION [L3 WITH TC].)
		No	Go to the next step.
6	**VERIFY AFTER REPAIR PROCEDURE** • Perform the "AFTER REPAIR PROCEDURE". (See 01–02B–8 AFTER REPAIR PROCEDURE [L3 WITH TC].) • Are any DTCs present?	Yes	Go to the applicable DTC troubleshooting. (See 01–02B–14 DTC TABLE [L3 WITH TC].)
		No	DTC troubleshooting completed.

DTC P0245 [L3 WITH TC]

E6U010200200W10

DTC P0245	Turbocharger wastegate solenoid low
DETECTION CONDITION	• When the PCM turns the wastegate control solenoid valve off but the wastegate control solenoid valve circuit voltage is low, the PCM determines that the wastegate control solenoid valve control circuit voltage is low. **Diagnostic support note** • This is a continuous monitor (Other). • The MIL does not illuminate. • PENDING CODE is available if the PCM detects the above malfunction condition during first drive cycle. • FREEZE FRAME DATA is not available. • DTCs are stored in the PCM memory.
POSSIBLE CAUSE	• Wastegate control solenoid valve malfunction • Connector or terminal malfunction • Open circuit in the wiring harness between wastegate control solenoid valve terminal A and main relay • Open circuit in the wiring harness between wastegate control solenoid valve terminal B and PCM terminal 4H • Short to ground in the wiring harness between wastegate control solenoid valve terminal B and PCM terminal 4H • PCM malfunction

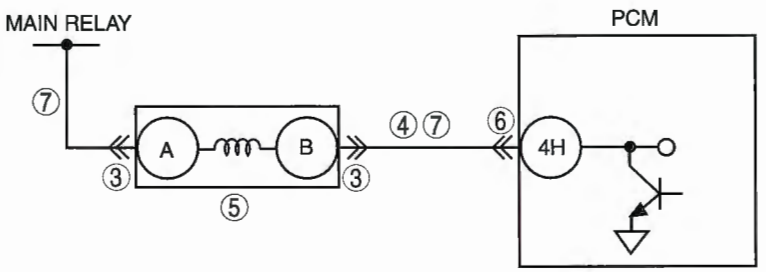

WASTEGATE CONTROL SOLENOID VALVE WIRING HARNESS-SIDE CONNECTOR

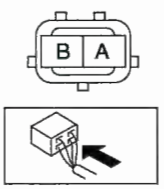

PCM WIRING HARNESS-SIDE CONNECTOR

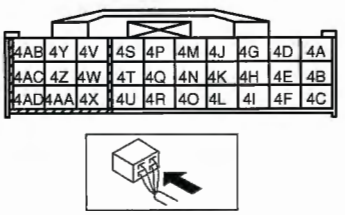

Diagnostic procedure

STEP	INSPECTION		ACTION
1	**VERIFY FREEZE FRAME DATA HAS BEEN RECORDED** • Has the FREEZE FRAME DATA been recorded?	Yes	Go to the next step.
		No	Record the FREEZE FRAME DATA on the repair order, then go to the next step.
2	**VERIFY RELATED REPAIR INFORMATION AVAILABILITY** • Verify related service Bulletins and/or on-line repair information availability. • Is any related repair information available?	Yes	Perform repair or diagnosis according to the available repair information. • If the vehicle is not repaired, go to the next step.
		No	Go to the next step.
3	**INSPECT WASTEGATE CONTROL SOLENOID VALVE CONNECTOR FOR POOR CONNECTION** • Turn the ignition switch off. • Disconnect the wastegate control solenoid valve connector. • Inspect for poor connection (such as damaged/ pulled-out pins, corrosion). • Is there any malfunction?	Yes	Repair or replace the terminal, then go to Step 8.
		No	Go to the next step.

STEP	INSPECTION		ACTION
4	**INSPECT WASTEGATE CONTROL SOLENOID VALVE CIRCUIT FOR SHORT TO GROUND** • Turn the ignition switch off. • Inspect for continuity between the wastegate control solenoid valve terminal B and body ground. • Is there continuity?	Yes	Repair or replace the wiring harness for a possible short to ground, then go to Step 8.
		No	Go to the next step.
5	**INSPECT WASTEGATE CONTROL SOLENOID VALVE** • Inspect the wastegate control solenoid valve. (See 01–13B–14 WASTEGATE CONTROL SOLENOID VALVE INSPECTION [L3 WITH TC].) • Is there any malfunction?	Yes	Replace the wastegate control solenoid valve, then go to Step 8. (See 01–13B–4 INTAKE AIR SYSTEM REMOVAL/ INSTALLATION [L3 WITH TC].)
		No	Go to the next step.
6	**INSPECT PCM CONNECTOR FOR POOR CONNECTION** • Turn the ignition switch off. • Disconnect the PCM connector. • Inspect for poor connection (such as damaged/ pulled-out pins, corrosion). • Is there any malfunction?	Yes	Repair or replace the terminal, then go to Step 8.
		No	Go to the next step.
7	**INSPECT WASTEGATE CONTROL SOLENOID VALVE GROUND CIRCUIT FOR OPEN CIRCUIT** • Turn the ignition switch off. • Inspect for continuity between the following terminals: — Wastegate control solenoid valve terminal A (wiring harness-side) and main relay — Wastegate control solenoid valve terminal B (wiring harness-side) and PCM terminal 4H (wiring harness-side) • Is there continuity?	Yes	Go to the next step.
		No	Repair or replace the wiring harness for an open circuit, then go to the next step.
8	**VERIFY TROUBLESHOOTING OF DTC P0245 COMPLETED** • Make sure to reconnect all disconnected connectors. • Clear the DTC from the PCM memory using the WDS or equivalent. • Start the engine. • Is the same DTC present?	Yes	Replace the PCM, then go to the next step. (See 01–40B–6 PCM REMOVAL/INSTALLATION [L3 WITH TC].)
		No	Go to the next step.
9	**VERIFY AFTER REPAIR PROCEDURE** • Perform the "AFTER REPAIR PROCEDURE". (See 01–02B–8 AFTER REPAIR PROCEDURE [L3 WITH TC].) • Are any DTCs present?	Yes	Go to the applicable DTC troubleshooting. (See 01–02B–14 DTC TABLE [L3 WITH TC].)
		No	DTC troubleshooting completed.

DTC P0246 [L3 WITH TC]

E6U010200200W11

DTC P0246	Turbocharger wastegate solenoid high
DETECTION CONDITION	• When the PCM turns the wastegate control solenoid valve on but the wastegate control solenoid valve circuit voltage is high, the PCM determines that the wastegate control solenoid valve control circuit voltage is high. **Diagnostic support note** • This is a continuous monitor (Other). • The MIL does not illuminate. • PENDING CODE is available if the PCM detects the above malfunction condition during first drive cycle. • FREEZE FRAME DATA is not available. • DTCs are stored in the PCM memory.
POSSIBLE CAUSE	• Wastegate control solenoid valve malfunction • Connector or terminal malfunction • Short to power supply in the wiring harness between wastegate control solenoid valve terminal B and PCM terminal 4H • PCM malfunction

DTC P0246	Turbocharger wastegate solenoid high

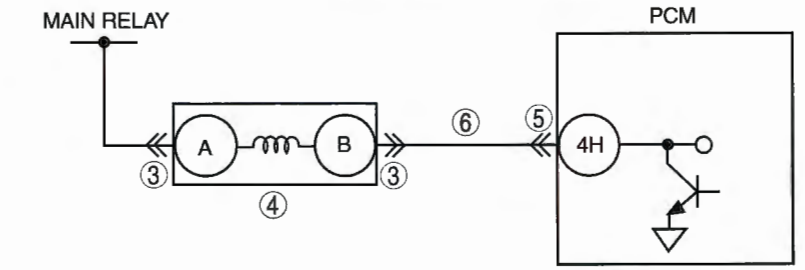

WASTEGATE CONTROL SOLENOID VALVE WIRING HARNESS-SIDE CONNECTOR

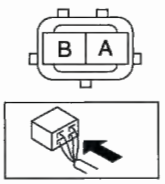

PCM WIRING HARNESS-SIDE CONNECTOR

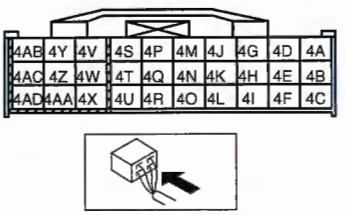

Diagnostic procedure

STEP	INSPECTION		ACTION
1	**VERIFY FREEZE FRAME DATA HAS BEEN RECORDED** • Has the FREEZE FRAME DATA been recorded?	Yes	Go to the next step.
		No	Record the FREEZE FRAME DATA on the repair order, then go to the next step.
2	**VERIFY RELATED REPAIR INFORMATION AVAILABILITY** • Check for related Service Bulletins and/or on-line repair information availability. • Is any related repair information available?	Yes	Perform repair or diagnosis according to the available repair information. • If the vehicle is not repaired, go to the next step.
		No	Go to the next step.
3	**INSPECT WASTEGATE CONTROL SOLENOID VALVE CONNECTOR FOR POOR CONNECTION** • Turn the ignition switch off. • Disconnect the wastegate control solenoid valve connector. • Inspect for poor connection (such as damaged/ pulled-out pins, corrosion). • Is there any malfunction?	Yes	Repair or replace the terminal, then go to Step 7.
		No	Go to the next step.
4	**INSPECT WASTEGATE CONTROL SOLENOID VALVE** • Inspect the wastegate control solenoid valve. (See 01–13B–14 WASTEGATE CONTROL SOLENOID VALVE INSPECTION [L3 WITH TC].) • Is there any malfunction?	Yes	Replace the wastegate control solenoid valve, then go to Step 7. (See 01–13B–4 INTAKE AIR SYSTEM REMOVAL/ INSTALLATION [L3 WITH TC].)
		No	Go to the next step.
5	**INSPECT PCM CONNECTOR FOR POOR CONNECTION** • Turn the ignition switch off. • Disconnect the PCM connector. • Inspect for poor connection (such as damaged/ pulled-out pins, corrosion). • Is there any malfunction?	Yes	Repair or replace the terminal, then go to Step 7.
		No	Go to the next step.
6	**INSPECT WASTEGATE CONTROL SOLENOID VALVE CONTROL CIRCUIT FOR SHORT TO POWER SUPPLY** • Turn the ignition switch to the ON position. • Inspect for continuity between the wastegate control solenoid valve terminal B (wiring harness-side) and body ground. • Is the voltage **B+**?	Yes	Repair or replace the wiring harness for a possible short to power supply, then go to the next step.
		No	Go to the next step.

STEP	INSPECTION		ACTION
7	**VERIFY TROUBLESHOOTING OF DTC P0246 COMPLETED** • Make sure to reconnect all disconnected connectors. • Clear the DTC from the PCM memory using the WDS or equivalent. • Start the engine. • Is the same DTC present?	Yes	Replace the PCM, then go to the next step. (See 01–40B–6 PCM REMOVAL/INSTALLATION [L3 WITH TC].)
		No	Go to the next step.
8	**VERIFY AFTER REPAIR PROCEDURE** • Perform the "AFTER REPAIR PROCEDURE". (See 01–02B–8 AFTER REPAIR PROCEDURE [L3 WITH TC].) • Are any DTCs present?	Yes	Go to the applicable DTC troubleshooting. (See 01–02B–14 DTC TABLE [L3 WITH TC].)
		No	DTC troubleshooting completed.

DTC P0300 [L3 WITH TC]

E6U010200300W10

DTC P0300	Random misfire detected
DETECTION CONDITION	• The PCM monitors the CKP sensor input signal interval time. The PCM calculates the change of interval time for each cylinder. If the change of interval time exceeds the preprogrammed criteria, the PCM detects a misfire in the corresponding cylinder. While the engine is running, the PCM counts the number of misfires that occurred at **200 crankshaft revolutions** and **1,000 crankshaft revolutions** and calculates a misfire ratio for each crankshaft revolution. If the ratio exceeds the preprogrammed criteria, the PCM determines that a misfire, which can damage the catalytic converter or affect emission performance, has occurred. **Diagnostic support note** • This is a continuous monitor (Misfire). • MIL illuminates if the PCM detects a misfire which affects emission performance in two consecutive drive cycles or in one drive cycle while the DTC for the same malfunction has been stored in the PCM. • The MIL flashes if the PCM detects a misfire which can damage the catalytic converter during the first drive cycle. • PENDING CODE is available if the PCM detects a misfire which affects emission performance during the first drive cycle. • FREEZE FRAME DATA is available. • DTC is stored in the PCM memory.
POSSIBLE CAUSE	• CKP sensor malfunction • CMP sensor malfunction • Ignition coil malfunction • Ignition system malfunction • MAF sensor contamination • Excess air suction in intake air system (between MAF sensor and intake manifold) • Fuel pump malfunction • High pressure fuel pump malfunction • Relief valve (built-in fuel delivery pipe) malfunction • Spill valve control solenoid valve (built-in high pressure fuel pump) malfunction • Improper fuel pump speed control operation • Fuel pressure regulator (built-in fuel pump unit) malfunction • Fuel line clogged • Fuel filter clogged • Fuel leakage in fuel line • Fuel runout • Poor quality fuel • Purge control solenoid valve malfunction • PCV valve malfunction • EGR valve malfunction • Vacuum hoses damage or improper connection • Related connector and terminal malfunction • Related wiring harness malfunction • Insufficient compression • Variable valve timing control system improper • Injector driver module malfunction

Diagnostic procedure

STEP	INSPECTION		ACTION
1	**VERIFY FREEZE FRAME DATA AND DIAGNOSTIC MONITORING TEST RESULTS HAVE BEEN RECORDED** • Have the FREEZE FRAME DATA and DIAGNOSTIC MONITORING TEST RESULTS (Misfire related) been recorded?	Yes	Go to the next step.
		No	Record the FREEZE FRAME DATA and DIAGNOSTIC MONITORING TEST RESULTS on the repair order, then go to the next step.
2	**VERIFY RELATED REPAIR INFORMATION AVAILABILITY** • Verify related Service Bulletins and/or on-line repair information availability. • Is any related repair information available?	Yes	Perform the repair or diagnosis according to the available repair information. • If the vehicle is not repaired, go to the next step.
		No	Go to the next step.
3	**VERIFY RELATED PENDING CODE OR STORED DTC** • Turn the ignition switch off then to the ON position (Engine off). • Verify related pending code or stored DTCs. • Are other DTCs present?	Yes	Go to the appropriate DTC troubleshooting. (See 01–02B–14 DTC TABLE [L3 WITH TC].)
		No	Go to the next step.
4	**VERIFY CURRENT INPUT SIGNAL STATUS (KEY TO ON/IDLE)** • Access APP1, APP2, ECT, IAT, MAF, RPM, TP, and VSS PIDs using the WDS or equivalent. (See 01–40B–6 PCM INSPECTION [L3 WITH TC].) • Is there any signal that is far out of specification when the ignition switch is turned to the ON position and the engine idles?	Yes	Inspect the suspected circuit and/or part according to the inspection results. (See 01–40B–6 PCM INSPECTION [L3 WITH TC].) Then go to Step 26.
		No	Go to the next step.
5	**VERIFY CURRENT INPUT SIGNAL STATUS UNDER TROUBLE CONDITION** • Inspect the same PIDs as in Step 4 while simulating FREEZE FRAME DATA condition. • Is there any signal which causes drastic changes?	Yes	Inspect the suspected circuit and/or part according to the inspection results. (See 01–40B–6 PCM INSPECTION [L3 WITH TC].) Then go to Step 26.
		No	Go to the next step.
6	**INSPECT CMP SENSOR** • Inspect the CMP sensor. (See 01–40B–36 CAMSHAFT POSITION (CMP) SENSOR INSPECTION [L3 WITH TC].) • Is the CMP sensor normal?	Yes	Go to the next step.
		No	Inspect the installation condition for damage to the timing chain and gears, repair the malfunctioning part. • If it is normal, replace the CMP sensor. Then go to Step 26.
7	**VERIFY CKP SENSOR INSTALLATION CONDITION** • Inspect the CKP sensor for looseness. • Is the CKP sensor loose?	Yes	Retighten the CKP sensor, then go to Step.
		No	Go to the next step.
8	**INSPECT IGNITION COIL HARNESSES** • Inspect the ignition coil related wiring harness condition (intermittent open or short) for all cylinders. • Are wiring harness conditions normal?	Yes	Go to the next step.
		No	Repair the suspected wiring harnesses, then go to Step 26.
9	**INSPECT IGNITION SYSTEM OPERATION** • Carry the out spark test. (See 01–03B–90 Spark Test) • Is a strong blue spark visible at each cylinder?	Yes	Go to the next step.
		No	Repair or replace the malfunctioning part according to the spark test result. Then go to Step 26.
10	**INSPECT MAF PID** • Start the engine. • Access the MAF PID using the WDS or equivalent. • Race the engine and verify that the MAF PID changes quickly according to the change in the engine speed. • Is the MAF PID response normal?	Yes	Go to the next step.
		No	Replace the MAF sensor, then go to Step 26.

STEP	INSPECTION		ACTION
11	**INSPECT IN INTAKE AIR SYSTEM FOR EXCESSIVE AIR SUCTION** • Inspect for air leakage at the following: — Between the MAF sensor and throttle body — Between throttle body and intake manifold • Is there any malfunction?	Yes	Repair or replace suspected part, then go to Step 26.
		No	Go to the next step.
12	**INSPECT FUEL LINE PRESSURE** • Inspect fuel line pressure. (See 01–14B–5 FUEL LINE PRESSURE INSPECTION [L3 WITH TC].) • Is the fuel line pressure normal?	Yes	Go to Step 14.
		No	If the fuel line pressure is too low, go to the next step. If the fuel line pressure is too high, replace the fuel pump unit, then go to Step 26.
13	**INSPECT FUEL LINE FROM FUEL PUMP TO FUEL DELIVERY PIPE** • Visually inspect fuel line for fuel leakage. • Is there any fuel leakage?	Yes	Replace suspected fuel line, then go to Step 20.
		No	Inspect the fuel filters for following: • Foreign material or stain inside fuel filter (low-pressure side) Perform following actions depend on the result above. • If foreign materials or stain is found inside fuel filter (low-pressure side), clean the fuel tank and filter (low-pressure side). • If normal, replace the fuel pump unit. Then, go to Step 26.
14	**INSPECT ENGINE COMPRESSION** • Inspect the engine compression. (See 01–10B–9 COMPRESSION INSPECTION [L3 WITH TC].) • Is it normal?	Yes	Go to the next step.
		No	Perform engine overhaul for repairs, then go to Step 26.
15	**INSPECT VARIABLE VALVE TIMING CONTROL SYSTEM OPERATION** • Inspect variable valve timing control system operation. (See 01–03B–93 Variable Valve Timing Control System Operation Inspection) • Does the variable valve timing control system work properly?	Yes	Go to the next step.
		No	Repair or replace the malfunctioning part according to the variable valve timing control system inspection results, then go to Step 26.
16	**INSPECT OPERATION OF PURGE CONTROL SOLENOID VALVE** • Turn the ignition switch off. • Connect the vacuum pump to the purge control solenoid valve and apply vacuum to the solenoid. • Verify that the solenoid holds vacuum. • Turn the ignition switch to the ON position (Engine off). • Access EVAPCP PID in the SIMULATION TEST using the WDS or equivalent. • Set duty value to **100%** for the EVAPCP PID. • Apply vacuum while turning the solenoid from OFF to ON and simulating the EVAPCP PID with a **100%** duty value. • Verify that the solenoid releases vacuum while the solenoid is turned on. • Is the purge control solenoid valve operation normal?	Yes	Go to the next step.
		No	Replace the purge control solenoid valve, then go to Step 26.
17	**INSPECT PCV VALVE OPERATION** • Turn the ignition switch off. • Remove the PCV valve and inspect the valve operation. (See 01–16B–13 POSITIVE CRANKCASE VENTILATION (PCV) VALVE INSPECTION [L3 WITH TC].) • Is the PCV valve operation normal?	Yes	Replace the PCV valve, then go to Step 26.
		No	Go to the next step.
18	**INSPECT OPERATION OF EGR VALVE** • Remove the EGR valve. • Visually inspect the if EGR valve is stuck open. • Is the EGR valve stuck open?	Yes	Repair or replace the EGR valve, then go to Step 26.
		No	Go to the next step.

STEP	INSPECTION		ACTION
19	**VERIFY FUEL PUMP SPEED CONTROL OPERATION** • Perform Fuel Pump Speed Control Inspection. (See 01–03B–89 Fuel Pump Speed Control Inspection.) • Does the fuel pump speed control work properly?	Yes	Go to the next step.
		No	Inspect or replace the malfunctioning parts, according to inspection results. Then go to Step 26.
20	**INSPECT FUEL PRESSURE (HIGH-SIDE)** • Access and monitor the FUEL_PRES PID. • Is the FUEL_PRES PID value within the specification? (See 01–40B–6 Using the WDS or Equivalent.)	Yes	Go to Step 24.
		No	Go to the next step.
21	**IDENTIFY CAUSE BY FUEL PRESSURE SENSOR OR HIGH PRESSURE FUEL PUMP** • Is the vehicle accelerate performance normally?	Yes	Go to the next step.
		No	Go to Step 23.
22	**INSPECT FUEL PRESSURE SENSOR** • Inspect the fuel pressure sensor. (See 01–40B–34 FUEL PRESSURE SENSOR INSPECTION [L3 WITH TC].) • Is the fuel pressure sensor normal?	Yes	Go to the next step.
		No	Replace the fuel delivery pipe, then go to Step 26.
23	**INSPECT HIGH PRESSURE FUEL PUMP** • Replace the high pressure fuel pump • Monitor FUEL_PRES PID • Is the FUEL_PRES PID value within the specified? (See 01–40B–6 Using the WDS or Equivalent.)	Yes	Go to Step 26.
		No	Go to the next step.
24	**INSPECT FUEL PRESSURE (LOW-SIDE)** • Connect the fuel pressure gauge between the fuel pump and the high pressure fuel pump. • Measure the low side fuel pressure. (See 01–14B–5 FUEL LINE PRESSURE INSPECTION [L3 WITH TC].) • Is the low side fuel pressure within the specification?	Yes	Go to the next step.
		No	Inspect for the following. • Fuel line restriction • Fuel filter clogging If normal replace the fuel pump.Then go to Step 26.
25	**INSPECT SEALING OF ENGINE COOLANT PASSAGE** • Perform "ENGINE COOLANT LEAKAGE INSPECTION." (See 01–12B–5 ENGINE COOLANT LEAKAGE INSPECTION [L3 WITH TC].) • Is there any malfunction?	Yes	Repair or replace the malfunctioning part according to the inspection results. Then go to the next step.
		No	Go to the next step.
26	**VERIFY TROUBLESHOOTING OF MISFIRE DTC COMPLETED** • Make sure to reconnect all disconnected connectors. • Turn the ignition switch to the ON position (Engine off). • Clear the DTC from the memory using the WDS or equivalent. • Perform the HO2S heater, HO2S, and TWC Repair Verification Drive Mode. (See 01–02B–9 OBD-II DRIVE MODE [L3 WITH TC].) • Is the PENDING CODE for this DTC present?	Yes	Replace the PCM, then go to the next step. (See 01–40B–6 PCM REMOVAL/INSTALLATION [L3 WITH TC].)
		No	Go to the next step.
27	**VERIFY AFTER REPAIR PROCEDURE** • Perform the "AFTER REPAIR PROCEDURE". (See 01–02B–8 AFTER REPAIR PROCEDURE [L3 WITH TC].) • Are any DTCs present?	Yes	Go to the applicable DTC troubleshooting. (See 01–02B–14 DTC TABLE [L3 WITH TC].)
		No	Troubleshooting completed.

DTC P0301, P0302, P0303, P0304 [L3 WITH TC]

E6U010200300W11

DTC P0301 **DTC P0302** **DTC P0303** **DTC P0304**	**Cylinder No.1 misfire detected** **Cylinder No.2 misfire detected** **Cylinder No.3 misfire detected** **Cylinder No.4 misfire detected**
DETECTION CONDITION	• The PCM monitors the CKP sensor input signal interval time. The PCM calculates the change of interval time for each cylinder. If the change of interval time exceeds the preprogrammed criteria, the PCM detects a misfire in the corresponding cylinder. While the engine is running, the PCM counts the number of misfires that occurred at **200 crankshaft revolutions** and **1,000 crankshaft revolutions** and calculates a misfire ratio for each crankshaft revolution. If the ratio exceeds the preprogrammed criteria, the PCM determines that a misfire, which can damage the catalytic converter or affect emission performance, has occurred. **Diagnostic support note** • This is a continuous monitor (Misfire). • The MIL illuminates if the PCM detects a misfire which affects emission performance in two consecutive drive cycles or in one drive cycle while the DTC for the same malfunction has been stored in the PCM. • The MIL flashes if the PCM detects a misfire which can damage the catalytic converter during the first drive cycle. • PENDING CODE is available if the PCM detects a misfire which affects emission performance during first drive cycle. • FREEZE FRAME DATA is available. • DTCs are stored in the PCM memory.
POSSIBLE CAUSE	• Spark plug malfunction • Ignition coil malfunction • Ignition system malfunction • Fuel injector malfunction • Air suction in intake air system (between dynamic chamber and cylinder head) • Inadequate engine compression due to engine internal malfunction • Related connector or terminal malfunction • Related wiring harness • Injector driver module malfunction

Diagnostic procedure

STEP	INSPECTION		ACTION
1	**VERIFY FREEZE FRAME DATA AND DIAGNOSTIC MONITORING TEST RESULTS HAVE BEEN RECORDED** • Have the FREEZE FRAME DATA and DIAGNOSTIC MONITORING TEST RESULTS (Misfire related) been recorded?	Yes	Go to the next step.
		No	Record the FREEZE FRAME DATA and DIAGNOSTIC MONITORING TEST RESULTS on the repair order, then go to the next step.
2	**VERIFY RELATED REPAIR INFORMATION AVAILABILITY** • Verify related Service Bulletins and/or on-line repair information availability. • Is any related repair information available?	Yes	Perform repair or diagnosis according to the available repair information. • If the vehicle is not repaired, go to the next step.
		No	Go to the next step.
3	**VERIFY RELATED PENDING CODE OR STORED DTCs** • Turn the ignition switch off then to the ON position (Engine off). • Verify related pending code or stored DTCs. • Are other DTCs present?	Yes	Go to the appropriate DTC troubleshooting. (See 01–02B–14 DTC TABLE [L3 WITH TC].)
		No	Go to the next step.
4	**VERIFY CURRENT INPUT SIGNAL STATUS (KEY TO ON /IDLE)** • Access APP1, APP2, ECT, IAT, MAF, RPM, TP and VSS PIDs using the WDS or equivalent. (See 01–40B–6 PCM INSPECTION [L3 WITH TC].) • Is there any signal that is far out of specification when the ignition switch is turned to the ON position and the engine idles?	Yes	Inspect the suspected circuit and/or part according to inspection results. Then go to Step 15. (See 01–40B–6 PCM INSPECTION [L3 WITH TC].)
		No	Go to the next step.
5	**VERIFY CURRENT INPUT SIGNAL STATUS UNDER TROUBLE CONDITION** • Inspect the same PIDs as in Step 4 while simulating the FREEZE FRAME DATA condition. • Is there any signal which causes drastic changes?	Yes	Inspect the suspected circuit and/or part according to inspection results. Then go to Step 15. (See 01–40B–6 PCM INSPECTION [L3 WITH TC].)
		No	Go to the next step.

STEP	INSPECTION		ACTION
6	**INSPECT SPARK PLUG CONDITION** • Turn the ignition switch off. • Remove the spark plug from the suspected cylinder. • Inspect the spark plug condition: — Cracks — Excess wear — Gap — Wetness • Is there any problem found on the spark plug?	Yes	• If a spark plug is wet, fuel flooding is suspected. Then go to Step 15. • If a spark plug has cracks, excessive wear or an improper gap, replace the malfunctioning spark plug. Then go to Step 15.
		No	Go to the next step.
7	**INSPECT INTAKE-AIR SYSTEM FOR AIR SUCTION** • Inspect for air leakage at the following: — Around connection of dynamic chamber and intake manifold — Around connection of intake manifold and cylinder head • Is air leakage found?	Yes	Repair or replace suspected part, then go to Step 15.
		No	Go to the next step.
8	**INSPECT SEALING OF ENGINE COOLANT PASSAGE** • Perform "ENGINE COOLANT LEAKAGE INSPECTION." (See 01–12B–5 ENGINE COOLANT LEAKAGE INSPECTION [L3 WITH TC].) • Is there any malfunction?	Yes	Repair or replace the malfunctioning part according to the inspection results. Then go to Step 15.
		No	Go to the next step.
9	**INSPECT FUEL INJECTOR WIRING HARNESS** • Remove the intake air system parts. • Disconnect the fuel injector connector on suspected cylinder. • Connect the NOID LIGHT to the fuel injector terminals. • Inspect the light dim during cranking. • Does the light not illuminate?	Yes	Go to the next step.
		No	Inspect the fuel injector wiring harnesses. Repair or replace if necessary, then go to Step 15.
10	**INSPECT IGNITION COIL HARNESSES** • Inspect the ignition coil related wiring harness condition (intermittent open or short circuit) of the suspected cylinder. • Are the wiring harness conditions normal?	Yes	Go to the next step.
		No	Repair the suspected wiring harnesses, then go to Step 15.
11	**INSPECT IGNITION SYSTEM OPERATION** • Carry out the spark test. (See 01–03B–90 Spark Test) • Is a strong blue spark visible at the suspected cylinder?	Yes	Go to the next step.
		No	Repair or replace the malfunctioning part according to the spark test result. Then go to Step 15.
12	**INSPECT ENGINE COMPRESSION** • Inspect the engine compression. (See 01–10B–9 COMPRESSION INSPECTION [L3 WITH TC].) • Is the engine compression normal?	Yes	Go to the next step.
		No	Overhaul the engine, then go to the next step.
13	**INSPECT FUEL INJECTOR OPERATION** • Connect the WDS or equivalent to DLC-2. • Access INJ#1, INJ#2, INJ#3, INJ#4 PIDs. • Start the engine and warm it up to the normal operating temperature. • Turn the fuel injector off from on using the PID simulation function. • Does the engine speed decrease while the fuel injectors are turned off?	Yes	Go to the Step 15.
		No	Go to the next step.
14	**INSPECT INJECTOR DRIVER MODULE** • Inspect the injector driver module and the related wiring harness. (See 01–40B–21 INJECTOR DRIVER MODULE INSPECTION [L3 WITH TC].) • Is there any malfunction?	Yes	Go to the next step.
		No	Inspect and replace the fuel injector for the cylinder in which the engine speed does not decrease. Then go to the next step. (See 01–03B–87 Fuel Injector Operation Inspection.)

STEP	INSPECTION		ACTION
15	**VERIFY IF TROUBLESHOOTING OF MISFIRE DTC COMPLETED** • Make sure to reconnect all disconnected connectors. • Start the engine. • Clear the DTC from the PCM memory using the WDS or equivalent. • Perform the HO2S heater, HO2S, and TWC Repair Verification Drive Mode. (See 01–02B–9 OBD-II DRIVE MODE [L3 WITH TC].) • Is the PENDING CODE for this DTC present?	Yes	Replace the PCM, then go to the next step. (See 01–40B–6 PCM REMOVAL/INSTALLATION [L3 WITH TC].)
		No	Go to the next step.
16	**VERIFY AFTER REPAIR PROCEDURE** • Perform the "AFTER REPAIR PROCEDURE". (See 01–02B–8 AFTER REPAIR PROCEDURE [L3 WITH TC].) • Are any DTCs present?	Yes	Go to the applicable DTC troubleshooting. (See 01–02B–14 DTC TABLE [L3 WITH TC].)
		No	Troubleshooting completed.

DTC P0327 [L3 WITH TC]

E6U010200300W12

DTC P0327	Knock sensor circuit low input
DETECTION CONDITION	• PCM monitors the input signal from the knock sensor when the engine is running. If the input voltage at the PCM terminals between 2P and 2S is **below 0.12 V**, the PCM determines that the knock sensor circuit has a malfunction. **Diagnostic support note** • This is a continuous monitor (CCM). • MIL illuminates if the PCM detects the above malfunction condition during first drive cycle. • FREEZE FRAME DATA is available. • DTCs are stored in the PCM memory.
POSSIBLE CAUSE	• Knock sensor malfunction • Connector or terminal malfunction • Open or short to ground circuit between knock sensor connector terminal A and PCM terminal 2S • Open or short to ground circuit between knock sensor connector terminal B and PCM terminal 2P • Knock sensor wires (2) shorted • PCM malfunction

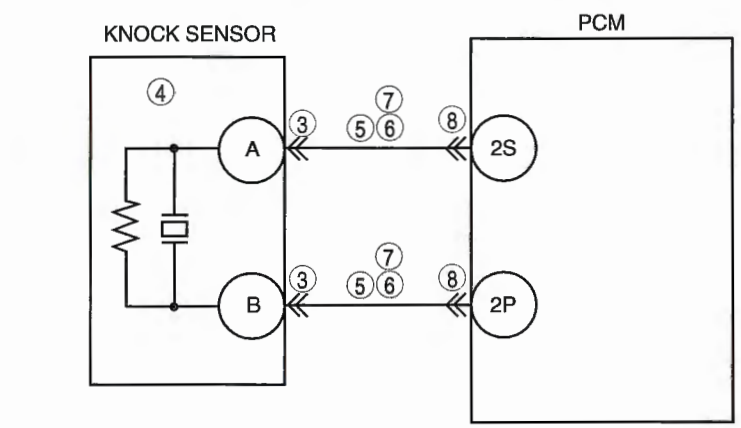

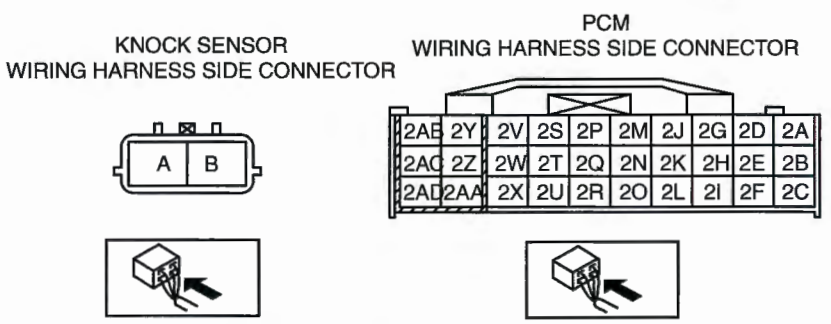

Diagnostic procedure

STEP	INSPECTION		ACTION
1	**VERIFY FREEZE FRAME DATA HAS BEEN RECORDED** • Has the FREEZE FRAME DATA been recorded?	Yes	Go to the next step.
		No	Record FREEZE FRAME DATA on the repair order, then go to the next step.
2	**VERIFY RELATED REPAIR INFORMATION AVAILABILITY** • Check for related Service Bulletins and/or on-line repair information availability. • Is any related repair information available?	Yes	Perform the repair or diagnosis according to the available repair information. • If the vehicle is not repaired, go to the next step.
		No	Go to the next step.
3	**INSPECT KNOCK SENSOR CONNECTOR TERMINAL FOR POOR CONNECTION** • Turn the ignition switch off. • Disconnect the knock sensor connector. • Check for poor connection at terminals A and B (such as damaged, pulled-out pins, corrosion). • Is there any malfunction?	Yes	Repair the terminal, then go to Step 9.
		No	Go to the next step.
4	**INSPECT KNOCK SENSOR** • Perform the knock sensor inspection. (See 01–40B–35 KNOCK SENSOR (KS) INSPECTION [L3 WITH TC]) • Is the knock sensor normal?	Yes	Go to the next step.
		No	Replace the knock sensor, then go to the next step.
5	**INSPECT KNOCK SENSOR CIRCUITS FOR OPEN CIRCUIT** • Disconnect the knock sensor connector. • Inspect the continuity between the following circuits: — Knock sensor female terminal A (harness-side) and PCM terminal 2S (harness-side) — Knock sensor female terminal B (harness-side) and PCM terminal 2P (harness-side) • Is there continuity?	Yes	Go to the next step.
		No	Repair or replace the suspected wiring harness, then go to Step 9.
6	**INSPECT KNOCK SENSOR CIRCUITS FOR SHORT TO GROUND** • Inspect the continuity between the following circuits: — Knock sensor female terminal A (harness-side) and body ground — Knock sensor female terminal B (harness-side) and body ground • Is there continuity?	Yes	Repair or replace the suspected wiring harness, then go to Step 9.
		No	Go to the next step.
7	**INSPECT FOR SHORT CIRCUITS** • Inspect for continuity between knock sensor female terminals A and B (harness-side). • Is there continuity?	Yes	Repair or replace the suspected wiring harness, then go to Step 9.
		No	Go to the next step.
8	**INSPECT PCM CONNECTOR TERMINAL FOR POOR CONNECTION** • Turn the ignition switch off. • Disconnect the PCM connector. • Inspect for poor connection at terminals 2P and 2S (such as damaged, pulled-out pins, corrosion). • Is there any malfunction?	Yes	Repair the terminal, then go to the next step.
		No	Go to the next step.
9	**VERIFY TROUBLESHOOTING OF DTC P0327 COMPLETED** • Make sure to reconnect all disconnected connectors. • Turn ignition switch to the ON position (Engine off). • Clear the DTC from the PCM memory using the WDS or equivalent. • Start the engine and warm it up completely. • Is the same DTC present?	Yes	Replace the PCM, then go to the next step. (See 01–40B–6 PCM REMOVAL/INSTALLATION [L3 WITH TC].)
		No	Go to the next step.
10	**VERIFY AFTER REPAIR PROCEDURE** • Perform the "After Repair Procedure". (See 01–02B–8 AFTER REPAIR PROCEDURE [L3 WITH TC].) • Are any DTCs present?	Yes	Go to the applicable DTC inspection. (See 01–02B–14 DTC TABLE [L3 WITH TC].)
		No	Troubleshooting completed.

DTC P0328 [L3 WITH TC]

E6U010200300W13

DTC P0328	Knock sensor circuit high input
DETECTION CONDITION	• PCM monitors the input signal from the knock sensor when the engine is running. If the input voltage at the PCM terminals between 2P and 2S is **below 4.9 V**, the PCM determines that the knock sensor circuit has a malfunction. **Diagnostic support note** • This is a continuous monitor (CCM). • MIL illuminates if the PCM detects the above malfunction condition during first drive cycle. • FREEZE FRAME DATA is available. • DTCs are stored in the PCM memory.
POSSIBLE CAUSE	• Knock sensor malfunction • Connector or terminal malfunction • Short to the power supply in the wiring harness between knock sensor terminal A and PCM terminal 2S • Short to the power supply in the wiring harness between knock sensor terminal B and PCM terminal 2P • PCM malfunction

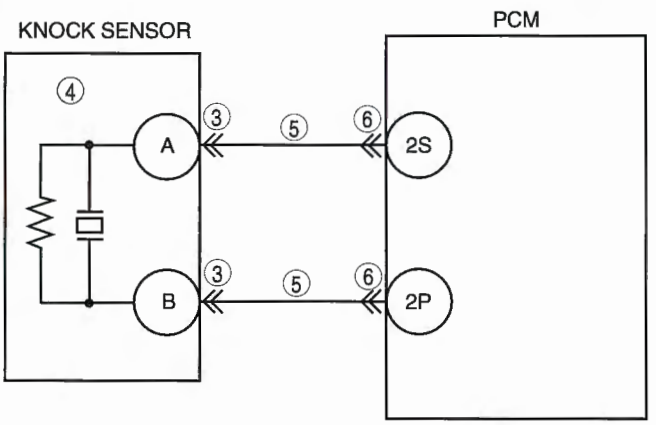

KNOCK SENSOR WIRING HARNESS SIDE CONNECTOR

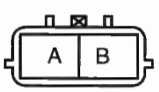

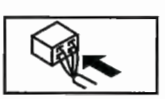

PCM WIRING HARNESS SIDE CONNECTOR

2AB	2Y	2V	2S	2P	2M	2J	2G	2D	2A
2AC	2Z	2W	2T	2Q	2N	2K	2H	2E	2B
2AD	2AA	2X	2U	2R	2O	2L	2I	2F	2C

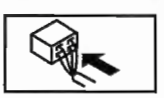

Diagnostic procedure

STEP	INSPECTION		ACTION
1	**VERIFY FREEZE FRAME DATA HAS BEEN RECORDED** • Has the FREEZE FRAME DATA been recorded?	Yes	Go to the next step.
		No	Record FREEZE FRAME DATA on the repair order, then go to the next step.
2	**VERIFY RELATED REPAIR INFORMATION AVAILABILITY** • Check for related Service Bulletins and/or on-line repair information availability. • Is any related repair information available?	Yes	Perform the repair or diagnosis according to the available repair information. • If the vehicle is not repaired, go to the next step.
		No	Go to the next step.
3	**INSPECT KNOCK SENSOR CONNECTOR TERMINAL FOR POOR CONNECTION** • Turn the ignition switch off. • Disconnect the knock sensor connector. • Inspect for poor connection at terminals A and B (such as damaged, pulled-out pins, corrosion). • Is there any malfunction?	Yes	Repair terminal, then go to step 7.
		No	Go to the next step.
4	**INSPECT KNOCK SENSOR** • Perform the knock sensor inspection. (See 01–40B–35 KNOCK SENSOR (KS) INSPECTION [L3 WITH TC]) • Is the knock sensor normal?	Yes	Go to the next step.
		No	Replace the knock sensor, then go to step 7.
5	**INSPECT KNOCK SIGNAL CIRCUIT FOR SHORT TO POWER SUPPLY** • Turn ignition switch to the ON position (Engine off). • Measure the voltage between knock sensor terminal A (harness-side) and body ground and knock sensor terminal B (harness-side) and body ground. • Is there any voltage?	Yes	Repair or replace the wiring harness for a short to the power supply, then go to step 7.
		No	Go to the next step.
6	**INSPECT PCM CONNECTOR FOR POOR CONNECTION** • Disconnect the PCM connector. • Inspect for poor connection (such as damaged/pulled-out pins, corrosion). • Is there any malfunction?	Yes	Repair or replace the terminal, then go to the next step.
		No	Go to the next step.
7	**VERIFY TROUBLESHOOTING OF DTC P0328 COMPLETED** • Make sure to connect all disconnected connectors. • Turn ignition switch to the ON position (Engine off). • Clear the DTC from the PCM memory using the WDS or equivalent. • Start the engine and warm it up completely. • Is same DTC present?	Yes	Replace the PCM, then go to the next step. (See 01–40B–6 PCM REMOVAL/INSTALLATION [L3 WITH TC].)
		No	Go to the next step.
8	**VERIFY AFTER REPAIR PROCEDURE** • Perform the "After Repair Procedure". (See 01–02B–8 AFTER REPAIR PROCEDURE [L3 WITH TC].) • Are any DTCs present?	Yes	Go to the applicable DTC inspection. (See 01–02B–14 DTC TABLE [L3 WITH TC].)
		No	Troubleshooting completed.

DTC P0335 [L3 WITH TC]

E6U010200300W14

DTC P0335	CKP sensor circuit malfunction
DETECTION CONDITION	• If the PCM does not receive the input voltage from the CKP sensor for **4.2 s** while the MAF is **2.0 g/s {0.26 lb/min.} or above**, the PCM determines that the CKP sensor circuit has a malfunction. **Diagnostic support note** • This is a continuous monitor (CCM). • MIL illuminates if the PCM detects the above malfunction condition during first drive cycle. • FREEZE FRAME DATA is available. • DTCs are stored in the PCM memory.
POSSIBLE CAUSE	• CKP sensor malfunction • Connector or terminal malfunction • CKP sensor is dirty. • Short to the power supply between CKP sensor terminal A and PCM terminal 2H • Short to the power supply between CKP sensor terminal B and PCM terminal 2C • Short to ground between CKP sensor terminal C and main relay • Short to ground between CKP sensor terminal B and PCM terminal 2C • Open circuit between CKP sensor terminal A and PCM terminal 2H • Open circuit between CKP sensor terminal B and PCM terminal 2C • Open circuit between CKP sensor terminal C and main relay • CKP sensor pulse wheel malfunction • Both CKP sensor wires are shorted to each other • PCM malfunction

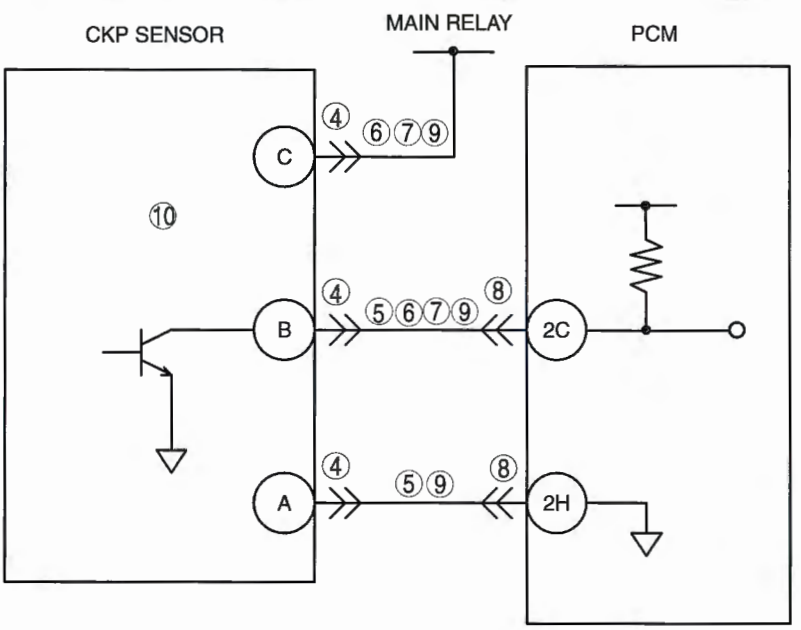

CKP SENSOR
WIRING HARNESS-SIDE CONNECTOR



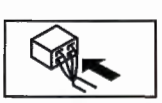

PCM
WIRING HARNESS-SIDE CONNECTOR

2AB	2Y	2V	2S	2P	2M	2J	2G	2D	2A
2AC	2Z	2W	2T	2Q	2N	2K	2H	2E	2B
2AD	2AA	2X	2U	2R	2O	2L	2I	2F	2C

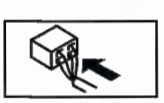

Diagnostic procedure

STEP	INSPECTION		ACTION
1	**VERIFY FREEZE FRAME DATA HAS BEEN RECORDED** • Has the FREEZE FRAME DATA been recorded?	Yes	Go to the next step.
		No	Record FREEZE FRAME DATA on the repair order, then go to the next step.
2	**VERIFY RELATED REPAIR INFORMATION AVAILABILITY** • Check for related Service Bulletins and/or on-line repair information availability. • Is any related repair information available?	Yes	Perform repair or diagnosis according to the available the repair information. • If the vehicle is not repaired, go to the next step.
		No	Go to the next step.
3	**VERIFY CKP SENSOR VOLTAGE** • Disconnect the CKP sensor connector. • Connect the voltmeter between the CKP sensor connector terminals B and C (sensor-side). • Inspect the voltage in the AC range while cranking the engine. • Is there any voltage?	Yes	Go to the next step.
		No	Go to step 10.
4	**INSPECT CKP SENSOR CONNECTOR FOR POOR CONNECTION** • Verify that the CKP sensor connector is connected securely. • Is connector normal?	Yes	Go to the next step.
		No	Reconnect the connector, then go to Step 11.
5	**INSPECT CKP CIRCUIT FOR SHORT TO POWER SUPPLY** • Turn ignition switch OFF • Disconnect the CKP sensor connector. • Turn ignition switch to the ON position (Engine off). • Measure the voltage between following terminals (harness-side): — CKP sensor terminal A — CKP sensor terminal B • Is there any voltage?	Yes	Repair or replace the suspected wiring harness, then go to Step 11.
		No	Go to the next step.
6	**INSPECT CKP CIRCUIT FOR SHORT TO GROUND** • Inspect for continuity between following terminal and body ground: — CKP sensor connector terminal C (harness-side) — CKP sensor connector terminal B (harness-side) • Is there continuity?	Yes	Repair or replace the suspected wiring harness, then go to Step 11.
		No	Go to the next step.
7	**INSPECT CKP CIRCUITS FOR SHORT CIRCUIT** • Inspect for continuity between CKP sensor connector terminals B and C (harness-side). • Is there continuity?	Yes	Repair or replace the suspected wiring harness, then go to Step 11.
		No	Go to the next step.
8	**INSPECT PCM CONNECTOR FOR POOR CONNECTION** • Disconnect the PCM connector. • Inspect for poor connection (such as damaged/ pulled-out pins, corrosion). • Is there any malfunction?	Yes	Repair the terminal, then go to Step 11.
		No	Go to the next step.
9	**INSPECT CKP CIRCUIT FOR OPEN CIRCUIT** • Inspect for continuity between the following circuits: — CKP sensor terminal A (harness-side) and PCM terminal 2H (harness-side) — CKP sensor terminal B (harness-side) and PCM terminal 2C (harness-side) — CKP sensor terminal C (harness-side) and main relay • Are there continuity?	Yes	Go to Step 11.
		No	Repair or replace the suspected wiring harness, then go to Step 11.

STEP	INSPECTION		ACTION
10	**INSPECT CKP SENSOR** • Turn the ignition switch off. • Perform the CKP sensor inspection. (See 01–40B–38 CRANKSHAFT POSITION (CKP) SENSOR INSPECTION [L3 WITH TC]) • Is the CKP sensor normal?	Yes	Go to the next step.
		No	Inspect the CKP sensor pulse wheel for damage. Replace the CKP sensor pulse wheel and go to the next step.
11	**VERIFY TROUBLESHOOTING OF DTC P0335 COMPLETED** • Make sure to reconnect all disconnected connectors. • Turn ignition switch to the ON position (Engine off). • Clear the DTC from the PCM memory using the WDS or equivalent. • Start the engine. • Access the MAF PID using the WDS or equivalent. **Note** • The MAF PID should indicate **2.0 g/s {0.26 lb/min.} or above** during this test • Is the same DTC present?	Yes	Replace the PCM, then go to the next step. (See 01–40B–6 PCM REMOVAL/INSTALLATION [L3 WITH TC].)
		No	Go to the next step.
12	**VERIFY AFTER REPAIR PROCEDURE** • Perform the "After Repair Procedure". (See 01–02B–8 AFTER REPAIR PROCEDURE [L3 WITH TC].) • Are any DTCs present?	Yes	Go to the applicable DTC inspection. (See 01–02B–14 DTC TABLE [L3 WITH TC].)
		No	Troubleshooting completed.

DTC P0340 [L3 WITH TC]

E6U010200300W15

DTC P0340	Camshaft position (CMP) sensor circuit malfunction
DETECTION CONDITION	• PCM monitors the input voltage from the CMP sensor when engine is running. If the PCM does not receive the input voltage from the CMP sensor while the PCM receives the input signal from the CKP sensor, the PCM determines that the CMP circuit has a malfunction. **Diagnostic support note** • This is a continuous monitor (CCM). • MIL illuminates if the PCM detects the above malfunction condition during first drive cycle. • FREEZE FRAME DATA is available. • DTCs are stored in the PCM memory.
POSSIBLE CAUSE	• CMP sensor malfunction • Connector or terminal malfunction • CMP sensor is dirty • Short to the power circuit between CMP sensor terminal C and PCM terminal 2E • Short to the power circuit between CMP sensor terminal B and PCM terminal 2H • Short to ground circuit between CMP sensor terminal A and main relay • Short to ground circuit between CMP sensor terminal C and PCM terminal 2E • Open circuit between CMP sensor terminal A and main relay • Open circuit between CMP sensor terminal B and PCM terminal 2H • Open circuit between CMP sensor terminal C and PCM terminal 2E • Both CMP sensor wires are shorted to each other • CKP sensor pulse wheel malfunction • CKP sensor misinstallation • Timing chain misinstallation • Loose timing chain or improper valve timing • Loose camshaft sprocket lock bolt • Loose crankshaft pulley lock bolt • PCM malfunction

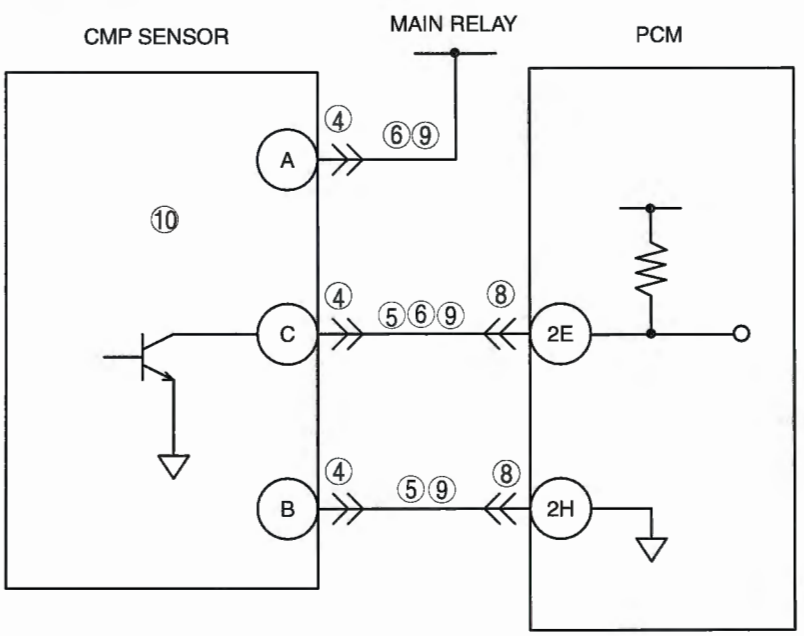

CMP SENSOR
WIRING HARNESS-SIDE CONNECTOR

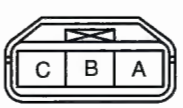

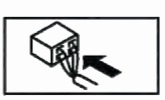

PCM
WIRING HARNESS-SIDE CONNECTOR

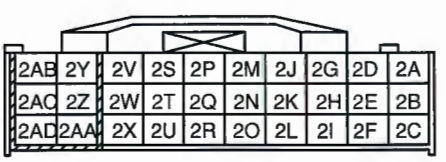

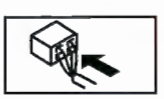

Diagnostic procedure

STEP	INSPECTION		ACTION
1	**VERIFY FREEZE FRAME DATA HAS BEEN RECORDED** • Has the FREEZE FRAME DATA been recorded?	Yes	Go to the next step.
		No	Record FREEZE FRAME DATA on the repair order, then go to the next step.
2	**VERIFY RELATED REPAIR INFORMATION AVAILABILITY** • Check for related Service Bulletins and/or on-line repair information availability. • Is any related repair information available?	Yes	Perform the repair or diagnosis according to the available repair information. • If the vehicle is not repaired, go to the next step.
		No	Go to the next step.
3	**VERIFY CMP SENSOR VOLTAGE** • Disconnect the CMP sensor connector. • Connect a voltmeter between CMP sensor connector terminals A and C (sensor-side). • Inspect the voltage in AC range while cranking the engine. • Is there any voltage?	Yes	Go to the next step.
		No	Go to step 10.
4	**INSPECT CMP SENSOR CONNECTOR FOR POOR CONNECTION** • Verify that the CMP sensor connector is connected securely. • Is the connector normal?	Yes	Go to the next step.
		No	Reconnect the connector, then go to Step 15.
5	**INSPECT CMP CIRCUIT FOR SHORT TO POWER** • Turn ignition switch OFF. • Disconnect the CMP sensor connector. • Turn ignition switch to the ON position (Engine off) • Measure voltage between the following terminals: — CMP sensor connector terminal C (harness-side) and body ground — CMP sensor connector terminal B (harness-side) and body ground • Is the voltage B+ ?	Yes	Repair or replace the suspected wiring harness, then go to Step 15.
		No	Go to the next step.
6	**INSPECT CMP CIRCUIT FOR SHORT TO GROUND** • Inspect for continuity between the following terminal and body ground: — CMP sensor connector terminal A (harness-side) — CMP sensor connector terminal C (harness-side) • Is there continuity?	Yes	Repair or replace the suspected wiring harness, then go to Step 15.
		No	Go to the next step.
7	**INSPECT CMP CIRCUITS FOR SHORT CIRCUIT** • Inspect for continuity between CMP sensor connector terminals A and C (harness-side). • Is there continuity?	Yes	Repair or replace the suspected wiring harness, then go to Step 15.
		No	Go to the next step.
8	**INSPECT PCM CONNECTOR FOR POOR CONNECTION** • Disconnect the PCM connector. • Inspect for poor connection (damaged, pulled-out terminals, corrosion, etc.). • Is there any malfunction?	Yes	Repair the terminal, then go to Step 15.
		No	Go to the next step.
9	**INSPECT CMP CIRCUIT FOR OPEN CIRCUIT** • Inspect for continuity between the following circuits: — CMP sensor terminal A (harness-side) and main relay — CMP sensor terminal B (harness-side) and PCM terminal 2H (harness-side) — CMP sensor terminal C (harness-side) and PCM terminal 2E (harness-side) • Is there continuity?	Yes	Go to Step 11.
		No	Repair or replace the suspected wiring harness, then go to Step 15.

STEP	INSPECTION		ACTION
10	**INSPECT CMP SENSOR** • Turn the ignition switch off. • Perform the CMP sensor inspection. (See 01–40B–36 CAMSHAFT POSITION (CMP) SENSOR INSPECTION [L3 WITH TC].) • Is the CMP sensor normal?	Yes	Go to the Step 15.
		No	Replace the CMP sensor and go to Step 15.
11	**VERIFY CKP SENSOR INSTALLATION** • Verify the CKP sensor installation. (See 01–40B–41 CRANKSHAFT POSITION (CKP) SENSOR REMOVAL/INSTALLATION [L3 WITH TC].) • Is the CKP sensor installed correctly?	Yes	Go to the next step.
		No	Reinstall the CKP sensor and go to Step 15.
12	**VERIFY VALVE TIMING MECHANISM INSTALLATION** • Verify the valve timing mechanism installation for the following parts: — Timing chain misinstallation — Loose camshaft sprocket lock bolt — Loose crankshaft pulley lock bolt • Is the valve timing mechanism installed correctly?	Yes	Go to the next step.
		No	Reinstall the following parts and go to Step 15. • Timing chain • Camshaft sprocket • Crankshaft pulley
13	**INSPECT STOPPER PIN MECHANISM** • Remove the timing chain. • Inspect the stopper pin. (See 01–10B–37 VARIABLE VALVE TIMING ACTUATOR INSPECTION [L3 WITH TC].) • Is the stopper pin mechanism normal?	Yes	Go to the next step.
		No	Replace the variable valve timing actuator, then go to Step 15.
14	**INSPECT ROTOR POSITION** • Remove the variable valve timing actuator. (See 01–10B–36 VARIABLE VALVE TIMING ACTUATORE REMOVAL/INSTALLATION [L3 WITH TC]) • Is the rotor position at the maximum valve timing retard?	Yes	**VARIABLE VALVE TIMING MECHANISM NORMAL** **Note** • This DTC is detected as an intermittent concern. • The intermittent concern might be removed by cleaning the variable valve timing mode control function. Go to the next step.
		No	Replace the variable valve timing actuator, then go to the next step.
15	**VERIFY TROUBLESHOOTING OF DTC P0340 COMPLETED** • Make sure to reconnect all disconnected connectors. • Turn ignition switch to the ON position (Engine off). • Clear the DTC from the PCM memory using the WDS or equivalent. • Start the engine. • Access the MAF PID using the WDS or equivalent. **Note** • The MAF PID should indicate **1.95 g/s {0.25 lb/min.} or above** during this test • Is same DTC present?	Yes	Replace the PCM, then go to the next step. (See 01–40B–6 PCM REMOVAL/INSTALLATION [L3 WITH TC].)
		No	Go to the next step.
16	**VERIFY AFTER REPAIR PROCEDURE** • Perform the "After Repair Procedure". (See 01–02B–8 AFTER REPAIR PROCEDURE [L3 WITH TC].) • Are any DTCs present?	Yes	Go to the applicable DTC inspection. (See 01–02B–14 DTC TABLE [L3 WITH TC].)
		No	Troubleshooting completed.

DTC P0401 [L3 WITH TC]

E6U010200400W22

DTC P0401	EGR flow insufficient detected
DETECTION CONDITION	• PCM monitors the difference in intake manifold pressures when the EGR is operated and when it is stopped. If the difference is too small, the PCM determines that the EGR flow is insufficient. **Diagnostic support note** • This is an intermittent monitor (EGR system). • MIL illuminates if the PCM detects the above malfunction condition in two consecutive drive cycles or in one drive cycle while the DTC for the same malfunction has been stored in the PCM. • PENDING CODE is available if the PCM detects the above malfunction condition during first drive cycle. • FREEZE FRAME DATA is available. • DTCs are stored in the PCM memory.
POSSIBLE CAUSE	• EGR valve malfunction • MAP sensor malfunction • EGR gasket malfunction • PCM malfunction

Diagnostic procedure

STEP	INSPECTION		ACTION
1	**VERIFY FREEZE FRAME DATA AND DIAGNOSTIC MONITORING TEST RESULTS HAVE BEEN RECORDED** • Have the FREEZE FRAME DATA and DIAGNOSTIC MONITORING TEST RESULTS (EGR system related) been recorded?	Yes	Go to the next step.
		No	Record FREEZE FRAME DATA and DIAGNOSTIC MONITORING TEST RESULTS on the repair order, then go to the next step.
2	**VERIFY RELATED REPAIR INFORMATION AVAILABILITY** • Check for related Service Bulletins and/or on-line repair information availability. • Is any related repair information available?	Yes	Perform the repair or diagnosis according to the available repair information. • If the vehicle is not repaired, go to the next step.
		No	Go to the next step.
3	**INSPECT FOR OTHER DTCS** • Turn the ignition switch off then to the ON position (Engine off). • Have other DTCs been stored?	Yes	Repair the circuit malfunction for applicable DTCs.
		No	Go to the next step.
4	**INSPECT VACUUM HOSE CONDITION** • Inspect freezing vacuum hoses for clogs, damage, frozen, or vacuum leakage. • Is there any malfunction?	Yes	Replace the vacuum hoses, then go to Step 8.
		No	Go to the next step.
5	**INSPECT EGR VALVE MALFUNCTION** • Inspect the EGR valve. (See 01–16B–11 EGR VALVE INSPECTION [L3 WITH TC].) • Is the EGR valve normal?	Yes	Go to the next step.
		No	Replace the EGR valve, then go to Step 8.
6	**INSPECT MAP SENSOR MALFUNCTION** • Perform the MAP sensor inspection. (See 01–40B–31 MANIFOLD ABSOLUTE PRESSURE (MAP) SENSOR INSPECTION [L3 WITH TC].) • Is the EGR valve normal?	Yes	Go to the next step.
		No	Replace the MAP sensor, then go to Step 8.
7	**INSPECT EGR VALVE PASSAGE** • Turn the ignition switch off. • Remove the EGR valve. • Is the gasket installation normal?	Yes	Go to the next step.
		No	Install the gasket correctly, then go to the next step.
8	**MONITOR EGR SYSTEM BY DRIVE MODE** • Clear the DTC from the PCM memory using the WDS or equivalent. • Run the PCM Adaptive Memory Procedure Drive Mode. (See 01–02B–10 PCM Adaptive Memory Production Drive Mode.) • Stop the vehicle and access the ON BOARD READINESS TEST to inspect the DRIVE MODE completion status. • Verify the FUEL_EVAL and EGR_EVAL PIDs status. • Do the FUEL_EVAL and EGR_EVAL PIDs change to Yes?	Yes	Go to the next step.
		No	Retry this step.
9	**VERIFY TROUBLESHOOTING OF DTC P0401 COMPLETED** • Make sure to reconnect all disconnected connectors. • Access the DIAGNOSTIC MONITORING TEST RESULTS. (See 01–02B–8 Diagnostic Monitoring Test Results Access Procedure.) • Verify the TEST #10: 31: 83 (EGR pressure variation) value. • Is the value within the specification?	Yes	Go to the next step.
		No	Replace the PCM, then go to the next step.
0	**VERIFY AFTER REPAIR PROCEDURE** • Perform the "AFTER REPAIR PROCEDURE". (See 01–02B–8 AFTER REPAIR PROCEDURE [L3 WITH TC].) • Are any DTCs present?	Yes	Go to the applicable DTC inspection. (See 01–02B–14 DTC TABLE [L3 WITH TC].)
		No	Troubleshooting completed.

DTC P0403 [L3 WITH TC]

E6U010200400W23

DTC P0403	EGR valve (stepper motor) circuit malfunction
DETECTION CONDITION	• PCM monitors the input voltage from the EGR valve. If the voltage remain low or high, the PCM determine that the EGR valve circuit has a malfunction. **Diagnostic support note** • This is a continuous monitor. (CCM) • MIL illuminates if the PCM detects above malfunction condition in two consecutive drive cycles or in one drive cycle while the DTC for the same malfunction has been stored in the PCM. • PENDING CODE is available if the PCM detects the above malfunction condition during first drive cycle. • FREEZE FRAME DATA is not available. • DTCs are not stored in the PCM memory.
POSSIBLE CAUSE	• EGR valve malfunction • Connector or terminal malfunction • Short to the power supply in the wiring harness between EGR valve terminal E and PCM terminal 4D • Short to the power supply in the wiring harness between EGR valve terminal A and PCM terminal 4G • Short to the power supply in the wiring harness between EGR valve terminal B and PCM terminal 4J • Short to the power supply in the wiring harness between EGR valve terminal F and PCM terminal 4M • Short to ground circuit in wiring harness between EGR valve terminal E and PCM terminal 4D • Short to ground circuit in wiring harness between EGR valve terminal A and PCM terminal 4G • Short to ground circuit in wiring harness between EGR valve terminal B and PCM terminal 4J • Short to ground circuit in wiring harness between EGR valve terminal F and PCM terminal 4M • Open circuit in the wiring harness between EGR valve terminal E and PCM terminal 4D • Open circuit in the wiring harness between EGR valve terminal A and PCM terminal 4G • Open circuit in the wiring harness between EGR valve terminal B and PCM terminal 4J • Open circuit in the wiring harness between EGR valve terminal F and PCM terminal 4M • Open circuit in the wiring harness between main relay terminal C and EGR valve terminal C • Open circuit in the wiring harness between main relay terminal C and EGR valve terminal D • PCM malfunction

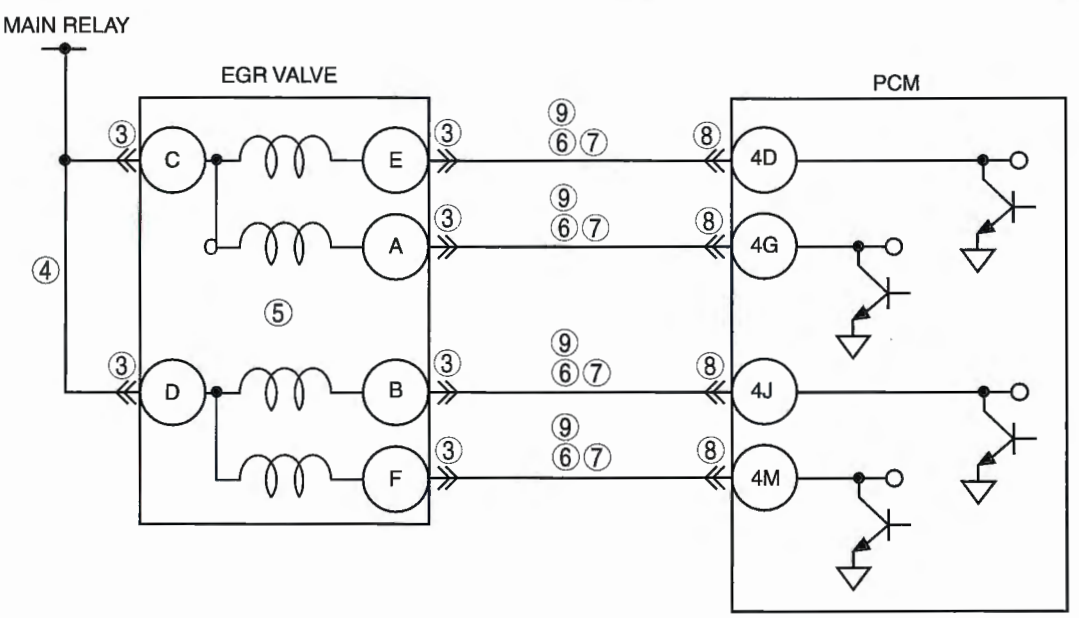

EGR VALVE
WIRING HARNESS SIDE CONNECTOR

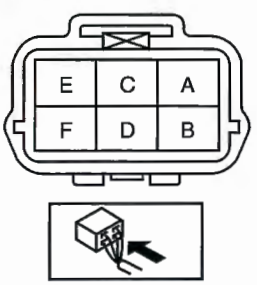

PCM
WIRING HARNESS SIDE CONNECTOR

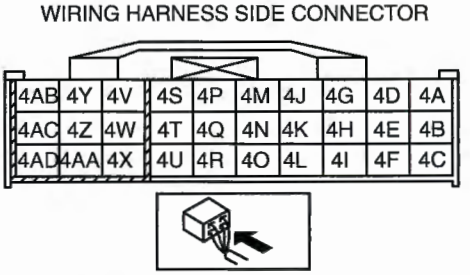

Diagnostic procedure

STEP	INSPECTION		ACTION
1	**VERIFY FREEZE FRAME DATA HAS BEEN RECORDED** • Has the FREEZE FRAME DATA been recorded?	Yes	Go to the next step.
		No	Record FREEZE FRAME DATA on the repair order, then go to the next step.
2	**VERIFY RELATED REPAIR INFORMATION AVAILABILITY** • Check for related Service Bulletins and/or on-line repair information availability. • Is any related repair information available?	Yes	Perform the repair or diagnosis according to the available repair information. • If the vehicle is not repaired, go to the next step.
		No	Go to the next step.
3	**INSPECT EGR VALVE CONNECTOR FOR POOR CONNECTION** • Turn the ignition switch off. • Disconnect the EGR valve connector. • Inspect for poor connection (such as damaged/ pulled-out pins, corrosion). • Is there any malfunction?	Yes	Repair or replace the terminals and/or connector, then go to Step 10.
		No	Go to the next step.
4	**INSPECT POWER CIRCUIT FOR OPEN CIRCUIT** • Turn ignition switch to the ON position (Engine off). • Measure the voltage following the terminal and body ground. — EGR valve terminal C (harness-side) — EGR valve terminal D (harness-side) • Is voltage **B+**?	Yes	Go to the next step.
		No	Repair or replace the wiring harness for an open circuit then go to Step 10.
5	**INSPECT EGR VALVE** • Perform the EGR valve inspection. (See 01–16B–11 EGR VALVE INSPECTION [L3 WITH TC].) • Is the EGR valve normal?	Yes	Go to the next step.
		No	Replace the EGR valve, then go to Step 10.
6	**INSPECT FOR CONTROL CIRCUIT FOR SHORT TO GROUND** • Turn the ignition switch off. • Inspect for continuity between the following terminals and body ground: — EGR valve terminal E (harness-side) — EGR valve terminal A (harness-side) — EGR valve terminal B (harness-side) — EGR valve terminal F (harness-side) • is there continuity?	Yes	Repair or replace the wiring harness for a short to ground, then go to Step 10.
		No	Go to the next step.
7	**INSPECT FOR CONTROL CIRCUIT FOR SHORT TO POWER SUPPLY** • Turn the ignition switch to the ON position (Engine off). • Measure the voltage between the following terminals and body ground: — EGR valve terminal E (harness-side) — EGR valve terminal A (harness-side) — EGR valve terminal B (harness-side) — EGR valve terminal F (harness-side) • Is voltage **B+**?	Yes	Repair or replace wiring harness for a short to power supply, then go to Step 10.
		No	Go to the next step.
8	**INSPECT PCM CONNECTOR FOR POOR CONNECTION** • Turn the ignition switch off. • Disconnect PCM connector. • Inspect for poor connection (such as damaged/ pulled-out pins, corrosion). • Is there any malfunction?	Yes	Repair or replace the terminals and/or connector, then go to Step 10.
		No	Go to the next step.

STEP	INSPECTION		ACTION
9	**INSPECT CONTROL CIRCUIT FOR OPEN CIRCUIT** • Remove the PCM with PCM connector connected. • Inspect for continuity between the following terminals (harness-side): — Between EGR valve terminal E and PCM terminal 4D — Between EGR valve terminal A and PCM terminal 4G — Between EGR valve terminal B and PCM terminal 4J — Between EGR valve terminal F and PCM terminal 4M • Is there continuity?	Yes	Go to the next step.
		No	Repair or replace harness for open circuit then go to the next step.
10	**VERIFY TROUBLESHOOTING OF DTC P0403 COMPLETED** • Make sure to reconnect all disconnected connectors. • Clear the DTC from the PCM memory using the WDS or equivalent. • Turn the ignition switch off. • Start the engine and warm it up completely. • Is the PENDING CODE for this DTC present?	Yes	Replace the PCM, then go to the next step. (See 01–40B–6 PCM REMOVAL/INSTALLATION [L3 WITH TC].)
		No	Go to the next step.
11	**VERIFY AFTER REPAIR PROCEDURE** • Perform the "After Repair Procedure". (See 01–02B–8 AFTER REPAIR PROCEDURE [L3 WITH TC].) • Are any DTCs present?	Yes	Go to the applicable DTC inspection. (See 01–02B–14 DTC TABLE [L3 WITH TC].)
		No	Troubleshooting completed.

DTC P0421 [L3 WITH TC]

E6U010200400V

DTC P0421	Warm up catalyst system efficiency below threshold
DETECTION CONDITION	• The PCM compares the number of front HO2S and rear HO2S inversions for a predetermined time. The PCM monitors the number of inversions the rear side performs while the front side inverts for a specified number of times when the following monitoring conditions are met. The PCM detects the inversion ratio. If the inversion ratio is below the threshold, The PCM determines that the catalyst system has deteriorated. **MONITORING CONDITIONS** — Engine speed: **1,500—3,000 rpm** — Calculated TWC temperature: **above 400 °C {752 °F}** — LOAD: **15—48%** (at engine speed of **2,000 rpm**) **Diagnostic support note** • This is an intermittent monitor (Catalyst). • The MIL illuminates if the PCM detects the above malfunction condition in two consecutive drive cycles or in one drive cycle while the DTC for the same malfunction has been stored in the PCM. • PENDING CODE is available if the PCM detects the above malfunction condition during the first drive cycle. • DIAGNOSTIC MONITORING TEST RESULTS is available. • FREEZE FRAME DATA is available. • The DTC is stored in the PCM memory.
POSSIBLE CAUSE	• TWC deterioration or malfunction • Exhaust gas leakage • Loose front HO2S • Loose rear HO2S • PCM malfunction

Diagnostic procedure

STEP	INSPECTION		ACTION
1	**VERIFY FREEZE FRAME DATA AND DIAGNOSTIC MONITORING TEST RESULTS HAVE BEEN RECORDED** • Have the FREEZE FRAME DATA and DIAGNOSTIC MONITORING TEST RESULTS (Catalyst related) been recorded?	Yes	Go to the next step.
		No	Record the FREEZE FRAME DATA and DIAGNOSTIC MONITORING TEST RESULTS on the repair order, then go to the next step.
2	**VERIFY RELATED REPAIR INFORMATION AVAILABILITY** • Verify related Service Bulletins and/or on-line repair information availability. • Is any related repair information available?	Yes	Perform the repair or diagnosis according to the available repair information. • If the vehicle is not repaired, go to the next step.
		No	Go to the next step.
3	**VERIFY RELATED PENDING CODE OR STORED DTC** • Turn the ignition switch off, then to the ON position (Engine off). • Verify the related PENDING CODE or stored DTCs. • Are other DTCs present?	Yes	Go to the applicable DTC inspection. (See 01–02B–14 DTC TABLE [L3 WITH TC].)
		No	Go to the next step.
4	**INSPECT EXHAUST SYSTEM FOR EXHAUST GAS LEAKAGE** • Visually inspect for exhaust gas leakage in the exhaust system. • Is there exhaust gas leakage?	Yes	Repair or replace the malfunctioning part, then go to Step 7.
		No	Go to the next step.
5	**INSPECT INSTALLATION OF FRONT AND REAR HO2S** • Inspect the front and rear HO2S for looseness. • Is it normal?	Yes	Go to the next step.
		No	Retighten the sensor, then go to Step 7. (See 01–15B–3 HO2S Removal Note.)
6	**INSPECT TWC** • Clear the DTC using the WDS or equivalent generic OBD function. • Turn the ignition switch off then back to the ON position. • Inspect the TWC. (See 01–16B–13 WARM-UP THREE-WAY CATALYTIC CONVERTER (WU-TWC) INSPECTION [L3 WITH TC].) • Is it normal?	Yes	Replace the heated oxygen sensor, then go to the next step.
		No	Replace the TWC, then go to the next step.
7	**VERIFY TROUBLESHOOTING OF DTC P0421 COMPLETED** • Make sure to reconnect all disconnected connectors. • Turn the ignition switch to the ON position (Engine off). • Clear the DTC from the memory using the WDS or equivalent. • Perform the HO2S heater, HO2S, and TWC Repair Verification Drive Mode. (See 01–02B–9 OBD-II DRIVE MODE [L3 WITH TC].) • Is the PENDING CODE for this DTC present?	Yes	Replace the PCM, then go to the next step. (See 01–40B–6 PCM REMOVAL/INSTALLATION [L3 WITH TC].)
		No	Go to the next step.
8	**VERIFY AFTER REPAIR PROCEDURE** • Perform the "AFTER REPAIR PROCEDURE". (See 01–02B–8 AFTER REPAIR PROCEDURE [L3 WITH TC].) • Are any DTCs present?	Yes	Go to the applicable DTC troubleshooting. (See 01–02B–14 DTC TABLE [L3 WITH TC].)
		No	Troubleshooting completed.

DTC P0441 [L3 WITH TC]

E6U010200400W25

DTC P0441	Evaporative emission control system incorrect purge flow
DETECTION CONDITION	• PCM measures the purge line pressure under the following conditions. If the vacuum between the charcoal canister and the intake manifold does not reach the specification, PCM determines that the EVAP system is clogged. **MONITORING CONDITION** — Engine speed: **1,500—3,000 rpm** — Vehicle speed: **53—136 km/h {32.9—84.5 mph}** **Diagnostic support note** • This is an intermittent monitor (Evaporative emission system). • MIL illuminates if the PCM detects the above malfunction condition in two consecutive drive cycles or in one drive cycle while the DTC for the same malfunction has been stored in the PCM. • PENDING CODE is available if the PCM detects the above malfunction condition during the first drive cycle. • FREEZE FRAME DATA is available. • DTC is stored in the PCM memory. • DIAGNOSTIC MONITORING TEST RESULT is available.
POSSIBLE CAUSE	• Purge solenoid valve malfunction • Evaporative emission system leak detection pump malfunction • Charcoal canister malfunction • EVAP hose damaged or loose • EVAP pipe damaged • PCM malfunction

Diagnostic procedure

STEP	INSPECTION		ACTION
1	**VERIFY FREEZE FRAME DATA AND DIAGNOSTIC MONITORING TEST RESULTS HAVE BEEN RECORDED** • Have the FREEZE FRAME DATA and DIAGNOSTIC MONITORING TEST RESULTS (Evaporative emission system related) been recorded?	Yes	Go to the next step.
		No	Record FREEZE FRAME DATA and DIAGNOSTIC MONITORING TEST RESULTS on the repair order, then go to the next step.
2	**VERIFY RELATED REPAIR INFORMATION AVAILABILITY** • Check for related Service Bulletins and/or on-line repair information availability. • Is any related repair information available?	Yes	Perform the repair or diagnosis according to the available repair information. • If the vehicle is not repaired, go to the next step.
		No	Go to the next step.
3	**VERIFY RELATED PENDING CODE OR STORED DTCS** • Turn the ignition switch off then to the ON position (Engine off). • Verify related pending code or stored DTCs. • Is DTC P0443 present?	Yes	Go to the appropriate DTC inspection.
		No	Go to the next step.
4	**DETERMINE IF LEAK CONCERN OR BLOCKAGE CONCERN** • Perform the evaporative system leak inspection. (See 01–03B–94 Evaporative Emission (EVAP) System Leak Inspection.) • Does the system inspection fail?	Yes	Go to Step 6.
		No	Go to the next step.
5	**INSPECT IF PURGE SOLENOID VALVE STUCK CLOSED** • Inspect if the purge solenoid valve is stuck closed. (See 01–16B–10 PURGE SOLENOID VALVE INSPECTION [L3 WITH TC].) • Is the purge solenoid valve normal?	Yes	Inspect the following parts for clogging. • Vacuum hoses between the intake manifold to the charcoal canister • Catch tank • Charcoal canister Repair or replace the part, then go to Step 11.
		No	Replace the purge solenoid valve, then go to Step 11.

STEP	INSPECTION		ACTION
6	**LOCATE LEAK POINT** • Inspect the following for leakage using the ultrasonic leak detector. — Charcoal canister — Catch tank — Fuel filler cap — EVAP hoses and pipes — Fuel tank • Is leakage found?	Yes	Repair leakage or replace the part, then go to Step 10.
		No	Go to the next step.
7	**INSPECT EVAP SYSTEM LEAK DETECTION PUMP** • Connect all disconnected connectors and hoses. • Place a clamp on the EVAP system leak detection pump hose between the EVAP system leak detection pump and air filter. • Perform the evaporative system leak inspection. (See 01–03B–94 Evaporative Emission (EVAP) System Leak Inspection.) • Does the test result fail (red light turns on)?	Yes	Go to Step 9.
		No	Go to the next step.
8	**CONFIRM EVAP SYSTEM LEAK DETECTION PUMP LEAKAGE** • Remove the clamp. • Perform the evaporative system leak inspection. (See 01–03B–94 Evaporative Emission (EVAP) System Leak Inspection.) • Does the test result fail (red light turns on)?	Yes	Replace the EVAP system leak detection pump, then go to Step 10.
		No	Go to the next step.
9	**INSPECT FUEL PUMP UNIT INSTALLATION** • Remove the fuel tank. • Visually inspect for damage, insufficient sealing or a poorly installed pump unit. • Is it normal?	Yes	Go to the next step.
		No	Repair or replace the fuel tank or sealing, then go to the next step.
10	**PERFORM LEAK INSPECTION** • Connect all disconnected connectors and hoses. • Perform the evaporative system leak inspection. (See 01–03B–94 Evaporative Emission (EVAP) System Leak Inspection.) • Does the test result fail (red light turns on)?	Yes	Leakage still exists. Locate leak the point and repair. Then go to the next step.
		No	Go to the next step
11	**VERIFY TROUBLESHOOTING OF DTC P0441 COMPLETED** • Start the engine and let it idle. • Clear the DTC using the WDS or equivalent. • Turn the ignition switch off. • Perform the "EVAP System Repair Verification Drive Mode". (See 01–02B–9 OBD-II DRIVE MODE [L3 WITH TC]) • Is the PENDING CODE for this DTC present?	Yes	Replace the PCM, then go to the next step.
		No	Go to the next step.
12	**VERIFY AFTER REPAIR PROCEDURE** • Perform the "AFTER REPAIR PROCEDURE". (See 01–02B–8 AFTER REPAIR PROCEDURE [L3 WITH TC].) • Are any DTCs present?	Yes	Go to the applicable DTC inspection. (See 01–02B–14 DTC TABLE [L3 WITH TC].)
		No	Troubleshooting completed.

DTC P0442 [L3 WITH TC]

E6U010200400W26

DTC P0442	Evaporative emission control system leak detected (small leak)
DETECTION CONDITION	• PCM measures the pump load current (EVAP line pressure) when the specified period has passed after the EVAP system is sealed when the monitoring conditions are met. If the load does not reach the reference current value within the specified period, the PCM determines that the EVAP system has a small leak. **MONITORING CONDITION** — The ignition switch is turned off. — IAT: **5—35 °C {40—95 °F}** — Battery voltage: **11V or above** — Atmospheric pressure: **72.2 kPa {542 mmHg, 21.3 inHg} or above** — Fuel tank level: **15—85%** — Time from engine off: **5 h 10 min** **Diagnostic support note** • This is an intermittent monitor (Evaporative emission system). • MIL illuminates if the PCM detects the above malfunction condition in two consecutive drive cycles or in one drive cycle while the DTC for the same malfunction has been stored in the PCM. • PENDING CODE is available if the PCM detects the above malfunction condition during first drive cycle. • FREEZE FRAME DATA is available. • DTCs are stored in the PCM memory. • DIAGNOSTIC MONITORING TEST RESULT is available.
POSSIBLE CAUSE	• Purge solenoid valve malfunction • EVAP system leak detection pump malfunction • Charcoal canister malfunction • Fuel filler cap malfunction • Fuel tank malfunction • Fuel pump unit poor seal • EVAP hose damaged or loose • EVAP pipe damaged

Diagnostic procedure

STEP	INSPECTION		ACTION
1	**VERIFY FREEZE FRAME DATA AND DIAGNOSTIC MONITORING TEST RESULTS HAVE BEEN RECORDED** • Have the FREEZE FRAME DATA and DIAGNOSTIC MONITORING TEST RESULTS (Evaporative emission system related) been recorded?	Yes	Go to the next step.
		No	Record FREEZE FRAME DATA and DIAGNOSTIC MONITORING TEST RESULTS on the repair order, then go to the next step.
2	**VERIFY RELATED REPAIR INFORMATION AVAILABILITY** • Check for related Service Bulletins and/or on-line repair information availability. • Is any related repair information available?	Yes	Perform the repair or diagnosis according to the available repair information. • If the vehicle is not repaired, go to the next step.
		No	Go to the next step.
3	**VERIFY RELATED PENDING CODE OR STORED DTCS** • Turn the ignition switch off then to the ON position (Engine off). • Verify related PENDING CODE or stored DTCs. • Are other DTCs present?	Yes	Go to the appropriate DTC inspection.
		No	Go to the next step.
4	**CLASSIFY INTERMITTENT CONCERN OR CONTINUOUS CONCERN** • Perform evaporative system leak inspection. (See 01–03B–94 Evaporative Emission (EVAP) System Leak Inspection.) • Does the test result fail?	Yes	Go to the next step.
		No	Intermittent concern exists. Inspect the purge solenoid valve and the EVAP system leak detection pump circuit for an intermittent concern. (See 01–03B–6 INTERMITTENT CONCERN TROUBLESHOOTING [L3 WITH TC].)
5	**LOCATE LEAK POINT** • Inspect for leakage for the following using the Evaporative Emissions Tester. — Charcoal canister — Catch tank — Fuel filler cap — EVAP hoses and pipes — Fuel tank • Is leakage found?	Yes	Repair the leakage or replace the part, then go to Step 10.
		No	Go to the next step.

STEP	INSPECTION		ACTION
6	**INSPECT PURGE SOLENOID VALVE** • Inspect purge solenoid valve is stuck closed. (See 01–16B–10 PURGE SOLENOID VALVE INSPECTION [L3 WITH TC].) • Is the purge solenoid valve normal?	Yes	Go to the next step.
		No	Replace the purge solenoid valve, then go to Step 10.
7	**INSPECT EVAP SYSTEM LEAK DETECTION PUMP** • Connect all disconnected connectors and hoses. • Place the clamp on the EVAP system leak detection pump hose between the EVAP system leak detection pump and the air filter. • Perform the evaporative system leak inspection. (See 01–03B–94 Evaporative Emission (EVAP) System Leak Inspection.) • Does the test result fail?	Yes	Go to Step 9.
		No	Go to the next step.
8	**CONFIRM EVAP SYSTEM LEAK DETECTION PUMP LEAKAGE** • Remove the clamp. • Perform the evaporative system leak inspection. (See 01–03B–94 Evaporative Emission (EVAP) System Leak Inspection.) • Does the test result failed?	Yes	Replace the EVAP system leak detection pump, then go to Step 10.
		No	Go to the next step.
9	**INSPECT FUEL PUMP UNIT INSTALLATION** • Remove the fuel tank. • Visually inspect for damage, insufficient sealing or a poorly installed pump unit. • Is it normal?	Yes	Go to the next step.
		No	Repair or replace the fuel tank or sealing, then go to the next step.
10	**PERFORM LEAK INSPECTION** • Connect all disconnected connectors and hoses. • Perform the evaporative system leak inspection. (See 01–03B–94 Evaporative Emission (EVAP) System Leak Inspection.) • Does the test result failed?	Yes	Leakage still exists. Locate the leak point and repair. Then go to the next step.
		No	Go to the next step
11	**VERIFY AFTER REPAIR PROCEDURE** • Perform the "AFTER REPAIR PROCEDURE". (See 01–02B–8 AFTER REPAIR PROCEDURE [L3 WITH TC].) • Are any DTCs present?	Yes	Go to the applicable DTC inspection. (See 01–02B–14 DTC TABLE [L3 WITH TC].)
		No	Troubleshooting completed.

DTC P0443 [L3 WITH TC]

E6U010200400W27

DTC P0443	EVAP control system purge control valve circuit malfunction
DETECTION CONDITION	• PCM monitors the input voltages from the purge solenoid valve. If the voltage remains low or high, the PCM determines that the purge solenoid valve circuit has a malfunction. **Diagnostic support note** • This is an continuous monitor (CCM). • MIL illuminates if the PCM detects the above malfunction condition in two consecutive drive cycles or in one drive cycle while the DTC for the same malfunction has been stored in the PCM. • PENDING CODE is available if the PCM detects the above malfunction condition during the first drive cycle. • FREEZE FRAME DATA is available. • DTCs are stored in the PCM memory.
POSSIBLE CAUSE	• Purge solenoid valve malfunction • Connector or terminal malfunction • Short to ground in the wiring harness between purge solenoid valve terminal B and PCM terminal 4T • Open circuit in the wiring harness between the main relay and purge solenoid valve terminal A • Open circuit in the wiring harness between purge solenoid valve terminal B and PCM terminal 4T • Short to the power supply between purge solenoid valve terminal B and PCM terminal 4T • PCM malfunction

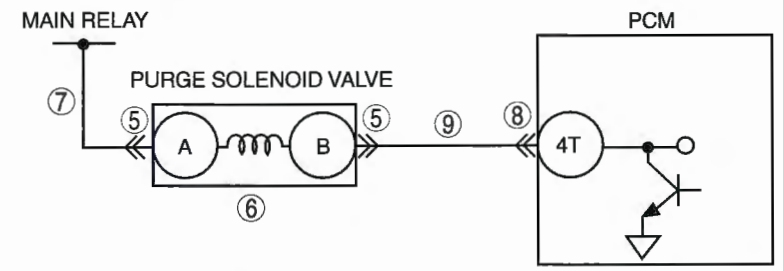

PURGE SOLENOID VALVE
WIRING HARNESS SIDE CONNECTOR



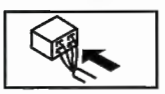

PCM
WIRING HARNESS SIDE CONNECTOR

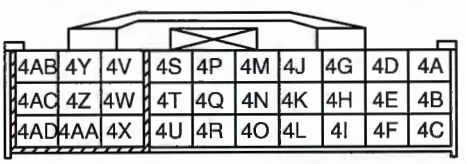

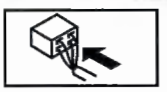

Diagnostic procedure

STEP	INSPECTION		ACTION
1	**VERIFY FREEZE FRAME DATA HAS BEEN RECORDED** • Has the FREEZE FRAME DATA been recorded?	Yes	Go to the next step.
		No	Record FREEZE FRAME DATA on the repair order, then go to the next step.
2	**VERIFY RELATED REPAIR INFORMATION AVAILABILITY** • Check for related Service Bulletins and/or on-line repair information availability. • Is any related repair information available?	Yes	Perform the repair or diagnosis according to the available repair information. • If the vehicle is not repaired, go to the next step.
		No	Go to the next step.
3	**CLASSIFY OPEN CIRCUIT OR SHORT TO GROUND MALFUNCTION** • Disconnect the purge solenoid valve tube that is connected to the intake manifold. • Connect the vacuum pump to the purge solenoid valve. • Pump the vacuum pump several times and stop. • Wait **a few seconds**. • Is the vacuum maintained?	Yes	Go to Step 5.
		No	Go to the next step.

STEP	INSPECTION		ACTION
4	**INSPECT PASSAGE CONTROL OF PURGE SOLENOID VALVE** • Turn the ignition switch off. • Disconnect the purge solenoid valve connector. • Pump the vacuum pump several times and wait **a few seconds.** • Is the vacuum maintained?	Yes	Repair or replace the wiring harness for a short to ground, then go to Step 10.
		No	Replace the purge solenoid valve, then go to Step 10.
5	**INSPECT PURGE SOLENOID VALVE CONNECTOR FOR POOR CONNECTION** • Turn the ignition switch off. • Inspect for poor connection (damaged/pulled-out pins, corrosion, etc.). • Is there any malfunction?	Yes	Repair or replace the terminal, then go to Step 10.
		No	Go to the next step.
6	**INSPECT PURGE SOLENOID VALVE** • Perform the purge solenoid valve inspection. (See 01–16B–10 PURGE SOLENOID VALVE INSPECTION [L3 WITH TC].) • Is the purge solenoid valve normal?	Yes	Go to the next step.
		No	Replace the purge solenoid valve, then go to Step 10.
7	**INSPECT PURGE SOLENOID VALVE POWER SUPPLY CIRCUIT FOR OPEN CIRCUIT** • Turn ignition switch to the ON position (Engine off). • Measure the voltage between purge solenoid valve connector terminal A and body ground. • Is the voltage **B+**?	Yes	Go to the next step.
		No	Repair or replace the wiring harness for an open circuit, then go to Step 10.
8	**INSPECT PCM CONNECTOR FOR POOR CONNECTION** • Turn the ignition switch off. • Disconnect the PCM connector. • Inspect for poor connection (damaged/pulled-out pins, corrosion, etc.). • Is there any malfunction?	Yes	Repair or replace the terminal, then go to Step 10.
		No	Go to the next step.
9	**INSPECT PURGE SOLENOID VALVE CONTROL CIRCUIT** • Turn ignition switch to the ON position (Engine off). • Measure voltage between purge solenoid valve terminal B (harness-side) and body ground. • Is the voltage **B+**?	Yes	Repair or replace the wiring harness for a short to power supply, then go to the next step.
		No	Inspect for continuity between purge solenoid valve terminal B (harness-side) and PCM terminal 4T (harness-side). • If there is continuity, go to the next step. • If there is no continuity, repair or replace the wiring harness for an open circuit, then go to the next step.
10	**VERIFY TROUBLESHOOTING OF DTC P0443 COMPLETED** • Make sure to reconnect all disconnected connectors. • Clear the DTC from the PCM memory using the WDS or equivalent. • Turn the ignition switch off. • Start the engine and warm it up completely. • Is the PENDING CODE for this DTC present?	Yes	Replace PCM, then go to the next step. (See 01–40B–6 PCM REMOVAL/INSTALLATION [L3 WITH TC].)
		No	Go to the next step.
11	**VERIFY AFTER REPAIR PROCEDURE** • Perform the "After Repair Procedure". (See 01–02B–8 AFTER REPAIR PROCEDURE [L3 WITH TC].) • Are any DTCs present?	Yes	Go to the applicable DTC inspection. (See 01–02B–14 DTC TABLE [L3 WITH TC].)
		No	Troubleshooting completed.

DTC P0446 [L3 WITH TC]

E6U010200400W28

DTC P0446	Change over valve (COV) (EVAP system leak detection pump) stuck close
DETECTION CONDITION	• The PCM monitors the pump load current (EVAP line pressure), while the EVAP leak monitor is operating When the decrease in the pump load current is less than the specification after the reference current valu has been obtained, the PCM determines that the change over-valve (COV) in the EVAP system leak detection pump has a malfunction. **Diagnostic support note** • This is an intermittent monitor (CCM). • MIL illuminates if the PCM detects the above malfunction condition in two consecutive drive cycles or in one drive cycle while the DTC for the same malfunction has been stored in the PCM. • PENDING CODE is available if the PCM detects the above malfunction condition during the first drive cycle. • FREEZE FRAME DATA is available. • DTCs are stored in the PCM memory.
POSSIBLE CAUSE	• Damaged COV (in EVAP system leak detection pump.) • Short to the power circuit between the EVAP system leak detection pump terminal C and PCM terminal 3V • Damaged PCM

Diagnostic procedure

STEP	INSPECTION		ACTION
1	**VERIFY FREEZE FRAME DATA AND DIAGNOSTIC MONITORING TEST RESULTS HAVE BEEN RECORDED** • Have the FREEZE FRAME DATA and DIAGNOSTIC MONITORING TEST RESULTS (EVAP system related) been recorded?	Yes	Go to the next step.
		No	Record FREEZE FRAME DATA and DIAGNOSTIC MONITORING TEST RESULTS on the repair order, then go to the next step.
2	**VERIFY RELATED REPAIR INFORMATION AVAILABILITY** • Check for related Service Bulletins and/or on-line repair information availability. • Is any related repair information available?	Yes	Perform the repair or diagnostic according to the available repair information. • If the vehicle is not repaired, then go to the next step.
		No	Go to the next step.
3	**CHECK COV CONTROL (EVAP SYSTEM LEAK DETECTION PUMP CIRCUIT FOR SHORT TO POWER)** • Turn ignition switch to the ON position (engine OFF). • Disconnect the EVAP system leak detection pump connector. • Measure the voltage between EVAP system leak detection pump connector terminal C (wiring harness-side) and body ground. • Is the voltage **B+**?	Yes	Repair or replace the wiring harness, then go to Step 5.
		No	Go to the next step.
4	**INSPECT COV (EVAP SYSTEM LEAK DETECTION PUMP)** • Inspect the EVAP system leak detection pump. (See 01–16B–8 EVAPORATIVE EMISSION (EVAP) SYSTEM LEAK DETECTION PUMP INSPECTION [L3 WITH TC].) • Is the COV (EVAP system leak detection pump) normal?	Yes	Go to the next step.
		No	Replace the EVAP system leak detection pump, then go to the next step.
5	**VERIFY TROUBLESHOOTING OF DTC P0446 COMPLETED** • Make sure to reconnect all disconnected connectors. • Turn the ignition switch to the ON position (Engine off). • Clear the DTC from the PCM memory using the WDS or equivalent. • Perform the EVAP system test using the WDS or equivalent. (See 01–03B–94 Evaporative Emission (EVAP) System Leak Inspection.) • Is the same DTC present? **Note** • If the EVAP system test function is not available, preform the following procedure: — Perform "EVAP System Repair Verification Drive Mode". (See 01–02B–9 OBD-II DRIVE MODE [L3 WITH TC]) — Is the PENDING CODE for this DTC present?	Yes	Replace the PCM, then go to the next step.
		No	Go to the next step.
6	**VERIFY AFTER REPAIR PROCEDURE** • Perform the "AFTER REPAIR PROCEDURE". (See 01–02B–8 AFTER REPAIR PROCEDURE [L3 WITH TC].) • Are any DTCs present?	Yes	Go to the applicable DTC inspection. (See 01–02B–14 DTC TABLE [L3 WITH TC].)
		No	Troubleshooting completed.

DTC P0455 [L3 WITH TC]

E6U010200400W29

DTC P0455	Evaporative emission control system leak detected (gross leak)
DETECTION CONDITION	• PCM measures the pump load current (EVAP line pressure) when the specified period has passed after the EVAP system is sealed when monitoring conditions are met. If the load does not reach the reference current value within the specified period, the PCM determines that the EVAP system has a gross leak. **MONITORING CONDITION** — IG switch OFF — IAT: **5—35 °C {40—95 °F}** — Battery voltage: **11 V or above** — Atmospheric pressure: **72.2 kPa {542 mmHg, 21.3 inHg} or above** — Fuel tank level: **15—85%** — Time from engine off: **5 h 10 min** **Diagnostic support note** • This is an intermittent monitor (Evaporative emission system). • MIL illuminates if the PCM detects the above malfunction condition in two consecutive drive cycles or in one drive cycle while the DTC for the same malfunction has been stored in the PCM. • PENDING CODE is available if the PCM detects the above malfunction condition during the first drive cycle. • FREEZE FRAME DATA is available. • DTCs are stored in the PCM memory. • DIAGNOSTIC MONITORING TEST RESULT is available.
POSSIBLE CAUSE	• Purge solenoid valve malfunction • EVAP system leak detection pump malfunction • Loose, missing or defective fuel filler cap • Charcoal canister malfunction • Fuel tank malfunction • EVAP hose damaged or loose • Poor connection or damaged vacuum hose

Diagnostic procedure

STEP	INSPECTION		ACTION
1	**VERIFY FREEZE FRAME DATA AND DIAGNOSTIC MONITORING TEST RESULTS HAVE BEEN RECORDED** • Have the FREEZE FRAME DATA and DIAGNOSTIC MONITORING TEST RESULTS (Evaporative emission system related) been recorded?	Yes	Go to the next step.
		No	Record FREEZE FRAME DATA and DIAGNOSTIC MONITORING TEST RESULTS on the repair order, then go to the next step.
2	**VERIFY RELATED REPAIR INFORMATION AVAILABILITY** • Check for related Service Bulletins and/or on-line repair information availability. • Is any related repair information available?	Yes	Perform the repair or diagnosis according to the available repair information. • If the vehicle is not repaired, go to the next step.
		No	Go to the next step.
3	**VERIFY RELATED PENDING CODE OR STORED DTCS** • Turn the ignition switch to off then to the ON position (Engine off). • Verify related PENDING CODE or stored DTCs. • Are DTCs P0443 and/or P0446 present?	Yes	Go to the appropriate DTC troubleshooting procedure.
		No	Go to the next step.
4	**CLASSIFY INTERMITTENT CONCERN OR CONTINUOUS CONCERN** • Perform the Evaporative System Leak Inspection. (See 01–03B–94 Evaporative Emission (EVAP) System Leak Inspection.) • Does test result fail?	Yes	Go to the next step.
		No	Intermittent concern exists. Inspect the purge solenoid valve and the EVAP system leak detection pump circuit for an intermittent concern. (See 01–03B–6 INTERMITTENT CONCERN TROUBLESHOOTING [L3 WITH TC].)
5	**INSPECT FUEL FILLER CAP** • Verify that the fuel-filler cap is neither disconnected nor loose or damaged. • Is it normal? **Note** • When a fuel-filler cap other than an OEM cap is attached, it is considered a malfunction.	Yes	Go to the next step.
		No	Retighten the fuel-filler cap or replace it if it is damaged. Go to Step 18.

STEP	INSPECTION		ACTION
6	**INSPECT IF PURGE SOLENOID VALVE IS STUCK** • Inspect the purge solenoid valve. • Is the purge solenoid valve normal?	Yes	Go to the next step.
		No	Replace the purge solenoid valve, then go to Step 18.
7	**INSPECT COV (EVAP SYSTEM LEAK DETECTION PUMP)** • Inspect the EVAP system leak detection pump. • Is the COV (EVAP leak detection pump) normal?	Yes	Go to the next step.
		No	Replace the EVAP system leak detection pump, then go to Step 18.
8	**DETERMINE IF EVAP CONTROL SYSTEM FOR LEAKAGE OR BLOCKAGE** **Note** • If the evaporative emission tester is not available, then go to the next step. • Perform the Evaporative System Leak Inspection. (See 01–03B–94 Evaporative Emission (EVAP) System Leak Inspection.) • Does the system test fail?	Yes	Repair or replace malfunctioning area, then go to Step 18.
		No	Go to the next step.
9	**INSPECT LEAKAGE OF CHARCOAL CANISTER TO FUEL PUMP** • Disconnect the fuel tank side vacuum hose at the charcoal canister. • Apply vacuum **1.7 kPa {13 mmHg, 0.5 inHg}** to the disconnected vacuum hose using a vacuum pump. • Does the vacuum hold for a minimum of **2 min**?	Yes	Go to Step 13.
		No	Go to the next step.
10	**VERIFY POOR CONNECTION OF VACUUM HOSE** • Verify the vacuum hose installation condition between the fuel tank and the charcoal canister. • Is a poor connection detected?	Yes	Connect the vacuum hose correctly, then go to Step 18.
		No	Go to the next step
11	**INSPECT FUEL TANK INSTALLATION** • Remove the fuel tank. • Visually inspect for damage, insufficient sealing or poorly installed fuel pump unit. • Is it normal?	Yes	Go to the next step.
		No	Repair or replace the fuel tank or sealing, then go to Step 18.
12	**INSPECT FUEL TANK** • Inspect the fuel tank. • Is it normal?	Yes	Replace the vacuum hose from the charcoal canister to the fuel tank, then go to the next step.
		No	Replace the fuel tank, then go to the next step.
13	**INSPECT LEAKAGE FROM CHARCOAL CANISTER TO PURGE SOLENOID VALVE** • Disconnect the purge solenoid valve side vacuum hose at the charcoal canister. • Apply vacuum **3.3 kPa {25 mmHg, 1.0 inHg}** to the disconnected vacuum hose using a vacuum pump. • Does the vacuum hold for a minimum of **2 min**?	Yes	Go to Step 18.
		No	Go to the next step.
14	**VERIFY POOR CONNECTION OF VACUUM HOSE** • Verify the vacuum hose installation condition between the purge solenoid valve and the charcoal canister. • Is a poor connection detected?	Yes	Connect the vacuum hose correctly, then go to Step 18.
		No	Go to the next step.
5	**INSPECT PURGE SOLENOID VALVE FOR DAMAGE OR AIR LEAKAGE** • Remove the purge solenoid valve and inspect for damage and air leakage. • Is it normal?	Yes	Go to the next step.
		No	Replace the purge solenoid valve, then go to Step18.

STEP	INSPECTION		ACTION
16	**INSPECT CATCH TANK** • Remove the catch tank and inspect for clogging, damage and pinholes using a vacuum pump. • Is it normal?	Yes	Go to the next step.
		No	Replace the catch tank, then go to Step 18.
17	**INSPECT CHARCOAL CANISTER** • Remove the charcoal canister and inspect for clogging, damage and pinholes. • Is it normal?	Yes	Replace the vacuum hose from the charcoal canister to the purge solenoid valve, then go to the next step.
		No	Replace the charcoal canister, then go to the next step.
18	**PERFORM LEAK INSPECTION** • Connect all disconnected connectors. • Perform the Evaporative System Leak Inspection. (See 01–03B–94 Evaporative Emission (EVAP) System Leak Inspection.) • Does the test result fail?	Yes	Leakage still exists. Locate the leak point and repair. Then go to the next step.
		No	Go to the next step.
19	**VERIFY AFTER REPAIR PROCEDURE** • Perform the "AFTER REPAIR PROCEDURE". (See 01–02B–8 AFTER REPAIR PROCEDURE [L3 WITH TC].) • Are any DTCs present?	Yes	Go to the applicable DTC inspection. (See 01–02B–14 DTC TABLE [L3 WITH TC].)
		No	Troubleshooting completed.

DTC P0456 [L3 WITH TC]

E6U010200400W30

DTC P0456	Evaporative emission control system leak detected (very small leak)
DETECTION CONDITION	• PCM measures the pump load current (EVAP line pressure) when a specified period has passed after the EVAP system is sealed when monitoring conditions are met. If the load does not reach the reference load value or the rate of the load increase is lower than the specification within a specified period, the PCM determines that the EVAP system has a very small leak. **MONITORING CONDITION** — IG switch OFF — IAT: **5—35 °C {40—95 °F}** — Battery voltage: **11 V or above** — Atmospheric pressure: **72.2 kPa {542 mmHg, 21.3 inHg} or above** — Fuel tank level: **15—85%** — **5 h 10 min** elapsed from engine off: **Diagnostic support note** • This is an intermittent monitor (Evaporative system monitor). • MIL illuminates if the PCM detects the above malfunction condition in two consecutive drive cycles or in one drive cycle while the DTC for the same malfunction has been stored in the PCM. • PENDING CODE is available if the PCM detects the above malfunction condition during the first drive cycle. • FREEZE FRAME DATA is available. • DTCs are stored in the PCM memory. • DIAGNOSTIC MONITORING TEST RESULT is available.
POSSIBLE CAUSE	• Purge solenoid valve malfunction • EVAP system leak detection pump malfunction • Charcoal canister malfunction • Fuel cap malfunction • Fuel tank malfunction • Fuel pump unit poor seal • EVAP hose damaged or loose • EVAP pipe damaged

Diagnostic procedure

STEP	INSPECTION		ACTION
1	**VERIFY FREEZE FRAME DATA AND DIAGNOSTIC MONITORING TEST RESULTS HAVE BEEN RECORDED** • Have the FREEZE FRAME DATA and DIAGNOSTIC MONITORING TEST RESULTS (Evaporative emission system related) been recorded?	Yes	Go to the next step.
		No	Record FREEZE FRAME DATA and DIAGNOSTIC MONITORING TEST RESULTS on the repair order, then go to the next step.

STEP	INSPECTION		ACTION
2	**VERIFY RELATED REPAIR INFORMATION AVAILABILITY** • Check for related Service Bulletins and/or on-line repair information availability. • Is any related repair information available?	Yes	Perform the repair or diagnosis according to the available repair information. • If the vehicle is not repaired, go to the next step.
		No	Go to the next step.
3	**VERIFY RELATED PENDING CODE OR STORED DTCS** • Turn the ignition switch off then ON position (Engine off). • Verify related PENDING CODE or stored DTCs. • Are other DTC present?	Yes	Go to the appropriate DTC inspection.
		No	Go to the next step.
4	**CLASSIFY INTERMITTENT CONCERN OR CONTINUOUS CONCERN** • Perform the evaporative system leak inspection. (See 01–03B–94 Evaporative Emission (EVAP) System Leak Inspection.) • Does the system test result fail?	Yes	Go to the next step.
		No	Intermittent concern exists. Inspect the purge solenoid valve and the EVAP system leak detection pump circuit for an intermittent concern. (See 01–03B–6 INTERMITTENT CONCERN TROUBLESHOOTING [L3 WITH TC].)
5	**LOCATE LEAK POINT** • Check for leakage for the following using the Evaporative Emission Tester — Charcoal canister — Catch tank — Fuel filler cap — EVAP hoses and pipes — Fuel tank • Is leakage found?	Yes	Repair the leakage or replace the part, then go to Step 10.
		No	Go to the next step.
6	**INSPECT PURGE SOLENOID VALVE** • Inspect if the purge solenoid valve is stuck closed. (See 01–16B–10 PURGE SOLENOID VALVE INSPECTION [L3 WITH TC].) • Is the purge solenoid valve normal?	Yes	Go to the next step.
		No	Replace the purge solenoid valve, then go to Step 10.
7	**INSPECT EVAP SYSTEM LEAK DETECTION PUMP** • Connect all disconnected connectors and hoses. • Place a clamp on the EVAP system leak detection pump hose between the EVAP system leak detection pump and the air filter. • Perform the evaporative system leak inspection. (See 01–03B–94 Evaporative Emission (EVAP) System Leak Inspection.) • Does the test result fail?	Yes	Go to Step 9.
		No	Go to the next step.
8	**CONFIRM EVAP SYSTEM LEAK DETECTION PUMP LEAKAGE** • Remove the clamp. • Perform the evaporative system leak inspection. (See 01–03B–94 Evaporative Emission (EVAP) System Leak Inspection.) • Does the test result fail?	Yes	Replace the EVAP system leak detection pump, then go to Step 10.
		No	Go to the next step.
9	**INSPECT FUEL PUMP UNIT INSTALLATION** • Remove the fuel tank. • Visually inspect for damage, insufficient sealing or a poorly installed pump unit. • Is it normal?	Yes	Go to the next step.
		No	Repair or replace the fuel tank or sealing, then go to the next step.
10	**PERFORM LEAK INSPECTION** • Connect all disconnected connectors and hoses. • Perform the evaporative system leak inspection. (See 01–03B–94 Evaporative Emission (EVAP) System Leak Inspection.) • Does the test result fail?	Yes	Leakage still exists. Locate the leak point and repair. Then go to the next step.
		No	Go to next step
11	**VERIFY AFTER REPAIR PROCEDURE** • Perform the "After Repair Procedure". (See 01–02B–8 AFTER REPAIR PROCEDURE [L3 WITH TC].) • Are any DTCs present?	Yes	Go to the applicable DTC inspection. (See 01–02B–14 DTC TABLE [L3 WITH TC].)
		No	Troubleshooting completed.

DTC P0461 [L3 WITH TC]

E6U010200400W31

DTC P0461	Fuel gauge sender unit circuit range/performance
DETECTION CONDITION	• PCM monitors the fuel level voltage difference before and after the PCM-calculated fuel consumption has reached **25 L {26.4 US qt., 22 Imp qt.}**. If the difference is **5% less than** the PCM-calculated fuel consumption, the PCM determines that the fuel gauge sender unit range/performance is in error. **Diagnostic support note** • This is a continuous monitor (CCM). • MIL illuminates if the PCM detects above malfunction condition in two consecutive drive cycles or in one drive cycle while the DTC for the same malfunction has been stored in the PCM. • PENDING CODE is available if the PCM detects the above malfunction condition during the first drive cycle. • FREEZE FRAME DATA is available. • DTCs are stored in the PCM memory.
POSSIBLE CAUSE	• Fuel gauge sender unit malfunction or substandard performance • Instrument cluster malfunction • PCM malfunction

Diagnostic procedure

STEP	INSPECTION		ACTION
1	**VERIFY FREEZE FRAME DATA HAS BEEN RECORDED** • Has the FREEZE FRAME DATA been recorded?	Yes	Go to the next step.
		No	Record FREEZE FRAME DATA on the repair order, then go to the next step.
2	**VERIFY RELATED REPAIR INFORMATION AVAILABILITY** • Check for related Service Bulletins and/or on-line repair information availability. • Is any related repair information available?	Yes	Perform the repair or diagnosis according to the available repair information. • If the vehicle is not repaired, go to the next step.
		No	Go to the next step.
3	**INSPECT FUEL GAUGE SENDER UNIT** • Turn the ignition switch off. • Inspect the fuel gauge sender unit. (See 09–22–23 FUEL GAUGE SENDER UNIT INSPECTION [AWD].) • Is the fuel gauge sender unit normal?	Yes	Replace the PCM, then go to the next step.
		No	Repair or replace the fuel gauge sender unit, then go to the next step.
4	**VERIFY AFTER REPAIR PROCEDURE** • Perform the "After Repair Procedure". (See 01–02B–8 AFTER REPAIR PROCEDURE [L3 WITH TC].) • Are any DTCs present?	Yes	Go to the applicable DTC inspection. (See 01–02B–14 DTC TABLE [L3 WITH TC].)
		No	Troubleshooting completed.

DTC P0462 [L3 WITH TC]

E6U010200400W32

DTC P0462	Fuel gauge sender unit circuit low input
DETECTION CONDITION	• The PCM monitors the signals of the fuel level and fuel gauge sender unit output voltage from the instrument cluster. If the PCM detects that the fuel level or fuel gauge sender unit output voltage is too low, the PCM determines that the fuel gauge sender unit circuit has a malfunction. **Diagnostic support note** • This is a continuous monitor (CCM). • MIL illuminates if the PCM detects above malfunction condition in two consecutive drive cycles or in one drive cycle while the DTC for the same malfunction has been stored in the PCM. • PENDING CODE is available if the PCM detects the above malfunction condition during the first drive cycle. • FREEZE FRAME DATA is available. • DTCs are stored in the PCM memory.
POSSIBLE CAUSE	• Instrument cluster malfunction • Fuel gauge sender unit malfunction • PCM malfunction

Diagnostic procedure

STEP	INSPECTION		ACTION
1	**VERIFY FREEZE FRAME DATA HAS BEEN RECORDED** • Has the FREEZE FRAME DATA been recorded?	Yes	Go to the next step.
		No	Record FREEZE FRAME DATA on the repair order, then go to the next step.
2	**VERIFY RELATED REPAIR INFORMATION AVAILABILITY** • Check for related Service Bulletins and/or on-line repair information availability. • Is any related repair information available?	Yes	Perform the repair or diagnosis according to the available repair information. • If the vehicle is not repaired, go to the next step.
		No	Go to the next step.
3	**INSPECT INSTRUMENT CLUSTER** • Perform the "INSTRUMENT CLUSTER INPUT/OUTPUT CHECK MODE" procedure. (See 09–22–7 INSTRUMENT CLUSTER INPUT/OUTPUT CHECK MODE.) • Is there any malfunction?	Yes	Repair or replace the suspected malfunction, then go to Step 4.
		No	Go to the next step.
4	**VERIFY TROUBLESHOOTING OF DTC P0462 COMPLETED** • Make sure to reconnect all disconnected connectors. • Turn ignition switch to the ON position (Engine off). • Clear the DTC from the memory using the WDS or equivalent. • Start the engine. • Is the PENDING CODE for this DTC present?	Yes	Replace PCM, then go to the next step.
		No	Go to the next step.
5	**VERIFY AFTER REPAIR PROCEDURE** • Perform the "After Repair Procedure". (See 01–02B–8 AFTER REPAIR PROCEDURE [L3 WITH TC].) • Are any DTCs present?	Yes	Go to the applicable DTC inspection. (See 01–02B–14 DTC TABLE [L3 WITH TC].)
		No	Troubleshooting completed.

DTC P0463 [L3 WITH TC]

E6U010200400W33

DTC P0463	Fuel gauge sender unit circuit high input
DETECTION CONDITION	• The PCM monitors the signals of the fuel level and fuel gauge sender unit output voltage from the instrument cluster. If the PCM detects that the fuel level or fuel gauge sender unit output voltage is too high the PCM determines that the fuel gauge sender unit circuit has a malfunction. **Diagnostic support note** • This is a continuous monitor (CCM). • MIL illuminates if the PCM detects the above malfunction condition in two consecutive drive cycles or in one drive cycle while the DTC for the same malfunction has been stored in the PCM. • PENDING CODE is available if the PCM detects the above malfunction condition during the first drive cycle. • FREEZE FRAME DATA is available. • DTCs are stored in the PCM memory.
POSSIBLE CAUSE	• Instrument cluster malfunction • Fuel gauge sender unit malfunction • PCM malfunction

Diagnostic procedure

STEP	INSPECTION		ACTION
1	**VERIFY FREEZE FRAME DATA HAS BEEN RECORDED** • Has the FREEZE FRAME DATA been recorded?	Yes	Go to the next step.
		No	Record FREEZE FRAME DATA on the repair order, then go to the next step.
2	**VERIFY RELATED REPAIR INFORMATION AVAILABILITY** • Check for related Service Bulletins and/or on-line repair information availability. • Is any related repair information available?	Yes	Perform the repair or diagnosis according to the available repair information. • If the vehicle is not repaired, go to the next step.
		No	Go to the next step.
3	**INSPECT INSTRUMENT CLUSTER** • Perform "INSTRUMENT CLUSTER INPUT/OUTPUT CHECK MODE" procedure. (See 09–22–7 INSTRUMENT CLUSTER INPUT/OUTPUT CHECK MODE.) • Is there any malfunction?	Yes	Repair or replace the suspected malfunction, then go to Step 4.
		No	Go to the next step.
4	**VERIFY TROUBLESHOOTING OF DTC P0463 COMPLETED** • Make sure to reconnect all disconnected connectors. • Turn ignition switch to the ON position (Engine off). • Clear the DTC from the memory using the WDS or equivalent. • Start the engine. • Is the PENDING CODE for this DTC present?	Yes	Replace the PCM, then go to the next step.
		No	Go to the next step.
5	**VERIFY AFTER REPAIR PROCEDURE** • Perform the "After Repair Procedure". (See 01–02B–8 AFTER REPAIR PROCEDURE [L3 WITH TC].) • Are any DTCs present?	Yes	Go to the applicable DTC inspection. (See 01–02B–14 DTC TABLE [L3 WITH TC].)
		No	Troubleshooting completed.

DTC P0480 [L3 WITH TC]

E6U010200400W34

DTC P0480	Fan control circuit problem
DETECTION CONDITION	• The PCM monitors the input voltage from the fan control module. If the voltage remains low or high, the PCM determines that the fan control circuit has a malfunction. **Diagnostic support note** • This is a continuous monitor (Other). • The MIL does not illuminate. • FREEZE FRAME DATA is not available. • The DTC is stored in the PCM memory.
POSSIBLE CAUSE	• Fan control module malfunction • Connector or terminal malfunction • Short to the power supply in the wiring harness between fan control module terminal 1B and PCM terminal 4A • Short to ground in the wiring harness between fan control module terminal 1B and PCM terminal 4A • Open circuit in the wiring harness between fan control module terminal 1B and PCM terminal 4A • PCM malfunction

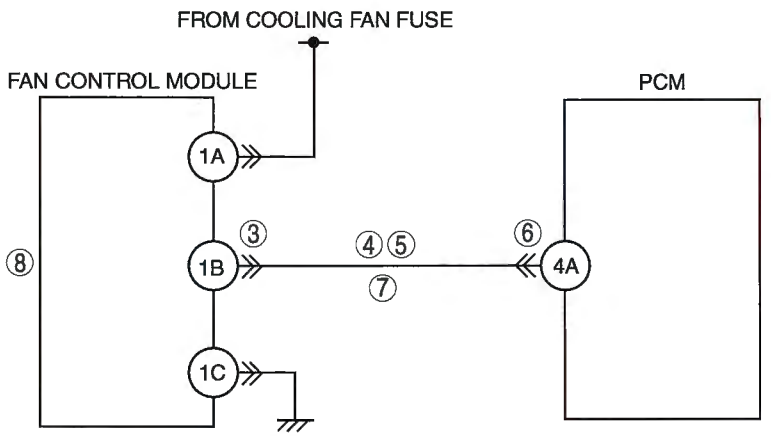

FAN CONTROL MODULE
WIRING HARNESS-SIDE CONNECTOR



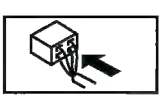

PCM
WIRING HARNESS-SIDE CONNECTOR

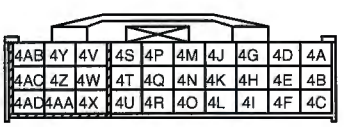

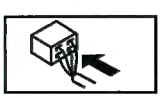

Diagnostic procedure

STEP	INSPECTION		ACTION
1	**VERIFY FREEZE FRAME DATA HAS BEEN RECORDED** • Has the FREEZE FRAME DATA been recorded?	Yes	Go to the next step.
		No	Record the FREEZE FRAME DATA on the repair order, then go to the next step.
2	**VERIFY RELATED REPAIR INFORMATION AVAILABILITY** • Verify related service Bulletins and/or on-line repair information availability. • Is any related repair information available?	Yes	Perform the repair or diagnosis according to the available repair information. • If the vehicle is not repaired, go to the next step.
		No	Go to the next step.
3	**INSPECT FAN CONTROL MODULE CONNECTOR FOR POOR CONNECTION** • Turn the ignition switch off. • Disconnect the fan control module connector. • Inspect for poor connection (such as damaged/ pulled-out pins, corrosion). • Is there any malfunction?	Yes	Repair or replace the terminal, then go to Step 9.
		No	Go to the next step.
4	**INSPECT FAN CONTROL MODULE SIGNAL CIRCUIT FOR SHORT TO POWER SUPPLY** • Turn the ignition switch to the ON position (Engine off). • Measure the voltage between fan control module terminal 1B (wiring harness-side) and body ground. • Is the voltage **B+**?	Yes	Repair or replace the wiring harness for an open circuit, then go to Step 9.
		No	Go to the next step.
5	**INSPECT FAN CONTROL MODULE SIGNAL CIRCUIT FOR SHORT TO GROUND** • Turn the ignition switch off. • Inspect for continuity between fan control module terminal 1B (wiring harness-side) and body ground. • Is there continuity?	Yes	Repair or replace the wiring harness for an open circuit, then go to Step 9.
		No	Go to the next step.
6	**INSPECT PCM CONNECTOR FOR POOR CONNECTION** • Inspect for poor connection (such as damaged/ pulled-out pins, corrosion). • Is there any malfunction?	Yes	Repair or replace the terminal, then go to Step 9.
		No	Go to the next step.
7	**INSPECT FAN CONTROL MODULE SIGNAL CIRCUIT FOR OPEN CIRCUIT** • Inspect for continuity between fan control module terminal 1B (wiring harness-side) and PCM terminal 4A. • Is there continuity?	Yes	Go to the next step.
		No	Repair or replace the wiring harness for an open circuit, then go to Step 9.
8	**INSPECT FAN CONTROL MODULE** • Perform the fan control module inspection. (See 01–03B–92 Cooling Fan Control System Inspection.) • Is the fan control module normal?	Yes	Go to the next step.
		No	Replace the fan control module, then go to the next step.
9	**VERIFY TROUBLESHOOTING OF DTC P0480 COMPLETED** • Clear the DTC from the PCM memory using the WDS or equivalent. • Start the engine. • Turn A/C switch to ON. • Is the same DTC present?	Yes	Replace the PCM, then go to the next step. (See 01–40B–6 PCM REMOVAL/INSTALLATION [L3 WITH TC].)
		No	Go to the next step.
10	**VERIFY AFTER REPAIR PROCEDURE** • Perform the "AFTER REPAIR PROCEDURE". (See 01–02B–8 AFTER REPAIR PROCEDURE [L3 WITH TC].) • Are any DTCs present?	Yes	Go to the applicable DTC inspection. (See 01–02B–14 DTC TABLE [L3 WITH TC].)
		No	Troubleshooting completed.

DTC P0500 [L3 WITH TC]

E6U010200500W09

DTC P0500	Vehicle speed sensor (VSS) circuit malfunction
DETECTION CONDITION	• Wheel speed signal from the DSC HU/CM is **below 3.7 km/h {2.3 mph}** when the following conditions are met: — Neutral switch and CPP switch are off — Load is above **40%** — Engine speed is **2,000 rpm or above** — Brake switch is OFF **Diagnostic support note** • This is a continuous monitor (CCM). • MIL illuminates if the PCM detects the above malfunction condition in two consecutive drive cycles or in one drive cycle while the DTC for the same malfunction has been stored in the PCM. • PENDING CODE is available if the PCM detects the above malfunction condition during the first drive cycle. • FREEZE FRAME DATA is available. • DTCs are stored in PCM memory.
POSSIBLE CAUSE	• Front ABS wheel-speed sensor malfunction • DSC malfunction • Connector or terminal malfunction • PCM malfunction

Diagnostic procedure

STEP	INSPECTION		ACTION
1	**VERIFY FREEZE FRAME DATA HAS BEEN RECORDED** • Has the FREEZE FRAME PID DATA been recorded?	Yes	Go to the next step.
		No	Record FREEZE FRAME PID DATA on the repair order, then go to the next step.
2	**VERIFY RELATED SERVICE INFORMATION AVAILABILITY** • Check for related Service Information availability. • Is any related Service Information available?	Yes	Perform the repair or diagnosis according to available Service Information. • If the vehicle is not repaired, go to the next step.
		No	Go to the next step.
3	**VERIFY STORED DTC IN DSC HU/CM** • Turn the ignition switch to the ON position (Engine off). • Verify stored DTCs in the DSC HU/CM. (See04–02B–3 DSC ON-BOARD DIAGNOSIS.) • Are DTCs stored?	Yes	Go to the appropriate DTC inspection. (See04–02B–4 DTC Table.)
		No	Go to the next step.
4	**VERIFY TROUBLESHOOTING OF DTC P0500 COMPLETED** • Make sure to reconnect all disconnected connectors. • Turn ignition switch to the ON position (Engine off). • Clear the DTC from the PCM memory using the WDS or equivalent. • Warm up the engine. • Access the RPM and LOAD PID using the WDS or equivalent. • Drive the vehicle under the following conditions for **18s**. — Engine speed: **2,000 rpm or above** — Gear: Gear is in other than NEUTRAL — Load: **40% or above** • Is the PENDING CODE for this DTC present?	Yes	Replace the PCM, then go to the next step. (See 01–40B–6 PCM REMOVAL/INSTALLATION [L3 WITH TC].)
		No	Go to the next step.
5	**VERIFY AFTER REPAIR PROCEDURE** • Perform the "After Repair Procedure". (See 01–02B–8 AFTER REPAIR PROCEDURE [L3 WITH TC].) • Are any DTCs present?	Yes	Go to the applicable DTC troubleshooting. (See 01–02B–14 DTC TABLE [L3 WITH TC].)
		No	Troubleshooting completed.

DTC P0505 [L3 WITH TC]

E6U01020C500V10

DTC P0505	IAC system problem
DETECTION CONDITION	• The PCM cannot control idle speed toward the target idle speed during the KOER self test.
POSSIBLE CAUSE	• Air cleaner element clogged • Air intake passage clogged • A/C relay control circuit malfunction • Generator control circuit malfunction • Low engine compression (Over capacity of blow-by gas) • Electronic throttle control system improper operation • PCM malfunction

Diagnostic procedure

STEP	INSPECTION		ACTION
1	**VERIFY RELATED REPAIR INFORMATION AVAILABILITY** • Check for related Service Bulletins and/or on-line repair information availability. • Is any related repair information available?	Yes	Perform the repair or diagnosis according to the available repair information. • If the vehicle is not repaired, go to the next step.
		No	Go to the next step.
2	**VERIFY RELATED PENDING OR STORED DTCs** • Turn the ignition switch off then to the ON position. (Engine off) • Verify pending code or stored DTCs using the WDS or equivalent. • Are DTCs P0506, P0507, P0638, P2100, P2101, P2102, P2103, P2108, or P2119 present?	Yes	Perform the applicable DTC troubleshooting. (See 01–02B–14 DTC TABLE [L3 WITH TC].)
		No	Go to the next step.
3	**VERIFY ELECTRONIC THROTTLE CONTROL SYSTEM OPERATION** • Perform the TP sweep inspection. (See01–03B–85 Throttle position (TP) sweep inspection.) • Does the electronic throttle control system work properly?	Yes	Go to the next step.
		No	Repair or replace the malfunctioning part according to the inspection result. Then go to Step 9.
4	**INSPECT A/C MAGNETIC CLUTCH OPERATION** **Note** • The following test should be performed for vehicles with A/C. Go to the next step for vehicles without A/C • Turn the fan switch off. • Is the magnetic clutch still on?	Yes	Go to "A/C ALWAYS ON / A/C COMPRESSOR RUNS CONTINUOUSLY." of ENGINE SYMPTOM TROUBLESHOOTING then go to Step 9. (See 01–03B–9 ENGINE SYMPTOM TROUBLESHOOTING [L3 WITH TC].)
		No	Go to the next step.
5	**INSPECT GENERATOR CONTROL CIRCUIT MALFUNCTION** • Apply electrical load. • Does the engine speed increase?	Yes	Go to the next step.
		No	Repair for a short to the power supply in the generator control circuit, then go to Step 9.
6	**INSPECT AIR CLEANER ELEMENT** • Remove the air cleaner element with the engine running. • Does the engine speed increase?	Yes	Clean or replace the air cleaner element, then go to Step 9.
		No	Go to the next step.
7	**INSPECT THROTTLE BODY PASSAGE** • Is the throttle body clogged?	Yes	Clean or replace the throttle body passage, then go to Step 9.
		No	Go to the next step.
8	**INSPECT ENGINE COMPRESSION** • Inspect the engine compression. (See 01–10B–9 COMPRESSION INSPECTION [L3 WITH TC].) • Is the engine compression normal?	Yes	Go to the next step.
		No	Overhaul the engine, then go to the next step.
9	**VERIFY TROUBLESHOOTING OF DTC P0505 COMPLETED** • Make sure to reconnect all disconnected connectors. • Clear the DTC using the WDS or equivalent. • Perform the KOER Self-Test. • Is the same DTC present?	Yes	Replace the PCM, then go to the next step. (See 01–40B–6 PCM REMOVAL/INSTALLATION [L3 WITH TC].)
		No	Go to the next step.
10	**VERIFY AFTER REPAIR PROCEDURE** • Perform the "AFTER REPAIR PROCEDURE". (See 01–02B–8 AFTER REPAIR PROCEDURE [L3 WITH TC].) • Are any DTCs present?	Yes	Go to the applicable DTC troubleshooting. (See 01–02B–14 DTC TABLE [L3 WITH TC].)
		No	Troubleshooting completed.

DTC P0506 [L3 WITH TC]

E6U010200500W11

DTC P0506	Idle control system RPM lower than expected
DETECTION CONDITION	• Actual idle speed is lower than expected by **100 rpm** for **14 s** when the brake pedal is depressed (brake switch is on) and the steering wheel is held straight ahead (power steering pressure switch is off). **Note** • If the atmospheric pressure is **less than 72.3 kPa {542 mmHg, 21.3 inHg}** or the intake air temperature is **below –10 °C {14 °F}**, the PCM cancels the diagnosis of P0506. **Diagnostic support note** • This is a continuous monitor (CCM). • MIL illuminates if the PCM detects the above malfunction condition in two consecutive drive cycles or in one drive cycle while the DTC for the same malfunction has been stored in the PCM. • PENDING CODE is available if PCM detects the above malfunction condition during the first drive cycle. • FREEZE FRAME DATA is available. • DTCs are stored in PCM memory.
POSSIBLE CAUSE	• Electronic throttle control system malfunction • Air cleaner element clogged • Air intake passage clogged • A/C relay control circuit malfunction • Generator malfunction • Purge solenoid valve malfunction • Low engine compression (Over capacity of blow-by gas) • PCM malfunction

Diagnostic procedure

STEP	INSPECTION		ACTION
1	**VERIFY FREEZE FRAME DATA HAS BEEN RECORDED** • Has the FREEZE FRAME DATA been recorded?	Yes	Go to the next step.
		No	Record FREEZE FRAME DATA on the repair order, then go to the next step.
2	**VERIFY RELATED SERVICE INFORMATION AVAILABILITY** • Check for related Service Bulletins and/or on-line repair information availability. • Is any related repair information available?	Yes	Perform the repair or diagnosis according to the available repair information. • If the vehicle is not repaired, then go to the next step.
		No	Go to the next step.
3	**VERIFY RELATED PENDING OR STORED DTCS** • Turn ignition switch to OFF, then ON (Engine off). • Verify pending code or stored DTCs using the WDS or equivalent. • Are other DTCs present?	Yes	Repair the applicable DTCs. (See 01–02B–14 DTC TABLE [L3 WITH TC].)
		No	Go to the next step.
4	**INSPECT A/C MAGNET CLUTCH OPERATION** • Turn the blower motor switch off. • Is the magnet clutch still on?	Yes	Refer to "A/C is always on or A/C compressor runs continuously." of ENGINE SYMPTOM TROUBLESHOOTING, then go to Step 10. (See 01–03B–71 NO.24 A/C IS ALWAYS ON OR A/C COMPRESSOR RUNS CONTINUOUSLY [L3 WITH TC].)
		No	Go to the next step.
5	**INSPECT ELECTRONIC THROTTLE CONTROL SYSTEM MALFUNCTION** • Inspect the following parts: — APP sensor (See 01–40B–26 ACCELERATOR PEDAL POSITION (APP) SENSOR INSPECTION [L3 WITH TC].) — TP sensor (See 01–40B–27 THROTTLE POSITION (TP) SENSOR INSPECTION [L3 WITH TC].) • Are they normal?	Yes	Go to the next step.
		No	Replace the necessary parts, then go to Step 10.
6	**INSPECT PURGE SOLENOID VALVE MALFUNCTION** • Perform the purge solenoid valve inspection. (See 01–16B–10 PURGE SOLENOID VALVE INSPECTION [L3 WITH TC].) • Is the purge solenoid valve normal?	Yes	Go to the next step.
		No	Replace the purge solenoid valve, then go to Step 10.
7	**INSPECT AIR CLEANER ELEMENT** • Remove the air cleaner element with the engine running. • Does the engine speed increase?	Yes	Replace the air cleaner element, then go to Step 10.
		No	Go to the next step.
8	**INSPECT ENGINE COMPRESSION** • Inspect the engine compression. (See 01–10B–9 COMPRESSION INSPECTION [L3 WITH TC].) • Is the engine compression normal?	Yes	Go to the next step.
		No	Overhaul the engine, then go to Step 10.
9	**INSPECT GENERATOR** • Perform the generator inspection. (See 01–17B–6 GENERATOR INSPECTION [L3 WITH TC].) • Is the generator normal?	Yes	Go to the next step.
		No	Repair or replace the related part, then go to the next step.
10	**VERIFY TROUBLESHOOTING OF DTC P0506 COMPLETED** • Make sure to reconnect all disconnected connectors. • Start the engine. • Clear the DTC from the PCM memory using the WDS or equivalent. • Depress the brake pedal for **14 s or more.** • Is PENDING CODE for this DTC present?	Yes	Replace the PCM, then go to the next step.
		No	Go to the next step.
11	**VERIFY AFTER REPAIR PROCEDURE** • Perform the "After Repair Procedure". (See 01–02B–8 AFTER REPAIR PROCEDURE [L3 WITH TC].) • Are any DTCs present?	Yes	Go to the applicable DTC inspection. (See 01–02B–14 DTC TABLE [L3 WITH TC].)
		No	Troubleshooting completed.

DTC P0507 [L3 WITH TC]

E6U010200500W12

DTC P0507	Idle control system RPM higher than expected
DETECTION CONDITION	• Actual idle speed is higher than expected by **200 rpm** for **14 s** when the brake pedal is depressed (brake switch is on) and steering wheel is held straight ahead (power steering pressure switch is off). **Note** • If the atmospheric pressure is **less than 72.3 kPa {542 mmHg, 21.3 inHg}** or the intake air temperature is **below –10 °C {14 °F}**, the PCM cancels diagnosis of P0507. **Diagnostic support note** • This is a continuous monitor (CCM). • MIL illuminates if the PCM detects the above malfunction condition in two consecutive drive cycles or in one drive cycle while the DTC for the same malfunction has been stored in the PCM. • PENDING CODE is available if the PCM detects the above malfunction condition during the first drive cycle. • FREEZE FRAME DATA is available. • DTCs are stored in PCM memory.
POSSIBLE CAUSE	• Electronic throttle control system malfunction • Vacuum hose misconnection • PCM malfunction

Diagnostic procedure

STEP	INSPECTION		ACTION
1	**VERIFY FREEZE FRAME DATA HAS BEEN RECORDED** • Has the FREEZE FRAME DATA been recorded?	Yes	Go to the next step.
		No	Record FREEZE FRAME DATA on the repair order, then go to the next step.
2	**VERIFY RELATED SERVICE INFORMATION AVAILABILITY** • Check for related Service Bulletins and/or on-line repair information availability. • Is any related repair information available?	Yes	Perform the repair or diagnosis according to the available repair information. • If the vehicle is not repaired, then go to the next step.
		No	Go to the next step.
3	**VERIFY RELATED PENDING OR STORED DTCS** • Turn ignition switch to off, then ON position (Engine off). • Verify pending code or stored DTCs using the WDS or equivalent. • Are other DTCs present?	Yes	Repair applicable DTCs. (See 01–02B–14 DTC TABLE [L3 WITH TC].)
		No	Go to the next step.
4	**INSPECT VACUUM HOSE CONNECTION** • Are the vacuum hoses connecting accurately? (See 01–13B–4 VACUUM HOSE ROUTING DIAGRAM [L3 WITH TC].)	Yes	Go to the next step.
		No	Reconnect the vacuum hoses correctly, then go to step 6.
5	**INSPECT ELECTRONIC THROTTLE CONTROL SYSTEM MALFUNCTION** • Inspect the following parts: — APP sensor (See 01–40B–26 ACCELERATOR PEDAL POSITION (APP) SENSOR INSPECTION [L3 WITH TC].) — TP sensor (See 01–40B–27 THROTTLE POSITION (TP) SENSOR INSPECTION [L3 WITH TC].) • Are they normal?	Yes	Go to the next step.
		No	Replace the necessary parts, then go to the next step.
6	**VERIFY TROUBLESHOOTING OF DTC P0507 COMPLETED** • Make sure to reconnect all disconnected connectors. • Start the engine. • Clear the DTC from the PCM memory using the WDS or equivalent. • Depress the brake pedal for **14 s or more.** • Is the PENDING CODE for this DTC present?	Yes	Replace the PCM, then go to the next step.
		No	Go to the next step.
7	**VERIFY AFTER REPAIR PROCEDURE** • Perform the "After Repair Procedure". (See 01–02B–8 AFTER REPAIR PROCEDURE [L3 WITH TC].) • Are any DTCs present?	Yes	Go to the applicable DTC inspection. (See 01–02B–14 DTC TABLE [L3 WITH TC].)
		No	Troubleshooting completed.

DTC P0550 [L3 WITH TC]

E6U010200500W13

DTC P0550	PSP switch circuit malfunction
DETECTION CONDITION	• The PCM monitors the PSP switch signal, If the input voltage is low voltage (switch stays on) for **1 min.** when the VSS is **above 60.0 km/h {37.4 mph}** and the ECT is **above 60 °C {140 °F}**, the PCM determine that the PSP switch circuit has a malfunction. **Diagnostic support note** • This is a continuous monitor (CCM). • MIL illuminates if the PCM detects the above malfunction condition in two consecutive drive cycles or in one drive cycle while the DTC for the same malfunction has been stored in the PCM. • PENDING CODE is available if the PCM detects the above malfunction condition during the first drive cycle. • FREEZE FRAME DATA is available. • DTCs are stored in PCM memory.
POSSIBLE CAUSE	• PSP switch malfunction • Connector or terminal malfunction • Short to ground in the wiring harness between the PSP switch terminal and PCM terminal 1Z • Open circuit in the wiring harness between the PSP switch terminal and PCM terminal 1Z • PCM malfunction

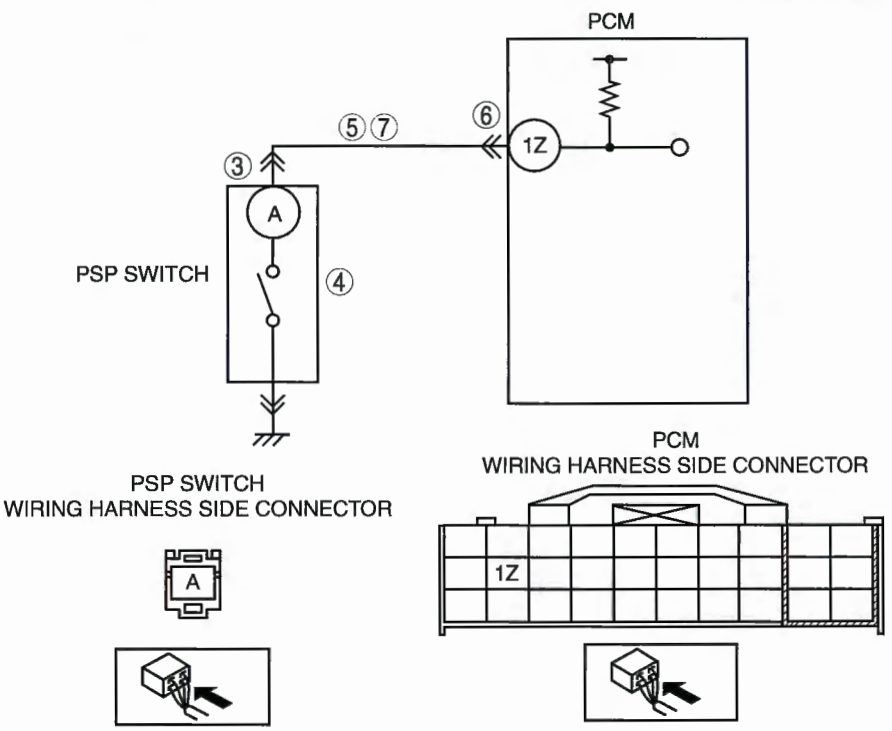

Diagnostic procedure

STEP	INSPECTION		ACTION
1	**VERIFY FREEZE FRAME DATA HAS BEEN RECORDED** • Has the FREEZE FRAME DATA been recorded?	Yes	Go to the next step.
		No	Record FREEZE FRAME DATA on the repair order, then go to the next step.
2	**VERIFY RELATED REPAIR INFORMATION AVAILABILITY** • Check for related Service Bulletins and/or on-line repair formation availability. • Is any related repair information available?	Yes	Perform the repair or diagnosis according to the available repair information. • If the vehicle is not repaired, go to the next step.
		No	Go to the next step.
3	**INSPECT PSP CONNECTOR FOR POOR CONNECTION** • Turn the ignition switch off. • Disconnect the PSP connector. • Inspect for poor connection (such as damaged/ pulled-out pins, corrosion). • Is there any malfunction?	Yes	Repair or replace the terminal, then go to Step 8.
		No	Go to the next step.
4	**INSPECT PSP SWITCH** • Perform the PSP switch inspection. (See 01–40B–24 POWER STEERING PRESSURE (PSP) SWITCH INSPECTION [L3 WITH TC].) • Is the PSP switch normal?	Yes	Go to the next step.
		No	Replace the PSP switch, then go to Step 8.
5	**INSPECT PSP SWITCH SIGNAL CIRCUIT FOR SHORT TO GROUND** • Disconnect the PCM connector. • Inspect for continuity between the PSP switch terminal (harness-side) and body ground. • Is there continuity?	Yes	Repair or replace the wiring harness for a short to ground, then go to Step 8.
		No	Go to the next step.
6	**INSPECT PCM CONNECTOR FOR POOR CONNECTION** • Turn ignition switch to OFF • Disconnect the PCM connector. • Inspect for poor connection (such as damaged/ pulled-out pins, corrosion). • Is there any malfunction?	Yes	Repair the terminal, then go to Step 8.
		No	Go to the next step.
7	**INSPECT SIGNAL CIRCUIT MALFUNCTION FOR OPEN CIRCUIT** • Inspect for continuity between PSP terminal A (harness-side) and PCM terminal 1Z (harness-side). • Is there continuity?	Yes	Repair or replace the wiring harness, then go to the next step.
		No	Go to the next step.
8	**VERIFY TROUBLESHOOTING OF DTC P0550 COMPLETED** • Make sure to reconnect all disconnected connectors. • Start the engine. • Clear the DTC from the PCM memory using the WDS or equivalent. • Drive the vehicle **above 60 km/h {37.3 mph}** for **1 min.** • Verify that the ECT PID is **above 60 °C {140 °F}** using the WDS or equivalent. • Is the PENDING CODE for this DTC present?	Yes	Replace PCM, then go to the next step. (See 01–40B–6 PCM REMOVAL/INSTALLATION [L3 WITH TC].)
		No	Go to the next step.
9	**VERIFY AFTER REPAIR PROCEDURE** • Perform the "After Repair Procedure". (See 01–02B–8 AFTER REPAIR PROCEDURE [L3 WITH TC].) • Are any DTCs present?	Yes	Go to the applicable DTC inspection. (See 01–02B–14 DTC TABLE [L3 WITH TC].)
		No	Troubleshooting completed.

DTC P0564 [L3 WITH TC]

E6U010200500W14

DTC P0564	Cruise control switch circuit malfunction
DETECTION CONDITION	• The PCM monitors the cruise control switch signal. If the PCM detects that any one of following switches (Main, CANCEL, SET/COAST, RESUME/ACCEL) remains on for **2 min**, the PCM determines that the cruise control switch circuit has a malfunction. **Diagnostic support note** • This is a continuous monitor (Other). • MIL does not illuminate. • FREEZE FRAME DATA is not available. • DTCs are stored in PCM memory.
POSSIBLE CAUSE	• Cruise control switch malfunction • Connector or terminal malfunction • Short to power circuit in wiring harness from cruise control switch terminal 2and PCM terminal 3S • Short to ground circuit in wiring harness from cruise control switch terminal 2and PCM terminal 3S • PCM malfunction

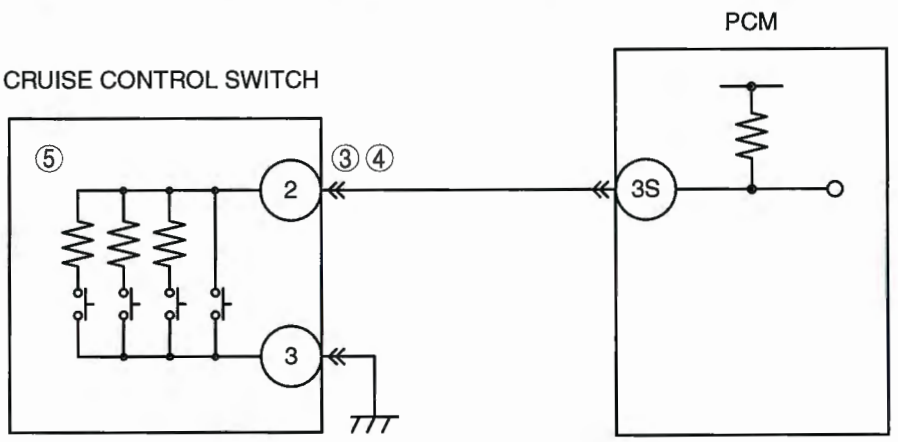

CRUISE CONTROL SWITCH
WIRING HARNESS-SIDE CONNECTOR

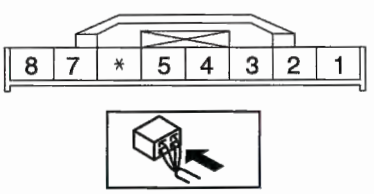

PCM
WIRING HARNESS-SIDE CONNECTOR

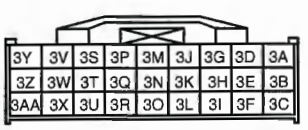

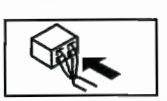

Diagnostic procedure

STEP	INSPECTION		ACTION
1	**VERIFY RELATED REPAIR INFORMATION AVAILABILITY** • Check for related Service Bulletins and/or on-line repair information availability. • Is any related repair information available?	Yes	Perform the repair or diagnosis according to the available repair information. • If the vehicle is not repaired, go to the next step.
		No	Go to the next step.
2	**INSPECT CRUISE CONTROL SWITCH CONNECTOR FOR POOR CONNECTION** • Turn the ignition switch off. • Inspect for poor connection (such as damaged/ pulled-out pins, corrosion). • Is there any malfunction?	Yes	Repair or the replace the terminal, then go to Step 6.
		No	Go to the next step.
3	**INSPECT CRUISE CONTROL SWITCH SIGNAL CIRCUIT FOR SHORT TO GROUND** • Disconnect the cruise control switch and PCM connectors. • Inspect for continuity between cruise control switch terminal 2 (wiring harness-side) and body ground. • Is there continuity?	Yes	Repair or replace for a short to ground, then go to Step 6.
		No	Go to the next step.
4	**INSPECT CRUISE CONTROL SWITCH SIGNAL CIRCUIT FOR SHORT TO POWER** • Turn the ignition switch to the ON position (Engine off). • Inspect the voltage between cruise control switch terminal 2 (wiring harness-side) and body ground. • Is the voltage **below 1.0 V**?	Yes	Go to the next step.
		No	Repair or replace for a short to the power supply, then go to Step 6.
5	**INSPECT CRUISE CONTROL SWITCH OPERATION** • Inspect the cruise control switch. (See 01–20B–1 CRUISE CONTROL SWITCH INSPECTION [L3 WITH TC].) • Is the cruise control switch normal?	Yes	Go to the next step.
		No	Replace the cruise control switch, then go to the next step.
6	**VERIFY TROUBLESHOOTING OF P0564 COMPLETED** • Make sure to reconnect all disconnected connectors. • Clear the DTC from the PCM memory using the WDS or equivalent. • Drive the vehicle using cruise control for **2 min. or more.** • Is the same DTC present?	Yes	Replace the PCM, then go to the next step. (See 01–40B–6 PCM REMOVAL/INSTALLATION [L3 WITH TC].)
		No	Go to the next step.
7	**VERIFY AFTER REPAIR PROCEDURE** • Perform the "AFTER REPAIR PROCEDURE". (See 01–02B–8 AFTER REPAIR PROCEDURE [L3 WITH TC].) • Are any DTCs present?	Yes	Go to the applicable DTC inspection. (See 01–02B–14 DTC TABLE [L3 WITH TC].)
		No	Troubleshooting completed.

DTC P0571 [L3 WITH TC]

E6U010200500W15

DTC P0571	Brake switch circuit problem
DETECTION CONDITION	• The PCM monitors the change in the input voltage for brake switch No.1 and No.2. If the PCM detects tha* both brake switches No.1 and No.2 remain on or off for **15 s**, it determines that the brake switch circuit ha a malfunction. **Diagnostic support note** • This is a continuous monitor (Other). • MIL does not illuminate. • FREEZE FRAME DATA is not available. • DTCs are stored in PCM memory.
POSSIBLE CAUSE	• Brake switch malfunction • Open circuit between brake switch terminal A and PCM terminal 3T • Open circuit between brake switch terminal C and body ground • Short to the power between brake switch terminal A and PCM terminal 3T • Short to the ground circuit between brake switch terminal A and PCM terminal 3T • PCM malfunction

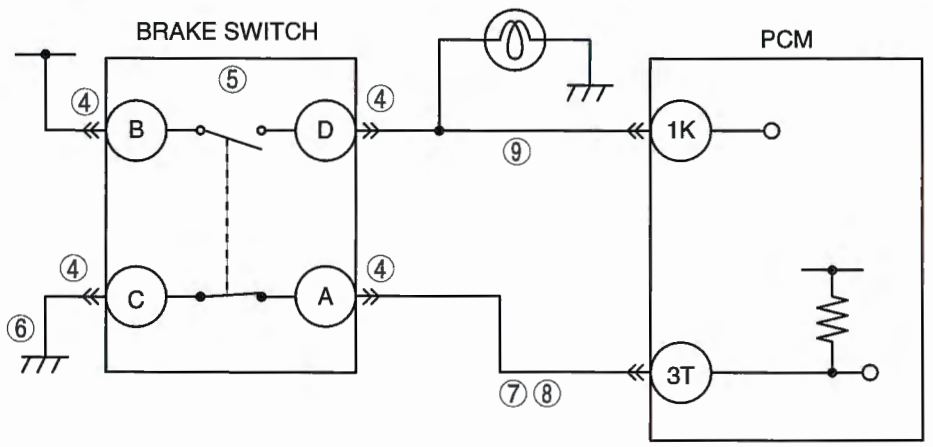

BRAKE SWITCH
WIRING HARNESS-SIDE CONNECTOR



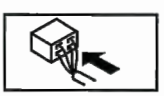

PCM
WIRING HARNESS-SIDE CONNECTOR

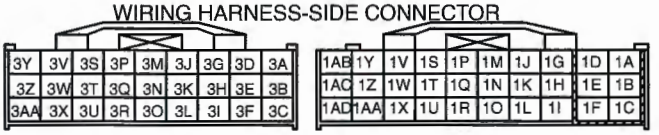

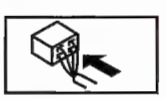

Diagnostic procedure

STEP	INSPECTION		ACTION
1	**VERIFY FREEZE FRAME DATA HAS BEEN RECORDED** • Has the FREEZE FRAME DATA been recorded?	Yes	Go to the next step.
		No	Record FREEZE FRAME DATA on the repair, then go to the next step.
2	**VERIFY RELATED REPAIR INFORMATION AVAILABILITY** • Check for related Service Bulletins and/or on-line repair information availability. • Is any related repair information available?	Yes	Perform the repair or diagnosis according to the available repair information. • If the vehicle is not repaired, go to the next step.
		No	Go to the next step.
3	**VERIFY RELATED PENDING CODE OR STORED DTC** • Turn the ignition switch off then to the ON position (Engine off). • Verify the related PENDING CODE or stored DTCs. • Is the DTC P0703 also present?	Yes	Go to the applicable DTC inspection. (See 01–02B–14 DTC TABLE [L3 WITH TC].)
		No	Go to the next step.

STEP	INSPECTION		ACTION
4	**INSPECT BRAKE SWITCH CONNECTOR FOR POOR CONNECTION** • Turn the ignition switch off. • Disconnect the brake switch connector. • Inspect for poor connection (such as damaged, pull-out pins, corrosion). • Is there any malfunction?	Yes	Repair or replace the terminal, then go to Step 10.
		No	Go to the next step.
5	**INSPECT BRAKE SWITCH** • Inspect the brake switch. • Is the brake switch normal?	Yes	Go to the next step.
		No	Replace the brake switch, then go to Step 10.
6	**INSPECT GROUND CIRCUIT OF BRAKE SWITCH NO.2 FOR OPEN CIRCUIT** • Inspect for continuity between brake switch terminal C (wiring harness-side) and body ground. • Is there continuity?	Yes	Go to the next step.
		No	Repair or replace the wiring harness for an open circuit, then go to Step 10.
7	**INSPECT SIGNAL CIRCUIT OF BRAKE SWITCH NO.2 FOR SHORT TO GROUND** • Inspect for continuity between brake switch terminal A (wiring harness-side) and body ground. • Is there continuity?	Yes	Repair or replace the wiring harness for a short to ground circuit, then go to Step 10.
		No	Go to the next step.
8	**INSPECT SIGNAL CIRCUIT OF BRAKE SWITCH NO.2 FOR OPEN CIRCUIT** • Inspect for continuity between brake switch terminal A (wiring harness-side) and instrument cluster terminal 3T (wiring harness-side). • Is there continuity?	Yes	Go to the next step.
		No	Repair or replace the wiring harness for an open circuit, then go to Step 10.
9	**INSPECT SIGNAL CIRCUIT OF BRAKE SWITCH NO.2 FOR SHORT TO POWER** • Turn the ignition switch to the ON position (Engine off). • Measure the voltage between brake switch terminal D (wiring harness-side) and body ground. • Is the voltage **B+**?	Yes	Repair or replace the wiring harness for a short to power supply, then go to the next step.
		No	Go to the next step.
10	**VERIFY TROUBLESHOOTING OF P0571 COMPLETED** • Make sure to reconnect all disconnected connectors. • Clear the DTC from the PCM memory using the WDS or equivalent. • Turn the ignition switch to the ON position (Engine off). • Depress and release the brake pedal **more than 5 times**. • Is the same DTC present?	Yes	Replace the PCM, then go to the next step. (See 01–40B–6 PCM REMOVAL/INSTALLATION [L3 WITH TC].)
		No	Go to the next step.
11	**VERIFY AFTER REPAIR PROCEDURE** • Perform the "AFTER REPAIR PROCEDURE". (See 01–02B–8 AFTER REPAIR PROCEDURE [L3 WITH TC].) • Are any DTCs present?	Yes	Go to the applicable DTC inspection. (See 01–02B–14 DTC TABLE [L3 WITH TC].)
		No	Troubleshooting completed.

DTC P0601 [L3 WITH TC]

E6U010200600W10

DTC P0601	Internal control module memory check sum error
DETECTION CONDITION	• PCM internal memory check sum error. **Diagnostic support note** • This is a continuous monitor (CCM). • MIL illuminates if the PCM detects the above malfunction condition during the first drive cycle. • FREEZE FRAME DATA is available. • DTCs are stored in PCM memory.
POSSIBLE CAUSE	• PCM internal memory malfunction

Diagnostic procedure

STEP	INSPECTION		ACTION
1	**VERIFY FREEZE FRAME DATA HAS BEEN RECORDED** • Has the FREEZE FRAME DATA been recorded?	Yes	Go to the next step.
		No	Record FREEZE FRAME DATA on the repair order, then go to the next step.
2	**VERIFY RELATED REPAIR INFORMATION AVAILABILITY** • Check for related Service Bulletins and/or on-line repair information availability. • Is any related repair information available?	Yes	Perform the repair or diagnosis according to the available repair information. • If the vehicle is not repaired, go to the next step.
		No	Go to the next step.
3	**VERIFY TROUBLESHOOTING OF P0601 COMPLETED** • Make sure to reconnect all disconnected connectors. • Clear the DTC from the PCM memory using the WDS or equivalent. • Start the engine. • Is same DTC present?	Yes	Replace the PCM, go to the next step. (See 01–40B–6 PCM REMOVAL/INSTALLATION [L3 WITH TC].)
		No	Go to the next step.
4	**VERIFY AFTER REPAIR PROCEDURE** • Perform the "After Repair Procedure". (See 01–02B–8 AFTER REPAIR PROCEDURE [L3 WITH TC].) • Are any DTCs present?	Yes	Go to the applicable DTC inspection. (See 01–02B–14 DTC TABLE [L3 WITH TC].)
		No	Troubleshooting completed.

DTC P0602 [L3 WITH TC]

E6U010200600W11

DTC P0602	PCM programming error
DETECTION CONDITION	• No configuration data in PCM **Note** • If the "PCM CONFIGURATION" is successful, the PCM stores DTC P0602 and illuminates the MIL (System is normal). Clear DTC P0602 using the WDS or equivalent after the "PCM CONFIGURATION". • MIL turns off after three drive cycles with no failure (DTCs remain in PCM). **Diagnostic support note** • This is a continuous monitor (CCM). • MIL illuminates if the PCM detects the above malfunction condition during first drive cycle. • FREEZE FRAME DATA is available. • DTCs are stored in PCM memory.
POSSIBLE CAUSE	• Configuration has not been completed. • PCM malfunction

Diagnostic procedure

STEP	INSPECTION		ACTION
1	**VERIFY FREEZE FRAME DATA HAS BEEN RECORDED** • Has the FREEZE FRAME DATA been recorded?	Yes	Go to the next step.
		No	Record FREEZE FRAME DATA on the repair order, then go to the next step.
2	**VERIFY RELATED REPAIR INFORMATION AVAILABILITY** • Check for related Service Bulletins and/or on-line repair information availability. • Is any related repair information available?	Yes	Perform the repair or diagnosis according to the available repair information. • If the vehicle is not repaired, go to the next step.
		No	Perform PCM configuration procedure, then go to the next step. (See 01–40B–20 PCM CONFIGURATION [L3 WITH TC].)
3	**VERIFY TROUBLESHOOTING OF DTC P0602 COMPLETED** • Make sure to reconnect all disconnected connectors. • Turn ignition switch to the ON position (Engine off). • Clear the DTC from the PCM memory using the WDS or equivalent. • Start the engine. • Is the same DTC present?	Yes	Replace the PCM, then go to the next step. (See 01–40B–6 PCM REMOVAL/INSTALLATION [L3 WITH TC].)
		No	Go to the next step.
4	**VERIFY AFTER REPAIR PROCEDURE** • Perform the "After Repair Procedure". (See 01–02B–8 AFTER REPAIR PROCEDURE [L3 WITH TC].) • Are any DTCs present?	Yes	Go to the applicable DTC inspection. (See 01–02B–14 DTC TABLE [L3 WITH TC].)
		No	Troubleshooting completed.

DTC P0604 [L3 WITH TC]

E6U010200600W12

DTC P0604	PCM RAM error
DETECTION CONDITION	• PCM internal RAM malfunction. **Diagnostic support note** • This is a continuous monitor (CCM). • MIL illuminates if the PCM detects the above malfunction condition during the first drive cycle. • FREEZE FRAME DATA is available. • DTCs are stored in PCM memory.
POSSIBLE CAUSE	• PCM internal RAM malfunction

Diagnostic procedure

STEP	INSPECTION		ACTION
1	**VERIFY FREEZE FRAME DATA HAS BEEN RECORDED** • Has the FREEZE FRAME DATA been recorded?	Yes	Go to the next step.
		No	Record FREEZE FRAME DATA on the repair order, then go to the next step.
2	**VERIFY RELATED REPAIR INFORMATION AVAILABILITY** • Check for related Service Bulletins and/or on-line repair information availability. • Is any related repair information available?	Yes	Perform the repair or diagnosis according to the available repair information. • If the vehicle is not repaired, go to the next step.
		No	Go to the next step.
3	**VERIFY TROUBLESHOOTING OF P0604 COMPLETED** • Make sure to reconnect all disconnected connectors. • Clear the DTC from the PCM memory using the WDS or equivalent. • Start the engine. • Is the same DTC present?	Yes	Replace the PCM, go to the next step. (See 01–40B–6 PCM REMOVAL/INSTALLATION [L3 WITH TC].)
		No	Go to the next step.
4	**VERIFY AFTER REPAIR PROCEDURE** • Perform the "After Repair Procedure". (See 01–02B–8 AFTER REPAIR PROCEDURE [L3 WITH TC].) • Are any DTCs present?	Yes	Go to the applicable DTC inspection. (See 01–02B–14 DTC TABLE [L3 WITH TC].)
		No	Troubleshooting completed.

DTC P0606 [L3 WITH TC]

E6U010200600W13

DTC P0606	ECM/PCM processor
DETECTION CONDITION	• PCM internal CPU malfunction. **Diagnostic support note** • This is a continuous monitor (CCM). • MIL illuminates if the PCM detects the above malfunction condition during the first drive cycle. • FREEZE FRAME DATA is available. • DTCs are stored in PCM memory.
POSSIBLE CAUSE	• PCM internal CPU malfunction

Diagnostic procedure

STEP	INSPECTION		ACTION
1	**VERIFY FREEZE FRAME DATA HAS BEEN RECORDED** • Has the FREEZE FRAME DATA been recorded?	Yes	Go to the next step.
		No	Record FREEZE FRAME DATA on the repair order, then go to the next step.
2	**VERIFY RELATED REPAIR INFORMATION AVAILABILITY** • Check for related Service Bulletins and/or on-line repair information availability. • Is any related repair information available?	Yes	Perform the repair or diagnosis according to the available repair information. • If the vehicle is not repaired, go to the next step.
		No	Go to the next step.
3	**VERIFY TROUBLESHOOTING OF P0606 COMPLETED** • Make sure to reconnect all disconnected connectors. • Clear the DTC from the PCM memory using the WDS or equivalent. • Start engine. • Is same DTC present?	Yes	Replace PCM, go to the next step. (See 01–40B–6 PCM REMOVAL/INSTALLATION [L3 WITH TC].)
		No	Go to the next step.
4	**VERIFY AFTER REPAIR PROCEDURE** • Perform the "After Repair Procedure". (See 01–02B–8 AFTER REPAIR PROCEDURE [L3 WITH TC].) • Are any DTCs present?	Yes	Go to the applicable DTC inspection. (See 01–02B–14 DTC TABLE [L3 WITH TC].)
		No	Troubleshooting completed.

DTC P0607 [L3 WITH TC]

E6U010200600W14

DTC P0607	PCM performance problem
DETECTION CONDITION	• PCM internal malfunction. **Diagnostic support note** • This is a continuous monitor (Other). • MIL does not illuminate. • FREEZE FRAME DATA is not available. • DTCs are stored in PCM memory.
POSSIBLE CAUSE	• PCM internal malfunction

Diagnostic procedure

STEP	INSPECTION		ACTION
1	**VERIFY FREEZE FRAME DATA HAS BEEN RECORDED** • Has FREEZE FRAME DATA been recorded?	Yes	Go to the next step.
		No	Record FREEZE FRAME DATA on repair order, then go to the next step.
2	**VERIFY RELATED REPAIR INFORMATION AVAILABILITY** • Check for related Service Bulletins and/or on-line repair information availability. • Is any related repair information available?	Yes	Perform repair or diagnosis according to the available repair information. • If the vehicle is not repaired, go to the next step.
		No	Go to the next step.
3	**VERIFY TROUBLESHOOTING OF P0607 COMPLETED** • Make sure to reconnect all disconnected connectors. • Clear the DTC from the PCM memory using the WDS or equivalent. • Start engine. • Is same DTC present?	Yes	Replace PCM, go to the next step. (See 01–40B–6 PCM REMOVAL/INSTALLATION [L3 WITH TC].)
		No	Go to the next step.
4	**VERIFY AFTER REPAIR PROCEDURE** • Perform the "After Repair Procedure". (See 01–02B–8 AFTER REPAIR PROCEDURE [L3 WITH TC].) • Are any DTCs present?	Yes	Go to the applicable DTC inspection. (See 01–02B–14 DTC TABLE [L3 WITH TC].)
		No	Troubleshooting completed.

DTC P0610 [L3 WITH TC]

E6U010200600W15

DTC P0610	PCM vehicle options error
DETECTION CONDITION	• PCM data configuration error **Diagnostic support note** • This is a continuous monitor (CCM). • MIL illuminates if the PCM detects the above malfunction condition in the first drive cycle. • FREEZE FRAME DATA is available. • DTCs are stored in PCM memory.
POSSIBLE CAUSE	• Configuration procedure has not been completed • PCM malfunction

Diagnostic procedure

STEP	INSPECTION		ACTION
1	**VERIFY FREEZE FRAME DATA HAS BEEN RECORDED** • Has the FREEZE FRAME DATA been recorded?	Yes	Go to the next step.
		No	Record FREEZE FRAME DATA on the repair order, then go to the next step.
2	**VERIFY RELATED REPAIR INFORMATION AVAILABILITY** • Check for related Service Bulletins and/or on-line repair information availability. • Is any related repair information available?	Yes	Perform the repair or diagnosis according to the available repair information. • If the vehicle is not repaired, go to the next step.
		No	Go to the next step.
3	**VERIFY TROUBLESHOOTING OF DTC P0610 COMPLETED** • Make sure to reconnect all disconnected connectors. • Turn the ignition switch to the ON position (Engine off). • Clear the DTC from the PCM memory using the WDS or equivalent. • Start the engine. • Is the same DTC present?	Yes	Replace the PCM, then go to the next step. (See 01–40B–6 PCM REMOVAL/INSTALLATION [L3 WITH TC].)
		No	Go to the next step.
4	**VERIFY AFTER REPAIR PROCEDURE** • Perform the "AFTER REPAIR PROCEDURE". (See 01–02B–8 AFTER REPAIR PROCEDURE [L3 WITH TC].) • Are any DTCs present?	Yes	Go to the applicable DTC troubleshooting. (See 01–02B–14 DTC TABLE [L3 WITH TC].)
		No	Troubleshooting completed.

DTC P0611 [L3 WITH TC]

E6U010200600W16

DTC P0611	Fuel injector control module performance
DETECTION CONDITION	• When the PCM drives fuel injectors No.1—No.4 but the injector driver module No.1—No.4 circuit voltage is low, the PCM determines that there is a fuel injector control module performance problem. **MONITORING CONDITION** — The following conditions are met: • Battery voltage: **10.03 V or more** • Fuel injection control: except during fuel cut **Diagnostic support note** • This is a continuous monitor (Other). • MIL does not illuminate. • FREEZE FRAME DATA is not available. • DTCs are stored in the PCM memory.
POSSIBLE CAUSE	• Injector driver module malfunction • Connector or terminal malfunction • Short to ground in the wiring harness between injector driver module terminal 2B and PCM terminal 3K • Short to ground in the wiring harness between injector driver module terminal 2C and PCM terminal 3H • Short to ground in the wiring harness between injector driver module terminal 2D and PCM terminal 3E • Short to ground in the wiring harness between injector driver module terminal 2E and PCM terminal 3B • PCM malfunction

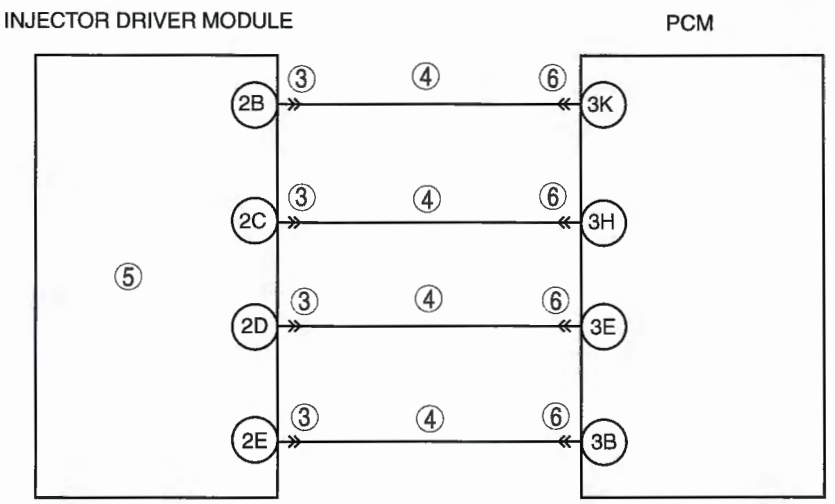

INJECTOR DRIVER MODULE
WIRING HARNESS-SIDE CONNECTOR

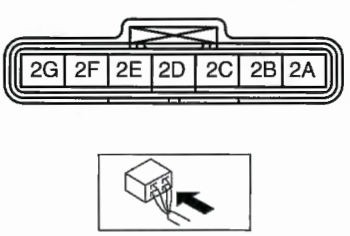

PCM
WIRING HARNESS-SIDE CONNECTOR

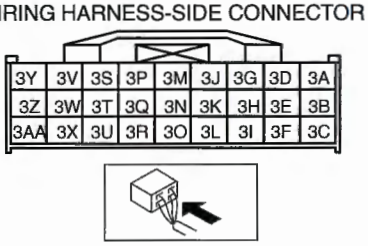

Diagnostic procedure

STEP	INSPECTION		ACTION
1	**VERIFY FREEZE FRAME DATA HAS BEEN RECORDED** • Has the FREEZE FRAME DATA been recorded?	Yes	Go to the next step.
		No	Record FREEZE FRAME DATA on the repair order, then go to the next step.
2	**VERIFY RELATED REPAIR INFORMATION AVAILABILITY** • Check for related Service Bulletins and/or on-line repair information availability. • Is any related repair information available?	Yes	Perform the repair or diagnosis according to the available repair information. • If the vehicle is not repaired, go to the next step.
		No	Go to the next step.
3	**INSPECT INJECTOR DRIVER MODULE CONNECTOR FOR POOR CONNECTION** • Turn the ignition switch off. • Disconnect the injector driver module connector. • Inspect for poor connection (such as damaged/ pulled-out pins, corrosion). • Is there any malfunction?	Yes	Repair or replace the terminal, then go to Step 7.
		No	Go to the next step.
4	**INSPECT INJECTOR DRIVER MODULE CIRCUIT FOR SHORT TO GROUND** • Turn the ignition switch off. • Inspect for continuity between the following terminals. — Injector driver module terminal 2B (wiring harness-side) and body ground — Injector driver module terminal 2C (wiring harness-side) and body ground — Injector driver module terminal 2D (wiring harness-side) and body ground — Injector driver module terminal 2E (wiring harness-side) and body ground • Is there continuity?	Yes	Repair or replace the wiring harness for a short to ground, then go to Step 7.
		No	Go to the next step.
5	**INSPECT INJECTOR DRIVER MODULE** • Inspect the injector driver module. (See 01–40B–21 INJECTOR DRIVER MODULE INSPECTION [L3 WITH TC].) • Is there malfunction?	Yes	Replace the injector driver module, then go to Step 7. (See 01–40B–21 INJECTOR DRIVER MODULE REMOVAL/INSTALLATION [L3 WITH TC].)
		No	Go to the next step.
6	**INSPECT PCM CONNECTOR FOR POOR CONNECTION** • Turn the ignition switch off. • Disconnect the PCM connector. • Inspect for poor connection (such as damaged/ pulled-out pins, corrosion). • Is there any malfunction?	Yes	Repair or replace the terminal, then go to the next step.
		No	Go to the next step.
7	**VERIFY TROUBLESHOOTING OF DTC P0611 COMPLETED** • Make sure to connect all disconnected connectors. • Clear the DTC from the PCM memory using the WDS or equivalent. • Start the engine. • Is the same DTC present?	Yes	Replace the PCM, then go to the next step. (See 01–40B–6 PCM REMOVAL/INSTALLATION [L3 WITH TC].)
		No	Go to the next step.
8	**VERIFY AFTER REPAIR PROCEDURE** • Perform the "AFTER REPAIR PROCEDURE". (See 01–02B–8 AFTER REPAIR PROCEDURE [L3 WITH TC].) • Are any DTCs present?	Yes	Go to the applicable DTC inspection. (See 01–02B–14 DTC TABLE [L3 WITH TC].)
		No	DTC troubleshooting completed.

DTC P0638 [L3 WITH TC]

E6U010200600W17

DTC P0638	Throttle actuator control range/performance
DETECTION CONDITION	• The PCM compares the actual TP with the target TP when the engine is running. If the difference is more than the specification, the PCM determines that there is a throttle actuator control circuit range/ performance problem. **Diagnostic support note** • This is a continuous monitor (CCM). • The MIL illuminates if the PCM detects the above malfunction condition in the first drive cycle. • FREEZE FRAME DATA is available. • DTCs are stored in the PCM memory.
POSSIBLE CAUSE	• Throttle actuator malfunction • Throttle valve malfunction • PCM malfunction

Diagnostic procedure

STEP	INSPECTION		ACTION
1	**VERIFY FREEZE FRAME DATA HAS BEEN RECORDED** • Has FREEZE FRAME DATA been recorded?	Yes	Go to the next step.
		No	Record FREEZE FRAME DATA on repair order, then go to the next step.
2	**VERIFY RELATED REPAIR INFORMATION AVAILABILITY** • Check for related Service Bulletins and/or on-line repair information availability. • Is any related repair information available?	Yes	Perform repair or diagnosis according to the available repair information. • If the vehicle is not repaired, go to the next step.
		No	Go to the next step.
3	**INSPECT FOR OTHER DTCS** • Have other DTCs been stored?	Yes	Perform the diagnostic procedure for the applicable DTCs.
		No	Go to the next step.
4	**VERIFY TROUBLESHOOTING OF P0638 COMPLETED** • Make sure to reconnect all disconnected connectors. • Clear the DTC from the PCM memory using the WDS or equivalent. • Turn the ignition switch off. • Start the engine and let it idle. • Is the same DTC present?	Yes	Replace the PCM, go to the next step. (See 01–40B–6 PCM REMOVAL/INSTALLATION [L3 WITH TC].)
		No	Go to the next step.
5	**VERIFY AFTER REPAIR PROCEDURE** • Perform the "After Repair Procedure". (See 01–02B–8 AFTER REPAIR PROCEDURE [L3 WITH TC].) • Are any DTCs present?	Yes	Go to the applicable DTC inspection. (See 01–02B–14 DTC TABLE [L3 WITH TC].)
		No	Troubleshooting completed.

DTC P0703 [L3 WITH TC]

E6U010200700W05

DTC P0703	Brake switch No.1 circuit malfunction
DETECTION CONDITION	• PCM monitors changes in the input voltage from the brake switch. If the PCM does not detect the voltage change while alternately accelerating and decelerating **8 times**, the PCM determines that the brake switch circuit has a malfunction. **Diagnostic support note** • This is a continuous monitor (CCM). • MIL illuminates if the PCM detects the above malfunction condition in two consecutive drive cycles or in one drive cycle while the DTC for the same malfunction has been stored in the PCM. • PENDING CODE is available if the PCM detects the above malfunction condition during the first drive cycle. • FREEZE FRAME DATA is available. • DTCs are stored in PCM memory.
POSSIBLE CAUSE	• Brake switch malfunction • Poor connection of the brake switch connector or the PCM connector • Short to the power supply between brake switch terminal D and PCM connector terminal 1K • Open circuit between brake switch terminal D and PCM connector terminal 1K • Open circuit between the battery positive terminal and brake switch terminal B • PCM malfunction

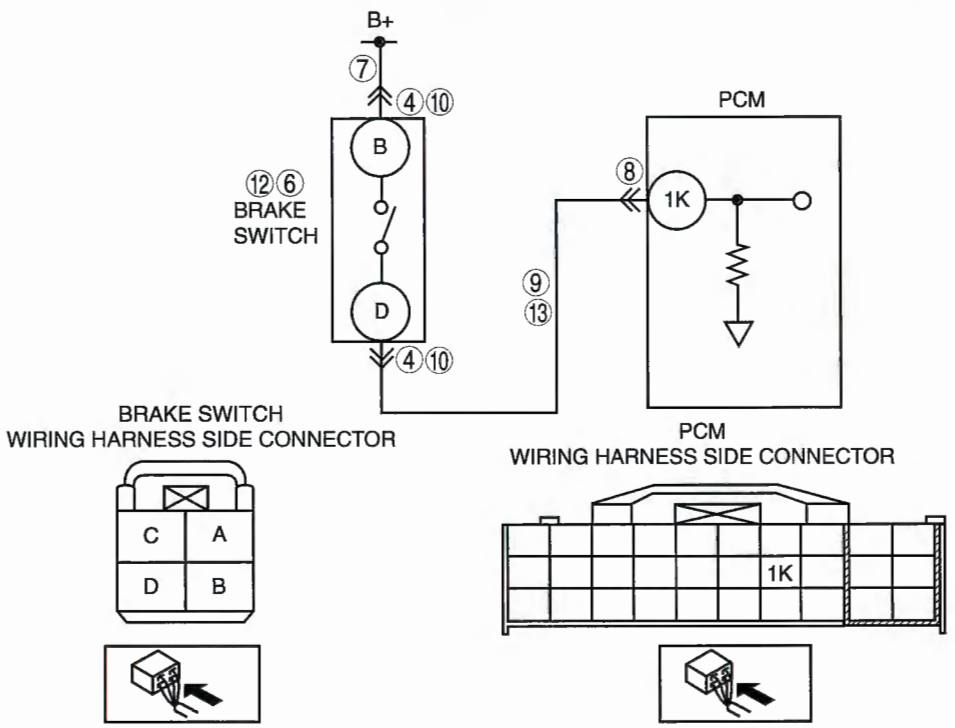

Diagnostic procedure

STEP	INSPECTION		ACTION
1	**VERIFY FREEZE FRAME DATA HAS BEEN RECORDED** • Has the FREEZE FRAME DATA been recorded?	Yes	Go to the next step.
		No	Record FREEZE FRAME DATA on the repair order, then go to the next step.
2	**VERIFY RELATED REPAIR INFORMATION AVAILABILITY** • Check for related Service Bulletins and/or on-line repair information availability. • Is any related repair information available?	Yes	Perform the repair or diagnosis according to the available repair information. • If the vehicle is not repaired, go to the next step.
		No	Go to the next step.
3	**CLASSIFY HIGH INPUT OR LOW INPUT** • Connect the WDS or equivalent to the DLC-2. • Access the BOO PID. • Verify the BOO PID during brake pedal operation. • Is the BOO PID always off?	Yes	Go to the next step.
		No	Go to Step 10.
4	**INSPECT BRAKE SWITCH CONNECTOR FOR POOR CONNECTION** • Turn the ignition switch to off. • Disconnect the brake switch connector. • Inspect for poor connection (such as damaged pulled-out terminals, corrosion). • Is there any malfunction?	Yes	Repair or replace the terminal, then go to Step 14.
		No	Go to the next step.
5	**CLASSIFY BRAKE SWITCH OR CIRCUIT** • Connect the WDS or equivalent to the DLC-2. • Access the BOO PID. • Connect a jumper wire between brake switch terminal B and D (harness-side). • Is the BOO PID on?	Yes	Go to the next step.
		No	Go to Step 7.
6	**INSPECT BRAKE SWITCH** • Perform the brake switch inspection. (See 04–11–9 BRAKE SWITCH INSPECTION.) • Is the brake switch normal?	Yes	Go to Step 14.
		No	Replace the brake switch, then go to Step 14.
7	**INSPECT BRAKE SWITCH POWER CIRCUIT FOR OPEN CIRCUIT** • Measure the voltage between brake switch connector terminal B (harness-side) and body ground. • Is the voltage **B+**?	Yes	Go to the next step.
		No	Repair or replace the brake switch power circuit for an open circuit, then go to Step 14.
8	**INSPECT PCM CONNECTOR FOR POOR CONNECTION** • Turn the ignition switch to off. • Disconnect the PCM connector. • Inspect for poor connection (such as damaged/ pulled-out pins, corrosion). • Is there any malfunction?	Yes	Repair or replace the terminal, then go to Step 14.
		No	Go to the next step.
9	**INSPECT BRAKE SWITCH SIGNAL CIRCUIT FOR OPEN CIRCUIT** • Inspect for continuity between brake switch terminal D (harness-side) and PCM terminal 1K (harness-side). • Is there continuity?	Yes	Repair or replace the wiring harness for an open circuit, then go to Step 14.
		No	Go to Step 14.
10	**INSPECT BRAKE SWITCH CONNECTOR FOR POOR CONNECTION** • Turn the ignition switch to off. • Disconnect brake switch connector. • Inspect for poor connection (such as damaged/ pulled-out pins, corrosion). • Is there malfunction?	Yes	Repair or replace the terminal, then go to Step 14.
		No	Go to the next step.

STEP	INSPECTION		ACTION
11	**CLASSIFY BRAKE SWITCH OR CIRCUIT** • Connect the WDS or equivalent to the DLC-2. • Access the BOO PID. • Verify that the BOO PID changes from on to off when the brake switch connector is disconnected. • Does BOO PID change from on to off?	Yes	Go to the next step.
		No	Go to Step 13.
12	**INSPECT BRAKE SWITCH** • Perform the brake switch inspection. (See 04–11–9 BRAKE SWITCH INSPECTION.) • Is the brake switch normal?	Yes	Go to Step 14.
		No	Replace the brake switch, then go to Step 14.
13	**INSPECT BRAKE SWITCH SIGNAL CIRCUIT FOR SHORT TO POWER SUPPLY** • Measure the voltage between brake switch connector terminal D (harness-side) and body ground. • Is the voltage **B+**?	Yes	Repair or replace the wiring harness for a short to power supply, then go to Step 14.
		No	Go to the next step.
14	**VERIFY TROUBLESHOOTING OF DTC P0703 COMPLETED** • Make sure to reconnect all disconnected connectors. • Clear the DTC from the memory using the WDS or equivalent. • Drive vehicle at **30 km/h {18.6 mph} or more**. • Depress and release brake pedal **more than 8 times** while driving the vehicle. • Is the PENDING CODE for this DTC present?	Yes	Replace the PCM, then go to the next step. (See 01–40B–6 PCM REMOVAL/INSTALLATION [L3 WITH TC].)
		No	Go to the next step.
15	**VERIFY AFTER REPAIR PROCEDURE** • Perform the "After Repair Procedure". (See 01–02B–8 AFTER REPAIR PROCEDURE [L3 WITH TC].) • Are any DTCs present?	Yes	Go to the applicable DTC inspection. (See 01–02B–14 DTC TABLE [L3 WITH TC].)
		No	Troubleshooting completed.

DTC P0704 [L3 WITH TC]

E6U010200700W06

DTC P0704	Clutch switch circuit malfunction
DETECTION CONDITION	• PCM monitors changes in the input voltage from the CPP switch. If the PCM does not detect the voltage change while the vehicle is driven at a vehicle speed of **above 30 km/h {19 mph}** and stopped **8 times** alternately, the PCM determines that the CPP switch circuit has a malfunction. **Diagnostic support note** • This is a continuous monitor (CCM). • MIL illuminates if the PCM detects the above malfunction condition in two consecutive drive cycles or in one drive cycle while the DTC for the same malfunction has been stored in the PCM. • PENDING CODE is available if the PCM detects the above malfunction condition during the first drive cycle. • FREEZE FRAME DATA is available. • DTCs are stored in PCM memory.
POSSIBLE CAUSE	• Clutch switch malfunction • Poor connection of the CPP switch connector or the PCM connector • Short to ground between CPP switch terminal A and PCM connector terminal 1H • Open circuit between CPP switch terminal A and PCM connector terminal 1H • Open circuit between ground and CPP switch terminal B • PCM malfunction

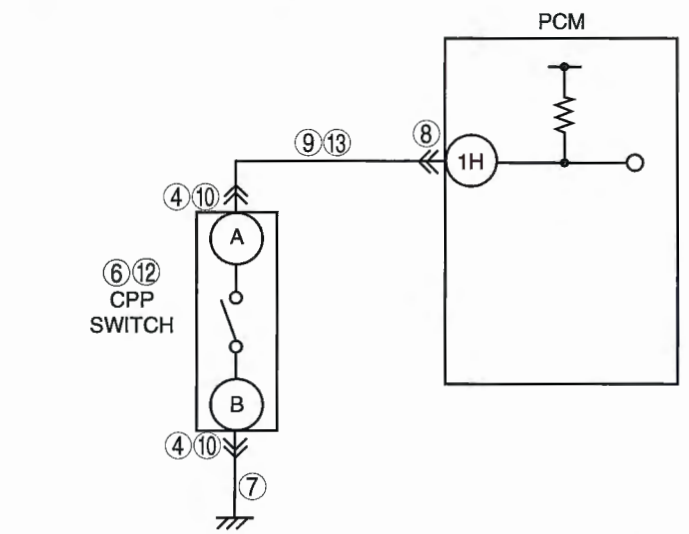

CPP SWITCH
WIRING HARNESS SIDE CONNECTOR



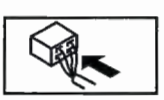

PCM
WIRING HARNESS SIDE CONNECTOR

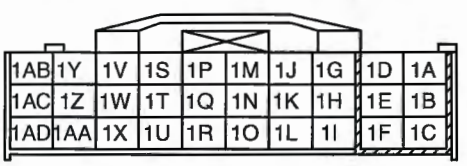

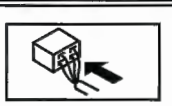

Diagnostic procedure

STEP	INSPECTION		ACTION
1	**VERIFY FREEZE FRAME DATA HAS BEEN RECORDED** • Has the FREEZE FRAME DATA been recorded?	Yes	Go to the next step.
		No	Record FREEZE FRAME DATA on the repair order, then go to the next step.
2	**VERIFY RELATED REPAIR INFORMATION AVAILABILITY** • Check for related Service Bulletins and/or on-line repair information availability. • Is any related repair information available?	Yes	Perform the repair or diagnosis according to the available repair information. • If the vehicle is not repaired, go to the next step.
		No	Go to the next step.
3	**CLASSIFY HIGH INPUT OR LOW INPUT** • Connect the WDS or equivalent to the DLC-2. • Access the CPP PID. • Verify the CPP PID during clutch pedal operation. • Is the CPP PID always off?.	Yes	Go to Next step.
		No	Go to Step 10.
4	**INSPECT CPP SWITCH CONNECTOR FOR POOR CONNECTION** • Turn the ignition switch to off. • Disconnect the CPP switch connector. • Inspect for poor connection (such as damaged/ pulled-out pins, corrosion). • Is there any malfunction?	Yes	Repair or replace the terminal, then go to Step 14.
		No	Go to the next step.
5	**CLASSIFY CPP SWITCH OR CIRCUIT** • Connect the WDS or equivalent to the DLC-2. • Access the CPP PID. • Connect a jumper wire between CPP switch terminal A and B (harness-side). • Is the CPP PID on?	Yes	Go to the next step.
		No	Go to Step 7.
6	**INSPECT CPP SWITCH** • Perform the CPP switch inspection. (See 01–40B–22 CLUTCH PEDAL POSITION (CPP) SWITCH INSPECTION [L3 WITH TC].) • Is the CPP switch normal?	Yes	Go to Step 14.
		No	Replace the CPP switch, then go to Step 14.
7	**INSPECT CPP SWITCH GROUND CIRCUIT FOR OPEN CIRCUIT** • Inspect for continuity between CPP switch terminal B (harness-side) and ground. • Is there continuity?	Yes	Go to the next step.
		No	Repair or replace the CPP switch power circuit for an open circuit, then Go to Step 14.
8	**INSPECT PCM CONNECTOR FOR POOR CONNECTION** • Turn the ignition switch to off. • Disconnect the PCM connector. • Inspect for poor connection (such as damaged/ pulled-out pins, corrosion). • Is there any malfunction?	Yes	Repair or replace the terminal, then go to Step 14.
		No	Go to the next step.
9	**INSPECT CPP SWITCH SIGNAL CIRCUIT FOR OPEN CIRCUIT** • Inspect for continuity between CPP switch terminal A (harness-side) and PCM terminal 1H (harness-side). • Is there continuity?	Yes	Repair or replace the wiring harness for an open circuit, then go to Step 14.
		No	Go to Step 14.
10	**INSPECT CPP SWITCH CONNECTOR FOR POOR CONNECTION** • Turn the ignition switch to off. • Disconnect the CPP switch connector. • Inspect for poor connection (such as damaged/ pulled-out pins, corrosion). • Is there any malfunction?	Yes	Repair or replace the terminal, then go to Step 14.
		No	Go to the next step.
1	**CLASSIFY CPP SWITCH OR CIRCUIT** • Connect the WDS or equivalent to the DLC-2. • Access the CPP PID. • Verify that the CPP PID changes from on to off when the CPP switch connector disconnected. • Does the CPP PID change from on to off?	Yes	Go to the next step.
		No	Go to Step 13.

STEP	INSPECTION		ACTION
12	**INSPECT CPP switch** • Perform the CPP switch inspection. (See 01–40B–22 CLUTCH PEDAL POSITION (CPP) SWITCH INSPECTION [L3 WITH TC].) • Is the CPP switch normal?	Yes	Go to Step 14.
		No	Replace the CPP switch, then go to Step 14.
13	**INSPECT CPP SWITCH SIGNAL CIRCUIT FOR SHORT TO GROUND** • Inspect for continuity between CPP switch terminal A and ground. • Is there continuity?	Yes	Repair or replace the wiring harness for a short to ground, then go to Step 14.
		No	Go to Next step.
14	**VERIFY TROUBLESHOOTING OF DTC P0704 COMPLETED** • Make sure to reconnect all disconnected connectors. • Start the engine. • Clear the DTC from the PCM memory using the WDS or equivalent. • Operate the clutch pedal while driving the vehicle **below 30 km/h {19 mph} and stopping 8 times** alternately. • Is the PENDING CODE for this DTC present?	Yes	Replace the PCM, then go to the next step. (See 01–40B–6 PCM REMOVAL/INSTALLATION [L3 WITH TC].)
		No	Go to the next step.
15	**VERIFY AFTER REPAIR PROCEDURE** • Perform the "After Repair Procedure". (See 01–02B–8 AFTER REPAIR PROCEDURE [L3 WITH TC].) • Are any DTCs present?	Yes	Go to the applicable DTC inspection. (See 01–02B–14 DTC TABLE [L3 WITH TC].)
		No	Troubleshooting completed.

DTC P0850 [L3 WITH TC]

E6U010200800W02

DTC P0850	Neutral switch circuit malfunction
DETECTION CONDITION	• PCM monitors changes in the input voltage from the neutral switch. If the PCM does not detect the voltage change while driving the vehicle at a speed **above 30 km/h {19 mph}** and the clutch pedal is depressed and released **10 times** repeatedly, the PCM determines that the neutral switch circuit has a malfunction. **Diagnostic support note** • This is a continuous monitor (CCM). • MIL illuminates if the PCM detects the above malfunction condition in two consecutive drive cycles or in one drive cycle while the DTC for the same malfunction has been stored in the PCM. • PENDING CODE is available if the PCM detects the above malfunction condition during the first drive cycle. • FREEZE FRAME DATA is available. • DTCs are stored in PCM memory.
POSSIBLE CAUSE	• Neutral switch malfunction • Poor connection of the neutral switch connector or PCM connector • Short to ground between neutral switch terminal B and PCM connector terminal 1W • Open circuit in the wiring harness between neutral switch terminal B and PCM connector terminal 1W • Open circuit in the wiring harness between ground and brake switch terminal A. • PCM malfunction

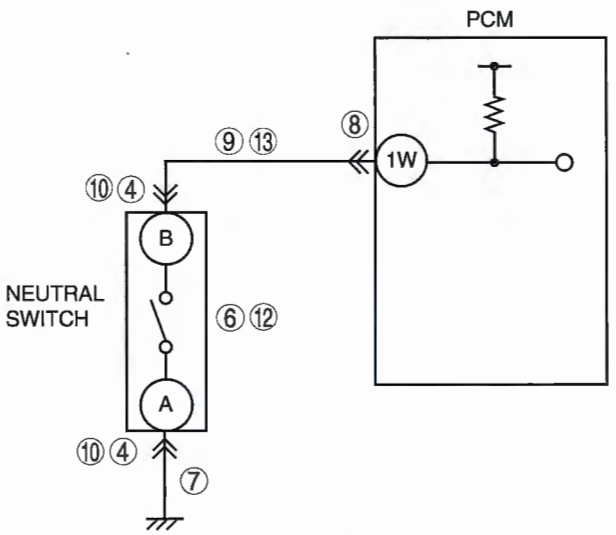

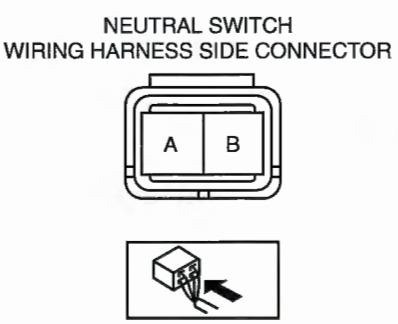

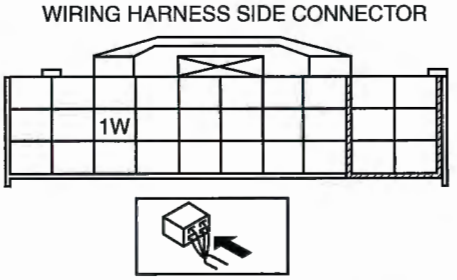

Diagnostic procedure

STEP	INSPECTION		ACTION
1	**VERIFY FREEZE FRAME DATA HAS BEEN RECORDED** • Has the FREEZE FRAME DATA been recorded?	Yes	Go to the next step.
		No	Record FREEZE FRAME DATA on the repair order, then g to the next step.
2	**VERIFY RELATED REPAIR INFORMATION AVAILABILITY** • Check for related Service Bulletins and/or on-line repair information availability. • Is any related repair information available?	Yes	Perform the repair or diagnosis according to the available repair information. • If the vehicle is not repaired, go to the next step.
		No	Go to the next step.
3	**CLASSIFY HIGH INPUT OR LOW INPUT** • Connect the WDS or equivalent to the DLC-2. • Access the CPP/PNP PID. • Verify the CPP/PNP PID when gear is in the neutral position. • Is the CPP/PNP PID always off?.	Yes	Go to Next step.
		No	Go to Step 10.
4	**INSPECT NEUTRAL SWITCH CONNECTOR FOR POOR CONNECTION** • Turn the ignition switch to off. • Disconnect the neutral switch connector. • Inspect for poor connection (such as damaged/ pulled-out pins, corrosion). • Is there any malfunction?	Yes	Repair or replace the terminal, then go to Step 14.
		No	Go to the next step.
5	**CLASSIFY NEUTRAL SWITCH OR CIRCUIT** • Connect the WDS or equivalent to the DLC-2. • Access the CPP/PNP PID. • Connect a jumper wire between neutral switch terminal A and B (harness-side). • Is the CPP/PNP PID on?	Yes	Go to the next step.
		No	Go to Step 7.
6	**INSPECT NEUTRAL SWITCH** • Perform the neutral switch inspection. (See 01–40B–23 NEUTRAL SWITCH INSPECTION [L3 WITH TC].) • Is the neutral switch normal?	Yes	Go to Step 14.
		No	Replace the neutral switch, then go to Step 14.
7	**INSPECT NEUTRAL SWITCH GROUND CIRCUIT FOR OPEN CIRCUIT** • Inspect for continuity between neutral switch terminal A (harness-side) and body ground. • Is there continuity?	Yes	Go to the next step.
		No	Repair or replace the neutral switch power circuit for an open circuit, then go to Step 14.
8	**INSPECT PCM CONNECTOR FOR POOR CONNECTION** • Turn the ignition switch to off. • Disconnect the PCM connector. • Inspect for poor connection (such as damaged/ pulled-out pins, corrosion). • Is there any malfunction?	Yes	Repair or replace the terminal, then go to Step 14.
		No	Go to the next step.
9	**INSPECT NEUTRAL SWITCH SIGNAL CIRCUIT FOR OPEN CIRCUIT** • Inspect for continuity between neutral switch terminal B (harness-side) and PCM terminal 1W (harness-side). • Is there continuity?	Yes	Repair or replace wiring harness for an open circuit, then go to Step 14.
		No	Go to Step 14.
10	**INSPECT NEUTRAL SWITCH CONNECTOR FOR POOR CONNECTION** • Turn the ignition switch to off. • Disconnect neutral switch connector. • Inspect for poor connection (such as damaged/ pulled-out pins, corrosion). • Is there any malfunction?	Yes	Repair or replace the terminal, then go to Step 14.
		No	Go to the next step.

STEP	INSPECTION		ACTION
11	**CLASSIFY NEUTRAL SWITCH OR CIRCUIT** • Connect the WDS or equivalent to the DLC-2. • Access the CPP/PNP PID. • Verify that the CPP/PNP PID changes from on to off when the neutral switch connector is disconnected. • Does the CPP/PNP PID change from on to off?	Yes	Go to the next step.
		No	Go to Step 13.
12	**INSPECT NEUTRAL SWITCH** • Perform the neutral switch inspection. (See 01–40B–23 NEUTRAL SWITCH INSPECTION [L3 WITH TC].) • Is the neutral switch normal?	Yes	Go to Step 14.
		No	Replace the neutral switch, then go to Step 14.
13	**INSPECT NEUTRAL SWITCH SIGNAL CIRCUIT FOR SHORT TO GROUND** • Inspect for continuity between neutral switch terminal B (harness-side) and body ground. • Is there continuity?	Yes	Repair or replace the wiring harness for a short to ground, then go to Step 14.
		No	Go to the next step.
14	**VERIFY TROUBLESHOOTING OF DTC P0850 COMPLETED** • Make sure to reconnect all disconnected connectors. • Start the engine. • Clear the DTC from the PCM memory using the WDS or equivalent. • Drive vehicle **above 30 km/h {19 mph}** and stop vehicle. • Depress and release clutch pedal **more than 10 times** during the drive cycle. • Is the PENDING CODE for this DTC present?	Yes	Replace PCM, then go to the next step. (See 01–40B–6 PCM REMOVAL/INSTALLATION [L3 WITH TC].)
		No	Go to the next step.
15	**VERIFY AFTER REPAIR PROCEDURE** • Perform the "After Repair Procedure". (See 01–02B–8 AFTER REPAIR PROCEDURE [L3 WITH TC].) • Are any DTCs present?	Yes	Go to the applicable DTC inspection. (See 01–02B–14 DTC TABLE [L3 WITH TC].)
		No	Troubleshooting completed.

DTC P2004 [L3 WITH TC]

E6U010202000W18

DTC P2004	Variable swirl control system shutter valve stuck open
DETECTION CONDITION	• PCM monitors the mass variable swirl shutter valve position using the variable swirl shutter valve switch. If the PCM turns variable swirl solenoid valve on but variable swirl shutter valve position still remains open (variable swirl shutter valve switch is on), the PCM determines that the variable swirl shutter valve is stuck open. **Diagnostic support note** • This is a continuous monitor (CCM). • MIL illuminates if the PCM detects the above malfunction condition in two consecutive drive cycles or in one drive cycle while the DTC for the same malfunction has been stored in the PCM. • PENDING CODE is available if the PCM detects the above malfunction condition during the first drive cycle. • FREEZE FRAME DATA is available. • DTCs are stored in PCM memory.
POSSIBLE CAUSE	• Variable swirl shutter valve actuator malfunction (stuck open) • Misconnected or pulled out vacuum hose • Variable swirl solenoid valve malfunction • Open circuit in the wiring harness between variable swirl solenoid valve terminal B and PCM terminal 4K • Short to power in the wiring harness between variable swirl solenoid valve terminal B and PCM terminal 4K • Open circuit in the wiring harness between variable swirl shutter valve switch terminal A and PCM terminal 1N • Short to power in the wiring harness between variable swirl shutter valve switch terminal A and PCM terminal 1N • PCM malfunction

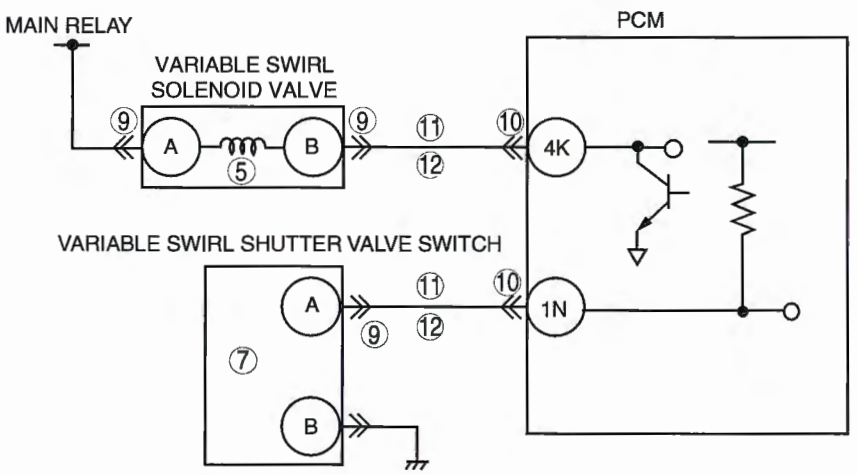

VARIABLE SWIRL SOLENOID VALVE WIRING HARNESS SIDE CONNECTOR



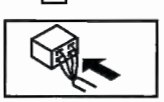

PCM WIRING HARNESS SIDE CONNECTOR

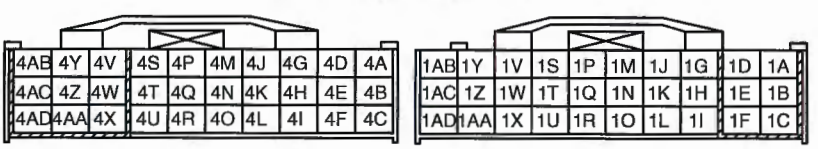

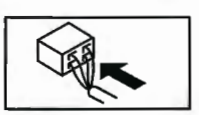

VARIABLE SWIRL SHUTTER VALVE SWITCH WIRING HARNESS SIDE CONNECTOR

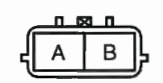

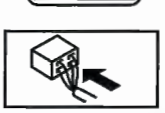

Diagnostic procedure

STEP	INSPECTION		ACTION
1	**VERIFY FREEZE FRAME DATA HAS BEEN RECORDED** • Has the FREEZE FRAME DATA been recorded?	Yes	Go to the next step.
		No	Record FREEZE FRAME DATA on the repair order, then go to the next step.
2	**VERIFY RELATED REPAIR INFORMATION AVAILABILITY** • Check for related Service Bulletins and/or on-line repair information availability. • Is any related repair information available?	Yes	Perform the repair or diagnosis according to the available repair information. • If the vehicle is not repaired, go to the next step.
		No	Go to the next step.
3	**CLASSIFY INTERMITTENT CONCERN OR CONTINUOUS CONCERN** • Clear the DTC from the PCM memory using the WDS or equivalent. • Drive the vehicle under the following conditions: — Engine coolant temperature is **above 63 °C {145 °F}**. — Engine speed: **below 3,750 rpm** — Throttle opening angle is as follows: • Engine speed **below 1,500 rpm: above 35%** • Engine speed **between 1,500–2,500 rpm: between 25–35%** • Engine speed **above 2,500: below 25%** • Is the PENDING CODE for this DTC present?	Yes	Go to the next step.
		No	Intermittent concern exists. Go to INTERMITTENT CONCERN TROUBLESHOOTING procedure. (See 01–03B–6 INTERMITTENT CONCERN TROUBLESHOOTING [L3 WITH TC].)
4	**VERIFY IF STORED OTHER DTCs STORED** • Verify stored DTCs using the WDS or equivalent. • Is DTC P2088 or P2089 present?	Yes	Go to the appropriate DTC troubleshooting procedures.
		No	Go to the next step.
5	**INSPECT VARIABLE SWIRL SOLENOID VALVE** • Perform "VARIABLE SWIRL SOLENOID VALVE INSPECTION". (See 01–13B–13 VARIABLE SWIRL SOLENOID VALVE INSPECTION [L3 WITH TC].) • Is the variable swirl solenoid valve normal?	Yes	Go to the next step.
		No	Replace variable swirl solenoid valve, then go to Step 13.
6	**INSPECT VARIABLE SWIRL SHUTTER VALVE ACTUATOR** • Perform "VARIABLE SWIRL SHUTTER VALVE ACTUATOR INSPECTION". (See 01–13B–13 VARIABLE SWIRL SHUTTER VALVE ACTUATOR INSPECTION [L3 WITH TC].) • Is the variable swirl shutter valve actuator normal?	Yes	Go to the next step.
		No	Replace the intake manifold, then go to Step 13.
7	**INSPECT VARIABLE SWIRL SHUTTER VALVE SWITCH** • Perform the "VARIABLE SWIRL SHUTTER VALVE SWITCH INSPECTION". (See 01–40B–25 VARIABLE SWIRL SHUTTER VALVE SWITCH INSPECTION [L3 WITH TC].) • Is the variable swirl shutter valve switch normal?	Yes	Go to the next step.
		No	Replace the intake manifold, then go to Step 13.
8	**VERIFY CONNECTION OF VACUUM HOSE ROUTING** • Verify that the vacuum hoses are connected properly. (See 01–13B–4 VACUUM HOSE ROUTING DIAGRAM [L3 WITH TC].) • Are the vacuum hoses connected properly?	Yes	Go to the next step.
		No	Connect the vacuum hoses properly, then go to the next step.

STEP	INSPECTION		ACTION
9	**INSPECT VARIABLE SWIRL SOLENOID VALVE OR VARIABLE SWIRL SHUTTER VALVE SW CONNECTOR FOR POOR CONNECTION** • Turn the ignition switch to off. • Disconnect the variable swirl solenoid valve connector and variable swirl shutter valve switch connector. • Inspect for poor connection (such as damaged/ pulled-out pins, corrosion). • Is there any malfunction?	Yes	Repair or replace the terminal, then go to Step 13.
		No	Go to the next step.
10	**INSPECT PCM CONNECTOR FOR POOR CONNECTION** • Turn the ignition switch to off. • Disconnect the PCM connector. • Inspect for poor connection (such as damaged/ pulled-out pins, corrosion). • Is there any malfunction?	Yes	Repair or replace the terminal, then go to Step 13.
		No	Go to the next step.
11	**INSPECT VARIABLE SWIRL SOLENOID VALVE OR VARIABLE SWIRL SHUTTER VALVE SW SIGNAL CIRCUIT FOR OPEN CIRCUIT** • Inspect for continuity between the following terminals: — Variable swirl solenoid valve terminal B (harness-side) and PCM terminal 4K (harness-side). — Variable swirl shutter valve sw terminal A (harness-side) and PCM terminal 1N (harness-side). • Is there continuity?	Yes	Go to the next step.
		No	Repair or replace the wiring harness for an open circuit, then go to Step 13.
12	**INSPECT VARIABLE SWIRL SOLENOID VALVE OR VARIABLE SWIRL SHUTTER VALVE SWITCH CIRCUIT FOR SHORT TO POWER SUPPLY** • Disconnect the variable swirl solenoid valve connector and variable swirl shutter valve switch connector. • Turn ignition switch to the ON position (Engine off). • Measure the voltage between the following terminals and body ground. — PCM terminal 4K (harness-side). — PCM terminal 1N (harness-side). • Is the voltage **B+?**	Yes	Repair or replace the wiring harness for a short to power supply, then go to the next step.
		No	Go to the next step.
13	**VERIFY TROUBLESHOOTING OF DTC P2004 COMPLETED** • Make sure to reconnect all disconnected connectors. • Start the engine. • Clear the DTC from the PCM memory using the WDS or equivalent. • Start the engine. • Drive the vehicle under following conditions: — Engine coolant temperature is **above 63 °C {145 °F}**. — Engine speed: **below 3,750 rpm** — Throttle opening angle is as follows • Engine speed **below 1,500 rpm: above 35%** • Engine speed **between 1,500–2,500 rpm: between 25–35%** • Engine speed **above 2,500: below 25%** • Is the PENDING CODE for this DTC present?	Yes	Replace the PCM, then go to the next step. (See 01–40B–6 PCM REMOVAL/INSTALLATION [L3 WITH TC].)
		No	Go to the next step.
14	**VERIFY AFTER REPAIR PROCEDURE** • Perform the "After Repair Procedure". (See 01–02B–8 AFTER REPAIR PROCEDURE [L3 WITH TC].) • Are any DTCs present?	Yes	Go to the applicable DTC inspection. (See 01–02B–14 DTC TABLE [L3 WITH TC].)
		No	Troubleshooting completed.

DTC P2006 [L3 WITH TC]

E6U010202000W19

DTC P2006	Variable swirl control system shutter valve stuck closed
DETECTION CONDITION	• PCM monitors the mass variable swirl shutter valve position using the variable swirl shutter valve switch. If PCM turns the variable swirl solenoid valve off but the variable swirl position still remains closed (variable swirl shutter valve switch is off), the PCM determines that the variable swirl shutter valve is stuck closed. **Diagnostic support note** • This is a continuous monitor (CCM). • MIL illuminates if the PCM detects the above malfunction condition in two consecutive drive cycles or in one drive cycle while the DTC for the same malfunction has been stored in the PCM. • PENDING CODE is available if the PCM detects the above malfunction condition during the first drive cycle. • FREEZE FRAME DATA is available. • DTCs are stored in PCM memory.
POSSIBLE CAUSE	• ECT sensor malfunction • TP sensor malfunction • CKP sensor malfunction • Variable swirl solenoid valve malfunction • Variable swirl shutter valve malfunction (stuck closed) • Variable swirl shutter valve actuator malfunction (stuck closed). • Short to ground circuit between variable swirl solenoid valve terminal B and PCM terminal 4K • Short to ground in the wiring harness between variable swirl shutter valve switch terminal A and PCM terminal 1N • PCM malfunction

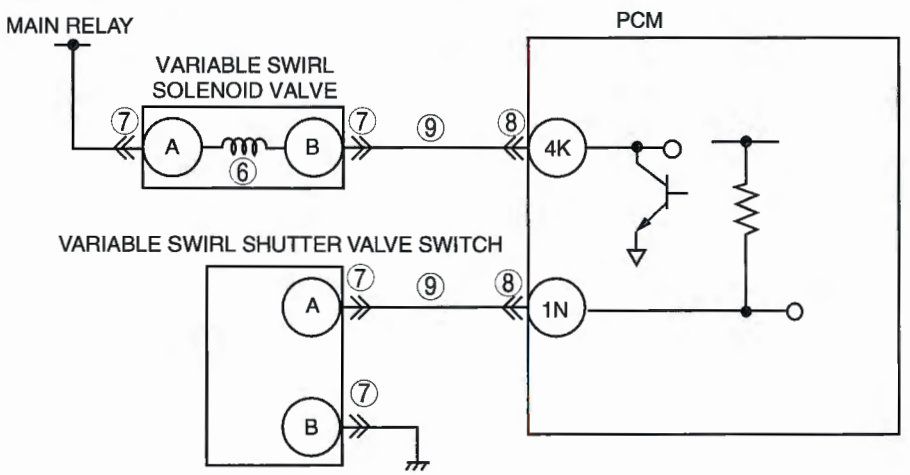

VARIABLE SWIRL SOLENOID VALVE WIRING HARNESS SIDE CONNECTOR



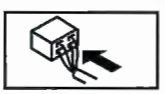

PCM WIRING HARNESS SIDE CONNECTOR

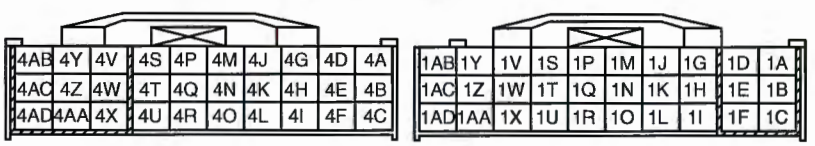

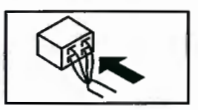

VARIABLE SWIRL SHUTTER VALVE SWITCH WIRING HARNESS SIDE CONNECTOR

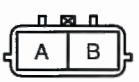

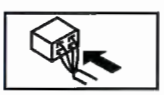

Diagnostic procedure

STEP	INSPECTION		ACTION
1	**VERIFY FREEZE FRAME DATA HAS BEEN RECORDED** • Has the FREEZE FRAME DATA been recorded?	Yes	Go to the next step.
		No	Record FREEZE FRAME DATA on the repair order, then g to the next step.
2	**VERIFY RELATED REPAIR INFORMATION AVAILABILITY** • Check for related Service Bulletins and/or on-line repair information availability. • Is any related repair information available?	Yes	Perform the repair or diagnosis according to the available repair information. • If the vehicle is not repaired, go to the next step.
		No	Go to the next step.
3	**CLASSIFY INTERMITTENT CONCERN OR CONTINUOUS CONCERN** • Clear the DTC from the PCM memory using the WDS or equivalent. • Drive the vehicle under following conditions: — Engine coolant temperature is **above 63 °C {145 °F}**. — Engine speed: **below 3,750 rpm** — Throttle opening angle is as follows: • Engine speed **below 1,500 rpm: above 35%** • Engine speed **between 1,500–2,500 rpm: between 25–35%** • Engine speed **above 2,500: below 25%** • Is the PENDING CODE for this DTC present?	Yes	Go to the next step.
		No	Intermittent concern exists. Go to INTERMITTENT CONCERN TROUBLESHOOTING procedure. (See 01–03B–6 INTERMITTENT CONCERN TROUBLESHOOTING [L3 WITH TC].)
4	**VERIFY STORED OTHER DTCS** • Verify stored DTCs using WDS or equipment. • Is other DTC present except P0117, P0118, P0121, P0122, P0123 and/or P0335?	Yes	Go to appropriate DTC troubleshooting procedures.
		No	Go to the next step.
5	**INSPECT VARIABLE SWIRL SHUTTER VALVE ACTUATOR** • Perform the "Variable Swirl System Operation Inspection". (See 01–03B–86 Variable Swirl System Operation Inspection.) • Is the variable swirl shutter valve actuator normal?	Yes	Go to the next step.
		No	Replace the variable swirl shutter valve actuator, then go to Step 10.
6	**INSPECT VARIABLE SWIRL SOLENOID VALVE** • Perform the "variable swirl solenoid valve airflow inspection". (See 01–13B–13 VARIABLE SWIRL SOLENOID VALVE INSPECTION [L3 WITH TC].) • Is the variable swirl solenoid valve normal?	Yes	Go to the next step.
		No	Replace the variable swirl solenoid valve, then go to Step 10.
7	**INSPECT VARIABLE SWIRL SOLENOID VALVE OR VARIABLE SWIRL SHUTTER VALVE SW CONNECTOR FOR POOR CONNECTION** • Turn the ignition switch to off. • Disconnect the variable swirl solenoid valve connector and the variable swirl shutter valve switch connector. • Inspect for poor connection (such as damaged/ pulled-out pins, corrosion). • Is there any malfunction?	Yes	Repair the terminal, then go to Step 10.
		No	Go to the next step.
8	**INSPECT PCM CONNECTOR FOR POOR CONNECTION** • Inspect for poor connection at the PCM terminals (such as damaged, pulled-out terminals, corrosion). • Is there any malfunction?	Yes	Repair terminal, then go to Step 10.
		No	Go to the next step.

STEP	INSPECTION		ACTION
9	**INSPECT VARIABLE SWIRL SOLENOID VALVE OR VARIABLE SWIRL SHUTTER VALVE SWITCH SIGNAL CIRCUIT FOR SHORT TO GROUND** • Inspect for continuity between the following terminals and body ground. — PCM terminal 4K (harness-side). — PCM terminal 1N (harness-side). • Is there continuity?	Yes	Repair or replace the wiring harness for a short to ground, then go to the next step.
		No	Go to the next step.
10	**VERIFY TROUBLESHOOTING OF DTC P2006 COMPLETED** • Make sure to reconnect all disconnected connectors. • Start the engine. • Clear the DTC from the PCM memory using the WDS or equivalent. • Start the engine. • Drive the vehicle under the following conditions: — Engine coolant temperature is **above 63 °C {145 °F}**. — Engine speed: **below 3,750 rpm** — Throttle opening angle is as follows: • Engine speed **below 1,500 rpm: above 35%** • Engine speed **between 1,500–2,500 rpm: between 25–35%** • Engine speed **above 2,500: below 25%** • Is the PENDING CODE for this DTC present?	Yes	Replace PCM, then go to the next step. (See 01–40B–6 PCM REMOVAL/INSTALLATION [L3 WITH TC].)
		No	Go to the next step.
11	**VERIFY AFTER REPAIR PROCEDURE** • Perform the "After Repair Procedure". (See 01–02B–8 AFTER REPAIR PROCEDURE [L3 WITH TC].) • Are any DTCs present?	Yes	Go to the applicable DTC inspection. (See 01–02B–14 DTC TABLE [L3 WITH TC].)
		No	Troubleshooting completed.

DTC P2009 [L3 WITH TC]

E6U010202000W20

DTC P2009	Variable swirl solenoid valve control circuit low
DETECTION CONDITION	• PCM monitors the variable swirl solenoid valve control signal. If the PCM turns variable swirl solenoid valve off but the voltage still remains low, the PCM determines that the variable swirl solenoid valve control circu has a malfunction. **Diagnostic support note** • This is a continuous monitor (CCM). • MIL illuminates if the PCM detects the above malfunction condition in two consecutive drive cycles or in one drive cycle while the DTC for the same malfunction has been stored in the PCM. • PENDING CODE is available if the PCM detects the above malfunction condition during the first drive cycle. • FREEZE FRAME DATA is available. • DTCs are stored in PCM memory.
POSSIBLE CAUSE	• Poor connection of connectors at PCM and/or variable swirl solenoid valve • Short to ground in the wiring harness between variable swirl solenoid valve terminal B and PCM terminal 4K • Open circuit in the wiring harness between main relay and variable swirl solenoid valve terminal A • Open circuit in the wiring harness between variable swirl solenoid valve terminal B and PCM terminal 4K • Variable swirl solenoid valve malfunction • PCM malfunction

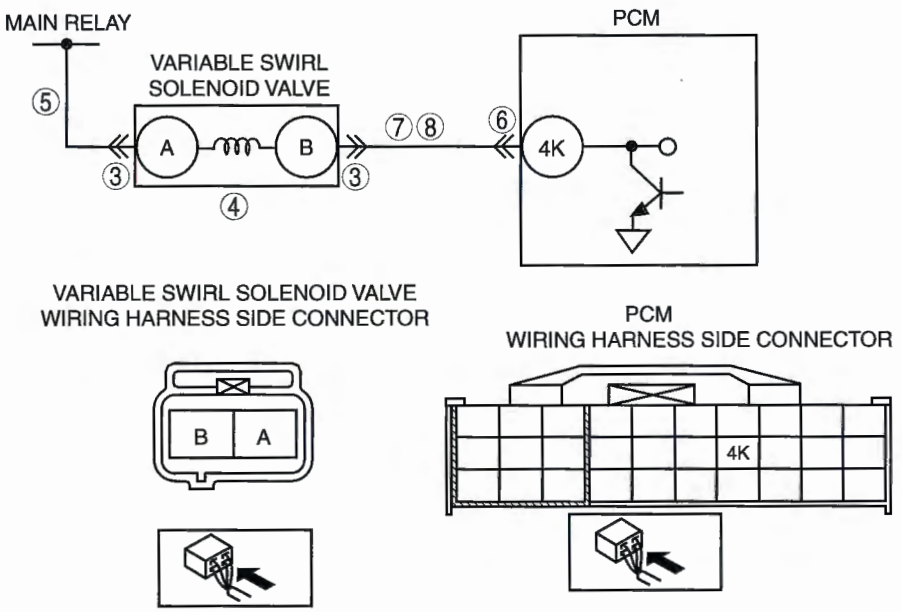

Diagnostic procedure

STEP	INSPECTION		ACTION
1	**VERIFY FREEZE FRAME DATA HAS BEEN RECORDED** • Has the FREEZE FRAME DATA been recorded?	Yes	Go to the next step.
		No	Record FREEZE FRAME DATA on the repair order, then go to the next step.
2	**VERIFY RELATED REPAIR INFORMATION AVAILABILITY** • Check for related Service Bulletins and/or on-line repair information availability. • Is any related repair information available?	Yes	Perform the repair or diagnosis according to the available repair information. • If the vehicle is not repaired, go to the next step.
		No	Go to the next step.
3	**INSPECT VARIABLE SWIRL SOLENOID VALVE CONNECTOR FOR POOR CONNECTION** • Turn the ignition switch off. • Inspect for poor connection (such as damaged/ pulled-out pins, corrosion). • Is there any malfunction?	Yes	Repair or replace the terminal, then go to Step 9.
		No	Go to the next step.
4	**INSPECT VARIABLE SWIRL SOLENOID VALVE** • Perform the variable swirl solenoid valve inspection. (See 01–13B–13 VARIABLE SWIRL SOLENOID VALVE INSPECTION [L3 WITH TC].) • Is the variable swirl solenoid valve normal?	Yes	Go to the next step.
		No	Replace the variable swirl solenoid valve, then go to Step 9.
5	**INSPECT VARIABLE SWIRL SOLENOID VALVE POWER SUPPLY CIRCUIT FOR OPEN CIRCUIT** • Disconnect the variable swirl solenoid valve connector. • Turn ignition switch to the ON position (Engine off). • Measure voltage between variable swirl solenoid valve terminal A (harness-side) and body ground. • Is the voltage **B+**?	Yes	Go to the next step.
		No	Repair or replace the wiring harness for an open circuit, then go to Step 9.
6	**INSPECT PCM CONNECTOR FOR POOR CONNECTION** • Turn the ignition switch off. • Disconnect the PCM connector. • Inspect for poor connection at PCM terminal 4K. (such as damaged, pulled-out pins, corrosion). • Is there any malfunction?	Yes	Repair terminal, then go to Step 9.
		No	Go to the next step.
7	**INSPECT VARIABLE SWIRL SOLENOID VALVE CONTROL CIRCUIT FOR SHORT TO GROUND** • Inspect for continuity between variable swirl solenoid valve terminal B (harness-side) and body ground. • Is there continuity?	Yes	Repair or replace the wiring harness for a short to ground, then go to Step 9.
		No	Go to the next step.
8	**INSPECT VARIABLE SWIRL SOLENOID VALVE CONTROL CIRCUIT FOR OPEN CIRCUIT** • Connect variable swirl solenoid valve connector. • Turn ignition switch to the ON position (Engine off). • Measure the voltage between PCM terminal 4K (harness-side) and body ground. • Is the voltage **B+**?	Yes	Go to the next step.
		No	Repair or replace the wiring harness for an open or short to ground circuit, then go to the next step.
9	**VERIFY TROUBLESHOOTING OF DTC P2009 COMPLETED** • Make sure to reconnect all disconnected connectors. • Clear the DTC from the PCM memory using the WDS or equivalent. • Turn the ignition switch off. • Start the engine and warm it up completely. • Is the PENDING CODE for this DTC present?	Yes	Replace the PCM, then go to the next step. (See 01–40B–6 PCM REMOVAL/INSTALLATION [L3 WITH TC].)
		No	Go to the next step.
10	**VERIFY AFTER REPAIR PROCEDURE** • Perform the "After Repair Procedure". (See 01–02B–8 AFTER REPAIR PROCEDURE [L3 WITH TC].) • Are any DTCs present?	Yes	Go to the applicable DTC inspection. (See 01–02B–14 DTC TABLE [L3 WITH TC].)
		No	Troubleshooting completed.

DTC P2010 [L3 WITH TC]

E6U010202000W21

DTC P2010	Variable swirl solenoid valve control circuit high
DETECTION CONDITION	• PCM monitors the variable swirl solenoid valve control signal. If the PCM turns variable swirl solenoid valve on but the voltage still remains high, the PCM determines that the variable swirl solenoid valve control circuit has a malfunction. **Diagnostic support note** • This is a continuous monitor (CCM). • MIL illuminates if the PCM detects the above malfunction condition in two consecutive drive cycles or in one drive cycle while the DTC for the same malfunction has been stored in the PCM. • PENDING CODE is available if the PCM detects the above malfunction condition during the first drive cycle. • FREEZE FRAME DATA is available. • DTCs are stored in PCM memory.
POSSIBLE CAUSE	• Poor connection of connectors at the PCM and/or the variable swirl solenoid valve • Short to the power supply in the wiring harness between variable swirl solenoid valve terminal B and PCM terminal 4K • Variable swirl solenoid valve malfunction • PCM malfunction

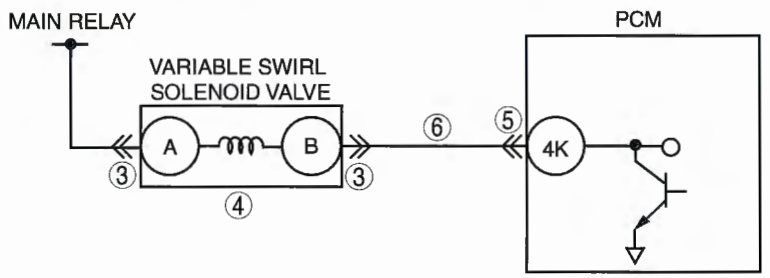

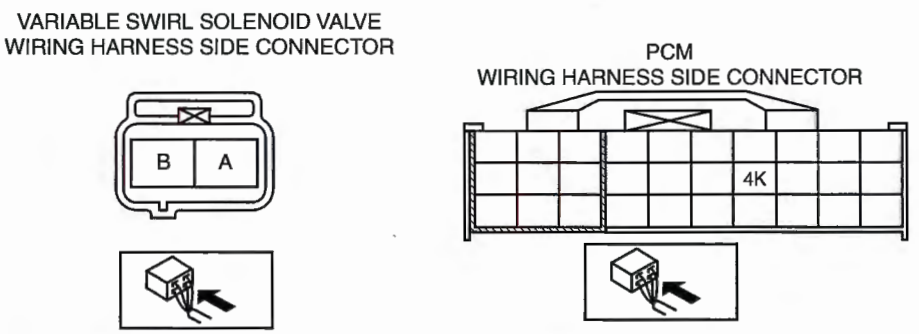

Diagnostic procedure

STEP	INSPECTION		ACTION
1	**VERIFY FREEZE FRAME DATA HAS BEEN RECORDED** • Has the FREEZE FRAME DATA been recorded?	Yes	Go to the next step.
		No	Record FREEZE FRAME DATA on the repair order, then go to the next step.
2	**VERIFY RELATED REPAIR INFORMATION AVAILABILITY** • Check for related Service Bulletins and/or on-line repair information availability. • Is any related repair information available?	Yes	Perform the repair or diagnosis according to the available repair information. • If the vehicle is not repaired, go to the next step.
		No	Go to the next step.
3	**INSPECT VARIABLE SWIRL SOLENOID VALVE CONNECTOR FOR POOR CONNECTION** • Turn the ignition switch off. • Inspect for poor connection (such as damaged/ pulled-out pins, corrosion). • Is there any malfunction?	Yes	Repair or replace the terminal, then go to Step 7.
		No	Go to the next step.
4	**INSPECT VARIABLE SWIRL SOLENOID VALVE** • Perform variable swirl solenoid valve inspection. (See 01–13B–13 VARIABLE SWIRL SOLENOID VALVE INSPECTION [L3 WITH TC].) • Is the variable swirl solenoid valve normal?	Yes	Go to the next step.
		No	Replace the variable swirl solenoid valve, then go to Step 7.
5	**INSPECT PCM CONNECTOR FOR POOR CONNECTION** • Turn the ignition switch off. • Disconnect the PCM connector. • Inspect for poor connection at PCM terminal 4K. (such as damaged, pulled-out pins, corrosion). • Is there any malfunction?	Yes	Repair the terminal, then go to Step 7.
		No	Go to the next step.
6	**INSPECT VARIABLE SWIRL SOLENOID VALVE CONTROL CIRCUIT FOR SHORT TO POWER SUPPLY** • Remove the variable swirl solenoid valve. • Turn ignition switch to the ON position (Engine off). • Measure voltage between PCM terminal 4K (harness-side) and body ground. • Is the voltage **B+**?	Yes	Repair or replace the wiring harness for a short to power supply, then go to the next step.
		No	Go to the next step.
7	**VERIFY TROUBLESHOOTING OF DTC P2010 COMPLETED** • Make sure to reconnect all disconnected connectors. • Clear the DTC from the PCM memory using the WDS or equivalent. • Turn the ignition switch off. • Start the engine and warm it up completely. • Is the PENDING CODE for this DTC present?	Yes	Replace the PCM, then go to the next step. (See 01–40B–6 PCM REMOVAL/INSTALLATION [L3 WITH TC].)
		No	Go to the next step.
8	**VERIFY AFTER REPAIR PROCEDURE** • Perform the "After Repair Procedure". (See 01–02B–8 AFTER REPAIR PROCEDURE [L3 WITH TC].) • Are any DTCs present?	Yes	Go to the applicable DTC inspection. (See 01–02B–14 DTC TABLE [L3 WITH TC].)
		No	Troubleshooting completed.

DTC P2088 [L3 WITH TC]

E6U010202000W22

DTC P2088	OCV actuator circuit low
DETECTION CONDITION	• PCM monitors the OCV voltage. If the PCM detects that the OCV control voltage (calculated from OCV) is below the threshold voltage (calculated from battery positive voltage), the PCM determines that the OCV circuit has a malfunction. **Diagnostic support note** • This is a continuous monitor (CCM). • MIL illuminates if the PCM detects the above malfunction condition during the first drive cycle. • FREEZE FRAME DATA is available. • DTCs are stored in the PCM memory.
POSSIBLE CAUSE	• Poor connection of connectors at the PCM and/or OCV • Short to ground in the wiring harness between OCV terminal A and PCM terminal 4S • Open circuit in the wiring harness between main relay and OCV terminal B • Open circuit in the wiring harness between OCV terminal A and PCM terminal 4S • OCV malfunction • PCM malfunction

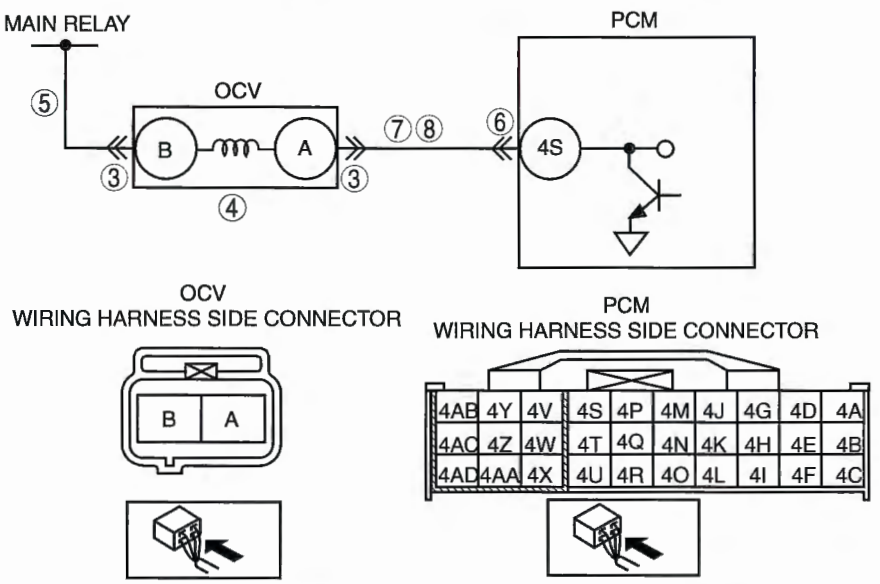

Diagnostic procedure

STEP	INSPECTION		ACTION
1	**VERIFY FREEZE FRAME DATA HAS BEEN RECORDED** • Has the FREEZE FRAME DATA been recorded?	Yes	Go to the next step.
		No	Record FREEZE FRAME DATA on the repair order, then go to the next step.
2	**VERIFY RELATED REPAIR INFORMATION AVAILABILITY** • Check for related Service Bulletins and/or on-line repair information availability. • Is any related repair information available?	Yes	Perform the repair or diagnosis according to the available repair information. • If the vehicle is not repaired, go to the next step.
		No	Go to the next step.
3	**INSPECT OCV CONNECTOR FOR POOR CONNECTION** • Turn the ignition switch off. • Inspect for poor connection (such as damaged/ pulled-out pins, corrosion). • Is there any malfunction?	Yes	Repair or replace the terminal, then go to Step 9.
		No	Go to the next step.
4	**INSPECT OCV** • Perform the OCV inspection. (See 01–10B–38 OIL CONTROL VALVE (OCV) INSPECTION [L3 WITH TC].) • Is the OCV normal?	Yes	Go to the next step.
		No	Replace OCV, then go to Step 9.
5	**INSPECT OCV POWER SUPPLY CIRCUIT FOR OPEN CIRCUIT** • Disconnect the OCV connector. • Turn ignition switch to the ON position (Engine off). • Measure voltage between OCV terminal B (harness-side) and body ground. • Is the voltage **B+**?	Yes	Go to the next step.
		No	Repair or replace the wiring harness for an open circuit, then go to Step 9.
6	**INSPECT PCM CONNECTOR FOR POOR CONNECTION** • Turn the ignition switch off. • Disconnect the PCM connector. • Inspect for poor connection at PCM terminal 4S. (such as damaged, pulled-out pins, corrosion). • Is there any malfunction?	Yes	Repair the terminal, then go to Step 9.
		No	Go to the next step.
7	**INSPECT OCV CONTROL CIRCUIT FOR SHORT TO GROUND** • Inspect for continuity between OCV terminal A (harness-side) and body ground. • Is there continuity?	Yes	Repair or replace the wiring harness for a short to ground, then go to Step 9.
		No	Go to the next step.
8	**INSPECT OCV CONTROL CIRCUIT FOR OPEN CIRCUIT** • Connect the OCV connector. • Turn ignition switch to the ON position (Engine off). • Check for continuity between OCV terminal A (harness-side) and PCM terminal 4S (harness-side). • Is there continuity?	Yes	Go to the next step.
		No	Repair or replace the wiring harness for an open or short to ground circuit, then go to the next step.
9	**VERIFY TROUBLESHOOTING OF DTC P2088 COMPLETED** • Make sure to reconnect all disconnected connectors. • Clear the DTC from the PCM memory using the WDS or equivalent. • Turn the ignition switch off. • Start the engine and warm it up completely. • Is the PENDING CODE for this DTC present?	Yes	Replace PCM, then go to the next step. (See 01–40B–6 PCM REMOVAL/INSTALLATION [L3 WITH TC].)
		No	Go to the next step.
10	**VERIFY AFTER REPAIR PROCEDURE** • Perform the "After Repair Procedure". (See 01–02B–8 AFTER REPAIR PROCEDURE [L3 WITH TC].) • Are any DTCs present?	Yes	Go to the applicable DTC inspection. (See 01–02B–14 DTC TABLE [L3 WITH TC].)
		No	Troubleshooting completed.

DTC P2089 [L3 WITH TC]

E6U010202000W23

DTC P2089	OCV actuator circuit high
DETECTION CONDITION	• PCM monitors the OCV voltage. If the PCM detects that the OCV control voltage (calculated from OCV) is above the threshold voltage (calculated from battery positive voltage), the PCM determines that the OCV circuit has a malfunction. **Diagnostic support note** • This is a continuous monitor (CCM). • MIL illuminates if the PCM detects the above malfunction condition during the first drive cycle. • FREEZE FRAME DATA is available. • DTCs are stored in the PCM memory.
POSSIBLE CAUSE	• Poor connection at the PCM and/or OCV connectors • Short to the power supply in the wiring harness between OCV terminal A and PCM terminal 4S • OCV malfunction • PCM malfunction

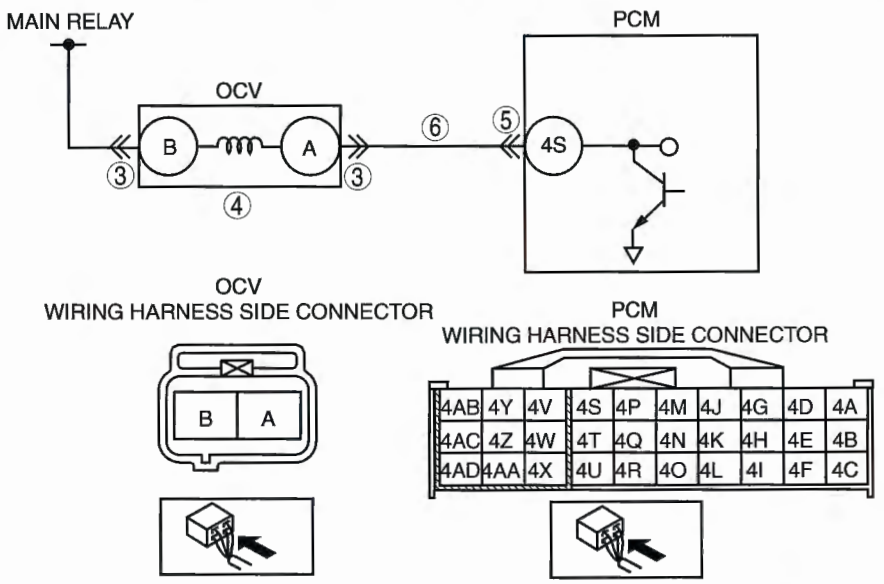

Diagnostic procedure

STEP	INSPECTION		ACTION
1	**VERIFY FREEZE FRAME DATA HAS BEEN RECORDED** • Has the FREEZE FRAME DATA been recorded?	Yes	Go to the next step.
		No	Record FREEZE FRAME DATA on the repair order, then go to the next step.
2	**VERIFY RELATED REPAIR INFORMATION AVAILABILITY** • Check for related Service Bulletins and/or on-line repair information availability. • Is any related repair information available?	Yes	Perform the repair or diagnosis according to the available repair information. • If the vehicle is not repaired, go to the next step.
		No	Go to the next step.
3	**INSPECT OCV CONNECTOR FOR POOR CONNECTION** • Turn the ignition switch to off. • Inspect for poor connection (such as damaged/ pulled-out pins, corrosion). • Is there any malfunction?	Yes	Repair or replace the terminal, then go to Step 7.
		No	Go to the next step.
4	**INSPECT OCV** • Perform the OCV inspection. (See 01–10B–38 OIL CONTROL VALVE (OCV) INSPECTION [L3 WITH TC].) • Is the OCV normal?	Yes	Go to the next step.
		No	Replace the OCV, then go to Step 7.
5	**INSPECT PCM CONNECTOR FOR POOR CONNECTION** • Turn the ignition switch to off. • Disconnect the PCM connector. • Inspect for poor connection at PCM terminal 4S. (such as damaged, pulled-out pins, corrosion). • Is there any malfunction?	Yes	Repair terminal, then go to Step 7.
		No	Go to the next step.
6	**INSPECT OCV CONTROL CIRCUIT FOR SHORT TO POWER SUPPLY** • Remove the OCV. • Turn the ignition switch to the ON position (Engine off). • Measure voltage between PCM terminal 4S and body ground. • Is the voltage **B+**?	Yes	Repair or replace the wiring harness for a short to power supply, then go to the next step.
		No	Go to the next step.
7	**VERIFY TROUBLESHOOTING OF DTC P2089 COMPLETED** • Make sure to reconnect all disconnected connectors. • Clear the DTC from the PCM memory using the WDS or equivalent. • Turn the ignition switch to off. • Start the engine and warm it up completely. • Is the PENDING CODE for this DTC present?	Yes	Replace the PCM, then go to the next step. (See 01–40B–6 PCM REMOVAL/INSTALLATION [L3 WITH TC].)
		No	Go to the next step.
8	**VERIFY AFTER REPAIR PROCEDURE** • Perform the "After Repair Procedure". (See 01–02B–8 AFTER REPAIR PROCEDURE [L3 WITH TC].) • Are any DTCs present?	Yes	Go to the applicable DTC inspection. (See 01–02B–14 DTC TABLE [L3 WITH TC].)
		No	Troubleshooting completed.

DTC P2096 [L3 WITH TC]

E6U010202000W24

DTC P2096	Target A/F feedback system too lean
DETECTION CONDITION	• The PCM monitors the target A/F fuel trim while under target A/F feedback control. If the fuel trim is more than the specification, the PCM determines that the target A/F feedback system is too lean. • Rear HO2S sensor voltage is **more than 0.1 V** **Diagnostic support note** • This is a continuous monitor (Fuel system). • The MIL illuminates if the PCM detects the above malfunctioning condition in two consecutive drive cycles or in one drive cycle while the DTC for the same malfunction has been stored in the PCM. • PENDING CODE is available if the PCM detects the above malfunction condition during the first drive cycle. • FREEZE FRAME DATA is available. • DTCs are stored in the PCM memory.
POSSIBLE CAUSE	• Exhaust gas leakage • Rear HO2S malfunction • IAT sensor malfunction • ECT sensor malfunction • Air suction in intake-air system • Front HO2S malfunction • MAF sensor malfunction • Insufficient fuel line pressure • Fuel pressure sensor malfunction • Relief valve (built-in fuel delivery pipe) malfunction • Spill valve control solenoid valve (built-in high pressure fuel pump) malfunction • High pressure fuel pump malfunction • Fuel pump malfunction • Leakage fuel • Improper operation ignition system • Insufficient engine compression • Fuel injector malfunction • PCM malfunction

Diagnostic procedure

STEP	INSPECTION		ACTION
1	**VERIFY FREEZE FRAME DATA AND DIAGNOSTIC MONITORING TEST RESULTS HAVE BEEN RECORDED** • Have the FREEZE FRAME DATA and DIAGNOSTIC MONITORING TEST RESULTS (Fuel system related) been recorded?	Yes	Go to the next step.
		No	Record the FREEZE FRAME DATA and DIAGNOSTIC MONITORING TEST RESULTS on the repair order, then go to the next step.
2	**VERIFY REPAIR INFORMATION AVAILABILITY** • Verify related service repair information availability. • Is any related repair information available?	Yes	Perform the repair or diagnosis according to the available repair information. If the vehicle is not repaired, go to the next step.
		No	Go to the next step.
3	**VERIFY RELATED PENDING CODE OR STORED DTC** • Turn the ignition switch off then to the ON position (Engine off). • Verify the related PENDING CODE or stored DTCs. • Is the DTC P2177 or P2187 also present?	Yes	Go to the applicable DTC inspection. (See 01–02B–14 DTC TABLE [L3 WITH TC].)
		No	Go to the next step.
4	**IDENTIFY TRIGGER DTC FOR FREEZE FRAME DATA** • Is DTC P2096 on FREEZE FRAME DATA?	Yes	Go to the next step.
		No	Go to FREEZE FRAME DATA DTC inspection. (See 01–02B–14 DTC TABLE [L3 WITH TC].)
5	**VERIFY CURRENT INPUT SIGNAL STATUS OF REAR HO2S** • Connect the WDS or equivalent to the DLC-2. • Start the engine and warm it up completely. • Access O2S12 PID. • Read O2S12 PID under the following accelerator pedal condition (in NEUTRAL). — **More than 0.45 V** when accelerator pedal is suddenly depressed (rich condition). — **Less than 0.45 V** just after release of accelerator pedal (lean condition) • Is the PID normal?	Yes	Go to the next step.
		No	Visually inspect for the exhaust gas leakage between the TWC and rear HO2S. • If there is no leakage, replace the rear HO2S. (See 01–15B–3 HO2S Removal Note.) Then go to Step 20.

STEP	INSPECTION		ACTION
6	**VERIFY CURRENT INPUT SIGNAL STATUS** • Connect the WDS or equivalent to the DLC-2. • Verify the following PIDs. (See 01–40B–6 PCM INSPECTION [L3 WITH TC].) — ECT — MAF — TP — VSS • Are the PIDs normal?	Yes	Go to the next step.
		No	Inspect the malfunctioning part according to the inspection results. Then go to Step 20.
7	**VERIFY CURRENT INPUT SIGNAL STATUS UNDER FREEZE FRAME DATA CONDITION** • Connect the WDS or equivalent to the DLC-2. • Verify the following PIDs under the FREEZE FRAME DATA condition. (See 01–40B–6 PCM INSPECTION [L3 WITH TC].) — ECT — MAF — TP — VSS • Are the PIDs normal?	Yes	Go to the next step.
		No	Inspect the malfunctioning part according to the inspection results. Then go to Step 20.
8	**VERIFY CURRENT INPUT SIGNAL STATUS OF FRONT HO2S** • Connect the WDS or equivalent to the DLC-2. • Start the engine and warm it up completely. • Access the O2S11 PID. • Read the O2S11 PID under following accelerator pedal condition (in NEUTRAL). — **–0.1—0.1A** when idle. — **More than 0.25 mA** just after release of accelerator pedal (lean condition). • Is the PID normal?	Yes	Go to the next step.
		No	Visually inspect for the exhaust gas leakage between the exhaust manifold and front HO2S. • If there is no leakage, replace front HO2S. (See 01–15B–3 HO2S Removal Note.) Then go to Step 20.
9	**VERIFY CURRENT INPUT SIGNAL STATUS OF MAF SENSOR** • Connect the WDS or equivalent to the DLC-2. • Start the engine. • Access the MAF PID. • Verify that the MAF PID changes quickly according to engine speed. • Is the PID normal?	Yes	Go to the next step.
		No	Replace the MAF/IAT sensor, then go to Step 20.
10	**INSPECT INTAKE-AIR SYSTEM FOR EXCESSIVE AIR SUCTION** • Visually inspect the hose in intake-air system for looseness, cracks or damages. • Is there any malfunction?	Yes	Repair or replace the malfunctioning part, then go to Step 20.
		No	Go to the next step.
11	**INSPECT IGNITION COIL WIRING HARNESSES** • Inspect the ignition coil related wiring harness condition (intermittent open or short circuit) for all cylinders. • Are wiring harness conditions normal?	Yes	Go to the next step.
		No	Repair the wiring harnesses, then go to Step 20.
12	**INSPECT IGNITION SYSTEM OPERATION** • Perform the spark test. (See 01–03B–90 Spark Test.) • Is strong blue spark visible at each cylinder?	Yes	Go to the next step.
		No	Repair or replace the malfunctioning part according to spark test result. Then go to Step 20.
13	**INSPECT ENGINE COMPRESSION** • Inspect the engine compression. (See 01–10B–9 COMPRESSION INSPECTION [L3 WITH TC].) • Is there any malfunction?	Yes	Go to the next step.
		No	Overhaul the engine, then go to Step 20.

STEP	INSPECTION		ACTION
14	**INSPECT FUEL PRESSURE (HIGH-SIDE)** • Access and monitor FUEL_PRES PID. • Is the FUEL_PRES PID value within the specified? (See 01–40B–6 Using the WDS or Equivalent.)	Yes	Go to Step 18.
		No	Go to the next step.
15	**IDENTIFY CAUSE BY FUEL PRESSURE SENSOR OR HIGH PRESSURE FUEL PUMP** • Is the vehicle accelerate performance normally?	Yes	Go to the next step.
		No	Go to Step 17.
16	**INSPECT FUEL PRESSURE SENSOR** • Inspect the fuel pressure sensor. (See01–40B–34 FUEL PRESSURE SENSOR INSPECTION [L3 WITH TC].) • Is the fuel pressure sensor normal?	Yes	Go to Step 18.
		No	Replace the fuel delivery pipe, then go to Step 20.
17	**INSPECT HIGH PRESSURE FUEL PUMP** • Replace the high pressure fuel pump. • Monitor FUEL_PRES PID. • Is the FUEL_PRES PID value within the specified? (See01–40B–6 Using the WDS or Equivalent.)	Yes	Go to Step 20.
		No	Go to the next step.
18	**INSPECT FUEL PRESSURE (LOW-SIDE)** • Connect the fuel pressure gauge between fuel pump and high pressure fuel pump. • Measure the low side fuel pressure. (See01–14B–5 FUEL LINE PRESSURE INSPECTION [L3 WITH TC].) • Is the low side fuel pressure within the specified?	Yes	Go to the next step.
		No	Inspect for following: • Fuel line restriction • Fuel filter clogging If okay replace the fuel pump. Then go to Step 20.
19	**INSPECT FUEL INJECTOR** • Inspect the fuel injector. (See 01–14B–29 FUEL INJECTOR INSPECTION [L3 WITH TC].) • Is there any malfunction?	Yes	Replace the fuel injector, then go to the next step. (See 01–14B–25 FUEL INJECTOR REMOVAL/ INSTALLATION [L3 WITH TC].)
		No	Go to the next step.
20	**VERIFY TROUBLESHOOTING OF DTC P2096 COMPLETED** • Make sure to reconnect all disconnected connectors. • Clear the DTC from the PCM memory using the WDS or equivalent. • Perform the PCM Adaptive Memory Produce Drive Mode. (See 01–02B–9 OBD-II DRIVE MODE [L3 WITH TC].) • Is the PENDING CODE for this DTC present?	Yes	Replace the PCM, then go to the next step. (See 01–40B–6 PCM REMOVAL/INSTALLATION [L3 WITH TC].)
		No	Go to the next step.
21	**VERIFY AFTER REPAIR PROCEDURE** • Perform the "AFTER REPAIR PROCEDURE". (See 01–02B–8 AFTER REPAIR PROCEDURE [L3 WITH TC].) • Are any DTCs present?	Yes	Go to the applicable DTC inspection. (See 01–02B–14 DTC TABLE [L3 WITH TC].)
		No	Troubleshooting completed.

DTC P2097 [L3 WITH TC]

E6U010202000W25

DTC P2097	Target A/F feedback system too rich
DETECTION CONDITION	• The PCM monitors the target A/F fuel trim while under target A/F feedback control. If the fuel trim is less than specification, the PCM determines that the target A/F feedback system is too rich. **Diagnostic support note** • This is a continuous monitor. (Fuel system) • The MIL illuminates if the PCM detects the above malfunctioning condition in two consecutive drive cycles or in one drive cycle while the DTC for the same malfunction has been stored in the PCM. • PENDING CODE is available if the PCM detects the above malfunction conditions during the first drive cycle. • FREEZE FRAME DATA is available. • DTCs are stored in the PCM memory.
POSSIBLE CAUSE	• Exhaust gas leakage • Rear HO2S malfunction • IAT sensor malfunction • ECT sensor malfunction • Front HO2S malfunction • Excessive fuel line pressure • Fuel pressure sensor malfunction • Relief valve (built-in fuel delivery pipe) malfunction • Spill valve control solenoid valve (built-in high pressure fuel pump) malfunction • High pressure fuel pump malfunction • Fuel pump malfunction • Purge valve malfunction • Insufficient engine compression • PCM malfunction

Diagnostic procedure

STEP	INSPECTION		ACTION
1	**VERIFY FREEZE FRAME DATA AND DIAGNOSTIC MONITORING TEST RESULTS HAVE BEEN RECORDED** • Have the FREEZE FRAME DATA and DIAGNOSTIC MONITORING TEST RESULTS (Fuel system related) been recorded?	Yes	Go to the next step.
		No	Record the FREEZE FRAME DATA and DIAGNOSTIC MONITORING TEST RESULTS on the repair order, then go to the next step.
2	**VERIFY REPAIR INFORMATION AVAILABILITY** • Verify related service repair information availability. • Is any related repair information available?	Yes	Perform the repair or diagnosis according to the available repair information. If the vehicle is not repaired, go to the next step.
		No	Go to the next step.
3	**VERIFY RELATED PENDING CODE OR STORED DTC** • Turn the ignition switch off, then to the ON position (Engine off). • Verify the related PENDING CODE or stored DTCs. • Is the DTC P2178 or P2188 also present?	Yes	Go to the applicable DTC inspection. (See 01–02B–14 DTC TABLE [L3 WITH TC].)
		No	Go to the next step.
4	**IDENTIFY TRIGGER DTC FOR FREEZE FRAME DATA** • Is DTC P2097 on FREEZE FRAME DATA?	Yes	Go to the next step.
		No	Go to FREEZE FRAME DATA DTC inspection. (See 01–02B–14 DTC TABLE [L3 WITH TC].)
5	**VERIFY CURRENT INPUT SIGNAL STATUS OF REAR HO2S** • Connect the WDS or equivalent to the DLC-2. • Start the engine and warm it up completely. • Access the O2S12 PID. • Read the O2S12 PID under following accelerator pedal condition (in NEUTRAL). — **More than 0.45 V** when accelerator pedal is suddenly depressed (rich condition). — **Less than 0.45 V** just after release of accelerator pedal (lean condition) • Is the PID normal?	Yes	Go to the next step.
		No	Visually inspect for the exhaust gas leakage between TWC and rear HO2S. • If there is no leakage, replace rear HO2S. (See 01–15B–3 HO2S Removal Note.) Then go to Step 15.
6	**VERIFY CURRENT INPUT SIGNAL STATUS** • Connect the WDS or equivalent to the DLC-2. • Verify the following PIDs: (See 01–40B–6 PCM INSPECTION [L3 WITH TC].) — ECT — MAF — TP — VSS • Are the PIDs normal?	Yes	Go to the next step.
		No	Inspect the malfunctioning part according to the inspection results. Then go to Step 15.
7	**VERIFY CURRENT INPUT SIGNAL STATUS UNDER FREEZE FRAME DATA CONDITION** • Connect the WDS or equivalent to the DLC-2. • Verify the following PIDs under FREEZE FRAME DATA condition. (See 01–40B–6 PCM INSPECTION [L3 WITH TC].) — ECT — MAF — TP — VSS • Are the PIDs normal?	Yes	Go to the next step.
		No	Inspect the malfunctioning part according to the inspection results. Then go to Step 15.

STEP	INSPECTION		ACTION
8	**VERIFY CURRENT INPUT SIGNAL STATUS OF FRONT HO2S** • Connect the WDS or equivalent to the DLC-2. • Start the engine and warm it up completely. • Access the O2S11 PID. • Read the O2S11 PID under following accelerator pedal condition (in NEUTRAL). — **–0.1—0.1A** when idle — **More than 0.25 mA** just after release of accelerator pedal (lean condition). • Is the PID normal?	Yes	Go to the next step.
		No	Visually inspect for exhaust gas leakage between the exhaust manifold and front HO2S. • If there is no leakage, replace front HO2S. (See 01–15B–3 HO2S Removal Note.) Then go to Step 15.
9	**INSPECT FUEL PRESSURE (HIGH-SIDE)** • Access and monitor FUEL_PRES PID. • Is the FUEL_PRES PID value within the specified? (See01–40B–6 Using the WDS or Equivalent.)	Yes	Go to Step 14.
		No	Go to the next step.
10	**IDENTIFY CAUSE BY FUEL PRESSURE SENSOR OR HIGH PRESSURE FUEL PUMP** • Is the vehicle accelerate performance normally?	Yes	Go to the next step.
		No	Go to Step 12.
11	**INSPECT FUEL PRESSURE SENSOR** • Inspect the fuel pressure sensor. (See01–40B–34 FUEL PRESSURE SENSOR INSPECTION [L3 WITH TC].) • Is the fuel pressure sensor normal?	Yes	Go to Step 14.
		No	Replace the fuel delivery pipe, then go to Step 15.
12	**INSPECT HIGH PRESSURE FUEL PUMP** • Replace the high pressure fuel pump. • Monitor FUEL_PRES PID. • Is the FUEL_PRES PID value within the specified? (See 01–40B–6 Using the WDS or Equivalent.)	Yes	Go to Step 15.
		No	Go to the next step.
13	**INSPECT FUEL PRESSURE (LOW-SIDE)** • Connect the fuel pressure gauge between fuel pump and high pressure fuel pump. • Measure the low side fuel pressure. (See 01–14B–5 FUEL LINE PRESSURE INSPECTION [L3 WITH TC].) • Is the low side fuel pressure within the specified?	Yes	Go to the next step.
		No	Inspect for following: • Fuel line restriction • Fuel filter clogging If normal replace the fuel pump. Then go to Step 15.
14	**INSPECT LONG TERM FUEL TRIM** • Connect the WDS or equivalent to the DLC_2. • Access LONGFT1 PID. • Compare the LONGFT1 PID with recorded FREEZE FRAME DATA at Step 1. • Is the LONGFT1 PID above FREEZE FRAME DATA?	Yes	Inspect the purge valve. (See 01–16B–10 PURGE SOLENOID VALVE INSPECTION [L3 WITH TC].) • If there is any malfunction, replace the purge valve. (See 01–13B–4 VACUUM HOSE ROUTING DIAGRAM [L3 WITH TC].) Then go to the next step.
		No	Go to the next step.
15	**VERIFY TROUBLESHOOTING OF DTC P2097 COMPLETED** • Make sure to reconnect all disconnected connectors. • Clear the DTC from the PCM memory using the WDS or equivalent. • Perform the PCM Adaptive Memory Produce Drive Mode. (See 01–02B–9 OBD-II DRIVE MODE [L3 WITH TC].) • Is the PENDING CODE for this DTC present?	Yes	Replace the PCM, then go to the next step. (See 01–40B–6 PCM REMOVAL/INSTALLATION [L3 WITH TC].)
		No	Go to the next step.
16	**VERIFY AFTER REPAIR PROCEDURE** • Perform the "AFTER REPAIR PROCEDURE". (See 01–02B–8 AFTER REPAIR PROCEDURE [L3 WITH TC].) • Are any DTCs present?	Yes	Go to the applicable DTC inspection. (See 01–02B–14 DTC TABLE [L3 WITH TC].)
		No	Troubleshooting completed.

DTC P2100 [L3 WITH TC]

E6U010202100W29

DTC P2100	Throttle actuator circuit open
DETECTION CONDITION	• PCM monitors the electronic throttle valve motor current. If the PCM detects that the electronic throttle valve motor current is below the threshold current, the PCM determines that the electronic throttle valve motor circuit has a malfunction. **Diagnostic support note** • This is a continuous monitor (CCM). • MIL illuminates if the PCM detects the above malfunction condition during the first drive cycle. • FREEZE FRAME DATA is available. • DTCs are stored in PCM memory.
POSSIBLE CAUSE	• Throttle valve motor malfunction • Open circuit between throttle body terminal F and PCM terminal 4Y • Open circuit between throttle body terminal E and PCM terminal 4AB • Poor connection of throttle body connector or PCM connector • PCM malfunction

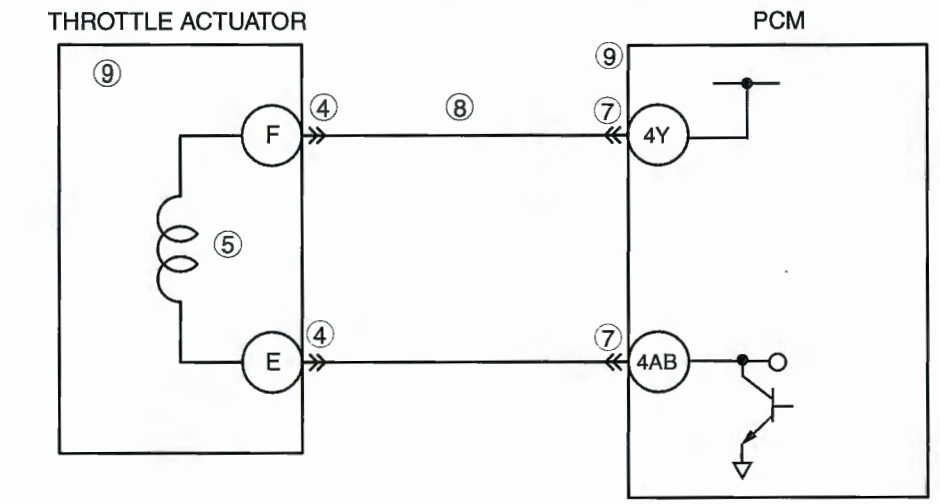

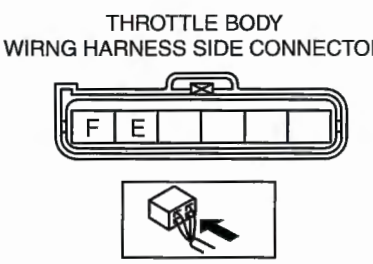

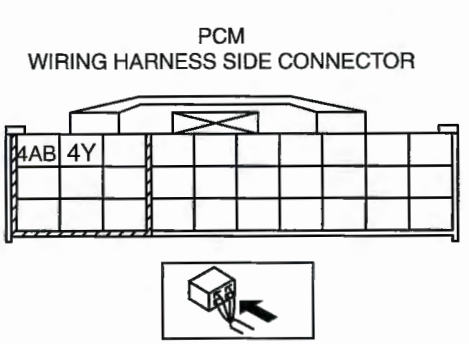

Diagnostic procedure

STEP	INSPECTION		ACTION
1	**VERIFY FREEZE FRAME DATA HAS BEEN RECORDED** • Has the FREEZE FRAME DATA been recorded?	Yes	Go to the next step.
		No	Record FREEZE FRAME DATA on the repair order, then go to the next step.
2	**VERIFY RELATED REPAIR INFORMATION AVAILABILITY** • Check for related Service Bulletins and/or on-line repair information availability. • Is any related repair information available?	Yes	Perform the repair or diagnosis according to the available repair information. • If the vehicle is not repaired, go to the next step.
		No	Go to the next step.
3	**CLASSIFY INTERMITTENT CONCERN OR CONTINUOUS CONCERN** • Clear the DTC using the WDS or equivalent. • Start the engine and let it idle. • Is the same PENDING CODE present?	Yes	Go to the next step.
		No	Go to INTERMITTENT CONCERNS TROUBLESHOOTING procedure. (See 01–03B–6 INTERMITTENT CONCERN TROUBLESHOOTING [L3 WITH TC].)

STEP	INSPECTION		ACTION
4	**INSPECT THROTTLE BODY CONNECTOR FOR POOR CONNECTION** • Turn the ignition switch to off. • Disconnect the throttle body connector. • Check for poor connection (such as damaged, pulled out terminals, corrosion). • Is there any malfunction?	Yes	Repair or replace the terminal, then go to Step 13.
		No	Go to the next step.
5	**INSPECT THROTTLE VALVE ELECTRICAL MALFUNCTION** • Measure resistance between throttle body terminal E and F (part-side). • Is resistance approx. **1.3 ohms**?	Yes	Go to the next step.
		No	Replace the throttle body, then go to Step 13.
6	**CLASSIFY MALFUNCTION ET POWER SUPPLY CIRCUIT OR CONTROL CIRCUIT** • Turn ignition switch to the ON position (Engine off). • Measure the voltage between throttle body terminal F (harness-side) and body ground. • Is the voltage **B+**?	Yes	Malfunction at control circuit. Go to the next step.
		No	Malfunction at power supply circuit. Go to the next step.
7	**INSPECT PCM CONNECTOR FOR POOR CONNECTION** • Turn the ignition switch to off. • Disconnect the PCM connector. • Check for poor connection (such as damaged, pulled out terminals, corrosion). • Is there any malfunction?	Yes	Repair terminal, then go to Step 13.
		No	Go to the next step.
8	**INSPECT POWER CIRCUIT FOR SHORT TO GROUND** • Turn the ignition switch to off. • Check for continuity between throttle body terminal F (harness-side) and body ground. • Is there continuity?	Yes	Repair or replace the wiring harness to a short to ground, then go to Step 13.
		No	Go to the next step.
9	**INSPECT POWER CIRCUIT FOR OPEN CIRCUIT** • Turn the ignition switch to off. • Check for continuity between throttle body terminal F (harness-side) and PCM terminal 4Y (harness-side). • Is there continuity?	Yes	Go to the next step.
		No	Repair or replace the wiring harness for an open circuit, then go to Step 13.
10	**INSPECT CONTROL CIRCUIT FOR SHORT TO POWER SUPPLY** • Turn ignition switch to the ON position (Engine off). • Measure the voltage between throttle body terminal E (harness-side) and body ground. • Is the voltage **B+**?	Yes	Repair or replace the wiring harness for a short to power supply, then go to Step 13.
		No	Go to the next step.
11	**INSPECT CONTROL CIRCUIT FOR SHORT TO GROUND** • Turn the ignition switch to off. • Check for continuity between throttle body terminal E (harness-side) and body ground. • Is there continuity?	Yes	Repair or replace the wiring harness for a short to ground, then go to Step 13.
		No	Go to the next step.
12	**INSPECT CONTROL CIRCUIT MALFUNCTION FOR OPEN CIRCUIT** • Check for continuity between throttle body terminal E (harness-side) and PCM terminal 4AB (harness-side). • Is there continuity?	Yes	Go to the next step.
		No	Repair or replace the wiring harness for an open circuit, then go to the next step.

STEP	INSPECTION		ACTION
13	**VERIFY TROUBLESHOOTING OF DTC P2100 COMPLETED** • Make sure to reconnect all disconnected connectors. • Turn ignition switch to the ON position (Engine off). • Clear the DTC from the PCM memory using the WDS or equivalent. • Start engine and warm it up completely. • Is the same DTC present?	Yes	Replace the PCM, then go to the next step. (See 01–40B–6 PCM REMOVAL/INSTALLATION [L3 WITH TC].)
		No	Go to the next step.
14	**VERIFY AFTER REPAIR PROCEDURE** • Perform the "After Repair Procedure". (See 01–02B–8 AFTER REPAIR PROCEDURE [L3 WITH TC].) • Are any DTCs present?	Yes	Go to the applicable DTC inspection. (See 01–02B–14 DTC TABLE [L3 WITH TC].)
		No	Troubleshooting completed.

DTC P2101 [L3 WITH TC]

E6U010202100W30

DTC P2101	Throttle actuator circuit range/performance
DETECTION CONDITION	• If the PCM detects any of the following conditions, the PCM determines that the throttle circuit has a malfunction. — Default throttle angle that the PCM stored and the throttle angle with drive-by-wire-relay off is not significant. — Voltage from drive-by-wire-relay is too high or too low — PCM detects large voltage difference between the drive-by-wire-relay and the main relay — PCM internal malfunction **Diagnostic support note** • This is a continuous monitor. • MIL illuminates if the PCM detects the above malfunction condition during the first drive cycle. • FREEZE FRAME DATA is available. • DTCs are stored in PCM memory.
POSSIBLE CAUSE	• Drive-by-wire-relay and related circuit malfunction • Main relay and related circuit malfunction • Throttle position sensor No.1 and related circuit malfunction • Throttle position sensor No.2 and related circuit malfunction • PCM malfunction

Diagnostic procedure

STEP	INSPECTION		ACTION
1	**VERIFY FREEZE FRAME DATA HAS BEEN RECORDED** • Has the FREEZE FRAME DATA been recorded?	Yes	Go to the next step.
		No	Record FREEZE FRAME DATA on the repair order, then go to the next step.
2	**VERIFY RELATED REPAIR INFORMATION AVAILABILITY** • Check for related Service Bulletins and/or on-line repair information availability. • Is any related repair information available?	Yes	Perform the repair or diagnosis according to the available repair information. • If the vehicle is not repaired, go to the next step.
		No	Go to the next step.
3	**VERIFY RELATED PENDING AND STORED DTCS** • Turn ignition switch to OFF, then ON (Engine off). • Verify pending and stored DTCs using the WDS or equivalent. • Are any DTCs present?	Yes	Go to appropriate DTC troubleshooting procedure.
		No	Go to the next step.
4	**IDENTIFY TRIGGER DTC FOR FREEZE FRAME DATA** • Is DTC P2101 on FREEZE FRAME DATA?	Yes	Go to the next step.
		No	Go to troubleshooting procedures for DTC on FREEZE FRAME DATA.
5	**INSPECT PCM CONNECTOR FOR POOR CONNECTION** • Turn the ignition switch to off. • Disconnect the PCM connector. • Inspect for poor connection (such as damaged, pulled out terminals, corrosion). • Is there any malfunction?	Yes	Repair or replace the terminal, then go to Step 22.
		No	Go to the next step.
6	**INSPECT MAIN RELAY OUTPUT VOLTAGE** • Turn the ignition switch to off. • Connect the PCM connector. • Turn ignition switch to the ON position (Engine off). • Measure the voltage between PCM terminal 2Y and body ground. • Is the voltage **B+**?	Yes	Go to Step 13.
		No	Go to the next step.
7	**INSPECT MAIN RELAY CONNECTOR FOR POOR CONNECTION** • Turn the ignition switch to off. • Disconnect the main relay. • Inspect for poor connection (such as damaged, pulled out terminals, corrosion). • Is there any malfunction?	Yes	Repair or replace the terminal, then go to Step 22.
		No	Go to the next step.
8	**INSPECT POWER SUPPLY OF MAIN RELAY** • Turn ignition switch to the ON position (Engine off). • Measure the voltage between main relay terminal D (harness-side) and body ground. • Is the voltage **B+**?	Yes	Go to the next step.
		No	Repair or replace the wiring harness for an open circuit, then go to Step 22.
9	**INSPECT POWER SUPPLY FOR CONTROL CIRCUIT OF MAIN RELAY** • Turn ignition switch to the ON position (Engine off). • Measure the voltage between main relay terminal A (harness-side) and body ground. • Is the voltage **B+**?	Yes	Go to the next step.
		No	Repair or replace the wiring harness for an open circuit, then go to Step 22.
10	**INSPECT MAIN RELAY** • Inspect the main relay. (See 09–21–7 RELAY INSPECTION.) • Is the main relay normal?	Yes	Go to the next step.
		No	Replace the main relay, then go to Step 22.

STEP	INSPECTION		ACTION
11	**INSPECT POWER CIRCUIT FOR OPEN CIRCUIT** • Turn the ignition switch to off. • Disconnect the main relay and the PCM connector. • Check for continuity between main relay terminal C (harness-side) and PCM terminal 2Y (harness-side). • Is there continuity?	Yes	Go to the next step.
		No	Repair or replace the wiring harness for an open circuit, then go to Step 22.
12	**INSPECT CONTROL CIRCUIT FOR OPEN CIRCUIT** • Check for continuity between main relay terminal E (harness-side) and PCM terminal 2X (harness-side). • Is there continuity?	Yes	Go to the next step.
		No	Repair or replace the wiring harness for an open circuit, then go to Step 22.
13	**INSPECT DRIVE-BY-WIRE-RELAY OUTPUT VOLTAGE** • Turn ignition switch to the ON position (Engine off). • Measure the voltage between PCM terminal 4V (harness-side) and body ground. • Is the voltage **B+**?	Yes	Go to the next step.
		No	Repair or replace the wiring harness for a short to power supply, then go to Step 22.
14	**INSPECT DRIVE-BY-WIRE-RELAY CONNECTOR FOR POOR CONNECTION** • Turn the ignition switch to off. • Disconnect the drive-by-wire-relay. • Check drive-by-wire-relay connector (harness-side) for poor connection (such as damaged, pulled out terminals, corrosion). • Is there any malfunction?	Yes	Repair or replace the terminal, then go to Step 22.
		No	Go to the next step.
15	**INSPECT POWER SUPPLY OF DRIVE-BY-WIRE-RELAY** • Turn ignition switch to the ON position (Engine off). • Measure the voltage between drive-by-wire-relay terminal D (harness-side) and body ground.	Yes	Go to the next step.
		No	Repair or replace the wiring harness for an open circuit, then go to Step 22.
16	**INSPECT POWER SUPPLY FOR CONTROL CIRCUIT OF DRIVE-BY-WIRE-RELAY** • Turn ignition switch to the ON position (Engine off). • Measure the voltage between drive-by-wire-relay terminal E (harness-side) and body ground. • Is the voltage **B+**?	Yes	Go to the next step.
		No	Repair or replace the wiring harness for an open circuit between drive-by-wire-relay terminal E and main relay terminal C, then go to Step 22.
17	**INSPECT DRIVE-BY-WIRE-RELAY** • Inspect the drive-by-wire-relay. (See 09–21–7 RELAY INSPECTION.) • Is the drive-by-wire-relay normal?	Yes	Go to the next step.
		No	Replace the drive-by-wire-relay, then go to Step 22.
18	**INSPECT POWER CIRCUIT FOR OPEN CIRCUIT** • Turn the ignition switch to off. • Check for continuity between drive-by-wire-relay terminal C (harness-side) and PCM terminal 4V (harness-side). • Is there continuity?	Yes	Go to the next step.
		No	Repair or replace the wiring harness for an open circuit, then go to Step 22.
19	**INSPECT CONTROL CIRCUIT FOR OPEN CIRCUIT** • Check for continuity between drive-by-wire-relay A (harness-side) and PCM terminal 3C (harness-side).	Yes	Go to the next step.
		No	Repair or replace the wiring harness for an open circuit, then go to Step 22.

STEP	INSPECTION		ACTION
20	**INSPECT THROTTLE POSITION SENSOR NO.1 OUTPUT VOLTAGE** • Turn the ignition switch to off. • Connect the PCM connector. • Turn ignition switch to the ON position (Engine off). • Check voltage between PCM terminal 3M and body ground. • Is the voltage **0.40—0.60 V**?	Yes	Go to the next step.
		No	Check the throttle position sensor No.1 and related circuits and terminal. (See 01–40B–27 THROTTLE POSITION (TP) SENSOR INSPECTION [L3 WITH TC].) Repair or replace if necessary, then go to Step 22.
21	**INSPECT THROTTLE POSITION SENSOR NO.2 OUTPUT VOLTAGE** • Turn ignition switch to the ON position (Engine off). • Check the voltage between PCM terminal 3J and body ground. • Is the voltage **4.40—4.60 V**?	Yes	Go to the next step.
		No	Check the throttle position sensor No.2 and related circuits and terminal. (See 01–40B–27 THROTTLE POSITION (TP) SENSOR INSPECTION [L3 WITH TC].) Repair or replace as necessary, then go to the next step.
22	**VERIFY TROUBLESHOOTING OF DTC P2101 COMPLETED** • Make sure to reconnect all disconnected connectors. • Turn ignition switch to the ON position (Engine off). • Clear the DTC from the PCM memory using the WDS or equivalent. • Start the engine and run it at idle. • Turn ignition switch to OFF then ON (Engine off). • Is the same DTC present?	Yes	Replace the PCM, then go to the next step. (See 01–40B–6 PCM REMOVAL/INSTALLATION [L3 WITH TC].)
		No	Go to the next step.
23	**VERIFY AFTER REPAIR PROCEDURE** • Perform the "After Repair Procedure". (See 01–02B–8 AFTER REPAIR PROCEDURE [L3 WITH TC].) • Are any DTCs present?	Yes	Go to the applicable DTC inspection. (See 01–02B–14 DTC TABLE [L3 WITH TC].)
		No	Troubleshooting completed.

DTC P2102 [L3 WITH TC]

E6U010202100W31

DTC P2102	Throttle actuator circuit low input
DETECTION CONDITION	• PCM monitors the throttle actuator circuit current. If the PCM detects that the throttle actuator circuit current is excessively low, the PCM determines that the throttle actuator circuit was a malfunction. **Diagnostic support note** • This is a continuous monitor (CCM). • MIL illuminates if the PCM detects the above malfunction condition during the first drive cycle. • FREEZE FRAME DATA is available. • DTCs are stored in PCM memory.
POSSIBLE CAUSE	• Open circuit between throttle body terminal F and PCM terminal 4Y • Open circuit between throttle body terminal E and PCM terminal 4AB • Short to ground circuit between throttle body terminal F and PCM terminal 4Y • Short to ground circuit between throttle body terminal E and PCM terminal 4AB • Poor connection of throttle body or PCM connector • Throttle valve motor malfunction • PCM malfunction

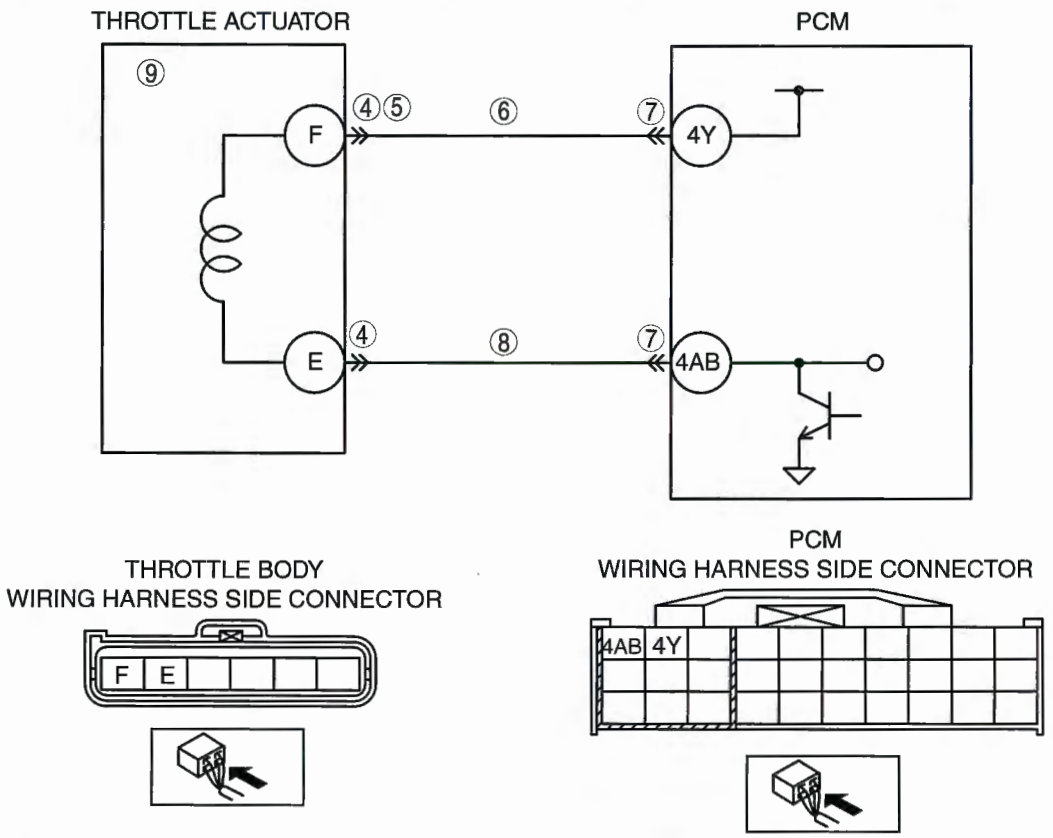

Diagnostic procedure

STEP	INSPECTION		ACTION
1	**VERIFY FREEZE FRAME DATA HAS BEEN RECORDED** • Has the FREEZE FRAME DATA been recorded?	Yes	Go to the next step.
		No	Record FREEZE FRAME DATA on the repair order, then go to the next step.
2	**VERIFY RELATED REPAIR INFORMATION AVAILABILITY** • Check for related Service Bulletins and/or on-line repair information availability. • Is any related repair information available?	Yes	Perform the repair or diagnosis according to the available repair information. • If the vehicle is not repaired, go to the next step.
		No	Go to the next step.

STEP	INSPECTION		ACTION
3	**VERIFY RELATED PENDING CODE AND STORED DTCS** • Turn ignition switch to OFF, then ON (Engine off). • Verify pending and/or stored DTCs using the WDS or equivalent. • Is the DTC P2100 also present?	Yes	Go to appropriate the DTC troubleshooting procedure, then go to Step 10.
		No	Go to the next step.
4	**INSPECT THROTTLE BODY CONNECTOR FOR POOR CONNECTION** • Turn the ignition switch to off. • Disconnect the throttle body connector. • Inspect for poor connection (such as damaged, pulled-put pins, corrosion). • Is there any malfunction?	Yes	Repair or replace the terminal, then go to Step 10.
		No	Go to the next step.
5	**INSPECT POWER SUPPLY CIRCUIT OF THROTTLE ACTUATOR FOR OPEN CIRCUIT** • Turn ignition switch to the ON position (Engine off). • Measure the voltage between throttle body terminal F (harness-side) and body ground. • Is the voltage **B+**?	Yes	Go to the next step.
		No	Repair or replace the wiring harness for an open circuit, then go to Step 10.
6	**INSPECT POWER SUPPLY CIRCUIT OF THROTTLE ACTUATOR FOR SHORT TO GROUND** • Turn the ignition switch to off. • Check continuity between throttle body terminal F (harness-side) and body ground. • Is there continuity?	Yes	Repair or replace the wiring harness for a short to ground circuit, then go to Step 10.
		No	Go to the next step.
7	**INSPECT PCM CONNECTOR FOR POOR CONNECTION** • Turn the ignition switch to off. • Disconnect the PCM connector. • Inspect for poor connection (such as damaged/ pulled-out pins, corrosion). • Is there any malfunction?	Yes	Repair or replace the terminal, then go to Step 10.
		No	Go to the next step.
8	**INSPECT CONTROL CIRCUIT OF THROTTLE ACTUATOR FOR OPEN CIRCUIT** • Turn the ignition switch to off. • Check for continuity between throttle body terminal E (harness-side) and PCM terminal 4AB (harness-side). • Is there continuity?	Yes	Repair or replace the wiring harness for an open circuit, then go to Step 10.
		No	Go to the next step.
9	**INSPECT THROTTLE ACTUATOR** • Inspect the throttle actuator. (See 01–13B–12 THROTTLE ACTUATOR INSPECTION [L3 WITH TC].) • Is it normal?	Yes	Go to the next step.
		No	Replace the throttle body, then go to the next step.
10	**VERIFY TROUBLESHOOTING OF DTC P2102 COMPLETED** • Make sure to reconnect all disconnected connectors. • Turn ignition switch to the ON position (Engine off). • Clear the DTC from the PCM memory using the WDS or equivalent. • Start engine and warm it up completely. • Is the same DTC present?	Yes	Replace the PCM, then go to the next step. (See 01–40B–6 PCM REMOVAL/INSTALLATION [L3 WITH TC].)
		No	Go to the next step.
11	**VERIFY AFTER REPAIR PROCEDURE** • Perform the "After Repair Procedure". (See 01–02B–8 AFTER REPAIR PROCEDURE [L3 WITH TC].) • Are any DTCs present?	Yes	Go to the applicable DTC inspection. (See 01–02B–14 DTC TABLE [L3 WITH TC].)
		No	Troubleshooting completed.

DTC P2103 [L3 WITH TC]

E6U010202100W32

DTC P2103	Throttle actuator circuit high input
DETECTION CONDITION	• PCM monitors the throttle actuator circuit current. If the PCM detects that the throttle actuator circuit current is excessively high, the PCM determines that the electronic throttle actuator circuit has a malfunction. **Diagnostic support note** • This is a continuous monitor (CCM). • MIL illuminates if the PCM detects the above malfunction condition during the first drive cycle. • FREEZE FRAME DATA is available. • DTCs are stored in PCM memory.
POSSIBLE CAUSE	• Short to the power supply between throttle body terminal E and PCM terminal 4AB • Throttle valve motor malfunction • PCM malfunction

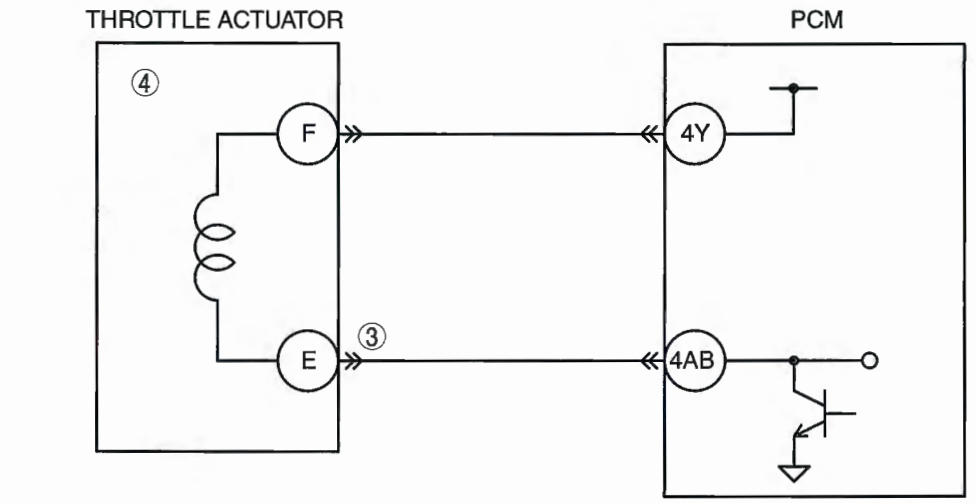

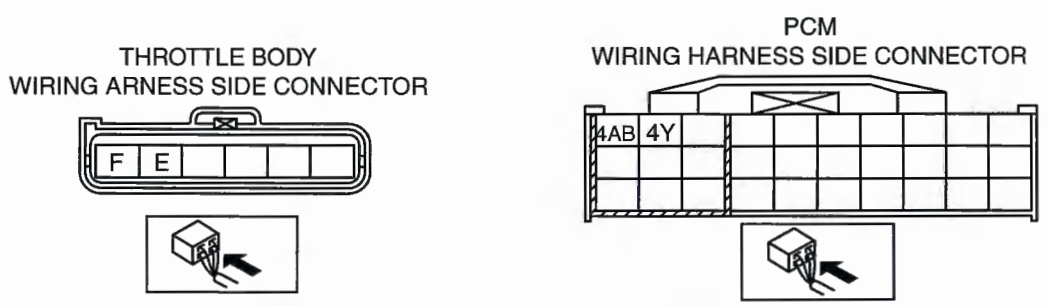

Diagnostic procedure

STEP	INSPECTION		ACTION
1	**VERIFY FREEZE FRAME DATA HAS BEEN RECORDED** • Has the FREEZE FRAME DATA been recorded?	Yes	Go to the next step.
		No	Record FREEZE FRAME DATA on the repair order, then go to the next step.
2	**VERIFY RELATED REPAIR INFORMATION AVAILABILITY** • Check for related Service Bulletins and/or on-line repair information availability. • Is any related repair information available?	Yes	Perform the repair or diagnosis according to the available repair information. • If the vehicle is not repaired, go to the next step.
		No	Go to the next step.
3	**INSPECT CONTROL CIRCUIT OF THROTTLE ACTUATOR FOR SHORT TO POWER SUPPLY** • Turn the ignition switch to off. • Disconnect the throttle body and PCM connectors. • Turn ignition switch to the ON position (Engine off). • Measure the voltage between throttle body terminal E (harness-side) and body ground. • Is the voltage **B+**?	Yes	Repair or replace the wiring harness for a short to power supply, then go to Step 5.
		No	Go to the next step.
4	**INSPECT THROTTLE ACTUATOR** • Inspect the throttle actuator. (See 01–13B–12 THROTTLE ACTUATOR INSPECTION [L3 WITH TC].) • Is it normal?	Yes	Go to the next step.
		No	Replace the throttle body, then go to the next step.
5	**VERIFY TROUBLESHOOTING OF DTC P2103 COMPLETED** • Make sure to reconnect all disconnected connectors. • Turn ignition switch to the ON position (Engine off). • Clear the DTC from the PCM memory using the WDS or equivalent. • Start the engine and warm it up completely. • Is the same DTC present?	Yes	Replace the PCM, then go to the next step. (See 01–40B–6 PCM REMOVAL/INSTALLATION [L3 WITH TC].)
		No	Go to the next step.
6	**VERIFY AFTER REPAIR PROCEDURE** • Perform the "After Repair Procedure". (See 01–02B–8 AFTER REPAIR PROCEDURE [L3 WITH TC].) • Are any DTCs present?	Yes	Go to the applicable DTC inspection. (See 01–02B–14 DTC TABLE [L3 WITH TC].)
		No	Troubleshooting completed.

DTC P2107 [L3 WITH TC]

E6U010202100W33

DTC P2107	Throttle actuator control module processor problem
DETECTION CONDITION	• Throttle actuator control module internal processor error **Diagnostic support note** • This is a continuous monitor (CCM). • The MIL illuminates if the PCM detects the above malfunction condition in the first drive cycle. • FREEZE FRAME DATA is available. • DTCs are stored in the PCM memory.
POSSIBLE CAUSE	• Throttle actuator control module internal processor malfunction

Diagnostic procedure

STEP	INSPECTION		ACTION
1	**VERIFY FREEZE FRAME DATA HAS BEEN RECORDED** • Has the FREEZE FRAME DATA been recorded?	Yes	Go to the next step.
		No	Record the FREEZE FRAME DATA on the repair order, then go to the next step.
2	**VERIFY RELATED REPAIR INFORMATION AVAILABILITY** • Verify related Service Bulletins and/or on-line repair information availability. • Is any related repair information available?	Yes	Perform the repair or diagnosis according to the available repair information. • If the vehicle is not repaired, go to the next step.
		No	Go to the next step.
3	**VERIFY TROUBLESHOOTING OF P2107 COMPLETED** • Make sure to reconnect all disconnected connectors. • Clear the DTC from the PCM memory using the WDS or equivalent. • Start the engine. • Is the same DTC present?	Yes	Replace the PCM, then go to the next step. (See 01–40B–6 PCM REMOVAL/INSTALLATION [L3 WITH TC].)
		No	Go to the next step.
4	**VERIFY AFTER REPAIR PROCEDURE** • Perform the "AFTER REPAIR PROCEDURE". (See 01–02B–8 AFTER REPAIR PROCEDURE [L3 WITH TC].) • Are any DTCs present?	Yes	Go to the applicable DTC inspection. (See 01–02B–14 DTC TABLE [L3 WITH TC].)
		No	DTC troubleshooting completed.

DTC P2108 [L3 WITH TC]

E6U010202100W34

DTC P2108	Throttle actuator control module performance problem
DETECTION CONDITION	• If the PCM detects either of the following conditions, the PCM determines that throttle actuator control system has a malfunction. — TP sensor power supply voltage **below 4.4 V** — TP sensor No.1 output voltage **below 0.20 V or above 4.85 V** (DTC P0122 or P0123) — TP sensor No.2 output voltage **below 0.20 V or above 4.85 V** (DTC P0222 or P0223) — PCM internal circuit for TP sensor No.1 input circuit malfunction. **Diagnostic support note** • This is a continuous monitor (CCM). • MIL illuminates if the PCM detects the above malfunction condition during the first drive cycle. • FREEZE FRAME DATA is available. • DTCs are stored in PCM memory.
POSSIBLE CAUSE	• TP sensor No.1 malfunction • TP sensor No.2 malfunction • Connector or terminal malfunction • Open circuit between throttle body terminal A and PCM terminal 3M • Short to ground between throttle body terminal A and PCM terminal 3M • Open circuit between throttle body terminal B and PCM terminal 3P • Open circuit between throttle body terminal D and PCM terminal 3Q • Short to the constant voltage supply between throttle body terminal A and PCM terminal 3M • Short to the constant voltage supply between throttle body terminal C and PCM terminal 3J • PCM malfunction

Diagnostic procedure

STEP	INSPECTION		ACTION
1	**VERIFY FREEZE FRAME DATA HAS BEEN RECORDED** • Has the FREEZE FRAME DATA been recorded?	Yes	Go to the next step.
		No	Record FREEZE FRAME DATA on the repair order, then go to the next step.
2	**VERIFY RELATED REPAIR INFORMATION AVAILABILITY** • Check for related Service Bulletins and/or on-line repair information availability. • Is any related repair information available?	Yes	Perform the repair or diagnosis according to the available repair information. • If the vehicle is not repaired, go to the next step.
		No	Go to the next step.
3	**VERIFY RELATED PENDING CODE AND STORED DTCS** • Turn ignition switch to OFF, then ON (Engine off). • Verify pending and/or stored DTCs using the WDS or equivalent. • Is the DTC P0122, P0123, P0222 or P0223 also present?	Yes	Go to appropriate DTC troubleshooting procedure, then go to Step 7.
		No	Go to the next step.
4	**VERIFY INTERMITTENT MALFUNCTION AT TP SENSOR NO.1 CIRCUIT** • Perform the INTERMITTENT TROUBLESHOOTING procedure to TP sensor No.1 related harnesses and connectors. (See 01–03B–6 INTERMITTENT CONCERN TROUBLESHOOTING [L3 WITH TC].) • Is there any malfunction?	Yes	Repair or replace malfunctioning part, according to inspection result, the go to Step 7.
		No	Go to the next step.
5	**VERIFY INTERMITTENT MALFUNCTION AT TP SENSOR NO.2 CIRCUIT** • Perform the INTERMITTENT TROUBLESHOOTING procedure to TP sensor No.2 related harnesses and connectors. (See 01–03B–6 INTERMITTENT CONCERN TROUBLESHOOTING [L3 WITH TC].) • Is there any malfunction	Yes	Repair or replace malfunctioning part, according to inspection result, the go to Step 7.
		No	Go to the next step.
6	**INSPECT TP SENSOR** • Inspect the TP sensor. • Is the TP sensor normal?	Yes	Go to the next step.
		No	Replace the throttle body, then go to nest step.
7	**VERIFY TROUBLESHOOTING OF DTC P2108 COMPLETED** • Make sure to reconnect all disconnected connectors. • Clear the DTC from the PCM memory using the WDS or equivalent. • Turn ignition switch to the ON position (Engine off). • Is the PENDING CODE for this DTC present?	Yes	Replace the PCM, then go to the next step. (See 01–40B–6 PCM REMOVAL/INSTALLATION [L3 WITH TC].)
		No	Go to the next step.
8	**VERIFY AFTER REPAIR PROCEDURE** • Perform the "After Repair Procedure". (See 01–02B–8 AFTER REPAIR PROCEDURE [L3 WITH TC].) • Are any DTCs present?	Yes	Go to the applicable DTC inspection. (See 01–02B–14 DTC TABLE [L3 WITH TC].)
		No	Troubleshooting completed.

DTC P2119 [L3 WITH TC]

E6U010202100W35

DTC P2119	Throttle actuator control throttle body range/performance problem
DETECTION CONDITION	• The PCM compares the TP with the default TP when the ignition switch is off. If the TP is higher than the default TP, the PCM determines that there is a throttle actuator control throttle body range/performance problem. **Diagnostic support note** • This is a continuous monitor (CCM). • The MIL illuminates if the PCM detects the above malfunctioning condition in the first drive cycles. • FREEZE FRAME DATA is available. • DTCs are stored in the PCM memory.
POSSIBLE CAUSE	• Throttle actuator malfunction • Throttle valve malfunction • PCM malfunction

Diagnostic procedure

STEP	INSPECTION		ACTION
1	**VERIFY FREEZE FRAME DATA HAS BEEN RECORDED** • Has the FREEZE FRAME DATA been recorded?	Yes	Go to the next step.
		No	Record the FREEZE FRAME DATA on the repair order, then go to the next step.
2	**VERIFY RELATED REPAIR INFORMATION AVAILABILITY** • Verify related Service Bulletins and/or on-line repair information availability. • Is any related repair information available?	Yes	Perform the repair or diagnosis according to the available repair information. • If the vehicle is not repaired, go to the next step.
		No	Go to the next step.
3	**INSPECT THROTTLE ACTUATOR** • Inspect the throttle actuator. (See 01–13B–12 Resistance Inspection.) • Is there any malfunction?	Yes	Replace the throttle body, then go to Step 5. (See 01–13B–4 INTAKE AIR SYSTEM REMOVAL/INSTALLATION [L3 WITH TC], 01–13B–4 INTAKE AIR SYSTEM REMOVAL/INSTALLATION [L3 WITH TC].)
		No	Go to the next step.
4	**INSPECT TP SENSOR** • Inspect the TP sensor. (See 01–40B–27 THROTTLE POSITION (TP) SENSOR INSPECTION [L3 WITH TC].) • Is there any malfunction?	Yes	Replace the TP sensor, then go to the next step. (See 01–13B–4 INTAKE AIR SYSTEM REMOVAL/INSTALLATION [L3 WITH TC], 01–13B–4 INTAKE AIR SYSTEM REMOVAL/INSTALLATION [L3 WITH TC].)
		No	Go to the next step.
5	**VERIFY TROUBLESHOOTING OF DTC P2119 COMPLETED** • Make sure to reconnect all disconnected connectors. • Clear the DTC from the PCM memory using the WDS or equivalent. • Turn the ignition switch to the ON position (Engine off), then off. • Is the PENDING CODE for this DTC present?	Yes	Replace the PCM, then go to the next step. (See 01–40B–6 PCM REMOVAL/INSTALLATION [L3 WITH TC].)
		No	Go to the next step.
6	**VERIFY AFTER REPAIR PROCEDURE** • Perform the "AFTER REPAIR PROCEDURE". (See 01–02B–8 AFTER REPAIR PROCEDURE [L3 WITH TC].) • Are any DTCs present?	Yes	Go to the applicable DTC inspection. (See 01–02B–14 DTC TABLE [L3 WITH TC].)
		No	DTC troubleshooting completed.

DTC P2122 [L3 WITH TC]

E6U010202100W36

DTC P2122	Accelerator pedal position (APP) sensor No.1 circuit low input
DETECTION CONDITION	• The PCM monitors the APS No.1 signal. If the PCM detects that the APP sensor No.1 voltage is **below 0.2 V**, the PCM determines that the APP sensor No.1 circuit has a malfunction. **Diagnostic support note** • This is a continuous monitor (CCM). • MIL illuminates if the PCM detects the above malfunction condition during the first drive cycle. • FREEZE FRAME DATA is available. • DTCs are stored in the PCM memory.
POSSIBLE CAUSE	• APP sensor malfunction • Connector or terminal malfunction • Open circuit between APP sensor terminal F and PCM terminal 3D • Short to ground circuit between APP sensor terminal F and PCM terminal 3D • Open circuit between APP sensor terminal D and PCM terminal 3G

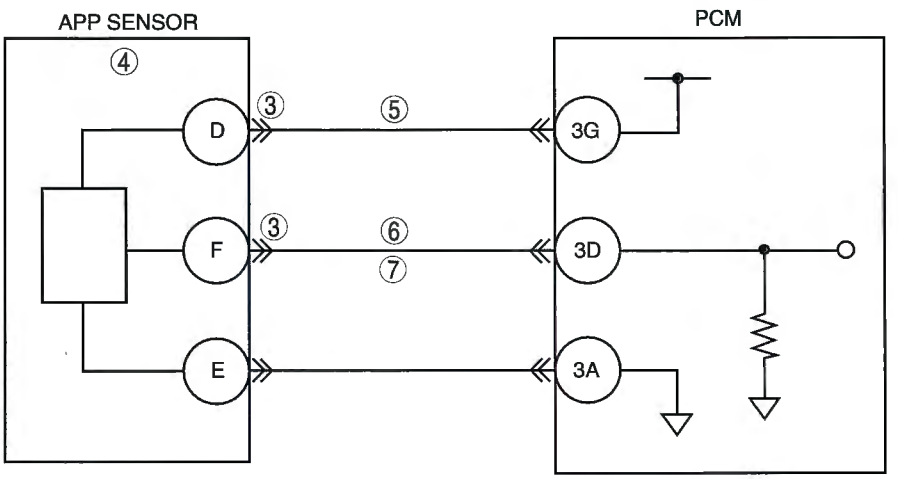

APP SENSOR
WIRING HARNESS SIDE CONNECTOR

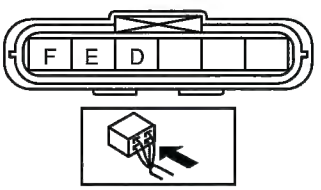

PCM
WIRING HARNESS SIDE CONNECTOR

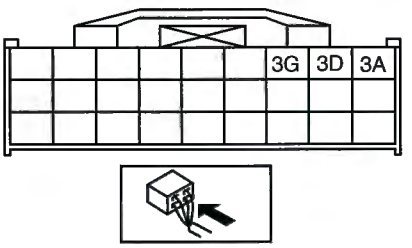

Diagnostic procedure

STEP	INSPECTION		ACTION
1	**VERIFY FREEZE FRAME DATA HAS BEEN RECORDED** • Has the FREEZE FRAME DATA been recorded?	Yes	Go to the next step.
		No	Record FREEZE FRAME DATA on the repair order, then go to the next step.
2	**VERIFY RELATED REPAIR INFORMATION AVAILABILITY** • Check for related Service Bulletins and/or on-line repair information availability. • Is any related repair information available?	Yes	Perform the repair or diagnosis according to the available repair information. • If the vehicle is not repaired, go to the next step.
		No	Go to the next step.
3	**CLASSIFY APP SENSOR OR HARNESS MALFUNCTION** • Connect the WDS or equivalent. • Access the APP1 PID. • Disconnect the throttle body connector. • Connect a jumper wire between APP sensor terminals D and F (harness-side). • Is the PID **approx. 100%**?	Yes	Go to the next step.
		No	Go to step 5.
4	**INSPECT APP SENSOR** • Perform the APP sensor inspection. (See 01–40B–26 ACCELERATOR PEDAL POSITION (APP) SENSOR INSPECTION [L3 WITH TC].) • Is the APP sensor normal?	Yes	Inspect for poor APP sensor connector terminal D connection. Repair or replace if necessary, then go to Step 8.
		No	Replace the APP sensor, then go to Step 8.
5	**INSPECT POWER SUPPLY CIRCUIT VOLTAGE AT APP SENSOR CONNECTOR** • Turn ignition switch to the ON position (Engine off). • Measure the voltage at APP sensor terminal D (harness-side). • Is the voltage **within 4.5—5.5 V**?	Yes	Go to the next step.
		No	Repair or replace open circuit between APP sensor connector terminal D and PCM connector terminal 3G (harness-side). Then, then go to Step 8.
6	**VERIFY APP1 SIGNAL CIRCUIT FOR OPEN CIRCUIT** • Turn the ignition switch to off. • Inspect continuity between APP sensor terminal F (harness-side) and PCM terminal 3D (harness-side). • Is there continuity?	Yes	Go to the next step.
		No	Repair or replace the suspected wiring harness, then go to Step 8.
7	**VERIFY APP1 SIGNAL CIRCUIT FOR SHORT TO GROUND** • Inspect for continuity between APP sensor terminal F (harness-side) and body ground. • Is there continuity?	Yes	Repair or replace the suspected wiring harness, then go to the next step.
		No	Go to the next step.
8	**VERIFY TROUBLESHOOTING OF DTC P2122 COMPLETED** • Make sure to reconnect all disconnected connectors. • Turn ignition switch to the ON position (Engine off). • Clear the DTC from the PCM memory using the WDS or equivalent. • Start the engine and warm it up completely. • Is the same DTC present?	Yes	Replace the PCM, then go to the next step. (See 01–40B–6 PCM REMOVAL/INSTALLATION [L3 WITH TC].)
		No	Go to the next step.
9	**VERIFY AFTER REPAIR PROCEDURE** • Perform the "After Repair Procedure". (See 01–02B–8 AFTER REPAIR PROCEDURE [L3 WITH TC].) • Are any DTCs present?	Yes	Go to the applicable DTC inspection. (See 01–02B–14 DTC TABLE [L3 WITH TC].)
		No	Troubleshooting completed.

DTC P2123 [L3 WITH TC]

E6U010202100W37

DTC P2123	Accelerator pedal position (APP) sensor No.1 circuit high input
DETECTION CONDITION	• The PCM monitors the APP sensor No.1 signal. If the PCM detects that the APP sensor No.1 voltage is **above 4.5 V**, the PCM determines that the APP sensor No.1 circuit has a malfunction. **Diagnostic support note** • This is a continuous monitor (CCM). • MIL illuminates if the PCM detects the above malfunction condition during the first drive cycle. • FREEZE FRAME DATA is available. • DTCs are stored in the PCM memory.
POSSIBLE CAUSE	• APP sensor malfunction • Connector or terminal malfunction • Open circuit between APP sensor terminal E and PCM terminal 3A • Open circuit between APP sensor terminal F and PCM terminal 3D • Short to constant voltage in the supply circuit between APP sensor terminal F and PCM terminal 3D

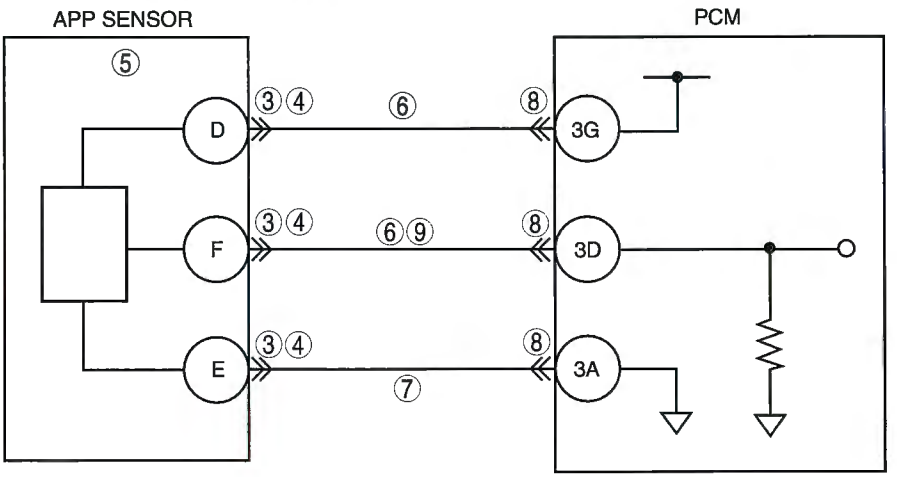

APP SENSOR
WIRING HARNESS SIDE CONNECTOR

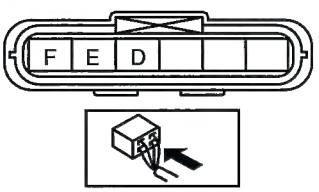

PCM
WIRING HARNESS SIDE CONNECTOR

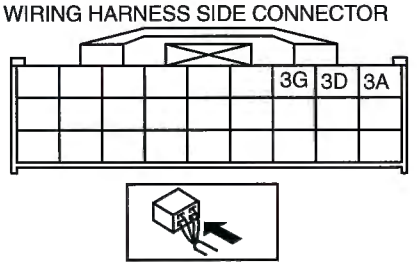

Diagnostic procedure

STEP	INSPECTION		ACTION
1	**VERIFY FREEZE FRAME DATA HAS BEEN RECORDED** • Has the FREEZE FRAME DATA been recorded?	Yes	Go to the next step.
		No	Record FREEZE FRAME DATA on the repair order, then go to the next step.
2	**VERIFY RELATED REPAIR INFORMATION AVAILABILITY** • Check for related Service Bulletins and/or on-line repair information availability. • Is any related repair information available?	Yes	Perform the repair or diagnosis according to the available repair information. • If the vehicle is not repaired, go to the next step.
		No	Go to the next step.
3	**INSPECT APP SENSOR CONNECTOR** • Turn the ignition switch to off. • Verify that the APP sensor connector is connected securely. • Is the connector normal?	Yes	Go to the next step.
		No	Connect the connector securely, then go to Step 10.
4	**INSPECT APP SENSOR CONNECTOR FOR POOR CONNECTION** • Disconnect the APP sensor connector. • Inspect for poor connection (such as damaged/ pulled-out pins, corrosion). • Is there any malfunction?	Yes	Repair or replace the suspected terminal, then go to Step 10.
		No	Go to the next step.
5	**INSPECT APP SENSOR** • Perform the APP sensor inspection. (See 01–40B–26 ACCELERATOR PEDAL POSITION (APP) SENSOR INSPECTION [L3 WITH TC].) • Is the APP sensor normal?	Yes	Go to the next step.
		No	Replace the APP sensor, then go to Step 10.
6	**INSPECT APP1 SIGNAL CIRCUIT FOR SHORT TO POWER SUPPLY** • Turn ignition switch to the ON position (Engine off). • Measure the voltage between APP sensor terminal F (harness-side) and body ground. • Is the voltage **above 4.8 V**?	Yes	Repair or replace a short to power supply. Then, go to Step 10.
		No	Go to the next step.
7	**VERIFY APP SENSOR GROUND CIRCUIT FOR OPEN CIRCUIT** • Disconnect the PCM connector. • Inspect for continuity between APP sensor terminal E (harness side) and PCM terminal 3A (harness side). • Is there continuity?	Yes	Repair or replace for an open circuit between APP sensor terminal F (harness-side) and PCM connector terminal 3D (harness-side). Then, go to Step 10.
		No	Go to the next step.
8	**INSPECT PCM CONNECTOR FOR POOR CONNECTION** • Inspect for poor connection (such as damaged/ pulled-out pins, corrosion). • Is there any malfunction?	Yes	Repair the terminal, then go to Step 10.
		No	Go to the next step.
9	**VERIFY TP SIGNAL CIRCUIT FOR SHORT TO CONSTANT VOLTAGE CIRCUIT** • Inspect for continuity between throttle body terminals D and F (harness side). • Is there continuity?	Yes	Repair or replace the suspected wiring harness, then go to the next step.
		No	Go to the next step.
10	**VERIFY TROUBLESHOOTING OF DTC P2123 COMPLETED** • Make sure to reconnect all disconnected connectors. • Turn ignition switch to the ON position (Engine off). • Clear the DTC from the PCM memory using the WDS or equivalent. • Start the engine and warm it up completely. • Is the same DTC present?	Yes	Replace the PCM, then go to the next step. (See 01–40B–6 PCM REMOVAL/INSTALLATION [L3 WITH TC].)
		No	Go to the next step.
11	**VERIFY AFTER REPAIR PROCEDURE** • Perform the "After Repair Procedure". (See 01–02B–8 AFTER REPAIR PROCEDURE [L3 WITH TC].) • Are any DTCs present?	Yes	Go to the applicable DTC inspection. (See 01–02B–14 DTC TABLE [L3 WITH TC].)
		No	Troubleshooting completed.

DTC P2127 [L3 WITH TC]

E6U010202100W38

DTC P2127	Accelerator pedal position (APP) sensor No.2 circuit low input
DETECTION CONDITION	• The PCM monitors the APP sensor No.2 signal. If the PCM detects that the APP sensor No.2 voltage is **below 0.2 V**, the PCM determines that the APP sensor No.2 circuit has a malfunction. **Diagnostic support note** • This is a continuous monitor (CCM). • MIL illuminates if the PCM detects the above malfunction condition during the first drive cycle. • FREEZE FRAME DATA is available. • DTCs are stored in the PCM memory.
POSSIBLE CAUSE	• APP sensor malfunction • Connector or terminal malfunction • Open circuit between APP sensor terminal C and PCM terminal 2A • Short to ground circuit between APP sensor terminal C and PCM terminal 2A • Open circuit between APP sensor terminal A and PCM terminal 2K

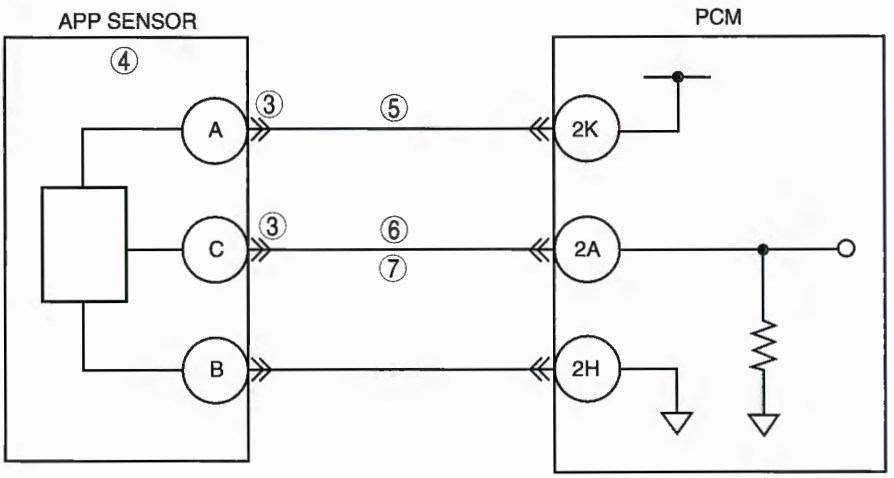

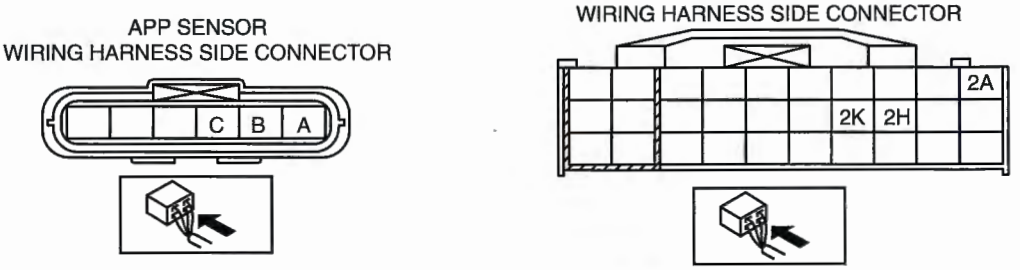

Diagnostic procedure

STEP	INSPECTION		ACTION
1	**VERIFY FREEZE FRAME DATA HAS BEEN RECORDED** • Has the FREEZE FRAME DATA been recorded?	Yes	Go to the next step.
		No	Record FREEZE FRAME DATA on the repair order, then g to the next step.
2	**VERIFY RELATED REPAIR INFORMATION AVAILABILITY** • Check for related Service Bulletins and/or on-line repair information availability. • Is any related repair information available?	Yes	Perform the repair or diagnosis according to the available repair information. • If the vehicle is not repaired, go to the next step.
		No	Go to the next step.
3	**CLASSIFY APP SENSOR OR HARNESS MALFUNCTION** • Connect the WDS or equivalent. • Access the APP2 PID. • Disconnect the throttle body connector. • Connect a jumper wire between APP sensor terminals A and C (harness-side). • Is the PID **approx. 100%**?	Yes	Go to the next step.
		No	Go to step 5.
4	**INSPECT APP SENSOR** • Perform the APP sensor inspection. (See 01–40B–26 ACCELERATOR PEDAL POSITION (APP) SENSOR INSPECTION [L3 WITH TC].) • Is the APP sensor normal?	Yes	Inspect for poor APP sensor connector terminal A connection. Repair or replace if necessary, then go to Step 8.
		No	Replace the APP sensor, then go to Step 8.
5	**INSPECT POWER SUPPLY CIRCUIT VOLTAGE AT APP SENSOR CONNECTOR** • Turn ignition switch to the ON position (Engine off). • Measure the voltage at APP sensor terminal A (harness-side). • Is the voltage **within 4.5—5.5 V**?	Yes	Go to the next step.
		No	Repair or replace for an open circuit between APP sensor connector terminal A and PCM connector terminal 2K (harness-side). Then, then go to Step 8.
6	**VERIFY APP2 SIGNAL CIRCUIT FOR OPEN CIRCUIT** • Turn the ignition switch to off. • Inspect for continuity between APP sensor terminal C (harness-side) and PCM terminal 2A (harness-side). • Is there continuity?	Yes	Go to the next step.
		No	Repair or replace the suspected wiring harness, then go t Step 8.
7	**VERIFY APP2 SIGNAL CIRCUIT FOR SHORT TO GROUND** • Inspect for continuity between APP sensor terminal C (harness-side) and body ground. • Is there continuity?	Yes	Repair or replace the suspected wiring harness, then go to the next step.
		No	Go to the next step.
8	**VERIFY TROUBLESHOOTING OF DTC P2127 COMPLETED** • Make sure to reconnect all disconnected connectors. • Turn ignition switch to the ON position (Engine off). • Clear the DTC from the PCM memory using the WDS or equivalent. • Start engine and warm it up completely. • Is the same DTC present?	Yes	Replace the PCM, then go to the next step. (See 01–40B–6 PCM REMOVAL/INSTALLATION [L3 WITH TC].)
		No	Go to the next step.
9	**VERIFY AFTER REPAIR PROCEDURE** • Perform the "After Repair Procedure". (See 01–02B–8 AFTER REPAIR PROCEDURE [L3 WITH TC].) • Are any DTCs present?	Yes	Go to the applicable DTC inspection. (See 01–02B–14 DTC TABLE [L3 WITH TC].)
		No	Troubleshooting completed.

DTC P2128 [L3 WITH TC]

E6U010202100W39

DTC P2128	Accelerator pedal position (APP) sensor No.2 circuit high input
DETECTION CONDITION	• The PCM monitors the APP sensor No.2 signal. If the PCM detects that the APP sensor No.2 voltage is **above 4.5 V**, the PCM determines that the APP sensor No.2 circuit has a malfunction. **Diagnostic support note** • This is a continuous monitor (CCM). • MIL illuminates if the PCM detects the above malfunction condition during the first drive cycle. • FREEZE FRAME DATA is available. • DTCs are stored in the PCM memory.
POSSIBLE CAUSE	• TP sensor malfunction • Connector or terminal malfunction • Open circuit between APP sensor terminal B and PCM terminal 2H • Open circuit between APP sensor terminal C and PCM terminal 2A • Short to constant voltage in the supply circuit between APP sensor terminal C and PCM terminal 2A

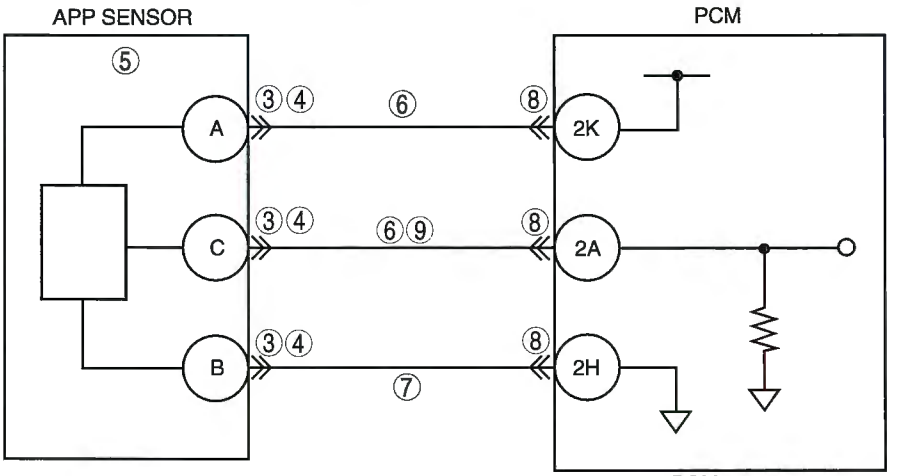

APP SENSOR
WIRING HARNESS SIDE CONNECTOR

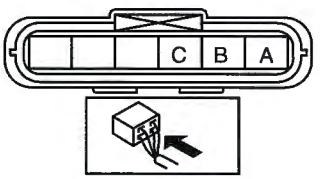

PCM
WIRING HARNESS SIDE CONNECTOR

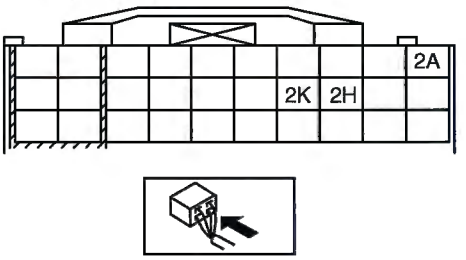

Diagnostic procedure

STEP	INSPECTION		ACTION
1	**VERIFY FREEZE FRAME DATA HAS BEEN RECORDED** • Has the FREEZE FRAME DATA been recorded?	Yes	Go to the next step.
		No	Record FREEZE FRAME DATA on the repair order, then go to the next step.
2	**VERIFY RELATED REPAIR INFORMATION AVAILABILITY** • Check for related Service Bulletins and/or on-line repair information availability. • Is any related repair information available?	Yes	Perform the repair or diagnosis according to the available repair information. • If the vehicle is not repaired, go to the next step.
		No	Go to the next step.
3	**INSPECT APP SENSOR CONNECTOR** • Turn the ignition switch to off. • Verify that the APP sensor connector is connected securely. • Is the connector normal?	Yes	Go to the next step.
		No	Connect the connector securely, then go to Step 10.
4	**INSPECT APP SENSOR CONNECTOR FOR POOR CONNECTION** • Disconnect the APP sensor connector. • Inspect for poor connection (such as damaged/pulled-out pins, corrosion). • Is there any malfunction?	Yes	Repair or replace the suspected terminal, then go to Step 10.
		No	Go to the next step.
5	**INSPECT APP SENSOR** • Perform the APP sensor inspection. (See 01–40B–26 ACCELERATOR PEDAL POSITION (APP) SENSOR INSPECTION [L3 WITH TC].) • Is the APP sensor normal?	Yes	Go to the next step.
		No	Replace the APP sensor, then go to Step 10.
6	**INSPECT APP2 SIGNAL CIRCUIT FOR SHORT TO POWER SUPPLY** • Turn ignition switch to the ON position (Engine off). • Measure the voltage between APP sensor terminal C (harness-side) and body ground. • Is the voltage **above 4.5 V**?	Yes	Repair or replace for a short to power supply. Then, go to Step 10.
		No	Go to the next step.
7	**VERIFY APP SENSOR GROUND CIRCUIT FOR OPEN CIRCUIT** • Disconnect the PCM connector. • Inspect the continuity between APP sensor terminal B (harness-side) and PCM terminal 2H (harness-side). • Is there continuity?	Yes	Repair or replace for an open circuit between APP sensor terminal C (harness-side) and PCM connector terminal 2A (harness-side). Then, go to Step 10.
		No	Go to the next step.
8	**INSPECT PCM CONNECTOR FOR POOR CONNECTION** • Inspect for poor connection (such as damaged/pulled-out pins, corrosion). • Is there any malfunction?	Yes	Repair the terminal, then go to Step 10.
		No	Go to the next step.
9	**VERIFY APP SIGNAL CIRCUIT FOR SHORT TO CONSTANT VOLTAGE CIRCUIT** • Inspect the continuity between throttle body terminals A and C (harness-side). • Is there continuity?	Yes	Repair or replace the suspected wiring harness, then go to the next step.
		No	Go to the next step.
10	**VERIFY TROUBLESHOOTING OF DTC P2128 COMPLETED** • Make sure to reconnect all disconnected connectors. • Turn ignition switch to the ON position (Engine off). • Clear the DTC from the PCM memory using the WDS or equivalent. • Start the engine and warm it up completely. • Is the same DTC present?	Yes	Replace the PCM, then go to the next step. (See 01–40B–6 PCM REMOVAL/INSTALLATION [L3 WITH TC].)
		No	Go to the next step.
11	**VERIFY AFTER REPAIR PROCEDURE** • Perform the "After Repair Procedure". (See 01–02B–8 AFTER REPAIR PROCEDURE [L3 WITH TC].) • Are any DTCs present?	Yes	Go to the applicable DTC inspection. (See 01–02B–14 DTC TABLE [L3 WITH TC].)
		No	Troubleshooting completed.

DTC P2135 [L3 WITH TC]

E6U010202100W40

DTC P2135	TP sensor No.1/No.2 voltage correlation problem
DETECTION CONDITION	• The PCM compares the input voltage from TP sensor No.1 with the input voltage from TP sensor No.2 when the engine is running. If the difference is more than the specification, the PCM determines that there is a TP sensor No.1/No.2 voltage correlation problem. **Diagnostic support note** • This is a continuous monitor (CCM). • The MIL illuminates if the PCM detects the above malfunction condition in the first drive cycle. • FREEZE FRAME DATA is available. • DTCs are stored in the PCM memory.
POSSIBLE CAUSE	• TP sensor No.1 malfunction • TP sensor No.2 malfunction • Connector or terminal malfunction • PCM malfunction

Diagnostic procedure

STEP	INSPECTION		ACTION
1	**VERIFY FREEZE FRAME DATA HAS BEEN RECORDED** • Has the FREEZE FRAME DATA been recorded?	Yes	Go to the next step.
		No	Record the FREEZE FRAME DATA on the repair order, then go to the next step.
2	**VERIFY RELATED REPAIR INFORMATION AVAILABILITY** • Verify related Service Bulletins and/or on-line repair information availability. • Is any related repair information available?	Yes	Perform the repair or diagnosis according to the available repair information. • If the vehicle is not repaired, go to the next step.
		No	Go to the next step.
3	**INSPECT THROTTLE BODY CONNECTOR FOR POOR CONNECTION** • Turn the ignition switch to off. • Disconnect the throttle body connector. • Inspect for poor connection (such as damaged/ pulled-out pins, corrosion). • Is there any malfunction?	Yes	Repair or replace the terminal, then go to Step 6.
		No	Go to the next step.
4	**INSPECT TP SENSOR** • Inspect the TP sensor. (See 01–40B–27 THROTTLE POSITION (TP) SENSOR INSPECTION [L3 WITH TC].) • Is there any malfunction?	Yes	Replace the throttle body, then go to Step 6. (See 01–13B–4 INTAKE AIR SYSTEM REMOVAL/ INSTALLATION [L3 WITH TC], 01–13B–4 INTAKE AIR SYSTEM REMOVAL/INSTALLATION [L3 WITH TC].)
		No	Go to the next step.
5	**INSPECT PCM CONNECTOR FOR POOR CONNECTION** • Turn the ignition switch to off. • Disconnect the PCM connector. • Inspect for poor connection (such as damaged/ pulled-out pins, corrosion). • Is there any malfunction?	Yes	Repair or replace the terminal, then go to the next step.
		No	Go to the next step.
6	**VERIFY TROUBLESHOOTING OF DTC P2135 COMPLETED** • Make sure to reconnect all disconnected connectors. • Clear the DTC from the PCM memory using the WDS or equivalent. • Start the engine. • Is the same DTC present?	Yes	Replace the PCM, then go to the next step. (See 01–40B–6 PCM REMOVAL/INSTALLATION [L3 WITH TC].)
		No	Go to the next step.
7	**VERIFY AFTER REPAIR PROCEDURE** • Perform the "AFTER REPAIR PROCEDURE". (See 01–02B–8 AFTER REPAIR PROCEDURE [L3 WITH TC].) • Are any DTCs present?	Yes	Go to the applicable DTC inspection. (See 01–02B–14 DTC TABLE [L3 WITH TC].)
		No	DTC troubleshooting completed.

DTC P2138 [L3 WITH TC]

E6U010202100W41

DTC P2138	APP sensor No.1/No.2 voltage correlation problem
DETECTION CONDITION	• The PCM compares the input voltage from APP sensor No.1 with the input voltage from APP sensor No.2 when the engine is running. If the difference is more than the specification, the PCM determines that ther is an APP sensor No.1/No.2 angle correlation problem. **Diagnostic support note** • This is a continuous monitor (CCM). • The MIL illuminates if the PCM detects the above malfunction condition in the first drive cycle. • FREEZE FRAME DATA is available. • DTCs are stored in the PCM memory.
POSSIBLE CAUSE	• APP sensor No.1 malfunction • APP sensor No.2 malfunction • Connector or terminal malfunction • PCM malfunction

Diagnostic procedure

STEP	INSPECTION		ACTION
1	**VERIFY FREEZE FRAME DATA HAS BEEN RECORDED** • Has the FREEZE FRAME DATA been recorded?	Yes	Go to the next step.
		No	Record the FREEZE FRAME DATA on the repair order, then go to the next step.
2	**VERIFY RELATED REPAIR INFORMATION AVAILABILITY** • Verify related Service Bulletins and/or on-line repair information availability. • Is any related repair information available?	Yes	Perform the repair or diagnosis according to the available repair information. • If the vehicle is not repaired, go to the next step.
		No	Go to the next step.
3	**INSPECT APP SENSOR CONNECTOR FOR POOR CONNECTION** • Turn the ignition switch to off. • Disconnect the APP sensor connector. • Inspect for poor connection (such as damaged/ pulled-out pins, corrosion). • Is there any malfunction?	Yes	Repair or replace the terminal, then go to Step 6.
		No	Go to the next step.
4	**INSPECT APP SENSOR** • Inspect the APP sensor. (See 01–40B–26 ACCELERATOR PEDAL POSITION (APP) SENSOR INSPECTION [L3 WITH TC].) • Is there any malfunction?	Yes	Replace the APP sensor, then go to Step 6. (See 01–13B–15 ACCELERATOR PEDAL REMOVAL/ INSTALLATION [L3 WITH TC].)
		No	Go to the next step.
5	**INSPECT PCM CONNECTOR FOR POOR CONNECTION** • Turn the ignition switch to off. • Disconnect the PCM connector. • Inspect for poor connection (such as damaged/ pulled-out pins, corrosion). • Is there any malfunction?	Yes	Repair or replace the terminal, then go to the next step.
		No	Go to the next step.
6	**VERIFY TROUBLESHOOTING OF DTC P2138 COMPLETED** • Make sure to reconnect all disconnected connectors. • Clear the DTC from the PCM memory using the WDS or equivalent. • Start the engine. • Is the same DTC present?	Yes	Replace the PCM, then go to the next step. (See 01–40B–6 PCM REMOVAL/INSTALLATION [L3 WITH TC].)
		No	Go to the next step.
7	**VERIFY AFTER REPAIR PROCEDURE** • Perform the "AFTER REPAIR PROCEDURE". (See 01–02B–8 AFTER REPAIR PROCEDURE [L3 WITH TC].) • Are any DTCs present?	Yes	Go to the applicable DTC inspection. (See 01–02B–14 DTC TABLE [L3 WITH TC].)
		No	DTC troubleshooting completed.

DTC P2177 [L3 WITH TC]

E6U010202100W42

DTC P2177	Fuel system too lean at off idle
DETECTION CONDITION	• PCM monitors the short term fuel trim (SHRTFT) and long term fuel trim (LONGFT) during closed loop fuel control at off-idle. If the LONGFT and the sum total of these fuel trims exceed the preprogrammed criteria, the PCM determines that the fuel system is too lean at off-idle. **Diagnostic support note** • This is a continuous monitor. (Fuel system) • MIL illuminates if the PCM detects the above malfunctioning condition in two consecutive drive cycles or in one drive cycle while the DTC for the same malfunction has been stored in the PCM. • PENDING CODE is available if the PCM detects the above malfunction conditions during the first drive cycle. • FREEZE FRAME DATA is available. • DTCs are stored in the PCM memory.
POSSIBLE CAUSE	• Misfire • Front HO2S deterioration • Front HO2S heater malfunction • MAF sensor malfunction • Pressure regulator malfunction • Fuel pressure sensor malfunction • Relief valve (built-in fuel delivery pipe) malfunction • Spill valve control solenoid valve (built-in high pressure fuel pump) malfunction • High pressure fuel pump malfunction • Fuel pump malfunction • Fuel filter clogged or restricted • Fuel leakage on fuel line • Exhaust system leakage • Purge solenoid valve improper operation • Purge solenoid valve malfunction (stuck open) • Purge solenoid hoses improper connection • Air suction in intake-air system • Insufficient engine compression • Variable valve timing control system improper operation • PCM malfunction

01–02B

Diagnostic procedure

STEP	INSPECTION		ACTION
1	**VERIFY FREEZE FRAME DATA AND DIAGNOSTIC MONITORING TEST RESULTS HAVE BEEN RECORDED** • Have the FREEZE FRAME DATA and DIAGNOSTIC MONITORING TEST RESULTS (Fuel system related) been recorded?	Yes	Go to the next step.
		No	Record the FREEZE FRAME DATA and DIAGNOSTIC MONITORING TEST RESULTS on the repair order, then go to the next step.
2	**VERIFY RELATED REPAIR INFORMATION AVAILABILITY** • Verify related Service Bulletins and/or on-line repair information availability. • Is any related repair information available?	Yes	Perform the repair or diagnosis according to the available repair information. • If the vehicle is not repaired, go to the next step.
		No	Go to the next step.
3	**VERIFY RELATED PENDING CODE OR STORED DTCS** • Turn the ignition switch to off, then to the ON position (Engine off). • Verify related pending code or stored DTCs. • Are other DTCs present?	Yes	If misfire the DTC is present, go to Step 8. If other DTCs is present, go to the applicable DTC inspection. (See 01–02B–14 DTC TABLE [L3 WITH TC].)
		No	If driveability concern is present, go to Step 8. If not, go to the next step.
4	**IDENTIFY TRIGGER DTC FOR FREEZE FRAME DATA** • Is DTC P2177 on FREEZE FRAME DATA?	Yes	Go to the next step.
		No	Go to troubleshooting procedures for DTC on FREEZE FRAME DATA.
5	**VERIFY CURRENT INPUT SIGNAL STATUS (IGNITION SWITCH TO THE ON POSITION/ IDLE)** • Access the APP1, APP2, ECT, MAF, TP and VSS PIDs using the WDS or equivalent. • Is there any signal that is far out of specification when the ignition switch is at the ON position and the engine runs?	Yes	Inspect the sensor and excessive resistance in related wiring harnesses. Repair if necessary. Then go to Step 20.
		No	Go to the next step.

STEP	INSPECTION		ACTION
6	**VERIFY CURRENT INPUT SIGNAL STATUS UNDER TROUBLE CONDITION** • Inspect the same PIDs as Step 5 while simulating FREEZE FRAME DATA condition. • Is there any signal which causes drastic changes?	Yes	Inspect the sensor and related wiring harnesses repair or replace it. Then go to Step 20.
		No	Go to the next step.
7	**VERIFY CURRENT INPUT SIGNAL STATUS OF FRONT HO2S** • Access the O2S11 for P2177 PID using the WDS or equivalent. • Check the PID under following accelerator pedal condition in NEUTRAL. • Is the PID reading normal? — **–0.1—0.1 A** when idle — **More than 0.25 mA** just after release of accelerator pedal (lean condition).	Yes	Go to the next step.
		No	Visually inspect for any gas leakage between the exhaust manifold and the front HO2S. Then go to Step 20.
8	**VERIFY CURRENT INPUT SIGNAL STATUS OF MAF SENSOR** • Connect the WDS or equivalent to the DLC-2. • Start the engine. • Access the MAF PID. • Verify that the MAF PID changes quickly according to engine speed. • Is the PID normal?	Yes	Go to the next step.
		No	Replace the MAF/IAT sensor, then go to Step 20.
9	**INSPECT FOR EXCESSIVE AIR SUCTION OF INTAKE AIR SYSTEM** • Visually inspect for loosen, cracks or damages hoses on intake-air system. • Is there any malfunction?	Yes	Repair or replace the source of air suction, then go to Step 20.
		No	Go to the next step.
10	**INSPECT PURGE SOLENOID OPERATION** • Perform the Purge Control System Inspection. (See 01–03B–91 Purge Control System Inspection.) • Does the purge control system work properly?	Yes	Go to the next step.
		No	Repair or replace the malfunctioning part according to inspection result, then go to Step 20.
11	**INSPECT FUEL PRESSURE (HIGH-SIDE)** • Access and monitor FUEL_PRES PID. • Is the FUEL_PRES PID value within the specified? (See 01–40B–6 Using the WDS or Equivalent.)	Yes	Go to Step 15.
		No	Go to the next step.
12	**IDENTIFY CAUSE BY FUEL PRESSURE SENSOR OR HIGH PRESSURE FUEL PUMP** • Is the vehicle accelerate performance normally?	Yes	Go to the next step.
		No	Go to Step 14.
13	**INSPECT FUEL PRESSURE SENSOR** • Inspect the fuel pressure sensor. • Is fuel leakage found? (See01–40B–34 FUEL PRESSURE SENSOR INSPECTION [L3 WITH TC].) • Is the fuel pressure sensor normal?	Yes	Go to Step 15.
		No	Replace the fuel delivery pipe, then go to Step 20.
14	**INSPECT HIGH PRESSURE FUEL PUMP** • Replace the high pressure fuel pump • Monitor FUEL_PRES PID • Is the FUEL_PRES PID value within the specified? (See 01–40B–6 Using the WDS or Equivalent.)	Yes	Go to Step 20.
		No	Go to the next step.
15	**INSPECT FUEL PRESSURE (LOW-SIDE)** • Connect the fuel pressure gauge between fuel pump and high pressure fuel pump. • Measure the low side fuel pressure. (See 01–14B–5 FUEL LINE PRESSURE INSPECTION [L3 WITH TC].) • Is the low side fuel pressure within the specified?	Yes	Go to the next step.
		No	Inspect for following: • Fuel line restriction • Fuel filter clogging If okay replace the fuel pump. Then go to Step 20.

STEP	INSPECTION		ACTION
16	**INSPECT IGNITION SYSTEM** • Perform the spark test. (See 01–03B–90 Spark Test.) • Is strong blue spark visible at each cylinder?	Yes	Go to the next step.
		No	Repair or replace the malfunctioning part according to spark test result, then go to Step 20.
17	**INSPECT ENGINE COMPRESSION** • Inspect the engine compression. (See 01–10B–9 COMPRESSION INSPECTION [L3 WITH TC].) • Is it normal?	Yes	Go to the next step.
		No	Implement the engine overhaul for repairs, then go to Step 20.
18	**INSPECT VARIABLE VALVE TIMING CONTROL SYSTEM OPERATION** • Inspect the variable valve timing control system operation. (See 01–03B–93 Variable Valve Timing Control System Operation Inspection.) • Does the variable valve timing control system work properly?	Yes	Go to the next step.
		No	Repair or replace the malfunctioning part according to inspection results, then go to Step 20.
19	**INSPECT FUEL INJECTOR OPERATION** • Remove the fuel injector. • Inspect the fuel injector (resistance, injection amount). (See 01–14B–29 FUEL INJECTOR INSPECTION [L3 WITH TC].) • Is the fuel injector normal?	Yes	Go to the next step.
		No	Replace the fuel injector, then go to the next step.
20	**VERIFY TROUBLESHOOTING OF DTC P2177 COMPLETED** • Make sure to reconnect all disconnected connectors. • Clear the DTC from the PCM memory using the WDS or equivalent. • Perform the PCM Adaptive Memory Produce Drive Mode. (See 01–02B–9 OBD-II DRIVE MODE [L3 WITH TC].) • Is the PENDING CODE for this DTC present?	Yes	Replace the PCM, then go to the next step. (See 01–40B–6 PCM REMOVAL/INSTALLATION [L3 WITH TC].)
		No	Go to the next step.
21	**VERIFY AFTER REPAIR PROCEDURE** • Perform the "AFTER REPAIR PROCEDURE". (See 01–02B–8 AFTER REPAIR PROCEDURE [L3 WITH TC].) • Are any DTCs present?	Yes	Go to the applicable DTC inspection. (See 01–02B–14 DTC TABLE [L3 WITH TC].)
		No	Troubleshooting completed.

DTC P2178 [L3 WITH TC]

E6U010202100W43

DTC P2178	Fuel system too rich at off idle
DETECTION CONDITION	• PCM monitors the short term fuel trim (SHRTFT) and long term fuel trim (LONGFT) during closed loop fue control at off-idle. If the LONGFT and the sum total of these fuel trims exceed the preprogrammed criteria the PCM determines that fuel system is too rich at off-idle. **Diagnostic support note** • This is a continuous monitor. (Fuel system) • MIL illuminates if the PCM detects the above malfunctioning condition in two consecutive drive cycles or in one drive cycle while the DTC for the same malfunction has been stored in the PCM. • PENDING CODE is available if the PCM detects the above malfunction conditions during the first drive cycle. • FREEZE FRAME DATA is available. • DTCs are stored in the PCM memory.
POSSIBLE CAUSE	• Misfire • Front HO2S deterioration • Front HO2S heater malfunction • MAF sensor malfunction • Pressure regulator malfunction • Fuel pressure sensor malfunction • Relief valve (built-in fuel delivery pipe) malfunction • Spill valve control solenoid valve (built-in high pressure fuel pump) malfunction • High pressure fuel pump malfunction • Fuel pump malfunction • EGR valve improper operation • Variable swirl control improper operation • Purge solenoid valve improper operation • Purge solenoid valve malfunction (stuck open) • Purge solenoid hoses improper connection • PCV valve malfunction • Variable valve timing control system improper operation • PCM malfunction

Diagnostic procedure

STEP	INSPECTION		ACTION
1	**VERIFY FREEZE FRAME DATA AND DIAGNOSTIC MONITORING TEST RESULTS HAVE BEEN RECORDED** • Have the FREEZE FRAME DATA and DIAGNOSTIC MONITORING TEST RESULTS (Fuel system related) been recorded?	Yes	Go to the next step.
		No	Record the FREEZE FRAME DATA and DIAGNOSTIC MONITORING TEST RESULTS on the repair order, then go to the next step.
2	**VERIFY RELATED REPAIR INFORMATION AVAILABILITY** • Verify related Service Bulletins and/or on-line repair information availability. • Is any related repair information available?	Yes	Perform the repair or diagnosis according to the available repair information. • If the vehicle is not repaired, go to the next step.
		No	Go to the next step.
3	**VERIFY RELATED PENDING CODE OR STORED DTCS** • Turn the ignition switch to off, then to the ON position (Engine off). • Verify related pending code or stored DTCs. • Are other DTCs present?	Yes	If misfire the DTC is present, go to Step 8. If other DTCs is present, go to the applicable DTC inspection. (See 01–02B–14 DTC TABLE [L3 WITH TC].)
		No	If driveability concern is present, go to Step 8. If not, go to the next step.
4	**IDENTIFY TRIGGER DTC FOR FREEZE FRAME DATA** • Is DTC P2178 on FREEZE FRAME DATA?	Yes	Go to the next step.
		No	Go to troubleshooting procedures for DTC on FREEZE FRAME DATA.
5	**VERIFY CURRENT INPUT SIGNAL STATUS (IGNITION SWITCH TO THE ON POSITION/ IDLE)** • Access the APP1, APP2, ECT, MAF, TP and VSS PIDs using the WDS or equivalent. • Is there any signal that is far out of specification when the ignition switch is at the ON position and the engine runs?	Yes	Inspect the sensor and excessive resistance in related wiring harnesses. Repair if necessary. Then go to Step 19.
		No	Go to the next step.

STEP	INSPECTION		ACTION
6	**VERIFY CURRENT INPUT SIGNAL STATUS UNDER TROUBLE CONDITION** • Inspect the same PIDs as Step 5 while simulating FREEZE FRAME DATA condition. • Is there any signal which causes drastic changes?	Yes	Inspect the sensor and related wiring harnesses, repair or replace it. Then go to Step 19.
		No	Go to the next step.
7	**VERIFY CURRENT INPUT SIGNAL STATUS OF FRONT HO2S** • Access the O2S11 for P2177 PID using the WDS or equivalent. • Check the PID under following accelerator pedal condition in NEUTRAL. • Is the PID reading normal? — **–0.1—0.1 A** when idle — **More than 0.25 mA** just after release of accelerator pedal (lean condition)	Yes	Go to the next step.
		No	Visually inspect for any gas leakage between the exhaust manifold and the front HO2S. Then go to Step 19.
8	**VERIFY CURRENT INPUT SIGNAL STATUS OF MAF SENSOR** • Connect the WDS or equivalent to the DLC-2 • Start the engine. • Access the MAF PID. • Verify that the MAF PID changes quickly according to engine speed. • Is the PID normal?	Yes	Go to the next step.
		No	Replace the MAF/IAT sensor, then go to Step 19.
9	**INSPECT PURGE SOLENOID OPERATION** • Perform the Purge Control System Inspection. (See 01–03B–91 Purge Control System Inspection.) • Does the purge control system work properly?	Yes	Go to the next step.
		No	Repair or replace the malfunctioning part according to inspection result, then go to Step 19.
10	**INSPECT PCV VALVE OPERATION** • Inspect the PCV valve operation. (See 01–16B–13 POSITIVE CRANKCASE VENTILATION (PCV) VALVE INSPECTION [L3 WITH TC].) • Is the PCV valve normal?	Yes	Go to the next step.
		No	Replace the PCV valve, then go to Step 19
11	**INSPECT EGR VALVE OPERATION** • Perform the EGR Control System Inspection. (See 01–03B–90 EGR Control System Inspection.) • Does the EGR control system work properly?	Yes	Go to the next step.
		No	Repair or replace the malfunctioning part according to inspection result, then go to Step 19.
12	**INSPECT VARIABLE SWIRL CONTROL OPERATION** • Perform the Variable Swirl Control Operation Inspection. (See 01–03B–86 Variable Swirl System Operation Inspection.) • Does the variable swirl control work properly?	Yes	Go to the next step.
		No	Repair or replace the malfunctioning part according to inspection result, then go to Step 19.
13	**INSPECT VARIABLE VALVE TIMING CONTROL SYSTEM OPERATION** • Inspect the variable valve timing control system operation. (See 01–03B–93 Variable Valve Timing Control System Operation Inspection.) • Does the variable valve timing control system work properly?	Yes	Go to the next step.
		No	Repair or replace the malfunctioning part according to inspection results, then go to Step 19.
14	**INSPECT FUEL PRESSURE (HIGH-SIDE)** • Access and monitor FUEL_PRES PID. • Is the FUEL_PRES PID value within the specified? (See 01–40B–6 Using the WDS or Equivalent.)	Yes	Go to Step 18.
		No	Go to the next step.
15	**IDENTIFY CAUSE BY FUEL PRESSURE SENSOR OR HIGH PRESSURE FUEL PUMP** • Is the vehicle accelerate performance normally?	Yes	Go to the next step.
		No	Go to Step 17.

STEP	INSPECTION		ACTION
16	**INSPECT FUEL PRESSURE SENSOR** • Inspect the fuel pressure sensor. (See 01–40B–34 FUEL PRESSURE SENSOR INSPECTION [L3 WITH TC].) • Is the fuel pressure sensor normal?	Yes	Go to the next step.
		No	Replace the fuel delivery pipe, then go to Step 19.
17	**INSPECT HIGH PRESSURE FUEL PUMP** • Replace the high pressure fuel pump • Monitor FUEL_PRES PID • Is the FUEL_PRES PID value within the specified? (See 01–40B–6 Using the WDS or Equivalent.)	Yes	Go to Step 19.
		No	Go to the next step.
18	**INSPECT FUEL PRESSURE (LOW-SIDE)** • Connect the fuel pressure gauge between fuel pump and high pressure fuel pump. • Measure the low side fuel pressure. (See01–14B–5 FUEL LINE PRESSURE INSPECTION [L3 WITH TC].) • Is the low side fuel pressure within the specified?	Yes	Go to the next step.
		No	Inspect for following: • Fuel line restriction • Fuel filter clogging If okay replace the fuel pump. Then go to the next step.
19	**VERIFY TROUBLESHOOTING OF DTC P2178 COMPLETED** • Make sure to reconnect all disconnected connectors. • Clear the DTC from the PCM memory using the WDS or equivalent. • Perform the PCM Adaptive Memory Produce Drive Mode. (See 01–02B–9 OBD-II DRIVE MODE [L3 WITH TC].) • Is the PENDING CODE for this DTC present?	Yes	Replace the PCM, then go to the next step. (See 01–40B–6 PCM REMOVAL/INSTALLATION [L3 WITH TC].)
		No	Go to the next step.
20	**VERIFY AFTER REPAIR PROCEDURE** • Perform the "AFTER REPAIR PROCEDURE". (See 01–02B–8 AFTER REPAIR PROCEDURE [L3 WITH TC].) • Are any DTCs present?	Yes	Go to the applicable DTC inspection. (See 01–02B–14 DTC TABLE [L3 WITH TC].)
		No	Troubleshooting completed.

DTC P2187 [L3 WITH TC]

E6U010202100W44

DTC P2187	Fuel system too lean at idle
DETECTION CONDITION	• PCM monitors the short term fuel trim (SHRTFT) and long term fuel trim (LONGFT) during closed loop fuel control at idle. If the LONGFT and the sum total of these fuel trims exceed the preprogrammed criteria, the PCM determines that fuel system is too lean at idle. **Diagnostic support note** • This is a continuous monitor. (Fuel system) • MIL illuminates if the PCM detects the above malfunctioning condition in two consecutive drive cycles or in one drive cycle while the DTC for the same malfunction has been stored in the PCM. • PENDING CODE is available if the PCM detects the above malfunction conditions during the first drive cycle. • FREEZE FRAME DATA is available. • DTCs are stored in the PCM memory.
POSSIBLE CAUSE	• Misfire • Front HO2S deterioration • Front HO2S heater malfunction • MAF sensor malfunction • Pressure regulator malfunction • Fuel pressure sensor malfunction • Relief valve (built-in fuel delivery pipe) malfunction • Spill valve control solenoid valve (built-in high pressure fuel pump) malfunction • High pressure fuel pump malfunction • Fuel pump malfunction • Fuel filter clogged or restricted • Fuel leakage on fuel line from fuel delivery pipe and fuel pump • Exhaust system leakage • Purge solenoid valve malfunction • Purge solenoid hoses improper connection • Air suction in intake-air system • Insufficient engine compression • Variable valve timing control system improper operation • PCM malfunction

01–02B

ıgnostic procedure

STEP	INSPECTION		ACTION
1	**VERIFY FREEZE FRAME DATA AND DIAGNOSTIC MONITORING TEST RESULTS HAVE BEEN RECORDED** • Have the FREEZE FRAME DATA and DIAGNOSTIC MONITORING TEST RESULTS (Fuel system related) been recorded?	Yes	Go to the next step.
		No	Record the FREEZE FRAME DATA and DIAGNOSTIC MONITORING TEST RESULTS on the repair order, then go to the next step.
2	**VERIFY RELATED REPAIR INFORMATION AVAILABILITY** • Verify related Service Bulletins and/or on-line repair information availability. • Is any related repair information available?	Yes	Perform the repair or diagnosis according to the available repair information. • If the vehicle is not repaired, go to the next step.
		No	Go to the next step.
3	**VERIFY RELATED PENDING CODE OR STORED DTCS** • Turn the ignition switch to off, then to the ON position (Engine off). • Verify related pending code or stored DTCs. • Are other DTCs present?	Yes	If misfire DTC is present, go to Step 8. If other DTC is present, go to the applicable DTC inspection. (See 01–02B–14 DTC TABLE [L3 WITH TC].)
		No	If driveability concern is present, go to Step 8. If not, go to the next step.
4	**IDENTIFY TRIGGER DTC FOR FREEZE FRAME DATA** • Is DTC P2177 on FREEZE FRAME DATA?	Yes	Go to the next step.
		No	Go to troubleshooting procedures for DTC on FREEZE FRAME DATA.
5	**VERIFY CURRENT INPUT SIGNAL STATUS (IGNITION SWITCH TO THE ON POSITION/ IDLE)** • Access the APP1, APP2, ECT, MAF and TP PIDs using the WDS or equivalent.) • Is there any signal that is far out of specification when the ignition switch is at the ON position and the engine runs?	Yes	Inspect the sensor and excessive resistance in related wiring harnesses. Repair if necessary. Then go to Step 20.
		No	Go to the next step.

STEP	INSPECTION		ACTION
6	**VERIFY CURRENT INPUT SIGNAL STATUS UNDER TROUBLE CONDITION** • Inspect the same PIDs as Step 4 while simulating FREEZE FRAME DATA condition. • Is there any signal which causes drastic changes?	Yes	Inspect the sensor and related wiring harnesses, repair or replace it. Then go to Step 20.
		No	Go to the next step.
7	**VERIFY CURRENT INPUT SIGNAL STATUS OF FRONT HO2S** • Access the O2S11 for P2177 PID using the WDS or equivalent. • Check the PID under following accelerator pedal condition in NEUTRAL. • Is the PID reading normal? — **–0.1—0.1 A** when idle — **Below 0.25 mA** just after release of accelerator pedal (lean condition)	Yes	Go to the next step.
		No	Visually inspect for any gas leakage between exhaust manifold and front HO2S. Then go to Step 20.
8	**VERIFY CURRENT INPUT SIGNAL STATUS OF MAF SENSOR** • Connect the WDS or equivalent to the DLC-2. • Start the engine. • Access the MAF PID. • Verify that the MAF PID changes quickly according to engine speed. • Is the PID normal?	Yes	Go to the next step.
		No	Replace the MAF/IAT sensor, then go to Step 20.
9	**INSPECT FOR EXCESSIVE AIR SUCTION OF INTAKE AIR SYSTEM** • Visually inspect for loosen, cracks or damages hoses on intake-air system. • Is there any malfunction?	Yes	Repair or replace the source of air suction, then go to Step 20.
		No	Go to the next step.
10	**INSPECT PURGE SOLENOID VALVE STUCK OPEN** • Turn the ignition switch to off. • Disconnect the both hoses from purge solenoid valve. • Blow the air through purge solenoid valve. • Does the air blow through?	Yes	Replace the purge solenoid valve. Then go to Step 20.
		No	Go to the next step.
11	**INSPECT FUEL PRESSURE (HIGH-SIDE)** • Access and monitor FUEL_PRES PID. • Is the FUEL_PRES PID value within the specified? (See 01–40B–6 PCM INSPECTION [L3 WITH TC].)	Yes	Go to Step 15.
		No	Go to the next step.
12	**IDENTIFY CAUSE BY FUEL PRESSURE SENSOR OR HIGH PRESSURE FUEL PUMP** • Is the vehicle accelerate performance normally?	Yes	Go to the next step.
		No	Go to Step 14.
13	**INSPECT FUEL PRESSURE SENSOR** • Inspect the fuel pressure sensor. (See01–40B–34 FUEL PRESSURE SENSOR INSPECTION [L3 WITH TC].) • Is the fuel pressure sensor normal?	Yes	Go to Step 15.
		No	Replace the fuel delivery pipe, then go to Step 20.
14	**INSPECT HIGH PRESSURE FUEL PUMP** • Replace the high pressure fuel pump • Monitor FUEL_PRES PID • Is the FUEL_PRES PID value within the specified? (See 01–40B–6 Using the WDS or Equivalent.)	Yes	Go to Step 20.
		No	Go to the next step.
15	**INSPECT FUEL PRESSURE (LOW-SIDE)** • Connect the fuel pressure gauge between fuel pump and high pressure fuel pump. • Measure the low side fuel pressure. (See01–14B–5 FUEL LINE PRESSURE INSPECTION [L3 WITH TC].) • Is the low side fuel pressure within the specified?	Yes	Go to the next step.
		No	Inspect for following: • Fuel line restriction • Fuel filter clogging If okay replace the fuel pump. Then go to Step 20.

STEP	INSPECTION		ACTION
16	**INSPECT IGNITION SYSTEM** • Perform the spark test. (See 01–03B–90 Spark Test.) • Is strong blue spark visible at each cylinder?	Yes	Go to the next step.
		No	Repair or replace the malfunctioning part according to spark test results, then go to Step 20.
17	**INSPECT ENGINE COMPRESSION** • Inspect the engine compression. (See 01–10B–9 COMPRESSION INSPECTION [L3 WITH TC].) • Is it normal?	Yes	Go to the next step.
		No	Implement the engine overhaul for repairs, then go to Step 20.
18	**INSPECT VARIABLE VALVE TIMING CONTROL SYSTEM OPERATION** • Inspect the variable valve timing control system operation. (See 01–03B–93 Variable Valve Timing Control System Operation Inspection.) • Does the variable valve timing control system work properly?	Yes	Go to the next step.
		No	Repair or replace the malfunctioning part according to inspection results, then go to Step 20.
19	**INSPECT FUEL INJECTOR OPERATION** • Remove the fuel injector. • Inspect the fuel injector (resistance, injection amount). (See 01–14B–29 FUEL INJECTOR INSPECTION [L3 WITH TC].) • Is the fuel injector normal?	Yes	Go to the next step.
		No	Replace the fuel injector, then go to the next step.
20	**VERIFY TROUBLESHOOTING OF DTC P2187 COMPLETED** • Make sure to reconnect all disconnected connectors. • Clear the DTC from the PCM memory using the WDS or equivalent. • Perform the PCM Adaptive Memory Produce Drive Mode. (See 01–02B–9 OBD-II DRIVE MODE [L3 WITH TC].) • Is the PENDING CODE for this DTC present?	Yes	Replace the PCM, then go to the next step. (See 01–40B–6 PCM REMOVAL/INSTALLATION [L3 WITH TC].)
		No	Go to the next step.
21	**VERIFY AFTER REPAIR PROCEDURE** • Perform the "AFTER REPAIR PROCEDURE". (See 01–02B–8 AFTER REPAIR PROCEDURE [L3 WITH TC].) • Are any DTCs present?	Yes	Go to the applicable DTC inspection. (See 01–02B–14 DTC TABLE [L3 WITH TC].)
		No	Troubleshooting completed.

DTC P2188 [L3 WITH TC]

E6U010202100W45

DTC P2188	Fuel system too rich at idle
DETECTION CONDITION	• PCM monitors the short term fuel trim (SHRTFT) and long term fuel trim (LONGFT) during closed loop fue control at idle. If the LONGFT and the sum total of these fuel trims exceed the preprogrammed criteria, th PCM determines that fuel system is too rich at idle. **Diagnostic support note** • This is a continuous monitor. (Fuel system) • MIL illuminates if the PCM detects the above malfunctioning condition in two consecutive drive cycles or in one drive cycle while the DTC for the same malfunction has been stored in the PCM. • PENDING CODE is available if the PCM detects the above malfunction conditions during the first drive cycle. • FREEZE FRAME DATA is available. • DTCs are stored in the PCM memory.
POSSIBLE CAUSE	• Misfire • Front HO2S deterioration • Front HO2S heater malfunction • MAF sensor malfunction • Pressure regulator malfunction • Fuel pressure sensor malfunction • Relief valve (built-in fuel delivery pipe) malfunction • Spill valve control solenoid valve (built-in high pressure fuel pump) malfunction • High pressure fuel pump malfunction • Fuel pump malfunction • EGR valve stuck open • Variable swirl control improper operation • Purge solenoid valve improper operation • Purge solenoid valve malfunction (stuck open) • Purge solenoid hoses improper connection • PCV valve malfunction • Variable valve timing control system improper operation • PCM malfunction

Diagnostic procedure

STEP	INSPECTION		ACTION
1	**VERIFY FREEZE FRAME DATA AND DIAGNOSTIC MONITORING TEST RESULTS HAVE BEEN RECORDED** • Have the FREEZE FRAME DATA and DIAGNOSTIC MONITORING TEST RESULTS (Fuel system related) been recorded?	Yes	Go to the next step.
		No	Record the FREEZE FRAME DATA and DIAGNOSTIC MONITORING TEST RESULTS on the repair order, then go to the next step.
2	**VERIFY RELATED REPAIR INFORMATION AVAILABILITY** • Verify related Service Bulletins and/or on-line repair information availability. • Is any related repair information available?	Yes	Perform the repair or diagnosis according to the available repair information. • If the vehicle is not repaired, go to the next step.
		No	Go to the next step.
3	**VERIFY RELATED PENDING CODE OR STORED DTCS** • Turn the ignition switch to off, then to the ON position (Engine off). • Verify related pending code or stored DTCs. • Are other DTCs present?	Yes	If misfire the DTC is present, go to Step 8. If other DTCs is present, go to the applicable DTC inspection. (See 01–02B–14 DTC TABLE [L3 WITH TC].)
		No	If driveability concern is present, go to Step 8. If not, go to the next step.
4	**IDENTIFY TRIGGER DTC FOR FREEZE FRAME DATA** • Is DTC P2178 on FREEZE FRAME DATA?	Yes	Go to the next step.
		No	Go to troubleshooting procedures for DTC on FREEZE FRAME DATA.
5	**VERIFY CURRENT INPUT SIGNAL STATUS (IGNITION SWITCH TO THE ON POSITION/ IDLE)** • Access the APP1, APP2, ECT, MAF, TP and VSS PIDs using the WDS or equivalent. • Is there any signal that is far out of specification when the ignition switch is at the ON position and engine runs?	Yes	Inspect the sensor and excessive resistance in related wiring harnesses. Repair or if necessary. Then go to Step 19.
		No	Go to the next step.

STEP	INSPECTION		ACTION
6	**VERIFY CURRENT INPUT SIGNAL STATUS UNDER TROUBLE CONDITION** • Inspect the same PIDs as Step 5 while simulating FREEZE FRAME DATA condition. • Is there any signal which causes drastic changes?	Yes	Inspect the sensor and related wiring harnesses, repair or replace it. Then go to Step 19.
		No	Go to the next step.
7	**VERIFY CURRENT INPUT SIGNAL STATUS OF FRONT HO2S** • Access the O2S11 for P2177 PID using the WDS or equivalent. • Check the PID under following accelerator pedal condition in NEUTRAL. • Is the PID reading normal? — **–0.1—0.1 A** when idle — **Below 0.25 mA** just after release of accelerator pedal (lean condition)	Yes	Go to the next step.
		No	Visually inspect for any gas leakage between the exhaust manifold and the front HO2S. Then go to Step 19.
8	**VERIFY CURRENT INPUT SIGNAL STATUS OF MAF SENSOR** • Connect the WDS or equivalent to the DLC-2. • Start the engine. • Access the MAF PID. • Verify that the MAF PID changes quickly according to engine speed. • Is the PID normal?	Yes	Go to the next step.
		No	Replace the MAF/IAT sensor, then go to Step 19.
9	**INSPECT PURGE SOLENOID OPERATION** • Perform the Purge Control System Inspection. (See 01–03B–91 Purge Control System Inspection.) • Does the purge control system work properly?	Yes	Go to the next step.
		No	Repair or replace the malfunctioning part according to inspection result, then go to Step 19.
10	**INSPECT PCV VALVE OPERATION** • Inspect the PCV valve operation. (See 01–16B–13 POSITIVE CRANKCASE VENTILATION (PCV) VALVE INSPECTION [L3 WITH TC].) • Is the PCV valve normal?	Yes	Go to the next step.
		No	Replace the PCV valve, then go to Step 19.
11	**INSPECT VARIABLE SWIRL CONTROL OPERATION** • Perform the Variable Swirl Control Operation Inspection. (See 01–03B–86 Variable Swirl System Operation Inspection.) • Does the variable swirl control work properly?	Yes	Go to the next step.
		No	Repair or replace the malfunctioning part according to inspection result, then go to Step 19.
12	**INSPECT VARIABLE VALVE TIMING CONTROL SYSTEM OPERATION** • Inspect the variable valve timing control system operation. (See 01–03B–93 Variable Valve Timing Control System Operation Inspection.) • Does the variable valve timing control system work properly?	Yes	Go to the next step.
		No	Repair or replace the malfunctioning part according to inspection results, then go to Step 18.
13	**INSPECT IF EGR VALVE IS STUCK OPEN** • Remove the EGR valve. • Does the EGR valve stuck open?	Yes	Clean or replace the EGR valve, then go to Step 19.
		No	Go to the next step.
14	**INSPECT FUEL PRESSURE (HIGH-SIDE)** • Access and monitor FUEL_PRES PID. • Is the FUEL_PRES PID value within the specified? (See 01–40B–6 Using the WDS or Equivalent.)	Yes	Go to Step 18.
		No	Go to the next step.
15	**IDENTIFY CAUSE BY FUEL PRESSURE SENSOR OR HIGH PRESSURE FUEL PUMP** • Is the vehicle accelerate performance normally?	Yes	Go to the next step.
		No	Go to Step 17.

STEP	INSPECTION		ACTION
16	**INSPECT FUEL PRESSURE SENSOR** • Inspect the fuel pressure sensor. (See01–40B–34 FUEL PRESSURE SENSOR INSPECTION [L3 WITH TC].) • Is the fuel pressure sensor normal?	Yes	Go to Step 19.
		No	Replace the fuel delivery pipe, then go to Step 19.
17	**INSPECT HIGH PRESSURE FUEL PUMP** • Replace the high pressure fuel pump • Monitor FUEL_PRES PID • Is the FUEL_PRES PID value within the specified? (See 01–40B–6 Using the WDS or Equivalent.)	Yes	Go to Step 19.
		No	Go to the next step.
18	**INSPECT FUEL PRESSURE (LOW-SIDE)** • Connect the fuel pressure gauge between fuel pump and high pressure fuel pump. • Measure the low side fuel pressure. (See01–14B–5 FUEL LINE PRESSURE INSPECTION [L3 WITH TC].) • Is the low side fuel pressure within the specified?	Yes	Go to the next step.
		No	Inspect for following: • Fuel line restriction • Fuel filter clogging If okay replace the fuel pump. Then go to the next step.
19	**VERIFY TROUBLESHOOTING OF DTC P2188 COMPLETED** • Make sure to reconnect all disconnected connectors. • Clear the DTC from the PCM memory using the WDS or equivalent. • Perform the PCM Adaptive Memory Produce Drive Mode. (See 01–02B–9 OBD-II DRIVE MODE [L3 WITH TC].) • Is the PENDING CODE for this DTC present?	Yes	Replace the PCM, then go to the next step. (See 01–40B–6 PCM REMOVAL/INSTALLATION [L3 WITH TC].)
		No	Go to the next step.
20	**VERIFY AFTER REPAIR PROCEDURE** • Perform the "AFTER REPAIR PROCEDURE". (See 01–02B–8 AFTER REPAIR PROCEDURE [L3 WITH TC].) • Are any DTCs present?	Yes	Go to the applicable DTC inspection. (See 01–02B–14 DTC TABLE [L3 WITH TC].)
		No	Troubleshooting completed.

DTC P2195 [L3 WITH TC]

E6U010202100W46

DTC P2195	Front HO2S signal stuck lean
DETECTION CONDITION	• The PCM monitors the front HO2S output current when the following conditions are met. If the average output current is **more than 1.2 A** for **25 s**, the PCM determines that the front HO2S has a malfunction. **MONITORING CONDITION** — ECT: more than **70 °C {158 °F}** — Engine speed: **1,000—3,200 rpm** — Charging efficiency: **20—62.5%** — Output voltage from the rear HO2S: **0.2 V or above** **Diagnostic support note** • This is an intermittent monitor (HO2S). • The MIL illuminates if the PCM detects the above malfunction condition in two consecutive drive cycles or in one drive cycle while the DTC for the same malfunction has been stored in the PCM. • PENDING CODE is available if the PCM detects the above malfunction condition during the first drive cycle. • FREEZE FRAME DATA is available. • The DTCs are stored in the PCM memory.
POSSIBLE CAUSE	• Front HO2S malfunction • Fuel injector malfunction • Insufficient fuel line pressure • Fuel pressure sensor malfunction • Relief valve (built-in fuel delivery pipe) malfunction • Spill valve control solenoid valve (built-in high pressure fuel pump) malfunction • High pressure fuel pump malfunction • Exhaust gas leakage • Air suction at intake-air system malfunction • Fuel leakage • MAF sensor malfunction • ECT sensor malfunction • PCM malfunction

Diagnostic procedure

TEP	INSPECTION		ACTION
1	**VERIFY FREEZE FRAME DATA AND DIAGNOSTIC MONITORING TEST RESULTS HAVE BEEN RECORDED** • Have the FREEZE FRAME DATA and DIAGNOSTIC MONITORING TEST RESULTS (HO2S related) been recorded?	Yes	Go to the next step.
		No	Record the FREEZE FRAME DATA and DIAGNOSTIC MONITORING TEST RESULTS on the repair order, then go to the next step.
2	**VERIFY RELATED REPAIR INFORMATION AVAILABILITY** • Verify related Service Bulletins and/or on-line repair information availability. • Is any related repair information available?	Yes	Perform the repair or diagnosis according to the available repair information. • If the vehicle is not repaired, go to the next step.
		No	Go to the next step.
3	**VERIFY RELATED PENDING CODE OR STORED DTC** • Turn the ignition switch to off, then to ON position (Engine off). • Verify the related PENDING CODE or stored DTCs. • Is the DTC P2177 or P2187 also present?	Yes	Go to the applicable DTC inspection. (See 01–02B–14 DTC TABLE [L3 WITH TC].)
		No	Go to the next step.
4	**IDENTIFY TRIGGER DTC FOR FREEZE FRAME DATA** • Is DTC P2195 on FREEZE FRAME DATA?	Yes	Go to the next step.
		No	Go to FREEZE FRAME DATA DTC inspection. (See 01–02B–14 DTC TABLE [L3 WITH TC].)
5	**VERIFY CURRENT INPUT SIGNAL STATUS** • Connect the WDS or equivalent to the DLC-2. • Verify the following PIDs. (See 01–40B–6 PCM INSPECTION [L3 WITH TC].) — APP1 — APP2 — ECT — MAF — TP — VSS • Are the PIDs normal?	Yes	Go to the next step.
		No	Inspect the malfunctioning part according to the inspection results. Then go to Step 16.

STEP	INSPECTION		ACTION
6	**VERIFY CURRENT INPUT SIGNAL STATUS UNDER FREEZE FRAME DATA CONDITION** • Connect the WDS or equivalent to the DLC-2. • Verify the following PIDs under FREEZE FRAME DATA condition. (See 01–40B–6 PCM INSPECTION [L3 WITH TC].) — APP1 — APP2 — ECT — MAF — TP — VSS • Are the PIDs normal?	Yes	Go to the next step.
		No	Inspect the malfunctioning part according to the inspection results. Then go to Step 16.
7	**INSPECT INTAKE-AIR SYSTEM FOR EXCESSIVE AIR SUCTION** • Visually inspect for loosen, cracks or damages hose in intake-air system. • Is there any malfunction?	Yes	Repair or replace the malfunctioning part, then go to Step 16.
		No	Go to the next step.
8	**VERIFY CURRENT INPUT SIGNAL STATUS OF MAF SENSOR** • Connect the WDS or equivalent to the DLC-2. • Start the engine. • Access the MAF PID. • Verify that the MAF PID changes quickly according to engine speed. • Is the PID normal?	Yes	Go to the next step.
		No	Replace the MAF/IAT sensor, then go to Step 16.
9	**INSPECT FRONT HO2S** • Inspect the front HO2S. (See 01–40B–42 HEATED OXYGEN SENSOR (HO2S) INSPECTION [L3 WITH TC].) • Is there any malfunction?	Yes	Replace the front HO2S, then go to Step 16. (See 01–15B–3 HO2S Removal Note.)
		No	Go to the next step.
10	**INSPECT FUEL INJECTOR** • Inspect the fuel injector. (See 01–14B–29 FUEL INJECTOR INSPECTION [L3 WITH TC].) • Is there any malfunction?	Yes	Replace the suspected fuel injector, then go to Step 16. (See 01–14B–25 FUEL INJECTOR REMOVAL/ INSTALLATION [L3 WITH TC].)
		No	Go to the next step.
11	**INSPECT FUEL PRESSURE (HIGH-SIDE)** • Access and monitor FUEL_PRES PID. • Is the FUEL_PRES PID value within the specified? (See 01–40B–6 Using the WDS or Equivalent.)	Yes	Go to Step 15.
		No	Go to the next step.
12	**IDENTIFY CAUSE BY FUEL PRESSURE SENSOR OR HIGH PRESSURE FUEL PUMP** • Is the vehicle accelerate performance normally?	Yes	Go to the next step.
		No	Go to Step 14.
13	**INSPECT FUEL PRESSURE SENSOR** • Inspect the fuel pressure sensor. (See01–40B–34 FUEL PRESSURE SENSOR INSPECTION [L3 WITH TC].) • Is the fuel pressure sensor normal?	Yes	Go to Step 15.
		No	Replace the fuel delivery pipe, then go to Step 16.
14	**INSPECT HIGH PRESSURE FUEL PUMP** • Replace the high pressure fuel pump • Monitor FUEL_PRES PID • Is the FUEL_PRES PID value within the specified? (See 01–40B–6 Using the WDS or Equivalent.)	Yes	Go to Step 16.
		No	Go to the next step.

STEP	INSPECTION		ACTION
15	**INSPECT FUEL PRESSURE (LOW-SIDE)** • Connect the fuel pressure gauge between fuel pump and high pressure fuel pump. (See01–14B–20 HIGH PRESSURE FUEL PUMP INSPECTION [L3 WITH TC].) • Measure the low side fuel pressure. 01–14B–5 FUEL LINE PRESSURE INSPECTION [L3 WITH TC] • Is the low side fuel pressure within the specified?	Yes	Go to the next step.
		No	Inspect for following: • Fuel line restriction • Fuel filter clogging If okay replace the fuel pump. Then go to the next step.
16	**VERIFY TROUBLESHOOTING OF DTC P2195 COMPLETED** • Make sure to reconnect all disconnected connectors. • Clear the DTC from the PCM memory using the WDS or equivalent. • Perform the PCM Adopted Memory Produce Drive Mode and HO2S heater, and TWC Repair Verification Drive Mode. (See 01–02B–9 OBD-II DRIVE MODE [L3 WITH TC].) • Is the PENDING CODE for this DTC present?	Yes	Replace the PCM, then go to the next step. (See 01–40B–6 PCM REMOVAL/INSTALLATION [L3 WITH TC].)
		No	Go to the next step.
17	**VERIFY AFTER REPAIR PROCEDURE** • Perform the "AFTER REPAIR PROCEDURE". (See 01–02B–8 AFTER REPAIR PROCEDURE [L3 WITH TC].) • Are any DTCs present?	Yes	Go to the applicable DTC inspection. (See 01–02B–14 DTC TABLE [L3 WITH TC].)
		No	Troubleshooting completed.

DTC P2196 [L3 WITH TC]

E6U010202100W47

DTC P2196	Front HO2S signal stuck rich
DETECTION CONDITION	• The PCM monitors the front HO2S output current when the following conditions are met. If the average output current is **less than 0.85 A** for **25 s**, the PCM determines that the front HO2S has a malfunction. **MONITORING CONDITION** — ECT: **more than 70 °C {158 °F}** — Engine speed: **1,000—3,200 rpm** — Charging efficiency: **20—62.5%** — Output voltage from the rear HO2S: **0.8 V or less** **Diagnostic support note** • This is an intermittent monitor (HO2S). • The MIL illuminates if the PCM detects the above malfunction condition in two consecutive drive cycles or in one drive cycle while the DTC for the same malfunction has been stored in the PCM. • PENDING CODE is available if the PCM detects the above malfunction condition during the first drive cycle. • FREEZE FRAME DATA is available. • DTCs are stored in the PCM memory.
POSSIBLE CAUSE	• Front HO2S malfunction • Fuel injector malfunction • Excessive fuel pressure • Fuel pressure sensor malfunction • Relief valve (built-in fuel delivery pipe) malfunction • Spill valve control solenoid valve (built-in high pressure fuel pump) malfunction • High pressure fuel pump malfunction • Restriction in intake-air system • MAF sensor malfunction • ECT sensor malfunction • PCM malfunction

Diagnostic procedure

STEP	INSPECTION		ACTION
1	**VERIFY FREEZE FRAME DATA AND DIAGNOSTIC MONITORING TEST RESULTS HAVE BEEN RECORDED** • Have the FREEZE FRAME DATA and DIAGNOSTIC MONITORING TEST RESULTS (HO2S related) been recorded?	Yes	Go to the next step.
		No	Record the FREEZE FRAME DATA and DIAGNOSTIC MONITORING TEST RESULTS on the repair order, then go to the next step.
2	**VERIFY RELATED REPAIR INFORMATION AVAILABILITY** • Verify related Service Bulletins and/or on-line repair information availability. • Is any related repair information available?	Yes	Perform the repair or diagnosis according to the available repair information. • If the vehicle is not repaired, go to the next step.
		No	Go to the next step.
3	**VERIFY RELATED PENDING CODE OR STORED DTC** • Turn the ignition switch to off, then ON position (Engine off). • Verify the related PENDING CODE or stored DTCs. • Is the DTC P2177 or P2187 also present?	Yes	Go to the appropriate DTC inspection. (See 01–02B–14 DTC TABLE [L3 WITH TC].)
		No	Go to the next step.
4	**IDENTIFY TRIGGER DTC FOR FREEZE FRAME DATA** • Is DTC P2196 on FREEZE FRAME DATA?	Yes	Go to the next step.
		No	Go to FREEZE FRAME DATA DTC inspection. (See 01–02B–14 DTC TABLE [L3 WITH TC].)
5	**VERIFY CURRENT INPUT SIGNAL STATUS** • Connect the WDS or equivalent to the DLC-2. • Verify the following PIDs. (See 01–40B–6 PCM INSPECTION [L3 WITH TC].) — APP1 — APP2 — ECT — MAF — TP — VSS • Are the PIDs normal?	Yes	Go to the next step.
		No	Inspect the malfunctioning part according to the inspection results. Then go to Step 15.
6	**VERIFY CURRENT INPUT SIGNAL STATUS UNDER FREEZE FRAME DATA CONDITION** • Connect the WDS or equivalent to the DLC-2. • Verify the following PIDs under the FREEZE FRAME DATA condition. — APP1 — APP2 — ECT — MAF — TP — VSS • Are the PIDs normal?	Yes	Go to the next step.
		No	Inspect the malfunctioning part according to the inspection results. Then go to Step 15.
7	**VERIFY CURRENT INPUT SIGNAL STATUS OF MAF SENSOR** • Connect the WDS or equivalent to the DLC-2. • Start the engine. • Access the MAF PID. • Verify that the MAF PID changes quickly according to engine speed. • Is the PID normal?	Yes	Go to the next step.
		No	Replace the MAF/IAT sensor, then go to Step 15.
8	**INSPECT FRONT HO2S** • Inspect the front HO2S. (See 01–40B–42 HEATED OXYGEN SENSOR (HO2S) INSPECTION [L3 WITH TC].) • Is there any malfunction?	Yes	Replace the front HO2S, then go to Step 15. (See 01–15B–3 HO2S Removal Note.)
		No	Go to the next step.
9	**INSPECT FUEL INJECTOR** • Inspect the fuel injector. (See 01–14B–29 FUEL INJECTOR INSPECTION [L3 WITH TC].) • Is there any malfunction?	Yes	Replace the suspected fuel injector, then go to Step 15. (See 01–14B–25 FUEL INJECTOR REMOVAL/ INSTALLATION [L3 WITH TC].)
		No	Go to the next step.

STEP	INSPECTION		ACTION
10	**INSPECT FUEL PRESSURE (HIGH-SIDE)** • Access and monitor FRP PID. • Is the FRP PID value within the specified? (See 01–40B–6 Using the WDS or Equivalent.)	Yes	Go to Step 14.
		No	Go to the next step.
11	**IDENTIFY CAUSE BY FUEL PRESSURE SENSOR OR HIGH PRESSURE FUEL PUMP** • Is the vehicle accelerate performance normally?	Yes	Go to the next step.
		No	Go to Step 16.
12	**INSPECT FUEL PRESSURE SENSOR** • Inspect the fuel pressure sensor. (See01–40B–34 FUEL PRESSURE SENSOR INSPECTION [L3 WITH TC].) • Is the fuel pressure sensor normal?	Yes	Go to Step 14.
		No	Replace the fuel delivery pipe, then go to Step 15.
13	**INSPECT HIGH PRESSURE FUEL PUMP** • Replace the high pressure fuel pump • Monitor FUEL_PRES PID • Is the FUEL_PRES PID value within the specified? (See 01–40B–6 Using the WDS or Equivalent.)	Yes	Go to Step 15.
		No	Go to the next step.
14	**INSPECT FUEL PRESSURE (LOW-SIDE)** • Connect the fuel pressure gauge between fuel pump and high pressure fuel pump. • Measure the low side fuel pressure. (See01–14B–5 FUEL LINE PRESSURE INSPECTION [L3 WITH TC].) • Is the low side fuel pressure within the specified?	Yes	Go to the next step.
		No	Inspect for following: • Fuel line restriction • Fuel filter clogging If okay replace the fuel pump. Then go to the next step.
15	**VERIFY TROUBLESHOOTING OF DTC P2196 COMPLETED** • Make sure to reconnect all disconnected connectors. • Clear the DTC from the PCM memory using the WDS or equivalent. • Perform the PCM Adopted Memory Produce Drive Mode and HO2S heater, and TWC Repair Verification Drive Mode. (See 01–02B–9 OBD-II DRIVE MODE [L3 WITH TC].) • Is the PENDING CODE for this DTC present?	Yes	Replace the PCM, then go to the next step. (See 01–40B–6 PCM REMOVAL/INSTALLATION [L3 WITH TC].)
		No	Go to the next step.
16	**VERIFY AFTER REPAIR PROCEDURE** • Perform the "AFTER REPAIR PROCEDURE". (See 01–02B–8 AFTER REPAIR PROCEDURE [L3 WITH TC].) • Are any DTCs present?	Yes	Go to the applicable DTC inspection. (See 01–02B–14 DTC TABLE [L3 WITH TC].)
		No	Troubleshooting completed.

DTC P2228 [L3 WITH TC]

E6U010202200W09

DTC P2228	BARO sensor circuit low input
DETECTION CONDITION	• PCM monitors the input voltage from the BARO sensor. If the input voltage at the PCM is **below 1.95 V**, the PCM determines that the BARO sensor circuit has a malfunction. **Diagnostic support note** • This is a continuous monitor (CCM). • MIL illuminates if the PCM detects the above malfunction condition during the first drive cycle. • FREEZE FRAME DATA is available. • DTCs are stored in the PCM memory.
POSSIBLE CAUSE	• BARO sensor malfunction • PCM malfunction

Diagnostic procedure

STEP	INSPECTION		ACTION
1	**VERIFY FREEZE FRAME DATA HAS BEEN RECORDED** • Has the FREEZE FRAME DATA been recorded?	Yes	Go to the next step.
		No	Record FREEZE FRAME DATA on the repair order, then go to the next step.
2	**VERIFY RELATED REPAIR INFORMATION AVAILABILITY** • Check for related Service Bulletins and/or on-line repair information availability. • Is any related repair information available?	Yes	Perform the repair or diagnosis according to the available repair information. • If the vehicle is not repaired, go to the next step.
		No	Go to the next step.
3	**INSPECT BARO SENSOR MALFUNCTION** • Start the engine. • Access the BARO PID using the WDS or equivalent. • Inspect that the BARO PID is within the specification. • Is there any malfunction?	Yes	Replace the PCM, then go to the next step.
		No	Go to the next step.
4	**VERIFY TROUBLESHOOTING OF DTC P2228 COMPLETED** • Make sure to reconnect all disconnected connectors. • Turn the ignition switch to the ON position (Engine off). • Clear the DTC from the memory using the WDS or equivalent. • Start the engine and warm it up completely. • Is the same DTC present?	Yes	Replace the PCM, then go to the next step. (See 01–40B–6 PCM REMOVAL/INSTALLATION [L3 WITH TC].)
		No	No concern is detected. Go to the next step.
5	**VERIFY AFTER REPAIR PROCEDURE** • Perform the "After Repair Procedure". (See 01–02B–8 AFTER REPAIR PROCEDURE [L3 WITH TC].) • Are any DTCs present?	Yes	Go to the applicable DTC inspection. (See 01–02B–14 DTC TABLE [L3 WITH TC].)
		No	Troubleshooting completed.

DTC P2229 [L3 WITH TC]

E6U010202200W10

DTC P2229	BARO sensor circuit high input
DETECTION CONDITION	• PCM monitors the input voltage from the BARO sensor. If the input voltage at the PCM is **above 4.45 V**, the PCM determines that the BARO sensor circuit has a malfunction. **Diagnostic support note** • This is a continuous monitor (CCM). • MIL illuminates if the PCM detects the above malfunction condition during the first drive cycle. • FREEZE FRAME DATA is available. • DTCs are stored in the PCM memory.
POSSIBLE CAUSE	• BARO sensor malfunction • PCM malfunction

Diagnostic procedure

STEP	INSPECTION		ACTION
1	**VERIFY FREEZE FRAME DATA HAS BEEN RECORDED** • Has the FREEZE FRAME DATA been recorded?	Yes	Go to the next step.
		No	Record FREEZE FRAME DATA on the repair order, then go to the next step.
2	**VERIFY RELATED REPAIR INFORMATION AVAILABILITY** • Check for related Service Bulletins and/or on-line repair information availability. • Is any related repair information available?	Yes	Perform the repair or diagnosis according to the available repair information. • If the vehicle is not repaired, go to the next step.
		No	Go to the next step.
3	**INSPECT BARO SENSOR MALFUNCTION** • Start the engine. • Access the BARO PID using the WDS or equivalent. • Inspect that the BARO PID is within the specification. • Is there any malfunction?	Yes	Replace the PCM, then go to the next step.
		No	Go to the next step.
4	**VERIFY TROUBLESHOOTING OF DTC P2229 COMPLETED** • Make sure to reconnect all disconnected connectors. • Turn the ignition switch to the ON position (Engine off). • Clear the DTC from the memory using the WDS or equivalent. • Start engine and warm it up completely. • Is the same DTC present?	Yes	Replace the PCM, then go to the next step. (See 01–40B–6 PCM REMOVAL/INSTALLATION [L3 WITH TC].)
		No	No concern is detected. Go to the next step.
5	**VERIFY AFTER REPAIR PROCEDURE** • Perform the "After Repair Procedure". (See 01–02B–8 AFTER REPAIR PROCEDURE [L3 WITH TC].) • Are any DTCs present?	Yes	Go to the applicable DTC inspection. (See 01–02B–14 DTC TABLE [L3 WITH TC].)
		No	Troubleshooting completed.

DTC P2237 [L3 WITH TC]

E6U010202200W11

DTC P2237	Front HO2S positive current control circuit open
DETECTION CONDITION	• The PCM monitors the front HO2S positive current control circuit voltage. If the voltage does not change with the PCM control value while the engine is running, the PCM determines that the front HO2S positive current control circuit is open. **Diagnostic support note** • This is a continuous monitor. (HO2S) • MIL illuminates if the PCM detects the above malfunctioning condition in two consecutive drive cycles or in one drive cycle while the DTC for the same malfunction has been stored in the PCM. • PENDING CODE is available if the PCM detects the above malfunction conditions during the first drive cycle. • FREEZE FRAME DATA is available. • DTCs are stored in the PCM memory.
POSSIBLE CAUSE	• Front HO2S malfunction • Connector or terminal malfunction • Open circuit between PCM terminal 2D and front HO2S terminal 1A • PCM malfunction

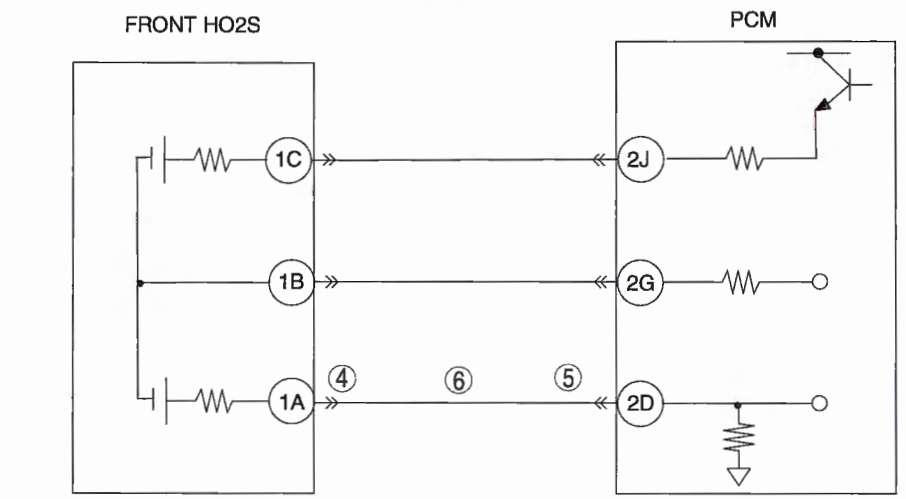

FRONT HO2S
WIRING HARNESS-SIDE CONNECTOR

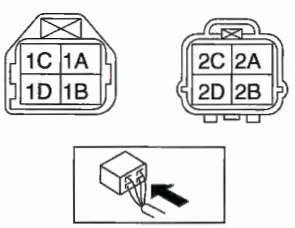

PCM
WIRING HARNESS-SIDE CONNECTOR

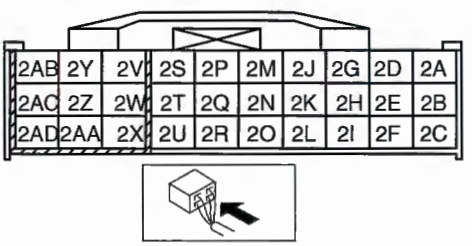

Diagnostic procedure

STEP	INSPECTION		ACTION
1	**VERIFY FREEZE FRAME DATA AND DIAGNOSTIC MONITORING TEST RESULTS HAVE BEEN RECORDED** • Have the FREEZE FRAME DATA and DIAGNOSTIC MONITORING TEST RESULTS (HO2S related) been recorded?	Yes	Go to the next step.
		No	Record the FREEZE FRAME DATA and DIAGNOSTIC MONITORING TEST RESULTS on the repair order, then go to the next step.
2	**VERIFY RELATED REPAIR INFORMATION AVAILABILITY** • Verify related Service Bulletins and/or on-line repair information availability. • Is any related repair information available?	Yes	Perform the repair or diagnosis according to the available repair information. If the vehicle is not repaired, go to the next step.
		No	Go to the next step.
3	**IDENTIFY TRIGGER DTC FOR FREEZE FRAME DATA** • Is DTC P2237 on FREEZE FRAME DATA?	Yes	Go to the next step.
		No	Go to troubleshooting for DTC on FREEZE FRAME DATA. (See01–02B–14 DTC TABLE [L3 WITH TC].)
4	**INSPECT FRONT HO2S CONNECTOR FOR POOR CONNECTION** • Turn the ignition switch to off. • Disconnect the front HO2S connector. • Inspect for poor connection (such as damaged/ pulled-out pins, and corrosion). • Is there any malfunction?	Yes	Repair or replace the terminal, then go to Step.
		No	Go to the next step.
5	**INSPECT PCM CONNECTOR FOR POOR CONNECTION** • Turn the ignition switch to off. • Disconnect the PCM connector. • Inspect for poor connection (such as damaged/ pulled-out pins, and corrosion). • Is there any malfunction?	Yes	Repair or replace the terminal, then go to Step.
		No	Go to the next step.
6	**INSPECT FRONT HO2S POSITIVE CURRENT CIRCUIT FOR OPEN AT PCM - FRONT HO2S** • Front HO2S and PCM connectors disconnected. • Verify the continuity between PCM terminal 2D and front HO2S terminal 1A. • Is there continuity?	Yes	Replace the front HO2S, then go to the next step.
		No	Repair or replace the wiring harness for an open, then go to the next step.
7	**VERIFY TROUBLESHOOTING OF DTC P2237 COMPLETED** • Make sure to reconnect all disconnected connectors. • Clear the DTC from the PCM memory using the WDS or equivalent. • Perform the HO2S heater, HO2S and TWC Repair Verification Drive Mode. (See01–02B–9 OBD-II DRIVE MODE [L3 WITH TC].) • Is the PENDING CODE same DTC present?	Yes	Replace the PCM, then go to the next step. (See01–40B–6 PCM REMOVAL/INSTALLATION [L3 WITH TC].)
		No	Go to the next step.
8	**VERIFY AFTER REPAIR PROCEDURE** • Perform the "After Repair Procedure". (See01–02B–8 AFTER REPAIR PROCEDURE [L3 WITH TC].) • Are any DTCs present?	Yes	Go to the applicable DTC inspection. (See01–02B–14 DTC TABLE [L3 WITH TC].)
		No	Troubleshooting completed.

DTC P2245 [L3 WITH TC]

E6U010202200W12

DTC P2245	Front HO2S sensor reference voltage circuit low input
DETECTION CONDITION	• The PCM monitors is front HO2S sensor reference voltage circuit voltage. If the voltage below the threshold value while the engine is running, the PCM determines that the front HO2S sensor reference voltage circuit is low. **Diagnostic support note** • This is a continuous monitor. (HO2S) • MIL illuminates if the PCM detects the above malfunctioning condition in two consecutive drive cycles or in one drive cycle while the DTC for the same malfunction has been stored in the PCM. • PENDING CODE is available if the PCM detects the above malfunction conditions during the first drive cycle. • FREEZE FRAME DATA is available. • DTCs are stored in the PCM memory.
POSSIBLE CAUSE	• Front HO2S malfunction • Connector or terminal malfunction • Short to ground circuit between PCM terminal 2M and front HO2S sensor terminal 2C • PCM malfunction

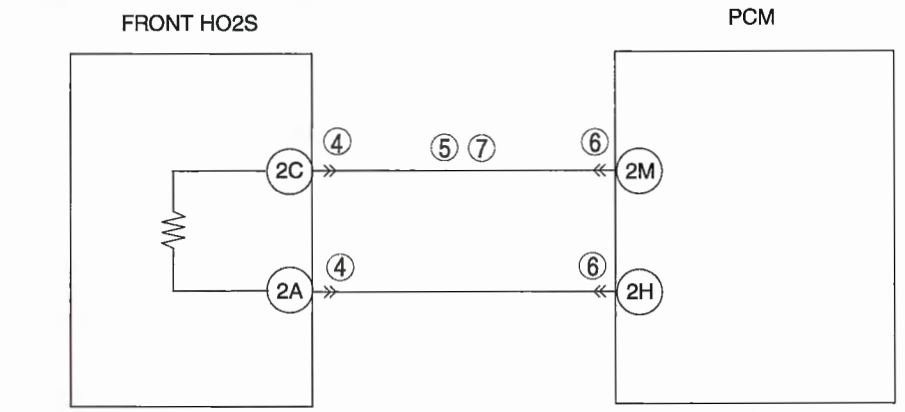

FRONT HO2S
WIRING HARNESS-SIDE CONNECTOR

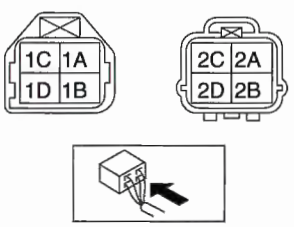

PCM
WIRING HARNESS-SIDE CONNECTOR

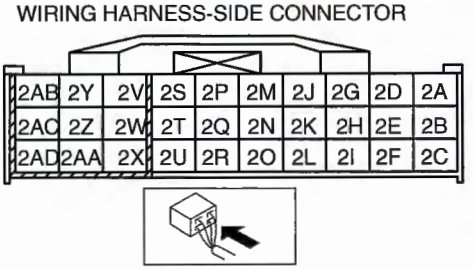

Diagnostic procedure

STEP	INSPECTION		ACTION
1	**VERIFY FREEZE FRAME DATA AND DIAGNOSTIC MONITORING TEST RESULTS HAVE BEEN RECORDED** • Have the FREEZE FRAME DATA and DIAGNOSTIC MONITORING TEST RESULTS (HO2S related) been recorded?	Yes	Go to the next step.
		No	Record the FREEZE FRAME DATA and DIAGNOSTIC MONITORING TEST RESULTS on the repair order, then go to the next step.
2	**VERIFY RELATED REPAIR INFORMATION AVAILABILITY** • Verify related Service Bulletins and/or on-line repair information availability. • Is any related repair information available?	Yes	Perform the repair or diagnosis according to the available repair information. If the vehicle is not repaired, go to the next step.
		No	Go to the next step.
3	**IDENTIFY TRIGGER DTC FOR FREEZE FRAME DATA** • Is DTC P2245 on FREEZE FRAME DATA?	Yes	Go to the next step.
		No	Go to troubleshooting for DTC on FREEZE FRAME DATA. (See01–02B–14 DTC TABLE [L3 WITH TC].)
4	**INSPECT FRONT HO2S CONNECTOR FOR POOR CONNECTION** • Turn the ignition switch to off. • Disconnect the front HO2S connector. • Inspect for poor connection (such as damaged/ pulled-out pins, and corrosion). • Is there any malfunction?	Yes	Repair or replace the terminal, then go to Step 8.
		No	Go to the next step.
5	**INSPECT FRONT HO2S REFERENCE VOLTAGE CIRCUIT FOR SHORT TO GROUND AT FRONT HO2S** • Turn the ignition switch to the off. • Front HO2S connector disconnected. • Inspect the continuity between front HO2S terminal 2C (part-side) and ground. • Is there continuity?	Yes	Replace the front HO2S, then go to Step 8.
		No	Go to the next step.
6	**INSPECT PCM CONNECTOR FOR POOR CONNECTION** • Turn the ignition switch to off. • Disconnect the PCM connector. • Inspect for poor connection (such as damaged/ pulled-out pins, and corrosion). • Is there any malfunction?	Yes	Repair or replace the terminal, then go to Step 8.
		No	Go to the next step.
7	**INSPECT FRONT HO2S REFERENCE VOLTAGE CIRCUIT FOR SHORT TO GROUND AT PCM - FRONT HO2S** • Turn the ignition switch to the off. • Front HO2S and PCM connectors disconnected. • Inspect the continuity between front HO2S terminal 2C (harness-side) and ground. • Is there continuity?	Yes	Repair or replace the wiring harness for a possible short to ground between PCM terminal 2M and front HO2S sensor terminal 2C, then go to the next step.
		No	Go to the next step.
8	**VERIFY TROUBLESHOOTING OF DTC P2245 COMPLETED** • Make sure to reconnect all disconnected connectors. • Clear the DTC from the PCM memory using the WDS or equivalent. • Perform the HO2S heater, HO2S and TWC Repair Verification Drive Mode. (See01–02B–9 OBD-II DRIVE MODE [L3 WITH TC].) • Is the PENDING CODE same DTC present?	Yes	Replace the PCM, then go to the next step. (See 01–40B–6 PCM REMOVAL/INSTALLATION [L3 WITH TC].)
		No	Go to the next step.
9	**VERIFY AFTER REPAIR PROCEDURE** • Perform the "After Repair Procedure". (See01–02B–8 AFTER REPAIR PROCEDURE [L3 WITH TC].) • Are any DTCs present?	Yes	Go to the applicable DTC inspection. (See 01–02B–14 DTC TABLE [L3 WITH TC].)
		No	Troubleshooting completed.

DTC P2246 [L3 WITH TC]

E6U010202200W13

DTC P2246	Front HO2S sensor reference voltage circuit high input
DETECTION CONDITION	• The PCM monitors the front HO2S sensor reference voltage circuit voltage. If the voltage is above the threshold value while the engine is running, the PCM determines that the front HO2S sensor reference voltage circuit is high. **Diagnostic support note** • This is a continuous monitor. (HO2S) • MIL illuminates if the PCM detects the above malfunctioning condition in two consecutive drive cycles or in one drive cycle while the DTC for the same malfunction has been stored in the PCM. • PENDING CODE is available if the PCM detects the above malfunction conditions during the first drive cycle. • FREEZE FRAME DATA is available. • DTCs are stored in the PCM memory.
POSSIBLE CAUSE	• Front HO2S malfunction • Connector or terminal malfunction • Short to the power circuit between PCM terminal 2M and front HO2S terminal 2C • Open circuit between PCM terminal 2M and front HO2S terminal 2C • Open circuit between PCM terminal 2H and front HO2S terminal 2A • PCM malfunction

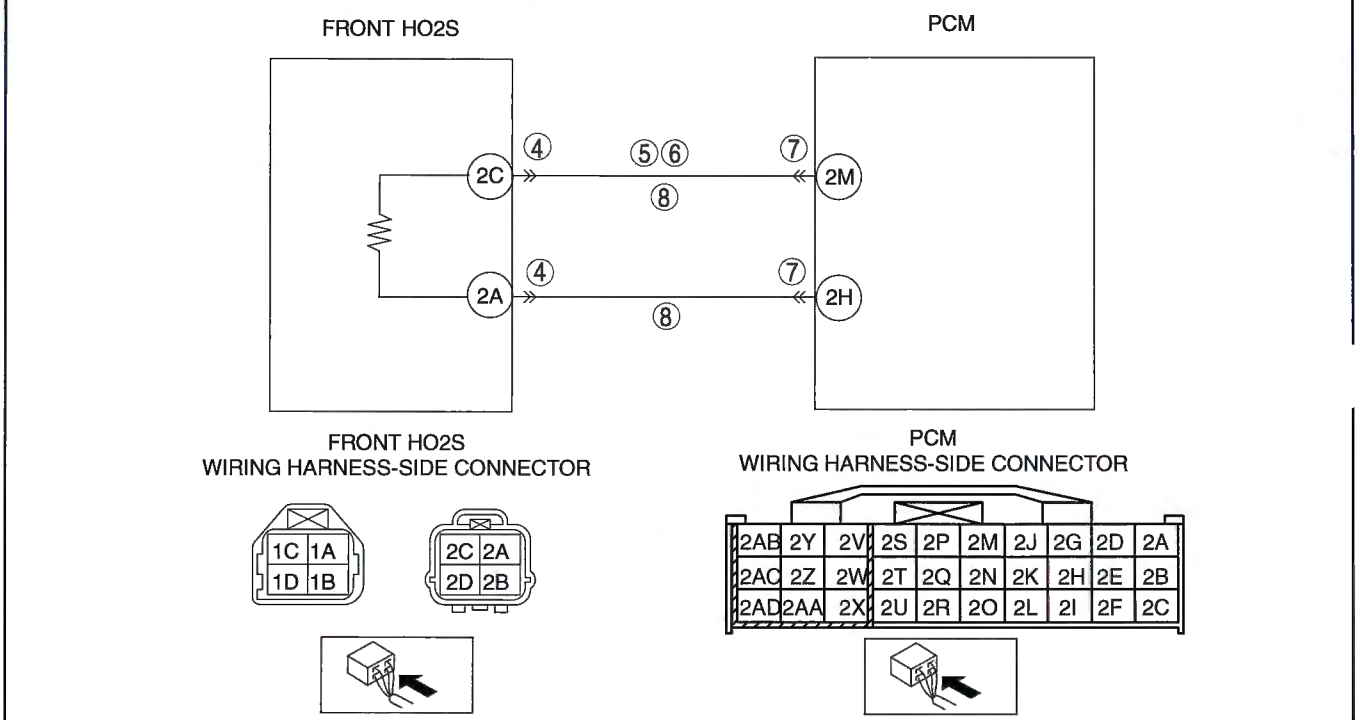

Diagnostic procedure

STEP	INSPECTION		ACTION
1	**VERIFY FREEZE FRAME DATA AND DIAGNOSTIC MONITORING TEST RESULTS HAVE BEEN RECORDED** • Have the FREEZE FRAME DATA and DIAGNOSTIC MONITORING TEST RESULTS (HO2S related) been recorded?	Yes	Go to the next step.
		No	Record the FREEZE FRAME DATA and DIAGNOSTIC MONITORING TEST RESULTS on the repair order, then go to the next step.
2	**VERIFY RELATED REPAIR INFORMATION AVAILABILITY** • Verify related Service Bulletins and/or on-line repair information availability. • Is any related repair information available?	Yes	Perform the repair or diagnosis according to the available repair information. If the vehicle is not repaired, go to the next step.
		No	Go to the next step.
3	**IDENTIFY TRIGGER DTC FOR FREEZE FRAME DATA** • Is DTC P2246 on FREEZE FRAME DATA?	Yes	Go to the next step.
		No	Go to troubleshooting for DTC on FREEZE FRAME DATA. (See01–02B–14 DTC TABLE [L3 WITH TC].)

STEP	INSPECTION		ACTION
4	**INSPECT FRONT HO2S CONNECTOR FOR POOR CONNECTION** • Turn the ignition switch to off. • Disconnect the front HO2S connector. • Inspect for poor connection (such as damaged/ pulled-out pins, and corrosion). • Is there any malfunction?	Yes	Repair or replace the terminal, then go to Step 9.
		No	Go to the next step.
5	**INSPECT FRONT HO2S REFERENCE VOLTAGE CIRCUIT FOR SHORT TO POWER AT FRONT HO2S** • Front HO2S connector disconnected. • Turn the ignition switch to the ON position (engine off). • Measure the voltage between front HO2S terminal 2C (part-side) and ground. • Is the voltage above 5.0 V?	Yes	Replace the front HO2S, then go to Step 9.
		No	Go to the next step.
6	**INSPECT FRONT HO2S REFERENCE VOLTAGE CIRCUIT FOR SHORT TO POWER AT PCM - FRONT HO2S** • Front HO2S connector disconnected. • Turn the ignition switch to the ON position (engine off). • Measure the voltage between front HO2S terminal 2C (harness-side) and ground. • Is the voltage above 5.0 V?	Yes	Repair or replace for a short to power, then go to Step 9.
		No	Go to the next step.
7	**INSPECT PCM CONNECTOR FOR POOR CONNECTION** • Turn the ignition switch to off. • Disconnect the PCM connector. • Inspect for poor connection (such as damaged/ pulled-out pins, and corrosion). • Is there any malfunction?	Yes	Repair or replace the terminal, then go to Step 9.
		No	Go to the next step.
8	**INSPECT FRONT HO2S REFERENCE VOLTAGE CIRCUIT FOR OPEN AT PCM - FRONT HO2S** • Front HO2S and PCM connectors disconnected. • Verify the continuity between following terminals at harness-side connectors. — PCM terminal 2M - front HO2S terminal 2C — PCM terminal 2H - front HO2S terminal 2A • Is there continuity?	Yes	Replace the front HO2S, then go to the next step.
		No	Repair or replace for an open circuit, then go to the next step.
9	**VERIFY TROUBLESHOOTING OF DTC P2246 COMPLETED** • Make sure to reconnect all disconnected connectors. • Clear the DTC from the PCM memory using the WDS or equivalent. • Perform the HO2S heater, HO2S and TWC Repair Verification Drive Mode. (See01–02B–9 OBD-II DRIVE MODE [L3 WITH TC].) • Is the PENDING CODE same DTC present?	Yes	Replace the PCM, then go to the next step. (See 01–40B–6 PCM REMOVAL/INSTALLATION [L3 WITH TC].)
		No	Go to the next step.
10	**VERIFY AFTER REPAIR PROCEDURE** • Perform the "After Repair Procedure". (See01–02B–8 AFTER REPAIR PROCEDURE [L3 WITH TC].) • Are any DTCs present?	Yes	Go to the applicable DTC inspection. (See 01–02B–14 DTC TABLE [L3 WITH TC].)
		No	Troubleshooting completed.

DTC P2251 [L3 WITH TC]

E6U010202200W14

DTC P2251	Front HO2S negative current control circuit open
DETECTION CONDITION	• The PCM monitors the front HO2S negative current control circuit voltage. If the voltage does not change with the PCM control value while the engine is running, the PCM determines that the front HO2S negativ current control circuit is open. **Diagnostic support note** • This is a continuous monitor. (HO2S) • MIL illuminates if the PCM detects the above malfunctioning condition in two consecutive drive cycles or in one drive cycle while the DTC for the same malfunction has been stored in the PCM. • PENDING CODE is available if the PCM detects the above malfunction conditions during the first drive cycle. • FREEZE FRAME DATA is available. • DTCs are stored in the PCM memory.
POSSIBLE CAUSE	• Front HO2S malfunction • Connector or terminal malfunction • Open circuit between PCM terminal 2G and front HO2S terminal 1B • Front HO2S heater cannot be controlled • PCM malfunction

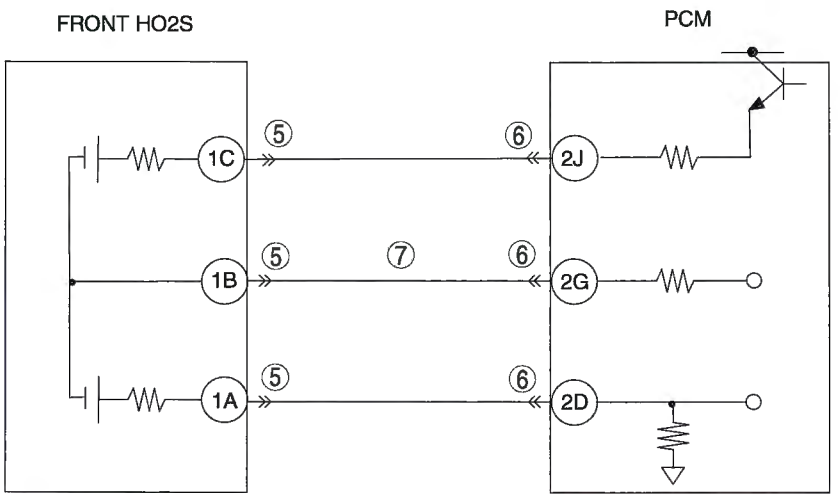

FRONT HO2S
WIRING HARNESS-SIDE CONNECTOR

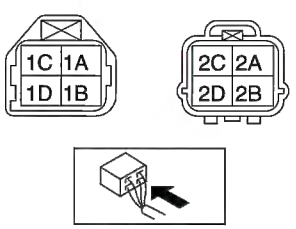

PCM
WIRING HARNESS-SIDE CONNECTOR

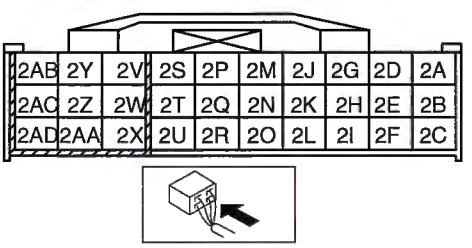

Diagnostic procedure

STEP	INSPECTION		ACTION
1	**VERIFY FREEZE FRAME DATA AND DIAGNOSTIC MONITORING TEST RESULTS HAVE BEEN RECORDED** • Have the FREEZE FRAME DATA and DIAGNOSTIC MONITORING TEST RESULTS (HO2S related) been recorded?	Yes	Go to the next step.
		No	Record the FREEZE FRAME DATA and DIAGNOSTIC MONITORING TEST RESULTS on the repair order, then go to the next step.
2	**VERIFY RELATED REPAIR INFORMATION AVAILABILITY** • Verify related Service Bulletins and/or on-line repair information availability. • Is any related repair information available?	Yes	Perform the repair or diagnosis according to the available repair information. If the vehicle is not repaired, go to the next step.
		No	Go to the next step.
3	**VERIFY RELATED PENDING CODE OR STORED DTC** • Turn the ignition switch to off, then ON position (Engine off). • Verify the related PENDING CODE or stored DTCs using the WDS or equivalent. • Is the DTC P0030, P0031 or P0032 also present?	Yes	Go to appropriate DTC troubleshooting procedure. (See01–02B–14 DTC TABLE [L3 WITH TC].)
		No	Go to the next step.
4	**IDENTIFY TRIGGER DTC FOR FREEZE FRAME DATA** • Is DTC P2251 on FREEZE FRAME DATA?	Yes	Go to the next step.
		No	Go to troubleshooting for DTC on FREEZE FRAME DATA. (See01–02B–14 DTC TABLE [L3 WITH TC].)
5	**INSPECT FRONT HO2S CONNECTOR FOR POOR CONNECTION** • Turn the ignition switch to off. • Disconnect the front HO2S connector. • Inspect for poor connection (such as damaged/ pulled-out pins, and corrosion). • Is there any malfunction?	Yes	Repair or replace the terminal, then go to Step 8.
		No	Go to the next step.
6	**INSPECT PCM CONNECTOR FOR POOR CONNECTION** • Turn the ignition switch to off. • Disconnect the PCM connector. • Inspect for poor connection (such as damaged/ pulled-out pins, and corrosion). • Is there any malfunction?	Yes	Repair or replace the terminal, then go to Step 8.
		No	Go to the next step.
7	**INSPECT FRONT HO2S NEGATIVE CURRENT CONTROL CIRCUIT FOR OPEN AT PCM - FRONT HO2S** • The front HO2S and the PCM connectors disconnected. • Verify the continuity between the PCM terminal 2G and the front HO2S terminal 1B at harness-side connectors. • Is there continuity?	Yes	Replace the front HO2S, then go to the next step.
		No	Repair or replace for open circuit, then go to the next step.
8	**VERIFY TROUBLESHOOTING OF DTC P2251 COMPLETED** • Make sure to reconnect all disconnected connectors. • Clear the DTC from the PCM memory using the WDS or equivalent. • Perform the HO2S heater, HO2S and TWC Repair Verification Drive Mode. (See01–02B–9 OBD-II DRIVE MODE [L3 WITH TC].) • Is the PENDING CODE same DTC present?	Yes	Replace the PCM, then go to the next step. (See01–40B–6 PCM REMOVAL/INSTALLATION [L3 WITH TC].)
		No	Go to the next step.
9	**VERIFY AFTER REPAIR PROCEDURE** • Perform the "After Repair Procedure". (See01–02B–8 AFTER REPAIR PROCEDURE [L3 WITH TC].) • Are any DTCs present?	Yes	Go to the applicable DTC inspection. (See 01–02B–14 DTC TABLE [L3 WITH TC].)
		No	Troubleshooting completed.

DTC P2401 [L3 WITH TC]

E6U010202400W06

DTC P2401	EVAP system leak detection pump motor circuit low
DETECTION CONDITION	• The PCM monitors the pump load current (EVAP line pressure), while the EVAP leak monitor is operating. If the pump load current is lower than specified, the PCM determines that the EVAP system leak detection pump motor circuit has a malfunction. **Diagnostic support note** • This is a intermittent monitor (CCM). • MIL illuminates if the PCM detects the above malfunction condition in two consecutive drive cycles or in one drive cycle while the DTC for the same malfunction has been stored in the PCM. • PENDING CODE is available if the PCM detects the above malfunction condition during the first drive cycle. • FREEZE FRAME DATA is available. • DTCs are stored in PCM memory.
POSSIBLE CAUSE	• EVAP system leak detection pump malfunction • Open circuit between main relay and EVAP system leak detection pump terminal A • Open circuit between EVAP system leak detection pump terminal D and PCM terminal 3Y • Short to ground circuit between EVAP system leak detection pump terminal D and PCM terminal 3Y • Poor connection at the EVAP system leak detection pump or the PCM connector • PCM malfunction

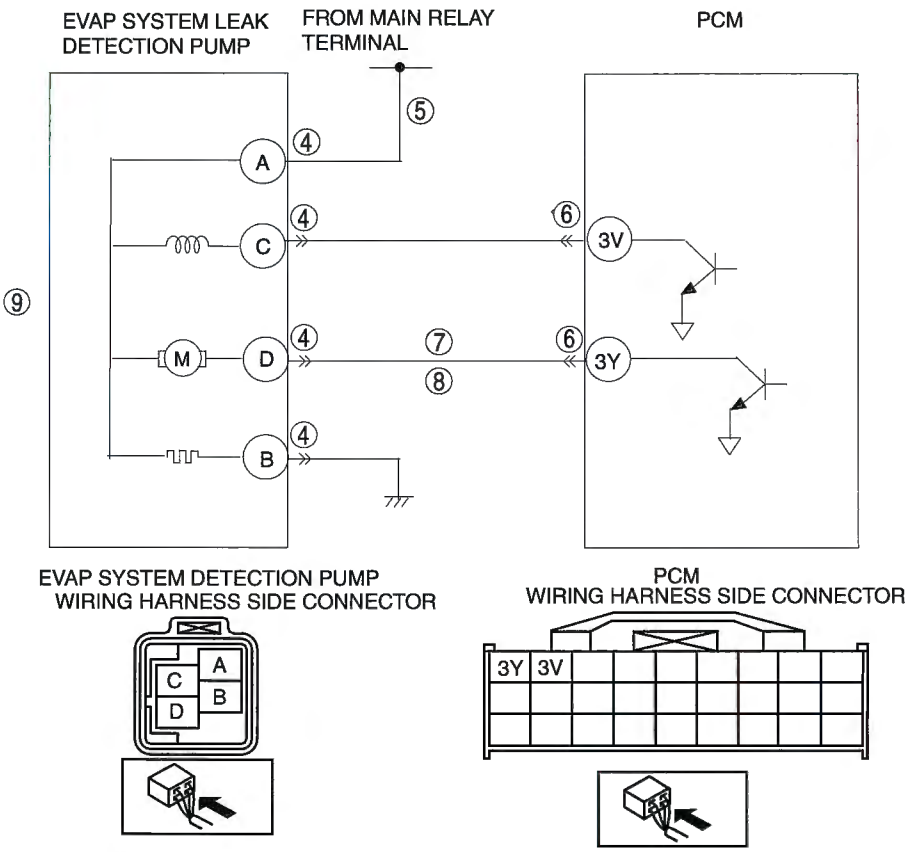

Diagnostic procedure

STEP	INSPECTION		ACTION
1	**VERIFY FREEZE FRAME DATA HAS BEEN RECORDED** • Has the FREEZE FRAME DATA been recorded?	Yes	Go to the next step.
		No	Record FREEZE FRAME DATA on the repair order, then go to the next step.
2	**VERIFY RELATED REPAIR INFORMATION AVAILABILITY** • Check for related Service Bulletins and/or on-line repair information availability. • Is any related repair information available?	Yes	Perform the repair or diagnosis according to the available repair information. • If the vehicle is not repaired, go to the next step.
		No	Go to the next step.
3	**VERIFY RELATED PENDING CODE OR STORED DTC** • Turn the ignition switch to the OFF then ON position (Engine off). • Verify related PENDING CODE or stored DTC. • Is DTC P2405 present?	Yes	Go to appropriate DTC inspection. (See 01–02B–264 DTC P2405 [L3 WITH TC].)
		No	Go to the next step.
4	**INSPECT EVAP SYSTEM LEAK DETECTION PUMP CONNECTOR FOR POOR CONNECTION** • Turn the ignition switch off. • Disconnect EVAP system leak detection pump connector. • Inspect for poor connection (such as damaged/ pulled-out pins, corrosion). • Is there any malfunction?	Yes	Repair or replace the terminal, then go to Step 10.
		No	Go to the next step.
5	**INSPECT EVAP SYSTEM LEAK DETECTION PUMP MOTOR CIRCUIT FOR OPEN CIRCUIT** • Disconnect the main relay. • Inspect continuity between EVAP system leak detection pump terminal A (harness-side) and main relay. • Is there continuity?	Yes	Go to the next step.
		No	Repair or replace the wiring harness for an open circuit, then go to Step 10.
6	**INSPECT PCM CONNECTOR FOR POOR CONNECTION** • Turn the ignition switch off. • Disconnect the PCM connector. • Inspect for poor connection (such as damaged/ pulled-out pins, corrosion). • Is there any malfunction?	Yes	Repair the terminal, then go to Step 10.
		No	Go to the next step.
7	**INSPECT EVAP SYSTEM LEAK DETECTION PUMP MOTOR CIRCUIT FOR SHORT TO GROUND** • Inspect for continuity between EVAP system leak detection pump terminal D (harness-side) and body ground. • Is there continuity?	Yes	Repair or replace the wiring harness for a short to ground, then go to Step 10.
		No	Go to the next step.
8	**INSPECT EVAP SYSTEM LEAK DETECTION PUMP MOTOR CIRCUIT FOR OPEN CIRCUIT** • Inspect continuity between EVAP system leak detection pump terminal D (harness-side) and PCM terminal 3Y (harness-side). • Is there continuity?	Yes	Go to the next step.
		No	Repair or replace the wiring harness for an open circuit, then go to Step 10.
9	**INSPECT EVAP SYSTEM LEAK DETECTION PUMP** • Perform the EVAP system leak detection pump inspection. (See 01–16B–8 EVAPORATIVE EMISSION (EVAP) SYSTEM LEAK DETECTION PUMP INSPECTION [L3 WITH TC].) • Is the EVAP system leak detection pump normal?	Yes	Go to the next step.
		No	Replace the EVAP system leak detection pump, then go to the next step.

STEP	INSPECTION		ACTION
10	**VERIFY TROUBLESHOOTING OF DTC P2401 COMPLETED** • Make sure to reconnect all disconnected connectors. • Clear the DTC from the PCM memory using the WDS or equivalent. • Perform the EVAP system test using the WDS or equivalent. (See 01–03B–94 Evaporative Emission (EVAP) System Leak Inspection.) • Is the same DTC present? **Note** • If EVAP system test function is not available, take following procedure. — Start the engine and perform the "EVAP System Repair Verification Drive Mode". (See 01–02B–9 OBD-II DRIVE MODE [L3 WITH TC].) — Is the PENDING CODE for this DTC present?	Yes	Replace the PCM, then go to the next step.
		No	Go to the next step.
11	**VERIFY AFTER REPAIR PROCEDURE** • Perform the "After Repair Procedure". (See 01–02B–8 AFTER REPAIR PROCEDURE [L3 WITH TC].) • Are any DTCs present?	Yes	Go to the applicable DTC inspection. (See 01–02B–14 DTC TABLE [L3 WITH TC].)
		No	Troubleshooting completed.

DTC P2402 [L3 WITH TC]

E6U010202400W07

DTC P2402	EVAP system leak detection pump motor circuit high
DETECTION CONDITION	• The PCM monitors the pump load current (EVAP line pressure), while the EVAP leak monitor is operating. If the pump load current is higher than specified, the PCM determines that the EVAP system leak detection pump motor circuit has a malfunction. **Diagnostic support note** • This is a intermittent monitor (CCM). • MIL illuminates if the PCM detects the above malfunction condition in two consecutive drive cycles or in one drive cycle while the DTC for the same malfunction has been stored in the PCM. • PENDING CODE is available if the PCM detects the above malfunction condition during the first drive cycle. • FREEZE FRAME DATA is available. • DTCs are stored in PCM memory.
POSSIBLE CAUSE	• EVAP system leak detection pump malfunction • Short to the power supply between the EVAP system leak detection pump terminal D and PCM terminal 3Y • PCM malfunction

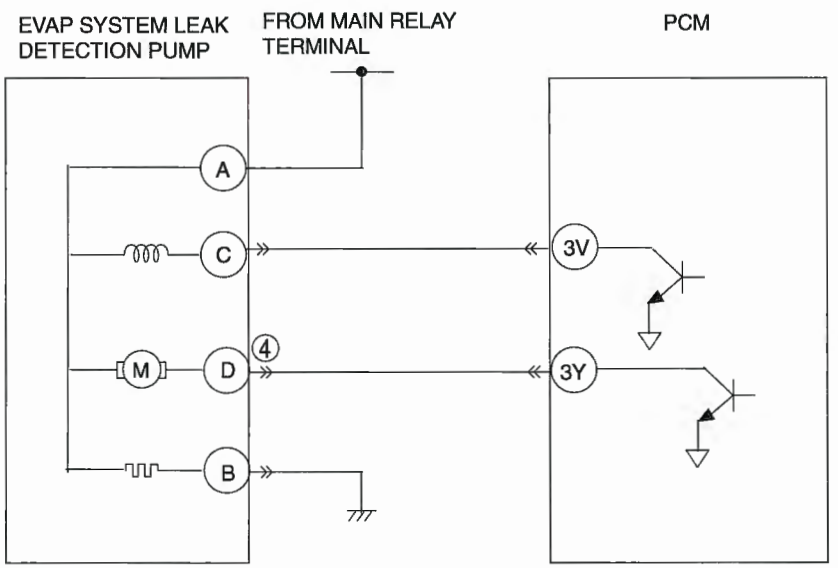



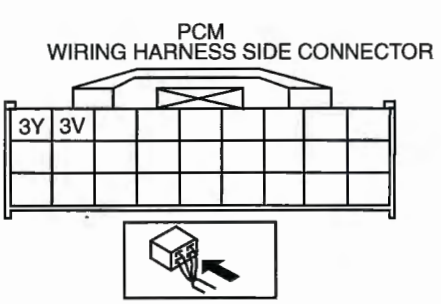

Diagnostic procedure

STEP	INSPECTION		ACTION
1	**VERIFY FREEZE FRAME DATA HAS BEEN RECORDED** • Has the FREEZE FRAME DATA been recorded?	Yes	Go to the next step.
		No	Record FREEZE FRAME DATA on the repair order, then g to the next step.
2	**VERIFY RELATED REPAIR INFORMATION AVAILABILITY** • Check for related Service Bulletins and/or on-line repair information availability. • Is any related repair information available?	Yes	Perform the repair or diagnostic according to the available repair information. • If the vehicle is not repaired, then go to the next step.
		No	Go to the next step.
3	**VERIFY RELATED PENDING CODE OR STORED DTCS** • Turn the ignition switch to the OFF then ON position (Engine off). • Verify related pending code or stored DTCs. • Are other DTCs present?	Yes	Go to the appropriate DTC inspection. (See 01–02B–14 DTC TABLE [L3 WITH TC].)
		No	Go to the next step.
4	**CHECK EVAP SYSTEM LEAK DETECTION PUMP CIRCUIT FOR SHORT TO POWER SUPPLY** • Turn the ignition switch to the ON position. • Disconnect the EVAP system leak detection pump connector. • Measure the voltage between EVAP system leak detection pump terminal D (harness-side) and body ground. • Is the voltage **B+**?	Yes	Repair or replace the wiring harness, then go to the next step.
		No	Go to the next step.
5	**VERIFY TROUBLESHOOTING OF DTC P2402 COMPLETED** • Make sure to reconnect all disconnected connectors. • Clear the DTC from the PCM memory using the WDS or equivalent. • Perform the EVAP system test using the WDS or equivalent. (See 01–03B–94 Evaporative Emission (EVAP) System Leak Inspection.) • Is the same DTC present? **Note** • If EVAP system test function is not available, take following procedure. — Start the engine and perform the "EVAP System Repair Verification Drive Mode". (See 01–02B–9 OBD-II DRIVE MODE [L3 WITH TC].) — Is the PENDING CODE for this DTC present?	Yes	Replace the PCM, then go to the next step.
		No	Go to the next step.
6	**VERIFY AFTER REPAIR PROCEDURE** • Perform the "After Repair Procedure". (See 01–02B–8 AFTER REPAIR PROCEDURE [L3 WITH TC].) • Are any DTCs present?	Yes	Go to the applicable DTC inspection. (See 01–02B–14 DTC TABLE [L3 WITH TC].)
		No	Troubleshooting completed.

DTC P2404 [L3 WITH TC]

E6U010202400W08

DTC P2404	EVAP system leak detection pump sensor circuit malfunction
DETECTION CONDITION	• The PCM monitors the pump load current (EVAP line pressure), while the EVAP leak monitor is operating. After obtaining the reference current value, If the pump load current is greater than or equal to the reference current value plus **2 mA** within the specified time, the PCM determines that the air filter has a malfunction. **Diagnostic support note** • This is a intermittent monitor (CCM). • MIL illuminates if the PCM detects the above malfunction condition in two consecutive drive cycles or in one drive cycle while the DTC for the same malfunction has been stored in the PCM. • PENDING CODE is available if the PCM detects the above malfunction condition during the first drive cycle. • FREEZE FRAME DATA is available. • DTCs are stored in PCM memory.
POSSIBLE CAUSE	• Air filter clogging • EVAP hose bending • Damaged PCM

Diagnostic procedure

STEP	INSPECTION		ACTION
1	**VERIFY FREEZE FRAME DATA HAS BEEN RECORDED** • Has the FREEZE FRAME DATA been recorded?	Yes	Go to the next step.
		No	Record FREEZE FRAME DATA on the repair order, then go to the next step.
2	**VERIFY RELATED REPAIR INFORMATION AVAILABILITY** • Check for related Service Bulletins and/or on-line repair information availability. • Is any related repair information available?	Yes	Perform the repair or diagnostic according to the available repair information. • If the vehicle is not repaired, then go to the next step.
		No	Go to the next step.
3	**CHECK EVAP HOSE BENDING** • Inspect the EVAP hose for bending. • Is the EVAP hose normal?	Yes	Go to the next step.
		No	Repair or replace the suspected hose, then go to Step 5.
4	**CHECK AIR FILTER FOR CLOGGING** • Inspect the air filter for clogging. • Is the air filter normal?	Yes	Go to the next step.
		No	Replace the air filter, then go to the next step.
5	**VERIFY TROUBLESHOOTING OF DTC P2404 COMPLETED** • Make sure to reconnect all disconnected connectors. • Clear the DTC from the PCM memory using the WDS or equivalent. • Perform the EVAP system test using the WDS or equivalent. (See 01–03B–94 Evaporative Emission (EVAP) System Leak Inspection.) • Is the same DTC present? **Note** • If EVAP system test function is not available, take following procedure. — Perform the "EVAP System Repair Verification Drive Mode". (See 01–02B–9 OBD-II DRIVE MODE [L3 WITH TC].) — Is the PENDING CODE for this DTC present?	Yes	Replace the PCM, then go to the next step.
		No	Go to the next step.
6	**VERIFY AFTER REPAIR PROCEDURE** • Perform the "After Repair Procedure". (See 01–02B–8 AFTER REPAIR PROCEDURE [L3 WITH TC].) • Are any DTCs present?	Yes	Go to the applicable DTC inspection. (See 01–02B–14 DTC TABLE [L3 WITH TC].)
		No	Troubleshooting completed.

DTC P2405 [L3 WITH TC]

E6U010202400W09

DTC P2405	EVAP system leak detection pump sensor circuit low input
DETECTION CONDITION	• The PCM monitors the pump load current (EVAP line pressure), while the EVAP leak monitor is operating. If the current is lower than the specification while the PCM obtains the reference current value, the PCM determines that the EVAP system leak detection pump orifice has a malfunction. **Diagnostic support note** • This is a intermittent monitor (CCM). • MIL illuminates if the PCM detects the above malfunction condition in two consecutive drive cycles or in one drive cycle while the DTC for the same malfunction has been stored in the PCM. • PENDING CODE is available if the PCM detects the above malfunction condition during the first drive cycle. • FREEZE FRAME DATA is available. • DTCs are stored in PCM memory.
POSSIBLE CAUSE	• EVAP system leak detection pump orifice has fallen off • EVAP system leak detection pump motor malfunction • PCM malfunction

Diagnostic procedure

STEP	INSPECTION		ACTION
1	**VERIFY FREEZE FRAME DATA HAS BEEN RECORDED** • Has the FREEZE FRAME DATA been recorded?	Yes	Go to the next step.
		No	Record FREEZE FRAME DATA on the repair order, then go to the next step.
2	**VERIFY RELATED REPAIR INFORMATION AVAILABILITY** • Check for related Service Bulletins and/or on-line repair information availability. • Is any related repair information available?	Yes	Perform the repair or diagnosis according to the available repair information. • If the vehicle is not repaired, go to the next step.
		No	Replace the EVAP system leak detection pump, then go to the next step.
3	**VERIFY TROUBLESHOOTING OF DTC P2405 COMPLETED** • Make sure to reconnect all disconnected connectors. • Clear the DTC from the PCM memory using the WDS or equivalent. • Perform the EVAP system test using the WDS or equivalent. (See 01–03B–94 Evaporative Emission (EVAP) System Leak Inspection.) • Is the same DTC present? **Note** • If EVAP system test function is not available, take following procedure. — Start the engine and perform the "EVAP System Repair Verification Drive Mode". (See 01–02B–9 OBD-II DRIVE MODE [L3 WITH TC].) — Is the PENDING CODE for this DTC present?	Yes	Replace the PCM, then go to the next step.
		No	Go to the next step.
4	**VERIFY AFTER REPAIR PROCEDURE** • Perform the "After Repair Procedure". (See 01–02B–8 AFTER REPAIR PROCEDURE [L3 WITH TC].) • Are any DTCs present?	Yes	Go to the applicable DTC inspection. (See 01–02B–14 DTC TABLE [L3 WITH TC].)
		No	Troubleshooting completed.

DTC P2407 [L3 WITH TC]

E6U010202400W10

DTC P2407	EVAP system leak detection pump sensor circuit intermittent
DETECTION CONDITION	• The PCM monitors pump the load current (EVAP line pressure), while the EVAP leak monitor is operating. When either of the following is detected **6 times or more** successively, the PCM determines that the EVAP system leak detection pump heater has a malfunction: — While obtaining the reference current value, the change in pump load current exceeds the specification. — After obtaining the reference current value, the pump load current is kept lower than the maximum pump load current for more than the specified time. **Diagnostic support note** • This is a intermittent monitor (CCM). • MIL illuminates if the PCM detects the above malfunction condition in two consecutive drive cycles or in one drive cycle while the DTC for the same malfunction has been stored in the PCM. • PENDING CODE is available if the PCM detects the above malfunction condition during the first drive cycle. • FREEZE FRAME DATA is available. • DTCs are stored in PCM memory.
POSSIBLE CAUSE	• EVAP system leak detection pump heater malfunction • PCM malfunction

Diagnostic procedure

STEP	INSPECTION		ACTION
1	**VERIFY FREEZE FRAME DATA HAS BEEN RECORDED** • Has the FREEZE FRAME DATA been recorded?	Yes	Go to the next step.
		No	Record FREEZE FRAME DATA on the repair order, then go to the next step.
2	**VERIFY RELATED REPAIR INFORMATION AVAILABILITY** • Check for related Service Bulletins and/or on-line repair information availability. • Is any related repair information available?	Yes	Perform the repair or diagnosis according to the available repair information. • If the vehicle is not repaired, go to the next step.
		No	Go to the next step.
3	**INSPECT EVAP SYSTEM LEAK DETECTION PUMP HEATER** • Perform the EVAP system leak detection pump inspection. (See 01–16B–8 EVAPORATIVE EMISSION (EVAP) SYSTEM LEAK DETECTION PUMP INSPECTION [L3 WITH TC]) • Is the EVAP system leak detection pump normal?	Yes	Replace the EVAP system leak detection pump, then go to the next step.
		No	Go to the next step.
4	**VERIFY TROUBLESHOOTING OF DTC P2407 COMPLETED** • Make sure to reconnect all disconnected connectors. • Clear the DTC from the PCM memory using the WDS or equivalent. • Perform the EVAP system test using the WDS or equivalent. (See 01–03B–94 Evaporative Emission (EVAP) System Leak Inspection.) • Is the same DTC present? **Note** • If EVAP system test function is not available, take following procedure. — Start the engine and perform the "EVAP System Repair Verification Drive Mode". (See 01–02B–9 OBD-II DRIVE MODE [L3 WITH TC].) — Is the PENDING CODE for this DTC present?	Yes	Replace the PCM, then go to the next step.
		No	Go to the next step.
5	**VERIFY AFTER REPAIR PROCEDURE** • Perform the "AFTER REPAIR PROCEDURE". (See 01–02B–8 AFTER REPAIR PROCEDURE [L3 WITH TC].) • Are any DTCs present?	Yes	Go to the applicable DTC inspection. (See 01–02B–14 DTC TABLE [L3 WITH TC].)
		No	Troubleshooting completed.

DTC P2502 [L3 WITH TC]

E6U010202500W06

DTC P2502	Charging system voltage problem
DETECTION CONDITION	• PCM determines that the generator output voltage is **above 17 V** or the battery voltage is **below 11 V** while the engine is running. **Diagnostic support note** • This is a continuous monitor (Other). • The MIL does not illuminate. • FREEZE FRAME DATA is not available. • DTCs are stored in the PCM memory.
POSSIBLE CAUSE	• Open circuit between generator terminal B and battery positive terminal • Battery malfunction • Generator malfunction • PCM is poorly connected • PCM, generator and/or battery are poorly connected

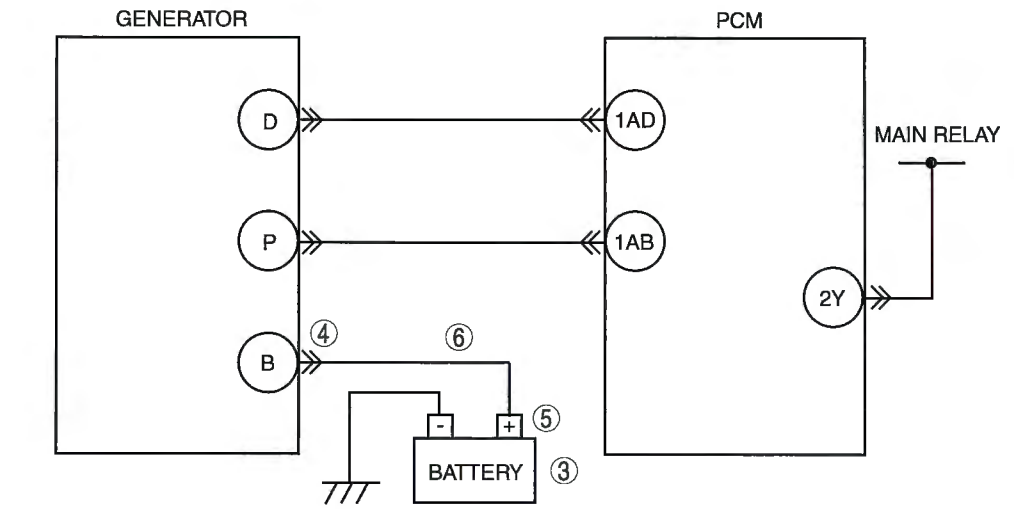

GENERATOR
WIRING HARNESS-SIDE CONNECTOR

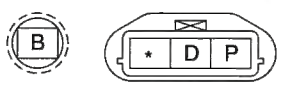

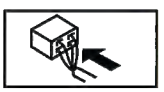

PCM
WIRING HARNESS-SIDE CONNECTOR

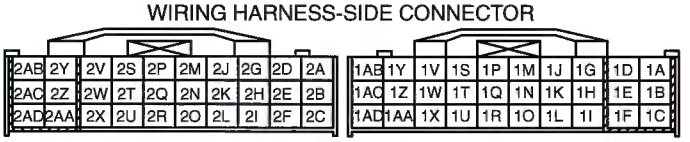

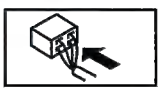

Diagnostic procedure

STEP	INSPECTION		ACTION
1	**VERIFY FREEZE FRAME DATA HAS BEEN RECORDED** • Has the FREEZE FRAME DATA been recorded?	Yes	Go to the next step.
		No	Record the FREEZE FRAME DATA on the repair order, then go to the next step.
2	**VERIFY RELATED REPAIR INFORMATION AVAILABILITY** • Verify related service Bulletins and/or on-line repair information availability. • Is any related repair information available?	Yes	Perform the repair or diagnosis according to the available repair information. • If the vehicle is not repaired, go to the next step.
		No	Go to the next step.
3	**INSPECT BATTERY** • Turn the ignition switch off. • Inspect the battery. • Is the battery normal?	Yes	Go to the next step.
		No	Replace the battery, then go to Step 7.
4	**INSPECT POOR INSTALLATION OF GENERATOR TERMINAL** • Turn the ignition switch to off. • Inspect for looseness of generator terminal B installation nut. • Is the nut loose?	Yes	Tighten the generator terminal B installation nut, then go to Step 7.
		No	Go to the next step.
5	**INSPECT POOR INSTALLATION OF BATTERY POSITIVE TERMINAL** • Inspect for looseness of battery positive terminal. • Is the terminal loose?	Yes	Connect the battery positive terminal correctly, then go to Step 7.
		No	Go to the next step.
6	**INSPECT BATTERY CHARGING CIRCUIT** • Disconnect the generator terminal B. • Measure the voltage between generator terminal B (wiring harness-side) and body ground. • Is the voltage **B+**?	Yes	Go to the next step.
		No	Repair or replace the wiring harness between generator terminal B and battery positive terminal, then go to the next step.
7	**VERIFY TROUBLESHOOTING OF DTC P2502 COMPLETED** • Make sure to reconnect all connectors. • Clear the DTC from the PCM memory using the WDS or equivalent. • Start the engine. • Is the same DTC present?	Yes	Replace the PCM, then go to the next step. (See 01–40B–6 PCM REMOVAL/INSTALLATION [L3 WITH TC].)
		No	Go to the next step.
8	**VERIFY AFTER REPAIR PROCEDURE** • Perform the "AFTER REPAIR PROCEDURE". (See 01–02B–8 AFTER REPAIR PROCEDURE [L3 WITH TC].) • Are any DTCs present?	Yes	Go to the applicable DTC inspection. (See 01–02B–14 DTC TABLE [L3 WITH TC].)
		No	Troubleshooting completed.

DTC P2503 [L3 WITH TC]

E6U010202500W07

DTC P2503	Charging system voltage low
DETECTION CONDITION	• PCM needs **more than 20 A** from the generator, and determines that generator output voltage is **below 8.5 V** while the engine is running. **Diagnostic support note** • This is a continuous monitor (Other). • The MIL does not illuminate. • FREEZE FRAME DATA is not available. • DTCs are stored in the PCM memory.
POSSIBLE CAUSE	• Generator malfunction • PCM and/or generator are poorly connected • Open and/or short to ground in the wiring harness from between generator terminal P and PCM terminal 1AB • Open and/or short to ground in the wiring harness from between generator terminal D and PCM terminal 1AD • Drive chain misadjustment

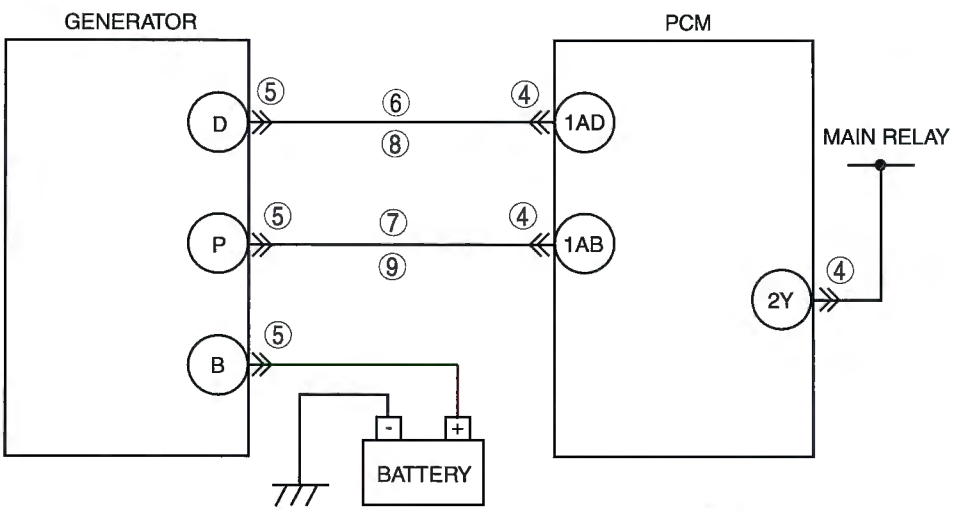

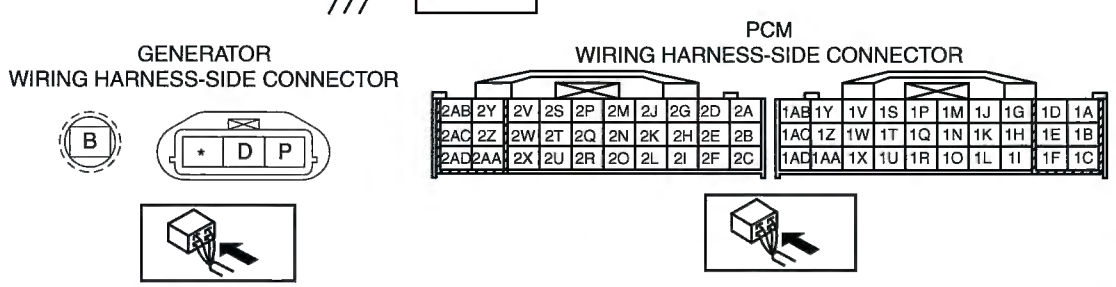

Diagnostic procedure

STEP	INSPECTION		ACTION
1	**VERIFY FREEZE FRAME DATA HAS BEEN RECORDED** • Has the FREEZE FRAME DATA been recorded?	Yes	Go to the next step.
		No	Record the FREEZE FRAME DATA on the repair order, then go to the next step.
2	**VERIFY RELATED REPAIR INFORMATION AVAILABILITY** • Verify related service Bulletins and/or on-line repair information availability. • Is any related repair information available?	Yes	Perform the repair or diagnosis according to the available repair information. • If the vehicle is not repaired, go to the next step.
		No	Go to the next step.
3	**INSPECT DRIVE CHAIN CONDITION** • Verify that the drive chain auto tensioner indicator mark does not exceed limit. • Is the front drive chain normal?	Yes	Go to the next step.
		No	Replace the and/or adjust drive chain, then go to Step 10.
4	**INSPECT PCM CONNECTOR FOR POOR CONNECTION** • Turn the ignition switch off. • Disconnect the PCM connector. • Inspect for poor connection (damaged, pulled-out terminals, corrosion, etc.). • Is there any malfunction?	Yes	Repair the terminals, then go to Step 10.
		No	Go to the next step.
5	**INSPECT GENERATOR CONNECTOR FOR POOR CONNECTION** • Disconnect the generator connector. • Inspect for poor connection (damaged, pulled-out terminals, corrosion, etc.). • Is there any malfunction?	Yes	Repair or replace the terminals, then go to Step 10.
		No	Go to the next step.
6	**INSPECT GENERATOR CONTROL CIRCUIT FOR SHORT TO GROUND** • Inspect for continuity between generator terminal D (wiring harness-side) and body ground. • Is there continuity?	Yes	Repair or replace the wiring harness for a short to ground, then go to Step 10.
		No	Go to the next step.
7	**INSPECT GENERATOR OUTPUT VOLTAGE MONITOR CIRCUIT FOR SHORT TO GROUND** • Inspect for continuity between generator terminal P (wiring harness-side) and body ground. • Is there continuity?	Yes	Repair or replace the wiring harness for a short to ground, then go to Step 10.
		No	Go to the next step.
8	**INSPECT GENERATOR CONTROL CIRCUIT FOR OPEN** • Inspect for continuity between generator terminal D (wiring harness-side) and PCM terminal 1AD (wiring harness-side). • Is there continuity?	Yes	Go to the next step.
		No	Repair or replace the wiring harness for an open circuit, then go to Step 10.
9	**INSPECT GENERATOR OUTPUT VOLTAGE MONITOR CIRCUIT FOR OPEN CIRCUIT** • Inspect for continuity between generator terminal P (wiring harness-side) and PCM terminal 1AB (wiring harness-side). • Is there continuity?	Yes	Repair or replace the generator, then go to the next step.
		No	Repair or replace the wiring harness for an open circuit, then go to the next step.
10	**VERIFY TROUBLESHOOTING OF DTC P2503 COMPLETED** • Make sure to reconnect all connectors. • Clear the DTC from the PCM memory using the WDS or equivalent. • Start the engine. • Is the same DTC present?	Yes	Replace the PCM, then go to the next step. (See 01–40B–6 PCM REMOVAL/INSTALLATION [L3 WITH TC].)
		No	Go to the next step.
11	**VERIFY AFTER REPAIR PROCEDURE** • Perform the "AFTER REPAIR PROCEDURE". (See 01–02B–8 AFTER REPAIR PROCEDURE [L3 WITH TC].) • Are any DTCs present?	Yes	Go to the applicable DTC inspection. (See 01–02B–14 DTC TABLE [L3 WITH TC].)
		No	Troubleshooting completed.

DTC P2504 [L3 WITH TC]

E6U010202500W08

DTC P2504	Charging system voltage high
DETECTION CONDITION	• PCM determines that the generator output voltage is **above 18.5 V** or the battery voltage is **above 16.0 V** while the engine is running. **Diagnostic support note** • This is a continuous monitor (Other). • The MIL does not illuminate. • FREEZE FRAME DATA is not available. • DTCs are stored in the PCM memory.
POSSIBLE CAUSE	• Short to the power circuit between generator connector terminal D and PCM connector terminal 1AD • Generator malfunction • PCM and/or generator are poorly connected

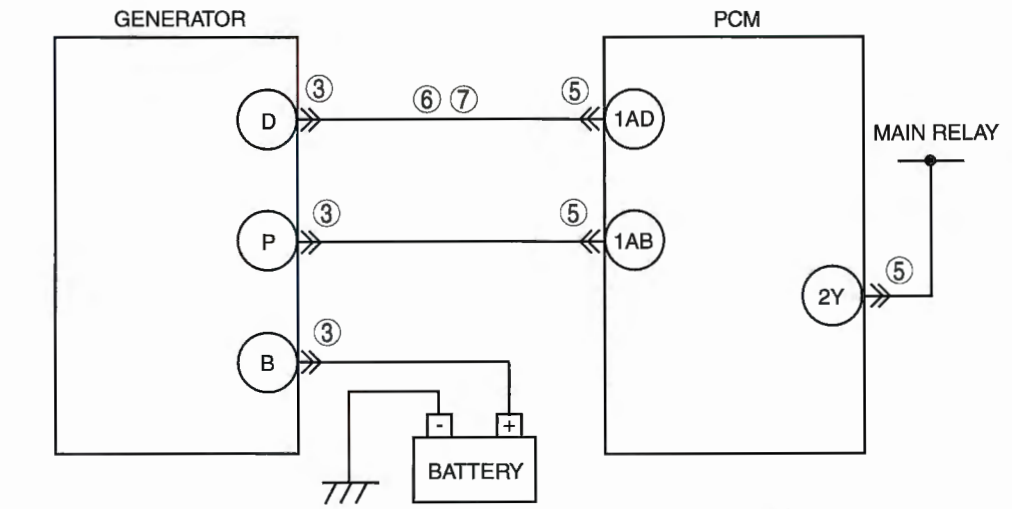

GENERATOR WIRING HARNESS-SIDE CONNECTOR

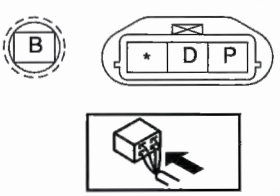

PCM WIRING HARNESS-SIDE CONNECTOR

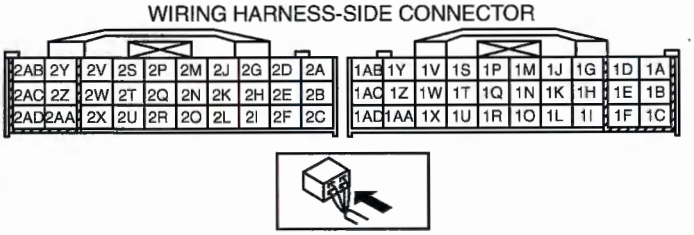

Diagnostic procedure

STEP	INSPECTION		ACTION
1	**VERIFY FREEZE FRAME DATA HAS BEEN RECORDED** • Has the FREEZE FRAME DATA been recorded?	Yes	Go to the next step.
		No	Record the FREEZE FRAME DATA on the repair order, then go to the next step.
2	**VERIFY RELATED REPAIR INFORMATION AVAILABILITY** • Verify related service Bulletins and/or on-line repair information availability. • Is any related repair information available?	Yes	Perform the repair or diagnosis according to the available repair information. • If the vehicle is not repaired, go to the next step.
		No	Go to the next step.
3	**INSPECT GENERATOR CONNECTOR FOR POOR CONNECTION** • Turn the ignition switch off. • Disconnect the generator connector. • Inspect for poor connection (damaged/pulled-out terminals, corrosion, etc.). • Is there any malfunction?	Yes	Repair or replace the terminals, then go to Step 8.
		No	Go to the next step.
4	**CLASSIFY GENERATOR MALFUNCTION OR OTHER MALFUNCTION** • Turn the ignition switch to the ON (Engine off). • Measure the voltage between generator terminal D (wiring harness-side) and body ground. • Is the voltage **B+**?	Yes	Go to the next step.
		No	There is a malfunction at the generator. Go to Step 7.
5	**INSPECT PCM CONNECTOR FOR POOR CONNECTION** • Turn the ignition switch off. • Disconnect the PCM connector. • Inspect for poor connection (damaged/pulled-out terminals, corrosion, etc.). • Is there any malfunction?	Yes	Repair or replace the pins, then go to Step 8.
		No	Go to the next step.
6	**INSPECT GENERATOR CONTROL CIRCUIT FOR SHORT TO POWER** • Turn the ignition switch to the ON position (engine off). • Measure the voltage between generator terminal D (wiring harness-side) and body ground. • Is the voltage **B+**?	Yes	Repair or replace the wiring harness for a short to power supply, then go to Step 8.
		No	Go to Step 8.
7	**INSPECT GENERATOR CONTROL TERMINAL FOR SHORT TO POWER** • Measure the voltage between generator terminal D (part-side) and body ground. • Is the voltage **B+**?	Yes	Repair or replace the generator, then go to the next step.
		No	Go to the next step.
8	**VERIFY TROUBLESHOOTING OF DTC P2504 COMPLETED** • Make sure to reconnect all connectors. • Clear the DTC from the PCM memory using the WDS or equivalent. • Perform the KOER self-test. • Start the engine. • Is the same DTC present?	Yes	Replace the PCM, then go to the next step. (See 01–40B–6 PCM REMOVAL/INSTALLATION [L3 WITH TC].)
		No	Go to the next step.
9	**VERIFY AFTER REPAIR PROCEDURE** • Perform the "AFTER REPAIR PROCEDURE". (See 01–02B–8 AFTER REPAIR PROCEDURE [L3 WITH TC].) • Ares any DTCs present?	Yes	Go to the applicable DTC inspection. (See 01–02B–14 DTC TABLE [L3 WITH TC].)
		No	Troubleshooting completed.

DTC P2507 [L3 WITH TC]

E6U010202500W09

DTC P2507	PCM +BB (back-up battery) voltage low
DETECTION CONDITION	• The PCM monitors the voltage of the back-up battery positive terminal. If the PCM detects that the battery positive terminal voltage is **below 2.5 V** for **2 s**, the PCM determines that the backup voltage circuit has a malfunction. **Diagnostic support note** • This is a continuous monitor (CCM). • MIL illuminates if the PCM detects the above malfunction condition during the first drive cycle. • FREEZE FRAME DATA is available. • DTCs are stored in the PCM memory.
POSSIBLE CAUSE	• Melt down EEC fuse • Open circuit in the wiring harness between the EEC fuse and PCM terminal 2Z • Short to ground between the EEC fuse and PCM terminal 2Z • Poor connection of the PCM connector. • PCM malfunction

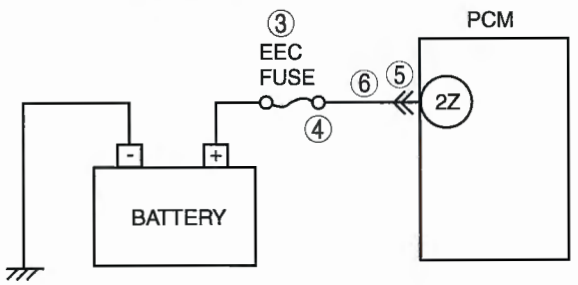

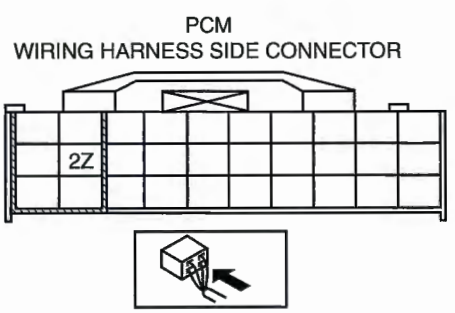

Diagnostic procedure

STEP	INSPECTION		ACTION
1	**VERIFY FREEZE FRAME DATA HAS BEEN RECORDED** • Has the FREEZE FRAME DATA been recorded?	Yes	Go to the next step.
		No	Record FREEZE FRAME DATA on the repair order, then go to the next step.
2	**VERIFY RELATED REPAIR INFORMATION AVAILABILITY** • Check for related Service Bulletins and/or on-line repair information availability. • Is any related repair information available?	Yes	Perform the repair or diagnosis according to the available repair information. • If the vehicle is not repaired, go to the next step.
		No	Go to the next step.
3	**INSPECT EEC FUSE** • Turn the ignition switch to off. • Inspect the EEC fuse for failure and proper. • Is it normal?	Yes	Go to step 6.
		No	• If the EEC fuse has been melt down, then go to the next step. • If the EEC fuse is not installed correctly, install it correctly then go to Step 7.
4	**INSPECT MONITOR CIRCUIT FOR SHORT TO GROUND** • Disconnect the battery cables. • Inspect for continuity between EEC fuse terminal and body ground. • Is there continuity?	Yes	Repair or replace the wiring harness for a short to ground and install new fuse, then go to Step 7.
		No	Go to step 7.
5	**INSPECT PCM CONNECTOR FOR POOR CONNECTION** • Disconnect the PCM connector. • Inspect for poor connection (such as damaged/ pulled-out pins, corrosion). • Is there any malfunction?	Yes	Repair the terminals, then go to Step 7.
		No	Go to the next step.
6	**INSPECT MONITOR CIRCUIT FOR OPEN CIRCUIT** • Disconnect the battery cables. • Inspect for continuity between EEC fuse terminal and PCM terminal 2Z (harness-side). • Is there continuity?	Yes	Go to the next step.
		No	Repair or replace the wiring harness for an open circuit, then go to the next step.
7	**VERIFY TROUBLESHOOTING OF DTC P2507 COMPLETED** • Make sure to reconnect all disconnected connectors. • Turn the ignition switch to the ON position (Engine off). • Clear the DTC from the PCM memory using the WDS or equivalent. • Start the engine and warm it up completely. • Is the same DTC present?	Yes	Replace the PCM, then go to the next step. (See 01–40B–6 PCM REMOVAL/INSTALLATION [L3 WITH TC].)
		No	Go to the next step.
8	**VERIFY AFTER REPAIR PROCEDURE** • Perform the "After Repair Procedure". (See 01–02B–8 AFTER REPAIR PROCEDURE [L3 WITH TC].) • Are any DTCs present?	Yes	Go to the applicable DTC inspection. (See 01–02B–14 DTC TABLE [L3 WITH TC].)
		No	Troubleshooting completed.

DTC P2610 [L3 WITH TC]

E6U010202600W04

DTC P2610	PCM internal engine off timer performance
DETECTION CONDITION	• PCM internal engine off timer is damaged. **Diagnostic support note** • This is a continuous monitor (CCM). • The MIL illuminates if the PCM detects the above malfunction condition in two consecutive drive cycles or in one drive cycle while the DTC for the same malfunction has been stored in the PCM. • PENDING CODE is available if the PCM detects the above malfunction condition during the first drive cycle. • FREEZE FRAME DATA is available. • DTCs are stored in the PCM memory.
POSSIBLE CAUSE	• PCM internal engine off timer is damaged.

Diagnostic procedure

STEP	INSPECTION		ACTION
1	**VERIFY FREEZE FRAME DATA HAS BEEN RECORDED** • Has the FREEZE FRAME DATA been recorded?	Yes	Go to the next step.
		No	Record the FREEZE FRAME DATA on the repair order, then go to the next step.
2	**VERIFY RELATED REPAIR INFORMATION AVAILABILITY** • Verify related service Bulletins and/or on-line repair information availability. • Is any related repair information available?	Yes	Perform the repair or diagnosis according to the available repair information. • If the vehicle is not repaired, go to the next step.
		No	Go to the next step.
3	**VERIFY TROUBLESHOOTING OF DTC P2610 COMPLETED** • Make sure to reconnect all the disconnected connectors. • Clear the DTC from the PCM memory using the WDS or equivalent. • Start the engine. • Is the same DTC present?	Yes	Replace the PCM, then go to the next step. (See 01–40B–6 PCM REMOVAL/INSTALLATION [L3 WITH TC].)
		No	Go to the next step.
4	**VERIFY AFTER REPAIR PROCEDURE** • Perform the "AFTER REPAIR PROCEDURE". (See 01–02B–8 AFTER REPAIR PROCEDURE [L3 WITH TC].) • Are any DTCs present?	Yes	Go to the applicable DTC troubleshooting. (See 01–02B–14 DTC TABLE [L3 WITH TC].)
		No	DTC troubleshooting completed.

01–02C ON-BOARD DIAGNOSTIC [ENGINE CONTROL SYSTEM (AJ)]

NTROL SYSTEM WIRING DIAGRAM [AJ] 01–02C–3
MONITORING SYSTEM AND CONTROL SYSTEM DEVICE RELATIONSHIP CHART [AJ] 01–02C–5
OBD-II PENDING TROUBLE CODES [AJ] 01–02C–5
OBD-II FREEZE FRAME DATA [AJ] ... 01–02C–5
OBD-II ON-BOARD SYSTEM READINESS TEST [AJ] 01–02C–5
OBD-II DIAGNOSTIC MONITORING TEST RESULTS [AJ] 01–02C–6
OBD-II READ/CLEAR DIAGNOSTIC TEST RESULTS [AJ] 01–02C–6
OBD-II PARAMETER IDENTIFICATION (PID) ACCESS [AJ] 01–02C–6
ON-BOARD DIAGNOSTIC TEST [AJ] 01–02C–6
- DTC Reading Procedure 01–02C–6
- Pending Trouble Code Access Procedure 01–02C–6
- Freeze Frame PID Data Access Procedure 01–02C–6
- On-Board System Readiness Tests Access Procedure 01–02C–7
- PID/DATA Monitor and ecord Procedure 01–02C–7
- Diagnostic Monitoring Test Results Access Procedure 01–02C–7

AFTER REPAIR PROCEDURE [AJ] ... 01–02C–7
KOEO/KOER SELF TEST [AJ] 01–02C–8
OBD-II DRIVE MODE [AJ] 01–02C–8
- Mode 1 (PCM Adaptive Memory Produce Drive Mode) 01–02C–8
- Mode 2 (EGR System Repair Verification Drive Mode) 01–02C–9
- Mode 3 (HO2S heater, HO2S, and TWC Repair Verification Drive Mode) 01–02C–9
- Mode 6 (EVAP System Repair Verification Drive Mode) 01–02C–10
- Single Drive Mode (PCM Adaptive Memory Produce, EGR System, HO2S heater, HO2S, TWC, and EVAP System Repair Verification Drive Mode) 01–02C–10

DIAGNOSTIC MONITORING TEST RESULTS [AJ] 01–02C–12
DTC TABLE [AJ] 01–02C–13
DTC B1342 [AJ] 01–02C–19
DTC P0011 [AJ] 01–02C–19
DTC P0012 [AJ] 01–02C–20
DTC P0016, P0018 [AJ] 01–02C–22
DTC P0021 [AJ] 01–02C–24
DTC P0022 [AJ] 01–02C–25
DTC P0031 [AJ] 01–02C–27
C P0032 [AJ] 01–02C–29
C P0037 [AJ] 01–02C–31
DTC P0038 [AJ] 01–02C–33
DTC P0051 [AJ] 01–02C–35
DTC P0052 [AJ] 01–02C–37
DTC P0057 [AJ] 01–02C–39
DTC P0058 [AJ] 01–02C–41
DTC P0101 [AJ] 01–02C–42
DTC P0102 [AJ] 01–02C–44
DTC P0103 [AJ] 01–02C–46
DTC P0111 [AJ] 01–02C–48
DTC P0112 [AJ] 01–02C–49
DTC P0113 [AJ] 01–02C–51
DTC P0116 [AJ] 01–02C–52
DTC P0117 [AJ] 01–02C–54
DTC P0118 [AJ] 01–02C–56
DTC P0122 [AJ] 01–02C–58
DTC P0123 [AJ] 01–02C–60
DTC P0125 [AJ] 01–02C–62
DTC P0126, P0128 [AJ] 01–02C–64
DTC P0131, P0151 [AJ] 01–02C–66
DTC P0132, P0152 [AJ] 01–02C–69
DTC P0133, P0153 [AJ] 01–02C–71
DTC P0134, P0154 [AJ] 01–02C–74
DTC P0137, P0157 [AJ] 01–02C–76
DTC P0138, P0158 [AJ] 01–02C–79
DTC P0139, P0159 [AJ] 01–02C–81
DTC P0140, P0160 [AJ] 01–02C–83
DTC P0222 [AJ] 01–02C–85
DTC P0223 [AJ] 01–02C–87
DTC P0300 [AJ] 01–02C–89
DTC P0301, P0302, P0303, P0304, P0305, P0306 [AJ] 01–02C–92
DTC P0327 [AJ] 01–02C–95
DTC P0328 [AJ] 01–02C–97
DTC P0335 [AJ] 01–02C–99
DTC P0340 [AJ] 01–02C–102
DTC P0345 [AJ] 01–02C–105
DTC P0401 [AJ] 01–02C–107
DTC P0403 [AJ] 01–02C–109
DTC P0421, P0431 [AJ] 01–02C–112
DTC P0441 [AJ] 01–02C–113
DTC P0442 [AJ] 01–02C–115
DTC P0443 [AJ] 01–02C–118
DTC P0446 [AJ] 01–02C–120
DTC P0455 [AJ] 01–02C–122
DTC P0456 [AJ] 01–02C–124
DTC P0461 [AJ] 01–02C–126
DTC P0462 [AJ] 01–02C–127
DTC P0463 [AJ] 01–02C–128
DTC P0480 [AJ] 01–02C–129
DTC P0500 [AJ] 01–02C–131
DTC P0505 [AJ] 01–02C–134
DTC P0506 [AJ] 01–02C–136
DTC P0507 [AJ] 01–02C–138
DTC P0550 [AJ] 01–02C–139
DTC P0564 [AJ] 01–02C–141
DTC P0571 [AJ] 01–02C–143
DTC P050A [AJ] 01–02C–144
DTC P050B [AJ] 01–02C–146
DTC P0601 [AJ] 01–02C–148
DTC P0602 [AJ] 01–02C–149
DTC P0604 [AJ] 01–02C–150
DTC P0606 [AJ] 01–02C–151
DTC P0610 [AJ] 01–02C–152

DTC P0638 [AJ] 01–02C–153
DTC P0703 [AJ] 01–02C–154
DTC P0704 [AJ] 01–02C–156
DTC P0850 [AJ] 01–02C–158
DTC P2088 [AJ] 01–02C–161
DTC P2089 [AJ] 01–02C–163
DTC P2092 [AJ] 01–02C–165
DTC P2093 [AJ] 01–02C–167
DTC P2096, P2098 [AJ] 01–02C–168
DTC P2097, P2099 [AJ] 01–02C–171
DTC P2101 [AJ] 01–02C–173
DTC P2107 [AJ] 01–02C–176
DTC P2108 [AJ] 01–02C–177
DTC P2109 [AJ] 01–02C–178
DTC P2112 [AJ] 01–02C–179
DTC P2119 [AJ] 01–02C–180
DTC P2122 [AJ] 01–02C–181
DTC P2123 [AJ] 01–02C–183
DTC P2127 [AJ] 01–02C–185
DTC P2128 [AJ] 01–02C–187
DTC P2135 [AJ] 01–02C–189
DTC P2138 [AJ] 01–02C–190
DTC P2144 [AJ] 01–02C–191
DTC P2145 [AJ] 01–02C–193
DTC P2177, P2179 [AJ] 01–02C–195
DTC P2178, P2180 [AJ] 01–02C–198
DTC P2187, P2189 [AJ] 01–02C–20
DTC P2188, P2190 [AJ] 01–02C–20
DTC P2195, P2197 [AJ] 01–02C–205
DTC P2196, P2198 [AJ] 01–02C–207
DTC P2227 [AJ] 01–02C–209
DTC P2228 [AJ] 01–02C–210
DTC P2229 [AJ] 01–02C–212
DTC P2401 [AJ] 01–02C–214
DTC P2402 [AJ] 01–02C–217
DTC P2404 [AJ] 01–02C–219
DTC P2405 [AJ] 01–02C–220
DTC P2407 [AJ] 01–02C–221
DTC P2502 [AJ] 01–02C–222
DTC P2503 [AJ] 01–02C–223
DTC P2504 [AJ] 01–02C–226
DTC P2507 [AJ] 01–02C–229
DTC P2610 [AJ] 01–02C–231
DTC P2676 [AJ] 01–02C–232
DTC P2677 [AJ] 01–02C–234

CONTROL SYSTEM WIRING DIAGRAM [AJ]

E6U010218881W01

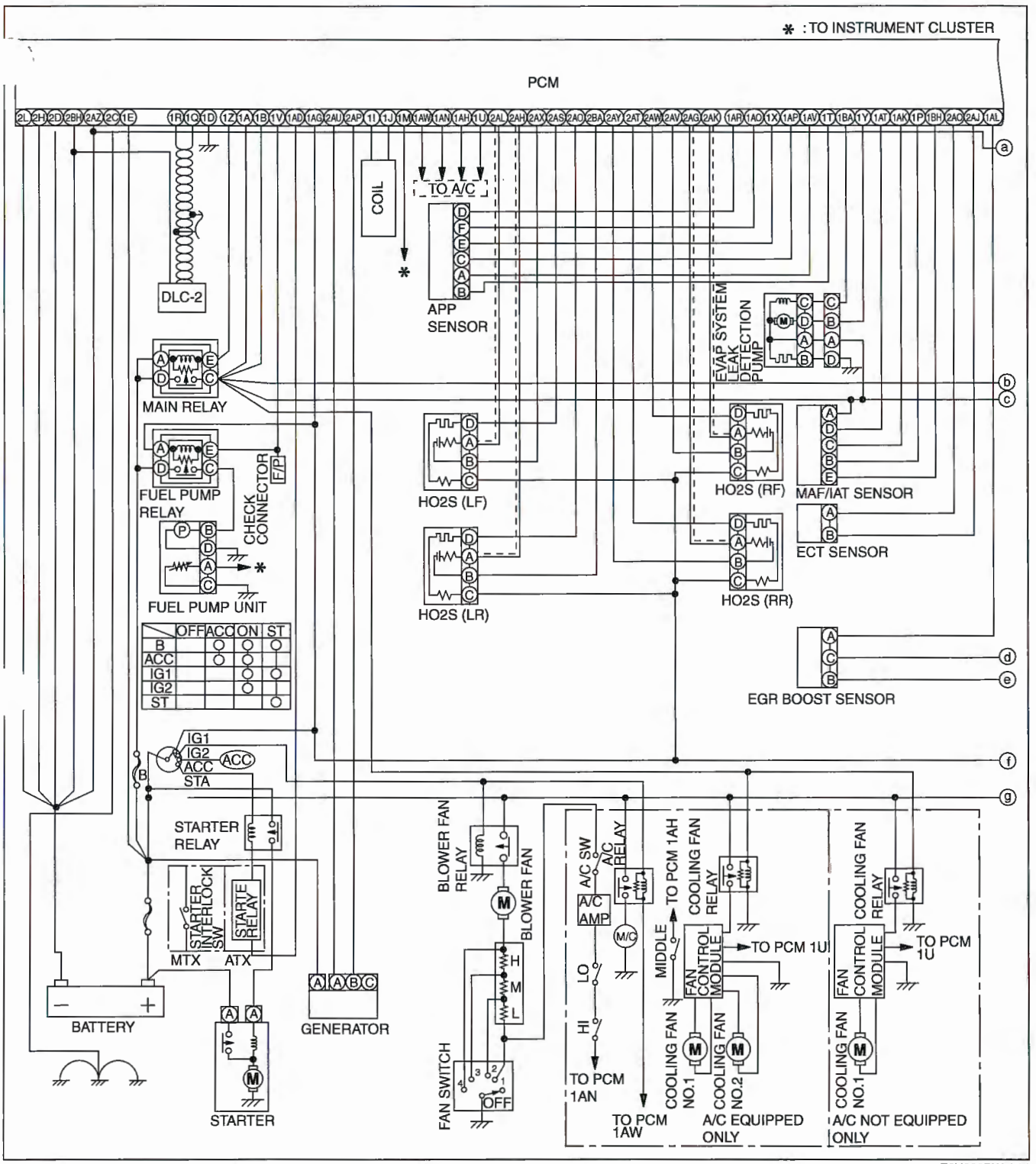

E6U000BW5L01

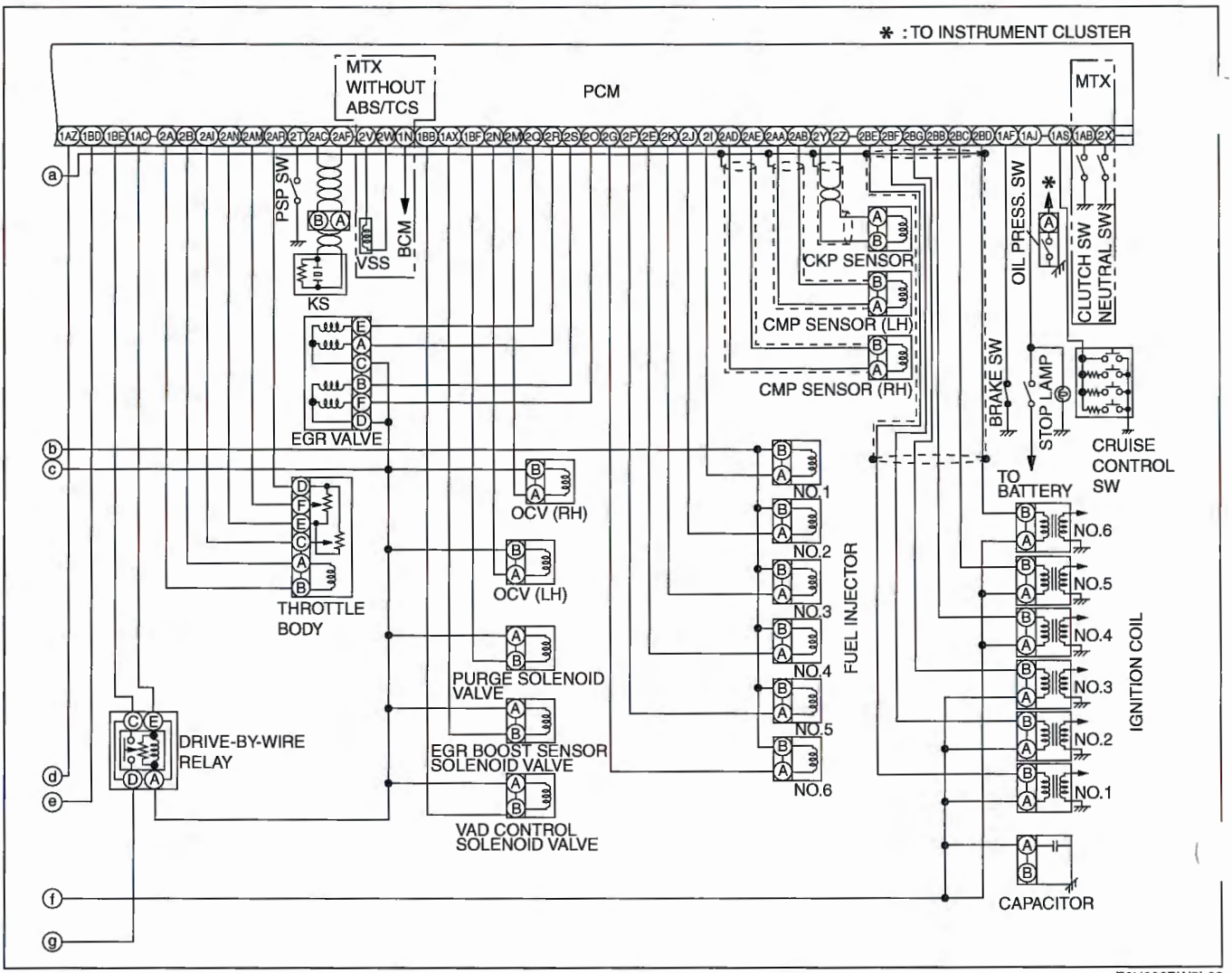

E6U000BW5L02

MONITORING SYSTEM AND CONTROL SYSTEM DEVICE RELATIONSHIP CHART [AJ]

E6U010218881W02

×: Applicable

Component	Oxygen sensor monitor	Oxygen sensor heater monitor	Catalyst monitor	Misfire monitor	Fuel system monitor	EGR system monitor	Evaporative system monitor	Thermostat monitor
Input								
PSP switch					×	×		
A/C switch, refrigerant pressure switch (high, low pressure)					×	×		×
TP sensor	×		×	×	×	×	×	
ECT sensor	×	×	×	×	×	×	×	×
IAT sensor	×		×	×	×	×	×	×
MAF sensor	×	×	×	×	×	×		×
HO2S (FR, FL)	×		×					
HO2S (RR, RL)	×		×					
EGR boost sensor						×		
CMP sensor (RH, LH)				×	×			
CKP sensor	×	×	×	×	×	×	×	×
VSS	×		×	×	×	×	×	×
Fuel gauge sender unit							×	
Output								
Fuel injector					×			
EGR valve						×		
EGR boost sensor solenoid valve						×		
Purge solenoid valve	×				×		×	
EVAP system leak detection pump							×	
MIL	×	×	×	×	×	×	×	×
DLC-2	×	×	×	×	×	×	×	×

OBD-II PENDING TROUBLE CODES [AJ]

E6U010218881W03

- These appear when a problem is detected in a monitored system. The code for a failed system is stored in the PCM memory in the first drive cycle. This code is called the pending code. If the PCM judges that the system returned to normal or the problem was mistakenly detected, deletes the pending code. If the problem is found in the second drive cycle too, the PCM judges that the system has failed, and the DTC is stored.

OBD-II FREEZE FRAME DATA [AJ]

E6U010218881W04

- This is the technical data which indicates the engine's condition at the time of the first malfunction. This data will remain in the memory even if another emission-related DTC is stored, with the exception of Misfire or Fuel System DTCs. Once freeze frame data for Misfire or Fuel System DTC is stored, it will overwrite any previous data and the freeze frame will not be overwritten again.

OBD-II ON-BOARD SYSTEM READINESS TEST [AJ]

E6U010218881W05

- This shows the OBD-II systems operating status. If any monitor function is incomplete, WDS or equivalent will identify which monitor function has not been completed. Misfires, Fuel System and Comprehensive Components (CCM) are continuous monitoring-type functions. The catalyst, EGR system, evaporation system and oxygen sensor will be monitored under drive cycles. The OBD-II diagnostic system is initialized by performing the DTC cancellation procedure or disconnecting the negative battery cable.

OBD-II DIAGNOSTIC MONITORING TEST RESULTS [AJ]

E6U010218881W06

- The results from the intermittent monitor system's technical data are used to determine whether the system is normal or not. They also display the system's thresholds and diagnostic results. The intermittent monitor system monitors the oxygen sensor, EVAP purge system, catalyst and the EGR system.

OBD-II READ/CLEAR DIAGNOSTIC TEST RESULTS [AJ]

E6U010218881W07

- This retrieves all stored DTCs in the PCM and clears the DTC, Freeze Frame Data, On-Board Readiness Test Results, Diagnostic Monitoring Test Results and Pending Trouble Codes.

OBD-II PARAMETER IDENTIFICATION (PID) ACCESS [AJ]

E6U010218881W08

- The PID mode allows access to certain data values, analog and digital inputs and outputs, calculated values and system status information. Since PID values for output devices are PCM internal data values, inspect each device to identify which output devices are malfunctioning.

ON-BOARD DIAGNOSTIC TEST [AJ]

E6U010218881W09

DTC Reading Procedure

1. Perform the necessary vehicle preparation and visual inspection.
2. Connect the WDS or equivalent to the vehicle DLC-2 16-pin connector located on the left side of the center console.
3. Retrieve DTCs using the WDS or equivalent.

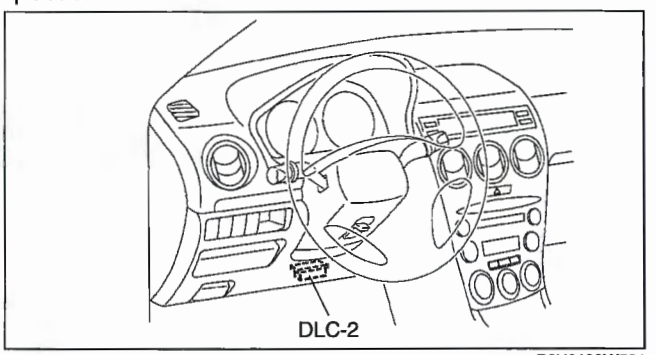

B6U0102W501

Pending Trouble Code Access Procedure

1. Perform the necessary vehicle preparation and visual inspection.
2. Connect the WDS or equivalent to the vehicle DLC-2 16-pin connector located on the left side of the center console.
3. Retrieve **Pending trouble codes** using the WDS or equivalent.

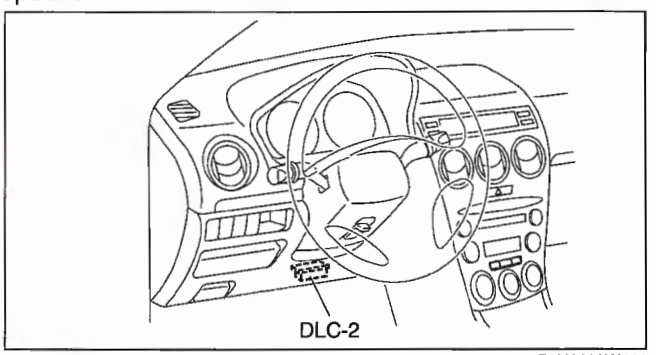

B6U0102W501

Freeze Frame PID Data Access Procedure

1. Perform the necessary vehicle preparation and visual inspection.
2. Connect the WDS or equivalent to the vehicle DLC-2 16-pin connector located on the left side of the center console.
3. Record the FREEZE FRAME PID DATA using the WDS or equivalent.

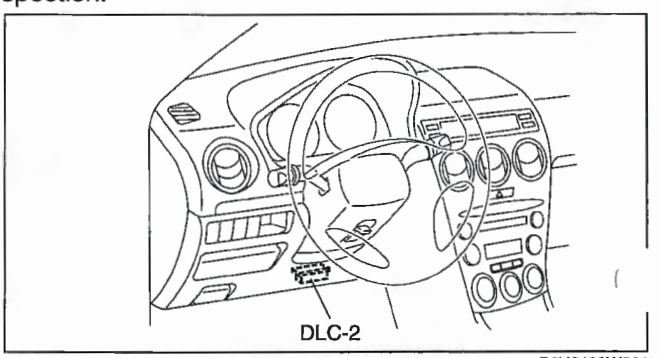

B6U0102W501

On-Board System Readiness Tests Access Procedure

1. Perform the necessary vehicle preparation and visual inspection.
2. Connect the WDS or equivalent to the vehicle DLC-2 16-pin connector located on the left side of the center console.
3. Monitor the OBD-II systems operating status using the WDS or equivalent.

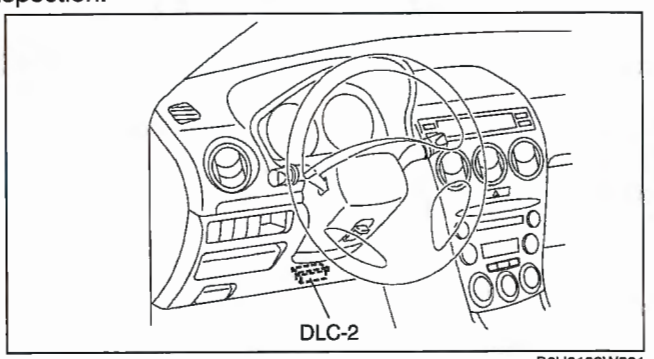

B6U0102W501

PID/DATA Monitor and Record Procedure

1. Perform the necessary vehicle preparation and visual inspection.
2. Connect the WDS or equivalent to the vehicle DLC-2 16-pin connector located on the left side of the center console.
3. Access and monitor PIDs using the WDS or equivalent.

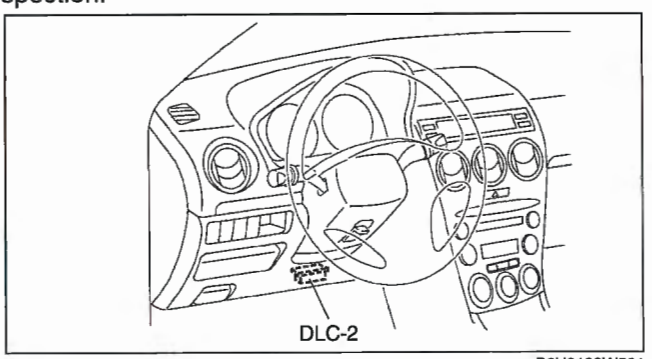

B6U0102W501

ıgnostic Monitoring Test Results Access Procedure

1. Perform the necessary vehicle preparation and visual inspection.
2. Connect the WDS or equivalent to the vehicle DLC-2 16-pin connector located on the left side of the center console.
3. Access to the DIAGNOSTIC MONITORING TEST RESULTS and read the test results using the WDS or equivalent.

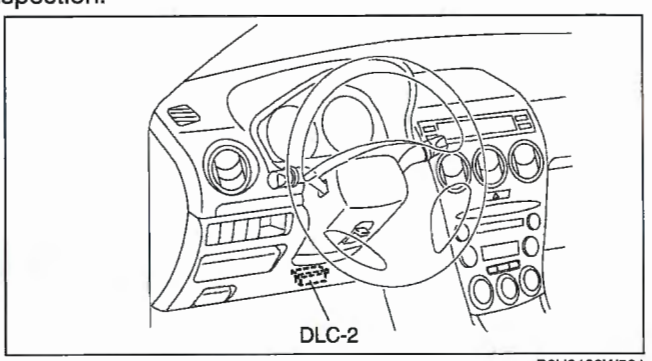

B6U0102W501

AFTER REPAIR PROCEDURE [AJ]

1. Connect the WDS or equivalent to the DLC-2.
2. Cycle the ignition switch from OFF to ON.
3. Record DTC if retrieved.
4. Erase all diagnostic data using the WDS or equivalent.

E6U010218881W10

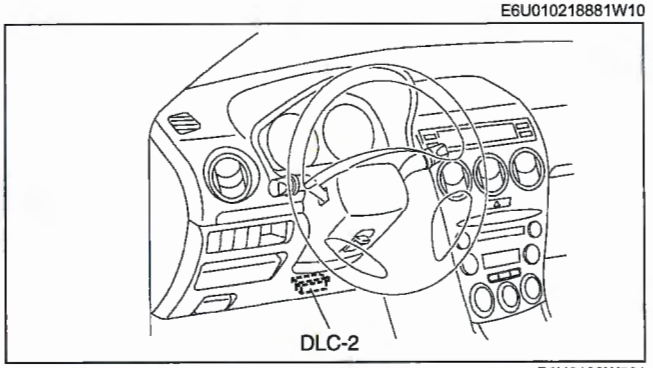

B6U0102W501

KOEO/KOER SELF TEST [AJ]

E6U010218881W11

1. Perform the necessary vehicle preparation and visual inspection.
2. Connect the WDS or equivalent to the vehicle DLC-2 16-pin connector located in the driver compartment.
3. Retrieve the KOEO/KOER DTCs using the WDS or equivalent.

OBD-II DRIVE MODE [AJ]

E6U010218881W12

- Using the OBD-II drive mode, the monitoring item requested by OBD-II regulations can be easily diagnosed.
- Performing the Drive Mode inspects the OBD-II system for proper operation and must be performed to ensure that no additional DTCs are present.
- The OBD-II drive mode is divided into the specific drive mode and single drive mode.
- For the specific drive mode, specified drive modes have been set for each individual monitoring item requested by OBD-II regulations, and they can be diagnosed individually. For the single drive mode, the entire monitoring item requested by OBD-II regulations can be diagnosed.
- The following modes are in the specific drive mode. The applicable system is diagnosed by driving in the following drive modes.
  - — PCM Adaptive Memory Produce Drive Mode
  - — EGR System Repair Verification Drive Mode
  - — HO2S heater, HO2S, and TWC Repair Verification Drive Mode
  - — EVAP System Repair Verification Drive Mode
- The following systems are diagnosed with the single drive mode.
  - — EGR system
  - — HO2S
  - — HO2S heater
  - — Catalytic converter (TWC)
  - — Fuel, misfire and evaporative (EVAP) system

Caution

- **While performing the Drive Mode, always operate the vehicle in a safe and lawful manner.**
- **When the WDS or equivalent is used to observe monitor system status while driving, be sure to have another technician with you, or record the data in the WDS or equivalent using the PID/DATA MONITOR AND RECORD function and inspect later.**

Note

- Vehicle speed and engine speed detected by the PCM may differ from that indicated by the speedometer and tachometer. Use the WDS or equivalent to monitor vehicle speed.
- If the OBD-II system inspection is not completed during the Drive Mode, the following causes are considered:
  - — The OBD-II system detects the malfunction.
  - — The Drive Mode procedure is not completed correctly.
- Disconnecting the battery will reset the memory. Do not disconnect the battery during and after Drive Mode.
- The WDS or equivalent can be used at anytime through the course of the Drive Mode to monitor the completion status. Monitoring can be done by viewing the ON BOARD SYSTEM READINESS menu.
- The OBD monitoring status can be confirmed with the ignition switch operation. During KOEO, the MIL illuminates for a fail-light inspection for **approx. 17 s**. The OBD monitoring status is confirmed after the fail-light inspection.
  - — If all of the diagnosis is completed even one time, the MIL will continue to illuminate.
  - — If all of the diagnosis is not completed, the MIL flashes for **approx. 7 s**, and then it illuminates until the engine is started.

Mode 1 (PCM Adaptive Memory Produce Drive Mode)

1. Start the engine and warm up completely.
2. Verify the following conditions and correct if necessary:
   - All accessory loads (A/C, headlights, blower fan, rear window defroster) are off.
   - Initial ignition timing and idle speed are within the specification.
3. Perform no load racing at the engine speed of **2,500—3,500 rpm** for **15 s or more**, then idle the engine for **60 s or more** after the cooling fan stopped. If possible, monitor RPM PID for engine speed during this procedure.

Mode 2 (EGR System Repair Verification Drive Mode)

1. Perform "PCM Adaptive Memory Produce Drive Mode "first.
2. Verify that all accessory loads (A/C, headlights, blower fan, rear window defroster) are off.
3. Drive the vehicle as shown in the graph.
   Stop the vehicle and access the ON BOARD SYSTEM READINESS menu of GENERIC OBD-II FUNCTION to verify the OBD monitoring status.
   - If completed, the OBD monitoring status items change from non-completed to completed.
   - If not completed, turn the ignition switch off, then repeat from Step 3.
5. Access the DIAGNOSTIC MONITORING TEST RESULTS menu of GENERIC OBD-II FUNCTIONS to verify the monitor results.
   - If detected values are not within the specification, the repair has not been completed.
6. Verify the no DTCs are available.

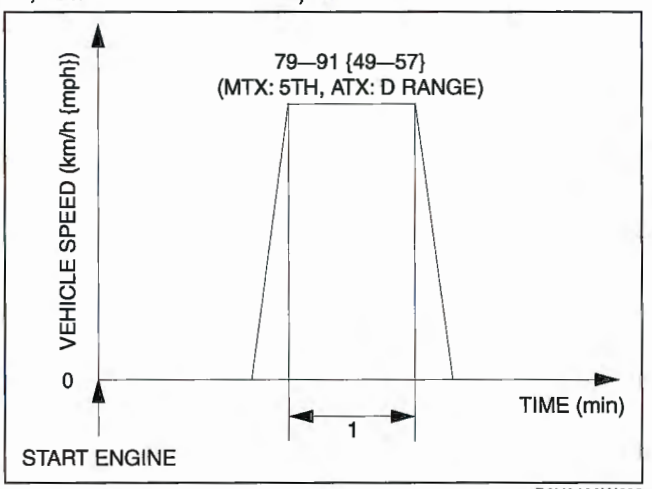

B6U0102W503

Mode 3 (HO2S heater, HO2S, and TWC Repair Verification Drive Mode)

1. Perform "PCM Adaptive Memory Production Drive Mode" first.
2. Verify all accessory loads (A/C, headlights, blower fan, rear window defroster) are off.
3. Drive the vehicle as shown in the graph. The driving conditions before driving at constant speed are not specified.

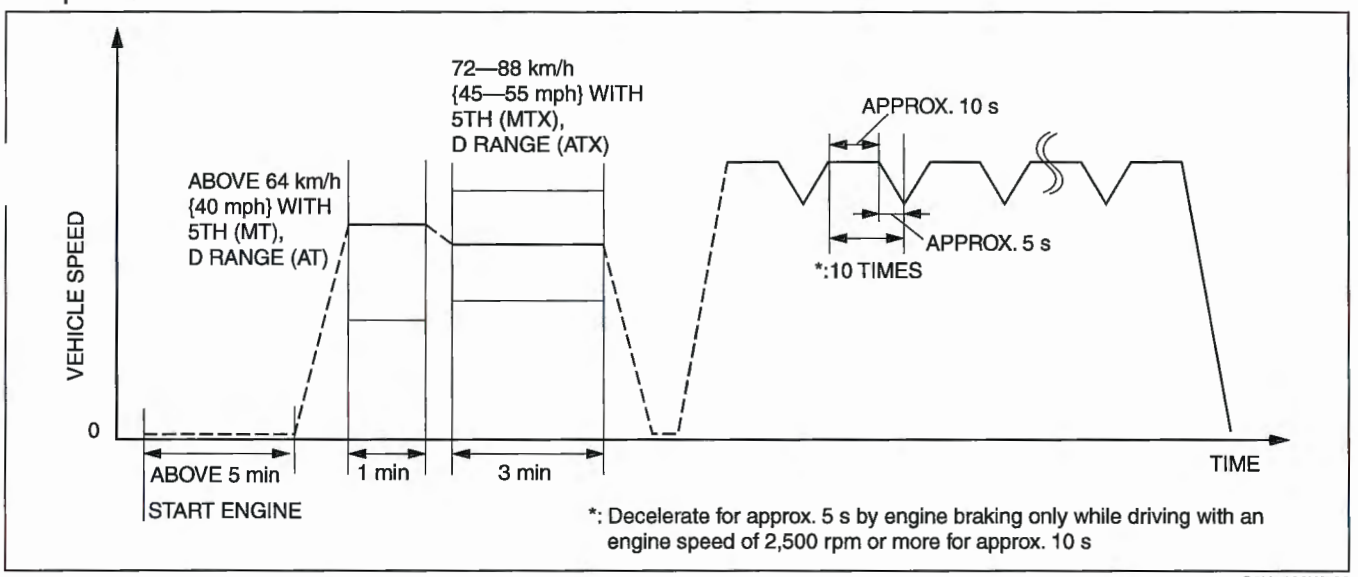

C6U0102W503

4. Stop the vehicle and access the ON BOARD SYSTEM READINESS menu of GENERIC OBD-II FUNCTION to verify the OBD monitoring status.
   - If completed, the OBD monitoring status items change from non-completed to completed.
   - If not completed, turn the ignition switch off, then repeat from Step 3.
5. Access the DIAGNOSTIC MONITORING TEST RESULTS menu of GENERIC OBD-II FUNCTIONS to verify the monitor results.
   - If the detected values are not within the specification, the repair has not been completed.
6. Verify no DTCs are available.

Mode 6 (EVAP System Repair Verification Drive Mode)

Note
- If "EVAP System Repair Verification Drive Mode "cannot be performed (the vehicle under the specified condition), perform the EVAP system test procedure as an alternative. (See 01–03C–70 Evaporative Emission (EVAP) System Leak Inspection.)

1. Verify that all of the following PIDs are within the following specifications. All PIDs must be within specifications before the engine is started to initiate the EVAP system test.
   - BARO: **72.2 kPa {542 mmHg, 21.3 inHg} or higher**
   - IAT: **5—35 °C {41—95 °F}**
   - Fuel tank level: **15—85%**
   - Battery positive voltage: **above 10.9 V**
2. Clear DTCs from the PCM memory using the WDS or equivalent.
3. Start the engine and idle it for **10 s or more**, then turn ignition switch off.
4. Leave the vehicle is this condition for **5 hours or more**.
5. Start the engine and idle it for **15 min or more**.
6. Drive the vehicle at the engine speed of **65—80 km/h {40—50 mph}** for **5 min or more**.
7. Stop the vehicle and turn ignition switch off.
8. Leave vehicle in this condition for **10 min or more**.
9. Start the engine.
10. Access the ON BOARD SYSTEM READINESS menu of GENERIC OBD-II FUNCTION to verify the OBD monitoring status.
    - If completed, the OBD monitoring status items change from non-completed to completed.
    - If not completed, turn the ignition switch off, then repeat from Step 3.
11. Access DIAGNOSTIC MONITORING TEST RESULTS menu of GENERIC OBD-II FUNCTIONS to verify the monitor results.
    - If the detected values are not within the specification, the repair has not been completed.
12. Verify that no DTCs are available.

Single Drive Mode (PCM Adaptive Memory Produce, EGR System, HO2S heater, HO2S, TWC, and EVAP System Repair Verification Drive Mode)

1. Start the engine and warm it up completely.
2. Clear the DTC from the PCM memory using the WDS or equivalent.
3. Verify the following conditions and correct if necessary:
   - All accessory loads (A/C, headlights, blower fan, rear window defroster) are off.
   - Initial ignition timing and idle speed are within the specification.
4. Verify that all of the following PIDs are within the following specifications. All PIDs must be within specifications from Step 5 to Step 6.
   - BARO: **72.2 kPa {542 mmHg, 21.3 inHg} or higher**
   - IAT: **5—35 °C {41—95 °F}**
   - Fuel tank level: **15—85%**
   - Battery positive voltage: **above 10.9 V**

5. With the vehicle stopped, race the engine at the engine speed indicated, and then drive the vehicle as shown in the graph. The driving conditions before driving at constant speed are not specified. If possible, monitor the RPM PID for engine speed during this procedure.

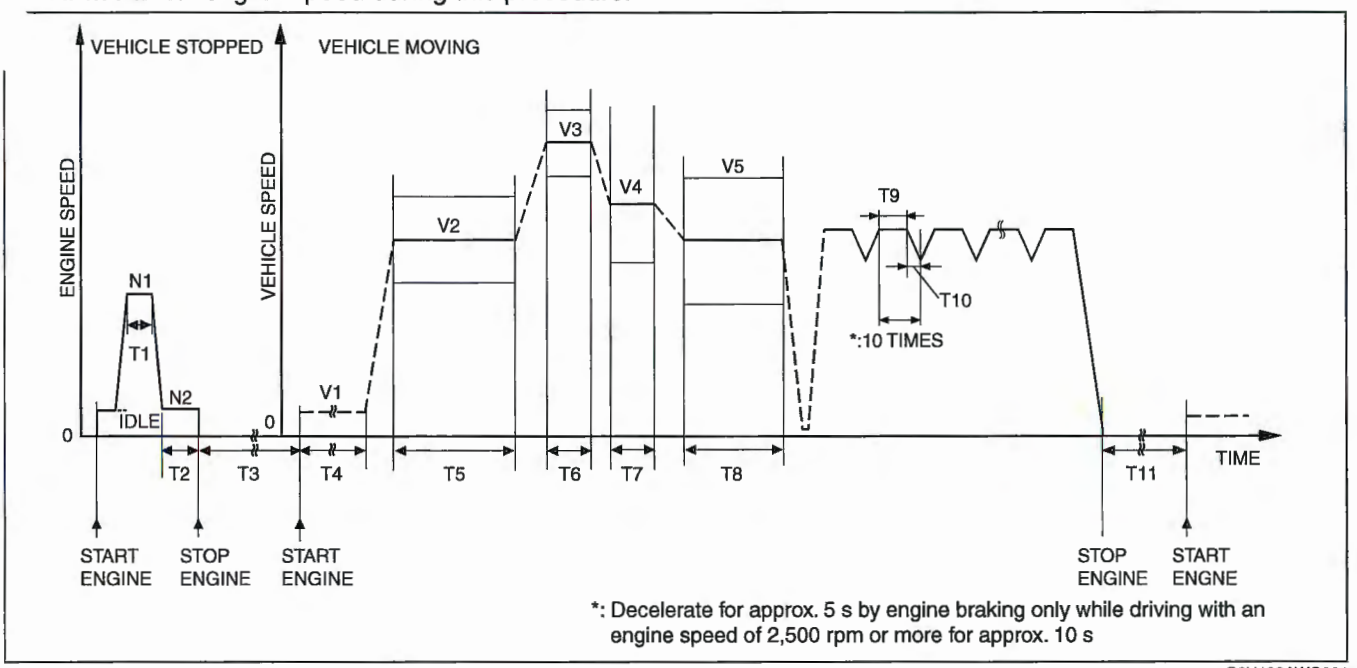

*: Decelerate for approx. 5 s by engine braking only while driving with an engine speed of 2,500 rpm or more for approx. 10 s

C6U102AWC001

Step	Time	Engine speed (rpm)	Vehicle speed (km/h {mph})	Vehicle condition
1	T1: More than 15 s	N1: 2,500—3,500	0 {0}	—
2	T2: More than 60 s	N2: Idle	0 {0}	Idle the engine after the cooling fan has stopped
3	T3: More than 5 h	0	0 {0}	Keep the ignition switch off
4	T4: More than 15 min	Idle	V1: 0 {0}	—
5	T5: 5 min	—	V2: 65—80 {40—50}	MTX: 5TH ATX: D range
6	T6: 1 min	—	V3: 79—91 {49—57}	MTX: 5TH ATX: D range
7	T7: 1 min	—	V4: Above 65 {40}	MTX: 5TH ATX: D range
8	T8: 3 min	—	V5: 73—88 {45—55}	MTX: 5TH ATX: D range
9	T9: Approx. 10 s	Above 2,500	—	Repeat acceleration and deceleration 10 times. (Decelerate without braking.)
10	T10: Approx. 5 s	—		
11	T11: More than 10 min	0	0 {0}	Keep the ignition switch off

6. Turn the ignition switch off and leave the vehicle for **10 min or more** with the ignition switch off.
7. Start and stop the engine.
8. Access the ON BOARD SYSTEM READINESS menu of GENERIC OBD-II FUNCTION to verify the OBD monitoring status.
   - If completed, all of the OBD monitoring status items change from non-completed to completed.
   - If not completed, turn the ignition switch off, then perform the applicable specific drive mode for any monitoring item that was not in the detection condition.
9. Access the DIAGNOSTIC MONITORING TEST RESULTS menu of GENERIC OBD-II FUNCTIONS to verify the monitor results.
   - If the detected values are not within the specification, the repair has not been completed.

DIAGNOSTIC MONITORING TEST RESULTS [AJ]

E6U010218881W13

- The purpose of this test mode is to confirm the result of the OBD-II monitor diagnostic test results. The result values stored when a particular monitor is completed are displayed. If the monitor is not completed, the initial value is displayed.

Test ID	Description	Related system
10: 01: 01	Rich to lean sensor threshold voltage (RF)	HO2S
10: 01: 02	Lean to rich sensor threshold voltage (RF)	
10: 01: 03	Low sensor voltage for switching time calculation (RF)	
10: 01: 04	High sensor voltage for switching time calculation (RF)	
10: 01: 05	Rich to lean sensor switching time (RF)	
10: 01: 06	Lean to rich sensor switching time (RF)	
10: 01: 0A	Sensor period (RF)	
10: 02: 03	Low sensor voltage for switching time calculation (RR)	
10: 02: 04	High sensor voltage for switching time calculation (RR)	
10: 02: 05	Rich to lean sensor switching time (RR)	
10: 05: 01	Rich to lean sensor threshold voltage (LF)	
10: 05: 02	Lean to rich sensor threshold voltage (LF)	
10: 05: 03	Low sensor voltage for switching time calculation (LF)	
10: 05: 04	High sensor voltage for switching time calculation (LF)	
10: 05: 05	Rich to lean sensor switching time (LF)	
10: 05: 06	Lean to rich sensor switching time (LF)	
10: 05: 0A	Sensor period (LF)	
10: 06: 03	Low sensor voltage for switching time calculation (LR)	
10: 06: 04	High sensor voltage for switching time calculation (LR)	
10: 06: 05	Rich to lean sensor switching time (LR)	
10: 21: 80	Front and rear HO2S switching time ratio (RH)	TWC
10: 22: 80	Front and rear HO2S switching time ratio (LH)	
10: 31: 83	EGR flow test	EGR
10: 3A: 80	Large leak check	EVAP
10: 3B: 80	Small leak check	
10: 3C: 80*	Very small leak check	
10: 3D: 80	Purge flow monitor	
10: A2: 0B	EWMA misfire counts for last 10 driving cycles	Misfire
10: A2: 0C	Misfire counts for last/current driving cycles	
10: A3: 0B	EWMA misfire counts for last 10 driving cycles	
10: A3: 0C	Misfire counts for last/current driving cycles	
10: A4: 0B	EWMA misfire counts for last 10 driving cycles	
10: A4: 0C	Misfire counts for last/current driving cycles	
10: A5: 0B	EWMA misfire counts for last 10 driving cycles	
10: A5: 0C	Misfire counts for last/current driving cycles	
10: A6: 0B	EWMA misfire counts for last 10 driving cycles	
10: A6: 0C	Misfire counts for last/current driving cycles	
10: A7: 0B	EWMA misfire counts for last 10 driving cycles	
10: A7: 0C	Misfire counts for last/current driving cycles	
10: E1: 80	Heat radiation ratio	Engine cooling system
10: E1: 81	ECT	

* : California emission regulation applicable model

DTC TABLE [AJ]

E6U010218881W14

×: Applicable
—: Not applicable

DTC No.	Condition	MIL	DC	Monitor item	SELF TEST type*2	Memory function	Page
B1213	(See 09–02F–3 DTC TABLE [IMMOBILIZER SYSTEM].)						
B1342	PCM malfunction	OFF	—	—	C, O	×	(See 01–02C–19 DTC B1342 [AJ].)
B1600	(See 09–02F–3 DTC TABLE [IMMOBILIZER SYSTEM].)						
B1601	(See 09–02F–3 DTC TABLE [IMMOBILIZER SYSTEM].)						
B1602	(See 09–02F–3 DTC TABLE [IMMOBILIZER SYSTEM].)						
B1681	(See 09–02F–3 DTC TABLE [IMMOBILIZER SYSTEM].)						
B2103	(See 09–02F–3 DTC TABLE [IMMOBILIZER SYSTEM].)						
B2431	(See 09–02F–3 DTC TABLE [IMMOBILIZER SYSTEM].)						
P0011	CMP timing over-advanced (RH)	ON	1	CCM	C, R	×	(See 01–02C–19 DTC P0011 [AJ].)
P0012	CMP timing over-retarded (RH)	ON	2	CCM	C, R	×	(See 01–02C–20 DTC P0012 [AJ].)
P0016	CKP-CMP (RH) correlation	ON	2	CCM	C	×	(See 01–02C–22 DTC P0016, P0018 [AJ].)
P0018	CKP-CMP (LH) correlation	ON	2	CCM	C	×	(See 01–02C–22 DTC P0016, P0018 [AJ].)
P0021	CMP timing over-advanced (LH)	ON	1	CCM	C, R	×	(See 01–02C–24 DTC P0021 [AJ].)
P0022	CMP timing over-retarded (LH)	ON	2	CCM	C, R	×	(See 01–02C–25 DTC P0022 [AJ].)
0031	HO2S heater (RF) circuit low	ON	2	HO2S heater	C, O, R	×	(See 01–02C–27 DTC P0031 [AJ].)
P0032	HO2S heater (RF) circuit high	ON	2	HO2S heater	C, O, R	×	(See 01–02C–29 DTC P0032 [AJ].)
P0037	HO2S heater (RR) circuit low	ON	2	HO2S heater	C, O, R	×	(See 01–02C–31 DTC P0037 [AJ].)
P0038	HO2S heater (RR) circuit high	ON	2	HO2S heater	C, O, R	×	(See 01–02C–33 DTC P0038 [AJ].)
P0051	HO2S heater (LF) circuit low	ON	2	HO2S heater	C, O, R	×	(See 01–02C–35 DTC P0051 [AJ].)
P0052	HO2S heater (LF) circuit high	ON	2	HO2S heater	C, O, R	×	(See 01–02C–37 DTC P0052 [AJ].)
P0057	HO2S heater (LR) circuit low	ON	2	HO2S heater	C, O, R	×	(See 01–02C–39 DTC P0057 [AJ].)
P0058	HO2S heater (LR) circuit high	ON	2	HO2S heater	C, O, R	×	(See 01–02C–41 DTC P0058 [AJ].)
P0101	MAF sensor inconsistent with TP sensor	ON	2	CCM	C	×	(See 01–02C–42 DTC P0101 [AJ].)
P0102	MAF circuit low input	ON	1	CCM	C, O, R	×	(See 01–02C–44 DTC P0102 [AJ].)
P0103	MAF circuit high input	ON	1	CCM	C, O, R	×	(See 01–02C–46 DTC P0103 [AJ].)
P0111	IAT circuit performance problem	ON	2	CCM	C	×	(See 01–02C–48 DTC P0111 [AJ].)
P0112	IAT circuit low input	ON	1	CCM	C, O, R	×	(See 01–02C–49 DTC P0112 [AJ].)
0113	IAT circuit high input	ON	1	CCM	C, O, R	×	(See 01–02C–51 DTC P0113 [AJ].)
P0116	Engine coolant temperature circuit range/performance	ON	1	Engine cooling system	C	×	(See 01–02C–52 DTC P0116 [AJ].)

DTC No.	Condition	MIL	DC	Monitor item	SELF TEST type*2	Memory function	Page
P0117	ECT circuit low input	ON	1	Engine cooling system	C, O, R	×	(See 01–02C–54 DTC P0117 [AJ].)
P0118	ECT circuit high input	ON	1	Engine cooling system	C, O, R	×	(See 01–02C–56 DTC P0118 [AJ].)
P0122	TP sensor No.1 circuit low input	ON	1	CCM	C, O, R	×	(See 01–02C–58 DTC P0122 [AJ].)
P0123	TP sensor No.1 circuit high input	ON	1	CCM	C, O, R	×	(See 01–02C–60 DTC P0123 [AJ].)
P0125	Excessive time to enter closed loop fuel control	ON	2	Engine cooling system	C	×	(See 01–02C–62 DTC P0125 [AJ].)
P0126	Coolant thermostat	ON	2	Engine cooling system	C	×	(See 01–02C–64 DTC P0126, P0128 [AJ].)
P0128	Coolant thermostat	ON	2	Engine cooling system	C	×	(See 01–02C–64 DTC P0126, P0128 [AJ].)
P0131	HO2S (RF) circuit low input	ON	2	HO2S	C, O, R	×	(See 01–02C–66 DTC P0131, P0151 [AJ].)
P0132	HO2S (RF) circuit high input	ON	2	HO2S	C, O, R	×	(See 01–02C–69 DTC P0132, P0152 [AJ].)
P0133	HO2S (RF) circuit malfunction	ON	2	HO2S	C	×	(See 01–02C–71 DTC P0133, P0153 [AJ].)
P0134	HO2S (RF) circuit no activity detected	ON	2	HO2S	C, R	×	(See 01–02C–74 DTC P0134, P015 [AJ].)
P0137	HO2S (RR) circuit low input	ON	2	HO2S	C, O, R	×	(See 01–02C–76 DTC P0137, P0157 [AJ].)
P0138	HO2S (RR) circuit high input	ON	2	HO2S	C, O, R	×	(See 01–02C–79 DTC P0138, P0158 [AJ].)
P0139	HO2S (RR) circuit problem	ON	2	HO2S	C	×	(See 01–02C–81 DTC P0139, P0159 [AJ].)
P0140	HO2S (RR) circuit no activity detected	ON	2	HO2S	C, R	×	(See 01–02C–83 DTC P0140, P0160 [AJ].)
P0151	HO2S (LF) circuit low input	ON	2	HO2S	C, O, R	×	(See 01–02C–66 DTC P0131, P0151 [AJ].)
P0152	HO2S (LF) circuit high input	ON	2	HO2S	C, O, R	×	(See 01–02C–69 DTC P0132, P0152 [AJ].)
P0153	HO2S (LF) circuit malfunction	ON	2	HO2S	C	×	(See 01–02C–71 DTC P0133, P0153 [AJ].)
P0154	HO2S (LF) circuit no activity detected	ON	2	HO2S	C, R	×	(See 01–02C–74 DTC P0134, P0154 [AJ].)
P0157	HO2S (LR) circuit low input	ON	2	HO2S	C, O, R	×	(See 01–02C–76 DTC P0137, P015 [AJ].)
P0158	HO2S (LR) circuit high input	ON	2	HO2S	C, O, R	×	(See 01–02C–79 DTC P0138, P0158 [AJ].)

DTC No.	Condition	MIL	DC	Monitor item	SELF TEST type*2	Memory function	Page
0159	HO2S (LR) circuit problem	ON	2	HO2S	C	×	(See 01–02C–81 DTC P0139, P0159 [AJ].)
P0160	HO2S (LR) circuit no activity detected	ON	2	HO2S	C, R	×	(See 01–02C–83 DTC P0140, P0160 [AJ].)
P0222	TP sensor No.2 circuit low input	ON	1	CCM	C, O, R	×	(See 01–02C–85 DTC P0222 [AJ].)
P0223	TP sensor No.2 circuit high input	ON	1	CCM	C, O, R	×	(See 01–02C–87 DTC P0223 [AJ].)
P0300	Random misfire detected	Flash / ON	1 or 2	Misfire	C, R	×	(See 01–02C–89 DTC P0300 [AJ].)
P0301	Cylinder No.1 misfire detected	Flash / ON	1 or 2	Misfire	C, R	×	(See 01–02C–92 DTC P0301, P0302, P0303, P0304, P0305, P0306 [AJ].)
P0302	Cylinder No.2 misfire detected	Flash / ON	1 or 2	Misfire	C, R	×	
P0303	Cylinder No.3 misfire detected	Flash / ON	1 or 2	Misfire	C, R	×	
P0304	Cylinder No.4 misfire detected	Flash / ON	1 or 2	Misfire	C, R	×	
P0305	Cylinder No.5 misfire detected	Flash / ON	1 or 2	Misfire	C, R	×	
P0306	Cylinder No.6 misfire detected	Flash / ON	1 or 2	Misfire	C, R	×	
P0327	KS circuit low input	ON	1	CCM	C, O, R	×	(See 01–02C–95 DTC P0327 [AJ].)
P0328	KS circuit high input	ON	1	CCM	C, O, R	×	(See 01–02C–97 DTC P0328 [AJ].)
P0335	CKP sensor circuit malfunction	ON	1	CCM	C	×	(See 01–02C–99 DTC P0335 [AJ].)
P0340	CMP sensor (RH) circuit malfunction	ON	1	CCM	C	×	(See 01–02C–102 DTC P0340 [AJ].)
P0345	CMP sensor (LH) circuit malfunction	ON	1	CCM	C	×	(See 01–02C–105 DTC P0345 [AJ].)
P0401	EGR flow insufficient detected	ON	2	EGR	C, R	×	(See 01–02C–107 DTC P0401 [AJ].)
P0403	EGR valve (stepper motor) circuit malfunction	ON	2	CCM	C, O, R	×	(See 01–02C–109 DTC P0403 [AJ].)
P0421	Warm-up catalyst system (RH) efficiency below threshold	ON	2	Catalyst	C	×	(See 01–02C–112 DTC P0421, P0431 [AJ].)
P0431	Warm-up catalyst system (LH) efficiency below threshold	ON	2	Catalyst	C	×	(See 01–02C–112 DTC P0421, P0431 [AJ].)
P0441	EVAP control system incorrect purge flow	ON	2	EVAP	C, R	×	(See 01–02C–113 DTC P0441 [AJ].)
P0442	EVAP control system leak detected (small leak)	ON	2	EVAP	C, R	×	(See 01–02C–115 DTC P0442 [AJ].)
P0443	EVAP control system purge control valve circuit malfunction	ON	2	CCM	C, O, R	×	(See 01–02C–118 DTC P0443 [AJ].)
P0446	Change-over valve (EVAP system leak detection pump) stuck close	ON	2	CCM	C, R	×	(See 01–02C–120 DTC P0446 [AJ].)
P0455	EVAP control system leak detected (large leak)	ON	2	EVAP	C, R	×	(See 01–02C–122 DTC P0455 [AJ].)
456*1	EVAP control system leak detected (very small leak)	ON	2	EVAP	C, R	×	(See 01–02C–124 DTC P0456 [AJ].)
P0461	Fuel gauge sender unit circuit range/ performance	ON	2	CCM	C	×	(See 01–02C–126 DTC P0461 [AJ].)

DTC No.	Condition	MIL	DC	Monitor item	SELF TEST type*2	Memory function	Page
P0462	Fuel gauge sender unit circuit low input	ON	2	CCM	C, O, R	×	(See 01–02C–12 DTC P0462 [AJ].)
P0463	Fuel gauge sender unit circuit high input	ON	2	CCM	C, O, R	×	(See 01–02C–128 DTC P0463 [AJ].)
P0480	Fan control circuit malfunction	OFF	1	Other	C, O, R	×	(See 01–02C–129 DTC P0480 [AJ].)
P0500	VSS circuit malfunction	ON	2	CCM	C	×	(See 01–02C–131 DTC P0500 [AJ].)
P0505	Idle control system malfunction	OFF	–	–	R	–	(See 01–02C–134 DTC P0505 [AJ].)
P0506	Idle control system RPM lower than expected	ON	2	CCM	C	×	(See 01–02C–136 DTC P0506 [AJ].)
P0507	Idle control system RPM higher than expected	ON	2	CCM	C	×	(See 01–02C–138 DTC P0507 [AJ].)
P050A	Cold start idle air control system performance	ON	2	CCM	C, R	×	(See 01–02C–144 DTC P050A [AJ].)
P050B	Cold start ignition timing performance	ON	2	CCM	C, R	×	(See 01–02C–146 DTC P050B [AJ].)
P0550	PSP switch circuit malfunction	ON	2	CCM	C	×	(See 01–02C–139 DTC P0550 [AJ].)
P0564	Cruise control switch circuit malfunction	OFF	1	Other	C	×	(See 01–02C–141 DTC P0564 [AJ].)
P0571	Brake switch circuit malfunction	OFF	1	Other	C	×	(See 01–02C–143 DTC P0571 [AJ].)
P0601	PCM memory check sum error	ON	1	CCM	C, O, R	×	(See 01–02C–148 DTC P0601 [AJ].)
P0602	PCM programming error	ON	1	CCM	C, O, R	×	(See 01–02C–149 DTC P0602 [AJ].)
P0604	PCM random access memory error	ON	1	CCM	C, O, R	×	(See 01–02C–150 DTC P0604 [AJ].)
P0606	ECM/PCM processor	ON	1	Other	C, O, R	×	(See 01–02C–151 DTC P0606 [AJ].)
P0610	Control module vehicle options error	ON	1	CCM	C, O, R	×	(See 01–02C–152 DTC P0610 [AJ].)
P0638	Throttle actuator control circuit range/ performance problem	ON	1	CCM	C	×	(See 01–02C–153 DTC P0638 [AJ].)
P0703	Brake switch No.1 input malfunction	ON	2	CCM	C	×	(See 01–02C–154 DTC P0703 [AJ].)
P0704*3	Clutch switch input malfunction	ON	2	CCM	C	×	(See 01–02C–156 DTC P0704 [AJ].)
P0850*3	Neutral switch input malfunction	ON	2	CCM	C	×	(See 01–02C–158 DTC P0850 [AJ].)
P2088	CMP actuator (RH) circuit low	ON	1	CCM	C, O, R	×	(See 01–02C–161 DTC P2088 [AJ].)
P2089	CMP actuator (RH) circuit high	ON	1	CCM	C, O, R	×	(See 01–02C–163 DTC P2089 [AJ].)
P2092	CMP actuator (LH) circuit low	ON	1	CCM	C, O, R	×	(See 01–02C–165 DTC P2092 [AJ].)
P2093	CMP actuator (LH) circuit high	ON	1	CCM	C, O, R	×	(See 01–02C–167 DTC P2093 [AJ].)
P2096	Target A/F feedback system too lean (Right bank)	ON	2	Fuel system	C	×	(See 01–02C–168 DTC P2096, P2098 [AJ].)
P2097	Target A/F feedback system too rich (Right bank)	ON	2	Fuel system	C	×	(See 01–02C–171 DTC P2097, P209 [AJ].)
P2098	Target A/F feedback system too lean (Left bank)	ON	2	Fuel system	C	×	(See 01–02C–168 DTC P2096, P2098 [AJ].)

DTC No.	Condition	MIL	DC	Monitor item	SELF TEST type*2	Memory function	Page
2099	Target A/F feedback system too rich (Left bank)	ON	2	Fuel system	C	×	(See 01–02C–171 DTC P2097, P2099 [AJ].)
P2101	Throttle actuator control motor circuit range/performance	ON	1	CCM	C, R	×	(See 01–02C–173 DTC P2101 [AJ].)
P2107	Throttle actuator control module processor problem	ON	1	CCM	C, R	×	(See 01–02C–176 DTC P2107 [AJ].)
P2108	Throttle actuator control module performance problem	ON	1	CCM	C, R	×	(See 01–02C–177 DTC P2108 [AJ].)
P2109	TP sensor minimum stop range/ performance problem	ON	1	CCM	C, R	×	(See 01–02C–178 DTC P2109 [AJ].)
P2112	Throttle actuator control system range/ performance problem	ON	1	CCM	C, R	×	(See 01–02C–179 DTC P2112 [AJ].)
P2119	Throttle actuator control throttle body range/performance problem	ON	2	CCM	C, R	×	(See 01–02C–180 DTC P2119 [AJ].)
P2122	APP sensor No.1 circuit low input	ON	1	CCM	C, O, R	×	(See 01–02C–181 DTC P2122 [AJ].)
P2123	APP sensor No.1 circuit high input	ON	1	CCM	C, O, R	×	(See 01–02C–183 DTC P2123 [AJ].)
P2127	APP sensor No.2 circuit low input	ON	1	CCM	C, O, R	×	(See 01–02C–185 DTC P2127 [AJ].)
P2128	APP sensor No.2 circuit high input	ON	1	CCM	C, O, R	×	(See 01–02C–187 DTC P2128 [AJ].)
P2135	TP sensor No.1/No.2 voltage correlation problem	ON	1	CCM	C, O, R	×	(See 01–02C–189 DTC P2135 [AJ].)
P2138	APP sensor No.1/No.2 voltage correlation problem	ON	1	CCM	C, O, R	×	(See 01–02C–190 DTC P2138 [AJ].)
2144	EGR boost sensor solenoid valve circuit low input	ON	2	CCM	C, O, R	×	(See 01–02C–191 DTC P2144 [AJ].)
P2145	EGR boost sensor solenoid valve circuit high input	ON	2	CCM	C, O, R	×	(See 01–02C–193 DTC P2145 [AJ].)
P2177	Fuel system too lean at off idle (Right bank)	ON	2	Fuel system	C, R	×	(See 01–02C–195 DTC P2177, P2179 [AJ].)
P2178	Fuel system too rich at off idle (Right bank)	ON	2	Fuel system	C, R	×	(See 01–02C–198 DTC P2178, P2180 [AJ].)
P2179	Fuel system too lean at off idle (Left bank)	ON	2	Fuel system	C, R	×	(See 01–02C–195 DTC P2177, P2179 [AJ].)
P2180	Fuel system too rich at off idle (Left bank)	ON	2	Fuel system	C, R	×	(See 01–02C–198 DTC P2178, P2180 [AJ].)
P2187	Fuel system too lean at idle (Right bank)	ON	2	Fuel system	C, R	×	(See 01–02C–200 DTC P2187, P2189 [AJ].)
P2188	Fuel system too rich at idle (Right bank)	ON	2	Fuel system	C, R	×	(See 01–02C–203 DTC P2188, P2190 [AJ].)
P2189	Fuel system too lean at idle (Left bank)	ON	2	Fuel system	C, R	×	(See 01–02C–200 DTC P2187, P2189 [AJ].)
P2190	Fuel system too rich at idle (Left bank)	ON	2	Fuel system	C, R	×	(See 01–02C–203 DTC P2188, P2190 [AJ].)
P2195	HO2S (RF) signal stuck lean	ON	2	HO2S	C	×	(See 01–02C–205 DTC P2195, P2197 [AJ].)

DTC No.	Condition	MIL	DC	Monitor item	SELF TEST type*2	Memory function	Page
P2196	HO2S (RF) signal stuck rich	ON	2	HO2S	C	×	(See 01–02C–20 DTC P2196, P219 [AJ].)
P2197	HO2S (LF) signal stuck lean	ON	2	HO2S	C	×	(See 01–02C–205 DTC P2195, P2197 [AJ].)
P2198	HO2S (LF) signal stuck rich	ON	2	HO2S	C	×	(See 01–02C–207 DTC P2196, P2198 [AJ].)
P2227	EGR boost sensor circuit performance problem	ON	2	CCM	C	×	(See 01–02C–209 DTC P2227 [AJ].)
P2228	EGR boost sensor circuit low input	ON	1	CCM	C, O, R	×	(See 01–02C–210 DTC P2228 [AJ].)
P2229	EGR boost sensor circuit high input	ON	1	CCM	C, O, R	×	(See 01–02C–212 DTC P2229 [AJ].)
P2401	EVAP system leak detection pump control circuit low	ON	2	CCM	C, R	×	(See 01–02C–214 DTC P2401 [AJ].)
P2402	EVAP system leak detection pump control circuit high	ON	2	CCM	C, R	×	(See 01–02C–217 DTC P2402 [AJ].)
P2404	EVAP system leak detection pump sense circuit malfunction	ON	2	CCM	C, R	×	(See 01–02C–219 DTC P2404 [AJ].)
P2405	EVAP system leak detection pump sense circuit low input	ON	2	CCM	C, R	×	(See 01–02C–220 DTC P2405 [AJ].)
P2407	EVAP system leak detection pump sense circuit intermittent	ON	2	CCM	C, R	×	(See 01–02C–221 DTC P2407 [AJ].)
P2502	Generator terminal B circuit open	OFF	1	Other	C, R	×	(See 01–02C–222 DTC P2502 [AJ].)
P2503	Generator output voltage signal no electricity	OFF	1	Other	C, R	×	(See 01–02C–22 DTC P2503 [AJ].)
P2504	Battery overcharge	OFF	1	Other	C, R	×	(See 01–02C–226 DTC P2504 [AJ].)
P2507	PCM B+ voltage low	ON	1	CCM	C, O, R	×	(See 01–02C–229 DTC P2507 [AJ].)
P2610	PCM internal engine off timer performance	ON	2	CCM	C	×	(See 01–02C–231 DTC P2610 [AJ].)
P2676	Variable air duct (VAD) control solenoid valve circuit low input	OFF	1	Other	C, O, R	×	(See 01–02C–232 DTC P2676 [AJ].)
P2677	Variable air duct (VAD) solenoid valve circuit high input	OFF	1	Other	C, O, R	×	(See 01–02C–234 DTC P2677 [AJ].)
U0073	CAN system communication error	(See 09–02A–4 DTC TABLE [MULTIPLEX COMMUNICATION SYSTEM (L3, AJ)].)					
U0101*4	Communication error to TCM	(See 09–02A–4 DTC TABLE [MULTIPLEX COMMUNICATION SYSTEM (L3, AJ)].)					
U0121	Communication error to ABS/TCS HU/CM	(See 09–02A–4 DTC TABLE [MULTIPLEX COMMUNICATION SYSTEM (L3, AJ)].)					
U0155	Communication error to instrument cluster	(See 09–02A–4 DTC TABLE [MULTIPLEX COMMUNICATION SYSTEM (L3, AJ)].)					

*1 : California emission regulation applicable model
*2 : C; CMDTC self test, O; KOEO selftest, R; KOER selftest
*3 : MTX
*4 : ATX

DTC B1342 [AJ]

E6U010208888W02

DTC B1342	PCM malfunction
DETECTION CONDITION	• Malfunction in the PCM internal circuit.
POSSIBLE CAUSE	• PCM internal malfunction

Diagnostic procedure

STEP	INSPECTION		ACTION
1	**VERIFY CURRENT STATUS OF MALFUNCTION** • Clear the DTC from the PCM memory using the WDS or equivalent. • Is same DTC present?	Yes	Replace the PCM, then go to the next step. (See 01–40C–5 PCM REMOVAL/INSTALLATION [AJ].)
		No	Go to the next step.
2	**VERIFY AFTER REPAIR PROCEDURE** • Perform the "AFTER REPAIR PROCEDURE". (See 01–02C–7 AFTER REPAIR PROCEDURE [AJ].) • Are any DTC present?	Yes	Go to the applicable DTC inspection. (See 01–02C–13 DTC TABLE [AJ].)
		No	Troubleshooting completed.

DTC P0011 [AJ]

E6U010200000W16

DTC P0011	CMP timing over-advanced (RH)
DETECTION CONDITION	• The actual valve timing is over-advanced by **20°** from the target valve timing when the OCV is controlled in the maximum valve timing retard condition. **MONITORING CONDITIONS** — Engine coolant temperature is **above 63 °C {145 °F}** **Diagnostic support note** • This is a continuous monitor (CCM). • MIL illuminates if the PCM detects the above malfunction condition during the first drive cycle. • FREEZE FRAME DATA is available. • DTC is stored in PCM memory.
POSSIBLE CAUSE	• Oil control valve system malfunction • Spool valve in OCV (RH) is stuck in advance position. • Variable valve timing actuator (RH) is stuck in advance position. • Loose timing chain or improper valve timing • PCM malfunction

Diagnostic procedure

STEP	INSPECTION		ACTION
1	**VERIFY FREEZE FRAME DATA HAS BEEN RECORDED** • Has FREEZE FRAME DATA been recorded?	Yes	Go to the next step.
		No	Record FREEZE FRAME DATA on repair order, then go to the next step.
2	**VERIFY RELATED REPAIR INFORMATION AVAILABILITY** • Check for related Service Bulletins and/or on-line repair information availability. • Is any related repair information available?	Yes	Perform repair or diagnosis according to the available repair information. • If the vehicle is not repaired, go to the next step.
		No	Go to the next step.
3	**INSPECT OCV (RH) FOR MALFUNCTION** • Start engine. • Increase engine speed. • Stop engine. • Remove OCV (RH). (See 01–10C–41 OIL CONTROL VALVE (OCV) REMOVAL/INSTALLATION [AJ].) • Inspect position of spool valve in OCV (RH). • Is spool valve located at valve retard position?	Yes	Go to the next step.
		No	Replace OCV (RH), then go to Step 6. (See 01–10C–41 OIL CONTROL VALVE (OCV) REMOVAL/INSTALLATION [AJ].)
4	**INSPECT STOPPER PIN MECHANISM** • Remove timing chain. • Inspect stopper pin. (See 01–10C–40 VARIABLE VALVE TIMING ACTUATOR INSPECTION [AJ].) • Is stopper pin mechanism normal?	Yes	Go to the next step.
		No	Replace variable valve timing actuator (RH), then go to Step 6. (See 01–10C–40 VARIABLE VALVE TIMING ACTUATOR REMOVAL/INSTALLATION [AJ].)

STEP	INSPECTION		ACTION
5	**INSPECT ROTOR POSITION** • Remove variable valve timing actuator (RH). (See 01–10C–40 VARIABLE VALVE TIMING ACTUATOR REMOVAL/INSTALLATION [AJ].) • Is rotor position at maximum valve timing retard?	Yes	**VARIABLE VALVE TIMING MECHANISM IS NORMAL** **Note** • This DTC is detected by intermittent concern. • Intermittent concern might be removed by cleaning mode of variable valve timing control function. Go to the next step.
		No	Replace variable valve timing actuator (RH), go to the next step. (See 01–10C–40 VARIABLE VALVE TIMING ACTUATOR REMOVAL/INSTALLATION [AJ].)
6	**VERIFY TROUBLESHOOTING OF DTC P0011 COMPLETED** • Make sure to reconnect all disconnected connectors. • Clear the DTC from the PCM memory using the WDS or equivalent. • Perform the KOER SELF TEST using the WDS or equivalent. • Is the PENDING CODE same DTC present?	Yes	Replace PCM, then go to the next step. (See 01–40C–5 PCM REMOVAL/INSTALLATION [AJ].)
		No	Go to the next step.
7	**VERIFY AFTER REPAIR PROCEDURE** • Perform "AFTER REPAIR PROCEDURE". (See 01–02C–7 AFTER REPAIR PROCEDURE [AJ].) • Are any DTCs present?	Yes	Go to applicable DTC troubleshooting. (See 01–02C–13 DTC TABLE [AJ].)
		No	Troubleshooting completed.

DTC P0012 [AJ]

E6U010200000W17

DTC P0012	CMP timing over-retarded (RH)
DETECTION CONDITION	• The actual valve timing is over-retarded by **10°** from the target valve timing for **4 s** when the OCV system control is within the feed-back range. **MONITORING CONDITIONS** — Engine coolant temperature is **above 63 °C {145 °F}** **Diagnostic support note** • This is a continuous monitor (CCM). • MIL illuminates if the PCM detects the above malfunction condition in two consecutive drive cycles or in one drive cycle while the DTC for the same malfunction has been stored in the PCM. • PENDING CODE is available if the PCM detects the above malfunction condition during the first drive cycle. • FREEZE FRAME DATA is available. • DTC is stored in PCM memory.
POSSIBLE CAUSE	• Low engine oil pressure • Oil control valve malfunction • Loose timing chain or improper valve timing • Spool valve in OCV (RH) is stuck in retard position • The following oil runners are clogged or have leakage: — Between oil pressure switch and OCV (RH) — Between OCV (RH) and variable valve timing actuator (RH) — In variable valve timing actuator (RH) • Variable valve timing actuator (RH) is stuck in retard position • PCM malfunction

Diagnostic procedure

STEP	INSPECTION		ACTION
1	**VERIFY FREEZE FRAME DATA HAS BEEN RECORDED** • Has FREEZE FRAME DATA been recorded?	Yes	Go to the next step.
		No	Record FREEZE FRAME DATA on repair order, then go to the next step.
2	**VERIFY RELATED REPAIR INFORMATION AVAILABILITY** • Check for related Service Bulletins and/or on-line repair information availability. • Is any related repair information available?	Yes	Perform repair or diagnosis according to the available repair information. • If the vehicle is not repaired, go to the next step.
		No	Go to the next step.
3	**VERIFY RELATED PENDING CODE OR STORED DTCs** • Is DTC P2088 or P2089 present?	Yes	Go to appropriate DTC troubleshooting procedure. (See 01–02C–13 DTC TABLE [AJ].)
		No	Go to the next step.
4	**VERIFY ENGINE OIL PRESSURE** • Start engine. • Does oil pressure warning light illuminate?	Yes	Inspect engine oil pressure. (See 01–11A–5 OIL PRESSURE INSPECTION [L3, AJ].)
		No	Go to the next step.
5	**VERIFY TIMING CHAIN INSTALLATION** • Stop engine. • Remove timing chain cover. • Is camshaft timing mark at correct point? (See 01–10C–6 TIMING CHAIN REMOVAL/ INSTALLATION [AJ].)	Yes	Go to the next step.
		No	Reinstall timing chain, then go to Step 8. (See 01–10C–6 TIMING CHAIN REMOVAL/ INSTALLATION [AJ].)
6	**INSPECT OCV (RH) FOR MALFUNCTION** • Stop engine. • Remove OCV (RH). (See 01–10C–41 OIL CONTROL VALVE (OCV) REMOVAL/INSTALLATION [AJ].) • Inspect position of spool valve in OCV (RH). • Is spool valve located at valve retard position?	Yes	**VARIABLE VALVE TIMING MECHANISM IS NORMAL** **Note** • This DTC is detected by intermittent concern. • Intermittent concern might be removed by cleaning mode of variable valve timing control function. Go to the next step.
		No	Replace OCV, then go to Step 8. (See 01–10C–41 OIL CONTROL VALVE (OCV) REMOVAL/INSTALLATION [AJ].)
7	**INSPECT ENGINE OIL RUNNER** • Inspect the following engine oil runners for clogging or leakage: — Between oil pressure switch and OCV (RH) — Between OCV (RH) and variable valve timing actuator (RH) — In variable valve timing actuator (RH) • Is there any clogging or leakage?	Yes	Repair or replace suspected runner, then go to the next step.
		No	**VARIABLE VALVE TIMING MECHANISM IS NORMAL** **Note** • This DTC is detected by intermittent concern. • Intermittent concern might be removed by cleaning mode of variable valve timing control function. Go to the next step.
8	**VERIFY TROUBLESHOOTING OF DTC P0012 COMPLETED** • Make sure to reconnect all disconnected connectors. • Clear the DTC from the PCM memory using the WDS or equivalent. • Perform the KOER SELF TEST using the WDS or equivalent. • Is the PENDING CODE same DTC present?	Yes	Replace PCM, then go to the next step. (See 01–40C–5 PCM REMOVAL/INSTALLATION [AJ].)
		No	Go to the next step.
9	**VERIFY AFTER REPAIR PROCEDURE** • Perform "AFTER REPAIR PROCEDURE". (See 01–02C–7 AFTER REPAIR PROCEDURE [AJ].) • Are any DTCs present?	Yes	Go to applicable DTC troubleshooting. (See 01–02C–13 DTC TABLE [AJ].)
		No	Troubleshooting completed.

DTC P0016, P0018 [AJ]

E6U010200000WC9

DTC P0016 DTC P0018	CKP-CMP correlation (RH) CKP-CMP correlation (LH)
DETECTION CONDITION	• The PCM monitors the input pulses from the CKP sensor and CMP sensor (RH, LH). If the input pulse pic up timing do not match each other, the PCM determines that the camshaft position does not coincide with the crankshaft position. **Diagnostic support note** • This is a continuous monitor (CCM). • MIL illuminates if the PCM detects the above malfunction condition in two consecutive drive cycles or in one drive cycle while the DTC for the same malfunction has been stored in the PCM. • PENDING CODE is available if the PCM detects the above malfunction condition during the first drive cycle. • FREEZE FRAME DATA is available. • The DTC is stored in the PCM memory.
POSSIBLE CAUSE	• Poor connection of connector • CMP sensor (RH, LH) malfunction • CKP sensor malfunction • Damaged or scratched CMP sensor (RH, LH) pulse wheel • Damaged or scratched CKP sensor pulse wheel • Foreign material on CMP sensor (RH, LH) • Foreign material on CKP sensor • Improper valve timing

Diagnostic procedure

STEP	INSPECTION		ACTION
1	**VERIFY FREEZE FRAME DATA HAS BEEN RECORDED** • Has FREEZE FRAME DATA been recorded?	Yes	Go to the next step.
		No	Record the FREEZE FRAME DATA on the repair order, then go to the next step.
2	**VERIFY RELATED REPAIR INFORMATION AVAILABILITY** • Verify related Service Bulletins and/or on-line repair information availability. • Is any related repair information available?	Yes	Perform repair or diagnosis according to the available repair information. • If the vehicle is not repaired, go to the next step.
		No	Go to the next step.
3	**INSPECT CMP SENSOR (RH, LH) CONNECTOR FOR POOR CONNECTION** • Turn the ignition switch off. • Disconnect the CMP sensor (RH, LH) connector. • Inspect for poor connection (such as damaged/ pulled-out pins, corrosion). • Is there any malfunction?	Yes	Repair or replace the terminal, then go to Step 13.
		No	Go to the next step.
4	**INSPECT CMP SENSOR (RH, LH) FOR FOREIGN MATERIAL** • Remove the CMP sensor (RH, LH). • Inspect the CMP sensor (RH, LH) for foreign materials. • Is there any foreign material on the CMP sensor (RH, LH)?	Yes	Remove foreign material from the CMP sensor (RH, LH), then go to Step 13.
		No	Go to the next step.
5	**INSPECT CMP SENSOR (RH, LH) PLUSE WHEEL** • Visually inspect the CMP sensor (RH, LH) pulse wheel. • Are there any damage or scratches at the CMP sensor (RH, LH) pulse wheel?	Yes	Replace the camshaft, then go to Step 13. (See 01–10C–24 CYLINDER HEAD GASKET REPLACEMENT [AJ].)
		No	Go to the next step.
6	**INSPECT CMP SENSOR (RH, LH)** • Inspect the CMP sensor (RH, LH). (See 01–40C–39 CAMSHAFT POSITION (CMP) SENSOR INSPECTION [AJ].) • Is the CMP sensor (RH, LH) normal?	Yes	Go to the next step.
		No	Replace the CMP sensor (RH, LH), then go to Step 13.

STEP	INSPECTION		ACTION
7	**INSPECT CKP SENSOR CONNECTOR FOR POOR CONNECTION** • Turn the ignition switch off. • Disconnect the CKP sensor connector. • Inspect for poor connection (such as damaged/ pulled-out pins, corrosion). • Is there any malfunction?	Yes	Repair or replace the terminal, then go to Step 13.
		No	Go to the next step.
8	**INSPECT CKP SENSOR FOR FOREIGN MATERIAL** • Remove the CKP sensor. • Inspect the CKP sensor for foreign material. • Is there any foreign material on the CKP sensor?	Yes	Remove foreign material from the CKP sensor, then go to Step 13.
		No	Go to the next step.
9	**INSPECT CKP SENSOR PLUSE WHEEL** • Visually inspect the CKP sensor pulse wheel. • Are there any damage or scratches on the CKP sensor pulse wheel?	Yes	Replace the CKP sensor pulse wheel, then go to Step 13. (See 01–10C–6 TIMING CHAIN REMOVAL/ INSTALLATION [AJ].)
		No	Go to the next step.
10	**INSPECT CKP SENSOR** • Inspect the CKP sensor. (See 01–40C–41 CRANKSHAFT POSITION (CKP) SENSOR INSPECTION [AJ].) • Is the CKP sensor normal?	Yes	Go to the next step.
		No	Replace the CKP sensor, then go to Step 13. (See 01–40C–40 CRANKSHAFT POSITION (CKP) SENSOR REMOVAL/INSTALLATION [AJ].)
11	**INSPECT PCM CONNECTOR FOR POOR CONNECTION** • Turn the ignition switch off. • Disconnect the PCM sensor connector. • Inspect for poor connection (such as damaged/ pulled-out pins, corrosion). • Is there any malfunction?	Yes	Repair or replace the terminal, then go to Step 13.
		No	Go to the next step.
12	**INSPECT VALVE TIMING** • Inspect valve timing. (See 01–10C–6 TIMING CHAIN REMOVAL/INSTALLATION [AJ].) • Is valve timing normal?	Yes	Go to the next step.
		No	Adjust the valve timing properly, then go to the next step. (See 01–10C–6 TIMING CHAIN REMOVAL/ INSTALLATION [AJ].)
13	**VERIFY TROUBLESHOOTING OF DTC P0016, P0018 COMPLETED** • Make sure to reconnect all disconnected connectors. • Clear the DTC from the PCM memory using the WDS or equivalent. • Run Drive Mode 1 and 3. (See 01–02C–8 OBD-II DRIVE MODE [AJ].) • Is the PENDING CODE same DTC present?	Yes	Replace PCM, then go to the next step. (See 01–40C–5 PCM REMOVAL/INSTALLATION [AJ].)
		No	Go to the next step.
14	**VERIFY AFTER REPAIR PROCEDURE** • Perform "AFTER REPAIR PROCEDURE". (See 01–02C–7 AFTER REPAIR PROCEDURE [AJ].) • Is there any DTC present?	Yes	Go to applicable DTC inspection. (See 01–02C–13 DTC TABLE [AJ].)
		No	Troubleshooting completed.

DTC P0021 [AJ]

E6U010200000W18

DTC P0021	CMP timing over-advanced (LH)
DETECTION CONDITION	• The actual valve timing is over-advanced by **20°** from the target valve timing when the OCV is controlled in the maximum valve timing retard condition. **MONITORING CONDITIONS** — Engine coolant temperature is **above 63 °C {145 °F}** **Diagnostic support note** • This is a continuous monitor (CCM). • MIL illuminates if the PCM detects the above malfunction condition during the first drive cycle. • FREEZE FRAME DATA is available. • DTC is stored in PCM memory.
POSSIBLE CAUSE	• Oil control valve malfunction • Spool valve in OCV (LH) is stuck in advance position. • Variable valve timing actuator (LH) is stuck in advance position. • Loose timing chain or improper valve timing • PCM malfunction

Diagnostic procedure

STEP	INSPECTION		ACTION
1	**VERIFY FREEZE FRAME DATA HAS BEEN RECORDED** • Has FREEZE FRAME DATA been recorded?	Yes	Go to the next step.
		No	Record FREEZE FRAME DATA on repair order, then go to the next step.
2	**VERIFY RELATED REPAIR INFORMATION AVAILABILITY** • Check for related Service Bulletins and/or on-line repair information availability. • Is any related repair information available?	Yes	Perform repair or diagnosis according to the available repair information. • If the vehicle is not repaired, go to the next step.
		No	Go to the next step.
3	**INSPECT OCV (LH) FOR MALFUNCTION** • Start engine. • Increase engine speed. • Stop engine. • Remove OCV (LH). (See 01–10C–41 OIL CONTROL VALVE (OCV) REMOVAL/INSTALLATION [AJ].) • Inspect position of spool valve in OCV (LH). • Is spool valve located at valve retard position?	Yes	Go to the next step.
		No	Replace OCV (LH), then go to Step 6. (See 01–10C–41 OIL CONTROL VALVE (OCV) REMOVAL/INSTALLATION [AJ].)
4	**INSPECT STOPPER PIN MECHANISM** • Remove timing chain. • Inspect stopper pin. (See 01–10C–40 VARIABLE VALVE TIMING ACTUATOR INSPECTION [AJ].) • Is stopper pin mechanism normal?	Yes	Go to the next step.
		No	Replace variable valve timing actuator (LH), then go to Step 6. (See 01–10C–40 VARIABLE VALVE TIMING ACTUATOR REMOVAL/INSTALLATION [AJ].)
5	**INSPECT ROTOR POSITION** • Remove variable valve timing actuator (LH). (See 01–10C–40 VARIABLE VALVE TIMING ACTUATOR REMOVAL/INSTALLATION [AJ].) • Is rotor position at maximum valve timing retard?	Yes	**VARIABLE VALVE TIMING MECHANISM IS NORMAL** **Note** • This DTC is detected by intermittent concern. • Intermittent concern might be removed by cleaning mode of variable valve timing control function. Go to the next step.
		No	Replace variable valve timing actuator, go to the next step. (See 01–10C–40 VARIABLE VALVE TIMING ACTUATOR REMOVAL/INSTALLATION [AJ].)
6	**VERIFY TROUBLESHOOTING OF DTC P0021 COMPLETED** • Make sure to reconnect all disconnected connectors. • Clear the DTC from the PCM memory using the WDS or equivalent. • Perform the KOER SELF TEST using the WDS or equivalent. • Is the PENDING CODE same DTC present?	Yes	Replace PCM, then go to the next step. (See 01–40C–5 PCM REMOVAL/INSTALLATION [AJ].)
		No	Go to the next step.
7	**VERIFY AFTER REPAIR PROCEDURE** • Perform "AFTER REPAIR PROCEDURE". (See 01–02C–7 AFTER REPAIR PROCEDURE [AJ].) • Are any DTCs present?	Yes	Go to applicable DTC troubleshooting. (See 01–02C–13 DTC TABLE [AJ].)
		No	Troubleshooting completed.

DTC P0022 [AJ]

E6U010200000W19

DTC P0022	CMP timing over-retarded (LH)
DETECTION CONDITION	• The actual valve timing is over-retarded by **10°** from the target valve timing for **4 s** when the OCV system control is within the feed-back range. **MONITORING CONDITIONS** — Engine coolant temperature is **above 63 °C {145 °F}** **Diagnostic support note** • This is a continuous monitor (CCM). • MIL illuminates if the PCM detects the above malfunction condition in two consecutive drive cycles or in one drive cycle while the DTC for the same malfunction has been stored in the PCM. • PENDING CODE is available if the PCM detects the above malfunction condition during the first drive cycle. • FREEZE FRAME DATA is available. • DTC is stored in PCM memory.
POSSIBLE CAUSE	• Low engine oil pressure • Oil control valve malfunction • Loose timing chain or improper valve timing • Spool valve in OCV (LH) is stuck in retard position. • The following oil runners are clogged or have leakage: — Between oil pressure switch and OCV (LH) — Between OCV (LH) and variable valve timing actuator (LH) — In variable valve timing actuator (LH) • Variable valve timing actuator (LH) is stuck in retard position. • PCM malfunction

Diagnostic procedure

STEP	INSPECTION		ACTION
1	**VERIFY FREEZE FRAME DATA HAS BEEN RECORDED** • Has FREEZE FRAME DATA been recorded?	Yes	Go to the next step.
		No	Record FREEZE FRAME DATA on repair order, then go to the next step.
2	**VERIFY RELATED REPAIR INFORMATION AVAILABILITY** • Check for related Service Bulletins and/or on-line repair information availability. • Is any related repair information available?	Yes	Perform repair or diagnosis according to the available repair information. • If the vehicle is not repaired, go to the next step.
		No	Go to the next step.
3	**VERIFY RELATED PENDING CODE OR STORED DTCs** • Is DTC P2092 or P2093 present?	Yes	Go to appropriate DTC troubleshooting procedure. (See 01–02C–13 DTC TABLE [AJ].)
		No	Go to the next step.
4	**VERIFY ENGINE OIL PRESSURE** • Start engine. • Does oil pressure warning light illuminate?	Yes	Inspect engine oil pressure. (See 01–11A–5 OIL PRESSURE INSPECTION [L3, AJ].)
		No	Go to the next step.
5	**VERIFY TIMING CHAIN INSTALLATION** • Stop engine. • Remove timing chain cover. • Is camshaft timing mark at correct point? (See 01–10C–6 TIMING CHAIN REMOVAL/ INSTALLATION [AJ].)	Yes	Go to the next step.
		No	Reinstall timing chain, then go to Step 8. (See 01–10C–6 TIMING CHAIN REMOVAL/ INSTALLATION [AJ].)
6	**INSPECT OCV (LH) FOR MALFUNCTION** • Stop engine. • Remove OCV (LH). (See 01–10C–41 OIL CONTROL VALVE (OCV) REMOVAL/INSTALLATION [AJ].) • Inspect position of spool valve in OCV (LH). • Is spool valve located at valve retard position?	Yes	**VARIABLE VALVE TIMING MECHANISM IS NORMAL** **Note** • This DTC is detected by intermittent concern. • Intermittent concern might be removed by cleaning mode of variable valve timing control function. Go to the next step.
		No	Replace OCV (LH), then go to Step 8. (See 01–10C–41 OIL CONTROL VALVE (OCV) REMOVAL/INSTALLATION [AJ].)
7	**INSPECT ENGINE OIL RUNNER** • Inspect the following engine oil runners for clogging or leakage: — Between oil pressure switch and OCV (LH) — Between OCV (LH) and variable valve timing actuator (LH) — In variable valve timing actuator (LH) • Is there any clogging or leakage?	Yes	Repair or replace suspected runner, then go to the next step.
		No	**VARIABLE VALVE TIMING MECHANISM IS NORMAL** **Note** • This DTC is detected by intermittent concern. • Intermittent concern might be removed by cleaning mode of variable valve timing control function. Go to the next step.
8	**VERIFY TROUBLESHOOTING OF DTC P0022 COMPLETED** • Make sure to reconnect all disconnected connectors. • Clear the DTC from the PCM memory using the WDS or equivalent. • Perform the KOER SELF TEST using the WDS or equivalent. • Is the PENDING CODE same DTC present?	Yes	Replace PCM, then go to the next step. (See 01–40C–5 PCM REMOVAL/INSTALLATION [AJ].)
		No	Go to the next step.
9	**VERIFY AFTER REPAIR PROCEDURE** • Perform "AFTER REPAIR PROCEDURE". (See 01–02C–7 AFTER REPAIR PROCEDURE [AJ].) • Are any DTCs present?	Yes	Go to applicable DTC troubleshooting. (See 01–02C–13 DTC TABLE [AJ].)
		No	Troubleshooting completed.

DTC P0031 [AJ]

E6U010200000W20

DTC P0031	HO2S heater (RF) circuit low
DETECTION CONDITION	• The PCM monitors the HO2S heater (RF) control signal at PCM terminal 2AW. If the PCM turns the HO2S heater (RF) off but the HO2S heater (RF) circuit remains low voltage, the PCM determines that the HO2S heater (RF) circuit has a malfunction. **Note** • HO2S heater (RF) is controlled by a duty signal. **Diagnostic support note** • This is a continuous monitor (HO2S heater). • MIL illuminates if the PCM detects the above malfunction condition in two consecutive drive cycles or in one drive cycle while the DTC for the same malfunction has been stored in the PCM. • PENDING CODE is available if the PCM detects the above malfunction condition during the first drive cycle. • FREEZE FRAME DATA is available. • DTC is stored in PCM memory.
POSSIBLE CAUSE	• HO2S heater (RF) malfunction • Connector or terminal malfunction • Open circuit between ignition switch and HO2S (RF) terminal C • Short to ground circuit between HO2S (RF) terminal D and PCM terminal 2AW • Open circuit between HO2S (RF) terminal D and PCM terminal 2AW • PCM malfunction

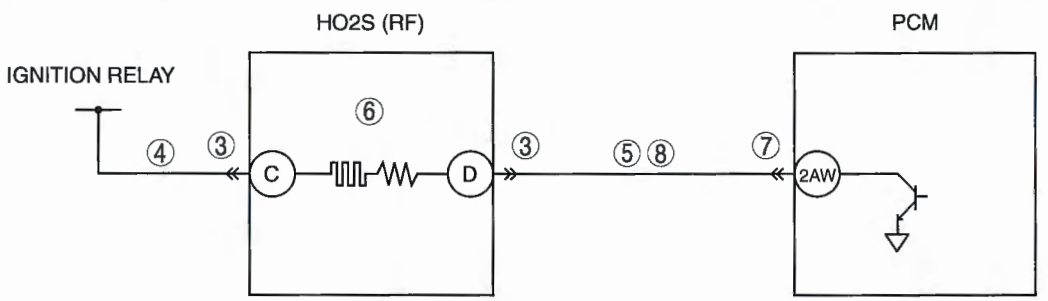

HO2S (RF)
HARNESS SIDE CONNECTOR



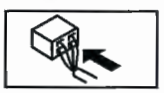

PCM
WIRING HARNESS-SIDE CONNECTOR

2BE	2BA	2AW	2AS	2AO	2AK	2AG	2AC	2Y	2U	2Q	2M	2I	2E	2A
2BF	2BB	2AX	2AT	2AP	2AL	2AH	2AD	2Z	2V	2R	2N	2J	2F	2B
2BG	2BC	2AY	2AU	2AQ	2AM	2AI	2AE	2AA	2W	2S	2O	2K	2G	2C
2BH	2BD	2AZ	2AV	2AR	2AN	2AJ	2AF	2AB	2X	2T	2P	2L	2H	2D

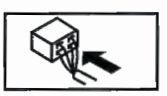

Diagnostic procedure

STEP	INSPECTION		ACTION
1	**VERIFY FREEZE FRAME DATA AND DIAGNOSTIC MONITORING TEST RESULTS HAVE BEEN RECORDED** • Have FREEZE FRAME DATA and DIAGNOSTIC MONITORING TEST RESULTS (HO2S heater related) been recorded?	Yes	Go to the next step.
		No	Record FREEZE FRAME DATA and DIAGNOSTIC MONITORING TEST RESULTS on repair order, then go to the next step.
2	**VERIFY RELATED REPAIR INFORMATION AVAILABILITY** • Check for related Service Bulletins and/or on-line repair information availability. • Is any related repair information available?	Yes	Perform repair or diagnosis according to the available repair information. • If the vehicle is not repaired, go to the next step.
		No	Go to the next step.
3	**INSPECT HO2S (RF) CONNECTOR FOR POOR CONNECTION** • Turn the ignition switch off. • Disconnect HO2S (RF) connector. • Check for poor connection (such as damaged, pulled-out pins, and corrosion). • Is there any malfunction?	Yes	Repair or replace the terminal, then go to Step 9.
		No	Go to the next step.
4	**INSPECT HO2S HEATER (RF) POWER CIRCUIT FOR OPEN CIRCUIT** • Turn the ignition switch to the ON position. • Measure voltage between HO2S (RF) terminal C and body ground. • Is voltage **B+**?	Yes	Go to the next step.
		No	Repair or replace harness for open circuit, then go to Step 9.
5	**INSPECT HO2S HEATER (RF) CONTROL CIRCUIT FOR SHORT TO GROUND** • Turn the ignition switch off. • Check continuity between HO2S (RF) terminal D and body ground. • Is there continuity?	Yes	Repair or replace harness for short to ground, then go to Step 9.
		No	Go to the next step.
6	**INSPECT HO2S HEATER (RF)** • Inspect HO2S heater (RF). (See 01–40C–33 HEATED OXYGEN SENSOR (HO2S) INSPECTION [AJ].) • Is there any malfunction?	Yes	Replace HO2S (RF), then go to Step 9. (See 01–15C–2 EXHAUST SYSTEM REMOVAL/INSTALLATION [AJ].)
		No	Go to the next step.
7	**INSPECT PCM CONNECTOR FOR POOR CONNECTION** • Turn the ignition switch off. • Disconnect PCM connector. • Check for poor connection (such as damaged, pulled-out pins, and corrosion). • Is there any malfunction?	Yes	Repair or replace the terminal, then go to Step 9.
		No	Go to the next step.
8	**INSPECT HO2S HEATER (RF) CONTROL CIRCUIT FOR OPEN CIRCUIT** • Turn the ignition switch off. • Check continuity between HO2S (RF) terminal D and PCM terminal 2AW. • Is there continuity?	Yes	Go to the next step.
		No	Repair or replace harness for open circuit, then go to Step 9.
9	**VERIFY TROUBLESHOOTING OF DTC P0031 COMPLETED** • Make sure to reconnect all disconnected connectors. • Clear DTC from PCM memory using WDS or equivalent. • Perform the KOEO or KOER SELF TEST using the WDS or equivalent. (See 01–02C–8 KOEO/KOER SELF TEST [AJ].) • Is the PENDING CODE same DTC present?	Yes	Replace PCM, then go to the next step. (See 01–40C–5 PCM REMOVAL/INSTALLATION [AJ].)
		No	Go to the next step.
10	**VERIFY AFTER REPAIR PROCEDURE** • Perform "AFTER REPAIR PROCEDURE". (See 01–02C–7 AFTER REPAIR PROCEDURE [AJ].) • Are any DTCs present?	Yes	Go to the applicable DTC inspection. (See 01–02C–13 DTC TABLE [AJ].)
		No	Troubleshooting completed.

DTC P0032 [AJ]

E6U010200000W21

DTC P0032	HO2S heater (RF) circuit high
DETECTION CONDITION	• The PCM monitors the HO2S heater (RF) control signal at PCM terminal 2AW. If the PCM turns the HO2S heater (RF) on but the HO2S heater (RF) circuit remains high voltage, the PCM determines that the HO2S heater (RF) circuit has a malfunction. **Note** • HO2S heater (RF) is controlled by a duty signal. **Diagnostic support note** • This is a continuous monitor (HO2S heater). • MIL illuminates if the PCM detects the above malfunction condition in two consecutive drive cycles or in one drive cycle while the DTC for the same malfunction has been stored in the PCM. • PENDING CODE is available if the PCM detects the above malfunction condition during the first drive cycle. • FREEZE FRAME DATA is available. • DTC is stored in PCM memory.
POSSIBLE CAUSE	• HO2S heater (RF) malfunction • Connector or terminal malfunction • Short to power circuit between HO2S (RF) terminal D and PCM terminal 2AW • PCM malfunction

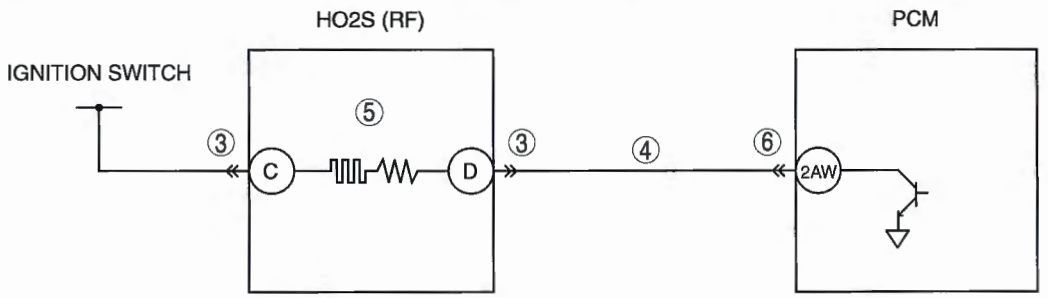

HO2S (RF)
HARNESS SIDE CONNECTOR

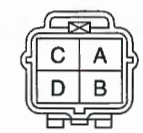

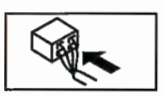

PCM
WIRING HARNESS-SIDE CONNECTOR

2BE	2BA	2AW	2AS	2AO	2AK	2AG	2AC	2Y	2U	2Q	2M	2I	2E	2A
2BF	2BB	2AX	2AT	2AP	2AL	2AH	2AD	2Z	2V	2R	2N	2J	2F	2B
2BG	2BC	2AY	2AU	2AQ	2AM	2AI	2AE	2AA	2W	2S	2O	2K	2G	2C
2BH	2BD	2AZ	2AV	2AR	2AN	2AJ	2AF	2AB	2X	2T	2P	2L	2H	2D

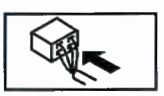

Diagnostic procedure

STEP	INSPECTION		ACTION
1	**VERIFY FREEZE FRAME DATA AND DIAGNOSTIC MONITORING TEST RESULTS HAVE BEEN RECORDED** • Have FREEZE FRAME DATA and DIAGNOSTIC MONITORING TEST RESULTS (HO2S heater related) been recorded?	Yes	Go to the next step.
		No	Record FREEZE FRAME DATA and DIAGNOSTIC MONITORING TEST RESULTS on repair order, then go to the next step.
2	**VERIFY RELATED REPAIR INFORMATION AVAILABILITY** • Check for related Service Bulletins and/or on-line repair information availability. • Is any related repair information available?	Yes	Perform repair or diagnosis according to the available repair information. • If the vehicle is not repaired, go to the next step.
		No	Go to the next step.
3	**INSPECT HO2S (RF) CONNECTOR FOR POOR CONNECTION** • Turn the ignition switch off. • Disconnect HO2S (RF) connector. • Check for poor connection (such as damaged, pulled-out pins, and corrosion). • Is there any malfunction?	Yes	Repair or replace the terminal, then go to Step 7.
		No	Go to the next step.
4	**INSPECT HO2S HEATER (RF) CONTROL CIRCUIT FOR SHORT TO POWER** • Turn the ignition switch to the ON position. • Measure voltage between HO2S (RF) terminal D and body ground. • Is voltage **B+**?	Yes	Repair or replace harness for shot to power, then go to Step 7.
		No	Go to the next step.
5	**INSPECT HO2S HEATER (RF)** • Inspect HO2S heater (RF). (See 01–40C–33 HEATED OXYGEN SENSOR (HO2S) INSPECTION [AJ].) • Is there any malfunction?	Yes	Replace HO2S (RF), then go to Step 7. (See 01–15C–2 EXHAUST SYSTEM REMOVAL/INSTALLATION [AJ].)
		No	Go to the next step.
6	**INSPECT PCM CONNECTOR FOR POOR CONNECTION** • Turn the ignition switch off. • Disconnect PCM connector. • Check for poor connection (such as damaged, pulled-out pins, and corrosion). • Is there any malfunction?	Yes	Repair or replace the terminal, then go to the next step.
		No	Go to the next step.
7	**VERIFY TROUBLESHOOTING OF DTC P0032 COMPLETED** • Make sure to reconnect all disconnected connectors. • Clear DTC from PCM memory using WDS or equivalent. • Perform the KOEO or KOER SELF TEST using the WDS or equivalent. (See 01–02C–8 KOEO/KOER SELF TEST [AJ].) • Is the PENDING CODE same DTC present?	Yes	Replace PCM, then go to the next step. (See 01–40C–5 PCM REMOVAL/INSTALLATION [AJ].)
		No	Go to the next step.
8	**VERIFY AFTER REPAIR PROCEDURE** • Perform "AFTER REPAIR PROCEDURE". (See 01–02C–7 AFTER REPAIR PROCEDURE [AJ].) • Are any DTCs present?	Yes	Go to the applicable DTC inspection. (See 01–02C–13 DTC TABLE [AJ].)
		No	Troubleshooting completed.

DTC P0037 [AJ]

E6U010200000W22

DTC P0037	HO2S heater (RR) circuit low
DETECTION CONDITION	• The PCM monitors the HO2S heater (RR) control signal at PCM terminal 2AT. If the PCM turns the HO2S heater (RR) off but the HO2S heater (RR) circuit remains low voltage, the PCM determines that the HO2S heater (RR) circuit has a malfunction. **Diagnostic support note** • This is a continuous monitor (HO2S heater). • MIL illuminates if the PCM detects the above malfunction condition in two consecutive drive cycles or in one drive cycle while the DTC for the same malfunction has been stored in the PCM. • PENDING CODE is available if the PCM detects the above malfunction condition during the first drive cycle. • FREEZE FRAME DATA is available. • DTC is stored in PCM memory.
POSSIBLE CAUSE	• HO2S heater (RR) malfunction • Connector or terminal malfunction • Open circuit between ignition switch and HO2S (RR) terminal C • Short to ground circuit between HO2S (RR) terminal D and PCM terminal 2AT • Open circuit between HO2S (RR) terminal D and PCM terminal 2AT • PCM malfunction

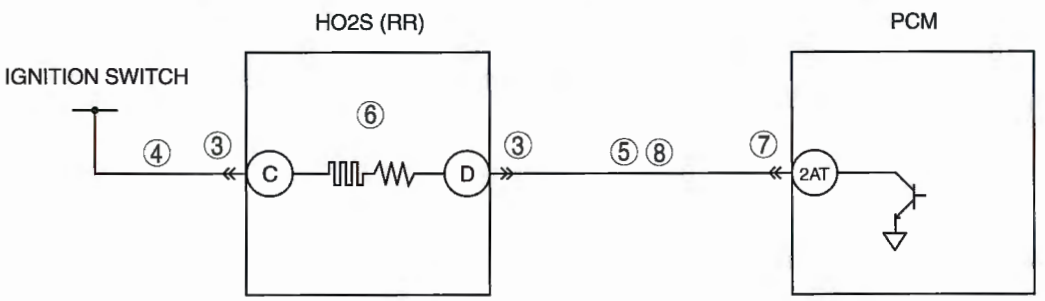

HO2S (RR)
HARNESS SIDE CONNECTOR



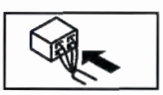

PCM
WIRING HARNESS-SIDE CONNECTOR

2BE	2BA	2AW	2AS	2AO	2AK	2AG	2AC	2Y	2U	2Q	2M	2I	2E	2A
2BF	2BB	2AX	2AT	2AP	2AL	2AH	2AD	2Z	2V	2R	2N	2J	2F	2B
2BG	2BC	2AY	2AU	2AQ	2AM	2AI	2AE	2AA	2W	2S	2O	2K	2G	2C
2BH	2BD	2AZ	2AV	2AR	2AN	2AJ	2AF	2AB	2X	2T	2P	2L	2H	2D

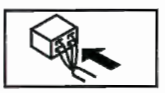

Diagnostic procedure

STEP	INSPECTION		ACTION
1	**VERIFY FREEZE FRAME DATA AND DIAGNOSTIC MONITORING TEST RESULTS HAVE BEEN RECORDED** • Have FREEZE FRAME DATA and DIAGNOSTIC MONITORING TEST RESULTS (HO2S heater related) been recorded?	Yes	Go to the next step.
		No	Record FREEZE FRAME DATA and DIAGNOSTIC MONITORING TEST RESULTS on repair order, then go to the next step.
2	**VERIFY RELATED REPAIR INFORMATION AVAILABILITY** • Check for related Service Bulletins and/or on-line repair information availability. • Is any related repair information available?	Yes	Perform repair or diagnosis according to the available repair information. • If the vehicle is not repaired, go to the next step.
		No	Go to the next step.
3	**INSPECT HO2S (RR) CONNECTOR FOR POOR CONNECTION** • Turn the ignition switch off. • Disconnect HO2S (RR) connector. • Check for poor connection (such as damaged, pulled-out pins, and corrosion). • Is there any malfunction?	Yes	Repair or replace the terminal, then go to Step 9.
		No	Go to the next step.
4	**INSPECT HO2S HEATER (RR) POWER CIRCUIT FOR OPEN CIRCUIT** • Turn the ignition switch to the ON position. • Measure voltage between HO2S (RR) terminal C and body ground. • Is voltage **B+**?	Yes	Go to the next step.
		No	Repair or replace harness for open circuit, then go to Step 9.
5	**INSPECT HO2S HEATER (RR) CONTROL CIRCUIT FOR SHORT TO GROUND** • Turn the ignition switch off. • Check continuity between HO2S (RR) terminal D and body ground. • Is there continuity?	Yes	Repair or replace harness for short to ground, then go to Step 9.
		No	Go to the next step.
6	**INSPECT HO2S HEATER (RR)** • Inspect HO2S heater (RR). (See 01–40C–33 HEATED OXYGEN SENSOR (HO2S) INSPECTION [AJ].) • Is there any malfunction?	Yes	Replace HO2S (RR), then go to Step 9. (See 01–15C–2 EXHAUST SYSTEM REMOVAL/ INSTALLATION [AJ].)
		No	Go to the next step.
7	**INSPECT PCM CONNECTOR FOR POOR CONNECTION** • Turn the ignition switch off. • Disconnect PCM connector. • Check for poor connection (such as damaged, pulled-out pins, and corrosion). • Is there any malfunction?	Yes	Repair or replace the terminal, then go to Step 9.
		No	Go to the next step.
8	**INSPECT HO2S HEATER (RR) CONTROL CIRCUIT FOR OPEN CIRCUIT** • Turn the ignition switch off. • Check continuity between HO2S (RR) terminal D and PCM terminal 2AT. • Is there continuity?	Yes	Go to the next step.
		No	Repair or replace harness for open circuit, then go to the next step.
9	**VERIFY TROUBLESHOOTING OF DTC P0037 COMPLETED** • Make sure to reconnect all disconnected connectors. • Clear DTC from PCM memory using WDS or equivalent. • Perform the KOEO or KOER SELF TEST using the WDS or equivalent. (See 01–02C–8 KOEO/KOER SELF TEST [AJ].) • Is the PENDING CODE same DTC present?	Yes	Replace PCM, then go to the next step. (See 01–40C–5 PCM REMOVAL/INSTALLATION [AJ].)
		No	Go to the next step.
10	**VERIFY AFTER REPAIR PROCEDURE** • Perform "AFTER REPAIR PROCEDURE". (See 01–02C–7 AFTER REPAIR PROCEDURE [AJ].) • Are any DTCs present?	Yes	Go to the applicable DTC inspection. (See 01–02C–13 DTC TABLE [AJ].)
		No	Troubleshooting completed.

DTC P0038 [AJ]

E6U010200000W23

DTC P0038	HO2S heater (RR) circuit high
DETECTION CONDITION	• The PCM monitors the HO2S heater (RR) control signal at PCM terminal 2AT. If the PCM turns the HO2S heater (RR) on but the HO2S heater (RR) circuit remains high voltage, the PCM determines that the HO2S heater (RR) circuit has a malfunction. **Diagnostic support note** • This is a continuous monitor (HO2S heater). • MIL illuminates if the PCM detects the above malfunction condition in two consecutive drive cycles or in one drive cycle while the DTC for the same malfunction has been stored in the PCM. • PENDING CODE is available if the PCM detects the above malfunction condition during the first drive cycle. • FREEZE FRAME DATA is available. • DTC is stored in PCM memory.
POSSIBLE CAUSE	• HO2S heater (RR) malfunction • Connector or terminal malfunction • Short to power circuit between HO2S (RR) terminal D and PCM terminal 2AT • PCM malfunction

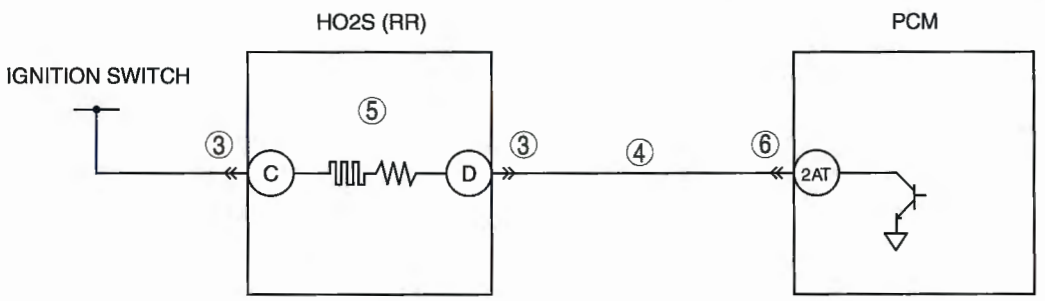

HO2S (RR)
HARNESS SIDE CONNECTOR



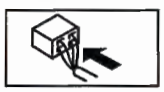

PCM
WIRING HARNESS-SIDE CONNECTOR

2BE	2BA	2AW	2AS	2AO	2AK	2AG	2AC	2Y	2U	2Q	2M	2I	2E	2A
2BF	2BB	2AX	2AT	2AP	2AL	2AH	2AD	2Z	2V	2R	2N	2J	2F	2B
2BG	2BC	2AY	2AU	2AQ	2AM	2AI	2AE	2AA	2W	2S	2O	2K	2G	2C
2BH	2BD	2AZ	2AV	2AR	2AN	2AJ	2AF	2AB	2X	2T	2P	2L	2H	2D

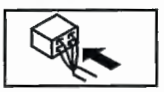

Diagnostic procedure

STEP	INSPECTION		ACTION
1	**VERIFY FREEZE FRAME DATA AND DIAGNOSTIC MONITORING TEST RESULTS HAVE BEEN RECORDED** • Have FREEZE FRAME DATA and DIAGNOSTIC MONITORING TEST RESULTS (HO2S heater related) been recorded?	Yes	Go to the next step.
		No	Record FREEZE FRAME DATA and DIAGNOSTIC MONITORING TEST RESULTS on repair order, then go to the next step.
2	**VERIFY RELATED REPAIR INFORMATION AVAILABILITY** • Check for related Service Bulletins and/or on-line repair information availability. • Is any related repair information available?	Yes	Perform repair or diagnosis according to the available repair information. • If the vehicle is not repaired, go to the next step.
		No	Go to the next step.
3	**INSPECT HO2S (RR) CONNECTOR FOR POOR CONNECTION** • Turn the ignition switch off. • Disconnect HO2S (RR) connector. • Check for poor connection (such as damaged, pulled-out pins, and corrosion). • Is there any malfunction?	Yes	Repair or replace the terminal, then go to Step 7.
		No	Go to the next step.
4	**INSPECT HO2S HEATER (RR) CONTROL CIRCUIT FOR SHORT TO POWER** • Turn the ignition switch to the ON position. • Measure voltage between HO2S (RR) terminal D and body ground. • Is voltage **B+**?	Yes	Repair or replace harness for short to power, then go to Step 7.
		No	Go to the next step.
5	**INSPECT HO2S HEATER (RR)** • Inspect HO2S heater (RR). (See 01–40C–33 HEATED OXYGEN SENSOR (HO2S) INSPECTION [AJ].) • Is there any malfunction?	Yes	Replace HO2S (RR), then go to Step 7. (See 01–15C–2 EXHAUST SYSTEM REMOVAL/INSTALLATION [AJ].)
		No	Go to the next step.
6	**INSPECT PCM CONNECTOR FOR POOR CONNECTION** • Turn the ignition switch off. • Disconnect PCM connector. • Check for poor connection (such as damaged, pulled-out pins, and corrosion). • Is there any malfunction?	Yes	Repair or replace the terminal, then go to the next step.
		No	Go to the next step.
7	**VERIFY TROUBLESHOOTING OF DTC P0038 COMPLETED** • Make sure to reconnect all disconnected connectors. • Clear DTC from PCM memory using WDS or equivalent. • Perform the KOEO or KOER SELF TEST using the WDS or equivalent. (See 01–02C–8 KOEO/KOER SELF TEST [AJ].) • Is the PENDING CODE same DTC present?	Yes	Replace PCM, then go to the next step. (See 01–40C–5 PCM REMOVAL/INSTALLATION [AJ].)
		No	Go to the next step.
8	**VERIFY AFTER REPAIR PROCEDURE** • Perform "AFTER REPAIR PROCEDURE". (See 01–02C–7 AFTER REPAIR PROCEDURE [AJ].) • Are any DTCs present?	Yes	Go to the applicable DTC inspection. (See 01–02C–13 DTC TABLE [AJ].)
		No	Troubleshooting completed.

DTC P0051 [AJ]

E6U010200000W24

DTC P0051	HO2S heater (LF) circuit low
DETECTION CONDITION	• The PCM monitors the HO2S heater (LF) control signal at PCM terminal 2AS. If the PCM turns the HO2S heater (LF) off but the HO2S heater (LF) circuit remains low voltage, the PCM determines that the HO2S heater (LF) circuit has a malfunction. **Note** • HO2S heater (LF) is controlled by a duty signal. **Diagnostic support note** • This is a continuous monitor (HO2S heater). • MIL illuminates if the PCM detects the above malfunction condition in two consecutive drive cycles or in one drive cycle while the DTC for the same malfunction has been stored in the PCM. • PENDING CODE is available if the PCM detects the above malfunction condition during the first drive cycle. • FREEZE FRAME DATA is available. • DTC is stored in PCM memory.
POSSIBLE CAUSE	• HO2S heater (LF) malfunction • Connector or terminal malfunction • Open circuit between ignition switch and HO2S (LF) terminal C • Short to ground circuit between HO2S (LF) terminal D and PCM terminal 2AS • Open circuit between HO2S (LF) terminal D and PCM terminal 2AS • PCM malfunction

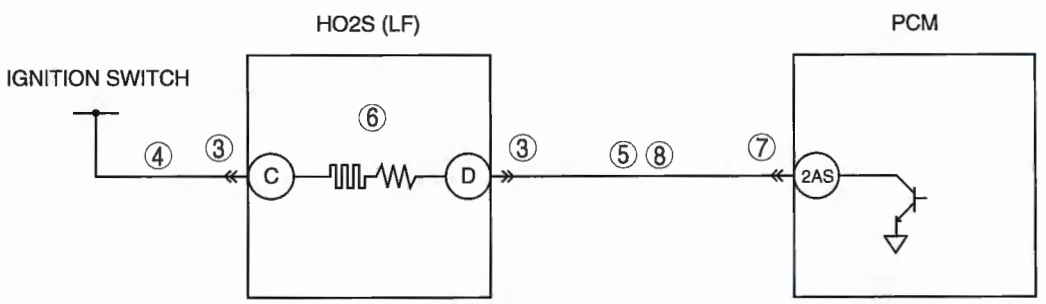

HO2S (LF)
HARNESS SIDE CONNECTOR

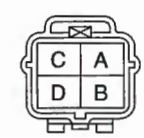

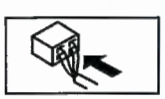

PCM
WIRING HARNESS-SIDE CONNECTOR

2BE	2BA	2AW	2AS	2AO	2AK	2AG	2AC	2Y	2U	2Q	2M	2I	2E	2A
2BF	2BB	2AX	2AT	2AP	2AL	2AH	2AD	2Z	2V	2R	2N	2J	2F	2B
2BG	2BC	2AY	2AU	2AQ	2AM	2AI	2AE	2AA	2W	2S	2O	2K	2G	2C
2BH	2BD	2AZ	2AV	2AR	2AN	2AJ	2AF	2AB	2X	2T	2P	2L	2H	2D

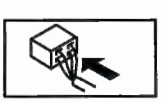

Diagnostic procedure

STEP	INSPECTION		ACTION
1	**VERIFY FREEZE FRAME DATA AND DIAGNOSTIC MONITORING TEST RESULTS HAVE BEEN RECORDED** • Have FREEZE FRAME DATA and DIAGNOSTIC MONITORING TEST RESULTS (HO2S heater related) been recorded?	Yes	Go to the next step.
		No	Record FREEZE FRAME DATA and DIAGNOSTIC MONITORING TEST RESULTS on repair order, then go to the next step.
2	**VERIFY RELATED REPAIR INFORMATION AVAILABILITY** • Check for related Service Bulletins and/or on-line repair information availability. • Is any related repair information available?	Yes	Perform repair or diagnosis according to the available repair information. • If the vehicle is not repaired, go to the next step.
		No	Go to the next step.
3	**INSPECT HO2S (LF) CONNECTOR FOR POOR CONNECTION** • Turn the ignition switch off. • Disconnect HO2S (LF) connector. • Check for poor connection (such as damaged, pulled-out pins, and corrosion). • Is there any malfunction?	Yes	Repair or replace the terminal, then go to Step 9.
		No	Go to the next step.
4	**INSPECT HO2S HEATER (LF) POWER CIRCUIT FOR OPEN CIRCUIT** • Turn the ignition switch to the ON position. • Measure voltage between HO2S (LF) terminal C and body ground. • Is voltage **B+**?	Yes	Go to the next step.
		No	Repair or replace harness for open circuit, then go to Step 9.
5	**INSPECT HO2S HEATER (LF) CONTROL CIRCUIT FOR SHORT TO GROUND** • Turn the ignition switch off. • Check continuity between HO2S (LF) terminal D and body ground. • Is there continuity?	Yes	Repair or replace harness for short to ground, then go to Step 9.
		No	Go to the next step.
6	**INSPECT HO2S HEATER (LF)** • Inspect HO2S heater (LF). (See 01–40C–33 HEATED OXYGEN SENSOR (HO2S) INSPECTION [AJ].) • Is there any malfunction?	Yes	Replace HO2S (LF), then go to Step 9. (See 01–15C–2 EXHAUST SYSTEM REMOVAL/ INSTALLATION [AJ].)
		No	Go to the next step.
7	**INSPECT PCM CONNECTOR FOR POOR CONNECTION** • Turn the ignition switch off. • Disconnect PCM connector. • Check for poor connection (such as damaged, pulled-out pins, and corrosion). • Is there any malfunction?	Yes	Repair or replace the terminal, then go to Step 9.
		No	Go to the next step.
8	**INSPECT HO2S HEATER (LF) CONTROL CIRCUIT FOR OPEN CIRCUIT** • Turn the ignition switch off. • Check continuity between HO2S (LF) terminal D and PCM terminal 2AS. • Is there continuity?	Yes	Go to the next step.
		No	Repair or replace harness for open circuit, then go to Step 9.
9	**VERIFY TROUBLESHOOTING OF DTC P0051 COMPLETED** • Make sure to reconnect all disconnected connectors. • Clear DTC from PCM memory using WDS or equivalent. • Perform the KOEO or KOER SELF TEST using the WDS or equivalent. (See 01–02C–8 KOEO/KOER SELF TEST [AJ].) • Is the PENDING CODE same DTC present?	Yes	Replace PCM, then go to the next step. (See 01–40C–5 PCM REMOVAL/INSTALLATION [AJ].)
		No	Go to the next step.
10	**VERIFY AFTER REPAIR PROCEDURE** • Perform "AFTER REPAIR PROCEDURE". (See 01–02C–7 AFTER REPAIR PROCEDURE [AJ].) • Are any DTCs present?	Yes	Go to the applicable DTC inspection. (See 01–02C–13 DTC TABLE [AJ].)
		No	Troubleshooting completed.

DTC P0052 [AJ]

E6U010200000W25

DTC P0052	HO2S heater (LF) circuit high
DETECTION CONDITION	• The PCM monitors the HO2S heater (LF) control signal at PCM terminal 2AS. If the PCM turns the HO2S heater (LF) on but the HO2S heater (LF) circuit remains high voltage, the PCM determines that the HO2S heater (LF) circuit has a malfunction. **Note** • HO2S heater (LF) is controlled by a duty signal. **Diagnostic support note** • This is a continuous monitor (HO2S heater). • MIL illuminates if the PCM detects the above malfunction condition in two consecutive drive cycles or in one drive cycle while the DTC for the same malfunction has been stored in the PCM. • PENDING CODE is available if the PCM detects the above malfunction condition during the first drive cycle. • FREEZE FRAME DATA is available. • DTC is stored in PCM memory.
POSSIBLE CAUSE	• HO2S heater (LF) malfunction • Connector or terminal malfunction • Short to power circuit between HO2S (LF) terminal D and PCM terminal 2AS • PCM malfunction

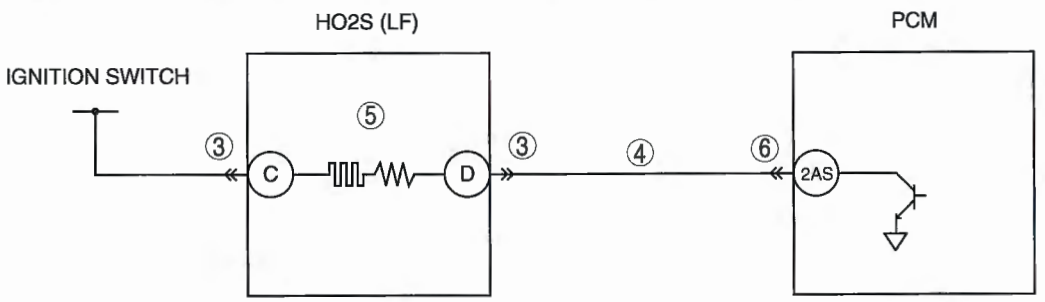

HO2S (LF)
HARNESS SIDE CONNECTOR

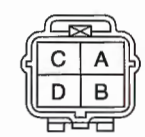

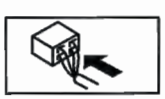

PCM
WIRING HARNESS-SIDE CONNECTOR

2BE	2BA	2AW	2AS	2AO	2AK	2AG	2AC	2Y	2U	2Q	2M	2I	2E	2A
2BF	2BB	2AX	2AT	2AP	2AL	2AH	2AD	2Z	2V	2R	2N	2J	2F	2B
2BG	2BC	2AY	2AU	2AQ	2AM	2AI	2AE	2AA	2W	2S	2O	2K	2G	2C
2BH	2BD	2AZ	2AV	2AR	2AN	2AJ	2AF	2AB	2X	2T	2P	2L	2H	2D

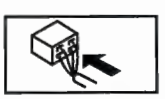

Diagnostic procedure

STEP	INSPECTION		ACTION
1	**VERIFY FREEZE FRAME DATA AND DIAGNOSTIC MONITORING TEST RESULTS HAVE BEEN RECORDED** • Have FREEZE FRAME DATA and DIAGNOSTIC MONITORING TEST RESULTS (HO2S heater related) been recorded?	Yes	Go to the next step.
		No	Record FREEZE FRAME DATA and DIAGNOSTIC MONITORING TEST RESULTS on repair order, then go to the next step.
2	**VERIFY RELATED REPAIR INFORMATION AVAILABILITY** • Check for related Service Bulletins and/or on-line repair information availability. • Is any related repair information available?	Yes	Perform repair or diagnosis according to the available repair information. • If the vehicle is not repaired, go to the next step.
		No	Go to the next step.
3	**INSPECT HO2S (LF) CONNECTOR FOR POOR CONNECTION** • Turn the ignition switch off. • Disconnect HO2S (LF) connector. • Check for poor connection (such as damaged, pulled-out pins, and corrosion). • Is there any malfunction?	Yes	Repair or replace the terminal, then go to Step 7.
		No	Go to the next step.
4	**INSPECT HO2S HEATER (LF) CONTROL CIRCUIT FOR SHORT TO POWER** • Turn the ignition switch to the ON position. • Measure voltage between HO2S (LF) terminal D and body ground. • Is voltage **B+**?	Yes	Repair or replace harness for short to power, then go to Step 7.
		No	Go to the next step.
5	**INSPECT HO2S HEATER (LF)** • Inspect HO2S heater (LF). (See 01–40C–33 HEATED OXYGEN SENSOR (HO2S) INSPECTION [AJ].) • Is there any malfunction?	Yes	Replace HO2S (LF), then go to Step 7. (See 01–15C–2 EXHAUST SYSTEM REMOVAL/INSTALLATION [AJ].)
		No	Go to the next step.
6	**INSPECT PCM CONNECTOR FOR POOR CONNECTION** • Turn the ignition switch off. • Disconnect PCM connector. • Check for poor connection (such as damaged, pulled-out pins, and corrosion). • Is there any malfunction?	Yes	Repair or replace the terminal, then go to the next step.
		No	Go to the next step.
7	**VERIFY TROUBLESHOOTING OF DTC P0052 COMPLETED** • Make sure to reconnect all disconnected connectors. • Clear DTC from PCM memory using WDS or equivalent. • Perform the KOEO or KOER SELF TEST using the WDS or equivalent. (See 01–02C–8 KOEO/KOER SELF TEST [AJ].) • Is the PENDING CODE same DTC present?	Yes	Replace PCM, then go to the next step. (See 01–40C–5 PCM REMOVAL/INSTALLATION [AJ].)
		No	Go to the next step.
8	**VERIFY AFTER REPAIR PROCEDURE** • Perform "AFTER REPAIR PROCEDURE". (See 01–02C–7 AFTER REPAIR PROCEDURE [AJ].) • Are any DTCs present?	Yes	Go to the applicable DTC inspection. (See 01–02C–13 DTC TABLE [AJ].)
		No	Troubleshooting completed.

DTC P0057 [AJ]

E6U010200000W26

DTC P0057	HO2S heater (LR) circuit low
DETECTION CONDITION	• The PCM monitors the HO2S heater (LR) control signal at PCM terminal 2AO. If the PCM turns the HO2S heater (LR) off but the HO2S heater (LR) circuit remains low voltage, the PCM determines that the HO2S heater (LR) circuit has a malfunction. **Diagnostic support note** • This is a continuous monitor (HO2S heater). • MIL illuminates if the PCM detects the above malfunction condition in two consecutive drive cycles or in one drive cycle while the DTC for the same malfunction has been stored in the PCM. • PENDING CODE is available if the PCM detects the above malfunction condition during the first drive cycle. • FREEZE FRAME DATA is available. • DTC is stored in PCM memory.
POSSIBLE CAUSE	• HO2S heater (LR) malfunction • Connector or terminal malfunction • Open circuit between ignition switch and HO2S (LR) terminal C • Short to ground circuit between HO2S (LR) terminal D and PCM terminal 2AO • Open circuit between HO2S (LR) terminal D and PCM terminal 2AO • PCM malfunction

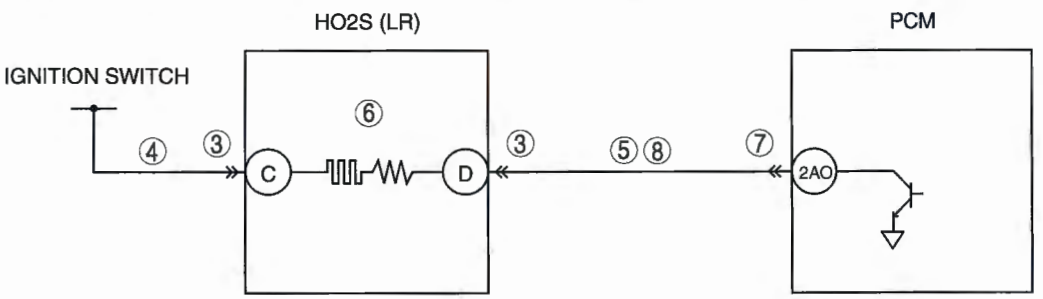

HO2S (LR)
HARNESS SIDE CONNECTOR

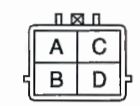

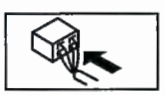

PCM
WIRING HARNESS-SIDE CONNECTOR

2BE	2BA	2AW	2AS	2AO	2AK	2AG	2AC	2Y	2U	2Q	2M	2I	2E	2A
2BF	2BB	2AX	2AT	2AP	2AL	2AH	2AD	2Z	2V	2R	2N	2J	2F	2B
2BG	2BC	2AY	2AU	2AQ	2AM	2AI	2AE	2AA	2W	2S	2O	2K	2G	2C
2BH	2BD	2AZ	2AV	2AR	2AN	2AJ	2AF	2AB	2X	2T	2P	2L	2H	2D

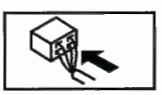

Diagnostic procedure

STEP	INSPECTION		ACTION
1	**VERIFY FREEZE FRAME DATA AND DIAGNOSTIC MONITORING TEST RESULTS HAVE BEEN RECORDED** • Have FREEZE FRAME DATA and DIAGNOSTIC MONITORING TEST RESULTS (HO2S heater related) been recorded?	Yes	Go to the next step.
		No	Record FREEZE FRAME DATA and DIAGNOSTIC MONITORING TEST RESULTS on repair order, then go to the next step.
2	**VERIFY RELATED REPAIR INFORMATION AVAILABILITY** • Check for related Service Bulletins and/or on-line repair information availability. • Is any related repair information available?	Yes	Perform repair or diagnosis according to the available repair information. • If the vehicle is not repaired, go to the next step.
		No	Go to the next step.
3	**INSPECT HO2S (LR) CONNECTOR FOR POOR CONNECTION** • Turn the ignition switch off. • Disconnect HO2S (LR) connector. • Check for poor connection (such as damaged, pulled-out pins, and corrosion). • Is there any malfunction?	Yes	Repair or replace the terminal, then go to Step 9.
		No	Go to the next step.
4	**INSPECT HO2S HEATER (LR) POWER CIRCUIT FOR OPEN CIRCUIT** • Turn the ignition switch to the ON position. • Measure voltage between HO2S (LR) terminal C and body ground. • Is voltage **B+**?	Yes	Go to the next step.
		No	Repair or replace harness for open circuit, then go to Step 9.
5	**INSPECT HO2S HEATER (LR) CONTROL CIRCUIT FOR SHORT TO GROUND** • Turn the ignition switch off. • Check continuity between HO2S (LR) terminal D and body ground. • Is there continuity?	Yes	Repair or replace harness for short to ground, then go to Step 9.
		No	Go to the next step.
6	**INSPECT HO2S HEATER (LR)** • Inspect HO2S heater (LR). (See 01–40C–33 HEATED OXYGEN SENSOR (HO2S) INSPECTION [AJ].) • Is there any malfunction?	Yes	Replace HO2S (LR), then go to Step 9. (See 01–15C–2 EXHAUST SYSTEM REMOVAL/ INSTALLATION [AJ].)
		No	Go to the next step.
7	**INSPECT PCM CONNECTOR FOR POOR CONNECTION** • Turn the ignition switch off. • Disconnect PCM connector. • Check for poor connection (such as damaged, pulled-out pins, and corrosion). • Is there any malfunction?	Yes	Repair or replace the terminal, then go to Step 9.
		No	Go to the next step.
8	**INSPECT HO2S HEATER (LR) CONTROL CIRCUIT FOR OPEN CIRCUIT** • Turn the ignition switch off. • Check continuity between HO2S (LR) terminal D and PCM terminal 2AO. • Is there continuity?	Yes	Go to the next step.
		No	Repair or replace harness for open circuit, then go to the next step.
9	**VERIFY TROUBLESHOOTING OF DTC P0057 COMPLETED** • Make sure to reconnect all disconnected connectors. • Clear DTC from PCM memory using WDS or equivalent. • Perform the KOEO or KOER SELF TEST using the WDS or equivalent. (See 01–02C–8 KOEO/KOER SELF TEST [AJ].) • Is the PENDING CODE same DTC present?	Yes	Replace PCM, then go to the next step. (See 01–40C–5 PCM REMOVAL/INSTALLATION [AJ].)
		No	Go to the next step.
10	**VERIFY AFTER REPAIR PROCEDURE** • Perform "AFTER REPAIR PROCEDURE". (See 01–02C–7 AFTER REPAIR PROCEDURE [AJ].) • Are any DTCs present?	Yes	Go to the applicable DTC inspection. (See 01–02C–13 DTC TABLE [AJ].)
		No	Troubleshooting completed.

DTC P0058 [AJ]

E6U010200000W27

DTC P0058	HO2S heater (LR) circuit high
DETECTION CONDITION	• The PCM monitors the HO2S heater (LR) control signal at PCM terminal 2AO. If the PCM turns the HO2S heater (LR) on but the rear heater circuit remains high voltage, the PCM determines that the HO2S heater (LR) circuit has a malfunction. **Diagnostic support note** • This is a continuous monitor (HO2S heater). • MIL illuminates if the PCM detects the above malfunction condition in two consecutive drive cycles or in one drive cycle while the DTC for the same malfunction has been stored in the PCM. • PENDING CODE is available if the PCM detects the above malfunction condition during the first drive cycle. • FREEZE FRAME DATA is available. • DTC is stored in PCM memory.
POSSIBLE CAUSE	• HO2S heater (LR) malfunction • Connector or terminal malfunction • Short to power circuit between HO2S (LR) terminal D and PCM terminal 2AO • PCM malfunction

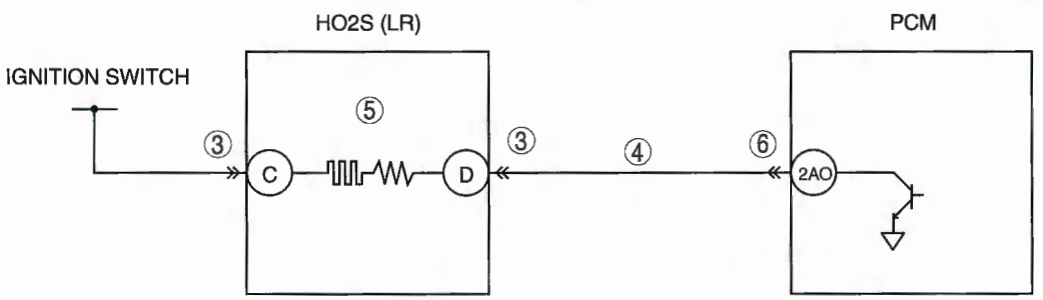

HO2S (LR)
HARNESS SIDE CONNECTOR

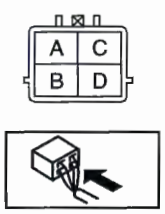

PCM
WIRING HARNESS-SIDE CONNECTOR

2BE	2BA	2AW	2AS	2AO	2AK	2AG	2AC	2Y	2U	2Q	2M	2I	2E	2A
2BF	2BB	2AX	2AT	2AP	2AL	2AH	2AD	2Z	2V	2R	2N	2J	2F	2B
2BG	2BC	2AY	2AU	2AQ	2AM	2AI	2AE	2AA	2W	2S	2O	2K	2G	2C
2BH	2BD	2AZ	2AV	2AR	2AN	2AJ	2AF	2AB	2X	2T	2P	2L	2H	2D

Diagnostic procedure

STEP	INSPECTION		ACTION
1	**VERIFY FREEZE FRAME DATA AND DIAGNOSTIC MONITORING TEST RESULTS HAVE BEEN RECORDED** • Have FREEZE FRAME DATA and DIAGNOSTIC MONITORING TEST RESULTS (HO2S heater related) been recorded?	Yes	Go to the next step.
		No	Record FREEZE FRAME DATA and DIAGNOSTIC MONITORING TEST RESULTS on repair order, then go to the next step.
2	**VERIFY RELATED REPAIR INFORMATION AVAILABILITY** • Check for related Service Bulletins and/or on-line repair information availability. • Is any related repair information available?	Yes	Perform repair or diagnosis according to the available repair information. • If the vehicle is not repaired, then go to the next step.
		No	Go to the next step.
3	**INSPECT HO2S (LR) CONNECTOR FOR POOR CONNECTION** • Turn the ignition switch off. • Disconnect HO2S (LR) connector. • Check for poor connection (such as damaged, pulled-out pins, and corrosion). • Is there any malfunction?	Yes	Repair or replace the terminal, then go to Step 7.
		No	Go to the next step.

STEP	INSPECTION		ACTION
4	**INSPECT HO2S HEATER (LR) CONTROL CIRCUIT FOR SHORT TO POWER** • Turn the ignition switch to the ON position. • Measure voltage between HO2S (LR) terminal D and body ground. • Is voltage **B+**?	Yes	Repair or replace harness for short to power, then go to Step 7.
		No	Go to the next step.
5	**INSPECT HO2S HEATER (LR)** • Inspect HO2S heater (LR). (See 01–40C–33 HEATED OXYGEN SENSOR (HO2S) INSPECTION [AJ].) • Is there any malfunction?	Yes	Replace HO2S (LR), then go to Step 7. (See 01–15C–2 EXHAUST SYSTEM REMOVAL/ INSTALLATION [AJ].)
		No	Go to the next step.
6	**INSPECT PCM CONNECTOR FOR POOR CONNECTION** • Turn the ignition switch off. • Disconnect PCM connector. • Check for poor connection (such as damaged, pulled-out pins, and corrosion). • Is there any malfunction?	Yes	Repair or replace the terminal, then go to the next step.
		No	Go to the next step.
7	**VERIFY TROUBLESHOOTING OF DTC P0058 COMPLETED** • Make sure to reconnect all disconnected connectors. • Clear DTC from PCM memory using WDS or equivalent. • Perform the KOEO or KOER SELF TEST using the WDS or equivalent. (See 01–02C–8 KOEO/KOER SELF TEST [AJ].) • Is the PENDING CODE same DTC present?	Yes	Replace or repair PCM, go to the next step. (See 01–40C–5 PCM REMOVAL/INSTALLATION [AJ].)
		No	Go to the next step.
8	**VERIFY AFTER REPAIR PROCEDURE** • Perform "AFTER REPAIR PROCEDURE". (See 01–02C–7 AFTER REPAIR PROCEDURE [AJ].) • Are any DTCs present?	Yes	Go to the applicable DTC inspection. (See 01–02C–13 DTC TABLE [AJ].)
		No	Troubleshooting completed.

DTC P0101 [AJ]

E6U010200000W28

DTC P0101	MAF sensor inconsistent with TP sensor
DETECTION CONDITION	• The PCM monitors mass intake air flow amount when the engine is running. — If the mass intake airflow amount is the **8.4—81 l/s or below** (the value depends on engine speed) for **5 s** and the throttle opening angle is **50% or above** with the engine speed is **above 1,000 rpm**, the PCM determines that the detected mass intake airflow amount is too low. — If the mass intake airflow amount is **73 l /s or above** for **5 s** and the engine speed is **2,500 rpm or below** with engine running, the PCM determines that the detected mass intake airflow amount is too high. **Diagnostic support note** • This is a continuous monitor (CCM). • MIL illuminates if the PCM detects the above malfunction condition in two consecutive drive cycles or in one drive cycle while the DTC for the same malfunction has been stored in the PCM. • PENDING CODE is available if the PCM detects the above malfunction condition during the first drive cycle. • FREEZE FRAME DATA is available. • DTC is stored in the PCM memory.
POSSIBLE CAUSE	• MAF sensor malfunction • TP sensor malfunction • Voltage drops in MAF signal circuit • Electrical corrosion in MAF signal circuit • Electrical corrosion in MAF RETURN circuit • Voltage drops in ground circuit • PCM malfunction

Diagnostic procedure

STEP	INSPECTION		ACTION
1	**VERIFY FREEZE FRAME DATA HAS BEEN RECORDED** • Has FREEZE FRAME DATA been recorded?	Yes	Go to the next step.
		No	Record FREEZE FRAME DATA on repair order, then go to the next step.
2	**VERIFY RELATED REPAIR INFORMATION AVAILABILITY** • Check for related Service Bulletins and/or on-line repair information availability. • Is any related repair information available?	Yes	Perform repair or diagnosis according to the available repair information. • If the vehicle is not repaired, go to the next step.
		No	Go to the next step.
3	**VERIFY CURRENT INPUT SIGNAL STATUS-IS CONCERN INTERMITTENT OR CONSTANT** • Connect WDS or equivalent to DLC-2. • Start engine. • Access ECT, TP1 and MAF PIDs. • Warm up engine until ECT PID is **70 °C {158 °F} or above**. • Drive vehicle. • Read MAF PID when TP1 PID is **50% or above**. • Is MAF PID reading the **threshold or below**?	Yes	Make sure that TP1 PID changes smoothly when gradually opening throttle valve. • If not, replace throttle body and go to Step 7. (See 01–13C–2 INTAKE AIR SYSTEM REMOVAL/ INSTALLATION [AJ].) • For other, go to the next step.
		No	Go to the next step.
4	**VERIFY CURRENT INPUT SIGNAL STATUS-IS CONCERN INTERMITTENT OR CONSTANT** • Connect WDS or equivalent to DLC-2. • Start engine. • Access ECT, MAF and RPM PIDs. • Warm up engine until ECT PID is **70 °C {158°F} or above**. • Read MAF PID when RPM PID is **2,500 rpm or below**. • Is MAF PID reading **73 l/s or above**?	Yes	Go to the next step.
		No	Intermittent concern exists. Go to "INTERMITTENT CONCERNS TROUBLESHOOTING". (See 01–03C–5 INTERMITTENT CONCERN TROUBLESHOOTING [AJ].)
5	**INSPECT MAF/IAT SENSOR CONNECTOR FOR POOR CONNECTION** • Turn the ignition switch off. • Disconnect MAF/IAT sensor connector. • Check for poor connection (such as damaged, pulled-out pins, and corrosion). • Is there any malfunction?	Yes	Repair or replace the terminal, then go to Step 7.
		No	Go to the next step.
6	**INSPECT PCM CONNECTOR FOR POOR CONNECTION** • Turn the ignition switch off. • Disconnect PCM connector. • Check for poor connection (such as damaged, pulled-out pins, and corrosion). • Is there any malfunction?	Yes	Repair or replace the terminal, then go to the next step.
		No	Replace MAF/IAT sensor, then go to the next step. (See 01–13C–2 INTAKE AIR SYSTEM REMOVAL/ INSTALLATION [AJ].)
7	**VERIFY TROUBLESHOOTING OF DTC P0101 COMPLETED** • Make sure to reconnect all disconnected connectors. • Turn the ignition switch to the ON position. • Clear the DTC from the memory using the WDS or equivalent. • Start engine. • Warm up engine until ECT PID is **70 °C {158 °F} or above**. • Read MAF and RPM PIDs. **Note** • MAF PID should indicate **73 l/s or below** when RPM PID is **2,500 rpm or below**. • Is PENDING CODE for this DTC present?	Yes	Replace PCM, then go to the next step. (See 01–40C–5 PCM REMOVAL/INSTALLATION [AJ].)
		No	Go to the next step.
8	**VERIFY AFTER REPAIR PROCEDURE** • Perform "AFTER REPAIR PROCEDURE". (See 01–02C–7 AFTER REPAIR PROCEDURE [AJ].) • Are any DTCs present?	Yes	Go to the applicable DTC inspection. (See 01–02C–13 DTC TABLE [AJ].)
		No	Troubleshooting completed.

DTC P0102 [AJ]

E6U010200000W29

DTC P0102	MAF circuit low input
DETECTION CONDITION	• The PCM monitors the input voltage from the MAF sensor when the engine is running. If the input voltage at PCM terminal 1AK is **0.21 V or below**, the PCM determines that the MAF circuit has a malfunction. **Diagnostic support note** • This is a continuous monitor (CCM). • MIL illuminates if the PCM detects the above malfunction condition during the first drive cycle. • FREEZE FRAME DATA is available. • DTC is stored in the PCM memory.
POSSIBLE CAUSE	• MAF sensor malfunction • Connector or terminal malfunction • Open circuit between main relay terminal C and MAF/IAT sensor terminal A • Open circuit between MAF/IAT sensor terminal C and PCM terminal 1AK • Short to ground circuit between MAF/IAT sensor terminal C and PCM terminal 1AK • PCM malfunction

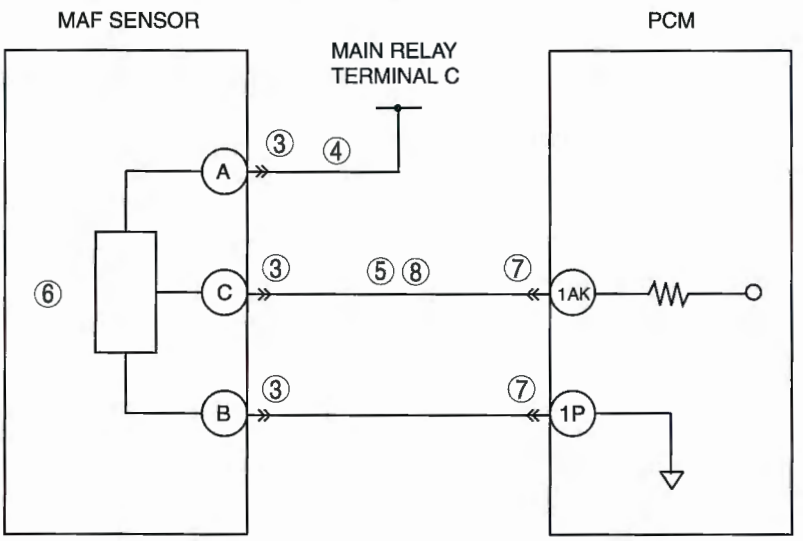

MAF/IAT SENSOR
HARNESS SIDE CONNECTOR

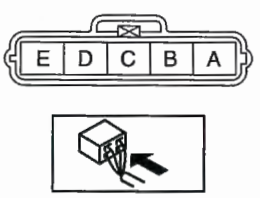

PCM
WIRING HARNESS-SIDE CONNECTOR

1BE	1BA	1AW	1AS	1AO	1AK	1AG	1AC	1Y	1U	1Q	1M	1I	1E	1A
1BF	1BB	1AX	1AT	1AP	1AL	1AH	1AD	1Z	1V	1R	1N	1J	1F	1B
1BG	1BC	1AY	1AU	1AQ	1AM	1AI	1AE	1AA	1W	1S	1O	1K	1G	1C
1BH	1BD	1AZ	1AV	1AR	1AN	1AJ	1AF	1AB	1X	1T	1P	1L	1H	1D

Diagnostic procedure

STEP	INSPECTION		ACTION
1	**VERIFY FREEZE FRAME DATA HAS BEEN RECORDED** • Has FREEZE FRAME DATA been recorded?	Yes	Go to the next step.
		No	Record FREEZE FRAME DATA on repair order, then go to the next step.
2	**VERIFY RELATED REPAIR INFORMATION AVAILABILITY** • Check for related Service Bulletins and/or on-line repair information availability. • Is any related repair information available?	Yes	Perform repair or diagnosis according to the available repair information. • If the vehicle is not repaired, go to the next step.
		No	Go to the next step.
3	**INSPECT MAF/IAT SENSOR CONNECTOR FOR POOR CONNECTION** • Turn the ignition switch off. • Disconnect the MAF/IAT sensor connector. • Check for poor connection (such as damaged, pulled-out pins, and corrosion). • Is there any malfunction?	Yes	Repair or replace the terminal, then go to Step 9.
		No	Go to the next step.
4	**INSPECT MAF SENSOR POWER CIRCUIT FOR OPEN CIRCUIT** • Turn the ignition switch to the ON position. • Measure voltage between MAF/IAT sensor terminal A and body ground. • Is voltage **B+**?	Yes	Go to the next step.
		No	Repair or replace harness for open circuit, then go to Step 9.
5	**INSPECT MAF SENSOR SIGNAL CIRCUIT FOR SHORT TO GROUND** • Turn the ignition switch off. • Disconnect MAF/IAT sensor connector. • Check continuity between MAF/IAT sensor terminal C and body ground. • Is there continuity?	Yes	Repair or replace harness for short to ground, then go to Step 9.
		No	Go to the next step.
6	**INSPECT MAF SENSOR** • Inspect MAF sensor. (See 01–40C–32 MASS AIR FLOW (MAF) SENSOR INSPECTION [AJ].) • Is there any malfunction?	Yes	Replace MAF/IAT sensor, then go to Step 9. (See 01–13C–2 INTAKE AIR SYSTEM REMOVAL/INSTALLATION [AJ].)
		No	Go to the next step.
7	**INSPECT PCM CONNECTOR FOR POOR CONNECTION** • Turn the ignition switch off. • Disconnect PCM connector. • Check for poor connection (such as damaged, pulled-out pins, and corrosion). • Is there any malfunction?	Yes	Repair or replace the terminal, then go to Step 9.
		No	Go to the next step.
8	**INSPECT MAF SENSOR SIGNAL CIRCUIT FOR OPEN CIRCUIT** • Turn the ignition switch off. • Check for continuity between MAF/IAT sensor terminal C and PCM terminal 1AK. • Is there continuity?	Yes	Go to the next step.
		No	Repair or replace harness for open circuit, then go to the next step.
9	**VERIFY TROUBLESHOOTING OF DTC P0102 COMPLETED** • Make sure to reconnect all disconnected connectors. • Clear DTC from PCM memory using WDS or equivalent. • Perform the KOEO or KOER SELF TEST using the WDS or equivalent. (See 01–02C–8 KOEO/KOER SELF TEST [AJ].) • Is the PENDING CODE same DTC present?	Yes	Replace PCM, then go to the next step. (See 01–40C–5 PCM REMOVAL/INSTALLATION [AJ].)
		No	Go to the next step.
10	**VERIFY AFTER REPAIR PROCEDURE** • Perform "AFTER REPAIR PROCEDURE". (See 01–02C–7 AFTER REPAIR PROCEDURE [AJ].) • Are any DTCs present?	Yes	Go to the applicable DTC inspection. (See 01–02C–13 DTC TABLE [AJ].)
		No	Troubleshooting completed.

DTC P0103 [AJ]

E6U010200000W30

DTC P0103	MAF circuit high input
DETECTION CONDITION	• The PCM monitors the input voltage from the MAF sensor when the engine is running. If the input voltage at PCM terminal 1AK is **4.9 V or above**, the PCM determines that the MAF circuit has a malfunction. **Diagnostic support note** • This is a continuous monitor (CCM). • MIL illuminates if the PCM detects the above malfunction condition during the first drive cycle. • FREEZE FRAME DATA is available. • DTC is stored in the PCM memory.
POSSIBLE CAUSE	• MAF sensor malfunction • Connector or terminal malfunction • Short to power circuit between MAF/IAT sensor terminal C and PCM terminal 1AK • Open circuit between MAF/IAT sensor terminal B and PCM terminal 1P • PCM malfunction

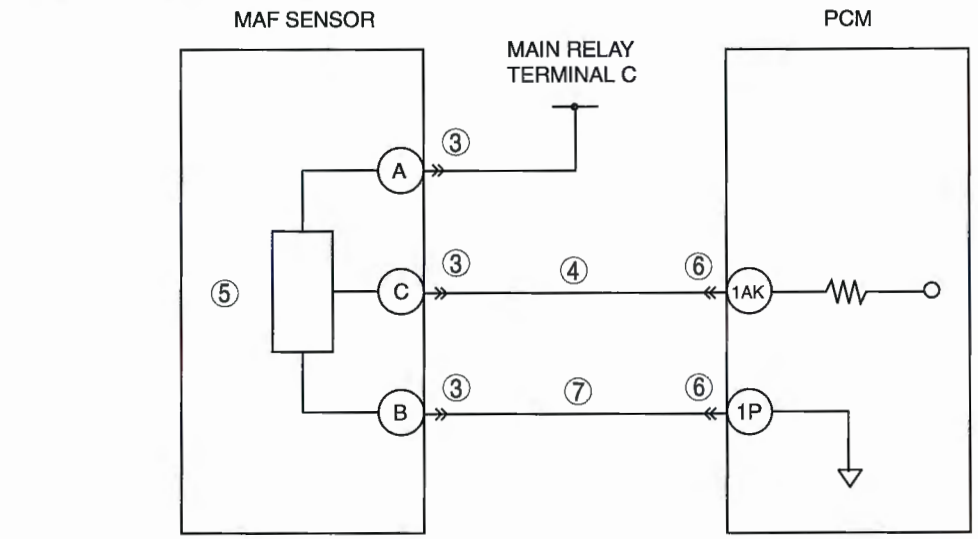

MAF/IAT SENSOR
HARNESS SIDE CONNECTOR

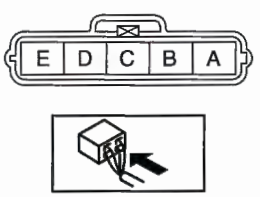

PCM
WIRING HARNESS-SIDE CONNECTOR

1BE	1BA	1AW	1AS	1AO	1AK	1AG	1AC	1Y	1U	1Q	1M	1I	1E	1A
1BF	1BB	1AX	1AT	1AP	1AL	1AH	1AD	1Z	1V	1R	1N	1J	1F	1B
1BG	1BC	1AY	1AU	1AQ	1AM	1AI	1AE	1AA	1W	1S	1O	1K	1G	1C
1BH	1BD	1AZ	1AV	1AR	1AN	1AJ	1AF	1AB	1X	1T	1P	1L	1H	1D

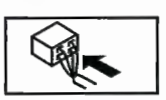

Diagnostic procedure

STEP	INSPECTION		ACTION
1	**VERIFY FREEZE FRAME DATA HAS BEEN RECORDED** • Has FREEZE FRAME DATA been recorded?	Yes	Go to the next step.
		No	Record FREEZE FRAME DATA on repair order, then go to the next step.
2	**VERIFY RELATED REPAIR INFORMATION AVAILABILITY** • Check for related Service Bulletins and/or on-line repair information availability. • Is any related repair information available?	Yes	Perform repair or diagnosis according to the available repair information. • If the vehicle is not repaired, go to the next step.
		No	Go to the next step.
3	**INSPECT MAF/IAT SENSOR CONNECTOR FOR POOR CONNECTION** • Turn the ignition switch off. • Disconnect the MAF/IAT sensor connector. • Check for poor connection (such as damaged, pulled-out pins, and corrosion). • Is there any malfunction?	Yes	Repair or replace the terminal, then go to Step 8.
		No	Go to the next step.
4	**INSPECT MAF SENSOR SIGNAL CIRCUIT FOR SHORT TO POWER** • Turn the ignition switch to the ON position. • Measure voltage between MAF/IAT sensor terminal C and body ground. • Is voltage **B+**?	Yes	Repair or replace harness for short to power, then go to Step 8.
		No	Go to the next step.
5	**INSPECT MAF SENSOR** • Inspect MAF sensor. (See 01–40C–32 MASS AIR FLOW (MAF) SENSOR INSPECTION [AJ].) • Is there any malfunction?	Yes	Replace MAF/IAT sensor, then go to Step 8. (See 01–13C–2 INTAKE AIR SYSTEM REMOVAL/ INSTALLATION [AJ].)
		No	Go to the next step.
6	**INSPECT PCM CONNECTOR FOR POOR CONNECTION** • Turn the ignition switch off. • Disconnect PCM connector. • Check for poor connection (such as damaged, pulled-out pins, and corrosion). • Is there any malfunction?	Yes	Repair or replace the terminal, then go to Step 8.
		No	Go to the next step.
7	**INSPECT MAF SENSOR GROUND CIRCUIT FOR OPEN CIRCUIT** • Turn the ignition switch off. • Check for continuity between MAF/IAT sensor terminal B and PCM terminal 1P. • Is there continuity?	Yes	Go to the next step.
		No	Repair or replace harness for open circuit, then go to the next step.
8	**VERIFY TROUBLESHOOTING OF DTC P0103 COMPLETED** • Make sure to reconnect all disconnected connectors. • Clear DTC from PCM memory using WDS or equivalent. • Perform the KOEO or KOER SELF TEST using the WDS or equivalent. (See 01–02C–8 KOEO/KOER SELF TEST [AJ].) • Is the PENDING CODE same DTC present?	Yes	Replace PCM, then go to the next step. (See 01–40C–5 PCM REMOVAL/INSTALLATION [AJ].)
		No	Go to the next step.
9	**VERIFY AFTER REPAIR PROCEDURE** • Perform "AFTER REPAIR PROCEDURE". (See 01–02C–7 AFTER REPAIR PROCEDURE [AJ].) • Are any DTCs present?	Yes	Go to the applicable DTC inspection. (See 01–02C–13 DTC TABLE [AJ].)
		No	Troubleshooting completed.

DTC P0111 [AJ]

E6U010200000W31

DTC P0111	IAT circuit performance problem
DETECTION CONDITION	• If the intake air temperature is higher than the engine coolant temperature by **18 °C {32.4 °F}** for **1.2 s** with the ignition switch turn in the ON position*, the PCM determines that there is an IAT sensor circuit range/performance problem. *: Ignition switch is in the ON position when **6 h or more** have passed since the ignition switch was turned off **Diagnostic support note** • This is a continuous monitor (CCM). • MIL illuminates if the PCM detects the above malfunction condition in two consecutive drive cycles or in one drive cycle while the DTC for the same malfunction has been stored in the PCM. • PENDING CODE is available if the PCM detects the above malfunction condition during the first drive cycle. • FREEZE FRAME DATA is available. • DTC is stored in PCM memory.
POSSIBLE CAUSE	• IAT sensor malfunction • Connector or terminal malfunction • PCM malfunction

Diagnostic procedure

STEP	INSPECTION		ACTION
1	**VERIFY FREEZE FRAME DATA HAS BEEN RECORDED** • Has FREEZE FRAME DATA been recorded?	Yes	Go to the next step.
		No	Record FREEZE FRAME DATA on repair order, then go to the next step.
2	**VERIFY RELATED REPAIR INFORMATION AVAILABILITY** • Check for related Service Bulletins and/or on-line repair information availability. • Is any related repair information available?	Yes	Perform repair or diagnosis according to the available repair information. • If the vehicle is not repaired, go to the next step.
		No	Go to the next step.
3	**INSPECT MAF/IAT SENSOR CONNECTOR FOR POOR CONNECTION** • Turn the ignition switch off. • Disconnect MAF/IAT sensor connector. • Check for poor connection (such as damaged, pulled-out pins, and corrosion). • Is there any malfunction?	Yes	Repair or replace the terminal, then go to Step 6.
		No	Go to the next step.
4	**INSPECT IAT SENSOR** • Inspect IAT sensor. (See 01–40C–31 INTAKE AIR TEMPERATURE (IAT) SENSOR INSPECTION [AJ].) • Is there any malfunction?	Yes	Replace MAF/IAT sensor, then go to Step 6. (See 01–13C–2 INTAKE AIR SYSTEM REMOVAL/INSTALLATION [AJ].)
		No	Go to the next step.
5	**INSPECT PCM CONNECTOR FOR POOR CONNECTION** • Turn the ignition switch off. • Disconnect PCM connector. • Check for poor connection (such as damaged, pulled-out pins, and corrosion). • Is there any malfunction?	Yes	Repair or replace the terminal, then go to the next step.
		No	Go to the next step.
6	**VERIFY TROUBLESHOOTING OF DTC P0111 COMPLETED** • Make sure to reconnect all disconnected connectors. • Clear the DTC from the PCM memory using the WDS or equivalent. • Start engine and run engine under FREEZE FRAME DATA condition. • Is PENDING CODE for this DTC present?	Yes	Replace PCM, then go to the next step. (See 01–40C–5 PCM REMOVAL/INSTALLATION [AJ].)
		No	Go to the next step.
7	**VERIFY AFTER REPAIR PROCEDURE** • Perform "AFTER REPAIR PROCEDURE". (See 01–02C–7 AFTER REPAIR PROCEDURE [AJ].) • Are any DTCs present?	Yes	Go to the applicable DTC inspection. (See 01–02C–13 DTC TABLE [AJ].)
		No	Troubleshooting completed.

DTC P0112 [AJ]

E6U010200000W32

DTC P0112	IAT circuit low input
DETECTION CONDITION	• The PCM monitors the IAT sensor signal at PCM terminal 1AT. If the PCM detects IAT sensor voltage of **0.16 V or below**, the PCM determines that the IAT sensor circuit has a malfunction. **Diagnostic support note** • This is a continuous monitor (CCM). • MIL illuminates if the PCM detects the above malfunction condition during the first drive cycle. • FREEZE FRAME DATA is available. • DTC is stored in the PCM memory.
POSSIBLE CAUSE	• IAT sensor malfunction • Connector or terminal malfunction • Short to ground circuit between MAF/IAT sensor terminal D and PCM terminal 1AT • Short each harness IAT sensor terminal D and E • PCM malfunction

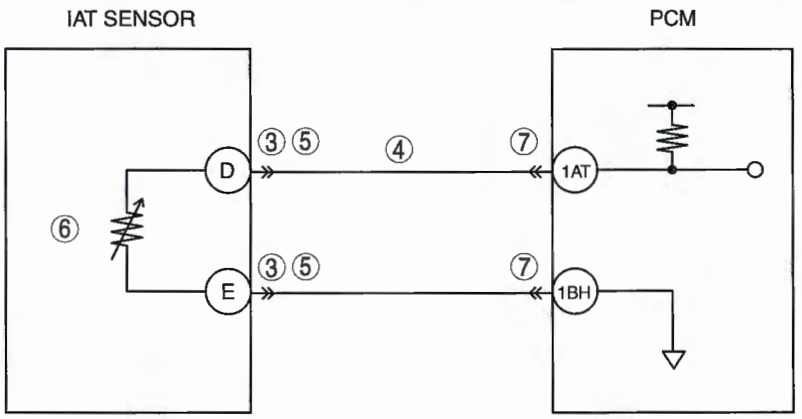

MAF/IAT SENSOR
HARNESS SIDE CONNECTOR

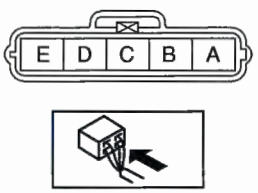

PCM
WIRING HARNESS-SIDE CONNECTOR

1BE	1BA	1AW	1AS	1AO	1AK	1AG	1AC	1Y	1U	1Q	1M	1I	1E	1A
1BF	1BB	1AX	1AT	1AP	1AL	1AH	1AD	1Z	1V	1R	1N	1J	1F	1B
1BG	1BC	1AY	1AU	1AQ	1AM	1AI	1AE	1AA	1W	1S	1O	1K	1G	1C
1BH	1BD	1AZ	1AV	1AR	1AN	1AJ	1AF	1AB	1X	1T	1P	1L	1H	1D

Diagnostic procedure

STEP	INSPECTION		ACTION
1	**VERIFY FREEZE FRAME DATA HAS BEEN RECORDED** • Has FREEZE FRAME DATA been recorded?	Yes	Go to the next step.
		No	Record FREEZE FRAME DATA on repair order, then go to the next step.
2	**VERIFY RELATED REPAIR INFORMATION AVAILABILITY** • Check for related Service Bulletins and/or on-line repair information availability. • Is any related repair information available?	Yes	Perform repair or diagnosis according to the available repair information. • If the vehicle is not repaired, go to the next step.
		No	Go to the next step.
3	**INSPECT MAF/IAT SENSOR CONNECTOR FOR POOR CONNECTION** • Turn the ignition switch off. • Disconnect MAF/IAT sensor connector. • Check for poor connection (such as damaged, pulled-out pins, and corrosion). • Is there any malfunction?	Yes	Repair or replace the terminal, then go to Step 8.
		No	Go to the next step.
4	**INSPECT IAT SENSOR SIGNAL CIRCUIT FOR SHORT TO GROUND** • Turn the ignition switch off. • Disconnect MAF/IAT sensor connector. • Check continuity between MAF/IAT sensor terminal D and body ground. • Is there continuity?	Yes	Repair or replace harness for short to ground, then go to Step 8.
		No	Go to the next step.
5	**INSPECT IAT SENSOR CIRCUIT FOR SHORT WITH EACH OTHER** • Turn the ignition switch off. • Check continuity between MAF/IAT sensor terminal D and E. • Is there continuity?	Yes	Repair or replace harness for short with each other, then go to Step 8.
		No	Go to the next step.
6	**INSPECT IAT SENSOR** • Inspect IAT sensor. (See 01–40C–31 INTAKE AIR TEMPERATURE (IAT) SENSOR INSPECTION [AJ].) • Is there any malfunction?	Yes	Replace MAF/IAT sensor, then go to Step 8. (See 01–13C–2 INTAKE AIR SYSTEM REMOVAL/INSTALLATION [AJ].)
		No	Go to the next step.
7	**INSPECT PCM CONNECTOR FOR POOR CONNECTION** • Turn the ignition switch off. • Disconnect PCM connector. • Check for poor connection (such as damaged, pulled-out pins, and corrosion). • Is there any malfunction?	Yes	Repair or replace the terminal, then go to the next step.
		No	Go to the next step.
8	**VERIFY TROUBLESHOOTING OF DTC P0112 COMPLETED** • Make sure to reconnect all disconnected connectors. • Clear DTC from PCM memory using WDS or equivalent. • Perform the KOEO or KOER SELF TEST using the WDS or equivalent. (See 01–02C–8 KOEO/KOER SELF TEST [AJ].) • Is the PENDING CODE same DTC present?	Yes	Replace PCM, then go to the next step. (See 01–40C–5 PCM REMOVAL/INSTALLATION [AJ].)
		No	Go to the next step.
9	**VERIFY AFTER REPAIR PROCEDURE** • Perform "AFTER REPAIR PROCEDURE". (See 01–02C–7 AFTER REPAIR PROCEDURE [AJ].) • Are any DTCs present?	Yes	Go to the applicable DTC inspection. (See 01–02C–13 DTC TABLE [AJ].)
		No	Troubleshooting completed.

DTC P0113 [AJ]

E6U010200000W33

DTC P0113	IAT circuit high input
DETECTION CONDITION	• The PCM monitors the IAT sensor signal at PCM terminal 1AT. If the PCM detects IAT sensor voltage **of 4.84 V or above**, the PCM determines that the IAT sensor circuit has a malfunction. **Diagnostic support note** • This is a continuous monitor (CCM). • MIL illuminates if the PCM detects the above malfunction condition during the first drive cycle. • FREEZE FRAME DATA is available. • DTC is stored in the PCM memory.
POSSIBLE CAUSE	• IAT sensor malfunction • Connector or terminal malfunction • Short to power circuit between MAF/IAT sensor terminal D and PCM terminal 1AT • Open circuit between MAF/IAT sensor terminal D and PCM terminal 1AT • Open circuit between MAF/IAT sensor terminal E and PCM terminal 1BH • PCM malfunction

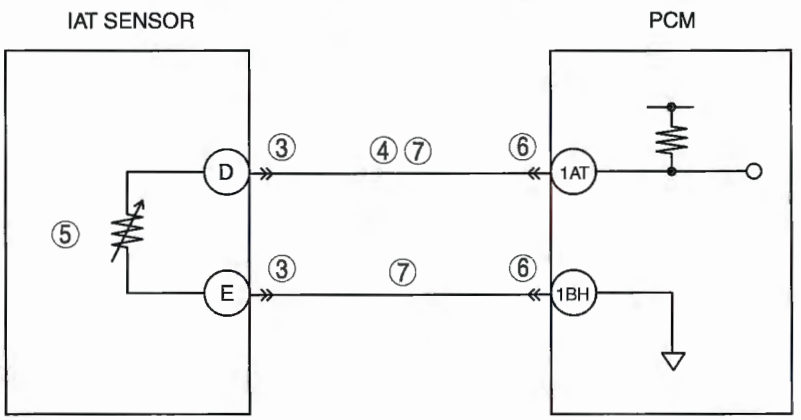

MAF/IAT SENSOR
HARNESS SIDE CONNECTOR

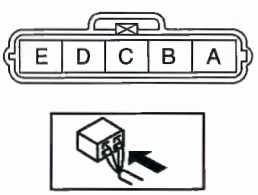

PCM
WIRING HARNESS-SIDE CONNECTOR

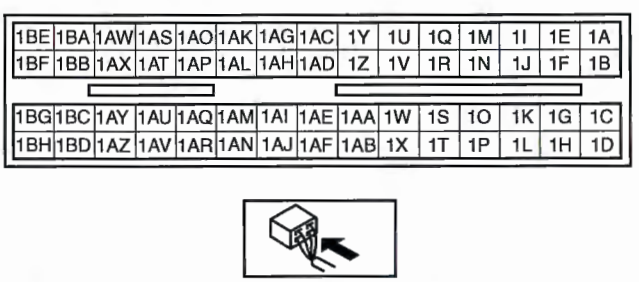

Diagnostic procedure

STEP	INSPECTION		ACTION
1	**VERIFY FREEZE FRAME DATA HAS BEEN RECORDED** • Has FREEZE FRAME DATA been recorded?	Yes	Go to the next step.
		No	Record FREEZE FRAME DATA on repair order, then go to the next step.
2	**VERIFY RELATED REPAIR INFORMATION AVAILABILITY** • Check for related Service Bulletins and/or on-line repair information availability. • Is any related repair information available?	Yes	Perform repair or diagnosis according to the available repair information. • If the vehicle is not repaired, go to the next step.
		No	Go to the next step.
3	**INSPECT MAF/IAT SENSOR CONNECTOR FOR POOR CONNECTION** • Turn the ignition switch off. • Disconnect MAF/IAT sensor connector. • Check for poor connection (such as damaged, pulled-out pins, and corrosion). • Is there any malfunction?	Yes	Repair or replace the terminal, then go to Step 8.
		No	Go to the next step.

STEP	INSPECTION		ACTION
4	**INSPECT IAT SENSOR SIGNAL CIRCUIT FOR SHORT TO POWER** • Turn the ignition switch to the ON position. • Measure voltage between MAF/IAT sensor terminal D and body ground. • Is voltage **B+**?	Yes	Repair or replace harness for short to power, then go to Step 8.
		No	Go to the next step.
5	**INSPECT IAT SENSOR** • Inspect IAT sensor. (See 01–40C–31 INTAKE AIR TEMPERATURE (IAT) SENSOR INSPECTION [AJ].) • Is there any malfunction?	Yes	Replace MAF/IAT sensor, then go to Step 8. (See 01–13C–2 INTAKE AIR SYSTEM REMOVAL/ INSTALLATION [AJ].)
		No	Go to the next step.
6	**INSPECT PCM CONNECTOR FOR POOR CONNECTION** • Turn the ignition switch off. • Disconnect PCM connector. • Check for poor connection (such as damaged, pulled-out pins, and corrosion). • Is there any malfunction?	Yes	Repair or replace the terminal, then go to Step 8.
		No	Go to the next step.
7	**INSPECT IAT SENSOR CIRCUIT FOR OPEN CIRCUIT** • Turn the ignition switch off. • Check continuity between the following circuits: — MAF/IAT sensor terminal D and PCM terminal 1AT — MAF/IAT sensor terminal E and PCM terminal 1BH • Is there continuity?	Yes	Repair or replace harness for open circuit, then go to the next step.
		No	Go to the next step.
8	**VERIFY TROUBLESHOOTING OF DTC P0113 COMPLETED** • Make sure to reconnect all disconnected connectors. • Clear DTC from PCM memory using WDS or equivalent. • Perform the KOEO or KOER SELF TEST using the WDS or equivalent. (See 01–02C–8 KOEO/KOER SELF TEST [AJ].) • Is the PENDING CODE same DTC present?	Yes	Replace PCM, then go to the next step. (See 01–40C–5 PCM REMOVAL/INSTALLATION [AJ].)
		No	Go to the next step.
9	**VERIFY AFTER REPAIR PROCEDURE** • Perform "AFTER REPAIR PROCEDURE". (See 01–02C–7 AFTER REPAIR PROCEDURE [AJ].) • Are any DTCs present?	Yes	Go to the applicable DTC inspection. (See 01–02C–13 DTC TABLE [AJ].)
		No	Troubleshooting completed.

DTC P0116 [AJ]

E6U010200000WC2

DTC P0116	Engine coolant temperature circuit range/performance
DETECTION CONDITION	• The PCM monitors the maximum value and minimum value of engine coolant temperature when the engine is started and **5 min** have been passed after leaving the vehicle **6 h or more**. If the difference between the maximum and the minimum values of the engine coolant temperature is **below 6°C {10.8°F}**, the PCM determines that there is an ECT circuit range/performance problem. **Diagnostic support note** • This is a continuous monitor (Engine cooling system). • MIL illuminates if the PCM detects the above malfunctioning condition in first drive cycle. • FREEZE FRAME DATA is available. • DTC is stored in the PCM memory.
POSSIBLE CAUSE	• ECT sensor malfunction • Connector or terminal malfunction • PCM malfunction

Diagnostic procedure

STEP	INSPECTION		ACTION
1	**VERIFY FREEZE FRAME DATA AND DIAGNOSTIC MONITORING TEST RESULTS HAVE BEEN RECORDED** • Have FREEZE FRAME DATA and DIAGNOSTIC MONITORING TEST RESULTS (Engine cooling system related) been recorded?	Yes	Go to the next step.
		No	Record FREEZE FRAME DATA and DIAGNOSTIC MONITORING TEST RESULTS on repair order, then go to the next step.
2	**VERIFY RELATED REPAIR INFORMATION AVAILABILITY** • Verify related Service Bulletins and/or on-line repair information availability. • Is any related repair information available?	Yes	Perform repair or diagnosis according to the available repair information. If the vehicle is not repaired, go to next step.
		No	Go to the next step.
3	**IDENTIFY TRIGGER DTC FOR FREEZE FRAME DATA** • Is DTC P0116 on FREEZE FRAME DATA?	Yes	Go to the next step.
		No	Go to troubleshooting for DTC on FREEZE FRAME DATA. (See 01–02C–13 DTC TABLE [AJ].))
4	**INSPECT ECT SENSOR CONNECTOR FOR POOR CONNECTION** • Turn the ignition switch off. • Disconnect ECT sensor connector. • Inspect for poor connection (such as damaged/ pulled-out pins, corrosion). • Is there any malfunction?	Yes	Repair or replace the terminal, then go to Step 8.
		No	Go to the next step.
5	**INSPECT ECT SENSOR** • Inspect the ECT sensor. (See 01–40C–29 ENGINE COOLANT TEMPERATURE (ECT) SENSOR INSPECTION [AJ].) • Is there any malfunction?	Yes	Replace the ECT sensor, then go to Step 8.
		No	Go to the next step.
6	**INSPECT PCM CONNECTOR FOR POOR CONNECTION** • Turn the ignition switch off. • Disconnect the PCM connector. • Inspect for poor connection (such as damaged/ pulled-out pins, corrosion). • Is there any malfunction?	Yes	Repair or replace the terminal, then go to Step 8.
		No	Go to the next step.
7	**COMPARE ECT PID VALUE** • Prepare a new ECT sensor. • Clear the DTC from the PCM memory using the WDS or equivalent. • Connect the ECT sensor connector to the new ECT sensor without installing to the engine. • Turn the ignition switch to the ON position and record the ECT PID value. • Replace the malfunction ECT sensor with new one. • Start the engine and wait for **5 min**. • Record the ECT PID value. • Is the difference between ECT PID values **more than 6 °C {42 °F}**?	Yes	Go to the next step.
		No	Inspect the thermostat. • If the thermostat is normal, go to the next step. • If the thermostat is not normal, then go to the next step.
8	**VERIFY TROUBLESHOOTING OF DTC P0116 COMPLETED** • Make sure to reconnect all disconnected connectors. • Clear the DTC from the PCM memory using the WDS or equivalent. • Run Drive Mode 1 and 3. (See 01–02C–8 OBD-II DRIVE MODE [AJ].) • Is the PENDING CODE same DTC present?	Yes	Replace PCM, then go to next step. (See 01–40C–5 PCM REMOVAL/INSTALLATION [AJ].)
		No	Go to the next step.
9	**VERIFY AFTER REPAIR PROCEDURE** • Perform "After Repair Procedure". (See 01–02C–7 AFTER REPAIR PROCEDURE [AJ].) • Is there any DTC present?	Yes	Go to applicable DTC inspection. (See 01–02C–13 DTC TABLE [AJ].)
		No	Troubleshooting completed.

DTC P0117 [AJ]

E6U010200000W34

DTC P0117	ECT circuit low input
DETECTION CONDITION	• The PCM monitors the ECT sensor signal at PCM terminal 2AQ. If the PCM detects ECT sensor voltage of **0.18 V or below**, the PCM determines that the ECT sensor circuit has a malfunction. **Diagnostic support note** • This is a continuous monitor (Engine cooling system). • MIL illuminates if the PCM detects the above malfunction condition during the first drive cycle. • FREEZE FRAME DATA is available. • DTC is stored in the PCM memory.
POSSIBLE CAUSE	• ECT sensor malfunction • Connector or terminal malfunction • Short to ground circuit between ECT sensor terminal A and PCM terminal 2AQ • Short each harness ECT sensor terminal A and B • PCM malfunction

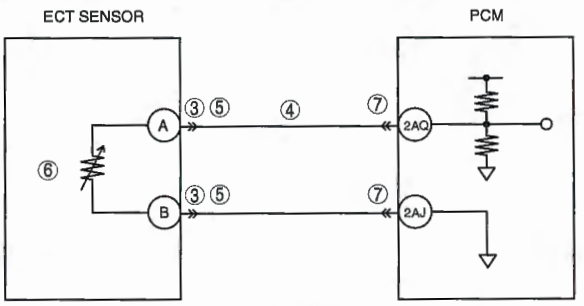

ECT SENSOR
HARNESS SIDE CONNECTOR



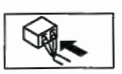

PCM
WIRING HARNESS-SIDE CONNECTOR

2BE	2BA	2AW	2AS	2AO	2AK	2AG	2AC	2Y	2U	2Q	2M	2I	2E	2A
2BF	2BB	2AX	2AT	2AP	2AL	2AH	2AD	2Z	2V	2R	2N	2J	2F	2B
2BG	2BC	2AY	2AU	2AQ	2AM	2AI	2AE	2AA	2W	2S	2O	2K	2G	2C
2BH	2BD	2AZ	2AV	2AR	2AN	2AJ	2AF	2AB	2X	2T	2P	2L	2H	2D

1BE	1BA	1AW	1AS	1AO	1AK	1AG	1AC	1Y	1U	1Q	1M	1I	1E	1A
1BF	1BB	1AX	1AT	1AP	1AL	1AH	1AD	1Z	1V	1R	1N	1J	1F	1B
1BG	1BC	1AY	1AU	1AQ	1AM	1AI	1AE	1AA	1W	1S	1O	1K	1G	1C
1BH	1BD	1AZ	1AV	1AR	1AN	1AJ	1AF	1AB	1X	1T	1P	1L	1H	1D

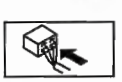

Diagnostic procedure

STEP	INSPECTION		ACTION
1	**VERIFY FREEZE FRAME DATA AND DIAGNOSTIC MONITORING TEST RESULTS HAVE BEEN RECORDED** • Have FREEZE FRAME DATA and DIAGNOSTIC MONITORING TEST RESULTS (Engine cooling system related) been recorded?	Yes	Go to the next step.
		No	Record FREEZE FRAME DATA and DIAGNOSTIC MONITORING TEST RESULTS on repair order, then go to the next step.
2	**VERIFY RELATED REPAIR INFORMATION AVAILABILITY** • Check for related Service Bulletins and/or on-line repair information availability. • Is any related repair information available?	Yes	Perform repair or diagnosis according to the available repair information. • If the vehicle is not repaired, go to the next step.
		No	Go to the next step.
3	**INSPECT ECT SENSOR CONNECTOR FOR POOR CONNECTION** • Turn the ignition switch off. • Disconnect ECT sensor connector. • Check for poor connection (such as damaged, pulled-out pins, and corrosion). • Is there any malfunction?	Yes	Repair or replace the terminal, then go to Step 8.
		No	Go to the next step.
4	**INSPECT ECT SENSOR SIGNAL CIRCUIT FOR SHORT TO GROUND** • Turn the ignition switch off. • Disconnect PCM connector. • Check continuity between ECT sensor terminal A and body ground. • Is there continuity?	Yes	Repair or replace harness for short to ground, then go to Step 8.
		No	Go to the next step.
5	**INSPECT ECT SENSOR CIRCUIT FOR SHORT WITH EACH OTHER** • Turn the ignition switch off. • Check continuity between ECT sensor terminal A and B. • Is there continuity?	Yes	Repair or replace harness for short with each other, then go to Step 8.
		No	Go to the next step.
6	**INSPECT ECT SENSOR** • Inspect ECT sensor. (See 01–40C–29 ENGINE COOLANT TEMPERATURE (ECT) SENSOR INSPECTION [AJ].) • Is there any malfunction?	Yes	Replace ECT sensor, then go to Step 8. (See 01–40C–29 ENGINE COOLANT TEMPERATURE (ECT) SENSOR REMOVAL/INSTALLATION [AJ].)
		No	Go to the next step.
7	**INSPECT PCM CONNECTOR FOR POOR CONNECTION** • Turn the ignition switch off. • Disconnect PCM connector. • Check for poor connection (such as damaged, pulled-out pins, and corrosion). • Is there any malfunction?	Yes	Repair or replace the terminal, then go to the next step.
		No	Go to the next step.
8	**VERIFY TROUBLESHOOTING OF DTC P0117 COMPLETED** • Make sure to reconnect all disconnected connectors. • Clear DTC from PCM memory using WDS or equivalent. • Perform the KOEO or KOER SELF TEST using the WDS or equivalent. (See 01–02C–8 KOEO/KOER SELF TEST [AJ].) • Is the PENDING CODE same DTC present?	Yes	Replace PCM, then go to the next step. (See 01–40C–5 PCM REMOVAL/INSTALLATION [AJ].)
		No	Go to the next step.
9	**VERIFY AFTER REPAIR PROCEDURE** • Perform "AFTER REPAIR PROCEDURE". (See 01–02C–7 AFTER REPAIR PROCEDURE [AJ].) • Are any DTCs present?	Yes	Go to the applicable DTC inspection. (See 01–02C–13 DTC TABLE [AJ].)
		No	Troubleshooting completed.

DTC P0118 [AJ]

E6U010200000W35

DTC P0118	ECT circuit high input
DETECTION CONDITION	• The PCM monitors the ECT sensor signal at PCM terminal 2AQ. If the PCM detects ECT sensor voltage c **4.58 V or above**, the PCM determines that the ECT sensor circuit has a malfunction. **Diagnostic support note** • This is a continuous monitor (Engine cooling system). • MIL illuminates if the PCM detects the above malfunction condition during the first drive cycle. • FREEZE FRAME DATA is available. • DTC is stored in the PCM memory.
POSSIBLE CAUSE	• ECT sensor malfunction • Connector or terminal malfunction • Open circuit between ECT sensor terminal A and PCM terminal 2AQ • Short to power circuit between ECT sensor terminal A and PCM terminal 2AQ • Open circuit between ECT sensor terminal B and PCM terminal 2AJ • PCM malfunction

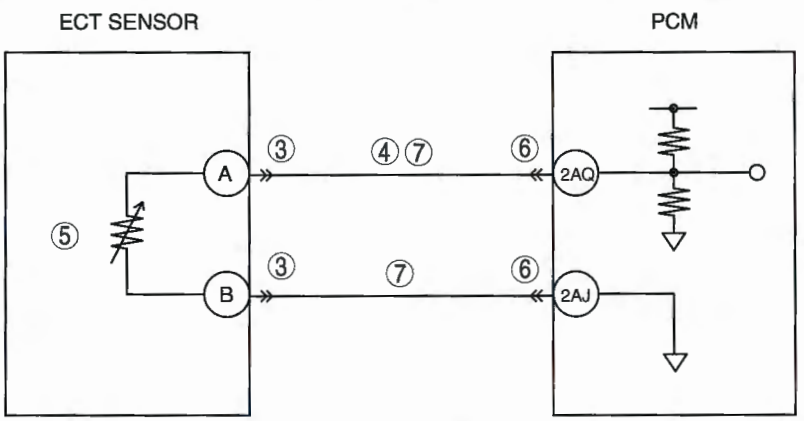

ECT SENSOR
HARNESS SIDE CONNECTOR



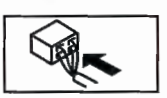

PCM
WIRING HARNESS-SIDE CONNECTOR

2BE	2BA	2AW	2AS	2AO	2AK	2AG	2AC	2Y	2U	2Q	2M	2I	2E	2A
2BF	2BB	2AX	2AT	2AP	2AL	2AH	2AD	2Z	2V	2R	2N	2J	2F	2B
2BG	2BC	2AY	2AU	2AQ	2AM	2AI	2AE	2AA	2W	2S	2O	2K	2G	2C
2BH	2BD	2AZ	2AV	2AR	2AN	2AJ	2AF	2AB	2X	2T	2P	2L	2H	2D

1BE	1BA	1AW	1AS	1AO	1AK	1AG	1AC	1Y	1U	1Q	1M	1I	1E	1A
1BF	1BB	1AX	1AT	1AP	1AL	1AH	1AD	1Z	1V	1R	1N	1J	1F	1B
1BG	1BC	1AY	1AU	1AQ	1AM	1AI	1AE	1AA	1W	1S	1O	1K	1G	1C
1BH	1BD	1AZ	1AV	1AR	1AN	1AJ	1AF	1AB	1X	1T	1P	1L	1H	1D

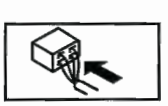

Diagnostic procedure

STEP	INSPECTION		ACTION
1	**VERIFY FREEZE FRAME DATA AND DIAGNOSTIC MONITORING TEST RESULTS HAVE BEEN RECORDED** • Have FREEZE FRAME DATA and DIAGNOSTIC MONITORING TEST RESULTS (Engine cooling system related) been recorded?	Yes	Go to the next step.
		No	Record FREEZE FRAME DATA and DIAGNOSTIC MONITORING TEST RESULTS on repair order, then go to the next step.
2	**VERIFY RELATED REPAIR INFORMATION AVAILABILITY** • Check for related Service Bulletins and/or on-line repair information availability. • Is any related repair information available?	Yes	Perform repair or diagnosis according to the available repair information. • If the vehicle is not repaired, go to the next step.
		No	Go to the next step.
3	**INSPECT ECT SENSOR CONNECTOR FOR POOR CONNECTION** • Turn the ignition switch off. • Disconnect ECT sensor connector. • Check for poor connection (such as damaged, pulled-out pins, and corrosion). • Is there any malfunction?	Yes	Repair or replace the terminal, then go to Step 8.
		No	Go to the next step.
4	**INSPECT ECT SENSOR SIGNAL CIRCUIT FOR SHORT TO POWER** • Turn the ignition switch to the ON position. • Measure voltage between ECT sensor terminal A and body ground. • Is voltage **B+**?	Yes	Repair or replace harness for short to power, then go to Step 8.
		No	Go to the next step.
5	**INSPECT ECT SENSOR** • Inspect ECT sensor. (See 01–40C–29 ENGINE COOLANT TEMPERATURE (ECT) SENSOR INSPECTION [AJ].) • Is there any malfunction?	Yes	Replace ECT sensor, then go to Step 8. (See 01–40C–29 ENGINE COOLANT TEMPERATURE (ECT) SENSOR REMOVAL/INSTALLATION [AJ].)
		No	Go to the next step.
6	**INSPECT PCM CONNECTOR FOR POOR CONNECTION** • Turn the ignition switch off. • Disconnect PCM connector. • Check for poor connection (such as damaged, pulled-out pins, and corrosion). • Is there any malfunction?	Yes	Repair or replace the terminal, then go to Step 8.
		No	Go to the next step.
7	**INSPECT ECT SENSOR CIRCUIT FOR OPEN CIRCUIT** • Turn the ignition switch off. • Check continuity between the following circuits: — ECT sensor terminal A and PCM terminal 2AQ — ECT sensor terminal B and PCM terminal 2AJ • Is there continuity?	Yes	Repair or replace harness for open circuit, then go to the next step.
		No	Go to the next step.
8	**VERIFY TROUBLESHOOTING OF DTC P0118 COMPLETED** • Make sure to reconnect all disconnected connectors. • Clear DTC from PCM memory using WDS or equivalent. • Perform the KOEO or KOER SELF TEST using the WDS or equivalent. (See 01–02C–8 KOEO/KOER SELF TEST [AJ].) • Is the PENDING CODE same DTC present?	Yes	Replace PCM, then go to the next step. (See 01–40C–5 PCM REMOVAL/INSTALLATION [AJ].)
		No	Go to the next step.
9	**VERIFY AFTER REPAIR PROCEDURE** • Perform "AFTER REPAIR PROCEDURE". (See 01–02C–7 AFTER REPAIR PROCEDURE [AJ].) • Are any DTCs present?	Yes	Go to the applicable DTC inspection. (See 01–02C–13 DTC TABLE [AJ].)
		No	Troubleshooting completed.

DTC P0122 [AJ]

E6U010200000W36

DTC P0122	TP sensor No.1 circuit low input
DETECTION CONDITION	• If the PCM detects that TP sensor No.1 voltage at PCM terminal 2AM is **0.1 V or below** after the ignition switch is ON, the PCM determines that the TP circuit has a malfunction. **Diagnostic support note** • This is a continuous monitor (CCM). • MIL illuminates if the PCM detects the above malfunction condition during the first drive cycle. • FREEZE FRAME DATA is available. • DTC is stored in the PCM memory.
POSSIBLE CAUSE	• TP sensor No.1 malfunction • Connector or terminal malfunction • Open circuit between throttle body terminal D and PCM terminal 2AR • Short to ground circuit between throttle body terminal F and PCM terminal 2AM • Open circuit between throttle body terminal F and PCM terminal 2AM • PCM malfunction

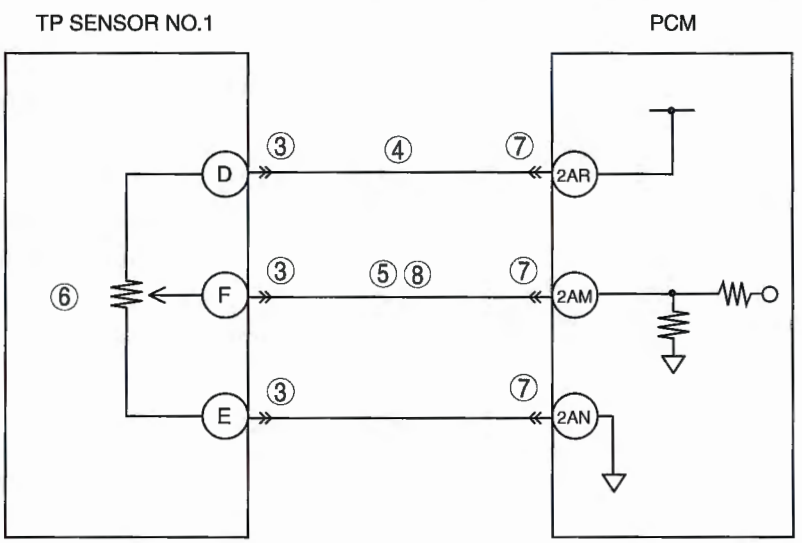

THROTTLE BODY
HARNESS SIDE CONNECTOR

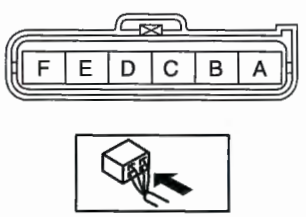

PCM
WIRING HARNESS-SIDE CONNECTOR

2BE	2BA	2AW	2AS	2AO	2AK	2AG	2AC	2Y	2U	2Q	2M	2I	2E	2A
2BF	2BB	2AX	2AT	2AP	2AL	2AH	2AD	2Z	2V	2R	2N	2J	2F	2B
2BG	2BC	2AY	2AU	2AQ	2AM	2AI	2AE	2AA	2W	2S	2O	2K	2G	2C
2BH	2BD	2AZ	2AV	2AR	2AN	2AJ	2AF	2AB	2X	2T	2P	2L	2H	2D

Diagnostic procedure

STEP	INSPECTION		ACTION
1	**VERIFY FREEZE FRAME DATA HAS BEEN RECORDED** • Has FREEZE FRAME DATA been recorded?	Yes	Go to the next step.
		No	Record FREEZE FRAME DATA on repair order, then go to the next step.
2	**VERIFY RELATED REPAIR INFORMATION AVAILABILITY** • Check for related Service Bulletins and/or on-line repair information availability. • Is any related repair information available?	Yes	Perform repair or diagnosis according to the available repair information. • If the vehicle is not repaired, go to the next step.
		No	Go to the next step.
3	**INSPECT THROTTLE BODY CONNECTOR FOR POOR CONNECTION** • Turn the ignition switch off. • Disconnect throttle body connector. • Check for poor connection (such as damaged, pulled-out pins, and corrosion). • Is there any malfunction?	Yes	Repair or replace the terminal, then go to Step 9.
		No	Go to the next step.
4	**INSPECT TP SENSOR NO.1 POWER CIRCUIT FOR OPEN CIRCUIT** **Note** • If DTC P0222 is also retrieved with P0122, then go to CONSTANT VOLTAGE troubleshooting procedure. • Turn the ignition switch to the ON position. • Measure voltage between throttle body terminal D and body ground. • Is voltage **within 4.5—5.5 V**?	Yes	Go to the next step.
		No	Repair or replace harness for open circuit, then go to Step 9.
5	**VERIFY TP SENSOR NO.1 SIGNAL CIRCUIT FOR SHORT TO GROUND** • Turn the ignition switch off. • Check continuity between throttle body terminal F and body ground. • Is there continuity?	Yes	Repair or replace harness, then go to Step 9.
		No	Go to the next step.
6	**INSPECT TP SENSOR NO.1** • Inspect TP sensor No.1. (See 01–40C–28 THROTTLE POSITION (TP) SENSOR INSPECTION [AJ].) • Is there any malfunction?	Yes	Replace throttle body, then go to Step 9. (See 01–13C–2 INTAKE AIR SYSTEM REMOVAL/ INSTALLATION [AJ].)
		No	Go to the next step.
7	**INSPECT PCM CONNECTOR FOR POOR CONNECTION** • Turn the ignition switch off. • Disconnect PCM connector. • Check for poor connection (such as damaged, pulled-out pins, and corrosion). • Is there any malfunction?	Yes	Repair or replace the terminal, then go to Step 9.
		No	Go to the next step.
8	**VERIFY TP SENSOR NO.1 SIGNAL CIRCUIT FOR OPEN CIRCUIT** • Turn the ignition switch off. • Check continuity between throttle body terminal F and PCM terminal 2AM. • Is there continuity?	Yes	Go to the next step.
		No	Repair or replace harness for open circuit, then go to the next step.
9	**VERIFY TROUBLESHOOTING OF DTC P0122 COMPLETED** • Make sure to reconnect all disconnected connectors. • Clear DTC from PCM memory using WDS or equivalent. • Perform the KOEO or KOER SELF TEST using the WDS or equivalent. (See 01–02C–8 KOEO/KOER SELF TEST [AJ].) • Is the PENDING CODE same DTC present?	Yes	Replace PCM, then go to the next step. (See 01–40C–5 PCM REMOVAL/INSTALLATION [AJ].)
		No	Go to the next step.

STEP	INSPECTION		ACTION
10	**VERIFY AFTER REPAIR PROCEDURE** • Perform "AFTER REPAIR PROCEDURE". (See 01–02C–7 AFTER REPAIR PROCEDURE [AJ].) • Are any DTCs present?	Yes	Go to the applicable DTC inspection. (See 01–02C–13 DTC TABLE [AJ].)
		No	Troubleshooting completed.

DTC P0123 [AJ]

E6U010200000W37

DTC P0123	TP sensor No.1 circuit high input
DETECTION CONDITION	• If the PCM detects that TP sensor No.1 voltage at PCM terminal 2AM is **4.9 V or above** after ignition switch is ON, the PCM determines that the TP circuit has a malfunction. **Diagnostic support note** • This is a continuous monitor (CCM). • MIL illuminates if the PCM detects the above malfunction condition during the first drive cycle. • FREEZE FRAME DATA is available. • DTC is stored in the PCM memory.
POSSIBLE CAUSE	• TP sensor No.1 malfunction • Connector or terminal malfunction • Short to power circuit between throttle body terminal F and PCM terminal 2AM • Open circuit between throttle body terminal E and PCM terminal 2AN • PCM malfunction

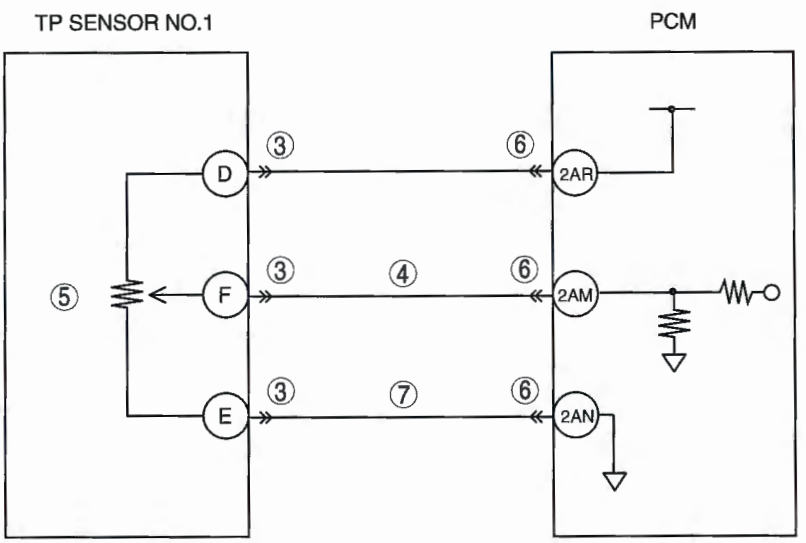

THROTTLE BODY
HARNESS SIDE CONNECTOR

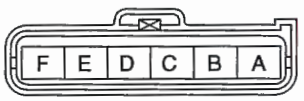

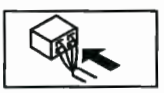

PCM
WIRING HARNESS-SIDE CONNECTOR

2BE	2BA	2AW	2AS	2AO	2AK	2AG	2AC	2Y	2U	2Q	2M	2I	2E	2A
2BF	2BB	2AX	2AT	2AP	2AL	2AH	2AD	2Z	2V	2R	2N	2J	2F	2B
2BG	2BC	2AY	2AU	2AQ	2AM	2AI	2AE	2AA	2W	2S	2O	2K	2G	2C
2BH	2BD	2AZ	2AV	2AR	2AN	2AJ	2AF	2AB	2X	2T	2P	2L	2H	2D

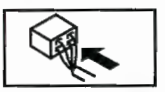

Diagnostic procedure

STEP	INSPECTION		ACTION
1	**VERIFY FREEZE FRAME DATA HAS BEEN RECORDED** • Has FREEZE FRAME DATA been recorded?	Yes	Go to the next step.
		No	Record FREEZE FRAME DATA on repair order, then go to the next step.
2	**VERIFY RELATED REPAIR INFORMATION AVAILABILITY** • Check for related Service Bulletins and/or on-line repair information availability. • Is any related repair information available?	Yes	Perform repair or diagnosis according to the available repair information. • If the vehicle is not repaired, go to the next step.
		No	Go to the next step.
3	**INSPECT THROTTLE BODY CONNECTOR FOR POOR CONNECTION** • Turn the ignition switch off. • Disconnect throttle body connector. • Check for poor connection (such as damaged, pulled-out pins, and corrosion). • Is there any malfunction?	Yes	Repair or replace the terminal, then go to Step 8.
		No	Go to the next step.
4	**INSPECT TP SENSOR NO.1 SIGNAL CIRCUIT FOR SHORT TO POWER** • Turn the ignition switch to the ON position. • Measure voltage between throttle body terminal F and body ground. • Is voltage **B+**?	Yes	Repair or replace harness for short to power, then go to Step 8.
		No	Go to the next step.
5	**INSPECT TP SENSOR NO.1** • Inspect TP sensor No.1. (See 01–40C–28 THROTTLE POSITION (TP) SENSOR INSPECTION [AJ].) • Is there any malfunction?	Yes	Replace throttle body, then go to Step 8. (See 01–13C–2 INTAKE AIR SYSTEM REMOVAL/ INSTALLATION [AJ].)
		No	Go to the next step.
6	**INSPECT PCM CONNECTOR FOR POOR CONNECTION** • Turn the ignition switch off. • Disconnect PCM connector. • Check for poor connection (such as damaged, pulled-out pins, and corrosion). • Is there any malfunction?	Yes	Repair or replace the terminal, then go to Step 8.
		No	Go to the next step.
7	**INSPECT TP SENSOR NO.1 GROUND CIRCUIT FOR OPEN CIRCUIT** • Turn the ignition switch off. • Check continuity between throttle body terminal E and PCM terminal 2AN. • Is there continuity?	Yes	Go to the next step.
		No	Repair or replace harness for open circuit, then go to the next step.
8	**VERIFY TROUBLESHOOTING OF DTC P0123 COMPLETED** • Make sure to reconnect all disconnected connectors. • Clear DTC from PCM memory using WDS or equivalent. • Perform the KOEO or KOER SELF TEST using the WDS or equivalent. (See 01–02C–8 KOEO/KOER SELF TEST [AJ].) • Is the PENDING CODE same DTC present?	Yes	Replace PCM, then go to the next step. (See 01–40C–5 PCM REMOVAL/INSTALLATION [AJ].)
		No	Go to the next step.
9	**VERIFY AFTER REPAIR PROCEDURE** • Perform "AFTER REPAIR PROCEDURE". (See 01–02C–7 AFTER REPAIR PROCEDURE [AJ].) • Are any DTCs present?	Yes	Go to the applicable DTC inspection. (See 01–02C–13 DTC TABLE [AJ].)
		No	Troubleshooting completed.

DTC P0125 [AJ]

E6U010200000W38

DTC P0125	Excessive time to enter closed loop fuel control
DETECTION CONDITION	• The PCM monitors the ECT sensor signal at PCM terminal 2AQ after the engine is cold started. If the Engine coolant temperature does not reach the expected temperature in a certain period, the PCM determines that it has taken an excessive amount of time for the engine coolant temperature to reach the temperature necessary to start the closed-loop fuel control. **Diagnostic support note** • This is a continuous monitor (Engine cooling system). • MIL illuminates if the PCM detects the above malfunction condition in two consecutive drive cycles or in one drive cycle while the DTC for the same malfunction has been stored in the PCM. • PENDING CODE is available if the PCM detects the above malfunction condition during the first drive cycle. • FREEZE FRAME DATA is available. • DTC is stored in PCM memory.
POSSIBLE CAUSE	• ECT sensor malfunction • Connector or terminal malfunction • Engine cooling system malfunction • PCM malfunction

Diagnostic procedure

STEP	INSPECTION		ACTION
1	**VERIFY FREEZE FRAME DATA AND DIAGNOSTIC MONITORING TEST RESULTS HAVE BEEN RECORDED** • Have FREEZE FRAME DATA and DIAGNOSTIC MONITORING TEST RESULTS (Engine cooling system related) been recorded?	Yes	Go to the next step.
		No	Record FREEZE FRAME DATA and DIAGNOSTIC MONITORING TEST RESULTS on repair order, then go to the next step.
2	**VERIFY RELATED REPAIR INFORMATION AVAILABILITY** • Check for related Service Bulletins and/or on-line repair information availability. • Is any related repair information available?	Yes	Perform repair or diagnosis according to the available repair information. • If the vehicle is not repaired, go to the next step.
		No	Go to the next step.
3	**VERIFY CURRENT INPUT SIGNAL STATUS-IS CONCERN INTERMITTENT OR CONSTANT** • Start engine. • Warm up engine completely. • Access ECT PID using the WDS or equivalent. • Is ECT PID **60 °C {140 °F} or above**?	Yes	Intermittent concern exists. Go to "INTERMITTENT CONCERNS TROUBLESHOOTING". (See 01–03C–5 INTERMITTENT CONCERN TROUBLESHOOTING [AJ].)
		No	Go to the next step.
4	**INSPECT ECT SENSOR CONNECTOR FOR POOR CONNECTION** • Turn the ignition switch off. • Disconnect ECT sensor connector. • Check for poor connection (such as damaged, pulled-out pins, and corrosion). • Is there any malfunction?	Yes	Repair or replace the terminal, then go to Step 8.
		No	Go to the next step.
5	**INSPECT ECT SENSOR** • Inspect ECT sensor. (See 01–40C–29 ENGINE COOLANT TEMPERATURE (ECT) SENSOR INSPECTION [AJ].) • Is there any malfunction?	Yes	Replace ECT sensor, then go to Step 8. (See 01–40C–29 ENGINE COOLANT TEMPERATURE (ECT) SENSOR REMOVAL/INSTALLATION [AJ].)
		No	Go to the next step.
6	**INSPECT ENGINE COOLANT SYSTEM** • Inspect the following items. — Cooling system cap — Radiator — Thermostat — Water pump — Cooling fan • Are they normal?	Yes	Go to the next step.
		No	Repair or replace necessary part, then go to Step 8.
7	**INSPECT PCM CONNECTOR FOR POOR CONNECTION** • Turn the ignition switch off. • Disconnect PCM connector. • Check for poor connection (such as damaged, pulled-out pins, and corrosion). • Is there any malfunction?	Yes	Repair or replace the terminal, then go to the next step.
		No	Go to the next step.
8	**VERIFY TROUBLESHOOTING OF DTC P0125 COMPLETED** • Make sure to reconnect all disconnected connectors. • Turn the ignition switch to the ON position. • Clear the DTC from the PCM memory using the WDS or equivalent. • Access ECT PID using the WDS or equivalent. • Wait until ECT PID **8.4 °C {47.1 °F} or below**. • Start engine and warm up it completely. • Is PENDING CODE for this DTC present?	Yes	Replace PCM, then go to the next step. (See 01–40C–5 PCM REMOVAL/INSTALLATION [AJ].)
		No	Go to the next step.
9	**VERIFY AFTER REPAIR PROCEDURE** • Perform "AFTER REPAIR PROCEDURE". (See 01–02C–7 AFTER REPAIR PROCEDURE [AJ].) • Are any DTCs present?	Yes	Go to the applicable DTC inspection. (See 01–02C–13 DTC TABLE [AJ].)
		No	Troubleshooting completed.

DTC P0126, P0128 [AJ]

E6U010200000W39

DTC P0126 DTC P0128	Coolant thermostat
DETECTION CONDITION	**DTC P0126** • If the ECT signal never exceeds **71 °C {160 °F}** after the engine runs for a certain period, the PCM determines that the coolant thermostat is stuck open. **MONITORING CONDITIONS** — IAT: **–10 °C {14 °F} or above** — Vehicle speed: **6.0 km/h {3.7 mph} or above** (MTX) — Vehicle speed: **9.4 km/h {5.8 mph} or above** (ATX) **DTC P0128** • The PCM monitors MAF, IAT, VSS and ECT signals and calculates the radiator heat radiation ratio when the following monitoring conditions are met. If the calculated value exceeds the threshold, the PCM determines that the coolant thermostat is stuck open. **MONITORING CONDITIONS** — ECT at engine start: **36 °C {97 °F} or below** — IAT: **–10 °C {14 °F} or above** — Difference between ECT at engine start and minimum IAT: **6 °C {10.8 °F} or below** — Vehicle speed: **30 km/h {18.6 mph} or above** (MTX) — Vehicle speed: **20 km/h {12.4 mph} or above** (ATX) **Diagnostic support note** • This is an intermittent monitor (Engine cooling system). • MIL illuminates if the PCM detects the above malfunction condition in two consecutive drive cycles or in one drive cycle while the DTC for the same malfunction has been stored in the PCM. • PENDING CODE is available if the PCM detects the above malfunction condition during the first drive cycle. • DIAGNOSTIC MONITORING TEST RESULTS is available. • FREEZE FRAME DATA is available. • DTC is stored in PCM memory.
POSSIBLE CAUSE	• ECT sensor malfunction • Coolant thermostat malfunction • PCM malfunction

Diagnostic procedure

STEP	INSPECTION		ACTION
1	**VERIFY FREEZE FRAME DATA AND DIAGNOSTIC MONITORING TEST RESULTS HAVE BEEN RECORDED** • Have FREEZE FRAME DATA and DIAGNOSTIC MONITORING TEST RESULTS (Engine cooling system related) been recorded?	Yes	Go to the next step.
		No	Record FREEZE FRAME DATA and DIAGNOSTIC MONITORING TEST RESULTS on repair order, then go to the next step.
2	**VERIFY RELATED REPAIR INFORMATION AVAILABILITY** • Check for related Service Bulletins and/or on-line repair information availability. • Is any related repair information available?	Yes	Perform repair or diagnosis according to the available repair information. • If the vehicle is not repaired, go to the next step.
		No	Go to the next step.
3	**INSPECT FOR OTHER DTCS** • Have other DTCs been stored?	Yes	Go to appropriate DTC troubleshooting procedure, then go to the next step. (See 01–02C–13 DTC TABLE [AJ].)
		No	Go to the next step.
4	**INSPECT COOLANT THERMOSTAT IS WHETHER STUCK OPEN** • Inspect coolant thermostat. (See 01–12A–10 THERMOSTAT INSPECTION [L3, AJ].) • Is there any malfunction?	Yes	Replace coolant thermostat, then go to the next step. (See 01–40C–29 ENGINE COOLANT TEMPERATURE (ECT) SENSOR REMOVAL/INSTALLATION [AJ].)
		No	Inspect ECT sensor. (See 01–40C–29 ENGINE COOLANT TEMPERATURE (ECT) SENSOR INSPECTION [AJ].) • Replace ECT sensor if necessary, then go to the next step. (See 01–40C–29 ENGINE COOLANT TEMPERATURE (ECT) SENSOR REMOVAL/INSTALLATION [AJ].)

STEP	INSPECTION		ACTION
5	**VERIFY MONITORING CONDITION FOR REPAIR VERIFICATION** • Make sure to reconnect all disconnected connectors. • Cool down engine. **Note** • If temperature difference inside/ outside workshop is significant, PCM might not operate thermostat monitor. Therefore, it is recommended to cool down engine out of workshop. • Turn the ignition switch to the ON position. • Clear the DTC from the PCM memory using the WDS or equivalent. • Access ECT, IAT PIDs and make sure that each value is within following specifications. — ECT: **36 °C {97 °F} or below** (for P0128 only) — IAT: **–10°C {14°F} or above** — Difference between ECT and IAT: **6°C {43°F} or below** • Is there any PID that is out of specification?	Yes	Take corrective action (e.g. cool down engine), then repeat this step.
		No	Go to the next step for DTC P0126 or go to step 7 for DTC P0128.
6	**VERIFY TROUBLESHOOTING OF DTC P0126 COMPLETED** • Start engine and turn off E/L and A/C. • Access DIAGNOSTIC MONITORING TEST RESULTS using the WDS or equivalent and monitor TEST#10: E1: 81 (ECT). **Note** • This test requires actual driving. Chassis roller cannot be used for this test. • During test drive, constant speed should be maintained, although 2 or 3 stops during every **5 min** of driving time (e.g. for traffic signals) is acceptable. Stop-and-go (e.g. in case of traffic congestion) is not acceptable during the test period. • Test period depends on ECT at engine start. (e.g. if ECT is **–10°C {14°F}**, monitoring period is **38 min** and ECT is **30 °C {86 °F}**, monitoring period is **8 min**) • Verify TEST #10: E1: 81 (ECT) value. • Is value above minimum value?	Yes	Go to Step 8.
		No	Replace PCM, then go to Step 8. (See 01–40C–5 PCM REMOVAL/INSTALLATION [AJ].)
7	**VERIFY TROUBLESHOOTING OF DTC P0128 COMPLETED** • Start engine and turn off E/L and A/C. • Access DIAGNOSTIC MONITORING TEST RESULTS using the WDS or equivalent and monitor TEST #10: E1: 80 (Heat radiation ratio) or #10: E1: 1 (ECT). **Note** • This test requires actual driving. Chassis roller cannot be used for this test. • During test drive, constant speed should be maintained, although 2 or 3 stops (e.g. for traffic signals) is acceptable. Stop-and-go (e.g. in case of traffic congestion) is not acceptable during the test period. • Verify TEST#10: E1: 80 (Heat radiation ratio) or #10: E2: 81 (ECT) value. • Are value of TEST#10: E1: 80 (Heat radiation ratio) below maximum value and value of TEST#10: E1: 81 (ECT) above minimum value?	Yes	Go to the next step.
		No	Replace PCM, then go to the next step. (See 01–40C–5 PCM REMOVAL/INSTALLATION [AJ].)

STEP	INSPECTION		ACTION
8	**VERIFY AFTER REPAIR PROCEDURE** • Perform "AFTER REPAIR PROCEDURE". (See 01–02C–7 AFTER REPAIR PROCEDURE [AJ].) • Are any DTCs present?	Yes	Go to the applicable DTC inspection. (See 01–02C–13 DTC TABLE [AJ].)
		No	Troubleshooting completed.

DTC P0131, P0151 [AJ]

E6U010200000WC3

DTC P0131 DTC P0151	**HO2S (RF) circuit low input** **HO2S (LF) circuit low input**
DETECTION CONDITION	• The PCM monitors the front HO2S output voltage when the following conditions are met. If output voltage is less than **0.1 V** for **41 s**, the PCM determines that the front HO2S signal remains lean. **MONITORING CONDITION** — Fuel injection control system status: feedback zone • The PCM monitors the input voltage from the front HO2S when the following conditions are met. Under the following monitoring conditions, if the input voltage from the front HO2S does not even **exceed 0.1 V** though the short term fuel trim is controlled up to **25%** for **9.6 s**, the PCM determines that sensor circuit is not activated. **MONITORING CONDITIONS** — HO2S, HO2S heater and TWC Repair Verification Drive Mode — Following conditions are met • Time from engine start is **above 50 s** (ECT when engine start is **20 °C {68 °F}**). **Diagnostic support note** • This is a continuous monitor (HO2S). • MIL illuminates if the PCM detects the above malfunctioning condition in two consecutive drive cycles or in one drive cycle while the DTC for the same malfunction has been stored in the PCM. • PENDING CODE is available if the PCM detects the above malfunction conditions during first drive cycle. • FREEZE FRAME DATA is available. • DTC is stored in the PCM memory.
POSSIBLE CAUSE	• HO2S (RF) malfunction • Short to ground in wiring between HO2S (RF) terminal A and PCM terminal 2AK • Open circuit between HO2S (RF) terminal A and PCM terminal 2AK • Open circuit between HO2S (RF) terminal B and PCM terminal 2AV • HO2S (LR) malfunction • Short to ground in wiring between HO2S (LF) terminal A and PCM terminal 2AL • Open circuit between HO2S (LF) terminal A and PCM terminal 2AL • Open circuit between HO2S (LF) terminal B and PCM terminal 2AX • PCM malfunction

DTC P0131	HO2S (RF) circuit low input
DTC P0151	HO2S (LF) circuit low input

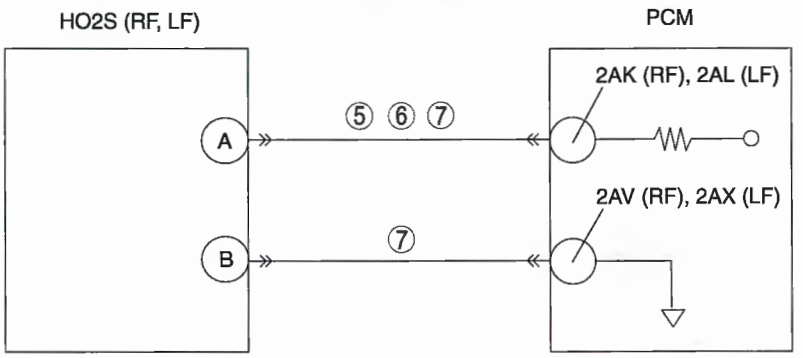

HO2S (RF, LF)
HARNESS SIDE CONNECTOR



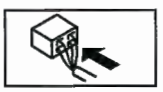

PCM
WIRING HARNESS-SIDE CONNECTOR

BE	2BA	2AW	2AS	2AO	2AK	2AG	2AC	2Y	2U	2Q	2M	2I	2E	2A
2BF	2BB	2AX	2AT	2AP	2AL	2AH	2AD	2Z	2V	2R	2N	2J	2F	2B
2BG	2BC	2AY	2AU	2AQ	2AM	2AI	2AE	2AA	2W	2S	2O	2K	2G	2C
2BH	2BD	2AZ	2AV	2AR	2AN	2AJ	2AF	2AB	2X	2T	2P	2L	2H	2D

1BE	1BA	1AW	1AS	1AO	1AK	1AG	1AC	1Y	1U	1Q	1M	1I	1E	1A
1BF	1BB	1AX	1AT	1AP	1AL	1AH	1AD	1Z	1V	1R	1N	1J	1F	1B
1BG	1BC	1AY	1AU	1AQ	1AM	1AI	1AE	1AA	1W	1S	1O	1K	1G	1C
1BH	1BD	1AZ	1AV	1AR	1AN	1AJ	1AF	1AB	1X	1T	1P	1L	1H	1D

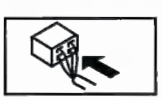

Diagnostic procedure

STEP	INSPECTION		ACTION
1	**VERIFY FREEZE FRAME DATA AND DIAGNOSTIC MONITORING TEST RESULTS HAVE BEEN RECORDED** • Have FREEZE FRAME DATA and DIAGNOSTIC MONITORING TEST RESULTS (HO2S related) been recorded?	Yes	Go to the next step.
		No	Record the FREEZE FRAME DATA and DIAGNOSTIC MONITORING TEST RESULTS on the repair order, then go to next step.
2	**VERIFY RELATED REPAIR INFORMATION AVAILABILITY** • Verify related Service Bulletins and/or on-line repair information availability. • Is any related repair information available?	Yes	Perform repair or diagnosis according to the available repair information. If the vehicle is not repaired, go to next step.
		No	Go to the next step.
3	**VERIFY RELATED PENDING CODE OR STORED DTC** • Turn the ignition switch off, then ON position (Engine off). • Verify the related PENDING CODE or stored DTCs using WDS or equivalent. • Is other DTC present?	Yes	Go to appropriate DTC troubleshooting procedure. (See 01–02C–13 DTC TABLE [AJ].)
		No	Go to the next step.
4	**IDENTIFY TRIGGER DTC FOR FREEZE FRAME DATA** • Is DTC P0131 or P0151 on FREEZE FRAME DATA?	Yes	Go to the next step.
		No	Go to troubleshooting for DTC on FREEZE FRAME DATA. (See 01–02C–13 DTC TABLE [AJ].)
5	**INSPECT FRONT HO2S SIGNAL CIRCUIT FOR SHORT TO GROUND AT HARNESS** • Turn the ignition switch off. • Disconnect rear HO2S and PCM connectors. • Verify the continuity between following HO2S terminal A (wiring harness side) and body ground. • Is there continuity?	Yes	Replace short to ground circuit, then go to Step 8.
		No	Go to the next step.
6	**INSPECT FRONT HO2S SIGNAL CIRCUIT FOR SHORT TO GROUND AT FRONT HO2S** • Rear HO2S connector disconnected. • Verify the continuity between following HO2S terminal A (part side) and body ground. • Is there continuity?	Yes	Replace suspected HO2S then go to the next step.
		No	Go to the next step.
7	**INSPECT FRONT HO2S CIRCUIT FOR OPEN CIRCUIT** • Turn the ignition switch off. • Check continuity between the following circuits: — HO2S terminal A and PCM terminal 2AK (RF), 2AL (LF) — HO2S terminal B and PCM terminal 2AV (RF), 2AX (LF) • Is there continuity?	Yes	Repair or replace harness for open circuit, then go to the next step.
		No	Go to the next step.
8	**VERIFY TROUBLESHOOTING OF DTC P0131 OR P0151 COMPLETED** • Make sure to reconnect all disconnected connectors. • Clear DTC from PCM memory using WDS or equivalent. • Perform the KOEO or KOER SELF TEST using the WDS or equivalent. (See 01–02C–8 KOEO/KOER SELF TEST [AJ].) • Is the PENDING CODE same DTC present?	Yes	Replace PCM, then go to next step. (See 01–40C–5 PCM REMOVAL/INSTALLATION [AJ].)
		No	Go to the next step.
9	**VERIFY AFTER REPAIR PROCEDURE** • Perform "After Repair Procedure". (See 01–02C–7 AFTER REPAIR PROCEDURE [AJ].) • Is there any DTC present?	Yes	Go to applicable DTC inspection. (See 01–02C–13 DTC TABLE [AJ].)
		No	Troubleshooting completed.

DTC P0132, P0152 [AJ]

E6U010200000W40

DTC P0132 DTC P0152	**HO2S (RF) circuit high input** **HO2S (LF) circuit high input**
DETECTION CONDITION	• PCM monitors the input voltage the from HO2S (RF, LF). If the PCM detected HO2S (RF, LF) voltage **above 1.2 V** for **0.8 s**, the PCM determines that the circuit input is high. **Diagnostic support note** • This is a continuous monitor (HO2S). • The MIL illuminates if the PCM detects the above malfunction condition in two consecutive drive cycles or in one drive cycle while the DTC for the same malfunction has been stored in the PCM. • PENDING CODE is available if the PCM detects the above malfunction condition during the first drive cycle. • FREEZE FRAME DATA is available. • The DTC is stored in the PCM memory.
POSSIBLE CAUSE	• HO2S (RF, LF) malfunction • Short to power supply in the wiring harness between the following terminals: — For P0132: HO2S (RF) terminal A and PCM terminal 2AK — For P0152: HO2S (LF) terminal A and PCM terminal 2AL • HO2S (RF, LF) or the PCM terminal is shorted • PCM malfunction

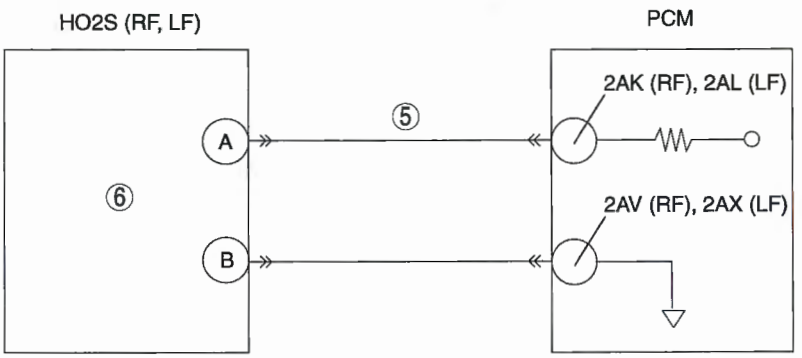

HO2S (RF, LF)
HARNESS SIDE CONNECTOR

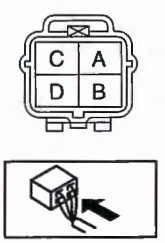

PCM
WIRING HARNESS-SIDE CONNECTOR

2BE	2BA	2AW	2AS	2AO	2AK	2AG	2AC	2Y	2U	2Q	2M	2I	2E	2A
2BF	2BB	2AX	2AT	2AP	2AL	2AH	2AD	2Z	2V	2R	2N	2J	2F	2B
2BG	2BC	2AY	2AU	2AQ	2AM	2AI	2AE	2AA	2W	2S	2O	2K	2G	2C
2BH	2BD	2AZ	2AV	2AR	2AN	2AJ	2AF	2AB	2X	2T	2P	2L	2H	2D

1BE	1BA	1AW	1AS	1AO	1AK	1AG	1AC	1Y	1U	1Q	1M	1I	1E	1A
1BF	1BB	1AX	1AT	1AP	1AL	1AH	1AD	1Z	1V	1R	1N	1J	1F	1B
1BG	1BC	1AY	1AU	1AQ	1AM	1AI	1AE	1AA	1W	1S	1O	1K	1G	1C
1BH	1BD	1AZ	1AV	1AR	1AN	1AJ	1AF	1AB	1X	1T	1P	1L	1H	1D

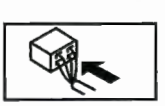

Diagnostic procedure

STEP	INSPECTION		ACTION
1	**VERIFY FREEZE FRAME DATA AND DIAGNOSTIC MONITORING TEST RESULTS HAVE BEEN RECORDED** • Have FREEZE FRAME DATA and DIAGNOSTIC MONITORING TEST RESULTS (HO2S related) been recorded?	Yes	Go to the next step.
		No	Record FREEZE FRAME DATA and DIAGNOSTIC MONITORING TEST RESULTS on repair order, then go to the next step.
2	**VERIFY RELATED REPAIR INFORMATION AVAILABILITY** • Check for related Service Bulletins and/or on-line repair information availability. • Is any related repair information available?	Yes	Perform the repair or diagnosis according to the available repair information. • If the vehicle is not repaired, go to the next step.
		No	Go to the next step.
3	**VERIFY RELATED PENDING OR STORED DTCs** • Turn the ignition switch to off, then ON (Engine off). • Verify the pending code or stored DTCs using the WDS or equivalent. • Are other DTCs present?	Yes	Go to the appropriate DTC troubleshooting procedures. (See 01–02C–13 DTC TABLE [AJ].)
		No	Go to the next step.
4	**IDENTIFY TRIGGER DTC FOR FREEZE FRAME DATA** • Is DTC P0132 or P0152 in the FREEZE FRAME DATA?	Yes	Go to the next step.
		No	Go to the troubleshooting procedures for the DTC in the FREEZE FRAME DATA. (See 01–02C–13 DTC TABLE [AJ].)
5	**INSPECT HO2S (RF, LF) SIGNAL CIRCUIT FOR SHORT TO POWER SUPPLY** • Turn the ignition switch off. • Disconnect the HO2S (RF, LF) connector. • Turn the ignition switch to the ON position (Engine off). • Measure the voltage between the following terminals: — For P0132: HO2S (RF) terminal A and body ground — For P0152: HO2S (LF) terminal A and body ground • Is there any voltage?	Yes	Replace a short to power supply, then go to Step 7.
		No	Go to the next step.
6	**INSPECT HO2S (RF, LF)** • Perform the "HEATED OXYGEN SENSOR (HO2S) INSPECTION". (See 01–40C–33 HEATED OXYGEN SENSOR (HO2S) INSPECTION [AJ].) • Is the front HO2S normal?	Yes	Go to the next step.
		No	Replace the sensor, then go to the next step.
7	**VERIFY TROUBLESHOOTING OF DTC P0132 OR P0152 COMPLETED** • Make sure to reconnect all disconnected connectors. • Clear DTC from PCM memory using WDS or equivalent. • Perform the KOEO or KOER SELF TEST using the WDS or equivalent. (See 01–02C–8 KOEO/KOER SELF TEST [AJ].) • Is the PENDING CODE same DTC present?	Yes	Replace the 0PCM, then go to the next step. (See 01–40C–5 PCM REMOVAL/INSTALLATION [AJ].)
		No	Go to the next step.
8	**VERIFY AFTER REPAIR PROCEDURE** • Perform the "After Repair Procedure". (See 01–02C–7 AFTER REPAIR PROCEDURE [AJ].) • Are any DTCs present?	Yes	Go to the applicable DTC inspection. (See 01–02C–13 DTC TABLE [AJ].)
		No	Troubleshooting completed.

DTC P0133, P0153 [AJ]

E6U010200000W41

DTC P0133 **DTC P0153**	**HO2S (RF) circuit malfunction** **HO2S (LF) circuit malfunction**
DETECTION CONDITION	• The PCM monitors the inversion cycle period, lean-to-rich response time and rich-to-lean response time of the sensor. The PCM calculated the average of the invention cycle period specified invention cycles, average response time from lean-to-rich, and from rich-to-lean when the following monitoring conditions are met. If the following condition, the PCM determines that the circuit has a malfunction. — The average valve of invention cycle period or lean-to-rich/rich-to-lean response time is more than the threshold value. **MONITORING CONDITIONS** — Drive mode 3 — The following conditions are to be met: • Calculation load **18—58%**, (at engine speed **2,000 rpm**) • Engine speed **1,400—2,500 rpm** (MTX) • Engine speed **1,200—2,500 rpm** (ATX) • Engine coolant temperature is **–10 °C {14 °F} or above** • Front HO2S signal invention cycle is **above 10 cycle** • The inversion cycle period and the lean-to-rich/ rich-to-lean response time cannot be measured even once even though the accumulated occurrence time of the following monitoring conditions has exceeded the prescribed time limit. **MONITORING CONDITIONS** — Drive mode 3 — The following conditions are to be met: • Calculation load **18—58%**, (at engine speed **2,000 rpm**) • Engine speed **1,400—2,500 rpm** (MTX) • Engine speed **1,200—2,500 rpm** (ATX) • Engine coolant temperature is **–10 °C {14 °F} or above** **Diagnostic support note** • This is an intermittent monitor (HO2S). • The MIL illuminates if the PCM detects the above malfunction condition in two consecutive drive cycles or in one drive cycle while the DTC for the same malfunction has been stored in the PCM. • PENDING CODE is available if the PCM detects the above malfunction condition during the first drive cycle. • DIAGNOSTIC MONITORING TEST RESULTS is available. • FREEZE FRAME DATA is available. • The DTC is stored in the PCM memory.
POSSIBLE CAUSE	• HO2S (RF, LF) deterioration • HO2S (RF, LF) heater malfunction • Looseness front HO2S • Leakage exhaust system • Fuel filter clogged or restricted • Fuel pump malfunction • Fuel leakage on fuel line from fuel distribution pipe and fuel pump • Pressure regulator malfunction • Fuel return hose clogged • Purge solenoid hoses improper connection • Purge solenoid valve malfunction • Insufficient compression • Engine malfunction • PCM malfunction

Diagnostic procedure

STEP	INSPECTION		ACTION
1	**VERIFY FREEZE FRAME DATA AND DIAGNOSTIC MONITORING TEST RESULTS HAVE BEEN RECORDED** • Have FREEZE FRAME DATA and DIAGNOSTIC MONITORING TEST RESULTS (HO2S related) been recorded?	Yes	Go to the next step.
		No	Record FREEZE FRAME DATA and DIAGNOSTIC MONITORING TEST RESULTS on repair order, then go to the next step.
2	**VERIFY RELATED REPAIR INFORMATION AVAILABILITY** • Check for related Service Bulletins and/or on-line repair information availability. • Is any related repair information available?	Yes	Perform the repair or diagnosis according to the available repair information. • If the vehicle is not repaired, go to the next step.
		No	Go to the next step.

STEP	INSPECTION		ACTION
3	**VERIFY RELATED PENDING CODE OR STORED DTCs** • Turn the ignition switch to off, then ON (Engine off). • Verify pending codes or stored DTCs using the WDS or equivalent. • Are the following DTCs also present? — P0442 or P0443 with P0133 — P0442 or P0443 with P0153	Yes	Go to the appropriate DTC troubleshooting procedures, then go to Step 13. (See 01–02C–13 DTC TABLE [AJ].)
		No	Go to the next step.
4	**IDENTIFY TRIGGER DTC FOR FREEZE FRAME DATA** • Is DTC P0133 or P0153 in the FREEZE FRAME DATA?	Yes	Go to the next step.
		No	Go to the troubleshooting procedures for the DTC in the FREEZE FRAME DATA. (See 01–02C–13 DTC TABLE [AJ].)
5	**VERIFY CURRENT INPUT SIGNAL STATUS** • Warm up the engine. • Access the O2S11 for P0133 or O2S21 for P0153 PID using the WDS or equivalent. • Check the PID under the following accelerator pedal conditions (in PARK or NEUTRAL). • Is the PID reading normal? — **0.55 V or more** when the accelerator pedal is suddenly depressed (rich condition). — **0.55 V or less** just after release of accelerator pedal (lean condition).	Yes	Go to step 8.
		No	Go to the next step.
6	**INSPECT INSTALLATION OF HO2S (RF, LF)** • Check if the HO2S (RF, LF) is loosely installed. • Is the sensor installed securely?	Yes	Go to the next step.
		No	Retighten the HO2S (RF, LF), then go to Step 13. (See 01–15C–2 EXHAUST SYSTEM REMOVAL/ INSTALLATION [AJ].)
7	**INSPECT GAS LEAKAGE FROM EXHAUST SYSTEM** • Visually check if any gas leakage is found between the exhaust manifold and the HO2S (RF, LF). (See 01–15C–1 EXHAUST SYSTEM INSPECTION [AJ].) • Is there gas leakage?	Yes	Repair or replace any faulty exhaust parts, then go to Step 13. (See 01–15C–2 EXHAUST SYSTEM REMOVAL/ INSTALLATION [AJ].)
		No	Replace the HO2S (RF, LF), then go to Step 13. (See 01–15C–2 EXHAUST SYSTEM REMOVAL/ INSTALLATION [AJ].)
8	**INSPECT LONG TERM FUEL TRIM** • Access the following PIDs: — For P0133: LONGFT1 — For P0153: LONGFT2 • Compare it with the FREEZE FRAME DATA recorded in Step 1. • Is it below the FFD value?	Yes	Engine is driven under a rich condition. Go to the next step.
		No	Engine is driven under a lean condition. Go to Step 10.
9	**INSPECT FUEL LINE PRESSURE (EXCESSIVE FUEL LINE PRESSURE)** • Turn the ignition switch off. • Inspect fuel line pressure when engine running. (See 01–14A–7 FUEL LINE PRESSURE INSPECTION [L3, AJ].) • Is there any malfunction?	Yes	Replace the fuel pump unit, then go to Step 13. (See 01–14A–13 FUEL PUMP UNIT REMOVAL/ INSTALLATION [L3, AJ].)
		No	Go to the next step.
10	**INSPECT FUEL LINE PRESSURE (LOW FUEL LINE PRESSURE)** • Turn the ignition switch off. • Inspect the fuel line pressure when the engine is running. (See 01–14A–7 FUEL LINE PRESSURE INSPECTION [L3, AJ].) • Is there any malfunction?	Yes	Go to the next step.
		No	Go to step 13.
11	**INSPECT FUEL LINE FROM FUEL PUMP TO FUEL DELIVERY PIPE** • Visually inspect fuel line for any leakage. • Is any fuel leakage found?	Yes	Replace the suspected fuel line, then go to Step 13.
		No	Inspect the low-pressure side fuel filter for the following: • Foreign material or staining inside fuel filter Perform the following actions as result. • If foreign material or staining is found inside fuel filter (low-pressure side), clean the fuel tank and filter. • If normal, replace the fuel pump unit. (See 01–14A–13 FUEL PUMP UNIT REMOVAL/ INSTALLATION [L3, AJ].) Then go to Step 13.

STEP	INSPECTION		ACTION
12	**INSPECT SEALING OF ENGINE COOLANT PASSAGE** **Warning** • **Removing the radiator cap when the radiator is hot is dangerous. Scalding coolant and steam may shoot out and cause serious injury.** • **When removing the radiator cap, wrap a thick cloth around it and turn it slowly.** • Remove radiator cap. • Bleed air from the engine coolant, then run the engine at idle. • Are there any small bubbles, which make engine coolant white at the filler opening? **Note** • Large bubbles are normal since they are remaining air coming from the engine coolant passage.	Yes	Air penetrates due to poor sealing on the head gasket or other areas between the combustion chamber and the engine coolant passage. Repair or replace malfunctioning parts, then go to the next step.
		No	Go to the next step.
13	**VERIFY TROUBLESHOOTING OF DTC P0133 or P0153 COMPLETED** • Make sure to reconnect all disconnected connectors. • Turn the ignition switch to the ON position (Engine off). • Clear the DTC from memory using the WDS or equivalent. • Start the engine. • Run DRIVE MODE 1 and 3. (See 01–02C–8 OBD-II DRIVE MODE [AJ].) • Stop the vehicle and access the ON BOARD SYSTEM READINESS TEST (Mode 1) to inspect the DRIVE MODE completion status. • Verify O2S_EVAL PID changes to Yes. — If not, run the DRIVE MODE again. • Access the DIAGNOSTIC MONITORING TEST RESULTS. • Verify the following TEST # values: (See 01–02C–12 DIAGNOSTIC MONITORING TEST RESULTS [AJ].) — For P0133: • 10: 01: 05 (HO2S (RF) rich-to-lean response time). • 10: 01: 06 (HO2S (RF) lean-to-rich response time). • 10: 01: 0A (HO2S (RF) inversion cycles) — For P0153: • 10: 05: 05 (HO2S (LF) rich-to-lean response time • 10: 05: 06 (HO2S (LF) lean-to-rich response time • 10: 05: 0A (HO2S (LF) inversion cycles • Are they all below the MAX value?	Yes	Replace the PCM, then go to the next step. (See 01–40C–5 PCM REMOVAL/INSTALLATION [AJ].)
		No	Go to the next step.
14	**VERIFY AFTER REPAIR PROCEDURE** • Perform the "AFTER REPAIR PROCEDURE". (See 01–02C–7 AFTER REPAIR PROCEDURE [AJ].) • Are any DTCs present?	Yes	Go to the applicable DTC inspection. (See 01–02C–13 DTC TABLE [AJ].)
		No	Troubleshooting completed.

DTC P0134, P0154 [AJ]

E6U010200000W42

DTC P0134 **DTC P0154**	**HO2S (RF) circuit no activity detected** **HO2S (LF) circuit no activity detected**
DETECTION CONDITION	• The PCM monitors the input voltage from the HO2S (RF,LF) when the following conditions are met. Unde the following monitoring conditions, if the input voltage from the front HO2S does not even **exceed 0.55 V** though the short term fuel trim is controlled up to **25%** for **9.6 s**, the PCM determines that sensor circuit is not activated. **MONITORING CONDITIONS** — Drive mode 3 — The following conditions are to be met • Time from engine start is **above 50 s** (ECT when engine start is **20 °C {68 °F}**). — HO2S (RF,LF) voltage is **above 0.1 V** **Diagnostic support note** • This is an intermittent monitor (HO2S). • MIL illuminates if the PCM detects the above malfunction condition in two consecutive drive cycles or in one drive cycle while the DTC for the same malfunction has been stored in the PCM. • PENDING CODE is available if the PCM detects the above malfunction condition during the first drive cycle. • FREEZE FRAME DATA is available. • DTC is stored in the PCM memory.
POSSIBLE CAUSE	• HO2S (RF, LF) deterioration • HO2S heater (RF, LF) malfunction • Leakage exhaust system • Open or short to ground circuit between HO2S (RF, LF) terminal and PCM terminal — For P0134: HO2S (RF) terminal A and PCM terminal 2AK — For P0154: HO2S (LF) terminal A and PCM terminal 2AL • Insufficient compression • Engine malfunction • PCM malfunction

Diagnostic procedure

STEP	INSPECTION		ACTION
1	**VERIFY FREEZE FRAME DATA AND DIAGNOSTIC MONITORING TEST RESULTS HAVE BEEN RECORDED** • Have FREEZE FRAME DATA and DIAGNOSTIC MONITORING TEST RESULTS (HO2S related) been recorded?	Yes	Go to the next step.
		No	Record FREEZE FRAME DATA and DIAGNOSTIC MONITORING TEST RESULTS on repair order, then go to the next step.
2	**VERIFY RELATED REPAIR INFORMATION AVAILABILITY** • Check for related Service Bulletins and/or on-line repair information availability. • Is any related repair information available?	Yes	Perform repair or diagnosis according to the available repair information. • If the vehicle is not repaired, go to the next step.
		No	Go to the next step.
3	**VERIFY RELATED PENDING CODE OR STORED DTCs** **Note** • If fuel monitor DTC, DTC P0131, P0132, P0151 or P0152 is retrieved, ignore it until P0134 or P0154 is fixed. • Turn ignition switch to OFF, then ON (Engine off). • Verify pending code or stored DTCs using the WDS or equivalent. • Is other DTC present?	Yes	Go to appropriate DTC troubleshooting procedures. (See 01–02C–13 DTC TABLE [AJ].)
		No	Go to the next step.
4	**IDENTIFY TRIGGER DTC FOR FREEZE FRAME DATA** • Is DTC P0134 or P0154 on FREEZE FRAME DATA?	Yes	Go to the next step.
		No	Go to troubleshooting procedures for DTC on FREEZE FRAME DATA. (See 01–02C–13 DTC TABLE [AJ].)

STEP	INSPECTION		ACTION
5	**VERIFY CURRENT INPUT SIGNAL STATUS** • Warm up engine. • Access O2S11 for P0134 or O2S21 for P0154 PID using the WDS or equivalent. • Verify PID when racing engine (in PARK or NEUTRAL). • Is PID reading normal? — **0.55 V or more** when the accelerator pedal is suddenly depressed (rich condition). — **0.55 V or less** just after release of accelerator pedal (lean condition)	Yes	Go to step 8.
		No	Go to the next step.
6	**INSPECT INSTALLATION OF HO2S (RF, LF)** • Check if HO2S (RF, LF) is loosely installed. • Is HO2S (RF, LF) installed securely?	Yes	Go to the next step.
		No	Install HO2S (RF, LF) securely, then go to Step 10. (See 01–15C–2 EXHAUST SYSTEM REMOVAL/INSTALLATION [AJ].)
7	**INSPECT GAS LEAKAGE FROM EXHAUST SYSTEM** • Visually check if any gas leakage is found between exhaust manifold and HO2S (RF, LF). (See 01–15C–1 EXHAUST SYSTEM INSPECTION [AJ].) • Is there gas leakage?	Yes	Repair or replace any faulty exhaust parts, then go to Step 10. (See 01–15C–2 EXHAUST SYSTEM REMOVAL/INSTALLATION [AJ].)
		No	• Inspect the following harnesses for open or short to ground, repair or replace harness if necessary: — HO2S (RF) terminal A to PCM terminal 2AK — HO2S (LF) terminal A to PCM terminal 2AL • Repair or replace harness if necessary. • If all items above are normal, replace faulty sensor. Then go to Step 10.
8	**INSPECT SEALING OF ENGINE COOLANT PASSAGE** **Warning** • **Removing radiator cap when radiator is hot is dangerous. Scalding coolant and steam may shoot out and cause serious injury.** • **When removing radiator cap, wrap a thick cloth around and turn it slowly.** • Remove radiator cap. • Implement procedure to bleed air from engine coolant, then run engine at idle. • Are there any small bubbles, which make engine coolant white at filling opening? **Note** • Large bubbles are normal since they are remaining air coming out from engine coolant passage.	Yes	Air gets in from poor sealing on head gasket or other areas between combustion chamber and engine coolant passage. Repair or replace faulty parts, then go to Step 10.
		No	Go to the next step.
9	**INSPECT ENGINE COMPRESSION** • Inspect engine compression. (See 01–10C–6 COMPRESSION INSPECTION [AJ].) • Is it normal?	Yes	Go to the next step.
		No	Implement engine overhaul for repairs, then go to the next step.
10	**VERIFY TROUBLESHOOTING OF DTC P0134 or P0154 COMPLETED** • Make sure to reconnect all disconnected connectors. • Clear DTC from PCM memory using WDS or equivalent. • Perform the KOER SELF TEST using the WDS or equivalent. (See 01–02C–8 KOEO/KOER SELF TEST [AJ].) • Is the PENDING CODE same DTC present?	Yes	Replace PCM, then go to the next step. (See 01–40C–5 PCM REMOVAL/INSTALLATION [AJ].)
		No	Go to the next step.

STEP	INSPECTION		ACTION
11	**VERIFY AFTER REPAIR PROCEDURE** • Perform "AFTER REPAIR PROCEDURE". (See 01–02C–7 AFTER REPAIR PROCEDURE [AJ].) • Are any DTCs present?	Yes	Go to the applicable DTC inspection. (See 01–02C–13 DTC TABLE [AJ].)
		No	Troubleshooting completed.

DTC P0137, P0157 [AJ]

E6U010200000WC4

DTC P0137 DTC P0157	**HO2S (RR) circuit low input** **HO2S (LR) circuit low input**
DETECTION CONDITION	• The PCM monitors input voltage from rear HO2S. If the input voltage from the rear HO2S sensor is below **0.1 V** for **41.6 s** the PCM determines that circuit input is low. **MONITORING CONDITIONS** — HO2S, HO2S heater and TWC repair verification drive mode — Following conditions are met. • Engine speed is **above 1,500 rpm.** • Engine coolant temperature **above 70 °C {158 °F}.** • Fuel injector control in rear HO2S closed loop control • The PCM monitors the input voltage from the rear HO2S when the following conditions are met. Under the following monitoring conditions, if the input voltage from the rear HO2S does not even **exceed 0.1 V** though the short term fuel trim is controlled up to **25%** for **9.6 s**, the PCM determines that sensor circuit input is low. **MONITORING CONDITIONS** — HO2S, HO2S heater and TWC repair verification drive mode — Following conditions are met for **above 32 s** • Engine speed is **above 1,500 rpm.** • Engine coolant temperature is **above 70 °C {158 °F}.** **Diagnostic support note** • This is a continuous monitor (HO2S). • MIL illuminates if the PCM detects the above malfunctioning condition in two consecutive drive cycles or in one drive cycle while the DTC for the same malfunction has been stored in the PCM. • PENDING CODE is available if the PCM detects the above malfunction conditions during the first drive cycle. • FREEZE FRAME DATA is available. • DTC is stored in the PCM memory.
POSSIBLE CAUSE	• HO2S (RR) malfunction • Short to ground in wiring between HO2S (RR) terminal A and PCM terminal 2AG • Open circuit between HO2S (RR) terminal A and PCM terminal 2AG • Open circuit between HO2S (RR) terminal B and PCM terminal 2AY • HO2S (LR) malfunction • Short to ground in wiring between HO2S (LR) terminal A and PCM terminal 2AH • Open circuit between HO2S (LR) terminal A and PCM terminal 2AH • Open circuit between HO2S (LR) terminal B and PCM terminal 2BA • PCM malfunction

DTC P0137	HO2S (RR) circuit low input
DTC P0157	HO2S (LR) circuit low input

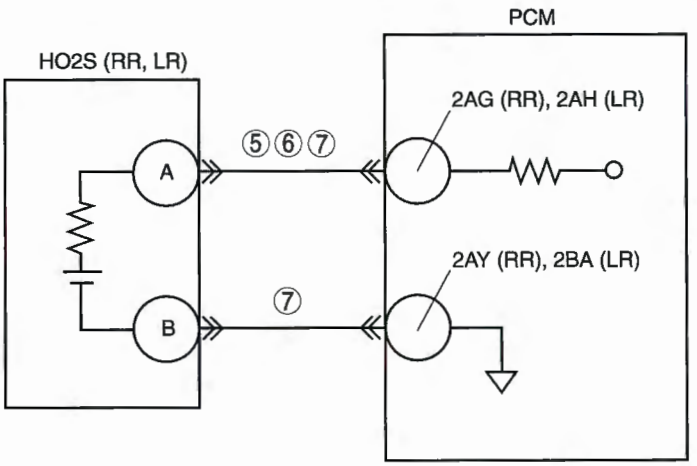

HO2S (RR)
HARNESS SIDE CONNECTOR

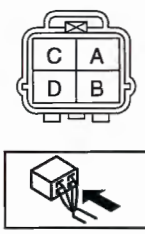

HO2S (LR)
HARNESS SIDE CONNECTOR

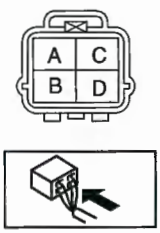

PCM
WIRING HARNESS-SIDE CONNECTOR

2BE	2BA	2AW	2AS	2AO	2AK	2AG	2AC	2Y	2U	2Q	2M	2I	2E	2A
2BF	2BB	2AX	2AT	2AP	2AL	2AH	2AD	2Z	2V	2R	2N	2J	2F	2B
2BG	2BC	2AY	2AU	2AQ	2AM	2AI	2AE	2AA	2W	2S	2O	2K	2G	2C
2BH	2BD	2AZ	2AV	2AR	2AN	2AJ	2AF	2AB	2X	2T	2P	2L	2H	2D

1BE	1BA	1AW	1AS	1AO	1AK	1AG	1AC	1Y	1U	1Q	1M	1I	1E	1A
1BF	1BB	1AX	1AT	1AP	1AL	1AH	1AD	1Z	1V	1R	1N	1J	1F	1B
1BG	1BC	1AY	1AU	1AQ	1AM	1AI	1AE	1AA	1W	1S	1O	1K	1G	1C
1BH	1BD	1AZ	1AV	1AR	1AN	1AJ	1AF	1AB	1X	1T	1P	1L	1H	1D

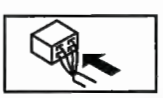

Diagnostic procedure

STEP	INSPECTION		ACTION
1	**VERIFY FREEZE FRAME DATA AND DIAGNOSTIC MONITORING TEST RESULTS HAVE BEEN RECORDED** • Have FREEZE FRAME DATA and DIAGNOSTIC MONITORING TEST RESULTS (HO2S related) been recorded?	Yes	Go to the next step.
		No	Record the FREEZE FRAME DATA and DIAGNOSTIC MONITORING TEST RESULTS on the repair order, then go to next step.
2	**VERIFY RELATED REPAIR INFORMATION AVAILABILITY** • Verify related Service Bulletins and/or on-line repair information availability. • Is any related repair information available?	Yes	Perform repair or diagnosis according to the available repair information. If the vehicle is not repaired, go to next step.
		No	Go to the next step.
3	**VERIFY RELATED PENDING OR STORED DTCs** • Turn the ignition switch off, then ON position (Engine off). • Verify the related PENDING CODE or stored DTCs using WDS or equivalent. • Is other DTC present?	Yes	Go to appropriate DTC troubleshooting procedure. (See 01–02C–13 DTC TABLE [AJ].)
		No	Go to the next step.
4	**IDENTIFY TRIGGER DTC FOR FREEZE FRAME DATA** • Is DTC P0137 or P0157 on FREEZE FRAME DATA?	Yes	Go to the next step.
		No	Go to troubleshooting for DTC on FREEZE FRAME DATA. (See 01–02C–13 DTC TABLE [AJ].)
5	**INSPECT REAR HO2S SIGNAL CIRCUIT FOR SHORT TO GROUND AT HARNESS** • Turn the ignition switch off. • Disconnect rear HO2S and PCM connectors. • Verify the continuity between following HO2S sensor terminal A (wiring harness side) and body ground. • Is there continuity?	Yes	Replace short to ground circuit, then go to Step 8.
		No	Go to the next step.
6	**INSPECT REAR HO2S SIGNAL CIRCUIT FOR SHORT TO GROUND AT FRONT HO2S** • Rear HO2S connector disconnected. • Verify the continuity between following HO2S sensor terminal A (part side) and body ground. • Is there continuity?	Yes	Replace suspected HO2S then go to the next step.
		No	Go to the next step.
7	**INSPECT REAR HO2S CIRCUIT FOR OPEN CIRCUIT** • Turn the ignition switch off. • Check continuity between the following circuits: — HO2S terminal A and PCM terminal 2AG (RR), 2AH (LR) — HO2S terminal B and PCM terminal 2AY (RR), 2BA (LR) • Is there continuity?	Yes	Repair or replace harness for open circuit, then go to the next step.
		No	Go to the next step.
8	**VERIFY TROUBLESHOOTING OF DTC P0137 OR P0157 COMPLETED** • Make sure to reconnect all disconnected connectors. • Clear DTC from PCM memory using WDS or equivalent. • Perform the KOEO or KOER SELF TEST using the WDS or equivalent. (See 01–02C–8 KOEO/KOER SELF TEST [AJ].) • Is the PENDING CODE same DTC present?	Yes	Replace PCM, then go to next step. (See 01–40C–5 PCM REMOVAL/INSTALLATION [AJ].)
		No	Go to the next step.
9	**VERIFY AFTER REPAIR PROCEDURE** • Perform "After Repair Procedure". (See 01–02C–7 AFTER REPAIR PROCEDURE [AJ].) • Is there any DTC present?	Yes	Go to applicable DTC inspection. (See 01–02C–13 DTC TABLE [AJ].)
		No	Troubleshooting completed.

DTC P0138, P0158 [AJ]

E6U010200000W43

DTC P0138 DTC P0158	HO2S (RR) circuit high input HO2S (LR) circuit high input
DETECTION CONDITION	• The PCM monitors input voltage from front HO2S (RR, LR). If the PCM detected HO2S (RR, LR) voltage **above 1.2 V** for **0.8 s**, the PCM determines that the circuit input is high. **Diagnostic support note** • This is a continuous monitor (HO2S). • MIL illuminates if the PCM detects the above malfunction condition in two consecutive drive cycles or in one drive cycle while the DTC for the same malfunction has been stored in the PCM. • PENDING CODE is available if the PCM detects the above malfunction condition during the first drive cycle. • FREEZE FRAME DATA is available. • DTC is stored in the PCM memory.
POSSIBLE CAUSE	• HO2S (RR, LR) malfunction • Short to power supply in the wiring harness between the following terminals: — For P0138: HO2S (RR) terminal A and PCM terminal 2AG — For P0158: HO2S (LR) terminal A and PCM terminal 2AH • HO2S (RR, LR) or PCM terminal is shorted • PCM malfunction

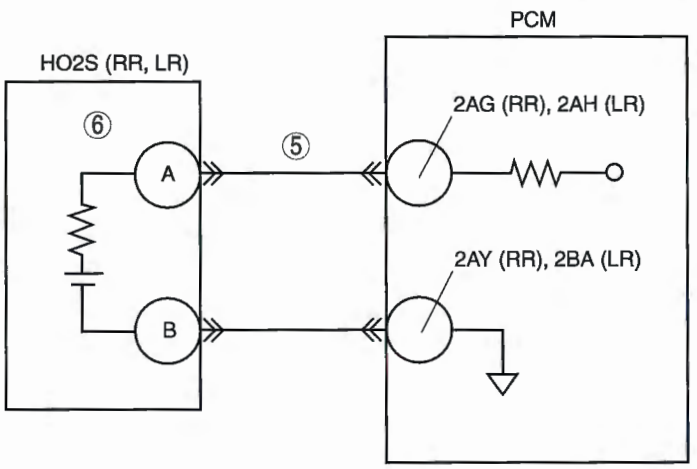

HO2S (RR)
HARNESS SIDE CONNECTOR

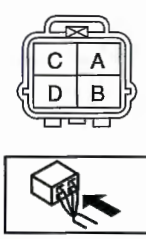

HO2S (LR)
HARNESS SIDE CONNECTOR

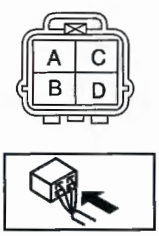

PCM
WIRING HARNESS-SIDE CONNECTOR

2BE	2BA	2AW	2AS	2AO	2AK	2AG	2AC	2Y	2U	2Q	2M	2I	2E	2A
2BF	2BB	2AX	2AT	2AP	2AL	2AH	2AD	2Z	2V	2R	2N	2J	2F	2B
2BG	2BC	2AY	2AU	2AQ	2AM	2AI	2AE	2AA	2W	2S	2O	2K	2G	2C
2BH	2BD	2AZ	2AV	2AR	2AN	2AJ	2AF	2AB	2X	2T	2P	2L	2H	2D

1BE	1BA	1AW	1AS	1AO	1AK	1AG	1AC	1Y	1U	1Q	1M	1I	1E	1A
1BF	1BB	1AX	1AT	1AP	1AL	1AH	1AD	1Z	1V	1R	1N	1J	1F	1B
1BG	1BC	1AY	1AU	1AQ	1AM	1AI	1AE	1AA	1W	1S	1O	1K	1G	1C
1BH	1BD	1AZ	1AV	1AR	1AN	1AJ	1AF	1AB	1X	1T	1P	1L	1H	1D

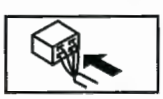

Diagnostic procedure

STEP	INSPECTION		ACTION
1	**VERIFY FREEZE FRAME DATA AND DIAGNOSTIC MONITORING TEST RESULTS HAVE BEEN RECORDED** • Have FREEZE FRAME DATA and DIAGNOSTIC MONITORING TEST RESULTS (HO2S related) been recorded?	Yes	Go to the next step.
		No	Record FREEZE FRAME DATA and DIAGNOSTIC MONITORING TEST RESULTS on repair order, then go to the next step.
2	**VERIFY RELATED REPAIR INFORMATION AVAILABILITY** • Check for related Service Bulletins and/or on-line repair information availability. • Is any related repair information available?	Yes	Perform the repair or diagnosis according to the available repair information. • If the vehicle is not repaired, go to the next step.
		No	Go to the next step.
3	**VERIFY RELATED PENDING OR STORED DTCS** • Turn the ignition switch off, then ON (Engine off). • Verify pending code or stored DTCs using the WDS or equivalent. • Are other DTCs present?	Yes	Go to the appropriate DTC troubleshooting procedures. (See 01–02C–13 DTC TABLE [AJ].)
		No	Go to the next step.
4	**IDENTIFY TRIGGER DTC FOR FREEZE FRAME DATA** • Is DTC P0138 or P0158 on FREEZE FRAME DATA?	Yes	Go to the next step.
		No	Go to the troubleshooting procedures for the DTC in the FREEZE FRAME DATA. (See 01–02C–13 DTC TABLE [AJ].)
5	**INSPECT HO2S (RR, LR) SIGNAL CIRCUIT FOR SHORT TO POWER SUPPLY** • Turn the ignition switch off. • Disconnect the HO2S (RR, LR) connector. • Turn the ignition switch to the to ON position (Engine off). • Measure the voltage between the following terminals. — For P0138: HO2S (RR) terminal A and body ground — For P0158: HO2S (LR) terminal A and body ground • Is there any voltage?	Yes	Replace short to power supply, then go to Step 7.
		No	Go to the next step.
6	**INSPECT HO2S (RR, LR)** • Perform the "HEATED OXYGEN SENSOR (HO2S) INSPECTION". (See 01–40C–33 HEATED OXYGEN SENSOR (HO2S) INSPECTION [AJ].) • Is the front HO2S normal?	Yes	Go to the next step.
		No	Replace the sensor, then go to the next step.
7	**VERIFY TROUBLESHOOTING OF DTC P0138 OR P0158 COMPLETED** • Make sure to reconnect all disconnected connectors. • Clear DTC from PCM memory using WDS or equivalent. • Perform the KOEO or KOER SELF TEST using the WDS or equivalent. (See 01–02C–8 KOEO/KOER SELF TEST [AJ].) • Is the PENDING CODE same DTC present?	Yes	Replace the PCM, then go to the next step. (See 01–40C–5 PCM REMOVAL/INSTALLATION [AJ].)
		No	Go to the next step.
8	**VERIFY AFTER REPAIR PROCEDURE** • Perform the "After Repair Procedure". (See 01–02C–7 AFTER REPAIR PROCEDURE [AJ].) • Are any DTCs present?	Yes	Go to the applicable DTC inspection. (See 01–02C–13 DTC TABLE [AJ].)
		No	Troubleshooting completed.

DTC P0139, P0159 [AJ]

E6U010200000W44

DTC P0139 DTC P0159	HO2S (RR) circuit problem HO2S (LR) circuit problem
DETECTION CONDITION	• The PCM monitors the rich **(0.4 V)** to lean **(0.3 V)** response time of the HO2S (RR, LR). The PCM measure the response time when the following conditions are met, The PCM determines the HO2S (RR, LR) response deterioration malfunction when the measured response time is more than the threshold value **(180 ms)** five consecutive times. **MONITORING CONDITIONS** — Drive mode 3 — The following conditions are met: • Fuel cut during deceleration. • Engine speed is **above 500 rpm**. • Engine coolant temperature is **above 70 °C {158 °F}**. • HO2S (RR, LR) output voltage is **above 0.4 V**. • The PCM monitors for a time-out malfunction (when HO2S (RR, LR) remains **above 0.3 V** for longer than a specified period of time during fuel cut control). The PCM measures the amount of time from when the following conditions are met until the HO2S (RR, LR) output voltage drops **below 0.3 V**. The PCM determines a HO2S time-out malfunction when the detected time is more than the threshold value **(6 s)** three consecutive times. **MONITORING CONDITIONS** — Drive mode 3 — The following conditions are met: • Fuel cut during deceleration. • Engine speed is **above 500 rpm**. • Engine coolant temperature is **above 70 °C {158 °F}**. • HO2S (RR, LR) is activated **(more than 0.55 V)**. **Diagnostic support note** • This is an intermittent monitor. (HO2S) • The MIL illuminates if the PCM detects the above malfunction condition in two consecutive drive cycles or in one drive cycle while the DTC for the same malfunction has been stored in the PCM. • PENDING CODE is available if the PCM detects the above malfunction condition during the first drive cycle. • FREEZE FRAME DATA is available. • The DTC is stored in the PCM memory. • DIAGNOSTIC MONITORING TEST RESULT is available.
POSSIBLE CAUSE	• HO2S (LR, RR) deterioration • HO2S (LR, RR) malfunction • Loose HO2S (LR, RR) • Pressure regulator (built-in fuel pump unit) malfunction • Fuel pump malfunction • Fuel filter (built-in fuel pump unit) clogged or restricted • Fuel leakage on fuel line from fuel distributor and fuel pump • Purge solenoid valve malfunction • Improper connection of purge solenoid hoses • Insufficient compression • Engine malfunction (Engine coolant leakage)

Diagnostic procedure

STEP	INSPECTION		ACTION
1	**VERIFY FREEZE FRAME DATA AND DIAGNOSTIC MONITORING TEST RESULTS HAVE BEEN RECORDED** • Have FREEZE FRAME DATA and DIAGNOSTIC MONITORING TEST RESULTS (HO2S related) been recorded?	Yes	Go to the next step.
		No	Record FREEZE FRAME DATA and DIAGNOSTIC MONITORING TEST RESULTS on repair order, then go to the next step.
2	**VERIFY RELATED SERVICE INFORMATION AVAILABILITY** • Verify related Service Information availability. • Is any related Service Information available?	Yes	Perform the repair or diagnosis according to the available Service Information. • If the vehicle is not repaired, go to the next step.
		No	Go to the next step.
3	**VERIFY RELATED PENDING AND STORED DTC** • Turn the ignition switch off, then ON (Engine off). • Verify pending and /or stored DTCs using the WDS or equivalent. • Is DTC P0443 also present?	Yes	Go to the DTC P0443 troubleshooting procedures, then go to Step 11.
		No	Go to the next step.

STEP	INSPECTION		ACTION
4	**IDENTIFY TRIGGER DTC FOR FREEZE FRAME DATA** • Is DTC P0139 or P0159 on FREEZE FRAME DATA?	Yes	Go to the next step.
		No	Go to the troubleshooting procedures for the DTC in the FREEZE FRAME DATA. (See 01–02C–13 DTC TABLE [AJ].)
5	**VERIFY CURRENT INPUT SIGNAL STATUS** • Warm up the engine. • Access O2S12 (with DTC P0139) or O2S22 (with DTC P0159) PID using the WDS or equivalent. • Inspect the PID under the following accelerator pedal conditions in PARK (ATX) or NEUTRAL (MTX). • Is the PID normal? — **More than 0.55 V** when accelerator pedal is suddenly depressed (rich condition). — **Less than 0.55 V** just after release of the accelerator pedal (lean condition).	Yes	Go to step 7.
		No	Go to the next step.
6	**INSPECT INSTALLATION OF REAR HO2S** • Inspect for loose the HO2S (LR, RR) installation. • Is the sensor installed securely?	Yes	Inspect the HO2S (LR with DTC P0139 or RR with DTC P0159). • If normal, go to step 11 • If there is a malfunction, replace suddenly depress HO2S, then go to Step 11
		No	Retighten the sensor, then go to Step 11.
7	**INSPECT LONG TERM FUEL TRIM** • Access the LONGFT1 (with DTC P0139) or LONGFT2 (with DTC P0159) PID • Compare it with the FREEZE FRAME DATA recorded in Step 1. • Is it below the FFD value?	Yes	Engine is driven under a rich condition. Go to the next step.
		No	Engine is driven under a lean condition. Go to step 9.
8	**INSPECT FUEL LINE PRESSURE (Excessive fuel line pressure)** • Turn the ignition switch off. • Inspect fuel line pressure while the engine is running. (See 01–14A–7 FUEL LINE PRESSURE INSPECTION [L3, AJ].) • Is the fuel line pressure normal?	Yes	Go to step 10.
		No	Inspect the fuel pump maximum pressure and the fuel return pipe for clogging. (See 01–14A–21 FUEL PUMP UNIT INSPECTION [L3, AJ].) • If there is any problem, repair or replace the parts. • If all items above are normal, replace the fuel pump unit. Then go to Step 11.
9	**INSPECT FUEL LINE PRESSURE (Low fuel line pressure)** • Turn the ignition switch off. • Inspect the fuel line pressure while the engine is running. (See 01–14A–7 FUEL LINE PRESSURE INSPECTION [L3, AJ].) • Is the fuel line pressure normal?	Yes	Go to step 10.
		No	Inspect the fuel filters for the following: • Foreign material or staining inside the fuel filter (low-pressure side) Perform the following actions according to the result. • If foreign material or staining is found inside the fuel filter (low-pressure side), clean the fuel tank and filter. • If normal, replace fuel pump unit. Then go to Step 11.
10	**INSPECT SEALING OF ENGINE COOLANT PASSAGE** • Perform "ENGINE COOLANT LEAKAGE INSPECTION." (See 01–12A–7 ENGINE COOLANT LEAKAGE INSPECTION [L3, AJ].) • Is there any malfunction?	Yes	Go to the next step.
		No	Repair or replace the malfunctioning part according to inspection results. Then go to the next step.
11	**VERIFY TROUBLESHOOTING OF DTC P0139 OR P0159 COMPLETED** • Make sure to reconnect all disconnected connectors. • Turn the ignition switch to the ON position. (Engine off) • Clear the DTC from the memory using the WDS or equivalent. • Run Drive Mode 1 and 3 (See 01–02C–8 OBD-II DRIVE MODE [AJ].) • Is the PENDING CODE for this DTC present?	Yes	Replace the PCM, then go to the next step. (See 01–40C–5 PCM REMOVAL/INSTALLATION [AJ].)
		No	Go to the next step.

STEP	INSPECTION		ACTION
12	**VERIFY AFTER REPAIR PROCEDURE** • Perform the "AFTER REPAIR PROCEDURE". (See 01–02C–7 AFTER REPAIR PROCEDURE [AJ].) • Are any DTCs present?	Yes	Go to the applicable DTC troubleshooting. (See 01–02C–13 DTC TABLE [AJ].)
		No	Troubleshooting completed.

DTC P0140, P0160 [AJ]

E6U010200000W45

DTC P0140 **DTC P0160**	**HO2S (RR) circuit no activity detected** **HO2S (LR) circuit no activity detected**
DETECTION CONDITION	• The PCM monitors the input voltage from the HO2S (RR, LR) when the following monitoring conditions are met. If the input voltage never **exceeds 0.55 V** through the short fuel trim is controlled up to **25%** for **9.6 s**, the PCM determines that the sensor circuit is not activated. **MONITORING CONDITIONS** — Drive mode 3 — The following conditions are to be met tor **32 s**: • The engine speed is **1,500 rpm or above**. • The engine coolant temperature is **70 °C {158 °F} or above**. — HO2S (RR, LR) voltage is **above 0.1 V** **Diagnostic support note** • This is an intermittent monitor (HO2S). • MIL illuminates if the PCM detects the above malfunction condition in two consecutive drive cycles or in one drive cycle while the DTC for the same malfunction has been stored in the PCM. • PENDING CODE is available if the PCM detects the above malfunction condition during the first drive cycle. • FREEZE FRAME DATA is available. • DTC is stored in the PCM memory.
POSSIBLE CAUSE	• HO2S (RR, LR) deterioration • HO2S heater (RR, LR) malfunction • Leakage exhaust system • Open or short circuit to ground circuit between HO2S (RR, LR) terminal and PCM terminal — For P0140: HO2S (RR) terminal A and PCM terminal 2AG — For P0160: HO2S (LR) terminal A and PCM terminal 2AH • Insufficient compression • Engine malfunction • PCM malfunction

Diagnostic procedure

STEP	INSPECTION		ACTION
1	**VERIFY FREEZE FRAME DATA AND DIAGNOSTIC MONITORING TEST RESULTS HAVE BEEN RECORDED** • Have FREEZE FRAME DATA and DIAGNOSTIC MONITORING TEST RESULTS (HO2S related) been recorded?	Yes	Go to the next step.
		No	Record FREEZE FRAME DATA and DIAGNOSTIC MONITORING TEST RESULTS on repair order, then go to the next step.
2	**VERIFY RELATED REPAIR INFORMATION AVAILABILITY** • Check for related Service Bulletins and/or on-line repair information availability. • Is any related repair information available?	Yes	Perform repair or diagnosis according to the available repair information. • If the vehicle is not repaired, go to the next step.
		No	Go to the next step.
3	**VERIFY RELATED PENDING CODE OR STORED DTCs** **Note** • If fuel monitor DTC, DTC P0131, P0132, P0151 or P0152 is retrieved, ignore it until P0140 or P0160 is fixed. • Turn ignition switch to OFF, then ON (Engine off). • Verify pending code or stored DTCs using the WDS or equivalent. • Is other DTC present?	Yes	Go to appropriate DTC troubleshooting procedures. (See 01–02C–13 DTC TABLE [AJ].)
		No	Go to the next step.

STEP	INSPECTION		ACTION
4	**IDENTIFY TRIGGER DTC FOR FREEZE FRAME DATA** • Is DTC P0140 or P0160 on FREEZE FRAME DATA?	Yes	Go to the next step.
		No	Go to troubleshooting procedures for DTC on FREEZE FRAME DATA. (See 01–02C–13 DTC TABLE [AJ].)
5	**VERIFY CURRENT INPUT SIGNAL STATUS** • Warm up engine. • Access O2S12 for P0140 or O2S22 for P0160 PID using the WDS or equivalent. • Verify PID when racing engine at least **10 times** (in PARK or NEUTRAL). • Is PID reading normal? — **0.55 V or more** at least once during engine racing.	Yes	Go to step 8.
		No	Go to the next step.
6	**INSPECT INSTALLATION OF HO2S (RR, LR)** • Check if HO2S (RR, LR) is loosely installed. • Is sensor installed securely?	Yes	Go to the next step.
		No	Install HO2S (RR, LR) securely, then go to Step 10. (See 01–15C–2 EXHAUST SYSTEM REMOVAL/ INSTALLATION [AJ].)
7	**INSPECT GAS LEAKAGE FROM EXHAUST SYSTEM** • Visually check if any gas leakage is found between exhaust pipe and HO2S (RR, LR). (See 01–15C–1 EXHAUST SYSTEM INSPECTION [AJ].) • Is there gas leakage?	Yes	Repair or replace any faulty exhaust parts, then go to Step 10. (See 01–15C–2 EXHAUST SYSTEM REMOVAL/ INSTALLATION [AJ].)
		No	• Inspect the following harnesses for open or short circuit to ground circuit, repair or replace harness if necessary. — HO2S (RR) terminal A to PCM terminal 2AG — HO2S (LR) terminal A to PCM terminal 2AH • Repair or replace harness if necessary. • If all items above are normal, replace faulty sensor. Then go to Step 10.
8	**INSPECT SEALING OF ENGINE COOLANT PASSAGE** **Warning** • **Removing radiator cap when radiator is hot is dangerous. Scalding coolant and steam may shoot out and cause serious injury.** • **When removing radiator cap, wrap a thick cloth around and turn it slowly.** • Remove radiator cap. • Implement procedure to bleed air from engine coolant, then run engine at idle. • Are there any small bubbles, which make engine coolant white at filling opening? **Note** • Large bubbles are normal since they are remaining air coming out from engine coolant passage.	Yes	Air gets in from poor sealing of head gasket or other areas between combustion chamber and engine coolant passage. Repair or replace faulty parts, then go to Step 10.
		No	Go to the next step.
9	**INSPECT ENGINE COMPRESSION** • Inspect engine compression. (See 01–10C–6 COMPRESSION INSPECTION [AJ].) • Is it normal?	Yes	Go to the next step.
		No	Implement engine overhaul for repairs, then go to the next step.
10	**VERIFY TROUBLESHOOTING OF DTC P0140 or P0160 COMPLETED** • Make sure to reconnect all disconnected connectors. • Clear DTC from PCM memory using WDS or equivalent. • Perform the KOER SELF TEST using the WDS or equivalent. (See 01–02C–8 KOEO/KOER SELF TEST [AJ].) • Is the PENDING CODE same DTC present?	Yes	Replace PCM, then go to the next step. (See 01–40C–5 PCM REMOVAL/INSTALLATION [AJ].)
		No	Go to the next step.

STEP	INSPECTION		ACTION
11	**VERIFY AFTER REPAIR PROCEDURE** • Perform "AFTER REPAIR PROCEDURE". (See 01–02C–7 AFTER REPAIR PROCEDURE [AJ].) • Are any DTCs present?	Yes	Go to the applicable DTC inspection. (See 01–02C–13 DTC TABLE [AJ].)
		No	Troubleshooting completed.

DTC P0222 [AJ]

E6U010200000W46

DTC P0222	TP sensor No.2 circuit low input
DETECTION CONDITION	• If the PCM detects that TP sensor No.2 voltage at PCM terminal 2AI is **0.1 V or below** after the ignition switch is ON, the PCM determines that the TP circuit has a malfunction. **Diagnostic support note** • This is a continuous monitor (CCM). • MIL illuminates if the PCM detects the above malfunction condition during the first drive cycle. • FREEZE FRAME DATA is available. • DTC is stored in the PCM memory.
POSSIBLE CAUSE	• TP sensor No.2 malfunction • Connector or terminal malfunction • Open circuit between throttle body terminal D and PCM terminal 2AR • Short to ground circuit between throttle body terminal C and PCM terminal 2AI • PCM malfunction

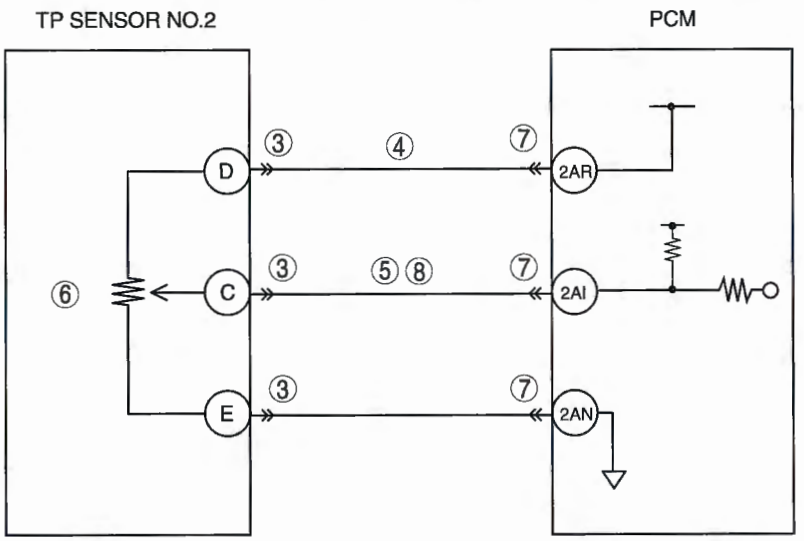

THROTTLE BODY
HARNESS SIDE CONNECTOR

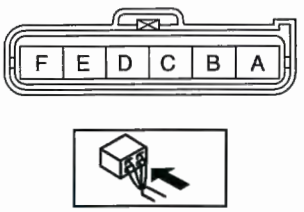

PCM
WIRING HARNESS-SIDE CONNECTOR

2BE	2BA	2AW	2AS	2AO	2AK	2AG	2AC	2Y	2U	2Q	2M	2I	2E	2A
2BF	2BB	2AX	2AT	2AP	2AL	2AH	2AD	2Z	2V	2R	2N	2J	2F	2B
2BG	2BC	2AY	2AU	2AQ	2AM	2AI	2AE	2AA	2W	2S	2O	2K	2G	2C
2BH	2BD	2AZ	2AV	2AR	2AN	2AJ	2AF	2AB	2X	2T	2P	2L	2H	2D

Diagnostic procedure

STEP	INSPECTION		ACTION
1	**VERIFY FREEZE FRAME DATA HAS BEEN RECORDED** • Has FREEZE FRAME DATA been recorded?	Yes	Go to the next step.
		No	Record FREEZE FRAME DATA on repair order, then go to the next step.

STEP	INSPECTION		ACTION
2	**VERIFY RELATED REPAIR INFORMATION AVAILABILITY** • Check for related Service Bulletins and/or on-line repair information availability. • Is any related repair information available?	Yes	Perform repair or diagnosis according to the available repair information. • If the vehicle is not repaired, go to the next step.
		No	Go to the next step.
3	**INSPECT THROTTLE BODY CONNECTOR FOR POOR CONNECTION** • Turn the ignition switch off. • Disconnect throttle body connector. • Check for poor connection (such as damaged, pulled-out pins, and corrosion). • Is there any malfunction?	Yes	Repair or replace the terminal, then go to Step 9.
		No	Go to the next step.
4	**INSPECT TP SENSOR NO.2 POWER CIRCUIT FOR OPEN CIRCUIT** **Note** • If DTC P0122 is also retrieved with P0222, then go to CONSTANT VOLTAGE troubleshooting procedure. • Turn the ignition switch to the ON position. • Measure voltage between throttle body terminal D and body ground. • Is voltage **within 4.5—5.5 V**?	Yes	Go to the next step.
		No	Repair or replace harness for open circuit, then go to Step 9.
5	**VERIFY TP SENSOR NO.2 SIGNAL CIRCUIT FOR SHORT TO GROUND** • Turn the ignition switch off. • Check continuity between throttle body terminal C and body ground. • Is there continuity?	Yes	Repair or replace harness, then go to Step 9.
		No	Go to the next step.
6	**INSPECT TP SENSOR NO.2** • Inspect TP sensor No.2. (See 01–40C–28 THROTTLE POSITION (TP) SENSOR INSPECTION [AJ].) • Is there any malfunction?	Yes	Replace throttle body, then go to Step 9. (See 01–13C–2 INTAKE AIR SYSTEM REMOVAL/INSTALLATION [AJ].)
		No	Go to the next step.
7	**INSPECT PCM CONNECTOR FOR POOR CONNECTION** • Turn the ignition switch off. • Disconnect PCM connector. • Check for poor connection (such as damaged, pulled-out pins, and corrosion, etc.). • Is there any malfunction?	Yes	Repair or replace the terminal, then go to Step 9.
		No	Go to the next step.
8	**VERIFY TP SENSOR NO.2 SIGNAL CIRCUIT FOR OPEN CIRCUIT** • Turn the ignition switch off. • Check continuity between throttle body terminal C and PCM terminal 2AI. • Is there continuity?	Yes	Go to the next step.
		No	Repair or replace harness for open circuit, then go to the next step.
9	**VERIFY TROUBLESHOOTING OF DTC P0222 COMPLETED** • Make sure to reconnect all disconnected connectors. • Clear DTC from PCM memory using WDS or equivalent. • Perform the KOEO or KOER SELF TEST using the WDS or equivalent. (See 01–02C–8 KOEO/KOER SELF TEST [AJ].) • Is the PENDING CODE same DTC present?	Yes	Replace PCM, then go to the next step. (See 01–40C–5 PCM REMOVAL/INSTALLATION [AJ].)
		No	Go to the next step.
10	**VERIFY AFTER REPAIR PROCEDURE** • Perform "AFTER REPAIR PROCEDURE". (See 01–02C–7 AFTER REPAIR PROCEDURE [AJ].) • Are any DTCs present?	Yes	Go to the applicable DTC inspection. (See 01–02C–13 DTC TABLE [AJ].)
		No	Troubleshooting completed.

DTC P0223 [AJ]

E6U010200000W47

DTC P0223	TP sensor No.2 circuit high input
DETECTION CONDITION	• If the PCM detects that TP sensor No.2 voltage at PCM terminal 2AI is **4.9 V or above** after the ignition switch is ON, the PCM determines that the TP circuit has a malfunction. **Diagnostic support note** • This is a continuous monitor (CCM). • MIL illuminates if the PCM detects the above malfunction condition during the first drive cycle. • FREEZE FRAME DATA is available. • DTC is stored in the PCM memory.
POSSIBLE CAUSE	• TP sensor No.2 malfunction • Connector or terminal malfunction • Short to power circuit between throttle body terminal C and PCM terminal 2AI • Open circuit between throttle body terminal E and PCM terminal 2AN • Open circuit between throttle body terminal C and PCM terminal 2AI • PCM malfunction

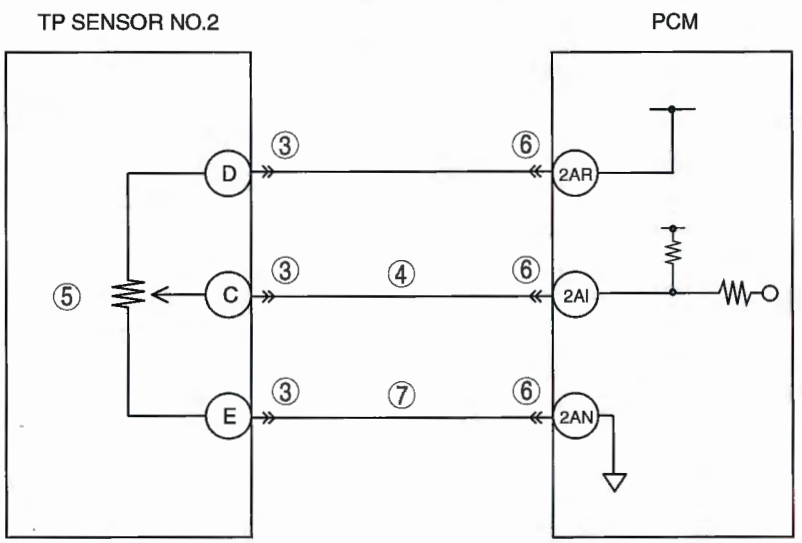

THROTTLE BODY
HARNESS SIDE CONNECTOR

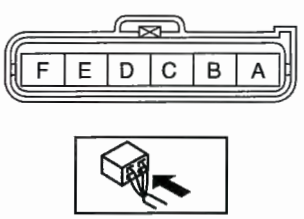

PCM
WIRING HARNESS-SIDE CONNECTOR

2BE	2BA	2AW	2AS	2AO	2AK	2AG	2AC	2Y	2U	2Q	2M	2I	2E	2A
2BF	2BB	2AX	2AT	2AP	2AL	2AH	2AD	2Z	2V	2R	2N	2J	2F	2B
2BG	2BC	2AY	2AU	2AQ	2AM	2AI	2AE	2AA	2W	2S	2O	2K	2G	2C
2BH	2BD	2AZ	2AV	2AR	2AN	2AJ	2AF	2AB	2X	2T	2P	2L	2H	2D

Diagnostic procedure

STEP	INSPECTION		ACTION
1	**VERIFY FREEZE FRAME DATA HAS BEEN RECORDED** • Has FREEZE FRAME DATA been recorded?	Yes	Go to the next step.
		No	Record FREEZE FRAME DATA on repair order, then go to the next step.
2	**VERIFY RELATED REPAIR INFORMATION AVAILABILITY** • Check for related Service Bulletins and/or on-line repair information availability. • Is any related repair information available?	Yes	Perform repair or diagnosis according to the available repair information. • If the vehicle is not repaired, go to the next step.
		No	Go to the next step.
3	**INSPECT THROTTLE BODY CONNECTOR FOR POOR CONNECTION** • Turn the ignition switch off. • Disconnect throttle body connector. • Check for poor connection (such as damaged, pulled-out pins, and corrosion). • Is there any malfunction?	Yes	Repair or replace the terminal, then go to Step 8.
		No	Go to the next step.
4	**INSPECT TP SENSOR NO.2 SIGNAL CIRCUIT FOR SHORT TO POWER** • Turn the ignition switch to the ON position. • Measure voltage between throttle body terminal C and body ground. • Is voltage **B+**?	Yes	Repair or replace harness for short to power, then go to Step 8.
		No	Go to the next step.
5	**INSPECT TP SENSOR NO.2** • Inspect TP sensor No.2. (See 01–40C–28 THROTTLE POSITION (TP) SENSOR INSPECTION [AJ].) • Is there any malfunction?	Yes	Replace throttle body, then go to Step 8. (See 01–13C–2 INTAKE AIR SYSTEM REMOVAL/ INSTALLATION [AJ].)
		No	Go to the next step.
6	**INSPECT PCM CONNECTOR FOR POOR CONNECTION** • Turn the ignition switch off. • Disconnect PCM connector. • Check for poor connection (such as damaged, pulled-out pins, and corrosion). • Is there any malfunction?	Yes	Repair or replace the terminal, then go to Step 8.
		No	Go to the next step.
7	**INSPECT TP SENSOR NO.2 GROUND CIRCUIT FOR OPEN CIRCUIT** • Turn the ignition switch off. • Check for continuity between throttle body terminal E and PCM terminal 2AN. • Is there continuity?	Yes	Go to the next step.
		No	Repair or replace harness for open circuit, then go to the next step.
8	**VERIFY TROUBLESHOOTING OF DTC P0223 COMPLETED** • Make sure to reconnect all disconnected connectors. • Clear DTC from PCM memory using WDS or equivalent. • Perform the KOEO or KOER SELF TEST using the WDS or equivalent. (See 01–02C–8 KOEO/KOER SELF TEST [AJ].) • Is the PENDING CODE same DTC present?	Yes	Replace PCM, then go to the next step. (See 01–40C–5 PCM REMOVAL/INSTALLATION [AJ].)
		No	Go to the next step.
9	**VERIFY AFTER REPAIR PROCEDURE** • Perform "AFTER REPAIR PROCEDURE". (See 01–02C–7 AFTER REPAIR PROCEDURE [AJ].) • Are any DTCs present?	Yes	Go to the applicable DTC inspection. (See 01–02C–13 DTC TABLE [AJ].)
		No	Troubleshooting completed.

DTC P0300 [AJ]

E6U010200000W48

DTC P0300	Random misfire detected
DETECTION CONDITION	• The PCM monitors the CKP sensor input signal interval time. The PCM calculates the change of the interval time for each cylinder. If the change of interval time exceeds the pre programmed criteria, the PCM detects a misfire in the corresponding cylinder. when the engine is running, the PCM counts the number of misfires that occurred at **200 crankshaft revolutions** and **1,000 crankshaft revolutions** and calculates the misfire ratio for each crankshaft revolution. If the ratio exceeds the pre programmed criteria, the PCM determines that a misfire, which can damage the catalytic converter or affect emission performance, has occurred. **Diagnostic support note** • This is a continuous monitor (Misfire). • MIL illuminates if the PCM detects the misfire which affects emission performance in two consecutive drive cycles or in one drive cycle while DTC for the same malfunction has been stored in the PCM. • MIL flashes if the PCM detects the misfire which can damage the catalytic converter during first drive cycle. • PENDING CODE is available if the PCM detects the misfire which affects emission performance during the first drive cycle. • FREEZE FRAME DATA is available. • DTC is stored in the PCM memory.
POSSIBLE CAUSE	• CMP sensor malfunction • CKP sensor malfunction • Ignition coil malfunction • Ignition system malfunction • MAF sensor contamination • Excess air suction in intake air system (between MAF/IAT sensor and dynamic chamber) • Vacuum hoses damages or improper connection • Fuel pump malfunction • Fuel pressure regulator malfunction • Fuel line clogged • Fuel filter clogged • Fuel runout • Poor quality fuel • Fuel leakage in fuel line • Insufficient compression • Variable valve timing control system improper operation • Purge control solenoid valve malfunction • PCV valve malfunction • EGR valve malfunction • Related connector and terminal malfunction • Related wiring harness malfunction • PCM malfunction

Diagnostic procedure

STEP	INSPECTION		ACTION
1	**VERIFY FREEZE FRAME DATA AND DIAGNOSTIC MONITORING TEST RESULTS HAVE BEEN RECORDED** • Have FREEZE FRAME DATA and DIAGNOSTIC MONITORING TEST RESULTS (Misfire related) been recorded?	Yes	Go to the next step.
		No	Record FREEZE FRAME DATA and DIAGNOSTIC MONITORING TEST RESULTS on repair order, then go to the next step.
2	**VERIFY RELATED REPAIR INFORMATION AVAILABILITY** • Check for related Service Bulletins and/or on-line repair information availability. • Is any related repair information available?	Yes	Perform repair or diagnosis according to the available repair information. • If the vehicle is not repaired, go to the next step.
		No	Go to the next step.
3	**VERIFY RELATED PENDING CODE OR STORED DTCs** • Turn ignition switch to OFF, then ON (Engine off). • Verify related pending code or stored DTCs. • Are other DTCs present?	Yes	Go to appropriate DTC troubleshooting. (See 01–02C–13 DTC TABLE [AJ].)
		No	Go to the next step.

STEP	INSPECTION		ACTION
4	**VERIFY CURRENT INPUT SIGNAL STATUS (KEY TO ON/IDLE)** • Access APP1, APP2, ECT, IAT, MAF, RPM, TP_REL and VSS PIDs using the WDS or equivalent. (See 01–40C–6 PCM INSPECTION [AJ].) • Is there any signal that is far out of specification when ignition switch is ON and engine runs at idle?	Yes	Inspect suspected circuit or part or both according to inspection results. (See 01–40C–6 PCM INSPECTION [AJ].) Then go to Step 19.
		No	Go to the next step.
5	**VERIFY CURRENT INPUT SIGNAL STATUS UNDER TROUBLE CONDITION** • Inspect same PIDs as in Step 4 when simulating FREEZE FRAME DATA condition. • Is there any signal which causes drastic changes?	Yes	Inspect suspected circuit or part or both according to inspection results. (See 01–40C–6 PCM INSPECTION [AJ].) Then go to Step 19.
		No	Go to the next step.
6	**INSPECT CMP SENSOR** • Inspect CMP sensor. (See 01–40C–39 CAMSHAFT POSITION (CMP) SENSOR INSPECTION [AJ].) • Is there any malfunction?	Yes	Inspect installation condition and damages on timing belt and gears, repair faulty parts. • If it is normal, replace CMP sensor. (See 01–40C–39 CAMSHAFT POSITION (CMP) SENSOR REMOVAL/INSTALLATION [AJ].) Then go to Step 19.
		No	Go to the next step.
7	**VERIFY CKP SENSOR INSTALLATION CONDITION** • Check for CKP sensor looseness. • Is CKP sensor loose?	Yes	Retighten CKP sensor, then go to Step 19. (See 01–40C–40 CRANKSHAFT POSITION (CKP) SENSOR REMOVAL/INSTALLATION [AJ].)
		No	Go to the next step.
8	**INSPECT IGNITION SYSTEM OPERATION** • Perform Spark Test. (See 01–03C–68 Spark Test.) • Is result of Spark Test normal?	Yes	Go to the next step.
		No	Repair or replace malfunctioning part according to spark test result, then go to Step 19.
9	**INSPECT MAF PID** • Start engine. • Access MAF PID using the WDS or equivalent. • Verify that MAF PID changes quickly according to race engine RPM. • Is MAF PID response normal?	Yes	Go to the next step.
		No	Replace MAF/IAT sensor, then go to Step 19. (See 01–13C–2 INTAKE AIR SYSTEM REMOVAL/INSTALLATION [AJ].)
10	**INSPECT EXCESSIVE AIR SUCTION IN INTAKE AIR SYSTEM** • Inspect for air leakage at the following: — Between MAF/IAT sensor and throttle body — Between throttle body and dynamic chamber • Is there any malfunction?	Yes	Repair or replace suspected part, then go to Step 19.
		No	Go to the next step.
11	**INSPECT FUEL LINE PRESSURE** • Turn the ignition switch off. • Inspect fuel line pressure. (See 01–14A–7 FUEL LINE PRESSURE INSPECTION [L3, AJ].) • Is there any malfunction?	Yes	If fuel line pressure is too low, go to the next step. If fuel line pressure is excessively high, check as follows: • Fuel pump maximum pressure • Fuel return line for clogging — If all above are normal, replace pressure regulator. (See 01–14A–35 PRESSURE REGULATOR INSPECTION [L3, AJ].) Then go to Step 19.
		No	Go to step 18.
12	**INSPECT FUEL LINE FROM FUEL PUMP TO FUEL DELIVERY PIPE** • Visually inspect for fuel leakage in fuel line for any leakage. • Is any fuel leakage found?	Yes	Replace suspected fuel line, then go to Step 19.
		No	Inspect low-pressure side fuel filter for the following: • Foreign material or stain inside fuel filter Perform the following actions as result: • If foreign material or stain is found inside fuel filter (low-pressure side), clean of fuel tank and filter. • If normal, replace fuel pump unit. (See 01–14A–13 FUEL PUMP UNIT REMOVAL/INSTALLATION [L3, AJ].) Then, go to Step 22.

STEP	INSPECTION		ACTION
13	**INSPECT ENGINE COMPRESSION** • Inspect engine compression. (See 01–10C–6 COMPRESSION INSPECTION [AJ].) • Is it normal?	Yes	Go to the next step.
		No	Implement engine overhaul for repairs, then go to Step 19.
14	**INSPECT VARIABLE VALVE TIMING CONTROL SYSTEM OPERATION** • Inspect variable valve timing control system operation. (See 01–03C–74 Variable Valve Timing Control System Operation Inspection.) • Does variable timing control system work properly?	Yes	Go to the next step.
		No	Repair or replace malfunctioning part according to variable valve timing control system inspection results, then go to Step 19.
15	**INSPECT OPERATION OF PURGE CONTROL SOLENOID VALVE** • Inspect purge control system operation. (See 01–03C–69 Purge Control System Inspection.) • Does purge control system work properly?	Yes	Go to the next step.
		No	Repair or replace malfunctioning part according to purge control system inspection results, then go to Step 19.
16	**INSPECT PCV VALVE OPERATION** • Turn the ignition switch off. • Remove PCV valve and check valve operation. (See 01–16A–23 POSITIVE CRANKCASE VENTILATION (PCV) VALVE INSPECTION [AJ].) • Is PCV valve operation normal?	Yes	Replace PCV valve, then go to Step 19.
		No	Go to the next step.
17	**INSPECT OPERATION OF EGR VALVE** • Remove EGR valve. (See 01–16A–17 EGR VALVE REMOVAL/INSTALLATION [AJ].) • Visually check whether it is stuck to open. • Is EGR valve stuck to open?	Yes	Go to the next step.
		No	Repair or replace EGR valve, then go to Step 19. (See 01–16A–17 EGR VALVE REMOVAL/INSTALLATION [AJ].)
8	**INSPECT SEALING OF ENGINE COOLANT PASSAGE** **Warning** • **Removing radiator cap when radiator is hot is dangerous. Scalding coolant and steam may shoot out and cause serious injury.** • **When removing radiator cap, wrap thick cloth around and turn it slowly.** • Remove radiator cap. • Implement procedure to bleed air from engine coolant, then run engine at idle. • Are there any small bubbles which make engine coolant white at filling opening? **Note** • Large bubbles are normal since they are remaining air coming out from engine coolant passage.	Yes	Air gets in from poor sealing of head gasket or other areas between combustion chamber and engine coolant passage. Repair or replace faulty parts, then go to the next step.
		No	Go to the next step.
19	**VERIFY TROUBLESHOOTING OF DTC P0300 COMPLETED** • Make sure to reconnect all disconnected connectors. • Clear DTC from PCM memory using WDS or equivalent. • Perform the KOER SELF TEST using the WDS or equivalent. (See 01–02C–8 KOEO/KOER SELF TEST [AJ].) • Is the PENDING CODE same DTC present?	Yes	Replace PCM, then go to the next step. (See 01–40C–5 PCM REMOVAL/INSTALLATION [AJ].)
		No	Go to the next step.

STEP	INSPECTION		ACTION
20	**VERIFY AFTER REPAIR PROCEDURE** • Perform "AFTER REPAIR PROCEDURE". (See 01–02C–7 AFTER REPAIR PROCEDURE [AJ].) • Are any DTCs present?	Yes	Go to the applicable DTC inspection. (See 01–02C–13 DTC TABLE [AJ].)
		No	Troubleshooting completed.

DTC P0301, P0302, P0303, P0304, P0305, P0306 [AJ]

E6U010200000W49

DTC P0301 **DTC P0302** **DTC P0303** **DTC P0304** **DTC P0305** **DTC P0306**	**Cylinder No.1 misfire detected** **Cylinder No.2 misfire detected** **Cylinder No.3 misfire detected** **Cylinder No.4 misfire detected** **Cylinder No.5 misfire detected** **Cylinder No.6 misfire detected**
DETECTION CONDITION	• The PCM monitors the crankshaft position sensor input signal interval time. The PCM calculates the change of the interval time for each cylinder. If the change of interval time exceeds the pre programmed criteria, the PCM detects a misfire in the corresponding cylinder. when the engine is running, the PCM counts the number of misfires that occurred at **200 crankshaft revolutions** and **1,000 crankshaft revolutions** and calculates the misfire ratio for each crankshaft revolution. If the ratio exceeds the pre programmed criteria, the PCM determines that a misfire, which can damage the catalytic converter or affect emission performance, has occurred. **Diagnostic support note** • This is a continuous monitor (Misfire). • MIL illuminates if the PCM detects the misfire which affects emission performance in two consecutive drive cycles or in one drive cycle while DTC for the same malfunction has been stored in the PCM. • MIL flashes if the PCM detects the misfire which can damage the catalytic converter during the first drive cycle. • PENDING CODE is available if the PCM detects the misfire which affects emission performance during the first drive cycle. • FREEZE FRAME DATA is available. • DTC is stored in the PCM memory.
POSSIBLE CAUSE	• Spark plug malfunction • Ignition system malfunction • Ignition coil malfunction • Fuel injector malfunction • Air suction in intake air system (between dynamic chamber and cylinder head) • Inadequate engine compression due to engine internal malfunction • Related connector or terminal malfunction • Related wiring harness malfunction • PCM malfunction

Diagnostic procedure

STEP	INSPECTION		ACTION
1	**VERIFY FREEZE FRAME DATA AND DIAGNOSTIC MONITORING TEST RESULTS HAVE BEEN RECORDED** • Have FREEZE FRAME DATA and DIAGNOSTIC MONITORING TEST RESULTS (Misfire related) been recorded?	Yes	Go to the next step.
		No	Record FREEZE FRAME DATA and DIAGNOSTIC MONITORING TEST RESULTS on repair order, then go to the next step.
2	**VERIFY RELATED REPAIR INFORMATION AVAILABILITY** • Check for related Service Bulletins and/or on-line repair information availability. • Is any related repair information available?	Yes	Perform repair or diagnosis according to the available repair information. • If the vehicle is not repaired, go to the next step.
		No	Go to the next step.
3	**VERIFY RELATED PENDING CODE OR STORED DTCs** • Turn ignition switch to OFF then ON (Engine off). • Verify related pending code or stored DTCs. • Is other DTCs present?	Yes	Go to appropriate DTC troubleshooting. (See 01–02C–13 DTC TABLE [AJ].)
		No	Go to the next step.

STEP	INSPECTION		ACTION
4	**VERIFY CURRENT INPUT SIGNAL STATUS (KEY TO ON /IDLE)** • Access APP1, APP2, ECT, IAT, MAF, RPM TP_REL and VSS PIDs using the WDS or equivalent. (See 01–40C–6 PCM INSPECTION [AJ].) • Is there any signal that is far out of specification when ignition switch is ON and engine runs at idle?	Yes	Inspect suspected circuit or part or both according to inspection results. Then go to Step 13. (See 01–40C–6 PCM INSPECTION [AJ].)
		No	Go to the next step.
5	**VERIFY CURRENT INPUT SIGNAL STATUS UNDER TROUBLE CONDITION** • Inspect same PIDs as in Step 4 when simulating FREEZE FRAME DATA condition. • Is there any signal which causes drastic changes?	Yes	Inspect suspected circuit or part or both according to inspection results. Then go to Step 13. (See 01–40C–6 PCM INSPECTION [AJ].)
		No	Go to the next step.
6	**INSPECT SPARK PLUG CONDITION** • Turn the ignition switch off. • Remove spark plug from suspected cylinder. • Check spark plug condition: — Cracks — Excess wear — Gap — Wet • Is any problem found on spark plug?	Yes	• If spark plug is wet, fuel flooding is suspected. Go to step 9. • If spark plug has a crack, excess wear or improper gap, replace faulty spark plug. Then go to Step 13. (See 01–18A–4 SPARK PLUG REMOVAL/ INSTALLATION [L3, AJ].)
		No	Go to the next step.
7	**INSPECT IGNITION SYSTEM OPERATION FOR SUSPECTED CYLINDER** • Perform Spark Test for suspected cylinder. (See 01–03C–68 Spark Test.) • Is result of Spark Test normal?	Yes	Go to the next step.
		No	Replace or replace malfunctioning part according to spark test results, then go to Step 13.
8	**INSPECT FUEL INJECTOR HARNESS** • Remove intake air system parts. • Disconnect fuel injector connector on suspected cylinder. • Connect noid light to fuel injector connector terminals. • Check light dimness during cranking. • Does noid light illuminate?	Yes	Go to the next step.
		No	Check fuel injector harnesses. Repair or replace it if necessary, then go to Step 13.
9	**INSPECT FUEL INJECTOR OPERATION** • Remove fuel injector from suspected cylinder. (See 01–14A–27 FUEL INJECTOR REMOVAL/INSTALLATION [AJ].) • Swap injector with injector on other cylinder. • Start engine and run it at idle. • Is there misfire DTC for the cylinder which has a suspected fuel injector?	Yes	Replace injector, then go to step 13. (See 01–14A–27 FUEL INJECTOR REMOVAL/ INSTALLATION [AJ].)
		No	Go to the next step.
10	**INSPECT FOR AIR SUCTION AT INTAKE AIR SYSTEM** • Inspect for air leakage at the following: — Around connection of dynamic chamber and intake manifold — Around connection of intake manifold and cylinder head • Is air leakage found?	Yes	Repair or replace suspected part, then go to Step 13.
		No	Go to the next step.

STEP	INSPECTION		ACTION
11	**INSPECT SEALING OF ENGINE COOLANT PASSAGE** **Warning** • **Removing radiator cap when radiator is hot is dangerous, Scalding coolant and steam may shoot out and cause serious injury.** • **When removing radiator cap, wrap thick cloth around and turn it slowly.** • Remove radiator cap. • Implement procedure to bleed air from engine coolant, then run engine at idle. • Are there any small bubbles which make engine coolant white at filling opening? **Note** • Large bubbles are normal since they are remaining air coming out from engine coolant passage.	Yes	Air gets in from poor sealing of head gasket or other areas between combustion chamber and engine coolant passage. Repair or replace faulty parts, then go to Step 1
		No	Go to the next step.
12	**INSPECT ENGINE COMPRESSION** • Inspect engine compression. (See 01–10C–6 COMPRESSION INSPECTION [AJ].) • Is engine compression normal?	Yes	Go to the next step.
		No	Overhaul the engine, then go to the next step.
13	**VERIFY TROUBLESHOOTING OF MISFIRE DTC COMPLETED** • Make sure to reconnect all disconnected connectors. • Clear DTC from PCM memory using WDS or equivalent. • Perform the KOER SELF TEST using the WDS or equivalent. (See 01–02C–8 KOEO/KOER SELF TEST [AJ].) • Is the PENDING CODE same DTC present?	Yes	Replace PCM, then go to the next step. (See 01–40C–5 PCM REMOVAL/INSTALLATION [AJ].)
		No	Go to the next step.
14	**VERIFY AFTER REPAIR PROCEDURE** • Perform "AFTER REPAIR PROCEDURE". (See 01–02C–7 AFTER REPAIR PROCEDURE [AJ].) • Are any DTCs present?	Yes	Go to the applicable DTC inspection. (See 01–02C–13 DTC TABLE [AJ].)
		No	Troubleshooting completed.

DTC P0327 [AJ]

E6U010200000W50

DTC P0327	KS circuit low input
DETECTION CONDITION	• The PCM monitors input signal from the KS when the engine is running. If the input voltage at PCM terminals between 2AF and 2AC is **below 0.01 V**, the PCM determines that the KS circuit has malfunction. **Diagnostic support note** • This is a continuous monitor (CCM). • MIL illuminates if the PCM detects the above malfunction condition during the first drive cycle. • FREEZE FRAME DATA is available. • DTC is stored in the PCM memory.
POSSIBLE CAUSE	• KS malfunction • Connector or terminal malfunction • Open circuit or short to ground in wiring harness between KS connector terminal B and PCM terminal 2AF • Open circuit or short to ground in wiring harness between KS connector terminal A and PCM terminal 2AC • Short KS two wires • PCM malfunction

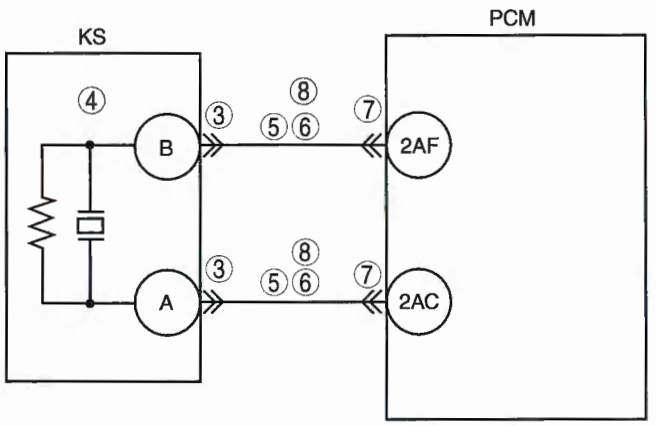

KS
WIRING HARNESS-SIDE CONNECTOR

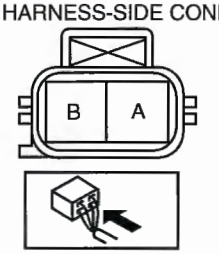

PCM
WIRING HARNESS-SIDE CONNECTOR

2BE	2BA	2AW	2AS	2AO	2AK	2AG	2AC	2Y	2U	2Q	2M	2I	2E	2A
2BF	2BB	2AX	2AT	2AP	2AL	2AH	2AD	2Z	2V	2R	2N	2J	2F	2B
2BG	2BC	2AY	2AU	2AQ	2AM	2AI	2AE	2AA	2W	2S	2O	2K	2G	2C
2BH	2BD	2AZ	2AV	2AR	2AN	2AJ	2AF	2AB	2X	2T	2P	2L	2H	2D

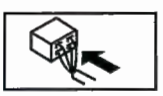

Diagnostic procedure

STEP	INSPECTION		ACTION
1	**VERIFY FREEZE FRAME DATA HAS BEEN RECORDED** • Has FREEZE FRAME DATA been recorded?	Yes	Go to the next step.
		No	Record the FREEZE FRAME DATA on the repair order, then go to the next step.
2	**VERIFY RELATED REPAIR INFORMATION AVAILABILITY** • Verify related Service Bulletins and/or on-line repair information availability. • Is any related repair information available?	Yes	Perform repair or diagnosis according to the available repair information. • If the vehicle is not repaired, go to the next step.
		No	Go to the next step.
3	**INSPECT KS CONNECTOR TERMINAL** • Turn the ignition switch off. • Disconnect the KS connector. • Inspect for poor connection at terminals A and B (such as damaged/pulled-out pins, corrosion). • Is there any malfunction?	Yes	Repair the terminal, then go to Step 9.
		No	Go to the next step.
4	**INSPECT KS** • Perform KS inspection. (See 01–40C–38 KNOCK SENSOR (KS) INSPECTION [AJ]) • Is KS normal?	Yes	Go to the next step.
		No	Replace the KS, then go to the next step.
5	**INSPECT KS CIRCUITS FOR SHORT TO GROUND** • Inspect the continuity between following terminals: — KS female terminal A and body ground — KS female terminal B and body ground • Is there continuity?	Yes	Repair or replace suspected wiring harness, then go to Step 9.
		No	Go to the next step.
6	**INSPECT FOR SHORT CIRCUITS** • Inspect for continuity between KS female terminals A and B. • Is there continuity?	Yes	Repair or replace the wiring harness, then go to Step 9.
		No	Go to the next step.
7	**INSPECT PCM CONNECTOR TERMINAL** • Turn the ignition switch off. • Disconnect the PCM connector. • Inspect for poor connection at terminals 2AF and 2AC (such as damaged/pulled-out pins, corrosion). • Is there any malfunction?	Yes	Repair terminal, then go to Step 9.
		No	Go to the next step.
8	**INSPECT KS CIRCUITS FOR OPEN CIRCUIT** • Disconnect the PCM connector. • Inspect for continuity between the following terminals: — KS female terminal A and PCM terminal 2AF — KS female terminal B and PCM terminal 2AC • Is there continuity?	Yes	Go to the next step.
		No	Repair or replace the wiring harness, then go to Step 9.
9	**VERIFY TROUBLESHOOTING OF DTC P0327 COMPLETED** • Make sure to reconnect all disconnected connectors. • Clear DTC from PCM memory using WDS or equivalent. • Perform the KOEO or KOER SELF TEST using the WDS or equivalent. (See 01–02C–8 KOEO/KOER SELF TEST [AJ].) • Is the PENDING CODE same DTC present?	Yes	Replace the PCM, then go to the next step. (See 01–40C–5 PCM REMOVAL/INSTALLATION [AJ].)
		No	Go to the next step.
10	**VERIFY AFTER REPAIR PROCEDURE** • Perform the "AFTER REPAIR PROCEDURE". (See 01–02C–7 AFTER REPAIR PROCEDURE [AJ].) • Are any DTC present?	Yes	Go to the applicable DTC troubleshooting. (See 01–02C–13 DTC TABLE [AJ].)
		No	Troubleshooting completed.

DTC P0328 [AJ]

E6U010200000W51

DTC P0328	KS circuit high input
DETECTION CONDITION	• The PCM monitors the input signal from the KS when the engine is running. If the input voltage at PCM terminals between 2AF and 2AC is **above 4.79 V**, the PCM determines that KS circuit has a malfunction. **Diagnostic support note** • This is a continuous monitor (CCM). • MIL illuminates if the PCM detects the above malfunction condition during the first drive cycle. • FREEZE FRAME DATA is available. • The DTC is stored in the PCM memory.
POSSIBLE CAUSE	• KS malfunction • Connector or terminal malfunction • Short to power supply in wiring harness between KS terminal A and PCM terminal 2AF • Short to power supply in wiring harness between KS terminal B and PCM terminal 2AC • PCM malfunction

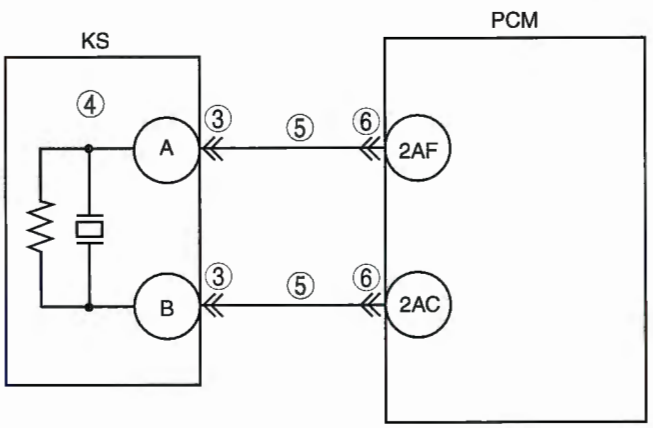

KS
WIRING HARNESS-SIDE CONNECTOR

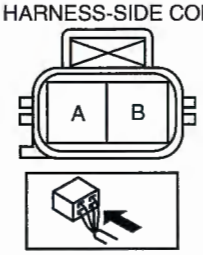

PCM
WIRING HARNESS-SIDE CONNECTOR

2BE	2BA	2AW	2AS	2AO	2AK	2AG	2AC	2Y	2U	2Q	2M	2I	2E	2A
2BF	2BB	2AX	2AT	2AP	2AL	2AH	2AD	2Z	2V	2R	2N	2J	2F	2B
2BG	2BC	2AY	2AU	2AQ	2AM	2AI	2AE	2AA	2W	2S	2O	2K	2G	2C
2BH	2BD	2AZ	2AV	2AR	2AN	2AJ	2AF	2AB	2X	2T	2P	2L	2H	2D

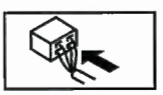

Diagnostic procedure

STEP	INSPECTION		ACTION
1	**VERIFY FREEZE FRAME DATA HAS BEEN RECORDED** • Has FREEZE FRAME DATA been recorded?	Yes	Go to the next step.
		No	Record the FREEZE FRAME DATA on the repair order, then go to the next step.
2	**VERIFY RELATED REPAIR INFORMATION AVAILABILITY** • Verify related Service Bulletins and/or on-line repair information availability. • Is any related repair information available?	Yes	Perform repair or diagnosis according to the available repair information. • If the vehicle is not repaired, go to the next step.
		No	Go to the next step.
3	**INSPECT KS CONNECTOR TERMINAL** • Turn the ignition switch off. • Disconnect KS connector. • Inspect for poor connection at terminals A and B (such as damaged/pulled-out pins, corrosion). • Is there any malfunction?	Yes	Repair the terminal, then go to step 7.
		No	Go to the next step.
4	**INSPECT KS** • Perform KS inspection. (See 01–40C–38 KNOCK SENSOR (KS) INSPECTION [AJ].) • Is the KS normal?	Yes	Go to the next step.
		No	Replace the KS, then go to step 7.
5	**INSPECT KNOCK SIGNAL CIRCUIT FOR SHORT TO POWER SUPPLY** • Turn the ignition switch to the ON position (Engine off). • Measure the voltage between KS terminal A and body ground and KS terminal B and body ground? • Is any voltage reading?	Yes	Repair or replace wiring harness for short to power supply, then go to step 7.
		No	Go to the next step.
6	**INSPECT PCM CONNECTOR** • Disconnect PCM connector. • Inspect for poor connection (such as damaged/pulled-out pins, corrosion). • Is there any malfunction?	Yes	Repair or replace the terminal, then go to the next step.
		No	Go to the next step.
7	**VERIFY TROUBLESHOOTING OF DTC P0328 COMPLETED** • Make sure to reconnect all disconnected connectors. • Clear DTC from PCM memory using WDS or equivalent. • Perform the KOEO or KOER SELF TEST using the WDS or equivalent. (See 01–02C–8 KOEO/KOER SELF TEST [AJ].) • Is the PENDING CODE same DTC present?	Yes	Replace the PCM, then go to the next step. (See 01–40C–5 PCM REMOVAL/INSTALLATION [AJ].)
		No	Go to the next step.
8	**VERIFY AFTER REPAIR PROCEDURE** • Perform the "AFTER REPAIR PROCEDURE". (See 01–02C–7 AFTER REPAIR PROCEDURE [AJ].) • Are any DTC present?	Yes	Go to the applicable DTC troubleshooting. (See 01–02C–13 DTC TABLE [AJ].)
		No	Troubleshooting completed.

DTC P0335 [AJ]

E6U010200000W52

DTC P0335	CKP sensor circuit malfunction
DETECTION CONDITION	• If the PCM does not receive the input voltage from the CKP sensor for **4.2 s** when MAF is **1.95 g/s {0.258 lb/min} or above**, the PCM determines that the CKP sensor circuit has a malfunction. **Diagnostic support note** • This is a continuous monitor (CCM). • MIL illuminates if the PCM detects the above malfunction conditions during the first drive cycle. • FREEZE FRAME DATA is available. • DTC is stored in the PCM memory.
POSSIBLE CAUSE	• CKP sensor malfunction • Connector or terminal malfunction • CKP sensor is dirty • CKP sensor pulse wheel malfunction • Short to ground circuit between CKP sensor terminal B and PCM terminal 2Z • Short to ground circuit between CKP sensor terminal A and PCM terminal 2Y • Short to power circuit between CKP sensor terminal B and PCM terminal 2Z • Short to power circuit between CKP sensor terminal A and PCM terminal 2Y • Short each harness CKP sensor terminal A and B • Open circuit between CKP sensor terminal B and PCM terminal 2Z • Open circuit between CKP sensor terminal A and PCM terminal 2Y • PCM malfunction

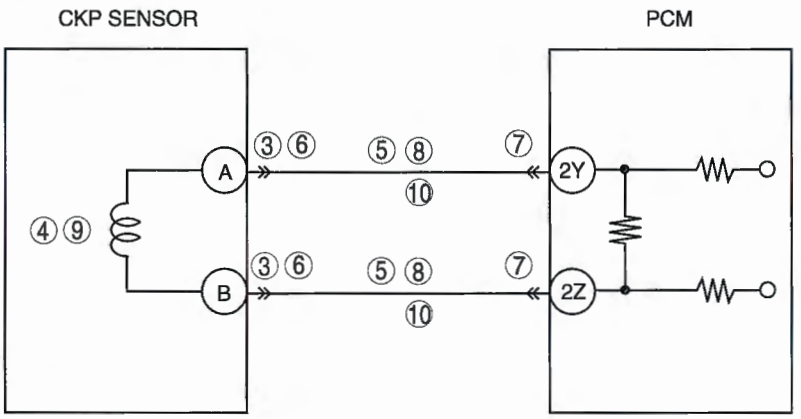

CKP SENSOR
HARNESS SIDE CONNECTOR

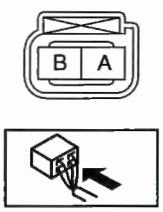

PCM
WIRING HARNESS-SIDE CONNECTOR

2BE	2BA	2AW	2AS	2AO	2AK	2AG	2AC	2Y	2U	2Q	2M	2I	2E	2A
2BF	2BB	2AX	2AT	2AP	2AL	2AH	2AD	2Z	2V	2R	2N	2J	2F	2B
2BG	2BC	2AY	2AU	2AQ	2AM	2AI	2AE	2AA	2W	2S	2O	2K	2G	2C
2BH	2BD	2AZ	2AV	2AR	2AN	2AJ	2AF	2AB	2X	2T	2P	2L	2H	2D

Diagnostic procedure

STEP	INSPECTION		ACTION
1	**VERIFY FREEZE FRAME DATA HAS BEEN RECORDED** • Has FREEZE FRAME DATA been recorded?	Yes	Go to the next step.
		No	Record FREEZE FRAME DATA on repair order, then go to the next step.
2	**VERIFY RELATED REPAIR INFORMATION AVAILABILITY** • Check for related Service Bulletins and/or on-line repair information availability. • Is any related repair information available?	Yes	Perform repair or diagnosis according to the available repair information • If the vehicle is not repaired, go to the next step.
		No	Go to the next step.
3	**VERIFY CKP SENSOR VOLTAGE** • Disconnect CKP sensor connector. • Connect voltmeter between CKP sensor connector terminals A and B. • Check the voltage in AC range when cranking the engine. • Is there a voltage reading?	Yes	Go to the next step.
		No	Go to step 9.
4	**VERIFY CKP SENSOR RESISTANCE** • Measure CKP sensor resistance. (See 01–40C–41 CRANKSHAFT POSITION (CKP) SENSOR INSPECTION [AJ].) • Is resistance normal?	Yes	Check CKP sensor pulse wheel for damage. • If there is any malfunction, replace CKP sensor pulse wheel and go to Step 10. (See 01–10C–6 TIMING CHAIN REMOVAL/ INSTALLATION [AJ].)
		No	If resistance is **0 ohm**, then go to the next step. If resistance is infinity, then go to Step 7.
5	**INSPECT CKP SENSOR CIRCUIT FOR SHORT TO GROUND** • Turn the ignition switch off. • Check continuity between the following circuits: — CKP sensor terminal A and body ground — CKP sensor terminal B and body ground • Is there continuity?	Yes	Repair or replace harness for short to ground, then go to Step 11.
		No	Go to the next step.
6	**INSPECT CKP SENSOR CIRCUIT FOR SHORT WITH EACH OTHER** • Turn the ignition switch off. • Disconnect CKP sensor connector. • Check continuity between CKP sensor terminal A and B. • Is there continuity?	Yes	Repair or replace harness for short with each other, then go to Step 11.
		No	Go to the next step.
7	**INSPECT PCM CONNECTOR FOR POOR CONNECTION** • Turn the ignition switch off. • Disconnect PCM connector. • Check for poor connection (such as damaged, pulled-out pins, and corrosion). • Is there any malfunction?	Yes	Repair or replace the terminal, then go to Step 11.
		No	Go to the next step.
8	**INSPECT CKP SENSOR CIRCUIT FOR OPEN CIRCUIT** • Turn the ignition switch off. • Check continuity between the following circuits: — CKP sensor terminal A and PCM terminal 2Z — CKP sensor terminal B and PCM terminal 2Y • Is there continuity?	Yes	Go to the next step.
		No	Repair or replace harness for open circuit, then go to Step 11.
9	**INSPECT CKP SENSOR** • Inspect CKP sensor. (See 01–40C–41 CRANKSHAFT POSITION (CKP) SENSOR INSPECTION [AJ]) • Is there any malfunction?	Yes	Replace CKP sensor, then go to the next step. (See 01–40C–40 CRANKSHAFT POSITION (CKP) SENSOR REMOVAL/INSTALLATION [AJ].)
		No	Go to the next step.

STEP	INSPECTION		ACTION
10	**INSPECT CKP SENSOR CIRCUIT FOR SHORT TO POWER** • Turn ignition switch to ON (Engine off). • Disconnect CKP sensor connector. • Measure voltage between the following terminal and body ground. — CKP sensor terminal A — CKP sensor terminal B • Is voltage **B+**?	Yes	Repair or replace harness for short to power, then go to the next step.
		No	Go to the next step.
11	**VERIFY TROUBLESHOOTING OF DTC P0335 COMPLETED** • Make sure to reconnect all disconnected connectors. • Turn the ignition switch to the ON position. • Clear the DTC from the PCM memory using the WDS or equivalent. • Start engine. • Access MAF PID using the WDS or equivalent. **Note** • MAF PID should indicate **1.95 g/s {0.258 lb/min} or above** during this test • Is same DTC present?	Yes	Replace PCM, then go to the next step. (See 01–40C–5 PCM REMOVAL/INSTALLATION [AJ].)
		No	Go to the next step.
12	**VERIFY AFTER REPAIR PROCEDURE** • Perform "AFTER REPAIR PROCEDURE". (See 01–02C–7 AFTER REPAIR PROCEDURE [AJ].) • Are any DTCs present?	Yes	Go to the applicable DTC inspection. (See 01–02C–13 DTC TABLE [AJ].)
		No	Troubleshooting completed.

DTC P0340 [AJ]

E6U010200000W53

DTC P0340	CMP sensor (RH) circuit malfunction
DETECTION CONDITION	• The PCM monitors input voltage from the CMP sensor (RH) when the engine is running. If the CMP sensor (RH) signal timing inferred from the CKP sensor signal has deviated, PCM determines that CMP sensor (RH) circuit has malfunction. **Diagnostic support note** • This is a continuous monitor (CCM). • MIL illuminates if the PCM detects the above malfunction condition during the first drive cycle. • FREEZE FRAME DATA is available. • DTC is stored in the PCM memory.
POSSIBLE CAUSE	• CMP sensor (RH) malfunction • Connector or terminal malfunction • CMP sensor (RH) is dirty • CMP sensor (RH) malfunction • Short to ground circuit between CMP sensor (RH) terminal A and PCM terminal 2AD • Short to ground circuit between CMP sensor (RH) terminal B and PCM terminal 2AE • Short to power circuit between CMP sensor (RH) terminal A and PCM terminal 2AD • Short to power circuit between CMP sensor (RH) terminal B and PCM terminal 2AE • Short each harness CMP sensor (RH) terminal A and B • Open circuit between CMP sensor (RH) terminal A and PCM terminal 2AD • Open circuit between CMP sensor (RH) terminal B and PCM terminal 2AE • Timing chain or improper valve timing • Loose timing chain or improper valve timing • Loose camshaft sprocket lock bolt • Loose crankshaft pulley lock bolt • PCM malfunction

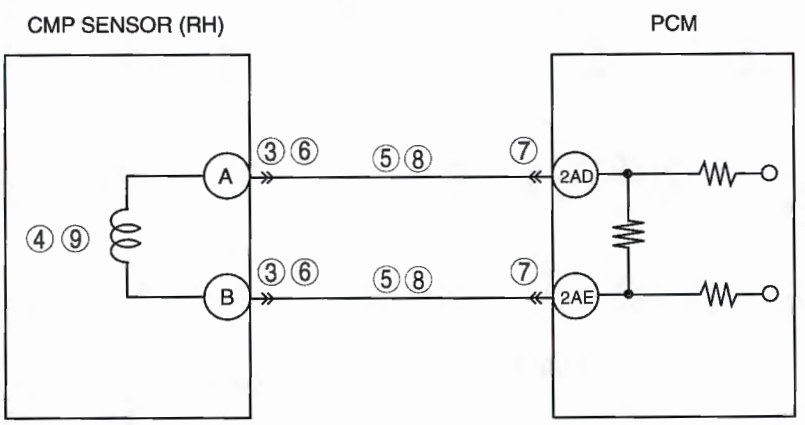

CMP SENSOR (RH)

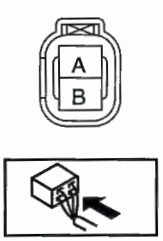

PCM
WIRING HARNESS-SIDE CONNECTOR

2BE	2BA	2AW	2AS	2AO	2AK	2AG	2AC	2Y	2U	2Q	2M	2I	2E	2A
2BF	2BB	2AX	2AT	2AP	2AL	2AH	2AD	2Z	2V	2R	2N	2J	2F	2B
2BG	2BC	2AY	2AU	2AQ	2AM	2AI	2AE	2AA	2W	2S	2O	2K	2G	2C
2BH	2BD	2AZ	2AV	2AR	2AN	2AJ	2AF	2AB	2X	2T	2P	2L	2H	2D

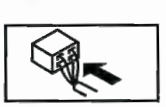

Diagnostic procedure

STEP	INSPECTION		ACTION
1	**VERIFY FREEZE FRAME DATA HAS BEEN RECORDED** • Has FREEZE FRAME DATA been recorded?	Yes	Go to the next step.
		No	Record FREEZE FRAME DATA on repair order, then go to the next step.
2	**VERIFY RELATED REPAIR INFORMATION AVAILABILITY** • Check for related Service Bulletins and/or on-line repair information availability. • Is any related repair information available?	Yes	Perform repair or diagnosis according to the available repair information. • If the vehicle is not repaired, go to the next step.
		No	Go to the next step.
3	**VERIFY CMP SENSOR (RH) VOLTAGE** • Disconnect CMP sensor (RH) connector. • Connect voltmeter between CMP sensor (RH) connector terminals A and B. • Check the voltage in AC range when cranking the engine. • Is there a voltage reading?	Yes	Go to the next step.
		No	Go to step 9.
4	**VERIFY CMP SENSOR (RH) RESISTANCE** • Measure CMP sensor (RH) resistance. (See 01–40C–39 CAMSHAFT POSITION (CMP) SENSOR INSPECTION [AJ].) • Is resistance normal?	Yes	Check CMP sensor (RH) pulse wheel for damage. • If there is any malfunction, replace CMP sensor (RH) pulse wheel and go to Step 12. (See 01–10C–6 TIMING CHAIN REMOVAL/INSTALLATION [AJ].)
		No	If resistance is **0 ohm**, then go to the next step. If resistance is infinity, then go to Step 7.
5	**INSPECT CMP SENSOR (RH) CIRCUIT FOR SHORT TO GROUND** • Turn the ignition switch off. • Check continuity between the following circuits: — CMP sensor (RH) terminal A and body ground — CMP sensor (RH) terminal B and body ground • Is there continuity?	Yes	Repair or replace harness for short to ground, then go to Step 12.
		No	Go to the next step.
6	**INSPECT CMP SENSOR (RH) CIRCUIT FOR SHORT WITH EACH OTHER** • Turn the ignition switch off. • Disconnect CMP sensor (RH) connector. • Check continuity between CMP sensor (RH) terminal A and B. • Is there continuity?	Yes	Repair or replace harness for short with each other, then go to Step 12.
		No	Go to the next step.
7	**INSPECT PCM CONNECTOR FOR POOR CONNECTION** • Turn the ignition switch off. • Disconnect PCM connector. • Check for poor connection (such as damaged, pulled-out pins, and corrosion). • Is there any malfunction?	Yes	Repair or replace the terminal, then go to Step 12.
		No	Go to the next step.
8	**INSPECT CMP SENSOR (RH) CIRCUIT FOR OPEN CIRCUIT** • Turn the ignition switch off. • Check continuity between the following circuits: — CMP sensor (RH) terminal A and PCM terminal 2AD — CMP sensor (RH) terminal B and PCM terminal 2AE • Is there continuity?	Yes	Go to the next step.
		No	Repair or replace harness for open circuit, then go to Step 12.
9	**INSPECT CMP SENSOR (RH)** • Inspect CMP sensor (RH). (See 01–40C–39 CAMSHAFT POSITION (CMP) SENSOR INSPECTION [AJ].) • Is there any malfunction?	Yes	Replace CMP sensor (RH), then go to the next step. (See 01–40C–39 CAMSHAFT POSITION (CMP) SENSOR REMOVAL/INSTALLATION [AJ].)
		No	Go to the next step.

STEP	INSPECTION		ACTION
10	**INSPECT STOPPER PIN MECHANISM** • Remove timing chain. • Inspect stopper pin. (See 01–10C–40 VARIABLE VALVE TIMING ACTUATOR INSPECTION [AJ].) • Is stopper pin mechanism normal?	Yes	Go to the next step.
		No	Replace variable valve timing actuator (RH), then go to Step 12. (See 01–10C–40 VARIABLE VALVE TIMING ACTUATOR REMOVAL/INSTALLATION [AJ].)
11	**TIMING CHAIN INSTALLATION** • Verify timing chain installation. (See 01–10C–6 TIMING CHAIN REMOVAL/INSTALLATION [AJ].) • Is timing chain installed properly?	Yes	Go to the next step.
		No	Reinstall timing chain, then go to the next step.
12	**VERIFY TROUBLESHOOTING OF DTC P0340 COMPLETED** • Make sure to reconnect all disconnected connectors. • Turn the ignition switch to the ON position. • Clear the DTC from the PCM memory using the WDS or equivalent. • Start engine. • Access MAF PID using the WDS or equivalent. **Note** • MAF PID should indicate **1.95 g/s {0.258 lb/min} or above** during this test • Is same DTC present?	Yes	Replace PCM, then go to the next step. (See 01–40C–5 PCM REMOVAL/INSTALLATION [AJ].)
		No	Go to the next step.
13	**VERIFY AFTER REPAIR PROCEDURE** • Perform "AFTER REPAIR PROCEDURE". (See 01–02C–7 AFTER REPAIR PROCEDURE [AJ].) • Are any DTCs present?	Yes	Go to the applicable DTC inspection. (See 01–02C–13 DTC TABLE [AJ].)
		No	Troubleshooting completed.

DTC P0345 [AJ]

E6U010200000W54

DTC P0345	CMP sensor (LH) circuit malfunction
DETECTION CONDITION	• The PCM monitors the input voltage from the CMP sensor (LH) when the engine is running. If the PCM does not receive the input voltage from the CMP sensor (LH) when the PCM receives the input signal from the CKP sensor, the PCM determines that the CMP circuit has a malfunction. **Diagnostic support note** • This is a continuous monitor (CCM). • MIL illuminates if the PCM detects the above malfunction condition during the first drive cycle. • FREEZE FRAME DATA is available. • DTC is stored in the PCM memory.
POSSIBLE CAUSE	• CMP sensor (LH) malfunction • Connector or terminal malfunction • CMP sensor (LH) is dirty • CMP sensor (LH) malfunction • Short to ground circuit between CMP sensor (LH) terminal A and PCM terminal 2AA • Short to ground circuit between CMP sensor (LH) terminal B and PCM terminal 2AB • Short to power circuit between CMP sensor (LH) terminal A and PCM terminal 2AA • Short to power circuit between CMP sensor (LH) terminal B and PCM terminal 2AB • Short each harness CMP sensor (LH) terminal A and B • Open circuit between CMP sensor (LH) terminal A and PCM terminal 2AA • Open circuit between CMP sensor (LH) terminal B and PCM terminal 2AB • Timing chain or improper valve timing • Loose timing chain or improper valve timing • Loose camshaft sprocket lock bolt • Loose crankshaft pulley lock bolt • PCM malfunction

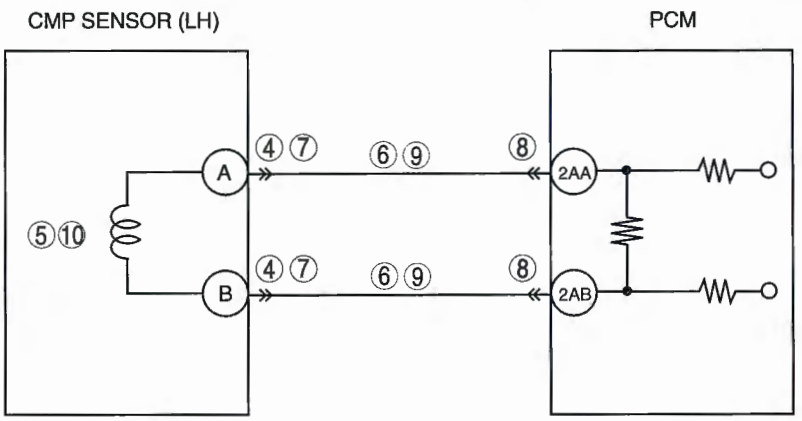

CMP SENSOR (LH)



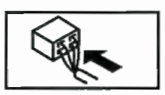

PCM
WIRING HARNESS-SIDE CONNECTOR

2BE	2BA	2AW	2AS	2AO	2AK	2AG	2AC	2Y	2U	2Q	2M	2I	2E	2A
2BF	2BB	2AX	2AT	2AP	2AL	2AH	2AD	2Z	2V	2R	2N	2J	2F	2B
2BG	2BC	2AY	2AU	2AQ	2AM	2AI	2AE	2AA	2W	2S	2O	2K	2G	2C
2BH	2BD	2AZ	2AV	2AR	2AN	2AJ	2AF	2AB	2X	2T	2P	2L	2H	2D

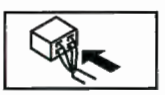

Diagnostic procedure

STEP	INSPECTION		ACTION
1	**VERIFY FREEZE FRAME DATA HAS BEEN RECORDED** • Has FREEZE FRAME DATA been recorded?	Yes	Go to the next step.
		No	Record FREEZE FRAME DATA on repair order, then go to the next step.
2	**VERIFY RELATED REPAIR INFORMATION AVAILABILITY** • Check for related Service Bulletins and/or on-line repair information availability. • Is any related repair information available?	Yes	Perform repair or diagnosis according to the available repair information. • If the vehicle is not repaired, go to the next step.
		No	Go to the next step.
3	**VERIFY RELATED PENDING CODE OR STORED DTC** • Turn the ignition switch off, then to the ON position (Engine off). • Verify the related PENDING CODE or stored DTCs. • Is the DTC P0340 also present?	Yes	Go to the DTC P0340 inspection. (See 01–02C–102 DTC P0340 [AJ].) • If the DTC P0340 dose not stored, go to the next step.
		No	Go to the next step.
4	**VERIFY CMP SENSOR (LH) VOLTAGE** • Disconnect CMP sensor (LH) connector. • Connect voltmeter between CMP sensor (LH) connector terminals A and B. • Check the voltage in AC range when cranking the engine. • Is there a voltage reading?	Yes	Go to the next step.
		No	Go to step 10.
5	**VERIFY CMP SENSOR (LH) RESISTANCE** • Measure CMP sensor (LH) resistance. (See 01–40C–39 CAMSHAFT POSITION (CMP) SENSOR INSPECTION [AJ].) • Is resistance normal?	Yes	Check CMP sensor (LH) pulse wheel for damage. • If there is any malfunction, replace CMP sensor (LH) pulse wheel and go to Step 13. (See 01–10C–6 TIMING CHAIN REMOVAL/ INSTALLATION [AJ].)
		No	If resistance is **0 ohm**, then go to the next step. If resistance is infinity, then go to Step 8.
6	**INSPECT CMP SENSOR (LH) CIRCUIT FOR SHORT TO GROUND** • Turn the ignition switch off. • Check continuity between the following circuits: — CMP sensor (LH) terminal A and body ground — CMP sensor (LH) terminal B and body ground • Is there continuity?	Yes	Repair or replace harness for short to ground, then go to Step 13.
		No	Go to the next step.
7	**INSPECT CMP SENSOR (LH) CIRCUIT FOR SHORT WITH EACH OTHER** • Turn the ignition switch off. • Disconnect CMP sensor (LH) connector. • Check continuity between CMP sensor (LH) terminal A and B. • Is there continuity?	Yes	Repair or replace harness for short with each other, then go to Step 13.
		No	Go to the next step.
8	**INSPECT PCM CONNECTOR FOR POOR CONNECTION** • Turn the ignition switch off. • Disconnect PCM connector. • Check for poor connection (such as damaged, pulled-out pins, and corrosion). • Is there any malfunction?	Yes	Repair or replace the terminal, then go to Step 13.
		No	Go to the next step.
9	**INSPECT CMP SENSOR (LH) CIRCUIT FOR OPEN CIRCUIT** • Turn the ignition switch off. • Check continuity between the following circuits: — CMP sensor (LH) terminal A and PCM terminal 2AA — CMP sensor (LH) terminal B and PCM terminal 2AB • Is there continuity?	Yes	Go to the next step.
		No	Repair or replace harness for open circuit, then go to Step 13.

STEP	INSPECTION		ACTION
10	**INSPECT CMP SENSOR (LH)** • Inspect CMP sensor (LH). (See 01–40C–39 CAMSHAFT POSITION (CMP) SENSOR INSPECTION [AJ].) • Is there any malfunction?	Yes	Replace CMP sensor (LH), then go to Step 13. (See 01–40C–39 CAMSHAFT POSITION (CMP) SENSOR REMOVAL/INSTALLATION [AJ].)
		No	Go to the next step.
11	**INSPECT STOPPER PIN MECHANISM** • Remove timing chain. • Inspect stopper pin. (See 01–10C–40 VARIABLE VALVE TIMING ACTUATOR INSPECTION [AJ].) • Is stopper pin mechanism normal?	Yes	Go to the next step.
		No	Replace variable valve timing actuator (LH), then go to Step 13. (See 01–10C–40 VARIABLE VALVE TIMING ACTUATOR REMOVAL/INSTALLATION [AJ].)
12	**INSPECT ROTOR POSITION** • Remove variable valve timing actuator (LH). (See 01–10C–40 VARIABLE VALVE TIMING ACTUATOR REMOVAL/INSTALLATION [AJ].) • Is rotor position at maximum valve timing retard?	Yes	**VARIABLE VALVE TIMING MECHANISM IS NORMAL** **Note** • This DTC is detected by intermittent concern. • Intermittent concern might be removed by cleaning mode of variable valve timing control function. Go to the next step.
		No	Replace variable valve timing actuator, go to the next step. (See 01–10C–40 VARIABLE VALVE TIMING ACTUATOR REMOVAL/INSTALLATION [AJ].)
13	**VERIFY TROUBLESHOOTING OF DTC P0345 COMPLETED** • Make sure to reconnect all disconnected connectors. • Turn the ignition switch to the ON position. • Clear the DTC from the PCM memory using the WDS or equivalent. • Start engine. • Access MAF PID using the WDS or equivalent. **Note** • MAF PID should indicate **1.95 g/s {0.268 lb/min} or above** during this test • Is same DTC present?	Yes	Replace PCM, then go to the next step. (See 01–40C–5 PCM REMOVAL/INSTALLATION [AJ].)
		No	Go to the next step.
14	**VERIFY AFTER REPAIR PROCEDURE** • Perform "AFTER REPAIR PROCEDURE". (See 01–02C–7 AFTER REPAIR PROCEDURE [AJ].) • Are any DTCs present?	Yes	Go to the applicable DTC inspection. (See 01–02C–13 DTC TABLE [AJ].)
		No	Troubleshooting completed.

DTC P0401 [AJ]

E6U010200000W55

DTC P0401	EGR flow insufficient detected
DETECTION CONDITION	• The PCM monitors the difference in intake manifold pressures when the EGR is operated and when it is stopped. If the difference is too small, the PCM determines that the EGR flow is insufficient. **Diagnostic support note** • This is an intermittent monitor (EGR). • MIL illuminates if the PCM detects the above malfunction condition in two consecutive drive cycles or in one drive cycle while the DTC for the same malfunction has been stored in the PCM. • PENDING CODE is available if the PCM detects the above malfunction condition during the first drive cycle. • FREEZE FRAME DATA is available. • DTC is stored in the PCM memory.
POSSIBLE CAUSE	• EGR valve malfunction • EGR boost sensor malfunction • EGR boost sensor solenoid valve malfunction • EGR valve gasket malfunction • PCM malfunction

Diagnostic procedure

STEP	INSPECTION		ACTION
1	**VERIFY FREEZE FRAME DATA AND DIAGNOSTIC MONITORING TEST RESULTS HAVE BEEN RECORDED** • Have FREEZE FRAME DATA and DIAGNOSTIC MONITORING TEST RESULTS (EGR related) been recorded?	Yes	Go to the next step.
		No	Record FREEZE FRAME DATA and DIAGNOSTIC MONITORING TEST RESULTS on repair order, then go to the next step.
2	**VERIFY RELATED REPAIR INFORMATION AVAILABILITY** • Check for related Service Bulletins and/or on-line repair information availability. • Is any related repair information available?	Yes	Perform repair or diagnosis according to the available repair information. • If the vehicle is not repaired, go to the next step.
		No	Go to the next step.
3	**INSPECT FOR OTHER DTCs** • Turn ignition switch to OFF then ON (Engine off). • Have other DTCs been stored?	Yes	Repair circuit malfunction for applicable DTCs. (See 01–02C–13 DTC TABLE [AJ].)
		No	Go to the next step.
4	**INSPECT VACUUM HOSE CONDITION** • Inspect vacuum hoses for clogs, damage, freezing, or vacuum leakage. • Is there any malfunction?	Yes	Replace vacuum hoses, then go to Step 9.
		No	Go to the next step.
5	**INSPECT EGR VALVE** • Inspect EGR valve. (See 01–16A–18 EGR VALVE INSPECTION [AJ].) • Is there any malfunction?	Yes	Replace EGR valve, then go to Step 9. (See 01–16A–17 EGR VALVE REMOVAL/INSTALLATION [AJ].)
		No	Go to the next step.
6	**INSPECT EGR BOOST SENSOR** • Inspect EGR boost sensor. (See 01–40C–37 EGR BOOST SENSOR INSPECTION [AJ].) • Is there any malfunction?	Yes	Replace EGR boost sensor, then go to Step 9.
		No	Go to the next step.
7	**INSPECT EGR BOOST SENSOR SOLENOID VALVE** • Inspect EGR boost sensor solenoid valve. (See 01–16A–20 EGR BOOST SENSOR SOLENOID VALVE INSPECTION [AJ].) • Is there any malfunction?	Yes	Replace EGR boost sensor solenoid valve, then go to Step 9.
		No	Go to the next step.
8	**INSPECT EGR VALVE GASKET** • Turn the ignition switch off. • Remove EGR valve. (See 01–16A–17 EGR VALVE REMOVAL/INSTALLATION [AJ].) • Is EGR valve gasket normal?	Yes	Go to the next step.
		No	Replace EGR valve gasket, then go to the next step. (See 01–16A–17 EGR VALVE REMOVAL/INSTALLATION [AJ].)
9	**MONITOR EGR SYSTEM BY DRIVE MODE** • Clear the DTC from the PCM memory using the WDS or equivalent. • Run Drive Mode 1 (See 01–02C–8 OBD-II DRIVE MODE [AJ].) • Stop vehicle and access ON BOARD READINESS TEST to inspect DRIVE MODE completion status. • Verify FUEL_EVAL PID status. • Does FUEL_EVAL PID change to Yes?	Yes	Retry this step.
		No	Go to the next step.
10	**MONITOR EGR SYSTEM BY DRIVE MODE** • Run Drive Mode 2. (See 01–02C–8 OBD-II DRIVE MODE [AJ].) • Stop vehicle and access ON BOARD SYSTEM READINESS TEST to input DRIVE MODE completion status. • Verify EGR_EVAL PID status. • Does EGR_EVAL PID change to Yes?	Yes	Go to the next step.
		No	Retry this step.

STEP	INSPECTION		ACTION
11	**VERIFY TROUBLESHOOTING OF DTC P0401 COMPLETED** • Make sure to reconnect all disconnected connectors. • Clear DTC from PCM memory using WDS or equivalent. • Perform the KOER SELF TEST using the WDS or equivalent. (See 01–02C–8 KOEO/KOER SELF TEST [AJ].) • Is the PENDING CODE same DTC present?	Yes	Go to the next step.
		No	Replace PCM, then go to the next step. (See 01–40C–5 PCM REMOVAL/INSTALLATION [AJ].)
12	**VERIFY AFTER REPAIR PROCEDURE** • Perform "AFTER REPAIR PROCEDURE". (See 01–02C–7 AFTER REPAIR PROCEDURE [AJ].) • Are any DTCs present?	Yes	Go to the applicable DTC inspection. (See 01–02C–13 DTC TABLE [AJ].)
		No	Troubleshooting completed.

DTC P0403 [AJ]

E6U010200000W56

DTC P0403	EGR valve (stepper motor) circuit malfunction
DETECTION CONDITION	• The PCM monitors the EGR valve control signal voltage and current. If the following conditions are met, the PCM determines that there is the EGR control circuit problem. — The PCM turns the EGR valve off, but the voltage of the EGR valve control signal remains low. — The PCM turns the EGR valve on, but the current of the EGR valve control signal remains high. **Diagnostic support note** • This is a continuous monitor (CCM). • MIL illuminates if the PCM detects the above malfunction condition in two consecutive drive cycles or in one drive cycle while the DTC for the same malfunction has been stored in the PCM. • PENDING CODE is available if the PCM detects the above malfunction condition during the first drive cycle. • FREEZE FRAME DATA is available. • DTC is stored in the PCM memory.
POSSIBLE CAUSE	• EGR valve malfunction • Connector or terminal malfunction • Open circuit between main relay terminal C and EGR valve terminal C • Open circuit between main relay terminal C and EGR valve terminal D • Short to ground circuit between EGR valve terminal A and PCM terminal 2R • Short to ground circuit between EGR valve terminal B and PCM terminal 2S • Short to ground circuit between EGR valve terminal E and PCM terminal 2Q • Short to ground circuit between EGR valve terminal F and PCM terminal 2O • Short to power circuit between EGR valve terminal A and PCM terminal 2R • Short to power circuit between EGR valve terminal B and PCM terminal 2S • Short to power circuit between EGR valve terminal E and PCM terminal 2Q • Short to power circuit between EGR valve terminal F and PCM terminal 2O • Open circuit between EGR valve terminal A and PCM terminal 2R • Open circuit between EGR valve terminal B and PCM terminal 2S • Open circuit between EGR valve terminal E and PCM terminal 2Q • Open circuit between EGR valve terminal F and PCM terminal 2O • PCM malfunction

DTC P0403	EGR valve (stepper motor) circuit malfunction

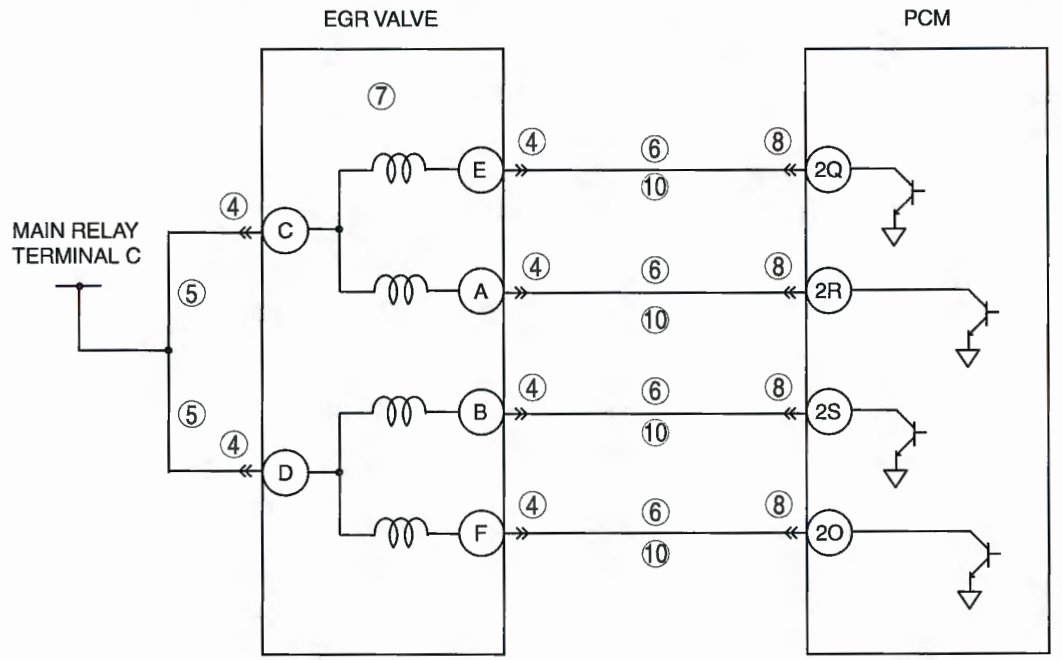

EGR VALVE
HARNESS SIDE CONNECTOR

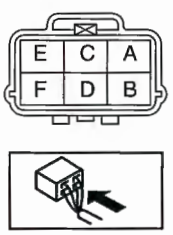

PCM
WIRING HARNESS-SIDE CONNECTOR

2BE	2BA	2AW	2AS	2AO	2AK	2AG	2AC	2Y	2U	2Q	2M	2I	2E	2A
2BF	2BB	2AX	2AT	2AP	2AL	2AH	2AD	2Z	2V	2R	2N	2J	2F	2B
2BG	2BC	2AY	2AU	2AQ	2AM	2AI	2AE	2AA	2W	2S	2O	2K	2G	2C
2BH	2BD	2AZ	2AV	2AR	2AN	2AJ	2AF	2AB	2X	2T	2P	2L	2H	2D

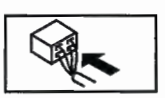

Diagnostic procedure

STEP	INSPECTION		ACTION
1	**VERIFY FREEZE FRAME DATA HAS BEEN RECORDED** • Has FREEZE FRAME DATA been recorded?	Yes	Go to the next step.
		No	Record FREEZE FRAME DATA on repair order, then go to the next step.
2	**VERIFY RELATED REPAIR INFORMATION AVAILABILITY** • Check for related Service bulletins and/or on-line repair information availability. • Is any repair information available?	Yes	Perform repair or diagnosis according to the available repair information. • If the vehicle is not repaired, go to the next step.
		No	Go to the next step.
3	**CLASSIFY INTERMITTENT CONCERN OR CONTINUOUS CONCERN** • Turn ignition switch to OFF then ON (Engine off). • Is same DTC present?	Yes	Go to the next step.
		No	Go to intermittent concern. (See 01–03C–5 INTERMITTENT CONCERN TROUBLESHOOTING [AJ].)
4	**INSPECT EGR VALVE CONNECTOR FOR POOR CONNECTION** • Turn the ignition switch off. • Disconnect EGR valve connector. • Check for poor connection (such as damaged, pulled-out pins, and corrosion). • Is there any malfunction?	Yes	Repair or replace the terminal, then go to Step 11.
		No	Go to the next step.

STEP	INSPECTION		ACTION
5	**INSPECT EGR VALVE POWER CIRCUIT FOR OPEN CIRCUIT** • Turn the ignition switch to the ON position. • Measure voltage between following circuits: — EGR valve terminal C and body ground — EGR valve terminal D and body ground • Is voltage **B+**?	Yes	Go to the next step.
		No	Repair or replace harness for open circuit, then go to Step 11.
6	**INSPECT EGR VALVE CONTROL CIRCUIT FOR SHORT TO GROUND** • Turn the ignition switch off. • Check continuity between the following circuits: — EGR valve terminal A and body ground — EGR valve terminal B and body ground — EGR valve terminal E and body ground — EGR valve terminal F and body ground • Is there continuity?	Yes	Repair or replace harness for short to ground, then go to Step 11.
		No	Go to the next step.
7	**INSPECT EGR VALVE** • Inspect EGR valve. (See 01–16A–18 EGR VALVE INSPECTION [AJ].) • Is there any malfunction?	Yes	Replace EGR valve, then go to Step 11. (See 01–16A–17 EGR VALVE REMOVAL/INSTALLATION [AJ].)
		No	Go to the next step.
8	**INSPECT PCM CONNECTOR FOR POOR CONNECTION** • Turn the ignition switch off. • Disconnect PCM connector. • Check for poor connection (such as damaged, pulled-out pins, and corrosion). • Is there any malfunction?	Yes	Repair or replace the terminal, then go to Step 11.
		No	Go to the next step.
9	**INSPECT EGR VALVE CONTROL CIRCUIT FOR OPEN CIRCUIT** • Turn the ignition switch off. • Check continuity between the following circuits: — EGR valve terminal A and PCM terminal 2R — EGR valve terminal B and PCM terminal 2S — EGR valve terminal E and PCM terminal 2Q — EGR valve terminal F and PCM terminal 2O • Is there continuity?	Yes	Go to the next step.
		No	Repair or replace harness for open circuit, then go to Step 11.
10	**INSPECT EGR VALVE CONTROL SENSOR CIRCUIT FOR SHORT TO POWER** • Turn ignition switch to ON (Engine off). • Disconnect EGR valve connector. • Measure voltage between the following terminal and body ground. — EGR valve terminal A — EGR valve terminal B — EGR valve terminal E — EGR valve terminal F • Is voltage **B+**?	Yes	Repair or replace harness for short to power, then go to the next step.
		No	Go to the next step.
11	**VERIFY TROUBLESHOOTING OF DTC P0403 COMPLETED** • Make sure to reconnect all disconnected connectors. • Clear DTC from PCM memory using WDS or equivalent. • Perform the KOEO or KOER SELF TEST using the WDS or equivalent. (See 01–02C–8 KOEO/KOER SELF TEST [AJ].) • Is the PENDING CODE same DTC present?	Yes	Replace PCM, then go to the next step. (See 01–40C–5 PCM REMOVAL/INSTALLATION [AJ].)
		No	Go to the next step.
12	**VERIFY AFTER REPAIR PROCEDURE** • Perform "AFTER REPAIR PROCEDURE". (See 01–02C–7 AFTER REPAIR PROCEDURE [AJ].) • Are any DTCs present?	Yes	Go to the applicable DTC inspection. (See 01–02C–13 DTC TABLE [AJ].)
		No	Troubleshooting completed.

DTC P0421, P0431 [AJ]

E6U010200000W57

DTC P0421 DTC P0431	**Warm-up catalyst system (RH) efficiency below threshold** **Warm-up catalyst system (LH) efficiency below threshold**
DETECTION CONDITION	• The PCM compares the number of front HO2S and rear HO2S inversions for a predetermined time. The PCM monitors the rear HO2S inversion counts when the following conditions are met: The PCM detects inversion ratio. If the inversion ratio is below threshold, the PCM determine that catalyst system has deteriorated. — The front HO2S inversion counts is as prescribed when the following monitoring conditions are met: — The accumulated occurrence time of the following monitoring conditions has exceeded the prescribed time limit: **MONITORING CONDITION** — The engine speed is **1,250—2,750 rpm.** — Calculated TWC temperature is **above 400 °C {752 °F}** — The calculated load is **15—44%** **Diagnostic support note** • This is an intermittent monitor (Catalyst). • MIL illuminates if the PCM detects the above malfunction condition in two consecutive drive cycles or in one drive cycle while the DTC for the same malfunction has been stored in the PCM. • PENDING CODE is available if the PCM detects the above malfunction condition during the first drive cycle. • DIAGNOSTIC MONITORING TEST RESULTS is available. • FREEZE FRAME DATA is available. • DTC is stored in the PCM memory.
POSSIBLE CAUSE	• WU-TWC deterioration or malfunction • Exhaust gas leakage • Looseness of HO2S (RF, LF, RR, LR) • PCM malfunction

Diagnostic procedure

STEP	INSPECTION		ACTION
1	**VERIFY FREEZE FRAME DATA AND DIAGNOSTIC MONITORING TEST RESULTS HAVE BEEN RECORDED** • Have FREEZE FRAME DATA and DIAGNOSTIC MONITORING TEST RESULTS (Catalyst related) been recorded?	Yes	Go to the next step.
		No	Record FREEZE FRAME DATA and DIAGNOSTIC MONITORING TEST RESULTS on repair order, then go to the next step.
2	**VERIFY RELATED REPAIR INFORMATION AVAILABILITY** • Check for related Service Bulletins and/or on-line repair information availability. • Is any related repair information available?	Yes	Perform repair or diagnosis according to the available repair information. • If the vehicle is not repaired, go to the next step.
		No	Go to the next step.
3	**VERIFY RELATED PENDING CODE OR STORED DTCs** • Turn ignition switch to OFF then ON (Engine off). • Verify related pending code or stored DTCs. • Are other DTCs present?	Yes	Go to appropriate DTC troubleshooting. (See 01–02C–13 DTC TABLE [AJ].)
		No	Go to the next step.
4	**INSPECT EXHAUST SYSTEM FOR EXHAUST GAS LEAKAGE** • Visually inspect for exhaust gas leakage in exhaust system. (See 01–15C–1 EXHAUST SYSTEM INSPECTION [AJ].) • Is there any exhaust gas leakage?	Yes	Repair or replace faulty exhaust system parts, then go to Step 7. (See 01–15C–2 EXHAUST SYSTEM REMOVAL/ INSTALLATION [AJ].)
		No	Go to the next step.
5	**INSPECT HO2S INSTALLATION** • Inspect for looseness of HO2S (RF, LF, RR, LR). • Is HO2S installation normal?	Yes	Go to the next step.
		No	Retighten HO2S, then go to Step 7. (See 01–15C–2 EXHAUST SYSTEM REMOVAL/ INSTALLATION [AJ].)

STEP	INSPECTION		ACTION
6	**INSPECT WU-TWC** • Clear the DTC from the PCM memory using the WDS or equivalent. • Cycle ignition switch to OFF, then back to ON. • Inspect WU-TWCs each bank. (See 01–16A–23 WARM-UP THREE-WAY CATALYTIC CONVERTER (WU-TWC) INSPECTION [L3, AJ].) • Is there any malfunction?	Yes	Replace malfunctioning WU-TWC, then go to the next step. (See 01–15C–2 EXHAUST SYSTEM REMOVAL/ INSTALLATION [AJ].)
		No	Go to the next step.
7	**VERIFY TROUBLESHOOTING OF DTC P0421 OR P0431 COMPLETED** • Make sure to reconnect all disconnected connectors. • Turn the ignition switch to the ON position. • Clear the DTC from the memory using the WDS or equivalent. • Start engine and perform DRIVE MODE except for DRIVE MODE 6. (See 01–02C–8 OBD-II DRIVE MODE [AJ].) • Is PENDING CODE same as DTC present?	Yes	Replace PCM, then go to the next step. (See 01–40C–5 PCM REMOVAL/INSTALLATION [AJ].)
		No	Go to the next step.
8	**VERIFY AFTER REPAIR PROCEDURE** • Perform "AFTER REPAIR PROCEDURE". (See 01–02C–7 AFTER REPAIR PROCEDURE [AJ].) • Are any DTCs present?	Yes	Go to the applicable DTC inspection. (See 01–02C–13 DTC TABLE [AJ].)
		No	Troubleshooting completed.

DTC P0441 [AJ]

E6U010200000W58

DTC P0441	EVAP control system incorrect purge flow
DETECTION CONDITION	• The PCM measures the purge line pressure, which is the vacuum, when the following conditions are met. If the vacuum between the charcoal canister and intake manifold does not reach the specification, the PCM determines that the EVAP system is clogged. **MONITORING CONDITION** — Engine speed: **1,500—3,550 rpm** (MTX) — Engine speed: **1,220—3,000 rpm** (ATX) — Throttle opening angle: **25%** (At engine speed is **2500 rpm**) — Vehicle speed: **69.5—136 km/h {43.2—84.5 mph}** (MTX) — Vehicle speed: **34.5—136 km/h {21.4—84.5 mph}** (ATX) **Diagnostic support note** • This is an intermittent monitor (EVAP). • MIL illuminates if the PCM detects the above malfunction condition in two consecutive drive cycles or in one drive cycle while the DTC for the same malfunction has been stored in the PCM. • PENDING CODE is available if the PCM detects the above malfunction condition during the first drive cycle. • DIAGNOSTIC MONITORING TEST RESULTS is available. • FREEZE FRAME DATA is available. • DTC is stored in the PCM memory.
POSSIBLE CAUSE	• Charcoal canister malfunction • Purge solenoid valve malfunction • EVAP system leak detection pump malfunction • EVAP hose damaged or loose • EVAP pipe damaged • PCM malfunction

Diagnostic procedure

STEP	INSPECTION		ACTION
1	**VERIFY FREEZE FRAME DATA AND DIAGNOSTIC MONITORING TEST RESULTS HAVE BEEN RECORDED** • Have FREEZE FRAME DATA and DIAGNOSTIC MONITORING TEST RESULTS (EVAP related) been recorded?	Yes	Go to the next step.
		No	Record FREEZE FRAME DATA and DIAGNOSTIC MONITORING TEST RESULTS on repair order, then go to the next step.
2	**VERIFY RELATED REPAIR INFORMATION AVAILABILITY** • Check for related Service Bulletins and/or on-line repair information availability. • Is any related repair information available?	Yes	Perform repair or diagnosis according to the available repair information. • If the vehicle is not repaired, go to the next step.
		No	Go to the next step.
3	**VERIFY RELATED PENDING CODE OR STORED DTCs** • Turn ignition switch to OFF then ON (Engine off). • Verify related pending code or stored DTCs. • Is DTC P0443 present?	Yes	Go to appropriate DTC inspection. (See 01–02C–13 DTC TABLE [AJ].)
		No	Go to the next step.
4	**DETERMINE IF LEAK CONCERN OR BLOCKAGE CONCERN** • Perform EVAP system leak inspection. (See 01–03C–70 Evaporative Emission (EVAP) System Leak Inspection.) • Is system test result failed?	Yes	Go to Step 6.
		No	Go to the next step.
5	**INSPECT PURGE SOLENOID VALVE** • Inspect purge solenoid valve. (See 01–16A–13 PURGE SOLENOID VALVE INSPECTION [L3, AJ].) • Is there any malfunction?	Yes	Replace purge solenoid valve, then go to Step 11.
		No	Inspect following parts for clogging. • Vacuum hoses between intake manifold and charcoal canister • Charcoal canister Repair or replace part, then go to Step 11.
6	**LOCATE LEAK POINT** • Check the following for leakage using ultrasonic leak detector: — Charcoal canister — Fuel filler cap — EVAP hoses and pipes — Fuel tank • Is leakage found?	Yes	Repair leakage or replace part, then go to Step 10.
		No	Go to the next step.
7	**INSPECT EVAP SYSTEM LEAK DETECTION PUMP** • Connect all disconnected connectors and hoses. • Place clamp on EVAP system leak detection pump hose between EVAP system leak detection pump and air filter. • Perform EVAP system leak inspection. (See 01–03C–70 Evaporative Emission (EVAP) System Leak Inspection.) • Does it fail test?	Yes	Go to Step 9.
		No	Go to the next step.
8	**CONFIRM EVAP SYSTEM LEAK DETECTION PUMP LEAKAGE** • Remove clamp. • Perform EVAP system leak inspection. (See 01–03C–70 Evaporative Emission (EVAP) System Leak Inspection.) • Does it fail test?	Yes	Replace EVAP system leak detection pump, then go to Step 10. (See 01–16A–5 EVAPORATIVE EMISSION (EVAP) CONTROL SYSTEM COMPONENT REMOVAL/ INSTALLATION [L3, AJ].)
		No	Go to the next step.
9	**INSPECT FUEL PUMP UNIT INSTALLATION** • Remove fuel tank. (See 01–14A–10 FUEL TANK REMOVAL/ INSTALLATION [L3, AJ].) • Visually inspect for damage, insufficient sealing or poorly installed pump unit. • Is it normal?	Yes	Go to the next step.
		No	Repair or replace fuel tank or sealing, then go to the next step.

STEP	INSPECTION		ACTION
10	**PERFORM LEAK INSPECTION** • Connect all disconnected connectors and hoses. • Perform EVAP system leak inspection. (See 01–03C–70 Evaporative Emission (EVAP) System Leak Inspection.) • Does it fail test?	Yes	Leakage still exists. Locate leak point and repair. Then go to the next step.
		No	Go to the next step
11	**VERIFY TROUBLESHOOTING OF DTC P0441 COMPLETED** • Make sure to reconnect all disconnected connectors. • Clear DTC from PCM memory using WDS or equivalent. • Perform the KOER SELF TEST using the WDS or equivalent. (See 01–02C–8 KOEO/KOER SELF TEST [AJ].) • Is the PENDING CODE same DTC present?	Yes	Replace PCM, then go to the next step. (See 01–40C–5 PCM REMOVAL/INSTALLATION [AJ].)
		No	Go to the next step.
12	**VERIFY AFTER REPAIR PROCEDURE** • Perform "AFTER REPAIR PROCEDURE". (See 01–02C–7 AFTER REPAIR PROCEDURE [AJ].) • Are any DTCs present?	Yes	Go to the applicable DTC inspection. (See 01–02C–13 DTC TABLE [AJ].)
		No	Troubleshooting completed.

DTC P0442 [AJ]

E6U010200000W59

DTC P0442	EVAP control system leak detected (small leak)
DETECTION CONDITION	• The PCM measures the pump load current (EVAP line pressure) when a certain period has passed after the EVAP system is sealed when the following monitoring conditions are met. If the load does not reach the reference current value within a certain period, PCM determines that the EVAP system has a small leak. **MONITORING CONDITION** — Ignition switch OFF — IAT: **5—35 °C {40—95 °F}** — Battery voltage: **11 V or above** — Atmospheric pressure: **72.2 kPa {542 mmHg, 21.3 inHg} or above** — Fuel tank level: **15—85%** **Diagnostic support note** • This is an intermittent monitor (EVAP). • MIL illuminates if the PCM detects the above malfunction condition in two consecutive drive cycles or in one drive cycle while the DTC for the same malfunction has been stored in the PCM. • PENDING CODE is available if the PCM detects the above malfunction condition during the first drive cycle. • DIAGNOSTIC MONITORING TEST RESULTS is available. • FREEZE FRAME DATA is available. • DTC is stored in the PCM memory.
POSSIBLE CAUSE	• Purge solenoid valve malfunction • EVAP system leak detection pump malfunction • Charcoal canister malfunction • Fuel filler cap malfunction • Fuel tank malfunction • Fuel pump unit poor seal • EVAP hose damaged or loose • EVAP pipe damaged

Diagnostic procedure

STEP	INSPECTION		ACTION
1	**VERIFY FREEZE FRAME DATA AND DIAGNOSTIC MONITORING TEST RESULTS HAVE BEEN RECORDED** • Have FREEZE FRAME DATA and DIAGNOSTIC MONITORING TEST RESULTS (EVAP related) been recorded?	Yes	Go to the next step.
		No	Record FREEZE FRAME DATA and DIAGNOSTIC MONITORING TEST RESULTS on repair order, then go to the next step.

STEP	INSPECTION		ACTION
2	**VERIFY RELATED REPAIR INFORMATION AVAILABILITY** • Check for related Service Bulletins and/or on-line repair information availability. • Is any related repair information available?	Yes	Perform repair or diagnosis according to the available repair information. • If the vehicle is not repaired, go to the next step.
		No	Go to the next step.
3	**VERIFY RELATED PENDING CODE OR STORED DTCs** • Turn ignition switch to OFF then ON (Engine off). • Verify related pending code or stored DTCs. • Is other DTC present?	Yes	Go to appropriate DTC inspection. (See 01–02C–13 DTC TABLE [AJ].)
		No	Go to the next step.
4	**CLASSIFY INTERMITTENT CONCERN OR CONTINUOUS CONCERN** • Perform EVAP system leak inspection. (See 01–03C–70 Evaporative Emission (EVAP) System Leak Inspection.) • Does it fail test?	Yes	Go to the next step.
		No	Intermittent concern exists. Inspect purge solenoid valve and EVAP system leak detection pump circuit for intermittent concern. (See 01–03C–5 INTERMITTENT CONCERN TROUBLESHOOTING [AJ].)
5	**LOCATE LEAK POINT** • Check leakage for the following using EVAP system tester: — Charcoal canister — Fuel filler cap — EVAP hoses and pipes — Fuel tank • Is leakage found?	Yes	Repair leakage or replace part, then go to Step 12.
		No	Go to the next step.
6	**INSPECT PURGE SOLENOID VALVE** • Inspect purge solenoid valve. (See 01–16A–13 PURGE SOLENOID VALVE INSPECTION [L3, AJ].) • Is there any malfunction?	Yes	Replace purge solenoid valve, then go to Step 12.
		No	Go to the next step.
7	**INSPECT EVAP SYSTEM LEAK DETECTION PUMP** • Connect all disconnected connectors and hoses. • Place clamp on EVAP system leak detection pump hose between EVAP system leak detection pump and air filter. • Perform EVAP system leak inspection. (See 01–03C–70 Evaporative Emission (EVAP) System Leak Inspection.) • Does it fail test?	Yes	Go to Step 9.
		No	Go to the next step.
8	**CONFIRM EVAP SYSTEM LEAK DETECTION PUMP LEAKAGE** • Remove clamp. • Perform EVAP system leak inspection. (See 01–03C–70 Evaporative Emission (EVAP) System Leak Inspection.) • Does it fail test?	Yes	Replace EVAP system leak detection pump, then go to Step 12. (See 01–16A–5 EVAPORATIVE EMISSION (EVAP) CONTROL SYSTEM COMPONENT REMOVAL/ INSTALLATION [L3, AJ].)
		No	Go to the next step.
9	**INSPECT FUEL TANK INSTALLATION** • Remove fuel tank. (See 01–14A–10 FUEL TANK REMOVAL/ INSTALLATION [L3, AJ].) • Visually inspect for damage, insufficient sealing or poorly installed pump unit. • Is it normal?	Yes	Go to the next step.
		No	Repair or replace fuel tank or sealing, then go to the next step.
10	**PERFORM LEAK INSPECTION** • Connect all disconnected connectors and hoses. • Perform EVAP system leak inspection. (See 01–03C–70 Evaporative Emission (EVAP) System Leak Inspection.) • Does it fail test?	Yes	Leakage still exists. Locate leak point and repair. Then go to the next step.
		No	Go to the next step.

STEP	INSPECTION		ACTION
11	**VERIFY TROUBLESHOOTING OF DTC P0442 COMPLETED** • Make sure to reconnect all disconnected connectors. • Clear DTC from PCM memory using WDS or equivalent. • Perform the KOER SELF TEST using the WDS or equivalent. (See 01–02C–8 KOEO/KOER SELF TEST [AJ].) • Is the PENDING CODE same DTC present?	Yes	Replace PCM, then go to the next step. (See 01–40C–5 PCM REMOVAL/INSTALLATION [AJ].)
		No	Go to the next step.
12	**VERIFY AFTER REPAIR PROCEDURE** • Perform "AFTER REPAIR PROCEDURE". (See 01–02C–7 AFTER REPAIR PROCEDURE [AJ].) • Are any DTCs present?	Yes	Go to the applicable DTC inspection. (See 01–02C–13 DTC TABLE [AJ].)
		No	Troubleshooting completed.

DTC P0443 [AJ]

E6U010200000W60

DTC P0443	EVAP control system purge control valve circuit malfunction
DETECTION CONDITION	• The PCM monitors the purge solenoid valve control signal voltage and current. If the following conditions are met, the PCM determines that there is the purge solenoid valve control circuit problem. — The PCM turns the purge solenoid valve off, but the voltage of the purge solenoid valve control signal remains low. — The PCM turns the purge solenoid valve on, but the current of the purge solenoid valve control signal remains high. **Diagnostic support note** • This is an continuous monitor (CCM). • MIL illuminates if the PCM detects the above malfunction condition in two consecutive drive cycles or in one drive cycle while the DTC for the same malfunction has been stored in the PCM. • PENDING CODE is available if the PCM detects the above malfunction condition during the first drive cycle. • FREEZE FRAME DATA is available. • DTC is stored in the PCM memory.
POSSIBLE CAUSE	• Purge solenoid valve malfunction • Connector or terminal malfunction • Short to ground between purge solenoid valve terminal B and PCM terminal 1BF • Open circuit between main relay terminal C and purge solenoid valve terminal A • Short to power circuit between purge solenoid valve terminal B and PCM terminal 1BF • Open circuit between purge solenoid valve terminal B and PCM terminal 1BF • PCM malfunction

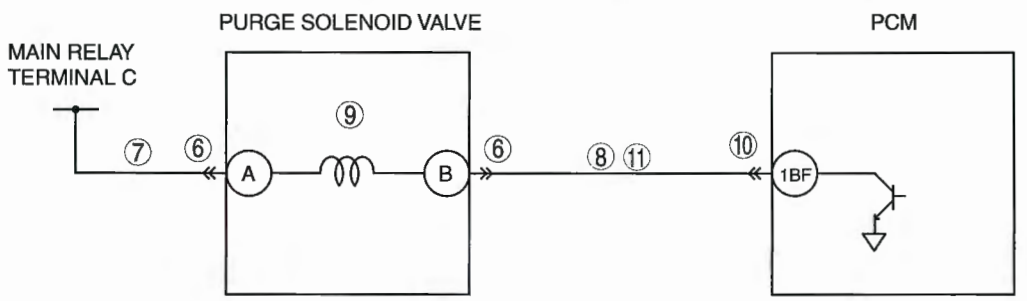

PURGE SOLENOID VALVE
HARNESS SIDE CONNECTOR



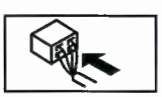

PCM
WIRING HARNESS-SIDE CONNECTOR

1BE	1BA	1AW	1AS	1AO	1AK	1AG	1AC	1Y	1U	1Q	1M	1I	1E	1A
1BF	1BB	1AX	1AT	1AP	1AL	1AH	1AD	1Z	1V	1R	1N	1J	1F	1B
1BG	1BC	1AY	1AU	1AQ	1AM	1AI	1AE	1AA	1W	1S	1O	1K	1G	1C
1BH	1BD	1AZ	1AV	1AR	1AN	1AJ	1AF	1AB	1X	1T	1P	1L	1H	1D

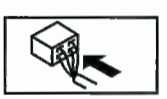

Diagnostic procedure

STEP	INSPECTION		ACTION
1	**VERIFY FREEZE FRAME DATA HAS BEEN RECORDED** • Has FREEZE FRAME DATA been recorded?	Yes	Go to the next step.
		No	Record FREEZE FRAME DATA on repair order, then go to the next step.
2	**VERIFY RELATED REPAIR INFORMATION AVAILABILITY** • Check for related Service bulletins and/or on-line repair information availability. • Is any repair information available?	Yes	Perform repair or diagnosis according to the available repair information. • If the vehicle is not repaired, go to the next step.
		No	Go to the next step.
3	**CLASSIFY INTERMITTENT CONCERN OR CONTINUOUS CONCERN** • Turn ignition switch to OFF, then start engine. • Is same DTC present?	Yes	Go to the next step.
		No	Intermittent concern exists. Go to "INTERMITTENT CONCERNS TROUBLESHOOTING". (See 01–03C–5 INTERMITTENT CONCERN TROUBLESHOOTING [AJ].)
4	**CLASSIFY OPEN CIRCUIT OR SHORT TO GROUND MALFUNCTION** • Disconnect purge solenoid valve tube that is connected to intake manifold. • Connect vacuum pump to purge solenoid valve. • Pump vacuum pump several times and stop. • Wait **a few seconds**. • Is vacuum maintained?	Yes	Go to Step 6.
		No	Go to the next step.
5	**INSPECT PASSAGE CONTROL OF PURGE SOLENOID VALVE** • Turn the ignition switch off. • Disconnect purge solenoid valve connector. • Pump vacuum pump several times and wait **a few seconds**. • Is vacuum maintained?	Yes	Repair or replace the following harness for short to ground, then go to Step 12. — Purge solenoid valve terminal B to PCM terminal 1BF
		No	Replace purge solenoid valve, then go to Step 12.
6	**INSPECT PURGE SOLENOID VALVE CONNECTOR FOR POOR CONNECTION** • Turn the ignition switch off. • Disconnect purge solenoid valve connector. • Check for poor connection (such as damaged, pulled-out pins, and corrosion). • Is there any malfunction?	Yes	Repair or replace the terminal, then go to Step 12.
		No	Go to the next step.
7	**INSPECT PURGE SOLENOID VALVE POWER CIRCUIT FOR OPEN CIRCUIT** • Turn the ignition switch off. • Measure voltage between purge solenoid valve terminal A and body ground. • Is voltage **B+**?	Yes	Go to the next step.
		No	Repair or replace harness for open circuit, then go to Step 12.
8	**INSPECT PURGE SOLENOID VALVE CONTROL CIRCUIT FOR SHORT TO POWER** • Turn the ignition switch off. • Measure voltage between purge solenoid valve terminal B and body ground. • Is voltage reading?	Yes	Repair or replace harness for short to power, then go to Step 12.
		No	Go to the next step.
9	**INSPECT PURGE SOLENOID VALVE** • Inspect purge solenoid valve. (See 01–16A–13 PURGE SOLENOID VALVE INSPECTION [L3, AJ].) • Is there any malfunction?	Yes	Replace purge solenoid valve, then go to Step 12.
		No	Go to the next step.
10	**INSPECT PCM CONNECTOR FOR POOR CONNECTION** • Turn the ignition switch off. • Disconnect PCM connector. • Check for poor connection (such as damaged, pulled-out pins, and corrosion). • Is there any malfunction?	Yes	Repair or replace the terminal, then go to Step 12.
		No	Go to the next step.

STEP	INSPECTION		ACTION
11	**INSPECT PURGE SOLENOID VALVE CONTROL CIRCUIT FOR OPEN CIRCUIT** • Turn the ignition switch off. • Check continuity between purge solenoid valve terminal B and PCM terminal 1BF. • Is there continuity?	Yes	Go to the next step.
		No	Repair or replace harness for open circuit, then go to the next step.
12	**VERIFY TROUBLESHOOTING OF DTC P0443 COMPLETED** • Make sure to reconnect all disconnected connectors. • Clear DTC from PCM memory using WDS or equivalent. • Perform the KOEO or KOER SELF TEST using the WDS or equivalent. (See 01–02C–8 KOEO/KOER SELF TEST [AJ].) • Is the PENDING CODE same DTC present?	Yes	Replace PCM, then go to the next step. (See 01–40C–5 PCM REMOVAL/INSTALLATION [AJ].)
		No	Go to the next step.
13	**VERIFY AFTER REPAIR PROCEDURE** • Perform "AFTER REPAIR PROCEDURE". (See 01–02C–7 AFTER REPAIR PROCEDURE [AJ].) • Are any DTCs present?	Yes	Go to the applicable DTC inspection. (See 01–02C–13 DTC TABLE [AJ].)
		No	Troubleshooting completed.

DTC P0446 [AJ]

E6U010200000W61

DTC P0446	Change over valve (EVAP system leak detection pump) stuck close
DETECTION CONDITION	• The PCM monitors the pump load current (EVAP line pressure), while the EVAP leak monitor is operating. When the decrease in pump load current is less than the specification after the reference current value has been obtained, the PCM determines that the change over valve in the EVAP system leak detection pump has a malfunction. **Diagnostic support note** • This is an intermittent monitor (CCM). • MIL illuminates if the PCM detects the above malfunction condition in two consecutive drive cycles or in one drive cycle while the DTC for the same malfunction has been stored in the PCM. • PENDING CODE is available if the PCM detects the above malfunction condition during the first drive cycle. • FREEZE FRAME DATA is available. • DTC is stored in the PCM memory.
POSSIBLE CAUSE	• Damaged change over valve (in EVAP system leak detection pump) • Short to power circuit between EVAP system leak detection pump terminal C and PCM terminal 1BA • PCM malfunction

Diagnostic procedure

STEP	INSPECTION		ACTION
1	**VERIFY FREEZE FRAME DATA AND DIAGNOSTIC MONITORING TEST RESULTS HAVE BEEN RECORDED** • Have FREEZE FRAME DATA and DIAGNOSTIC MONITORING TEST RESULTS (EVAP related) been recorded?	Yes	Go to the next step.
		No	Record FREEZE FRAME DATA and DIAGNOSTIC MONITORING TEST RESULTS on repair order, then go to the next step.
2	**VERIFY RELATED REPAIR INFORMATION AVAILABILITY** • Check for related Service Bulletins and/or on-line repair information availability. • Is any related repair information available?	Yes	Perform repair or diagnostic according to the available repair information. • If the vehicle is not repaired, then go to the next step.
		No	Go to the next step.
3	**INSPECT EVAP SYSTEM LEAK DETECTION PUMP CONTROL CIRCUIT FOR SHORT TO POWER** • Turn ignition switch to ON (Engine off). • Disconnect EVAP system leak detection pump connector. • Measure voltage between EVAP system leak detection pump terminal C and body ground. • Is voltage **B+**?	Yes	Repair or replace harness for short to power, then go to Step 5.
		No	Go to the next step.
4	**INSPECT CHANGE OVER VALVE (IN EVAP SYSTEM LEAK DETECTION PUMP)** • Perform EVAP system leak detection pump inspection. (See 01–16A–11 EVAPORATIVE EMISSION (EVAP) SYSTEM LEAK DETECTION PUMP INSPECTION [L3, AJ].) • Is there any malfunction?	Yes	Replace EVAP system leak detection pump, then go to the next step. (See 01–16A–5 EVAPORATIVE EMISSION (EVAP) CONTROL SYSTEM COMPONENT REMOVAL/ INSTALLATION [L3, AJ].)
		No	Go to the next step.
5	**VERIFY TROUBLESHOOTING OF DTC P0446 COMPLETED** • Make sure to reconnect all disconnected connectors. • Clear DTC from PCM memory using WDS or equivalent. • Perform the KOER SELF TEST using the WDS or equivalent. (See 01–02C–8 KOEO/KOER SELF TEST [AJ].) • Is the PENDING CODE same DTC present?	Yes	Replace PCM, then go to the next step. (See 01–40C–5 PCM REMOVAL/INSTALLATION [AJ].)
		No	Go to the next step.
6	**VERIFY AFTER REPAIR PROCEDURE** • Perform "AFTER REPAIR PROCEDURE". (See 01–02C–7 AFTER REPAIR PROCEDURE [AJ].) • Are any DTCs present?	Yes	Go to the applicable DTC inspection. (See 01–02C–13 DTC TABLE [AJ].)
		No	Troubleshooting completed.

DTC P0455 [AJ]

E6U010200000W62

DTC P0455	EVAP control system leak detected (large leak)
DETECTION CONDITION	• The PCM measures the pump load current (EVAP line pressure) when a certain period has passed after the EVAP system is sealed when the following monitoring conditions are met. If the load does not reach th reference current value within a certain period, the PCM determines that the EVAP system has a large leak. **MONITORING CONDITION** — Ignition switch OFF — IAT: **5—35 °C {40—95 °F}** — Battery voltage: **11 V or above** — Atmospheric pressure: **72.2 kPa {542 mmHg, 21.3 inHg} or above** — Fuel tank level: **15—85%** **Diagnostic support note** • This is an intermittent monitor (EVAP). • MIL illuminates if the PCM detects the above malfunction condition in two consecutive drive cycles or in one drive cycle while the DTC for the same malfunction has been stored in the PCM. • PENDING CODE is available if the PCM detects the above malfunction condition during the first drive cycle. • DIAGNOSTIC MONITORING TEST RESULTS is available. • FREEZE FRAME DATA is available. • DTC is stored in the PCM memory.
POSSIBLE CAUSE	• Loose, missing or defective fuel filler cap • Purge solenoid valve malfunction • EVAP system leak detection pump malfunction • EVAP hose damaged or loose • Fuel tank malfunction • Charcoal canister malfunction • Poor connection or damaged vacuum hose • PCM malfunction

Diagnostic procedure

STEP	INSPECTION		ACTION
1	**VERIFY FREEZE FRAME DATA AND DIAGNOSTIC MONITORING TEST RESULTS HAVE BEEN RECORDED** • Have FREEZE FRAME DATA and DIAGNOSTIC MONITORING TEST RESULTS (EVAP related) been recorded?	Yes	Go to the next step.
		No	Record FREEZE FRAME DATA and DIAGNOSTIC MONITORING TEST RESULTS on repair order, then go to the next step.
2	**VERIFY RELATED REPAIR INFORMATION AVAILABILITY** • Check for related Service Bulletins and/or on-line repair information availability. • Is any related repair information available?	Yes	Perform repair or diagnosis according to the available repair information. • If the vehicle is not repaired, go to the next step.
		No	Go to the next step.
3	**VERIFY RELATED PENDING CODE OR STORED DTCs** • Turn ignition switch to OFF then ON (Engine off). • Verify related pending code or stored DTCs. • Is DTC P0443 or P0446 or both present?	Yes	Go to appropriate DTC troubleshooting procedure. (See 01–02C–13 DTC TABLE [AJ].)
		No	Go to the next step.
4	**CLASSIFY INTERMITTENT CONCERN OR CONTINUOUS CONCERN** • Perform EVAP System Leak Inspection. (See 01–03C–70 Evaporative Emission (EVAP) System Leak Inspection.) • Does it fail test?	Yes	Intermittent concern exists. Inspect purge solenoid valve and EVAP system leak detection pump circuit for intermittent concern. (See 01–03C–5 INTERMITTENT CONCERN TROUBLESHOOTING [AJ].)
		No	Go to the next step.
5	**INSPECT FUEL FILLER CAP** **Note** • When fuel-filler caps other than OEM caps are attached, it is considered a malfunction. • Verify that fuel-filler cap is neither disconnected nor loose or damaged. • It is normal?	Yes	Go to the next step.
		No	Retighten fuel-filler cap or replace it, if it is damaged. Go to Step 17.

STEP	INSPECTION		ACTION
6	**INSPECT PURGE SOLENOID VALVE** • Inspect purge solenoid valve. (See 01–16A–13 PURGE SOLENOID VALVE INSPECTION [L3, AJ].) • Is there any malfunction?	Yes	Go to the next step.
		No	Replace purge solenoid valve, then go to Step 17.
7	**INSPECT CHANGE OVER VALVE (IN EVAP SYSTEM LEAK DETECTION PUMP)** • Perform EVAP system leak detection pump inspection. (See 01–16A–11 EVAPORATIVE EMISSION (EVAP) SYSTEM LEAK DETECTION PUMP INSPECTION [L3, AJ].) • Is there any malfunction?	Yes	Replace EVAP system leak detection pump, then go to Step 18. (See 01–16A–5 EVAPORATIVE EMISSION (EVAP) CONTROL SYSTEM COMPONENT REMOVAL/ INSTALLATION [L3, AJ].)
		No	Go to the next step.
8	**INSPECT IF EVAP CONTROL SYSTEM FOR LEAKAGE OR BLOCKAGE** **Note** • If EVAP tester is not available, then go to the next step. • Perform EVAP System Leak Inspection. (See 01–03C–70 Evaporative Emission (EVAP) System Leak Inspection.) • Is system test normal?	Yes	Go to the next step.
		No	Repair or replace faulty area, then go to Step 17.
9	**INSPECT CHARCOAL CANISTER TO FUEL PUMP FOR LEAKAGE** • Disconnect fuel tank side vacuum hose at charcoal canister. • Apply vacuum **1.7 kPa (13 mmHg, 0.5 inHg}** to disconnected vacuum hose using vacuum hose. • Does vacuum hold for minimum of **2 min**?	Yes	Go to Step 13.
		No	Go to the next step.
10	**VERIFY VACUUM HOSE FOR POOR CONNECTION** • Verify vacuum hose installation condition between fuel tank and charcoal canister. • Is there poor connection detected?.	Yes	Connect vacuum hose correctly, then go to Step 17.
		No	Go to the next step.
11	**INSPECT FUEL PUMP UNIT INSTALLATION** • Remove fuel tank. (See 01–14A–10 FUEL TANK REMOVAL/ INSTALLATION [L3, AJ].) • Visually inspect for damage, insufficient sealing or poorly installed pump unit. • Is it normal?	Yes	Go to the next step.
		No	Repair or replace fuel tank or sealing, then go to the next step.
12	**INSPECT FUEL TANK** • Inspect fuel tank. • Is it normal?	Yes	Replace vacuum hose from charcoal canister to fuel tank, then go to the next step.
		No	Replace fuel tank, then go to the next step. (See 01–14A–10 FUEL TANK REMOVAL/INSTALLATION [L3, AJ].)
13	**INSPECT LEAKAGE FROM CHARCOAL CANISTER TO PURGE SOLENOID VALVE** • Disconnect purge solenoid valve side vacuum hose to at charcoal canister. • Apply vacuum **3.3 kPa {25 mmHg, 1.0 inHg}** to disconnected vacuum hose using vacuum hose. • Does vacuum hold for minimum of **2 min**?	Yes	Go to Step 17.
		No	Go to the next step.
14	**VERIFY VACUUM HOSE FOR POOR CONNECTION** • Verify vacuum hose installation condition between purge solenoid valve and charcoal canister. • Is there poor connection detected?	Yes	Connect vacuum hose correctly, then go to Step 17.
		No	Go to the next step.

STEP	INSPECTION		ACTION
15	**INSPECT PURGE SOLENOID VALVE FOR DAMAGE OR AIR LEAK** • Remove purge solenoid valve and inspect for damage and air leak. • Is it normal?	Yes	Go to the next step.
		No	Replace purge solenoid valve, then go to Step 17.
16	**INSPECT CHARCOAL CANISTER** • Remove charcoal canister and inspect for plugging, damage or pinhole. • Is it normal?	Yes	Replace vacuum hose from charcoal canister to purge solenoid valve, then go to the next step.
		No	Replace charcoal canister, then go to the next step.
17	**PERFORM LEAK INSPECTION** • Connect all disconnected connectors. • Perform EVAP System Leak Inspection. (See 01–03C–70 Evaporative Emission (EVAP) System Leak Inspection.) • Does it fail test?	Yes	Leakage still exists. Locate leak point and repair. Then go to the next step.
		No	Go to the next step.
18	**VERIFY TROUBLESHOOTING OF DTC P0455 COMPLETED** • Make sure to reconnect all disconnected connectors. • Clear DTC from PCM memory using WDS or equivalent. • Perform the KOER SELF TEST using the WDS or equivalent. (See 01–02C–8 KOEO/KOER SELF TEST [AJ].) • Is the PENDING CODE same DTC present?	Yes	Replace PCM, then go to the next step. (See 01–40C–5 PCM REMOVAL/INSTALLATION [AJ].)
		No	Go to the next step.
19	**VERIFY AFTER REPAIR PROCEDURE** • Perform "AFTER REPAIR PROCEDURE". (See 01–02C–7 AFTER REPAIR PROCEDURE [AJ].) • Are any DTCs present?	Yes	Go to the applicable DTC inspection. (See 01–02C–13 DTC TABLE [AJ].)
		No	Troubleshooting completed.

DTC P0456 [AJ]

E6U010200000W63

DTC P0456	EVAP control system leak detected (very small leak)
DETECTION CONDITION	• The PCM measures the pump load current (EVAP line pressure) when a certain period has passed after the EVAP system is sealed when monitoring condition are met. If the load does not reach the reference load value or a rate of load increase lower than specified within a certain period, the PCM determines that the EVAP system has a very small leak. **MONITORING CONDITION** — Ignition switch OFF — IAT: **5—35 °C {40—95 °F}** — Battery voltage: **11 V or above** — Atmospheric pressure: **72.2 kPa {542 mmHg, 21.3 inHg} or above** — Fuel tank level: **15—85%** **Diagnostic support note** • This is an intermittent monitor (EVAP). • MIL illuminates if the PCM detects the above malfunction condition in two consecutive drive cycles or in one drive cycle while the DTC for the same malfunction has been stored in the PCM. • PENDING CODE is available if the PCM detects the above malfunction condition during the first drive cycle. • FREEZE FRAME DATA is available. • DTC is stored in the PCM memory.
POSSIBLE CAUSE	• EVAP pipe damaged • Purge solenoid valve malfunction • EVAP system leak detection pump malfunction • Fuel pump unit poor seal • EVAP hose damaged or loose • Charcoal canister malfunction • Fuel cap malfunction • Fuel tank malfunction • PCM malfunction

Diagnostic procedure

STEP	INSPECTION		ACTION
1	**VERIFY FREEZE FRAME DATA AND DIAGNOSTIC MONITORING TEST RESULTS HAVE BEEN RECORDED** • Have FREEZE FRAME DATA and DIAGNOSTIC MONITORING TEST RESULTS (EVAP related) been recorded?	Yes	Go to the next step.
		No	Record FREEZE FRAME DATA and DIAGNOSTIC MONITORING TEST RESULTS on repair order, then go to the next step.
2	**VERIFY RELATED REPAIR INFORMATION AVAILABILITY** • Check for related Service Bulletins and/or on-line repair information availability. • Is any related repair information available?	Yes	Perform repair or diagnosis according to the available repair information. • If the vehicle is not repaired, go to the next step.
		No	Go to the next step.
3	**VERIFY RELATED PENDING CODE OR STORED DTCs** • Turn ignition switch to OFF then ON (Engine off). • Verify related pending code or stored DTCs. • Is other DTC present?	Yes	Go to appropriate DTC inspection. (See 01–02C–13 DTC TABLE [AJ].)
		No	Go to the next step.
4	**CLASSIFY INTERMITTENT CONCERN OR CONTINUOUS CONCERN** • Perform EVAP system leak inspection. (See 01–03C–70 Evaporative Emission (EVAP) System Leak Inspection.) • Does it fail test?	Yes	Go to the next step.
		No	Intermittent concern exists. Inspect purge solenoid valve and EVAP system leak detection pump circuit for intermittent concern. (See 01–03C–5 INTERMITTENT CONCERN TROUBLESHOOTING [AJ].)
5	**LOCATE LEAK POINT** • Check leakage for the following using EVAP system tester: — Charcoal canister — Fuel filler cap — EVAP hoses and pipes — Fuel tank • Is leakage found?	Yes	Repair leakage or replace part, then go to Step 10.
		No	Go to the next step.
6	**INSPECT PURGE SOLENOID VALVE** • Inspect purge solenoid valve. (See 01–16A–13 PURGE SOLENOID VALVE INSPECTION [L3, AJ].) • Is there any malfunction?	Yes	Go to the next step.
		No	Replace purge solenoid valve, then go to Step 10.
7	**INSPECT EVAP SYSTEM LEAK DETECTION PUMP** • Connect all disconnected connectors and hoses. • Place clamp on EVAP system leak detection pump hose between EVAP system leak detection pump and air filter. • Perform EVAP system leak inspection. (See 01–03C–70 Evaporative Emission (EVAP) System Leak Inspection.) • Does it fail test?	Yes	Go to Step 9.
		No	Go to the next step.
8	**CONFIRM EVAP SYSTEM LEAK DETECTION PUMP LEAKAGE** • Remove clamp. • Perform EVAP system leak inspection. (See 01–03C–70 Evaporative Emission (EVAP) System Leak Inspection.) • Does it fail test?	Yes	Replace EVAP system leak detection pump, then go to Step 10. (See 01–16A–5 EVAPORATIVE EMISSION (EVAP) CONTROL SYSTEM COMPONENT REMOVAL/ INSTALLATION [L3, AJ].)
		No	Go to the next step.
9	**INSPECT FUEL PUMP UNIT INSTALLATION** • Remove fuel tank. (See 01–14A–10 FUEL TANK REMOVAL/ INSTALLATION [L3, AJ].) • Visually inspect for damage, insufficient sealing or poorly installed pump unit. • Is it normal?	Yes	Go to the next step.
		No	Repair or replace fuel tank or sealing, then go to the next step.
10	**PERFORM LEAK INSPECTION** • Connect all disconnected connectors and hoses. • Perform EVAP system leak inspection. (See 01–03C–70 Evaporative Emission (EVAP) System Leak Inspection.) • Is test result failed?	Yes	Leakage still exists. Locate leak point and repair. Then go to the next step.
		No	Go to the next step.

STEP	INSPECTION		ACTION
11	**VERIFY TROUBLESHOOTING OF DTC P0456 COMPLETED** • Make sure to reconnect all disconnected connectors. • Clear DTC from PCM memory using WDS or equivalent. • Perform the KOER SELF TEST using the WDS or equivalent. (See 01–02C–8 KOEO/KOER SELF TEST [AJ].) • Is the PENDING CODE same DTC present?	Yes	Replace PCM, then go to the next step. (See 01–40C–5 PCM REMOVAL/INSTALLATION [AJ].)
		No	Go to the next step.
12	**VERIFY AFTER REPAIR PROCEDURE** • Perform "AFTER REPAIR PROCEDURE". (See 01–02C–7 AFTER REPAIR PROCEDURE [AJ].) • Are any DTCs present?	Yes	Go to the applicable DTC inspection. (See 01–02C–13 DTC TABLE [AJ].)
		No	Troubleshooting completed.

DTC P0461 [AJ]

E6U010200000W64

DTC P0461	Fuel gauge sender unit circuit range/performance
DETECTION CONDITION	• The PCM monitors the fuel level difference before and after the PCM-calculated fuel consumption has reached **more than 25.0 L {26.4 US qt., 22.0 Imp qt.}**. If the difference **less than 5%**, the PCM determines that there is the fuel gauge sender unit range/performance problem. **Diagnostic support note** • This is a continuous monitor (CCM). • MIL illuminates if the PCM detects the above malfunction condition in two consecutive drive cycles or in one drive cycle while the DTC for the same malfunction has been stored in the PCM. • PENDING CODE is available if the PCM detects the above malfunction condition during the first drive cycle. • FREEZE FRAME DATA is available. • DTC is stored in the PCM memory.
POSSIBLE CAUSE	• Fuel gauge sender unit malfunction • Instrument cluster malfunction • PCM malfunction

Diagnostic procedure

STEP	INSPECTION		ACTION
1	**VERIFY FREEZE FRAME DATA HAS BEEN RECORDED** • Has FREEZE FRAME DATA been recorded?	Yes	Go to the next step.
		No	Record FREEZE FRAME DATA on repair order, then go to the next step.
2	**VERIFY RELATED REPAIR INFORMATION AVAILABILITY** • Check for related Service Bulletins and/or on-line repair information availability. • Is any related repair information available?	Yes	Perform repair or diagnosis according to the available repair information. • If the vehicle is not repaired, go to the next step.
		No	Go to the next step.
3	**INSPECT INSTRUMENT CLUSTER** • Turn the ignition switch off. • Inspect instrument cluster. (See 09–22–5 INSTRUMENT CLUSTER INSPECTION.) • Is instrument cluster normal?	Yes	Go to the next step.
		No	Replace instrument cluster, then go to the next step. (See 09–22–3 INSTRUMENT CLUSTER REMOVAL/INSTALLATION.)
4	**INSPECT FUEL GAUGE SENDER UNIT** • Turn the ignition switch off. • Inspect fuel gauge sender unit. (See 09–22–23 FUEL GAUGE SENDER UNIT INSPECTION [EXCEPT AWD].) • Is fuel gauge sender unit normal?	Yes	Replace PCM, then go to the next step. (See 01–40C–5 PCM REMOVAL/INSTALLATION [AJ].)
		No	Repair or replace fuel gauge sender unit, then go to the next step.
5	**VERIFY AFTER REPAIR PROCEDURE** • Perform "AFTER REPAIR PROCEDURE". (See 01–02C–7 AFTER REPAIR PROCEDURE [AJ].) • Are any DTCs present?	Yes	Go to the applicable DTC inspection. (See 01–02C–13 DTC TABLE [AJ].)
		No	Troubleshooting completed.

DTC P0462 [AJ]

E6U010200000W65

DTC P0462	Fuel gauge sender unit circuit low input
DETECTION CONDITION	• The PCM monitors the fuel level signal and fuel gauge sender unit output voltage from the instrument cluster. If the PCM detects a fuel level or fuel gauge sender unit output voltage that is too low, the PCM determines that the fuel gauge sender unit circuit has a malfunction. **Diagnostic support note** • This is a continuous monitor (CCM). • MIL illuminates if the PCM detects the above malfunction condition in two consecutive drive cycles or in one drive cycle while the DTC for the same malfunction has been stored in the PCM. • PENDING CODE is available if the PCM detects the above malfunction condition during the first drive cycle. • FREEZE FRAME DATA is available. • DTC is stored in the PCM memory.
POSSIBLE CAUSE	• Fuel gauge sender unit malfunction • Instrument cluster malfunction • PCM malfunction

Diagnostic procedure

STEP	INSPECTION		ACTION
1	**VERIFY FREEZE FRAME DATA HAS BEEN RECORDED** • Has FREEZE FRAME DATA been recorded?	Yes	Go to the next step.
		No	Record FREEZE FRAME DATA on repair order, then go to the next step.
2	**VERIFY RELATED REPAIR INFORMATION AVAILABILITY** • Check for related Service Bulletins and/or on-line repair information availability. • Is any related repair information available?	Yes	Perform repair or diagnosis according to the available repair information. • If the vehicle is not repaired, go to the next step.
		No	Go to the next step.
3	**INSPECT INSTRUMENT CLUSTER** • Perform "INSTRUMENT CLUSTER INPUT/OUTPUT CHECK MODE" procedure. (See 09–22–7 INSTRUMENT CLUSTER INPUT/OUTPUT CHECK MODE.) • Is there any malfunction?	Yes	Repair or replace suspected malfunction, then go to the next step.
		No	Go to the next step.
4	**VERIFY TROUBLESHOOTING OF DTC P0462 COMPLETED** • Make sure to reconnect all disconnected connectors. • Clear DTC from PCM memory using WDS or equivalent. • Perform the KOEO or KOER SELF TEST using the WDS or equivalent. (See 01–02C–8 KOEO/KOER SELF TEST [AJ].) • Is the PENDING CODE same DTC present?	Yes	Replace PCM, then go to the next step. (See 01–40C–5 PCM REMOVAL/INSTALLATION [AJ].)
		No	Go to the next step.
5	**VERIFY AFTER REPAIR PROCEDURE** • Perform "AFTER REPAIR PROCEDURE". (See 01–02C–7 AFTER REPAIR PROCEDURE [AJ].) • Are any DTCs present?	Yes	Go to the applicable DTC inspection. (See 01–02C–13 DTC TABLE [AJ].)
		No	Troubleshooting completed.

DTC P0463 [AJ]

E6U010200000W66

DTC P0463	Fuel gauge sender unit circuit high input
DETECTION CONDITION	• The PCM monitors the fuel level signal and fuel gauge sender unit output voltage from the instrument cluster. If the PCM detects a fuel level or fuel gauge sender unit output voltage that is too high, the PCM determines that the fuel gauge sender unit circuit has a malfunction. **Diagnostic support note** • This is a continuous monitor (CCM). • MIL illuminates if the PCM detects the above malfunction condition in two consecutive drive cycles or in one drive cycle while the DTC for the same malfunction has been stored in the PCM. • PENDING CODE is available if the PCM detects the above malfunction condition during the first drive cycle. • FREEZE FRAME DATA is available. • DTC is stored in the PCM memory.
POSSIBLE CAUSE	• Fuel gauge sender unit malfunction • Instrument cluster malfunction • PCM malfunction

Diagnostic procedure

STEP	INSPECTION		ACTION
1	**VERIFY FREEZE FRAME DATA HAS BEEN RECORDED** • Has FREEZE FRAME DATA been recorded?	Yes	Go to the next step.
		No	Record FREEZE FRAME DATA on repair order, then go to the next step.
2	**VERIFY RELATED REPAIR INFORMATION AVAILABILITY** • Check for related Service Bulletins and/or on-line repair information availability. • Is any related repair information available?	Yes	Perform repair or diagnosis according to the available repair information. • If the vehicle is not repaired, go to the next step.
		No	Go to the next step.
3	**INSPECT INSTRUMENT CLUSTER** • Perform "INSTRUMENT CLUSTER INPUT/OUTPUT CHECK MODE" procedure. (See 09–22–7 INSTRUMENT CLUSTER INPUT/OUTPUT CHECK MODE.) • Is there any malfunction?	Yes	Repair or replace suspected malfunction, then go to the next step.
		No	Go to the next step.
4	**VERIFY TROUBLESHOOTING OF DTC P0463 COMPLETED** • Make sure to reconnect all disconnected connectors. • Clear DTC from PCM memory using WDS or equivalent. • Perform the KOEO or KOER SELF TEST using the WDS or equivalent. (See 01–02C–8 KOEO/KOER SELF TEST [AJ].) • Is the PENDING CODE same DTC present?	Yes	Replace PCM, then go to the next step. (See 01–40C–5 PCM REMOVAL/INSTALLATION [AJ].)
		No	Go to the next step.
5	**VERIFY AFTER REPAIR PROCEDURE** • Perform "AFTER REPAIR PROCEDURE". (See 01–02C–7 AFTER REPAIR PROCEDURE [AJ].) • Are any DTCs present?	Yes	Go to the applicable DTC inspection. (See 01–02C–13 DTC TABLE [AJ].)
		No	Troubleshooting completed.

DTC P0480 [AJ]

E6U010200000W67

DTC P0480	Fan control circuit malfunction
DETECTION CONDITION	• The PCM monitors the input voltages from the fan control module. If the voltage at PCM terminal 1U remains low or high, the PCM determines that the fan control circuit has a malfunction. **Diagnostic support note** • This is an continuous monitor (Other). • The MIL does not illuminate. • PENDING CODE is available if the PCM detects the above malfunction condition. • FREEZE FRAME DATA is not available. • DTC is stored in the PCM memory.
POSSIBLE CAUSE	• Fan control module malfunction • Connector or terminal malfunction • Open circuit between fan control module terminal 1B and PCM terminal 1U • Short to power circuit between fan control module terminal 1B and PCM terminal 1U • Short to ground circuit between fan control module terminal 1B and PCM terminal 1U • PCM malfunction

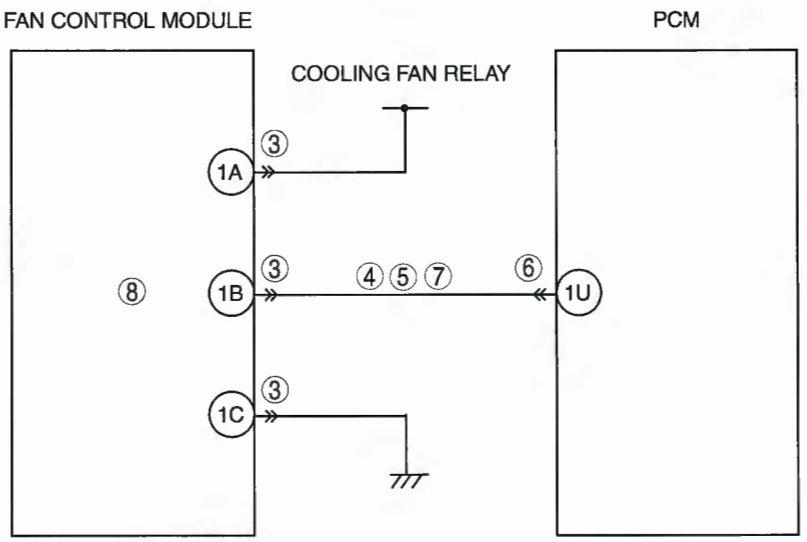

FAN CONTROL MODULE
HARNESS SIDE CONNECTOR

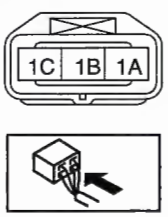

PCM
WIRING HARNESS-SIDE CONNECTOR

1BE	1BA	1AW	1AS	1AO	1AK	1AG	1AC	1Y	1U	1Q	1M	1I	1E	1A
1BF	1BB	1AX	1AT	1AP	1AL	1AH	1AD	1Z	1V	1R	1N	1J	1F	1B
1BG	1BC	1AY	1AU	1AQ	1AM	1AI	1AE	1AA	1W	1S	1O	1K	1G	1C
1BH	1BD	1AZ	1AV	1AR	1AN	1AJ	1AF	1AB	1X	1T	1P	1L	1H	1D

Diagnostic procedure

STEP	INSPECTION		ACTION
1	**VERIFY FREEZE FRAME DATA HAS BEEN RECORDED** • Has FREEZE FRAME DATA been recorded?	Yes	Go to the next step.
		No	Record FREEZE FRAME DATA on repair order, then go t the next step.
2	**VERIFY RELATED REPAIR INFORMATION AVAILABILITY** • Check for related Service Bulletins and/or on-line repair information availability. • Is any related repair information available?	Yes	Perform repair or diagnosis according to the available repair information. • If the vehicle is not repaired, go to the next step.
		No	Go to the next step.
3	**INSPECT FAN CONTROL MODULE CONNECTOR FOR POOR CONNECTION** • Turn the ignition switch off. • Disconnect fan control module connector. • Check for poor connection (such as damaged, pulled-out pins, and corrosion). • Is there malfunction?	Yes	Repair or replace the terminal, then go to Step 9.
		No	Go to the next step.
4	**INSPECT FAN CONTROL MODULE SIGNAL CIRCUIT FOR SHORT TO POWER** • Turn the ignition switch to the ON position. • Measure voltage between fan control module connector terminal 1B and body ground. • Is voltage **B+**?	Yes	Repair or replace harness for short to power, then go to Step 9.
		No	Go to the next step.
5	**INSPECT FAN CONTROL MODULE SIGNAL CIRCUIT FOR SHORT TO GROUND** • Turn the ignition switch off. • Check continuity between fan control module terminal 1B and body ground. • Is there continuity?	Yes	Repair or replace harness for short to ground, then go to Step 9.
		No	Go to the next step.
6	**INSPECT PCM CONNECTOR FOR POOR CONNECTION** • Turn the ignition switch off. • Disconnect PCM connector. • Check for poor connection (such as damaged, pulled-out pins, and corrosion). • Is there any malfunction?	Yes	Repair or replace the terminal, then go to Step 9.
		No	Go to the next step.
7	**INSPECT FAN CONTROL MODULE SIGNAL CIRCUIT FOR OPEN CIRCUIT** • Turn the ignition switch off. • Check continuity between fan control module terminal 1B and PCM terminal 1U. • Is there continuity?	Yes	Go to the next step.
		No	Repair or replace harness for open circuit, then go to Step 9.
8	**INSPECT FAN CONTROL MODULE** • Inspect fan control module. (See 01–12A–15 FAN CONTROL MODULE INSPECTION [AJ].) • Is there any malfunction?	Yes	Replace fan control module, then go to the next step.
		No	Go to the next step.
9	**VERIFY TROUBLESHOOTING OF DTC P0480 COMPLETED** • Make sure to reconnect all disconnected connectors. • Clear DTC from PCM memory using WDS or equivalent. • Perform the KOEO or KOER SELF TEST using the WDS or equivalent. (See 01–02C–8 KOEO/KOER SELF TEST [AJ].) • Is the PENDING CODE same DTC present?	Yes	Replace PCM, then go to the next step. (See 01–40C–5 PCM REMOVAL/INSTALLATION [AJ].)
		No	Go to the next step.
10	**VERIFY AFTER REPAIR PROCEDURE** • Perform "AFTER REPAIR PROCEDURE". (See 01–02C–7 AFTER REPAIR PROCEDURE [AJ].) • Are any DTCs present?	Yes	Go to the applicable DTC inspection. (See 01–02C–13 DTC TABLE [AJ].)
		No	Troubleshooting completed.

DTC P0500 [AJ]

E6U010200000W68

DTC P0500	VSS circuit malfunction
DETECTION CONDITION	**With ABS/TCS** • If an error in the wheel speed signal from the ABS/TCS HU/CM is detected by CAN when the following conditions are met, the PCM detects a malfunction in the vehicle speed signal. — In a shift range other than P, N or R position (ATX). — The neutral switch and clutch pedal position switch are OFF (MTX). — The load is **40% or above.** — The engine speed is **2,000 rpm or above**. — Brake switch is off **MTX without ABS/TCS** • The vehicle speed signal from the vehicle speed sensor is **3.7 km/h {2.3 mph} or below** when the following conditions are met: — The neutral switch and clutch pedal position switch are OFF. — The load is **40% or above**. — The engine speed is **2,000 rpm or above**. — Brake switch is off **Diagnostic support note** • This is a continuous monitor (CCM). • MIL illuminates if the PCM detects the above malfunction condition in two consecutive drive cycles or in one drive cycle while the DTC for the same malfunction has been stored in the PCM. • PENDING CODE is available if the PCM detects the above malfunction condition during the first drive cycle. • FREEZE FRAME DATA is available. • DTC is stored in PCM memory.
POSSIBLE CAUSE	**With ABS/TCS** • Front ABS wheel speed sensor malfunction • ABS/TCS HU/CM malfunction • Connector or terminal malfunction • PCM malfunction **MTX without ABS/TCS** • VSS malfunction • Connector or terminal malfunction • Short to ground circuit between VSS terminal A and PCM terminal 2V • Short to ground circuit between VSS terminal B and PCM terminal 2W • Short to power circuit between VSS terminal A and PCM terminal 2V • Short to power circuit between VSS terminal B and PCM terminal 2W • Open circuit between VSS terminal A and PCM terminal 2V • Open circuit between VSS terminal B and PCM terminal 2W • PCM malfunction

DTC P0500	VSS circuit malfunction

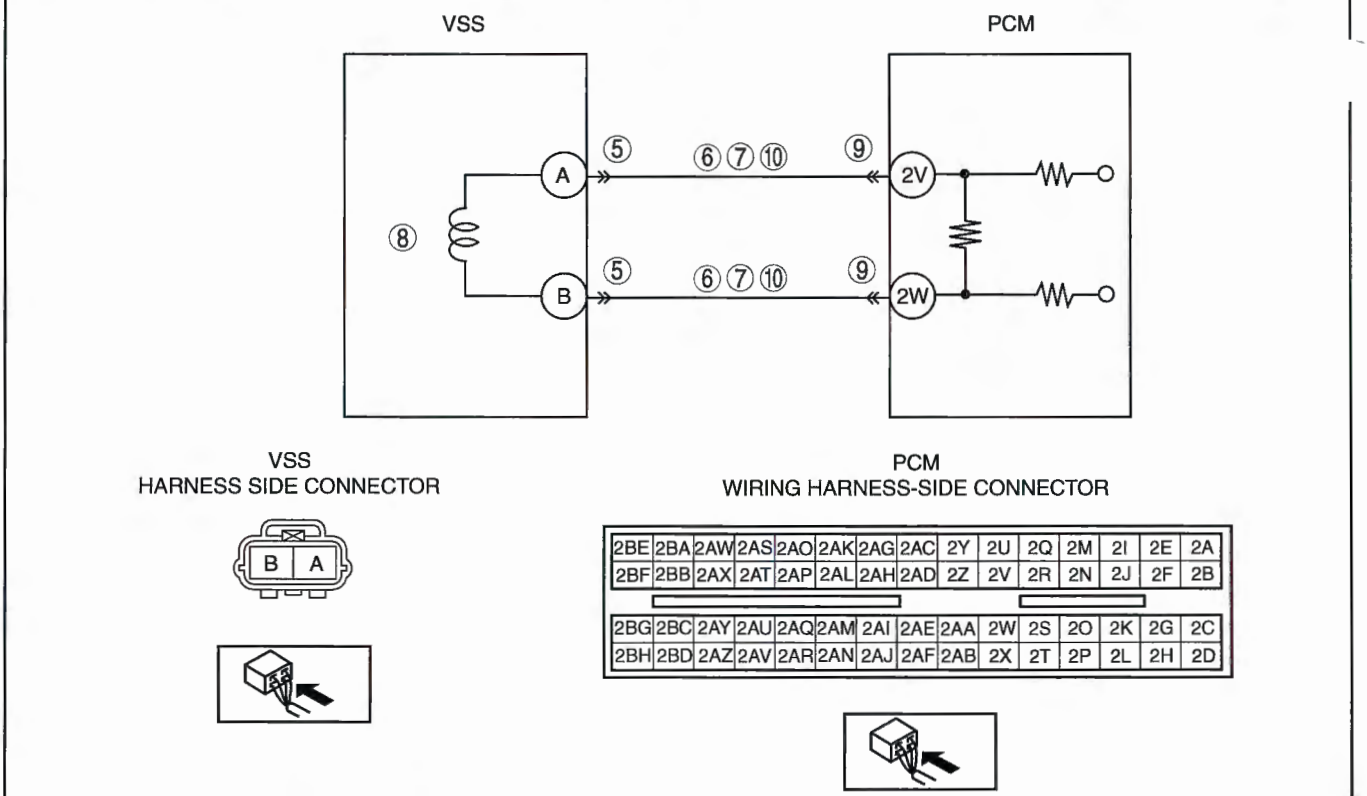

Diagnostic procedure

STEP	INSPECTION		ACTION
1	**VERIFY FREEZE FRAME DATA HAS BEEN RECORDED** • Has FREEZE FRAME DATA been recorded?	Yes	Go to the next step.
		No	Record FREEZE FRAME PID DATA on repair order, then go to the next step.
2	**VERIFY RELATED SERVICE INFORMATION AVAILABILITY** • Check for related Service Information availability. • Is any related Service Information available?	Yes	Perform repair or diagnosis according to available Service Information. • If the vehicle is not repaired, go to the next step.
		No	Go to the next step.
3	**VERIFY CURRENT INPUT SIGNAL STATUS-IS CONCERN INTERMITTENT OR CONSTANT** • Connect WDS or equivalent to DLC-2. • Start engine. • Access VSS PID using the WDS or equivalent. — Vehicle speed **20 km/h {12.4 mph}: 20km/h {12.4 mph}** — Vehicle speed **40 km/h {24.8 mph}: 40km/h {24.8 mph}** • Are PID readings within specification?	Yes	Intermittent concern exists. Go to "INTERMITTENT CONCERNS TROUBLESHOOTING". (See 01–03C–5 INTERMITTENT CONCERN TROUBLESHOOTING [AJ].)
		No	Go to the next step.
4	**VERIFY VEHICLE TYPE** • Verify the vehicle type. • Is the vehicle MTX without ABS/TCS?	Yes	Go to the next step.
		No	**ATX without ABS/TCS** • Go to the applicable DTC inspection. (See 05–02B–5 DTC TABLE [AW6A-EL].) **With ABS/TCS** • Go to the applicable DTC inspection. (See 04–02A–2 ABS/TCS ON-BOARD DIAGNOSIS.)
5	**INSPECT VSS CONNECTOR FOR POOR CONNECTION** • Turn the ignition switch off. • Disconnect VSS connector. • Check for poor connection (such as damaged, pulled-out pins, and corrosion, etc.). • Is there any malfunction?	Yes	Repair or replace the terminal, then go to Step 11.
		No	Go to the next step.

STEP	INSPECTION		ACTION
6	**INSPECT VSS CIRCUIT FOR SHORT TO GROUND** • Turn the ignition switch off. • Check continuity between the following circuits: — VSS terminal A and body ground — VSS terminal B and body ground • Is there continuity?	Yes	Repair or replace harness for short to ground, then go to Step 11.
		No	Go to the next step.
7	**INSPECT VSS CIRCUIT FOR SHORT TO POWER** • Turn the ignition switch off. • Disconnect VSS connector. • Measure voltage between the following circuits: — VSS terminal A and body ground — VSS terminal B and body ground • Is voltage reading?	Yes	Repair or replace harness for short to power, then go to Step 11.
		No	Go to the next step.
8	**INSPECT VSS** • Inspect VSS. (See 05–15B–5 VEHICLE SPEED SENSOR INSPECTION (WITHOUT ABS) [A65M-R].) • Is there any malfunction?	Yes	Replace VSS, then go to Step 11. (See 05–15B–4 VEHICLE SPEED SENSOR REMOVAL/INSTALLATION (WITHOUT ABS) [A65M-R].)
		No	Go to the next step.
9	**INSPECT PCM CONNECTOR FOR POOR CONNECTION** • Turn the ignition switch off. • Disconnect PCM connector. • Check for poor connection (such as damaged, pulled-out pins, and corrosion). • Is there any malfunction?	Yes	Repair or replace the terminal, then go to Step 11.
		No	Go to the next step.
10	**INSPECT VSS CIRCUIT FOR OPEN CIRCUIT** • Turn the ignition switch off. • Check continuity between the following harnesses: — VSS terminal A and PCM terminal 2V — VSS terminal B and PCM terminal 2W • Is there continuity?	Yes	Go to the next step.
		No	Repair or replace harness for open circuit, then go to the next step.
11	**VERIFY TROUBLESHOOTING OF DTC P0500 COMPLETED** • Make sure to reconnect all disconnected connectors. • Turn the ignition switch to the ON position. • Clear the DTC from the PCM memory using the WDS or equivalent. • Warm-up engine. • Access RPM and LOAD PID using the WDS or equivalent. • Drive vehicle under following conditions for **18 s**. — Engine speed: **2,000 rpm or above** — Gear: Gear is in other than NEUTRAL — Load: **40% or above** • Is PENDING CODE same as DTC present?	Yes	Replace PCM, then go to the next step. (See 01–40C–5 PCM REMOVAL/INSTALLATION [AJ].)
		No	Go to the next step.
12	**VERIFY AFTER REPAIR PROCEDURE** • Perform "AFTER REPAIR PROCEDURE". (See 01–02C–7 AFTER REPAIR PROCEDURE [AJ].) • Are any DTCs present?	Yes	Go to applicable DTC troubleshooting. (See 01–02C–13 DTC TABLE [AJ].)
		No	Troubleshooting completed.

DTC P0505 [AJ]

E6U010200000W69

DTC P0505	Idle control system malfunction
DETECTION CONDITION	• The PCM cannot control idle speed at the target idle speed during the KOER self test.
POSSIBLE CAUSE	• Electronic throttle control system malfunction • Air cleaner element clogged • Air intake passage clogged • A/C relay control circuit malfunction • Generator control circuit malfunction • Low engine compression (Over capacity of blow-by gas) • PCM malfunction

Diagnostic procedure

STEP	INSPECTION		ACTION
1	**VERIFY RELATED REPAIR INFORMATION AVAILABILITY** • Check for related Service Bulletins and/or on-line repair information availability. • Is any related repair information available?	Yes	Perform repair or diagnosis according to available repair Information. • If the vehicle is not repaired, go to the next step.
		No	Go to the next step.
2	**VERIFY RELATED PENDING OR STORED DTCs** • Turn ignition switch to OFF, then ON. (Engine off) • Verify pending code or stored DTCs using the WDS or equivalent. • Does DTC P0506, P0507, P2100, P2101, P2105, P2107, P2110, P2112 or P2119 present?	Yes	Perform applicable DTC inspection. (See 01–02C–13 DTC TABLE [AJ].)
		No	Go to the next step.
3	**INSPECT ELECTRONIC THROTTLE CONTROL SYSTEM OPERATION** • Perform electronic throttle control system operation inspection. (See 01–03C–66 Electronic Throttle Control Inspection.) • Does electronic throttle control system work properly?	Yes	Go to the next step.
		No	Repair or replace malfunctioning part according to electronic throttle control system operation inspection results, then go to Step 9.
4	**INSPECT A/C MAGNETIC CLUTCH OPERATION** **Note** • The following test should be performed for A/C. Go to the next step for vehicles without A/C. • Turn blower motor switch to off. • Is magnetic clutch still on?	Yes	Go to "A/C ALWAYS ON / A/C COMPRESSOR RUNS CONTINUOUSLY" of ENGINE SYMPTOM TROUBLESHOOTING, then go to step 9. (See 01–03C–54 NO.24 A/C ALWAYS ON/A/C COMPRESSOR RUNS CONTINUOUSLY [AJ].)
		No	Go to the next step.
5	**INSPECT GENERATOR CONTROL CIRCUIT MALFUNCTION** • Apply electrical load at idle. • Is engine speed increased?	Yes	Go to the next step.
		No	Repair short to power supply in generator control circuit, then go to Step 9.
6	**INSPECT AIR CLEANER ELEMENT** • remove air cleaner element with engine running. • Is engine speed increased?	Yes	Clean or replace air cleaner element, then go to Step 9.
		No	Go to the next step.
7	**INSPECT THROTTLE BODY PASSAGE** • Is throttle body clogged?	Yes	Clean or replace throttle body passage, then go to Step 9.
		No	Go to the next step.
8	**INSPECT ENGINE COMPRESSION** • Inspect engine compression. (See 01–10C–6 COMPRESSION INSPECTION [AJ].) • Is engine compression normal?	Yes	Go to the next step.
		No	Overhaul engine, then go to the next step.
9	**VERIFY TROUBLESHOOTING OF DTC P0505 COMPLETED** • Make sure to reconnect all disconnected connectors. • Clear DTC from PCM memory using WDS or equivalent. • Perform the KOER SELF TEST using the WDS or equivalent. (See 01–02C–8 KOEO/KOER SELF TEST [AJ].) • Is the PENDING CODE same DTC present?	Yes	Replace PCM, then go to the next step. (See 01–40C–5 PCM REMOVAL/INSTALLATION [AJ].)
		No	Go to the next step.
10	**VERIFY AFTER REPAIR PROCEDURE** • Perform "AFTER REPAIR PROCEDURE". (See 01–02C–7 AFTER REPAIR PROCEDURE [AJ].) • Are any DTCs present?	Yes	Go to the applicable DTC inspection. (See 01–02C–13 DTC TABLE [AJ].)
		No	Troubleshooting completed.

DTC P0506 [AJ]

E6U010200000W70

DTC P0506	Idle control system RPM lower than expected
DETECTION CONDITION	• The actual idle speed is lower than expected by **100 rpm** for **14 s** when the brake pedal is depressed (brake switch is ON) and the steering wheel is held straight ahead (power steering pressure switch is OFI **Note** • If the atmospheric pressure is **72.2 kPa {542 mmHg, 21.3 inHg} or below**, or the intake air temperature is **–10 °C {14 °F} or below**, the PCM cancels diagnosis of P0506. **Diagnostic support note** • This is a continuous monitor (CCM). • MIL illuminates if the PCM detects the above malfunction condition in two consecutive drive cycles or in one drive cycle while the DTC for the same malfunction has been stored in the PCM. • PENDING CODE is available if the PCM detects the above malfunction condition during the first drive cycle. • FREEZE FRAME DATA is available. • DTC is stored in PCM memory.
POSSIBLE CAUSE	• Electronic throttle control system malfunction • Air cleaner element clogged • Air intake passage clogged • A/C relay control circuit malfunction • Generator malfunction • Purge solenoid valve malfunction • Low engine compression (Over capacity of blow-by gas) • PCM malfunction

Diagnostic procedure

STEP	INSPECTION		ACTION
1	**VERIFY FREEZE FRAME DATA HAS BEEN RECORDED** • Has FREEZE FRAME DATA been recorded?	Yes	Go to the next step.
		No	Record FREEZE FRAME DATA on repair order, then go to the next step.
2	**VERIFY RELATED SERVICE INFORMATION AVAILABILITY** • Check for related Service Bulletins and/or on-line repair information availability. • Is any related repair information available?	Yes	Perform repair or diagnosis according to the available repair information. • If the vehicle is not repaired, then go to the next step.
		No	Go to the next step.
3	**VERIFY RELATED PENDING OR STORED DTCs** • Turn ignition switch to OFF, then ON (Engine off). • Verify pending code or stored DTCs using the WDS or equivalent. • Is other DTC present?	Yes	Repair applicable DTCs. (See 01–02C–13 DTC TABLE [AJ].)
		No	Go to the next step.
4	**INSPECT A/C MAGNET CLUTCH OPERATION** • Turn blower motor switch off. • Is magnet clutch still on?	Yes	Refer to "A/C is always on or A/C compressor runs continuously." of ENGINE SYMPTOM TROUBLESHOOTING, then go to Step 9. (See 01–03C–54 NO.24 A/C ALWAYS ON/A/C COMPRESSOR RUNS CONTINUOUSLY [AJ].)
		No	Go to the next step.
5	**INSPECT PURGE SOLENOID VALVE** • Inspect purge solenoid valve. (See 01–16A–13 PURGE SOLENOID VALVE INSPECTION [L3, AJ].) • Is there any malfunction?	Yes	Replace purge solenoid valve, then go to Step 9.
		No	Go to the next step.
6	**INSPECT AIR CLEANER ELEMENT** • Remove air cleaner element with engine running. • Is engine speed increased?	Yes	Replace air cleaner element, then go to Step 9.
		No	Go to the next step.
7	**INSPECT ENGINE COMPRESSION** • Inspect engine compression. (See 01–10C–6 COMPRESSION INSPECTION [AJ].) • Is engine compression normal?	Yes	Go to the next step.
		No	Overhaul engine, then go to Step 9.
8	**INSPECT GENERATOR** • Inspect generator. (See 01–17A–5 GENERATOR INSPECTION [L3, AJ].) • Is there any malfunction?	Yes	Replace generator, then go to the next step. (See 01–17A–4 GENERATOR REMOVAL/INSTALLATION [L3, AJ].)
		No	Go to the next step.
9	**VERIFY TROUBLESHOOTING OF DTC P0506 COMPLETED** • Make sure to reconnect all disconnected connectors. • Start engine. • Clear the DTC from the PCM memory using the WDS or equivalent. • Depress brake pedal for **14 s or more**. • Is PENDING CODE same as DTC present?	Yes	Replace PCM, then go to the next step. (See 01–40C–5 PCM REMOVAL/INSTALLATION [AJ].)
		No	Go to the next step.
10	**VERIFY AFTER REPAIR PROCEDURE** • Perform "AFTER REPAIR PROCEDURE". (See 01–02C–7 AFTER REPAIR PROCEDURE [AJ].) • Are any DTCs present?	Yes	Go to the applicable DTC inspection. (See 01–02C–13 DTC TABLE [AJ].)
		No	Troubleshooting completed.

DTC P0507 [AJ]

E6U010200000W71

DTC P0507	Idle control system RPM higher than expected
DETECTION CONDITION	• The actual idle speed is higher than expected by **200 rpm** for **14 s** when the brake pedal is depressed (brake switch is ON) and the steering wheel is held straight ahead (power steering pressure switch is OFI **Note** • If the atmospheric pressure is **72.2 kPa {542 mmHg, 21.3 inHg} or below,** or the intake air temperature is **–10 °C {14 °F} or below**, the PCM cancels diagnosis of P0507. **Diagnostic support note** • This is a continuous monitor (CCM). • MIL illuminates if the PCM detects the above malfunction condition in two consecutive drive cycles or in one drive cycle while the DTC for the same malfunction has been stored in the PCM. • PENDING CODE is available if the PCM detects the above malfunction condition during the first drive cycle. • FREEZE FRAME DATA is available. • DTC is stored in PCM memory.
POSSIBLE CAUSE	• Electronic throttle control system malfunction • Vacuum hose misconnection • PCM malfunction

Diagnostic procedure

STEP	INSPECTION		ACTION
1	**VERIFY FREEZE FRAME DATA HAS BEEN RECORDED** • Has FREEZE FRAME DATA been recorded?	Yes	Go to the next step.
		No	Record FREEZE FRAME DATA on repair order, then go to the next step.
2	**VERIFY RELATED SERVICE INFORMATION AVAILABILITY** • Check for related Service Bulletins and/or on-line repair information availability. • Is any related repair information available?	Yes	Perform repair or diagnosis according to the available repair information. • If the vehicle is not repaired, then go to the next step.
		No	Go to the next step.
3	**VERIFY RELATED PENDING OR STORED DTCs** • Turn ignition switch to OFF, then ON (Engine off). • Verify pending code or stored DTCs using the WDS or equivalent. • Is other DTC present?	Yes	Repair applicable DTCs. (See 01–02C–13 DTC TABLE [AJ].)
		No	Go to the next step.
4	**INSPECT VACUUM HOSE CONNECTION** • Are vacuum hoses connecting accurately? (See 01–13C–2 VACUUM HOSE ROUTING DIAGRAM [AJ].)	Yes	Go to the next step.
		No	Reconnect vacuum hose accurately, then go to the next step.
5	**VERIFY TROUBLESHOOTING OF DTC P0507 COMPLETED** • Make sure to reconnect all disconnected connectors. • Start engine. • Clear the DTC from the PCM memory using the WDS or equivalent. • Depress brake pedal for **14 s or more.** • Is PENDING CODE same as DTC present?	Yes	Replace PCM, then go to the next step. (See 01–40C–5 PCM REMOVAL/INSTALLATION [AJ].)
		No	Go to the next step.
6	**VERIFY AFTER REPAIR PROCEDURE** • Perform "AFTER REPAIR PROCEDURE". (See 01–02C–7 AFTER REPAIR PROCEDURE [AJ].) • Are any DTCs present?	Yes	Go to the applicable DTC inspection. (See 01–02C–13 DTC TABLE [AJ].)
		No	Troubleshooting completed.

DTC P0550 [AJ]

E6U010200000W72

DTC P0550	PSP switch circuit malfunction
DETECTION CONDITION	• The PCM monitors the PSP switch signal at PCM terminal 2T. If the input voltage is low (switch stays on) for **1 min** when the VSS is **60.2 km/h {37.4 mph} or above** and the ECT is **60 °C {140 °F} or above**, the PCM determines that the PSP switch circuit has a malfunction. **Diagnostic support note** • This is a continuous monitor (CCM). • MIL illuminates if the PCM detects the above malfunction condition in two consecutive drive cycles or in one drive cycle while the DTC for the same malfunction has been stored in the PCM. • PENDING CODE is available if the PCM detects the above malfunction condition during the first drive cycle. • FREEZE FRAME DATA is available. • DTC is stored in PCM memory.
POSSIBLE CAUSE	• PSP switch malfunction • Connector or terminal malfunction • Short to ground circuit between PSP switch terminal A and PCM terminal 2T • PCM malfunction

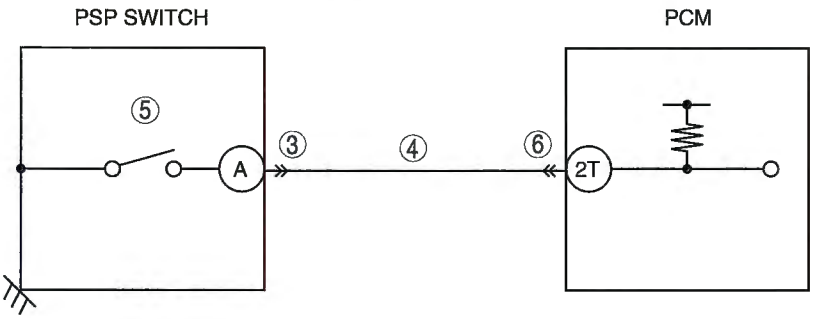

PSP SWITCH
HARNESS SIDE CONNECTOR

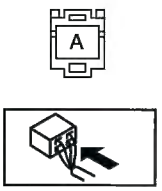

PCM
WIRING HARNESS-SIDE CONNECTOR

2BE	2BA	2AW	2AS	2AO	2AK	2AG	2AC	2Y	2U	2Q	2M	2I	2E	2A
2BF	2BB	2AX	2AT	2AP	2AL	2AH	2AD	2Z	2V	2R	2N	2J	2F	2B
2BG	2BC	2AY	2AU	2AQ	2AM	2AI	2AE	2AA	2W	2S	2O	2K	2G	2C
2BH	2BD	2AZ	2AV	2AR	2AN	2AJ	2AF	2AB	2X	2T	2P	2L	2H	2D

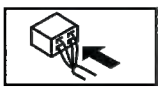

Diagnostic procedure

STEP	INSPECTION		ACTION
1	**VERIFY FREEZE FRAME DATA HAS BEEN RECORDED** • Has FREEZE FRAME DATA been recorded?	Yes	Go to the next step.
		No	Record FREEZE FRAME DATA on repair order, then go to the next step.
2	**VERIFY RELATED REPAIR INFORMATION AVAILABILITY** • Check for related Service Bulletins and/or on-line repair information availability. • Is any related repair information available?	Yes	Perform repair or diagnosis according to the available repair information. • If the vehicle is not repaired, go to the next step.
		No	Go to the next step.
3	**INSPECT PSP SWITCH CONNECTOR FOR POOR CONNECTION** • Turn the ignition switch off. • Disconnect PSP switch connector. • Check for poor connection (such as damaged, pulled-out pins, and corrosion, etc.). • Is there any malfunction?	Yes	Repair or replace the terminal, then go to Step 7.
		No	Go to the next step.
4	**INSPECT PSP SWITCH SIGNAL CIRCUIT FOR SHORT TO GROUND** • Turn the ignition switch off. • Check continuity between PSP switch terminal A and body ground. • Is there continuity?	Yes	Repair or replace harness for short to ground, then go to Step 7.
		No	Go to the next step.
5	**INSPECT PSP SWITCH** • Inspect PSP switch. (See 01–40C–25 POWER STEERING PRESSURE (PSP) SWITCH INSPECTION [AJ].) • Is there any malfunction?	Yes	Replace PSP switch, then go to Step 7. (See 06–12–32 POWER STEERING OIL PUMP DISASSEMBLY/ASSEMBLY [AJ].)
		No	Go to the next step.
6	**INSPECT PCM CONNECTOR FOR POOR CONNECTION** • Turn the ignition switch off. • Disconnect PCM connector. • Check for poor connection (such as damaged, pulled-out pins, and corrosion). • Is there any malfunction?	Yes	Repair or replace the terminal, then go to the next step.
		No	Go to the next step.
7	**VERIFY TROUBLESHOOTING OF DTC P0550 COMPLETED** • Make sure to reconnect all disconnected connectors. • Start engine. • Clear the DTC from the PCM memory using the WDS or equivalent. • Drive vehicle **60.2 km/h {37.4 mph} or above** for **1 min.** • Verify that ECT PID **60 °C {140 °F} or above** using the WDS or equivalent. • Is PENDING CODE same as DTC present?	Yes	Replace PCM, then go to the next step. (See 01–40C–5 PCM REMOVAL/INSTALLATION [AJ].)
		No	Go to the next step.
8	**VERIFY AFTER REPAIR PROCEDURE** • Perform "AFTER REPAIR PROCEDURE". (See 01–02C–7 AFTER REPAIR PROCEDURE [AJ].) • Are any DTCs present?	Yes	Go to the applicable DTC inspection. (See 01–02C–13 DTC TABLE [AJ].)
		No	Troubleshooting completed.

DTC P0564 [AJ]

E6U010200000W73

DTC P0564	Cruise control switch circuit malfunction
DETECTION CONDITION	• The PCM monitors the cruise control switch signal at PCM terminal 1AS. If the PCM detects that any one of following switches (Main, CANCEL, SET/COAST, RESUME/ACCEL) remains on for **2 min**, the PCM determines that the cruise control switch circuit has a malfunction. **Diagnostic support note** • This is a continuous monitor (Other). • The MIL does not illuminate. • FREEZE FRAME DATA is not available. • DTC is stored in PCM memory.
POSSIBLE CAUSE	• Cruise control switch malfunction • Connector or terminal malfunction • Short to power circuit between cruise control switch terminal B and PCM terminal 1AS • Short to ground circuit between cruise control switch terminal B and PCM terminal 1AS • Open circuit between cruise control switch terminal C and body ground • Open circuit between cruise control switch terminal B and PCM terminal 1AS • PCM malfunction

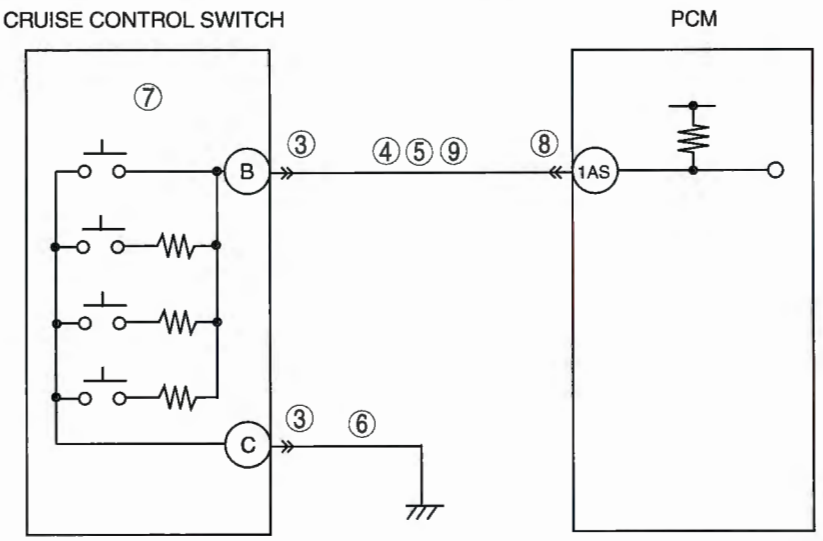

CRUISE CONTROL SWITCH
HARNESS SIDE CONNECTOR

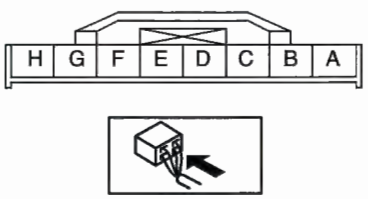

PCM
WIRING HARNESS-SIDE CONNECTOR

1BE	1BA	1AW	1AS	1AO	1AK	1AG	1AC	1Y	1U	1Q	1M	1I	1E	1A
1BF	1BB	1AX	1AT	1AP	1AL	1AH	1AD	1Z	1V	1R	1N	1J	1F	1B
1BG	1BC	1AY	1AU	1AQ	1AM	1AI	1AE	1AA	1W	1S	1O	1K	1G	1C
1BH	1BD	1AZ	1AV	1AR	1AN	1AJ	1AF	1AB	1X	1T	1P	1L	1H	1D

Diagnostic procedure

STEP	INSPECTION		ACTION
1	**VERIFY FREEZE FRAME DATA HAS BEEN RECORDED** • Has FREEZE FRAME DATA been recorded?	Yes	Go to the next step.
		No	Record FREEZE FRAME DATA on repair order, then go to the next step.
2	**VERIFY RELATED REPAIR INFORMATION AVAILABILITY** • Check for related Service Bulletins and/or on-line repair information availability. • Is any related repair information available?	Yes	Perform repair or diagnosis according to the available repair information. • If the vehicle is not repaired, go to the next step.
		No	Go to the next step.

STEP	INSPECTION		ACTION
3	**INSPECT CRUISE CONTROL SWITCH CONNECTOR FOR POOR CONNECTION** • Turn the ignition switch off. • Disconnect cruise control switch connector. • Check for poor connection (such as damaged, pulled-out pins, and corrosion). • Is there any malfunction?	Yes	Repair or replace the terminal, then go to Step 10.
		No	Go to the next step.
4	**INSPECT CRUISE CONTROL SWITCH SIGNAL CIRCUIT FOR SHORT TO POWER** • Turn the ignition switch to the ON position. • Measure voltage between cruise control switch terminal B and body ground. • Is voltage **B+**?	Yes	Repair or replace harness for short to power, then go to Step 10.
		No	Go to the next step.
5	**INSPECT CRUISE CONTROL SWITCH SIGNAL CIRCUIT FOR SHORT TO GROUND** • Turn the ignition switch off. • Check continuity between cruise control switch terminal B and body ground. • Is there continuity?	Yes	Repair or replace harness for short to ground, then go to Step 10.
		No	Go to the next step.
6	**INSPECT CRUISE CONTROL SWITCH GROUND CIRCUIT FOR OPEN CIRCUIT** • Turn the ignition switch off. • Check continuity between cruise control switch terminal C and body ground. • Is there continuity?	Yes	Go to the next step.
		No	Repair or replace harness for open circuit, then go to Step 10.
7	**INSPECT CRUISE CONTROL SWITCH** • Inspect cruise control switch. (See 01–20A–1 CRUISE CONTROL SWITCH INSPECTION [L3, AJ].) • Is there any malfunction?	Yes	Replace cruise control switch, then go to Step 10.
		No	Go to the next step.
8	**INSPECT PCM CONNECTOR FOR POOR CONNECTION** • Turn the ignition switch off. • Disconnect PCM connector. • Check for poor connection (such as damaged, pulled-out pins, and corrosion). • Is there any malfunction?	Yes	Repair or replace the terminal, then go to Step 10.
		No	Go to the next step.
9	**INSPECT CRUISE CONTROL SWITCH SIGNAL CIRCUIT FOR OPEN CIRCUIT** • Turn the ignition switch off. • Check continuity between cruise control switch terminal B and PCM terminal 1AS. • Is there continuity?	Yes	Go to the next step.
		No	Repair or replace harness for open circuit, then go to the next step.
10	**VERIFY TROUBLESHOOTING OF P0564 COMPLETED** • Make sure to reconnect all disconnected connectors. • Clear the DTC from the PCM memory using the WDS or equivalent. • Drive vehicle with cruise control **2 min or more**. • Is same DTC present?	Yes	Replace PCM go to the next step. (See 01–40C–5 PCM REMOVAL/INSTALLATION [AJ].)
		No	Go to the next step.
11	**VERIFY AFTER REPAIR PROCEDURE** • Perform "AFTER REPAIR PROCEDURE". (See 01–02C–7 AFTER REPAIR PROCEDURE [AJ].) • Are any DTCs present?	Yes	Go to the applicable DTC inspection. (See 01–02C–13 DTC TABLE [AJ].)
		No	Troubleshooting completed.

DTC P0571 [AJ]

E6U010200000W74

DTC P0571	Brake switch circuit malfunction
DETECTION CONDITION	• The PCM monitors changes the input voltage for brake switch No.1 and No.2. If the PCM detects that both brake switches No.1 and No.2 remain on or off for **15 s**, the PCM determines that the brake switch circuit has a malfunction. **Diagnostic support note** • This is a continuous monitor (Other). • The MIL does not illuminate. • FREEZE FRAME DATA is not available. • DTC is stored in PCM memory.
POSSIBLE CAUSE	• Brake switch malfunction • Connector or terminal malfunction • Open circuit between brake switch terminal C and body ground • Short to ground circuit between brake switch terminal A and PCM terminal 1AF • Open circuit between brake switch terminal A and PCM terminal 1AF • PCM malfunction

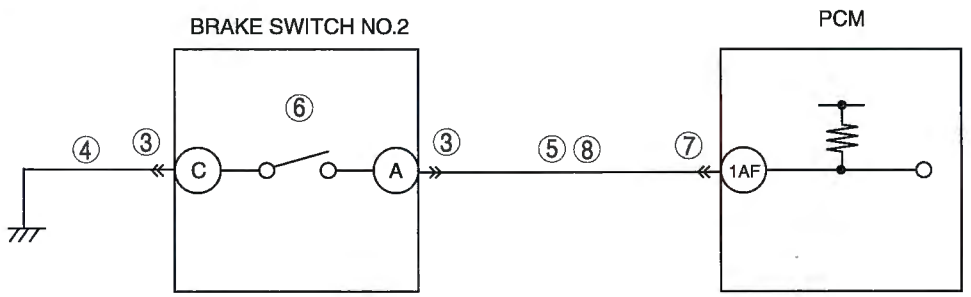

BRAKE SWITCH
HARNESS SIDE CONNECTOR

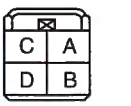

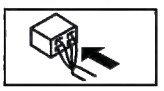

PCM
WIRING HARNESS-SIDE CONNECTOR

1BE	1BA	1AW	1AS	1AO	1AK	1AG	1AC	1Y	1U	1Q	1M	1I	1E	1A
1BF	1BB	1AX	1AT	1AP	1AL	1AH	1AD	1Z	1V	1R	1N	1J	1F	1B
1BG	1BC	1AY	1AU	1AQ	1AM	1AI	1AE	1AA	1W	1S	1O	1K	1G	1C
1BH	1BD	1AZ	1AV	1AR	1AN	1AJ	1AF	1AB	1X	1T	1P	1L	1H	1D

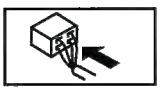

Diagnostic procedure

STEP	INSPECTION		ACTION
1	**VERIFY FREEZE FRAME DATA HAS BEEN RECORDED** • Has FREEZE FRAME DATA been recorded?	Yes	Go to the next step.
		No	Record FREEZE FRAME DATA on repair order, then go to the next step.
2	**VERIFY RELATED REPAIR INFORMATION AVAILABILITY** • Check for related Service Bulletins and/or on-line repair information availability. • Is any related repair information available?	Yes	Perform repair or diagnosis according to the available repair information. • If the vehicle is not repaired, go to the next step.
		No	Go to the next step.
3	**INSPECT BRAKE SWITCH CONNECTOR FOR POOR CONNECTION** • Turn the ignition switch off. • Disconnect brake switch connector. • Check for poor connection (such as damaged, pulled-out pins, and corrosion). • Is there any malfunction?	Yes	Repair or replace the terminal, then go to Step 9.
		No	Go to the next step.
4	**INSPECT BRAKE SWITCH NO.2 GROUND CIRCUIT FOR OPEN CIRCUIT** • Turn the ignition switch to the ON position. • Check continuity between brake switch terminal C and body ground. • Is there continuity?	Yes	Go to the next step.
		No	Repair or replace harness for open circuit, then go to Step 9.

STEP	INSPECTION		ACTION
5	**INSPECT BRAKE SWITCH NO.2 SIGNAL CIRCUIT FOR SHORT TO GROUND** • Turn the ignition switch to the ON position. • Check continuity between brake switch terminal A and body ground. • Is there continuity?	Yes	Repair or replace harness for short to ground, then go to Step 9.
		No	Go to the next step.
6	**INSPECT BRAKE SWITCH NO.2** • Inspect brake switch No.2. (See 04–11–9 BRAKE SWITCH INSPECTION.) • Is there any malfunction?	Yes	Replace brake switch, then go to Step 9. (See 04–11–8 BRAKE PEDAL REMOVAL/ INSTALLATION.)
		No	Go to the next step.
7	**INSPECT PCM CONNECTOR FOR POOR CONNECTION** • Turn the ignition switch off. • Disconnect PCM connector. • Check for poor connection (such as damaged, pulled-out pins, and corrosion). • Is there any malfunction?	Yes	Repair or replace the terminal, then go to Step 9.
		No	Go to the next step.
8	**INSPECT BRAKE SWITCH NO.2 SIGNAL CIRCUIT FOR OPEN CIRCUIT** • Turn the ignition switch off. • Check continuity between brake switch terminal A and PCM terminal 1AF. • Is there continuity?	Yes	Go to the next step.
		No	Repair or replace harness for open circuit, then go to the next step.
9	**VERIFY TROUBLESHOOTING OF P0571 COMPLETED** • Make sure to reconnect all disconnected connectors. • Clear the DTC from the PCM memory using the WDS or equivalent. • Turn the ignition switch to the ON position. • Depress and release brake pedal **5 times or more**. • Is same DTC present?	Yes	Replace PCM, go to the next step. (See 01–40C–5 PCM REMOVAL/INSTALLATION [AJ].)
		No	Go to the next step.
10	**VERIFY AFTER REPAIR PROCEDURE** • Perform "AFTER REPAIR PROCEDURE". (See 01–02C–7 AFTER REPAIR PROCEDURE [AJ].) • Are any DTCs present?	Yes	Go to the applicable DTC inspection. (See 01–02C–13 DTC TABLE [AJ].)
		No	Troubleshooting completed.

DTC P050A [AJ]

E6U010200000WC7

DTC P050A	Cold start idle air control system performance
DETECTION CONDITION	• Actual Idle speed is lower than expected by **100 rpm** for **8.4 s** when target idle speed is **above 0 rpm** at cold start or ignition retard value is **above 8.9 °C {48 °F}.** **Note** • If atmospheric pressure is **less than 72.3 kPa {542 mmHg, 21.3 inHg}** or intake air temperature is **below -10 °C {14 °F}**, the PCM cancels diagnosis of P050A. **Diagnostic support note** • This is a continuous monitor (CCM). • MIL illuminates if the PCM detects the above malfunctioning condition in two consecutive drive cycles or in one drive cycle while the DTC for the same malfunction has been stored in the PCM. • PENDING CODE is available if the PCM detects the above malfunction conditions during the first drive cycle. • FREEZE FRAME DATA is available. • DTC is stored in the PCM memory.
POSSIBLE CAUSE	• Electronic throttle control system malfunction • Throttle valve stuck or blockage • Air suction in intake-air system • PCM malfunction

Diagnostic procedure

STEP	INSPECTION		ACTION
1	**VERIFY FREEZE FRAME DATA AND DIAGNOSTIC MONITORING TEST RESULTS HAVE BEEN RECORDED** • Have FREEZE FRAME DATA and DIAGNOSTIC MONITORING TEST RESULTS (CCM related) been recorded?	Yes	Go to the next step.
		No	Record the freeze frame data and diagnostic monitoring test results on the repair order, then go to the next step.
2	**VERIFY RELATED REPAIR INFORMATION AVAILABILITY** • Verify related service Bulletins and/or on-line repair information availability. • Is any related repair information available?	Yes	Perform repair or diagnosis according to the available repair information. • If the vehicle is not repaired, go to the next step.
		No	Go to the next step.
3	**IDENTIFY TRIGGER DTC FOR FREEZE FRAME DATA** • Is P050A on FREEZE FRAME DATA?	Yes	Go to the next step.
		No	Go to troubleshooting procedures for DTC on freeze frame data. (See 01–02C–13 DTC TABLE [AJ].)
4	**CHECK AIR SUCTION IN INTAKE-AIR SYSTEM** • Start the engine. • Check air suction between MAF sensor and intake manifold. • Is there any air suction in the intake-air system?	Yes	Repair or replace malfunctioning part, then go to Step 7.
		No	Go to the next step.
5	**VERIFY ELECTRONIC THROTTLE CONTROL SYSTEM OPERATION** • Perform the Electronic Throttle Control System Operation Inspection. (See 01–03C–66 Electronic Throttle Control Inspection.) • Does the electronic throttle control system operate properly?	Yes	Go to the next step.
		No	Repair or replace malfunctioning part according to inspection result. Then go to Step 7.
6	**VERIFY THROTTLE VALVE** • Turn the ignition switch to off. • Remove the throttle valve with connector connected. • Access ETC_DSD PID using the WDS or equivalent. • Turn the ignition switch to ON position (Engine off). • Move the throttle valve using the ETC_DSD PID simulation function. • Dose the throttle valve move smoothly?	Yes	Go to the next step.
		No	Clean the throttle valve and retest. If the problem does not resolve, replace the throttle body. Then go to the next step.
7	**VERIFY TROUBLESHOOTING OF DTC P050A COMPLETED** • Make sure to reconnect all disconnected connectors. • Clear DTC from PCM memory using WDS or equivalent. • Perform the KOER SELF TEST using the WDS or equivalent. (See 01–02C–8 KOEO/KOER SELF TEST [AJ].) • Is the PENDING CODE same DTC present?	Yes	Replace the PCM, then go to the next step. (See 01–40C–5 PCM REMOVAL/INSTALLATION [AJ].)
		No	Go to the next step.
8	**VERIFY AFTER REPAIR PROCEDURE** • Perform the "After Repair Procedure". (See 01–02C–7 AFTER REPAIR PROCEDURE [AJ].) • Are any DTC present?	Yes	Go to the applicable DTC troubleshooting. (See 01–02C–13 DTC TABLE [AJ].)
		No	Troubleshooting completed.

DTC P050B [AJ]

E6U010200000WC8

DTC P050B	Cold start ignition timing performance
DETECTION CONDITION	• The PCM monitors actual ignition timing while electronic spark advance control last idle correction operating. If the ignition timing is out of specified range, the PCM determines that the ignition timing at co condition has performance problem. **Diagnostic support note** • This is a continuous monitor (CCM). • MIL illuminates if the PCM detects the above malfunctioning condition in two consecutive drive cycles or in one drive cycle while the DTC for the same malfunction has been stored in the PCM. • PENDING CODE is available if the PCM detects the above malfunction conditions during the first drive cycle. • FREEZE FRAME DATA is available. • DTC is stored in the PCM memory.
POSSIBLE CAUSE	• Electronic throttle control system malfunction • Throttle valve stuck or blockage • Air suction in intake-air system • PCM malfunction

Diagnostic procedure

STEP	INSPECTION		ACTION
1	**VERIFY FREEZE FRAME DATA AND DIAGNOSTIC MONITORING TEST RESULTS HAVE BEEN RECORDED** • Have FREEZE FRAME DATA and DIAGNOSTIC MONITORING TEST RESULTS (CCM related) been recorded?	Yes	Go to the next step.
		No	Record the freeze frame data and diagnostic monitoring test results on the repair order, then go to the next step.
2	**VERIFY RELATED REPAIR INFORMATION AVAILABILITY** • Verify related service Bulletins and/or on-line repair information availability. • Is any related repair information available?	Yes	Perform repair or diagnosis according to the available repair information. • If the vehicle is not repaired, go to the next step.
		No	Go to the next step.
3	**IDENTIFY TRIGGER DTC FOR FREEZE FRAME DATA** • Is P050B on FREEZE FRAME DATA?	Yes	Go to the next step.
		No	Go to troubleshooting procedures for DTC on freeze frame data. (See 01–02C–13 DTC TABLE [AJ].)
4	**CHECK AIR SUCTION IN INTAKE-AIR SYSTEM** • Start the engine. • Check air suction between MAF sensor and intake manifold. • Is there any air suction in the intake-air system?	Yes	Repair or replace malfunctioning part, then go to Step 7.
		No	Go to the next step.
5	**VERIFY ELECTRONIC THROTTLE CONTROL SYSTEM OPERATION** • Perform the Electronic Throttle Control System Operation Inspection. (See 01–03C–66 Electronic Throttle Control Inspection.) • Does the electronic throttle control system operate properly?	Yes	Go to the next step.
		No	Repair or replace malfunctioning part according to inspection result. Then go to Step 7.
6	**VERIFY THROTTLE VALVE** • Turn the ignition switch to off. • Remove the throttle valve with connector connected. • Access ETC_DSD PID using the WDS or equivalent. • Turn the ignition switch to ON position (Engine off). • Move the throttle valve using the ETC_DSD PID simulation function. • Dose the throttle valve move smoothly?	Yes	Go to the next step.
		No	Clean the throttle valve and retest. If the problem does not resolve, replace the throttle body. Then go to the next step.
7	**VERIFY TROUBLESHOOTING OF DTC P050B COMPLETED** • Make sure to reconnect all disconnected connectors. • Clear DTC from PCM memory using WDS or equivalent. • Perform the KOER SELF TEST using the WDS or equivalent. (See 01–02C–8 KOEO/KOER SELF TEST [AJ].) • Is the PENDING CODE same DTC present?	Yes	Replace the PCM, then go to the next step. (See 01–40C–5 PCM REMOVAL/INSTALLATION [AJ].)
		No	Go to the next step.
8	**VERIFY AFTER REPAIR PROCEDURE** • Perform the "After Repair Procedure". (See 01–02C–7 AFTER REPAIR PROCEDURE [AJ].) • Are any DTC present?	Yes	Go to the applicable DTC troubleshooting. (See 01–02C–13 DTC TABLE [AJ].)
		No	Troubleshooting completed.

DTC P0601 [AJ]

E6U010200000W75

DTC P0601	PCM memory check sum error
DETECTION CONDITION	• PCM internal memory check sum error • PCM has internal abnormalities **Diagnostic support note** • This is a continuous monitor (CCM). • PCM has internal abnormalities • MIL illuminates if the PCM detects the above malfunction condition during the first drive cycle. • FREEZE FRAME DATA is available. • The DTC is stored in the PCM memory.
POSSIBLE CAUSE	• PCM internal memory malfunction

Diagnostic procedure

STEP	INSPECTION		ACTION
1	**VERIFY FREEZE FRAME DATA HAS BEEN RECORDED** • Has FREEZE FRAME DATA been recorded?	Yes	Go to the next step.
		No	Record the FREEZE FRAME DATA on the repair order, then go to the next step.
2	**VERIFY RELATED REPAIR INFORMATION AVAILABILITY** • Verify related Service Bulletins and/or on-line repair information availability. • Is any related repair information available?	Yes	Perform repair or diagnosis according to the available repair information. • If the vehicle is not repaired, go to the next step.
		No	Go to the next step.
3	**VERIFY TROUBLESHOOTING OF DTC P0601 COMPLETED** • Make sure to reconnect all disconnected connectors. • Clear DTC from PCM memory using WDS or equivalent. • Perform the KOEO or KOER SELF TEST using the WDS or equivalent. (See 01–02C–8 KOEO/KOER SELF TEST [AJ].) • Is the PENDING CODE same DTC present?	Yes	Replace the PCM, then go to the next step. (See 01–40C–5 PCM REMOVAL/INSTALLATION [AJ].)
		No	Go to the next step.
4	**VERIFY AFTER REPAIR PROCEDURE** • Perform the "AFTER REPAIR PROCEDURE". (See 01–02C–7 AFTER REPAIR PROCEDURE [AJ].) • Is any DTC present?	Yes	Go to the applicable DTC inspection. (See 01–02C–13 DTC TABLE [AJ].)
		No	DTC troubleshooting completed.

DTC P0602 [AJ]

E6U010200000W76

DTC P0602	PCM programming error
DETECTION CONDITION	• No configuration data in PCM. **Note** • If the "PCM CONFIGURATION" is successful, the PCM stores DTC P0602 and illuminates the MIL (system is normal). Clear DTC P0602 using the WDS or equivalent after the "PCM CONFIGURATION". • The MIL goes out after three drive cycles with no failure (DTCs remain in PCM). **Diagnostic support note** • This is a continuous monitor (CCM). • MIL illuminates if the PCM detects the above malfunction condition during the first drive cycle. • FREEZE FRAME DATA is available. • DTC is stored in PCM memory.
POSSIBLE CAUSE	• Complete configuration has not been completed • PCM malfunction

Diagnostic procedure

STEP	INSPECTION		ACTION
1	**VERIFY FREEZE FRAME DATA HAS BEEN RECORDED** • Has FREEZE FRAME DATA been recorded?	Yes	Go to the next step.
		No	Record FREEZE FRAME DATA on repair order, then go to the next step.
2	**VERIFY RELATED REPAIR INFORMATION AVAILABILITY** • Check for related Service Bulletins and/or on-line repair information availability. • Is any related repair information available?	Yes	Perform repair or diagnosis according to the available repair information. • If the vehicle is not repaired, go to the next step.
		No	Perform PCM configuration procedure, then go to the next step. (See 01–40C–23 PCM REPLACEMENT [AJ].)
3	**VERIFY TROUBLESHOOTING OF DTC P0602 COMPLETED** • Make sure to reconnect all disconnected connectors. • Clear DTC from PCM memory using WDS or equivalent. • Perform the KOEO or KOER SELF TEST using the WDS or equivalent. (See 01–02C–8 KOEO/KOER SELF TEST [AJ].) • Is the PENDING CODE same DTC present?	Yes	Replace PCM, then go to the next step. (See 01–40C–5 PCM REMOVAL/INSTALLATION [AJ].)
		No	Go to the next step.
4	**VERIFY AFTER REPAIR PROCEDURE** • Perform "AFTER REPAIR PROCEDURE". (See 01–02C–7 AFTER REPAIR PROCEDURE [AJ].) • Are any DTCs present?	Yes	Go to the applicable DTC inspection. (See 01–02C–13 DTC TABLE [AJ].)
		No	Troubleshooting completed.

DTC P0604 [AJ]

E6U010200000W77

DTC P0604	PCM random access memory error
DETECTION CONDITION	• PCM internal random access memory error **Diagnostic support note** • This is a continuous monitor (CCM). • MIL illuminates if the PCM detects the above malfunction condition during the first drive cycle. • FREEZE FRAME DATA is available. • The DTC is stored in the PCM memory.
POSSIBLE CAUSE	• PCM internal RAM malfunction

Diagnostic procedure

STEP	INSPECTION		ACTION
1	**VERIFY FREEZE FRAME DATA HAS BEEN RECORDED** • Has FREEZE FRAME DATA been recorded?	Yes	Go to the next step.
		No	Record the FREEZE FRAME DATA on the repair order, then go to the next step.
2	**VERIFY RELATED REPAIR INFORMATION AVAILABILITY** • Verify related Service Bulletins and/or on-line repair information availability. • Is any related repair information available?	Yes	Perform repair or diagnosis according to the available repair information. • If the vehicle is not repaired, go to the next step.
		No	Go to the next step.
3	**VERIFY TROUBLESHOOTING OF DTC P0604 COMPLETED** • Make sure to reconnect all disconnected connectors. • Clear DTC from PCM memory using WDS or equivalent. • Perform the KOEO or KOER SELF TEST using the WDS or equivalent. (See 01–02C–8 KOEO/KOER SELF TEST [AJ].) • Is the PENDING CODE same DTC present?	Yes	Replace the PCM, then go to the next step. (See 01–40C–5 PCM REMOVAL/INSTALLATION [AJ].)
		No	Go to the next step.
4	**VERIFY AFTER REPAIR PROCEDURE** • Perform the "AFTER REPAIR PROCEDURE". (See 01–02C–7 AFTER REPAIR PROCEDURE [AJ].) • Is any DTC present?	Yes	Go to the applicable DTC inspection. (See 01–02C–13 DTC TABLE [AJ].)
		No	DTC troubleshooting completed.

DTC P0606 [AJ]

E6U010200000W78

DTC P0606	ECM/PCM processor
DETECTION CONDITION	• PCM internal CPU malfunction. **Diagnostic support note** • This is a continuous monitor (CCM). • MIL illuminates if the PCM detects the above malfunction condition during the first drive cycle. • FREEZE FRAME DATA is available. • The DTC is stored in the PCM memory.
POSSIBLE CAUSE	• PCM internal CPU malfunction

Diagnostic procedure

STEP	INSPECTION		ACTION
1	**VERIFY FREEZE FRAME DATA HAS BEEN RECORDED** • Has FREEZE FRAME DATA been recorded?	Yes	Go to the next step.
		No	Record FREEZE FRAME DATA on repair order, then go to the next step.
2	**VERIFY RELATED REPAIR INFORMATION AVAILABILITY** • Check for related Service Bulletins and/or on-line repair information availability. • Is any related repair information available?	Yes	Perform repair or diagnosis according to the available repair information. • If the vehicle is not repaired, go to the next step.
		No	Go to the next step.
3	**VERIFY TROUBLESHOOTING OF DTC P0606 COMPLETED** • Make sure to reconnect all disconnected connectors. • Clear DTC from PCM memory using WDS or equivalent. • Perform the KOEO or KOER SELF TEST using the WDS or equivalent. (See 01–02C–8 KOEO/KOER SELF TEST [AJ].) • Is the PENDING CODE same DTC present?	Yes	Replace PCM, go to the next step. (See 01–40C–5 PCM REMOVAL/INSTALLATION [AJ].)
		No	Go to the next step.
4	**VERIFY AFTER REPAIR PROCEDURE** • Perform "AFTER REPAIR PROCEDURE". (See 01–02C–7 AFTER REPAIR PROCEDURE [AJ].) • Are any DTCs present?	Yes	Go to the applicable DTC inspection. (See 01–02C–13 DTC TABLE [AJ].)
		No	Troubleshooting completed.

DTC P0610 [AJ]

E6U010200000W79

DTC P0610	Control module vehicle options error
DETECTION CONDITION	• PCM data configuration error **Diagnostic support note** • This is a continuous monitor (CCM). • MIL illuminates if the PCM detects the above malfunction condition during the first drive cycle. • FREEZE FRAME DATA is available. • DTC is stored in PCM memory.
POSSIBLE CAUSE	• Configuration procedure has not been completed • PCM malfunction

Diagnostic procedure

STEP	INSPECTION		ACTION
1	**VERIFY FREEZE FRAME DATA HAS BEEN RECORDED** • Has FREEZE FRAME DATA been recorded?	Yes	Go to the next step.
		No	Record FREEZE FRAME DATA on repair order, then go to the next step.
2	**VERIFY RELATED REPAIR INFORMATION AVAILABILITY** • Check for related Service Bulletins and/or on-line repair information availability. • Is any related repair information available?	Yes	Perform repair or diagnosis according to the available repair information. • If the vehicle is not repaired, go to the next step.
		No	Perform PCM configuration procedure, then go to the next step. (See 01–40C–23 PCM REPLACEMENT [AJ].)
3	**VERIFY TROUBLESHOOTING OF DTC P0610 COMPLETED** • Make sure to reconnect all disconnected connectors. • Clear DTC from PCM memory using WDS or equivalent. • Perform the KOEO or KOER SELF TEST using the WDS or equivalent. (See 01–02C–8 KOEO/KOER SELF TEST [AJ].) • Is the PENDING CODE same DTC present?	Yes	Replace PCM, then go to the next step. (See 01–40C–5 PCM REMOVAL/INSTALLATION [AJ].)
		No	Go to the next step.
4	**VERIFY AFTER REPAIR PROCEDURE** • Perform "AFTER REPAIR PROCEDURE". (See 01–02C–7 AFTER REPAIR PROCEDURE [AJ].) • Are any DTCs present?	Yes	Go to the applicable DTC inspection. (See 01–02C–13 DTC TABLE [AJ].)
		No	Troubleshooting completed.

DTC P0638 [AJ]

E6U010200000W80

DTC P0638	Throttle actuator control circuit range/performance problem
DETECTION CONDITION	• The PCM compares the actual TP with the target TP when the engine is running. If the difference is more than the specification, the PCM determines that there is a throttle actuator control circuit range/performance problem. **Diagnostic support note** • This is a continuous monitor (CCM). • MIL illuminates if the PCM detects the above malfunction condition during the first drive cycle. • FREEZE FRAME DATA is available. • The DTC is stored in the PCM memory.
POSSIBLE CAUSE	• Throttle actuator malfunction • Throttle valve malfunction • PCM malfunction

Diagnostic procedure

STEP	INSPECTION		ACTION
1	**VERIFY FREEZE FRAME DATA HAS BEEN RECORDED** • Has FREEZE FRAME DATA been recorded?	Yes	Go to the next step.
		No	Record the FREEZE FRAME DATA on the repair order, then go to the next step.
2	**VERIFY RELATED REPAIR INFORMATION AVAILABILITY** • Verify related Service Bulletins and/or on-line repair information availability. • Is any related repair information available?	Yes	Perform repair or diagnosis according to the available repair information. • If the vehicle is not repaired, go to the next step.
		No	Go to the next step.
3	**VERIFY RELATED PENDING CODE OR STORED DTC** • Turn the ignition switch off, then to the ON position (Engine off). • Verify the related PENDING CODE or stored DTCs. • Are other DTCs present?	Yes	Go to the applicable DTC inspection. (See 01–02C–13 DTC TABLE [AJ].)
		No	Go to the next step.
4	**VERIFY TROUBLESHOOTING OF P0638 COMPLETED** • Make sure to reconnect all disconnected connectors. • Clear the DTC from the PCM memory using the WDS or equivalent. • Start the engine. • Is the same DTC present?	Yes	Replace the PCM, go to the next step. (See 01–40C–5 PCM REMOVAL/INSTALLATION [AJ].)
		No	Go to the next step.
5	**VERIFY AFTER REPAIR PROCEDURE** • Perform the "AFTER REPAIR PROCEDURE". (See 01–02C–7 AFTER REPAIR PROCEDURE [AJ].) • Is any DTC present?	Yes	Go to the applicable DTC inspection. (See 01–02C–13 DTC TABLE [AJ].)
		No	DTC troubleshooting completed.

DTC P0703 [AJ]

E6U010201089W01

DTC P0703	Brake switch No.1 input malfunction
DETECTION CONDITION	• The PCM monitors changes in input voltage from brake switch No.1. If the PCM does not detect voltage changes at PCM terminal 1AJ when alternately accelerated and decelerated **8 times**, the PCM determine that brake switch No.1 circuit has a malfunction. **Diagnostic support note** • This is a continuous monitor (CCM). • MIL illuminates if the PCM detects the above malfunction condition in two consecutive drive cycles or in one drive cycle while the DTC for the same malfunction has been stored in the PCM. • PENDING CODE is available if the PCM detects the above malfunction condition during the first drive cycle. • FREEZE FRAME DATA is available. • DTC is stored in PCM memory.
POSSIBLE CAUSE	• Brake switch malfunction • Connector or terminal malfunction • Open circuit between battery positive terminal and brake switch terminal B • Short to power circuit between brake switch terminal D and PCM terminal 1AJ • Open circuit between brake switch terminal D and PCM terminal 1AJ • PCM malfunction

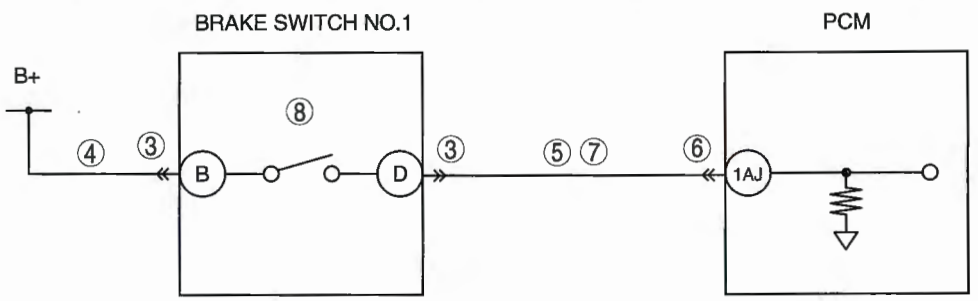

BRAKE SWITCH
HARNESS SIDE CONNECTOR

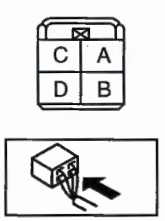

PCM
WIRING HARNESS-SIDE CONNECTOR

1BE	1BA	1AW	1AS	1AO	1AK	1AG	1AC	1Y	1U	1Q	1M	1I	1E	1A
1BF	1BB	1AX	1AT	1AP	1AL	1AH	1AD	1Z	1V	1R	1N	1J	1F	1B
1BG	1BC	1AY	1AU	1AQ	1AM	1AI	1AE	1AA	1W	1S	1O	1K	1G	1C
1BH	1BD	1AZ	1AV	1AR	1AN	1AJ	1AF	1AB	1X	1T	1P	1L	1H	1D

Diagnostic procedure

STEP	INSPECTION		ACTION
1	**VERIFY FREEZE FRAME DATA HAS BEEN RECORDED** • Has FREEZE FRAME DATA been recorded?	Yes	Go to the next step.
		No	Record FREEZE FRAME DATA on repair order, then go to the next step.
2	**VERIFY RELATED REPAIR INFORMATION AVAILABILITY** • Check for related Service Bulletins availability. • Is any related repair information available?	Yes	Perform repair or diagnosis according to the available repair information. • If the vehicle is not repaired, go to the next step.
		No	Go to the next step.
3	**INSPECT BRAKE SWITCH CONNECTOR POOR CONNECTION** • Turn the ignition switch off. • Disconnect brake switch connector. • Check for poor connection (such as damaged, pulled-out pins, and corrosion, etc.). • Is there any malfunction?	Yes	Repair or replace the terminal, then go to Step 9.
		No	Go to the next step.
4	**INSPECT BRAKE SWITCH NO.1 POWER CIRCUIT FOR OPEN CIRCUIT** • Turn the ignition switch to the ON position. • Measure voltage between brake switch terminal B and body ground. • Is voltage **B+**?	Yes	Go to the next step.
		No	Repair or replace harness for open circuit, then go to Step 9.
5	**INSPECT BRAKE SWITCH NO.1 SIGNAL CIRCUIT FOR SHORT TO POWER** • Turn the ignition switch to the ON position. • Measure voltage between brake switch terminal D and body ground. • Is voltage **B+**?	Yes	Repair or replace harness for short to power, then go to Step 9.
		No	Go to the next step.
6	**INSPECT PCM CONNECTOR FOR POOR CONNECTION** • Turn the ignition switch off. • Disconnect PCM connector. • Check for poor connection (such as damaged, pulled-out pins, and corrosion). • Is there any malfunction?	Yes	Repair or replace the terminal, then go to Step 9.
		No	Go to the next step.
7	**INSPECT BRAKE SWITCH NO.1 SIGNAL CIRCUIT FOR OPEN CIRCUIT** • Turn the ignition switch off. • Check continuity between brake switch terminal D and PCM terminal 1AJ. • Is there continuity?	Yes	Go to the next step.
		No	Repair or replace harness for open circuit, then go to Step 9.
8	**INSPECT BRAKE SWITCH NO.1** • Inspect brake switch No.1. (See 04–11–9 BRAKE SWITCH INSPECTION.) • Is there any malfunction?	Yes	Replace brake switch, then go to the next step. (See 04–11–8 BRAKE PEDAL REMOVAL/ INSTALLATION.)
		No	Go to the next step.
9	**VERIFY TROUBLESHOOTING OF DTC P0703 COMPLETED** • Make sure to reconnect all disconnected connectors. • Clear the DTC from the memory using the WDS or equivalent. • Drive vehicle **30 km/h {18.6 mph} or more.** • Depress and release brake pedal **8 times or more** when driving vehicle. • Is PENDING CODE same as DTC present?	Yes	Replace PCM, then go to the next step. (See 01–40C–5 PCM REMOVAL/INSTALLATION [AJ].)
		No	Go to the next step.
10	**VERIFY AFTER REPAIR PROCEDURE** • Perform "AFTER REPAIR PROCEDURE". (See 01–02C–7 AFTER REPAIR PROCEDURE [AJ].) • Are any DTCs present?	Yes	Go to the applicable DTC inspection. (See 01–02C–13 DTC TABLE [AJ].)
		No	Troubleshooting completed.

DTC P0704 [AJ]

E6U010201089W02

DTC P0704	Clutch switch input malfunction
DETECTION CONDITION	• The PCM monitors changes in input voltage from the clutch pedal position switch. If the PCM does not detect voltage changes at PCM terminal 1AB when the vehicle run with vehicle speed **above 30 km/h {18.6 mph}** and stop **8 times** alternately, the PCM determines that the clutch pedal position switch circuit has a malfunction. **Diagnostic support note** • This is a continuous monitor (CCM). • MIL illuminates if the PCM detects the above malfunction condition in two consecutive drive cycles or in one drive cycle while the DTC for the same malfunction has been stored in the PCM. • PENDING CODE is available if the PCM detects the above malfunction condition during the first drive cycle. • FREEZE FRAME DATA is available. • DTC is stored in PCM memory.
POSSIBLE CAUSE	• Clutch switch malfunction • Connector or terminal malfunction • Open circuit between clutch pedal position switch terminal D and body ground • Open circuit between clutch pedal position switch terminal B and PCM terminal 1AB • Short to ground circuit between clutch pedal position switch terminal B and PCM terminal 1AB • PCM malfunction

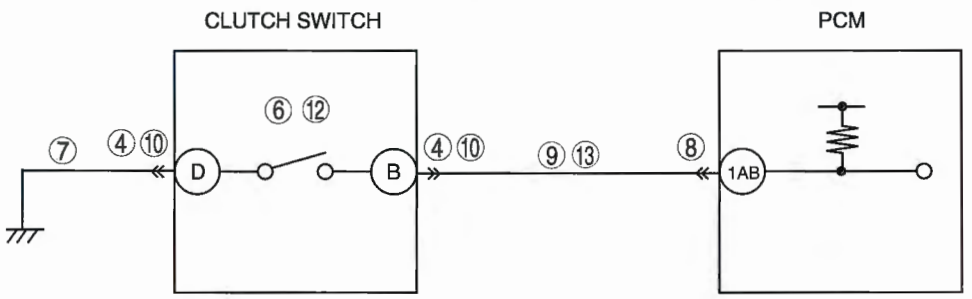

CLUTCH SWITCH
HARNESS SIDE CONNECTOR

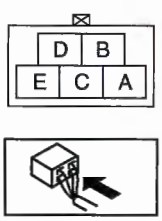

PCM
WIRING HARNESS-SIDE CONNECTOR

1BE	1BA	1AW	1AS	1AO	1AK	1AG	1AC	1Y	1U	1Q	1M	1I	1E	1A
1BF	1BB	1AX	1AT	1AP	1AL	1AH	1AD	1Z	1V	1R	1N	1J	1F	1B
1BG	1BC	1AY	1AU	1AQ	1AM	1AI	1AE	1AA	1W	1S	1O	1K	1G	1C
1BH	1BD	1AZ	1AV	1AR	1AN	1AJ	1AF	1AB	1X	1T	1P	1L	1H	1D

Diagnostic procedure

STEP	INSPECTION		ACTION
1	**VERIFY FREEZE FRAME DATA HAS BEEN RECORDED** • Has FREEZE FRAME DATA been recorded?	Yes	Go to the next step.
		No	Record FREEZE FRAME DATA on repair order, then go to the next step.
2	**VERIFY RELATED REPAIR INFORMATION AVAILABILITY** • Check for related Service Bulletins and/or on-line repair information availability. • Is any related repair information available?	Yes	Perform repair or diagnosis according to the available repair information. • If the vehicle is not repaired, go to the next step.
		No	Go to the next step.
3	**CLASSIFY HIGH INPUT OR LOW INPUT** • Connect WDS or equivalent to DLC-2. • Access CPP PID. • Verify CPP PID during clutch pedal operation. • Is CPP PID always OFF?.	Yes	Go to the next step.
		No	Go to Step 10.

STEP	INSPECTION		ACTION
4	**INSPECT CLUTCH PEDAL POSITION SWITCH CONNECTOR FOR POOR CONNECTION** • Turn the ignition switch off. • Disconnect clutch pedal position switch connector. • Check for poor connection (such as damaged, pulled-out pins, and corrosion). • Is there any malfunction?	Yes	Repair or replace the terminal, then go to Step 14.
		No	Go to the next step.
5	**CLASSIFY CLUTCH PEDAL POSITION SWITCH OR CIRCUIT** • Connect WDS or equivalent to DLC-2. • Access CPP PID. • Connect a jumper wire between clutch pedal position switch terminals B and D. • Is CPP PID on?	Yes	Go to the next step.
		No	Go to Step 7.
6	**INSPECT CLUTCH PEDAL POSITION SWITCH** • Inspect clutch pedal position switch. (See 01–40C–23 CLUTCH PEDAL POSITION (CPP) SWITCH INSPECTION [AJ].) • Is there any malfunction?	Yes	Replace clutch pedal position switch, then go to Step 14. (See 05–10–7 CLUTCH PEDAL REMOVAL/ INSTALLATION [G35M-R, A65M-R].)
		No	Go to Step 14.
7	**INSPECT CLUTCH PEDAL POSITION SWITCH GROUND CIRCUIT FOR OPEN CIRCUIT** • Turn the ignition switch off. • Check continuity between clutch pedal position switch terminal D and body ground. • Is there continuity?	Yes	Go to the next step.
		No	Repair or replace harness for open circuit, then go to Step 14.
8	**INSPECT PCM CONNECTOR FOR POOR CONNECTION** • Turn the ignition switch off. • Disconnect PCM connector. • Check for poor connection (such as damaged, pulled-out pins, and corrosion). • Is there any malfunction?	Yes	Repair or replace the terminal, then go to Step 14.
		No	Go to the next step.
9	**INSPECT CLUTCH PEDAL POSITION SWITCH SIGNAL CIRCUIT FOR OPEN CIRCUIT** • Turn the ignition switch off. • Check continuity between clutch pedal position switch terminal B and PCM terminal 1AB. • Is there continuity?	Yes	Go to Step 14.
		No	Repair or replace harness for open circuit, then go to Step 14.
10	**INSPECT CLUTCH PEDAL POSITION SWITCH CONNECTOR FOR POOR CONNECTION** • Turn the ignition switch off. • Disconnect clutch pedal position switch connector. • Check for poor connection (such as damaged, pulled-out pins, and corrosion). • Is there any malfunction?	Yes	Repair or replace the terminal, then go to Step 14.
		No	Go to the next step.
11	**CLASSIFY CLUTCH PEDAL POSITION SWITCH OR CIRCUIT** • Connect WDS or equivalent to DLC-2. • Access CPP PID. • Verify that CPP PID changes from ON to OFF when clutch pedal position switch connector is disconnected. • Does CPP PID change from ON to OFF?	Yes	Go to the next step.
		No	Go to Step 13.
12	**INSPECT CLUTCH PEDAL POSITION SWITCH** • Inspect clutch pedal position switch. (See 01–40C–23 CLUTCH PEDAL POSITION (CPP) SWITCH INSPECTION [AJ].) • Is there any malfunction?	Yes	Replace clutch pedal position switch, then go to Step 14. (See 05–10–7 CLUTCH PEDAL REMOVAL/ INSTALLATION [G35M-R, A65M-R].)
		No	Go to Step 14.
13	**INSPECT CLUTCH PEDAL POSITION SWITCH SIGNAL CIRCUIT FOR SHORT TO GROUND** • Turn the ignition switch off. • Check continuity between clutch pedal position switch terminal B and body ground. • Is there continuity?	Yes	Repair or replace harness for short to ground, then go to the next step.
		No	Go to the next step.

STEP	INSPECTION		ACTION
14	**VERIFY TROUBLESHOOTING OF DTC P0704 COMPLETED** • Make sure to reconnect all disconnected connectors. • Start engine. • Clear the DTC from the PCM memory using the WDS or equivalent. • Operate clutch pedal when the vehicle run and stop **8 times** alternately. • Is PENDING CODE same as DTC present?	Yes	Replace PCM, then go to the next step. (See 01–40C–5 PCM REMOVAL/INSTALLATION [AJ].)
		No	Go to the next step.
15	**VERIFY AFTER REPAIR PROCEDURE** • Perform "AFTER REPAIR PROCEDURE". (See 01–02C–7 AFTER REPAIR PROCEDURE [AJ].) • Are any DTCs present?	Yes	Go to the applicable DTC inspection. (See 01–02C–13 DTC TABLE [AJ].)
		No	Troubleshooting completed.

DTC P0850 [AJ]

E6U010201089W03

DTC P0850	Neutral switch input malfunction
DETECTION CONDITION	• The PCM monitors changes in input voltage from the neutral switch. If the PCM does not detect voltage changes at PCM terminal 2X voltage when running the vehicle at a vehicle speed of **30 km/h {18.6 mph} or above** clutch pedal turns press and depress **10 times** repeatedly, the PCM determines that the neutral switch circuit has a malfunction. **Diagnostic support note** • This is a continuous monitor (CCM). • MIL illuminates if the PCM detects the above malfunction condition in two consecutive drive cycles or in one drive cycle while the DTC for the same malfunction has been stored in the PCM. • PENDING CODE is available if the PCM detects the above malfunction condition during the first drive cycle. • FREEZE FRAME DATA is available. • DTC is stored in PCM memory.
POSSIBLE CAUSE	• Neutral switch malfunction • Connector or terminal malfunction • Open circuit between neutral switch terminal A and body ground • Open circuit between neutral switch terminal B and PCM terminal 2X • Short to ground circuit between neutral switch terminal B and PCM terminal 2X • PCM malfunction

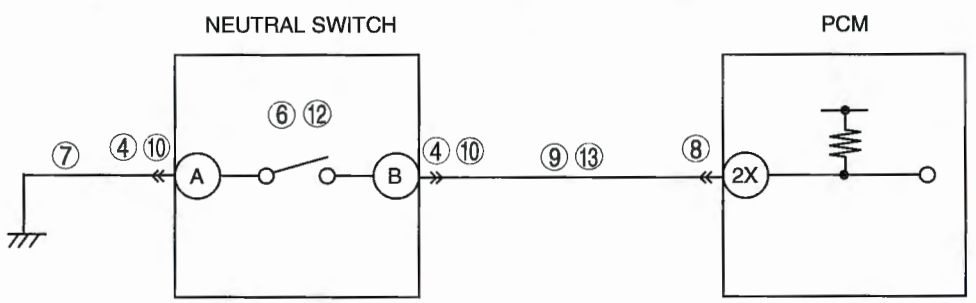

NEUTRAL SWITCH
HARNESS SIDE CONNECTOR



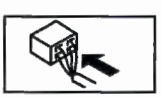

PCM
WIRING HARNESS-SIDE CONNECTOR

2BE	2BA	2AW	2AS	2AO	2AK	2AG	2AC	2Y	2U	2Q	2M	2I	2E	2A
2BF	2BB	2AX	2AT	2AP	2AL	2AH	2AD	2Z	2V	2R	2N	2J	2F	2B
2BG	2BC	2AY	2AU	2AQ	2AM	2AI	2AE	2AA	2W	2S	2O	2K	2G	2C
2BH	2BD	2AZ	2AV	2AR	2AN	2AJ	2AF	2AB	2X	2T	2P	2L	2H	2D

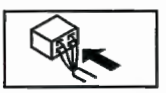

Diagnostic procedure

STEP	INSPECTION		ACTION
1	**VERIFY FREEZE FRAME DATA HAS BEEN RECORDED** • Has FREEZE FRAME DATA been recorded?	Yes	Go to the next step.
		No	Record FREEZE FRAME DATA on repair order, then go to the next step.
2	**VERIFY RELATED REPAIR INFORMATION AVAILABILITY** • Check for related Service Bulletins and/or on-line repair information availability. • Is any related repair information available?	Yes	Perform repair or diagnosis according to the available repair information. • If the vehicle is not repaired, go to the next step.
		No	Go to the next step.
3	**CLASSIFY HIGH INPUT OR LOW INPUT** • Connect WDS or equivalent to DLC-2. • Access CPP/PNP PID. • Verify CPP/PNP PID when gear in neutral position. • Is CPP/PNP PID always OFF?.	Yes	Go to the next step.
		No	Go to Step 10.
4	**INSPECT NEUTRAL SWITCH CONNECTOR FOR POOR CONNECTION** • Turn the ignition switch off. • Disconnect neutral switch connector. • Check for poor connection (such as damaged, pulled-out pins, and corrosion). • Is there any malfunction?	Yes	Repair or replace the terminal, then go to Step 14.
		No	Go to the next step.
5	**CLASSIFY NEUTRAL SWITCH OR CIRCUIT** • Connect WDS or equivalent to DLC-2. • Access CPP/PNP PID. • Connect a jumper wire between neutral switch terminals A and B. • Is CPP/PNP PID on?	Yes	Go to the next step.
		No	Go to Step 7.
6	**INSPECT NEUTRAL SWITCH** • Inspect neutral switch. (See 01–40C–24 NEUTRAL SWITCH INSPECTION [AJ].) • Is there any malfunction?	Yes	Replace neutral switch, then go to Step 14. (See 05–15B–4 NEUTRAL SWITCH REMOVAL/ INSTALLATION [A65M-R].)
		No	Go to Step 14.
7	**INSPECT NEUTRAL SWITCH GROUND CIRCUIT FOR OPEN CIRCUIT** • Turn the ignition switch off. • Check continuity between neutral switch terminal A and body ground. • Is there continuity?	Yes	Go to the next step.
		No	Repair or replace harness for open circuit, then go to Step 14.
8	**INSPECT PCM CONNECTOR FOR POOR CONNECTION** • Turn the ignition switch off. • Disconnect PCM connector. • Check for poor connection (such as damaged, pulled-out pins, and corrosion). • Is there any malfunction?	Yes	Repair or replace the terminal, then go to Step 14.
		No	Go to the next step.
9	**INSPECT NEUTRAL SWITCH SIGNAL CIRCUIT FOR OPEN CIRCUIT** • Turn the ignition switch off. • Check continuity between neutral switch terminal B and PCM terminal 2X. • Is there continuity?	Yes	Go to Step 14.
		No	Repair or replace harness for open circuit, then go to Step 14.
10	**INSPECT NEUTRAL SWITCH CONNECTOR FOR POOR CONNECTION** • Turn the ignition switch off. • Disconnect neutral switch connector. • Check for poor connection (such as damaged, pulled-out pins, and corrosion). • Is there any malfunction?	Yes	Repair or replace the terminal, then go to Step 14.
		No	Go to the next step.

STEP	INSPECTION		ACTION
11	**CLASSIFY NEUTRAL SWITCH OR CIRCUIT** • Connect WDS or equivalent to DLC-2. • Access CPP/PNP PID. • Verify that CPP/PNP PID changes from ON to OFF when neutral switch connector is disconnected. • Does CPP/PNP PID change from ON to OFF?	Yes	Go to the next step.
		No	Go to Step 13.
12	**INSPECT NEUTRAL SWITCH** • Inspect neutral switch. (See 01–40C–24 NEUTRAL SWITCH INSPECTION [AJ].) • Is there any malfunction?	Yes	Replace neutral switch, then go to Step 14. (See 05–15B–4 NEUTRAL SWITCH REMOVAL/ INSTALLATION [A65M-R].)
		No	Go to Step 14.
13	**INSPECT NEUTRAL SWITCH SIGNAL CIRCUIT FOR SHORT TO GROUND** • Turn the ignition switch off. • Check continuity between neutral switch terminal B and body ground. • Is there continuity?	Yes	Repair or replace harness for short to ground, then go to the next step.
		No	Go to the next step.
14	**VERIFY TROUBLESHOOTING OF DTC P0850 COMPLETED** • Make sure to reconnect all disconnected connectors. • Start engine. • Clear the DTC from the PCM memory using the WDS or equivalent. • Operate clutch pedal when driving vehicle **30 km/h {18.6 mph} or below 10 times** alternately. • Is PENDING CODE same as DTC present?	Yes	Replace PCM, then go to the next step. (See 01–40C–5 PCM REMOVAL/INSTALLATION [AJ].)
		No	Go to the next step.
15	**VERIFY AFTER REPAIR PROCEDURE** • Perform "AFTER REPAIR PROCEDURE". (See 01–02C–7 AFTER REPAIR PROCEDURE [AJ].) • Are any DTCs present?	Yes	Go to the applicable DTC inspection. (See 01–02C–13 DTC TABLE [AJ].)
		No	Troubleshooting completed.

DTC P2088 [AJ]

E6U010200000W81

DTC P2088	OCV actuator (RH) circuit low
DETECTION CONDITION	• The PCM monitors the OCV (RH) voltage. if the PCM detects that the OCV control voltage (calculated from OCV) is below the threshold voltage (calculated from battery positive voltage), the PCM determines that the OCV circuit has a malfunction. **Diagnostic support note** • This is a continuous monitor (CCM). • MIL illuminates if the PCM detects the above malfunction condition during the first drive cycle. • FREEZE FRAME DATA is available. • DTC is stored in PCM memory.
POSSIBLE CAUSE	• OCV (RH) malfunction • Connector or terminal malfunction • Open circuit between main relay terminal C and OCV (RH) terminal B • Short to ground circuit between OCV (RH) terminal A and PCM terminal 2M • Open circuit between OCV (RH) terminal A and PCM terminal 2M • PCM malfunction

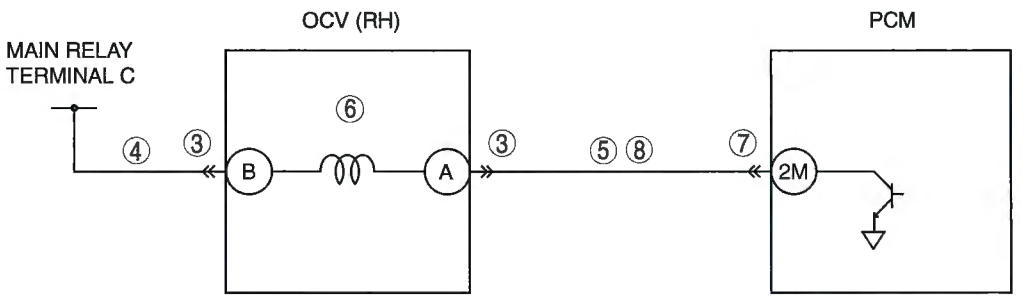

OCV (RH)
HARNESS SIDE CONNECTOR

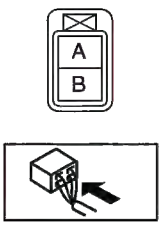

PCM
WIRING HARNESS-SIDE CONNECTOR

2BE	2BA	2AW	2AS	2AO	2AK	2AG	2AC	2Y	2U	2Q	2M	2I	2E	2A
2BF	2BB	2AX	2AT	2AP	2AL	2AH	2AD	2Z	2V	2R	2N	2J	2F	2B
2BG	2BC	2AY	2AU	2AQ	2AM	2AI	2AE	2AA	2W	2S	2O	2K	2G	2C
2BH	2BD	2AZ	2AV	2AR	2AN	2AJ	2AF	2AB	2X	2T	2P	2L	2H	2D

Diagnostic procedure

STEP	INSPECTION		ACTION
1	**VERIFY FREEZE FRAME DATA HAS BEEN RECORDED** • Has FREEZE FRAME DATA been recorded?	Yes	Go to the next step.
		No	Record FREEZE FRAME DATA on repair order, then go to the next step.
2	**VERIFY RELATED REPAIR INFORMATION AVAILABILITY** • Check for related Service Bulletins and/or on-line repair information availability. • Is any related repair information available?	Yes	Perform repair or diagnosis according to the available repair information. • If the vehicle is not repaired, go to the next step.
		No	Go to the next step.
3	**INSPECT OCV (RH) CONNECTOR FOR POOR CONNECTION** • Turn the ignition switch off. • Disconnect OCV (RH) connector. • Check for poor connection (such as damaged, pulled-out pins, and corrosion). • Is there any malfunction?	Yes	Repair or replace the terminal, then go to Step 9.
		No	Go to the next step.
4	**INSPECT OCV (RH) POWER CIRCUIT FOR OPEN CIRCUIT** • Turn the ignition switch to the ON position. • Measure voltage between OCV (RH) terminal B and body ground. • Is voltage **B+**?	Yes	Go to the next step.
		No	Repair or replace harness for open circuit, then go to Step 9.
5	**INSPECT OCV (RH) CONTROL CIRCUIT FOR SHORT TO GROUND** • Turn the ignition switch off. • Disconnect OCV (RH) connector. • Check continuity between OCV (RH) terminal A and body ground. • Is there continuity?	Yes	Repair or replace harness for short to ground, then go to Step 9.
		No	Go to the next step.
6	**INSPECT OCV (RH)** • Inspect OCV (RH). (See 01–10C–42 OIL CONTROL VALVE (OCV) INSPECTION [AJ].) • Is there any malfunction?	Yes	Replace OCV (RH), then go to Step 9. (See 01–10C–41 OIL CONTROL VALVE (OCV) REMOVAL/INSTALLATION [AJ].)
		No	Go to the next step.
7	**INSPECT PCM CONNECTOR FOR POOR CONNECTION** • Turn the ignition switch off. • Disconnect PCM connector. • Check for poor connection (such as damaged, pulled-out pins, and corrosion). • Is there any malfunction?	Yes	Repair or replace the terminal, then go to Step 9.
		No	Go to the next step.
8	**INSPECT OCV (RH) CONTROL CIRCUIT FOR OPEN CIRCUIT** • Turn the ignition switch off. • Check continuity between OCV (RH) terminal A and PCM terminal 2M. • Is there continuity?	Yes	Go to the next step.
		No	Repair or replace harness for open circuit, then go to the next step.
9	**VERIFY TROUBLESHOOTING OF DTC P2088 COMPLETED** • Make sure to reconnect all disconnected connectors. • Clear DTC from PCM memory using WDS or equivalent. • Perform the KOEO or KOER SELF TEST using the WDS or equivalent. (See 01–02C–8 KOEO/KOER SELF TEST [AJ].) • Is the PENDING CODE same DTC present?	Yes	Replace PCM, then go to the next step. (See 01–40C–5 PCM REMOVAL/INSTALLATION [AJ].)
		No	Go to the next step.
10	**VERIFY AFTER REPAIR PROCEDURE** • Perform "AFTER REPAIR PROCEDURE". (See 01–02C–7 AFTER REPAIR PROCEDURE [AJ].) • Are any DTCs present?	Yes	Go to the applicable DTC inspection. (See 01–02C–13 DTC TABLE [AJ].)
		No	Troubleshooting completed.

DTC P2089 [AJ]

E6U010200000W82

DTC P2089	OCV actuator (RH) circuit high
DETECTION CONDITION	• The PCM monitors the OCV (RH) voltage. If the PCM detects that the OCV control voltage (calculated from OCV) is above the threshold voltage (calculated from battery positive voltage), the PCM determines that the OCV circuit has a malfunction. **Diagnostic support note** • This is a continuous monitor (CCM). • MIL illuminates if the PCM detects the above malfunction condition during the first drive cycle. • FREEZE FRAME DATA is available. • DTC is stored in PCM memory.
POSSIBLE CAUSE	• OCV (RH) malfunction • Connector or terminal malfunction • Short to power circuit between OCV (RH) terminal A and PCM terminal 2M • PCM malfunction

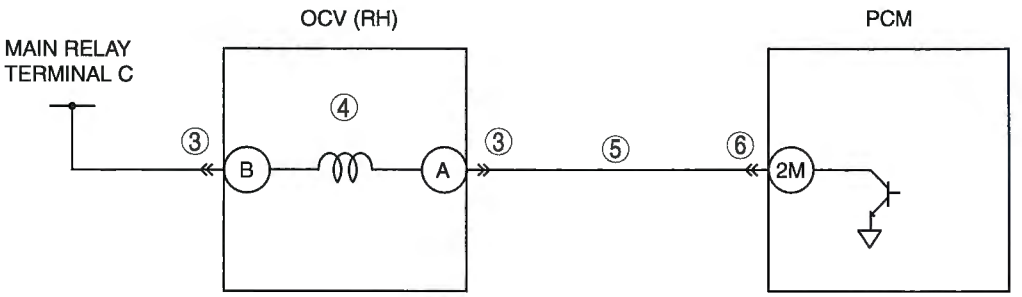

OCV (RH)
HARNESS SIDE CONNECTOR

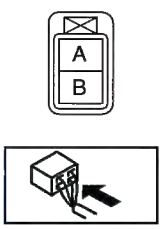

PCM
WIRING HARNESS-SIDE CONNECTOR

2BE	2BA	2AW	2AS	2AO	2AK	2AG	2AC	2Y	2U	2Q	2M	2I	2E	2A
2BF	2BB	2AX	2AT	2AP	2AL	2AH	2AD	2Z	2V	2R	2N	2J	2F	2B
2BG	2BC	2AY	2AU	2AQ	2AM	2AI	2AE	2AA	2W	2S	2O	2K	2G	2C
2BH	2BD	2AZ	2AV	2AR	2AN	2AJ	2AF	2AB	2X	2T	2P	2L	2H	2D



Diagnostic procedure

STEP	INSPECTION		ACTION
1	**VERIFY FREEZE FRAME DATA HAS BEEN RECORDED** • Has FREEZE FRAME DATA been recorded?	Yes	Go to the next step.
		No	Record FREEZE FRAME DATA on repair order, then go to the next step.
2	**VERIFY RELATED REPAIR INFORMATION AVAILABILITY** • Check for related Service Bulletins and/or on-line repair information availability. • Is any related repair information available?	Yes	Perform repair or diagnosis according to the available repair information. • If the vehicle is not repaired, go to the next step.
		No	Go to the next step.
3	**INSPECT OCV (RH) CONNECTOR FOR POOR CONNECTION** • Turn the ignition switch off. • Disconnect OCV (RH) connector. • Check for poor connection (such as damaged, pulled-out pins, and corrosion). • Is there any malfunction?	Yes	Repair or replace the terminal, then go to Step 7.
		No	Go to the next step.
4	**INSPECT OCV (RH)** • Inspect OCV (RH). (See 01–10C–42 OIL CONTROL VALVE (OCV) INSPECTION [AJ].) • Is there any malfunction?	Yes	Replace OCV (RH), then go to Step 7. (See 01–10C–41 OIL CONTROL VALVE (OCV) REMOVAL/INSTALLATION [AJ].)
		No	Go to the next step.
5	**INSPECT OCV (RH) CONTROL CIRCUIT FOR SHORT TO POWER** • Turn the ignition switch to the ON position. • Measure voltage between OCV (RH) terminal A and body ground. • Is voltage **B+**?	Yes	Repair or replace harness for short to power, then go to Step 7.
		No	Go to the next step.
6	**INSPECT PCM CONNECTOR FOR POOR CONNECTION** • Turn the ignition switch off. • Disconnect PCM connector. • Check for poor connection (such as damaged, pulled-out pins, and corrosion). • Is there any malfunction?	Yes	Repair or replace the terminal, then go to the next step.
		No	Go to the next step.
7	**VERIFY TROUBLESHOOTING OF DTC P2089 COMPLETED** • Make sure to reconnect all disconnected connectors. • Clear DTC from PCM memory using WDS or equivalent. • Perform the KOEO or KOER SELF TEST using the WDS or equivalent. (See 01–02C–8 KOEO/KOER SELF TEST [AJ].) • Is the PENDING CODE same DTC present?	Yes	Replace PCM, then go to the next step. (See 01–40C–5 PCM REMOVAL/INSTALLATION [AJ].)
		No	Go to the next step.
8	**VERIFY AFTER REPAIR PROCEDURE** • Perform "AFTER REPAIR PROCEDURE". (See 01–02C–7 AFTER REPAIR PROCEDURE [AJ].) • Are any DTCs present?	Yes	Go to the applicable DTC inspection. (See 01–02C–13 DTC TABLE [AJ].)
		No	Troubleshooting completed.

DTC P2092 [AJ]

E6U010200000W83

DTC P2092	OCV actuator (LH) circuit low
DETECTION CONDITION	• The PCM monitors the OCV (LH) voltage. If the PCM detects that the OCV control voltage (calculated from OCV) is below the threshold voltage (calculated from battery positive voltage), the PCM determines that the OCV circuit has a malfunction. **Diagnostic support note** • This is a continuous monitor (CCM). • MIL illuminates if the PCM detects the above malfunction condition during the first drive cycle. • FREEZE FRAME DATA is available. • DTC is stored in PCM memory.
POSSIBLE CAUSE	• OCV (LH) malfunction • Connector or terminal malfunction • Open circuit between main relay terminal C and OCV (LH) terminal B • Short to ground circuit between OCV (LH) terminal A and PCM terminal 2N • Open circuit between OCV (LH) terminal A and PCM terminal 2N • PCM malfunction

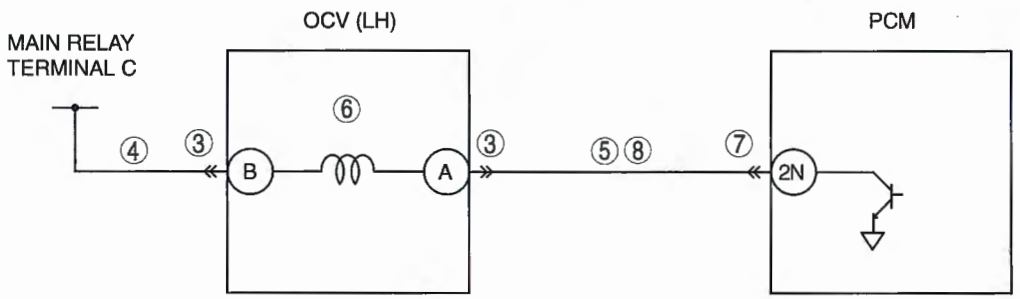

OCV (LH)
HARNESS SIDE CONNECTOR

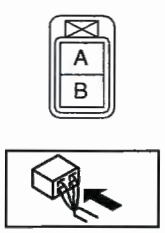

PCM
WIRING HARNESS-SIDE CONNECTOR

2BE	2BA	2AW	2AS	2AO	2AK	2AG	2AC	2Y	2U	2Q	2M	2I	2E	2A
2BF	2BB	2AX	2AT	2AP	2AL	2AH	2AD	2Z	2V	2R	2N	2J	2F	2B
2BG	2BC	2AY	2AU	2AQ	2AM	2AI	2AE	2AA	2W	2S	2O	2K	2G	2C
2BH	2BD	2AZ	2AV	2AR	2AN	2AJ	2AF	2AB	2X	2T	2P	2L	2H	2D

Diagnostic procedure

STEP	INSPECTION		ACTION
1	**VERIFY FREEZE FRAME DATA HAS BEEN RECORDED** • Has FREEZE FRAME DATA been recorded?	Yes	Go to the next step.
		No	Record FREEZE FRAME DATA on repair order, then go to the next step.
2	**VERIFY RELATED REPAIR INFORMATION AVAILABILITY** • Check for related Service Bulletins and/or on-line repair information availability. • Is any related repair information available?	Yes	Perform repair or diagnosis according to the available repair information. • If the vehicle is not repaired, go to the next step.
		No	Go to the next step.
3	**INSPECT OCV (LH) CONNECTOR FOR POOR CONNECTION** • Turn the ignition switch off. • Disconnect OCV (LH) connector. • Check for poor connection (such as damaged, pulled-out pins, and corrosion.). • Is there any malfunction?	Yes	Repair or replace the terminal, then go to Step 9.
		No	Go to the next step.
4	**INSPECT OCV (LH) POWER CIRCUIT FOR OPEN CIRCUIT** • Turn the ignition switch to the ON position. • Measure voltage between OCV (LH) terminal B and body ground. • Is voltage **B+**?	Yes	Go to the next step.
		No	Repair or replace harness for open circuit, then go to Step 9.
5	**INSPECT OCV (LH) CONTROL CIRCUIT FOR SHORT TO GROUND** • Turn the ignition switch off. • Disconnect OCV (LH) connector. • Check continuity between OCV (LH) terminal A and body ground. • Is there continuity?	Yes	Repair or replace harness for short to ground, then go to Step 9.
		No	Go to the next step.
6	**INSPECT OCV (LH)** • Inspect OCV (LH). (See 01–10C–42 OIL CONTROL VALVE (OCV) INSPECTION [AJ].) • Is there any malfunction?	Yes	Replace OCV (LH), then go to Step 9. (See 01–10C–41 OIL CONTROL VALVE (OCV) REMOVAL/INSTALLATION [AJ].)
		No	Go to the next step.
7	**INSPECT PCM CONNECTOR FOR POOR CONNECTION** • Turn the ignition switch off. • Disconnect PCM connector. • Check for poor connection (such as damaged, pulled-out pins, and corrosion). • Is there any malfunction?	Yes	Repair or replace the terminal, then go to Step 9.
		No	Go to the next step.
8	**INSPECT OCV (LH) CONTROL CIRCUIT FOR OPEN CIRCUIT** • Turn the ignition switch off. • Check continuity between OCV (LH) terminal A and PCM terminal 2N. • Is there continuity?	Yes	Go to the next step.
		No	Repair or replace harness for open circuit, then go to the next step.
9	**VERIFY TROUBLESHOOTING OF DTC P2092 COMPLETED** • Make sure to reconnect all disconnected connectors. • Clear DTC from PCM memory using WDS or equivalent. • Perform the KOEO or KOER SELF TEST using the WDS or equivalent. (See 01–02C–8 KOEO/KOER SELF TEST [AJ].) • Is the PENDING CODE same DTC present?	Yes	Replace PCM, then go to the next step. (See 01–40C–5 PCM REMOVAL/INSTALLATION [AJ].)
		No	Go to the next step.
10	**VERIFY AFTER REPAIR PROCEDURE** • Perform "AFTER REPAIR PROCEDURE". (See 01–02C–7 AFTER REPAIR PROCEDURE [AJ].) • Are any DTCs present?	Yes	Go to the applicable DTC inspection. (See 01–02C–13 DTC TABLE [AJ].)
		No	Troubleshooting completed.

DTC P2093 [AJ]

E6U010200000W84

DTC P2093	OCV actuator (LH) circuit high
DETECTION CONDITION	• The PCM monitors the OCV (LH) voltage. If the PCM detects that the OCV control voltage (calculated from OCV) is above the threshold voltage (calculated from battery positive voltage), the PCM determines that the OCV circuit has a malfunction. **Diagnostic support note** • This is a continuous monitor (CCM). • MIL illuminates if the PCM detects the above malfunction condition during the first drive cycle. • FREEZE FRAME DATA is available. • DTC is stored in PCM memory.
POSSIBLE CAUSE	• OCV (LH) malfunction • Connector or terminal malfunction • Short to power circuit between OCV (LH) terminal A and PCM terminal 2N • PCM malfunction

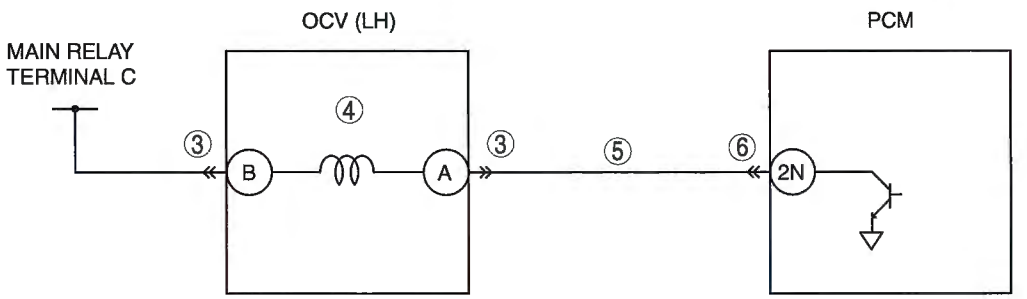

OCV (LH)
HARNESS SIDE CONNECTOR

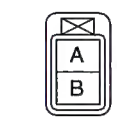

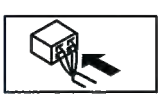

PCM
WIRING HARNESS-SIDE CONNECTOR

2BE	2BA	2AW	2AS	2AO	2AK	2AG	2AC	2Y	2U	2Q	2M	2I	2E	2A
2BF	2BB	2AX	2AT	2AP	2AL	2AH	2AD	2Z	2V	2R	2N	2J	2F	2B
2BG	2BC	2AY	2AU	2AQ	2AM	2AI	2AE	2AA	2W	2S	2O	2K	2G	2C
2BH	2BD	2AZ	2AV	2AR	2AN	2AJ	2AF	2AB	2X	2T	2P	2L	2H	2D

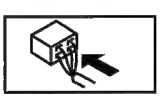

Diagnostic procedure

STEP	INSPECTION		ACTION
1	**VERIFY FREEZE FRAME DATA HAS BEEN RECORDED** • Has FREEZE FRAME DATA been recorded?	Yes	Go to the next step.
		No	Record FREEZE FRAME DATA on repair order, then go to the next step.
2	**VERIFY RELATED REPAIR INFORMATION AVAILABILITY** • Check for related Service Bulletins and/or on-line repair information availability. • Is any related repair information available?	Yes	Perform repair or diagnosis according to the available repair information. • If the vehicle is not repaired, go to the next step.
		No	Go to the next step.
3	**INSPECT OCV (LH) CONNECTOR FOR POOR CONNECTION** • Turn the ignition switch off. • Disconnect OCV (LH) connector. • Check for poor connection (such as damaged, pulled-out pins, and corrosion). • Is there any malfunction?	Yes	Repair or replace the terminal, then go to Step 7.
		No	Go to the next step.
4	**INSPECT OCV (LH)** • Inspect OCV (LH). (See 01–10C–42 OIL CONTROL VALVE (OCV) INSPECTION [AJ].) • Is there any malfunction?	Yes	Replace OCV (LH), then go to Step 7. (See 01–10C–41 OIL CONTROL VALVE (OCV) REMOVAL/INSTALLATION [AJ].)
		No	Go to the next step.

STEP	INSPECTION		ACTION
5	**INSPECT OCV (LH) CONTROL CIRCUIT FOR SHORT TO POWER** • Turn the ignition switch to the ON position. • Measure voltage between OCV (LH) terminal A and body ground. • Is voltage **B+**?	Yes	Repair or replace harness for short to power, then go to Step 7.
		No	Go to the next step.
6	**INSPECT PCM CONNECTOR FOR POOR CONNECTION** • Turn the ignition switch off. • Disconnect PCM connector. • Check for poor connection (such as damaged, pulled-out pins, and corrosion). • Is there any malfunction?	Yes	Repair or replace the terminal, then go to the next step.
		No	Go to the next step.
7	**VERIFY TROUBLESHOOTING OF DTC P2093 COMPLETED** • Make sure to reconnect all disconnected connectors. • Clear DTC from PCM memory using WDS or equivalent. • Perform the KOEO or KOER SELF TEST using the WDS or equivalent. (See 01–02C–8 KOEO/KOER SELF TEST [AJ].) • Is the PENDING CODE same DTC present?	Yes	Replace PCM, then go to the next step. (See 01–40C–5 PCM REMOVAL/INSTALLATION [AJ].)
		No	Go to the next step.
8	**VERIFY AFTER REPAIR PROCEDURE** • Perform "AFTER REPAIR PROCEDURE". (See 01–02C–7 AFTER REPAIR PROCEDURE [AJ].) • Are any DTCs present?	Yes	Go to the applicable DTC inspection. (See 01–02C–13 DTC TABLE [AJ].)
		No	Troubleshooting completed.

DTC P2096, P2098 [AJ]

E6U010200000

DTC P2096 DTC P2098	**Target A/F feedback system too lean (Right bank)** **Target A/F feedback system too lean (Left bank)**
DETECTION CONDITION	• The PCM monitors the target A/F fuel trim when under the target A/F feedback control. If the fuel trim is more than the specification, the PCM determines that the target A/F feedback system too lean. **MONITORING CONDITION** — Rear HO2S voltage is **above 0.1 V** **Diagnostic support note** • This is a continuous monitor. (Fuel system) • MIL illuminates if the PCM detects the above malfunctioning condition in two consecutive drive cycles or in one drive cycle while the DTC for the same malfunction has been stored in the PCM. • PENDING CODE is available if the PCM detects the above malfunction conditions during the first drive cycle. • FREEZE FRAME DATA is available. • DTC is stored in the PCM memory.
POSSIBLE CAUSE	• Leakage exhaust gas • HO2S (RR, LR) malfunction • IAT sensor malfunction • ECT sensor malfunction • Air suction in intake-air system • HO2S (RF, LF) malfunction • MAF sensor malfunction • Insufficient fuel line pressure • Fuel pump unit malfunction • Leakage fuel • Improper operation ignition system • Insufficient engine compression • Fuel injector malfunction • PCM malfunction

Diagnostic procedure

STEP	INSPECTION		ACTION
1	**VERIFY FREEZE FRAME DATA AND DIAGNOSTIC MONITORING TEST RESULTS HAVE BEEN RECORDED** • Have FREEZE FRAME DATA and DIAGNOSTIC MONITORING TEST RESULTS (Fuel system related) been recorded?	Yes	Go to the next step.
		No	Record FREEZE FRAME DATA and DIAGNOSTIC MONITORING TEST RESULTS on repair order, then go to the next step.
2	**VERIFY RELATED REPAIR INFORMATION AVAILABILITY** • Verify related Service Bulletins and/or on-line repair information availability. • Is any related repair information available?	Yes	Perform repair or diagnosis according to the available repair information. • If the vehicle is not repaired, go to the next step.
		No	Go to the next step.
3	**VERIFY RELATED PENDING CODE OR STORED DTC** • Turn the ignition switch off, then ON position (Engine off). • Verify the related PENDING CODE or stored DTCs using the WDS or equivalent. • Is the DTC P2177 or P2187 (with P2096), P2179 or P2189 (with P2098) also present?	Yes	Go to appropriate DTC troubleshooting procedure. (See 01–02C–13 DTC TABLE [AJ].)
		No	Go to the next step.
4	**IDENTIFY TRIGGER DTC FOR FREEZE FRAME DATA** • Is DTC P2096 or P2098 on FREEZE FRAME DATA?	Yes	Go to the next step.
		No	Go to troubleshooting for DTC on FREEZE FRAME DATA. (See 01–02C–13 DTC TABLE [AJ].)
5	**VERIFY CURRENT INPUT SIGNAL STATUS OF REAR HO2S** • Start the engine and warm it up completely. • Access O2S12 (with P2096) or O2S22 (with P2098) PID using the WDS or equivalent. • Read O2S12 or O2S22 PID under following accelerator pedal condition (in PARK). • Is PID reading normal? — **More than 0.45 V** when accelerator pedal is suddenly depressed (rich condition). — **Less than 0.45 V** just after release of accelerator pedal (lean condition).	Yes	Go to the next step.
		No	Visually inspect for the exhaust gas leakage between TWC and rear HO2S. • If there is no leakage, replace rear HO2S. (See 01–15C–2 EXHAUST SYSTEM REMOVAL/ INSTALLATION [AJ].) Then go to Step 16.
6	**VERIFY CURRENT INPUT SIGNAL STATUS (KEY TO ON/IDLE)** • Access APP1, APP2, ECT, MAF, TP and VSS PIDs using the WDS or equivalent. • Is there any signal that is far out of specification when ignition switch is ON and engine runs?	Yes	Inspect suspected sensor and excessive resistance in related wiring harnesses. Repair if necessary. Then go to Step 16.
		No	Go to the next step.
7	**VERIFY CURRENT INPUT SIGNAL STATUS UNDER TROUBLE CONDITION** • Inspect same PIDs as Step 6 while simulating FREEZE FRAME DATA condition. • Is there any signal which causes drastic changes?	Yes	Inspect suspected sensor and excessive resistance in related wiring harnesses. Repair if necessary. Then go to Step 16.
		No	Go to the next step.
8	**VERIFY CURRENT INPUT SIGNAL STATUS OF FRONT HO2S** • Start the engine and warm it up completely. • Access O2S11 (with P2096) or O2S21 (with P2098) PID using the WDS or equivalent. • Read O2S11 or O2S21 PID under following accelerator pedal condition (in PARK). • Is PID reading normal? — **More than 0.45 V** when accelerator pedal is suddenly depressed (rich condition). — **Less than 0.45 V** just after release of accelerator pedal (lean condition).	Yes	Go to the next step.
		No	Visually inspect for the exhaust gas leakage between exhaust manifold and front HO2S. • If there is no leakage, replace front HO2S. (See 01–15C–2 EXHAUST SYSTEM REMOVAL/ INSTALLATION [AJ].) Then go to Step 16.

STEP	INSPECTION		ACTION
9	**VERIFY CURRENT INPUT SIGNAL STATUS OF MAF SENSOR** • Start the engine. • Access the MAF PID using the WDS or equivalent. • Verify that the MAF PID changes quickly according to engine speed. • Is the PID normal?	Yes	Go to the next step.
		No	Replace MAF/IAT sensor, then go to Step 16.
10	**INSPECT INTAKE AIR SYSTEM FOR EXCESSIVE AIR SUCTION** • Visually inspect for loosen, cracks or damages hose in intake-air system. • Is there any malfunction?	Yes	Repair or replace the malfunctioning part, then go to Step 16.
		No	Go to the next step.
11	**INSPECT FUEL LINE PRESSURE** • Perform the "FUEL LINE PRESSURE INSPECTION". (See 01–14A–7 FUEL LINE PRESSURE INSPECTION [L3, AJ].) • Is there any malfunction?	Yes	Go to the next step.
		No	Go to Step 13.
12	**INSPECT FUEL SYSTEM FOR FUEL LEAKAGE** • Visually inspect fuel leakage in the fuel system. • Is there fuel leakage?	Yes	Repair or replace the malfunctioning part, then go to Step 16.
		No	Replace the fuel pump unit, then go to Step 16. (See 01–14A–13 FUEL PUMP UNIT REMOVAL/ INSTALLATION [L3, AJ].)
13	**INSPECT IGNITION SYSTEM** • Carry out spark test for right bank cylinders (with P2096) or left bank cylinders (with P2098). (See 01–03C–68 Spark Test.) • Is strong blue spark visible at each cylinder?	Yes	Go to the next step.
		No	Repair or replace malfunctioning part according to spark test result. Then go to Step 16.
14	**INSPECT ENGINE COMPRESSION** • Inspect the engine compression for right bank cylinders (with P2096) or left bank cylinders (with P2098). (See 01–10C–6 COMPRESSION INSPECTION [AJ].) • Is there any malfunction?	Yes	Go to the next step.
		No	Overhaul engine, then go to Step 16.
15	**INSPECT FUEL INJECTOR** • Inspect fuel injector for right bank cylinders (with P2096) or left bank cylinders (with P2098). (See 01–14A–32 FUEL INJECTOR INSPECTION [AJ].) • Is there any malfunction?	Yes	Replace suspected fuel injector, then go to the next step. (See 01–14A–27 FUEL INJECTOR REMOVAL/ INSTALLATION [AJ].)
		No	Go to the next step.
16	**VERIFY TROUBLESHOOTING OF DTC P2096 AND P2098 COMPLETED** • Make sure to reconnect all disconnected connectors. • Clear the DTC from the PCM memory using the WDS or equivalent. • Perform the DRIVE MODE. • Stop vehicle and access ON BOARD READINESS TEST to inspect drive mode completion status. • Verify FUEL_EVAL PID changes to yes. — If not, perform the DRIVE MODE again. • Is the PENDING CODE same DTC present?	Yes	Replace PCM, then go to the next step. (See 01–40C–5 PCM REMOVAL/INSTALLATION [AJ].)
		No	Go to the next step.
17	**VERIFY AFTER REPAIR PROCEDURE** • Perform the "After Repair Procedure". (See 01–02C–7 AFTER REPAIR PROCEDURE [AJ].) • Are any DTCs present?	Yes	Go to the applicable DTC inspection. (See 01–02C–13 DTC TABLE [AJ].)
		No	Troubleshooting completed.

DTC P2097, P2099 [AJ]

E6U010200000W86

DTC P2097 DTC P2099	**Target A/F feedback system too rich (Right bank)** **Target A/F feedback system too rich (Left bank)**
DETECTION CONDITION	• The PCM monitors the target A/F fuel trim when under the target A/F feedback control. If the fuel trim is less than specification, the PCM determines that the target A/F feedback system is too rich. **Diagnostic support note** • This is a continuous monitor. (Fuel system) • MIL illuminates if the PCM detects the above malfunctioning condition in two consecutive drive cycles or in one drive cycle while the DTC for the same malfunction has been stored in the PCM. • PENDING CODE is available if the PCM detects the above malfunction conditions during the first drive cycle. • FREEZE FRAME DATA is available. • DTC is stored in the PCM memory.
POSSIBLE CAUSE	• Leakage exhaust gas • HO2S (RR, LR) malfunction • IAT sensor malfunction • ECT sensor malfunction • HO2S (RF, LF) malfunction • Excessive fuel line pressure • Fuel pump unit malfunction • Purge solenoid valve malfunction • Insufficient engine compression • PCM malfunction

Diagnostic procedure

STEP	INSPECTION		ACTION
1	**VERIFY FREEZE FRAME DATA AND DIAGNOSTIC MONITORING TEST RESULTS HAVE BEEN RECORDED** • Have FREEZE FRAME DATA and DIAGNOSTIC MONITORING TEST RESULTS (Fuel system related) been recorded?	Yes	Go to the next step.
		No	Record FREEZE FRAME DATA and DIAGNOSTIC MONITORING TEST RESULTS on repair order, then go to the next step.
2	**VERIFY RELATED REPAIR INFORMATION AVAILABILITY** • Verify related Service Bulletins and/or on-line repair information availability. • Is any related repair information available?	Yes	Perform repair or diagnosis according to the available repair information. • If the vehicle is not repaired, go to the next step.
		No	Go to the next step.
3	**VERIFY RELATED PENDING CODE OR STORED DTC** • Turn the ignition switch off, then ON position (Engine off). • Verify the related PENDING CODE or stored DTCs using the WDS or equivalent. • Is the DTC P2178 or P2188 (with P2097), P2180 or P2190 (with P2099) also present?	Yes	Go to appropriate DTC troubleshooting procedure. (See 01–02C–13 DTC TABLE [AJ].)
		No	Go to the next step.
4	**IDENTIFY TRIGGER DTC FOR FREEZE FRAME DATA** • Is DTC P2097 or P2099 on FREEZE FRAME DATA?	Yes	Go to the next step.
		No	Go to troubleshooting for DTC on FREEZE FRAME DATA. (See 01–02C–13 DTC TABLE [AJ].)
5	**VERIFY CURRENT INPUT SIGNAL STATUS OF REAR HO2S** • Start the engine and warm it up completely. • Access O2S12 (with P2097) or O2S22 (with P2099) PID WDS or equivalent. • Read O2S12 or O2S22 PID under following accelerator pedal condition (in PARK). • Is PID reading normal? — **More than 0.45 V** when accelerator pedal is suddenly depressed (rich condition). — **Less than 0.45 V** just after release of accelerator pedal (lean condition).	Yes	Go to the next step.
		No	Visually inspect for the exhaust gas leakage between TWC and rear HO2S. • If there is no leakage, replace rear HO2S. (See 01–15C–2 EXHAUST SYSTEM REMOVAL/ INSTALLATION [AJ].) Then go to Step 11.

STEP	INSPECTION		ACTION
6	**VERIFY CURRENT INPUT SIGNAL STATUS (KEY TO ON/IDLE)** • Access APP1, APP2, ECT, MAF, TP and VSS PIDs using the WDS or equivalent. • Is there any signal that is far out of specification when ignition switch is ON and engine runs?	Yes	Inspect suspected sensor and excessive resistance in related wiring harnesses. Repair or if necessary. Then go to Step 11.
		No	Go to the next step.
7	**VERIFY CURRENT INPUT SIGNAL STATUS UNDER TROUBLE CONDITION** • Inspect same PIDs as Step 6 while simulating FREEZE FRAME DATA condition. • Is there any signal which causes drastic changes?	Yes	Inspect suspected sensor and excessive resistance in related wiring harnesses. Repair or if necessary. Then go to Step 11.
		No	Go to the next step.
8	**VERIFY CURRENT INPUT SIGNAL STATUS OF FRONT HO2S** • Start the engine and warm it up completely. • O2S11 (with P2097) or O2S21 (with P2099) PID using the WDS or equivalent. • Read O2S11 or O2S21 PID under following accelerator pedal condition (in PARK (ATX) or NEUTRAL (MTX)). • Is PID reading normal? — **More than 0.45 V** when accelerator pedal is suddenly depressed (rich condition). — **Less than 0.45 V** just after release of accelerator pedal (lean condition).	Yes	Go to the next step.
		No	Visually inspect for the exhaust gas leakage between exhaust manifold and front HO2S. • If there is no leakage, replace front HO2S. (See 01–15C–2 EXHAUST SYSTEM REMOVAL/ INSTALLATION [AJ].) Then go to Step 11.
9	**INSPECT FUEL LINE PRESSURE** • Perform the "FUEL LINE PRESSURE INSPECTION". (See 01–14A–7 FUEL LINE PRESSURE INSPECTION [L3, AJ].) • Is there any malfunction?	Yes	Replace the fuel pump unit, then go to Step 11. (See 01–14A–13 FUEL PUMP UNIT REMOVAL/ INSTALLATION [L3, AJ].)
		No	Go to the next step.
10	**INSPECT LONG TERM FUEL TRIM** • Access LONGFT1 (with P2097) or LONGFT2 (with P2099) PID using the WDS or equivalent. • Compare the LONGFT1 PID with recorded FREEZE FRAME DATA at Step1. • Is the LONGFT1 or LONGFT2 PID above FREEZE FRAME DATA?	Yes	Inspect purge solenoid valve. (See 01–16A–13 PURGE SOLENOID VALVE INSPECTION [L3, AJ].) • If there is any malfunction, replace purge solenoid valve. (See 01–13C–2 VACUUM HOSE ROUTING DIAGRAM [AJ].) Then go to Step 11.
		No	Go to the next step.
11	**VERIFY TROUBLESHOOTING OF DTC P2097 AND P2099 COMPLETED** • Make sure to reconnect all disconnected connectors. • Clear the DTC from the PCM memory using the WDS or equivalent. • Perform the DRIVE MODE. • Stop vehicle and access ON BOARD READINESS TEST to inspect drive mode completion status. • Verify FUEL_EVAL PID changes to yes. — If not, perform the DRIVE MODE again • Is the PENDING CODE same DTC present?	Yes	Replace PCM, then go to the next step. (See 01–40C–5 PCM REMOVAL/INSTALLATION [AJ].)
		No	Go to the next step.
12	**VERIFY AFTER REPAIR PROCEDURE** • Perform the "After Repair Procedure". (See 01–02C–7 AFTER REPAIR PROCEDURE [AJ].) • Are any DTCs present?	Yes	Go to the applicable DTC inspection. (See 01–02C–13 DTC TABLE [AJ].)
		No	Troubleshooting completed.

DTC P2101 [AJ]

E6U010200000W87

DTC P2101	Throttle actuator control motor circuit range/performance
DETECTION CONDITION	• The PCM monitors the input voltage from the drive-by-wire relay when the PCM turns the drive-by-wire relay on. If the input voltage is **less than 5.0 V**, the PCM determines that the drive-by-wire relay control circuit voltage is low. • The PCM monitors the input voltage from the drive-by-wire relay when the PCM turns the drive-by-wire relay off. If the input voltage is **more than 5.0 V**, the PCM determines that the drive-by-wire relay control circuit voltage is high. **Diagnostic support note** • This is a continuous monitor. (CCM) • MIL illuminates if the PCM detects the above malfunction conditions during the first drive cycle. • FREEZE FRAME DATA is available. • The DTC is stored in the PCM memory.
POSSIBLE CAUSE	• drive-by-wire relay and related circuit malfunction • Main relay and related circuit malfunction • Throttle position sensor No.1 and related circuit malfunction • Throttle position sensor No.2 and related circuit malfunction • PCM malfunction

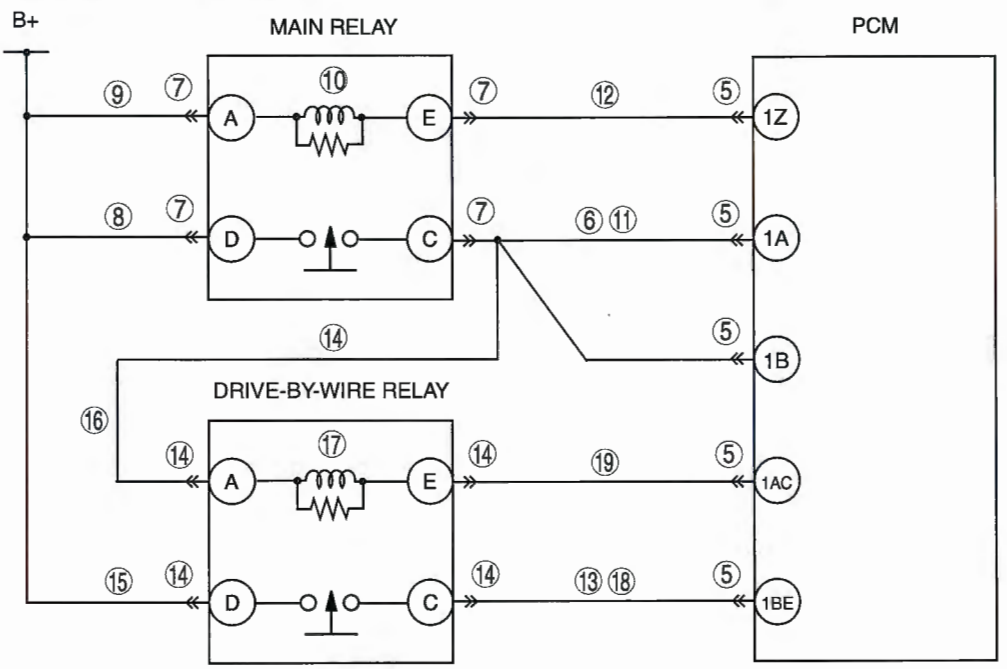

MAIN RELAY

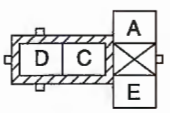

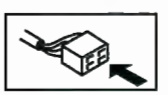

DRIVE-BY-WIRE RELAY

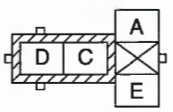

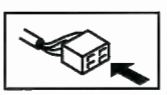

PCM
WIRING HARNESS-SIDE CONNECTOR

1BE	1BA	1AW	1AS	1AO	1AK	1AG	1AC	1Y	1U	1Q	1M	1I	1E	1A
1BF	1BB	1AX	1AT	1AP	1AL	1AH	1AD	1Z	1V	1R	1N	1J	1F	1B
1BG	1BC	1AY	1AU	1AQ	1AM	1AI	1AE	1AA	1W	1S	1O	1K	1G	1C
1BH	1BD	1AZ	1AV	1AR	1AN	1AJ	1AF	1AB	1X	1T	1P	1L	1H	1D



Diagnostic procedure

STEP	INSPECTION		ACTION
1	**VERIFY FREEZE FRAME DATA HAS BEEN RECORDED** • Has FREEZE FRAME DATA been recorded?	Yes	Go to the next step.
		No	Record FREEZE FRAME DATA on repair order, then go to the next step.
2	**VERIFY RELATED REPAIR INFORMATION AVAILABILITY** • Check for related Service Bulletins and/or on-line repair information availability. • Is any related repair information available?	Yes	Perform repair or diagnosis according to the available repair information. • If the vehicle is not repaired, go to the next step.
		No	Go to the next step.
3	**VERIFY RELATED PENDING AND STORED DTCS** • Turn ignition switch to OFF, then ON (Engine off). • Verify pending and stored DTCs using the WDS or equivalent. • Is any DTC present?	Yes	Go to appropriate DTC troubleshooting procedure.
		No	Go to the next step.
4	**IDENTIFY TRIGGER DTC FOR FREEZE FRAME DATA** • Is DTC P2101 on FREEZE FRAME DATA?	Yes	Go to the next step.
		No	Go to troubleshooting procedures for DTC on FREEZE FRAME DATA.
5	**INSPECT PCM CONNECTOR FOR POOR CONNECTION** • Turn the ignition switch off. • Disconnect PCM connector. • Inspect for poor connection (such as damaged, pulled out terminals, corrosion). • Is there any malfunction?	Yes	Repair or replace the terminal, then go to Step 22.
		No	Go to the next step.
6	**INSPECT MAIN RELAY OUTPUT VOLTAGE** • Turn the ignition switch off. • Connect PCM connector. • Turn ignition switch to ON (Engine off). • Measure voltage between PCM terminal 1A and body ground. • Is voltage **B+**?	Yes	Go to Step 13.
		No	Go to the next step.
7	**INSPECT MAIN RELAY CONNECTOR FOR POOR CONNECTION** • Turn the ignition switch off. • Disconnect main relay. • Inspect for poor connection (such as damaged, pulled out terminals, corrosion). • Is there any malfunction?	Yes	Repair or replace the terminal, then go to Step 22.
		No	Go to the next step.
8	**INSPECT POWER SUPPLY OF MAIN RELAY** • Turn ignition switch to ON (Engine off). • Measure voltage between main relay terminal D and body ground. • Is voltage **B+**?	Yes	Go to the next step.
		No	Repair or replace harness for open circuit, then go to Step 22.
9	**INSPECT POWER SUPPLY FOR CONTROL CIRCUIT OF MAIN RELAY** • Turn ignition switch to ON (Engine off). • Measure voltage between main relay terminal A and body ground. • Is voltage **B+**?	Yes	Go to the next step.
		No	Repair or replace harness for open circuit, then go to Step 22.
10	**INSPECT MAIN RELAY** • Inspect main relay. (See 09–21–7 RELAY INSPECTION.) • Is main relay normal?	Yes	Go to the next step.
		No	Replace main relay, then go to Step 22.
11	**INSPECT POWER CIRCUIT FOR OPEN CIRCUIT** • Turn the ignition switch off. • Disconnect main relay and PCM connector. • Check continuity between main relay terminal C and PCM terminal 1A. • Is there continuity?	Yes	Go to the next step.
		No	Repair or replace harness for open circuit, then go to Step 22.
12	**INSPECT CONTROL CIRCUIT FOR OPEN CIRCUIT** • Check continuity between main relay terminal E and PCM terminal 1Z. • Is there continuity?	Yes	Go to the next step.
		No	Repair or replace harness for open circuit, then go to Step 22.

STEP	INSPECTION		ACTION
13	**INSPECT DRIVE-BY-WIRE RELAY OUTPUT VOLTAGE** • Turn ignition switch to ON (Engine off). • Measure voltage between PCM terminal 1BE and body ground. • Is voltage **B+**?	Yes	Go to the next step.
		No	Repair or replace harness for short to power supply, then go to Step 22.
14	**INSPECT POOR CONNECTION OF DRIVE-BY-WIRE RELAY CONNECTOR** • Turn the ignition switch off. • Disconnect drive-by-wire relay. • Check drive-by-wire relay connector for poor connection (such as damaged, pulled out terminals, corrosion). • Is there any malfunction?	Yes	Repair or replace the terminal, then go to Step 22.
		No	Go to the next step.
15	**INSPECT POWER SUPPLY OF DRIVE-BY-WIRE RELAY** • Turn ignition switch to ON (Engine off). • Measure voltage between drive-by-wire relay terminal D and body ground.	Yes	Go to the next step.
		No	Repair or replace harness for open circuit, then go to Step 22.
16	**INSPECT POWER SUPPLY FOR CONTROL CIRCUIT OF DRIVE-BY-WIRE RELAY** • Turn ignition switch to ON (Engine off). • Measure voltage between drive-by-wire relay terminal A and body ground. • Is voltage **B+**?	Yes	Go to the next step.
		No	Repair or replace harness for open circuit between drive-by-wire relay terminal A and main relay terminal C, then go to Step 22.
17	**INSPECT DRIVE-BY-WIRE RELAY** • Inspect drive-by-wire relay. (See 09–21–7 RELAY INSPECTION.) • Is drive-by-wire relay normal?	Yes	Go to the next step.
		No	Replace drive-by-wire relay, then go to Step 22.
18	**INSPECT POWER CIRCUIT FOR OPEN CIRCUIT** • Turn the ignition switch off. • Check continuity between drive-by-wire relay terminal C and PCM terminal 1BE. • Is there continuity?	Yes	Go to the next step.
		No	Repair or replace harness for open circuit, then go to Step 22.
19	**INSPECT CONTROL CIRCUIT FOR OPEN CIRCUIT** • Check continuity between drive-by-wire relay E and PCM terminal 1AC.	Yes	Go to the next step.
		No	Repair or replace harness for open circuit, then go to Step 22.
20	**INSPECT THROTTLE POSITION SENSOR NO.1 OUTPUT VOLTAGE** • Turn the ignition switch off. • Connect PCM connector. • Turn ignition switch to ON (Engine off). • Check voltage between PCM terminal 2AM and body ground. • Is voltage **0.40—0.60 V**?	Yes	Go to the next step.
		No	Check throttle position sensor No.1 and related circuits and terminal. (See 01–40C–28 THROTTLE POSITION (TP) SENSOR INSPECTION [AJ].) Repair or replace if necessary, then go to Step 22.
21	**INSPECT THROTTLE POSITION SENSOR NO.2 OUTPUT VOLTAGE** • Turn ignition switch to ON (Engine off). • Check voltage between PCM terminal 2AI and body ground. • Is voltage **4.40—4.60 V**?	Yes	Go to the next step.
		No	Check throttle position sensor No.2 and related circuits and terminal. (See 01–40C–28 THROTTLE POSITION (TP) SENSOR INSPECTION [AJ].) Repair or replace as necessary, then go to the next step.
22	**VERIFY TROUBLESHOOTING OF DTC P2101 COMPLETED** • Make sure to reconnect all disconnected connectors. • Clear DTC from PCM memory using WDS or equivalent. • Perform the KOER SELF TEST using the WDS or equivalent. (See 01–02C–8 KOEO/KOER SELF TEST [AJ].) • Is the PENDING CODE same DTC present?	Yes	Replace PCM, then go to the next step. (See 01–40C–5 PCM REMOVAL/INSTALLATION [AJ].)
		No	Go to the next step.
23	**VERIFY AFTER REPAIR PROCEDURE** • Perform the "After Repair Procedure". (See 01–02C–7 AFTER REPAIR PROCEDURE [AJ].) • Is any DTC present?	Yes	Go to the applicable DTC inspection. (See 01–02C–13 DTC TABLE [AJ].)
		No	Troubleshooting completed.

DTC P2107 [AJ]

E6U010200000W88

DTC P2107	Throttle actuator control module processor problem
DETECTION CONDITION	• Throttle actuator control module internal processor error **Diagnostic support note** • This is a continuous monitor (CCM). • MIL illuminates if the PCM detects the above malfunction condition during the first drive cycle. • FREEZE FRAME DATA is available. • The DTC is stored in the PCM memory.
POSSIBLE CAUSE	• Throttle actuator control module internal processor malfunction

Diagnostic procedure

STEP	INSPECTION		ACTION
1	**VERIFY FREEZE FRAME DATA HAS BEEN RECORDED** • Has FREEZE FRAME DATA been recorded?	Yes	Go to the next step.
		No	Record the FREEZE FRAME DATA on the repair order, then go to the next step.
2	**VERIFY RELATED REPAIR INFORMATION AVAILABILITY** • Verify related Service Bulletins and/or on-line repair information availability. • Is any related repair information available?	Yes	Perform repair or diagnosis according to the available repair information. • If the vehicle is not repaired, go to the next step.
		No	Go to the next step.
3	**VERIFY TROUBLESHOOTING OF DTC P2107 COMPLETED** • Make sure to reconnect all disconnected connectors. • Clear DTC from PCM memory using WDS or equivalent. • Perform the KOER SELF TEST using the WDS or equivalent. (See 01–02C–8 KOEO/KOER SELF TEST [AJ].) • Is the PENDING CODE same DTC present?	Yes	Replace the PCM, then go to the next step. (See 01–40C–5 PCM REMOVAL/INSTALLATION [AJ].)
		No	Go to the next step.
4	**VERIFY AFTER REPAIR PROCEDURE** • Perform the "AFTER REPAIR PROCEDURE". (See 01–02C–7 AFTER REPAIR PROCEDURE [AJ].) • Is any DTC present?	Yes	Go to the applicable DTC inspection. (See 01–02C–13 DTC TABLE [AJ].)
		No	DTC troubleshooting completed.

DTC P2108 [AJ]

E6U010200000W89

DTC P2108	Throttle actuator control module performance problem
DETECTION CONDITION	• Throttle actuator control module internal communication error • PCM internal communication error • APP sensor internal communication error • PCM has internal abnormalities **Diagnostic support note** • This is a continuous monitor (CCM). • PCM has internal abnormalities • MIL illuminates if the PCM detects the above malfunction condition during the first drive cycle. • FREEZE FRAME DATA is available. • The DTC is stored in the PCM memory.
POSSIBLE CAUSE	• Throttle actuator control module malfunction • PCM malfunction • APP sensor malfunction

Diagnostic procedure

STEP	INSPECTION		ACTION
1	**VERIFY FREEZE FRAME DATA HAS BEEN RECORDED** • Has FREEZE FRAME DATA been recorded?	Yes	Go to the next step.
		No	Record the FREEZE FRAME DATA on the repair order, then go to the next step.
2	**VERIFY RELATED REPAIR INFORMATION AVAILABILITY** • Verify related Service Bulletins and/or on-line repair information availability. • Is any related repair information available?	Yes	Perform repair or diagnosis according to the available repair information. • If the vehicle is not repaired, go to the next step.
		No	Go to the next step.
3	**VERIFY TROUBLESHOOTING OF DTC P2108 COMPLETED** • Make sure to reconnect all disconnected connectors. • Clear DTC from PCM memory using WDS or equivalent. • Perform the KOER SELF TEST using the WDS or equivalent. (See 01–02C–8 KOEO/KOER SELF TEST [AJ].) • Is the PENDING CODE same DTC present?	Yes	Replace the PCM, then go to the next step. (See 01–40C–5 PCM REMOVAL/INSTALLATION [AJ].)
		No	Go to the next step.
4	**VERIFY AFTER REPAIR PROCEDURE** • Perform the "AFTER REPAIR PROCEDURE". (See 01–02C–7 AFTER REPAIR PROCEDURE [AJ].) • Is any DTC present?	Yes	Go to the applicable DTC inspection. (See 01–02C–13 DTC TABLE [AJ].)
		No	DTC troubleshooting completed.

DTC P2109 [AJ]

E6U010200000W90

DTC P2109	TP sensor minimum stop range/performance problem
DETECTION CONDITION	• The PCM monitors the minimum TP when the closed TP learning is completed. If the TP is **less than 2.34%** or **more than 18.9%**, the PCM determines that there is a TP sensor minimum stop range/ performance problem. **Diagnostic support note** • This is a continuous monitor (CCM). • MIL illuminates if the PCM detects the above malfunction condition during the first drive cycle. • FREEZE FRAME DATA is available. • The DTC is stored in the PCM memory.
POSSIBLE CAUSE	• Throttle actuator malfunction • Throttle valve malfunction • PCM malfunction

Diagnostic procedure

STEP	INSPECTION		ACTION
1	**VERIFY FREEZE FRAME DATA HAS BEEN RECORDED** • Has FREEZE FRAME DATA been recorded?	Yes	Go to the next step.
		No	Record the FREEZE FRAME DATA on the repair order, then go to the next step.
2	**VERIFY RELATED REPAIR INFORMATION AVAILABILITY** • Verify related Service Bulletins and/or on-line repair information availability. • Is any related repair information available?	Yes	Perform repair or diagnosis according to the available repair information. • If the vehicle is not repaired, go to the next step.
		No	Go to the next step.
3	**INSPECT THROTTLE ACTUATOR** • Inspect the throttle actuator. (See 01–13C–6 THROTTLE ACTUATOR INSPECTION [AJ].) • Is there any malfunction?	Yes	Replace the throttle body, then go to Step 5. (See 01–13C–2 INTAKE AIR SYSTEM REMOVAL/ INSTALLATION [AJ], 01–13C–2 INTAKE AIR SYSTEM REMOVAL/INSTALLATION [AJ].)
		No	Go to the next step.
4	**INSPECT THROTTLE VALVE** • Inspect the throttle valve. (See 01–13C–6 THROTTLE ACTUATOR INSPECTION [AJ].) • Is there any malfunction?	Yes	Replace the throttle body, then go to the next step. (See 01–13C–2 INTAKE AIR SYSTEM REMOVAL/ INSTALLATION [AJ], 01–13C–2 INTAKE AIR SYSTEM REMOVAL/INSTALLATION [AJ].)
		No	Go to the next step.
5	**VERIFY TROUBLESHOOTING OF DTC P2109 COMPLETED** • Make sure to reconnect all disconnected connectors. • Clear DTC from PCM memory using WDS or equivalent. • Perform the KOER SELF TEST using the WDS or equivalent. (See 01–02C–8 KOEO/KOER SELF TEST [AJ].) • Is the PENDING CODE same DTC present?	Yes	Replace the PCM, then go to the next step. (See 01–40C–5 PCM REMOVAL/INSTALLATION [AJ].)
		No	Go to the next step.
6	**VERIFY AFTER REPAIR PROCEDURE** • Perform the "AFTER REPAIR PROCEDURE". (See 01–02C–7 AFTER REPAIR PROCEDURE [AJ].) • Is any DTC present?	Yes	Go to the applicable DTC inspection. (See 01–02C–13 DTC TABLE [AJ].)
		No	DTC troubleshooting completed.

DTC P2112 [AJ]

E6U010200000W91

DTC P2112	Throttle actuator control system range/performance problem
DETECTION CONDITION	• The PCM monitors the throttle actuator control duty ratio when the engine is running. If the duty ratio is **more than 95%**, the PCM determines that there is a throttle actuator control system range/performance problem. **Diagnostic support note** • This is a continuous monitor (CCM). • MIL illuminates if the PCM detects the above malfunction condition during the first drive cycle. • FREEZE FRAME DATA is available. • The DTC is stored in the PCM memory.
POSSIBLE CAUSE	• Throttle actuator control module malfunction

Diagnostic procedure

STEP	INSPECTION		ACTION
1	**VERIFY FREEZE FRAME DATA HAS BEEN RECORDED** • Has FREEZE FRAME DATA been recorded?	Yes	Go to the next step.
		No	Record the FREEZE FRAME DATA on the repair order, then go to the next step.
2	**VERIFY RELATED REPAIR INFORMATION AVAILABILITY** • Verify related Service Bulletins and/or on-line repair information availability. • Is any related repair information available?	Yes	Perform repair or diagnosis according to the available repair information. • If the vehicle is not repaired, go to the next step.
		No	Go to the next step.
3	**VERIFY TROUBLESHOOTING OF DTC P2112 COMPLETED** • Make sure to reconnect all disconnected connectors. • Clear DTC from PCM memory using WDS or equivalent. • Perform the KOER SELF TEST using the WDS or equivalent. (See 01–02C–8 KOEO/KOER SELF TEST [AJ].) • Is the PENDING CODE same DTC present?	Yes	Replace the PCM, then go to the next step. (See 01–40C–5 PCM REMOVAL/INSTALLATION [AJ].)
		No	Go to the next step.
4	**VERIFY AFTER REPAIR PROCEDURE** • Perform the "AFTER REPAIR PROCEDURE". (See 01–02C–7 AFTER REPAIR PROCEDURE [AJ].) • Is any DTC present?	Yes	Go to the applicable DTC inspection. (See 01–02C–13 DTC TABLE [AJ].)
		No	DTC troubleshooting completed.

DTC P2119 [AJ]

E6U010200000W92

DTC P2119	Throttle actuator control throttle body range/performance problem
DETECTION CONDITION	• The PCM compares the actual TP with initial setting TP when the engine is running. If the difference is les than the specification, the PCM determines that there is a throttle actuator control circuit range/ performance problem. **Diagnostic support note** • This is a continuous monitor (CCM). • MIL illuminates if the PCM detects the above malfunction condition in two consecutive drive cycles or in one drive cycle while the DTC for the same malfunction has been stored in the PCM. • PENDING CODE is available if the PCM detects the above malfunction condition during the first drive cycle. • FREEZE FRAME DATA is available. • The DTC is stored in the PCM memory.
POSSIBLE CAUSE	• Throttle actuator malfunction • Throttle valve malfunction • PCM malfunction

Diagnostic procedure

STEP	INSPECTION		ACTION
1	**VERIFY FREEZE FRAME DATA HAS BEEN RECORDED** • Has FREEZE FRAME DATA been recorded?	Yes	Go to the next step.
		No	Record the FREEZE FRAME DATA on the repair order, then go to the next step.
2	**VERIFY RELATED REPAIR INFORMATION AVAILABILITY** • Verify related Service Bulletins and/or on-line repair information availability. • Is any related repair information available?	Yes	Perform repair or diagnosis according to the available repair information. • If the vehicle is not repaired, go to the next step.
		No	Go to the next step.
3	**INSPECT THROTTLE ACTUATOR** • Inspect the throttle actuator. (See 01–13C–6 THROTTLE ACTUATOR INSPECTION [AJ].) • Is there any malfunction?	Yes	Replace the throttle body, then go to Step 5. (See 01–13C–2 INTAKE AIR SYSTEM REMOVAL/ INSTALLATION [AJ].)
		No	Go to the next step.
4	**INSPECT THROTTLE VALVE** • Inspect the throttle valve. (See 01–13C–6 THROTTLE ACTUATOR INSPECTION [AJ].) • Is there any malfunction?	Yes	Replace the throttle body, then go to the next step. (See 01–13C–2 INTAKE AIR SYSTEM REMOVAL/ INSTALLATION [AJ].)
		No	Go to the next step.
5	**VERIFY TROUBLESHOOTING OF DTC P2119 COMPLETED** • Make sure to reconnect all disconnected connectors. • Clear DTC from PCM memory using WDS or equivalent. • Perform the KOER SELF TEST using the WDS or equivalent. (See 01–02C–8 KOEO/KOER SELF TEST [AJ].) • Is the PENDING CODE same DTC present?	Yes	Replace the PCM, then go to the next step. (See 01–40C–5 PCM REMOVAL/INSTALLATION [AJ].)
		No	Go to the next step.
6	**VERIFY AFTER REPAIR PROCEDURE** • Perform the "AFTER REPAIR PROCEDURE". (See 01–02C–7 AFTER REPAIR PROCEDURE [AJ].) • Is any DTC present?	Yes	Go to the applicable DTC inspection. (See 01–02C–13 DTC TABLE [AJ].)
		No	DTC troubleshooting completed.

DTC P2122 [AJ]

E6U010200000W93

DTC P2122	APP sensor No.1 circuit low input
DETECTION CONDITION	• The PCM monitors the APP sensor No.1 signal at PCM terminal 1AO. If the PCM detects APP sensor No.1 voltage of **0.35 V or below**, the PCM determines that the APP sensor No.1 circuit has a malfunction. **Diagnostic support note** • This is a continuous monitor (CCM). • MIL illuminates if the PCM detects the above malfunction condition during the first drive cycle. • FREEZE FRAME DATA is available. • DTC is stored in the PCM memory.
POSSIBLE CAUSE	• APP sensor No.1 malfunction • Connector or terminal malfunction • Open circuit between APP sensor terminal D and PCM terminal 1AR • Short to ground circuit between APP sensor terminal D and PCM terminal 1AR • Short to ground circuit between APP sensor terminal F and PCM terminal 1AO • Open circuit between APP sensor terminal F and PCM terminal 1AO • PCM malfunction

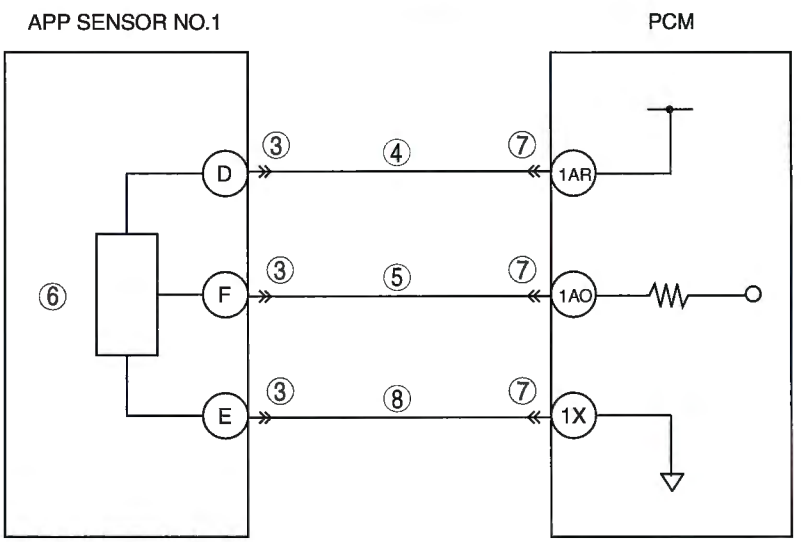

APP SENSOR
HARNESS SIDE CONNECTOR

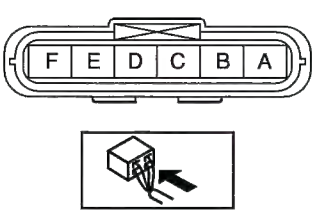

PCM
WIRING HARNESS-SIDE CONNECTOR

1BE	1BA	1AW	1AS	1AO	1AK	1AG	1AC	1Y	1U	1Q	1M	1I	1E	1A
1BF	1BB	1AX	1AT	1AP	1AL	1AH	1AD	1Z	1V	1R	1N	1J	1F	1B
1BG	1BC	1AY	1AU	1AQ	1AM	1AI	1AE	1AA	1W	1S	1O	1K	1G	1C
1BH	1BD	1AZ	1AV	1AR	1AN	1AJ	1AF	1AB	1X	1T	1P	1L	1H	1D

Diagnostic procedure

STEP	INSPECTION		ACTION
1	**VERIFY FREEZE FRAME DATA HAS BEEN RECORDED** • Has FREEZE FRAME DATA been recorded?	Yes	Go to the next step.
		No	Record FREEZE FRAME DATA on repair order, then go to the next step.
2	**VERIFY RELATED REPAIR INFORMATION AVAILABILITY** • Check for related Service Bulletins and/or on-line repair information availability. • Is any related repair information available?	Yes	Perform repair or diagnosis according to the available repair information. • If the vehicle is not repaired, go to the next step.
		No	Go to the next step.
3	**INSPECT APP SENSOR CONNECTOR FOR POOR CONNECTION** • Turn the ignition switch off. • Disconnect APP sensor connector. • Check for poor connection (such as damaged, pulled-out pins, and corrosion). • Is there any malfunction?	Yes	Repair or replace the terminal, then go to Step 9.
		No	Go to the next step.
4	**INSPECT APP SENSOR NO.1 POWER CIRCUIT FOR OPEN CIRCUIT** • Turn the ignition switch to the ON position. • Measure voltage between APP sensor terminal D and body ground. • Is voltage **within 4.5—5.5 V**?	Yes	Go to the next step.
		No	Repair or replace harness for open circuit, then go to Step 9.
5	**VERIFY APP SENSOR NO.1 SIGNAL CIRCUIT FOR SHORT TO GROUND** • Turn the ignition switch off. • Check continuity between APP sensor terminal F and body ground. • Is there continuity?	Yes	Repair or replace harness, then go to Step 9.
		No	Go to the next step.
6	**INSPECT APP SENSOR NO.1** • Inspect APP sensor No.1. (See 01–40C–26 ACCELERATOR PEDAL POSITION (APP) SENSOR INSPECTION [AJ].) • Is there any malfunction?	Yes	Replace accelerator pedal, then go to Step 9. (See 01–13C–7 ACCELERATOR PEDAL REMOVAL/INSTALLATION [AJ].)
		No	Go to the next step.
7	**INSPECT PCM CONNECTOR FOR POOR CONNECTION** • Turn the ignition switch off. • Disconnect PCM connector. • Check for poor connection (such as damaged, pulled-out pins, and corrosion). • Is there any malfunction?	Yes	Repair or replace the terminal, then go to Step 9.
		No	Go to the next step.
8	**VERIFY APP SENSOR NO.1 SIGNAL CIRCUIT FOR OPEN CIRCUIT** • Turn the ignition switch off. • Check continuity between APP sensor terminal F and PCM terminal 1X. • Is there continuity?	Yes	Go to the next step.
		No	Repair or replace harness for open circuit, then go to the next step.
9	**VERIFY TROUBLESHOOTING OF DTC P2122 COMPLETED** • Make sure to reconnect all disconnected connectors. • Clear DTC from PCM memory using WDS or equivalent. • Perform the KOEO or KOER SELF TEST using the WDS or equivalent. (See 01–02C–8 KOEO/KOER SELF TEST [AJ].) • Is the PENDING CODE same DTC present?	Yes	Replace PCM, then go to the next step. (See 01–40C–5 PCM REMOVAL/INSTALLATION [AJ].)
		No	Go to the next step.
10	**VERIFY AFTER REPAIR PROCEDURE** • Perform "AFTER REPAIR PROCEDURE". (See 01–02C–7 AFTER REPAIR PROCEDURE [AJ].) • Are any DTCs present?	Yes	Go to the applicable DTC inspection. (See 01–02C–13 DTC TABLE [AJ].)
		No	Troubleshooting completed.

DTC P2123 [AJ]

E6U010200000W94

DTC P2123	APP sensor No.1 circuit high input
DETECTION CONDITION	• The PCM monitors the APP sensor No.1 signal at PCM terminal 1AO. If the PCM detects APP sensor No.1 voltage of **4.8 V or above**, the PCM determines that the APP sensor No.1 circuit has a malfunction. **Diagnostic support note** • This is a continuous monitor (CCM). • MIL illuminates if the PCM detects the above malfunction condition during the first drive cycle. • FREEZE FRAME DATA is available. • DTC is stored in the PCM memory.
POSSIBLE CAUSE	• APP sensor No.1 malfunction • Connector or terminal malfunction • Short to power circuit between APP sensor terminal F and PCM terminal 1AO • Open circuit between APP sensor terminal E and PCM terminal 1X • PCM malfunction

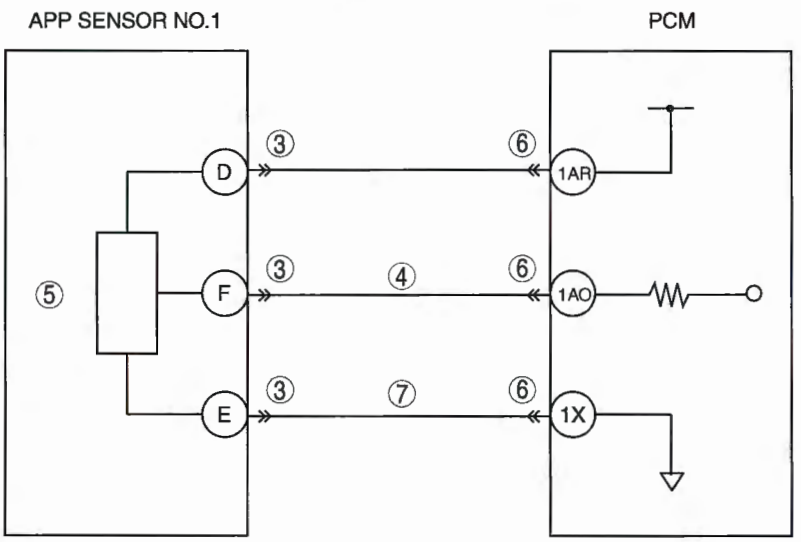

APP SENSOR
HARNESS SIDE CONNECTOR

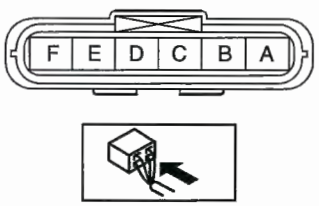

PCM
WIRING HARNESS-SIDE CONNECTOR

1BE	1BA	1AW	1AS	1AO	1AK	1AG	1AC	1Y	1U	1Q	1M	1I	1E	1A
1BF	1BB	1AX	1AT	1AP	1AL	1AH	1AD	1Z	1V	1R	1N	1J	1F	1B
1BG	1BC	1AY	1AU	1AQ	1AM	1AI	1AE	1AA	1W	1S	1O	1K	1G	1C
1BH	1BD	1AZ	1AV	1AR	1AN	1AJ	1AF	1AB	1X	1T	1P	1L	1H	1D

Diagnostic procedure

STEP	INSPECTION		ACTION
1	**VERIFY FREEZE FRAME DATA HAS BEEN RECORDED** • Has FREEZE FRAME DATA been recorded?	Yes	Go to the next step.
		No	Record FREEZE FRAME DATA on repair order, then go to the next step.
2	**VERIFY RELATED REPAIR INFORMATION AVAILABILITY** • Check for related Service Bulletins and/or on-line repair information availability. • Is any related repair information available?	Yes	Perform repair or diagnosis according to the available repair information. • If the vehicle is not repaired, go to the next step.
		No	Go to the next step.
3	**INSPECT APP SENSOR CONNECTOR FOR POOR CONNECTION** • Turn the ignition switch off. • Disconnect APP sensor connector. • Check for poor connection (such as damaged, pulled-out pins, and corrosion). • Is there any malfunction?	Yes	Repair or replace the terminal, then go to Step 8.
		No	Go to the next step.
4	**INSPECT APP SENSOR NO.1 SIGNAL CIRCUIT FOR SHORT TO POWER** • Turn the ignition switch to the ON position. • Measure voltage between APP sensor terminal F and body ground. • Is voltage **B+**?	Yes	Repair or replace harness for short to power, then go to Step 8.
		No	Go to the next step.
5	**INSPECT APP SENSOR NO.1** • Inspect APP sensor No.1. (See 01–40C–26 ACCELERATOR PEDAL POSITION (APP) SENSOR INSPECTION [AJ].) • Is there any malfunction?	Yes	Replace accelerator pedal, then go to Step 8. (See 01–13C–7 ACCELERATOR PEDAL REMOVAL/INSTALLATION [AJ].)
		No	Go to the next step.
6	**INSPECT PCM CONNECTOR FOR POOR CONNECTION** • Turn the ignition switch off. • Disconnect PCM connector. • Check for poor connection (such as damaged, pulled-out pins, and corrosion). • Is there any malfunction?	Yes	Repair or replace the terminal, then go to Step 8.
		No	Go to the next step.
7	**INSPECT APP SENSOR NO.1 GROUND CIRCUIT FOR OPEN CIRCUIT** • Turn the ignition switch off. • Check continuity between APP sensor terminal E and PCM terminal 1X. • Is there continuity?	Yes	Go to the next step.
		No	Repair or replace harness for open circuit, then go to the next step.
8	**VERIFY TROUBLESHOOTING OF DTC P2123 COMPLETED** • Make sure to reconnect all disconnected connectors. • Clear DTC from PCM memory using WDS or equivalent. • Perform the KOEO or KOER SELF TEST using the WDS or equivalent. (See 01–02C–8 KOEO/KOER SELF TEST [AJ].) • Is the PENDING CODE same DTC present?	Yes	Replace PCM, then go to the next step. (See 01–40C–5 PCM REMOVAL/INSTALLATION [AJ].)
		No	Go to the next step.
9	**VERIFY AFTER REPAIR PROCEDURE** • Perform "AFTER REPAIR PROCEDURE". (See 01–02C–7 AFTER REPAIR PROCEDURE [AJ].) • Are any DTCs present?	Yes	Go to the applicable DTC inspection. (See 01–02C–13 DTC TABLE [AJ].)
		No	Troubleshooting completed.

DTC P2127 [AJ]

E6U010200000W95

DTC P2127	APP sensor No.2 circuit low input
DETECTION CONDITION	• The PCM monitors the APP sensor No.2 signal at PCM terminal 1AP. If the PCM detects APP sensor No.2 voltage of **0.35 V or below**, the PCM determines that the APP sensor No.2 circuit has a malfunction. **Diagnostic support note** • This is a continuous monitor (CCM). • MIL illuminates if the PCM detects the above malfunction condition during the first drive cycle. • FREEZE FRAME DATA is available. • DTC is stored in the PCM memory.
POSSIBLE CAUSE	• APP sensor No.2 malfunction • Connector or terminal malfunction • Open circuit between APP sensor terminal A and PCM terminal 1AV • Short to ground circuit between APP sensor terminal A and PCM terminal 1AV • Open circuit between APP sensor terminal C and PCM terminal 1AP • Short to ground circuit between APP sensor terminal C and PCM terminal 1AP • PCM malfunction

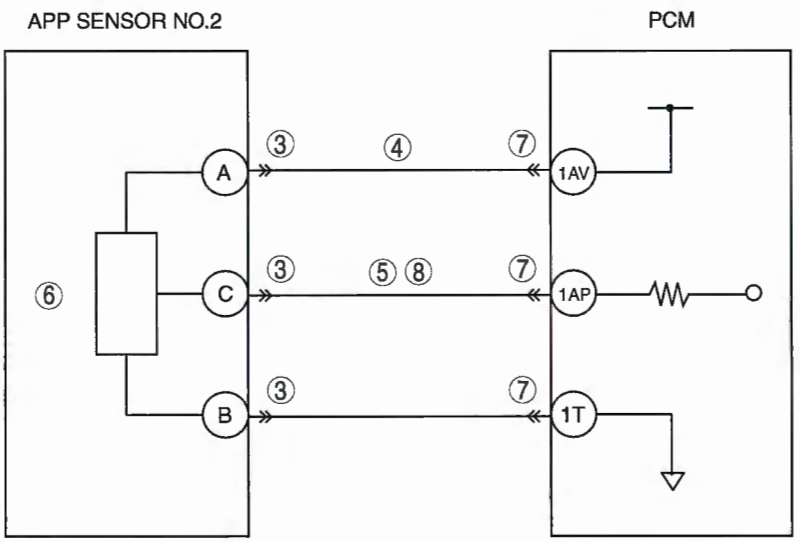

APP SENSOR
HARNESS SIDE CONNECTOR

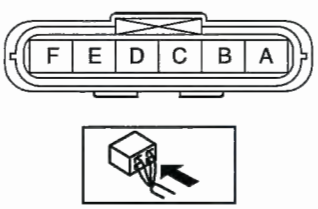

PCM
WIRING HARNESS-SIDE CONNECTOR

1BE	1BA	1AW	1AS	1AO	1AK	1AG	1AC	1Y	1U	1Q	1M	1I	1E	1A
1BF	1BB	1AX	1AT	1AP	1AL	1AH	1AD	1Z	1V	1R	1N	1J	1F	1B
1BG	1BC	1AY	1AU	1AQ	1AM	1AI	1AE	1AA	1W	1S	1O	1K	1G	1C
1BH	1BD	1AZ	1AV	1AR	1AN	1AJ	1AF	1AB	1X	1T	1P	1L	1H	1D

Diagnostic procedure

STEP	INSPECTION		ACTION
1	**VERIFY FREEZE FRAME DATA HAS BEEN RECORDED** • Has FREEZE FRAME DATA been recorded?	Yes	Go to the next step.
		No	Record FREEZE FRAME DATA on repair order, then go to the next step.
2	**VERIFY RELATED REPAIR INFORMATION AVAILABILITY** • Check for related Service Bulletins and/or on-line repair information availability. • Is any related repair information available?	Yes	Perform repair or diagnosis according to the available repair information. • If the vehicle is not repaired, go to the next step.
		No	Go to the next step.
3	**INSPECT APP SENSOR CONNECTOR FOR POOR CONNECTION** • Turn the ignition switch off. • Disconnect APP sensor connector. • Check for poor connection (such as damaged, pulled-out pins, and corrosion). • Is there any malfunction?	Yes	Repair or replace the terminal, then go to Step 9.
		No	Go to the next step.
4	**INSPECT APP SENSOR NO.2 POWER CIRCUIT FOR OPEN CIRCUIT** • Turn the ignition switch to the ON position. • Measure voltage between APP sensor terminal A and body ground. • Is voltage **within 4.5—5.5 V**?	Yes	Go to the next step.
		No	Repair or replace harness for open circuit, then go to Step 9.
5	**VERIFY APP SENSOR NO.2 SIGNAL CIRCUIT FOR SHORT TO GROUND** • Turn the ignition switch off. • Check continuity between APP sensor terminal C and body ground. • Is there continuity?	Yes	Repair or replace harness, then go to Step 9.
		No	Go to the next step.
6	**INSPECT APP SENSOR NO.2** • Inspect APP sensor No.2. (See 01–40C–26 ACCELERATOR PEDAL POSITION (APP) SENSOR INSPECTION [AJ].) • Is there any malfunction?	Yes	Replace accelerator pedal, then go to Step 9. (See 01–13C–7 ACCELERATOR PEDAL REMOVAL/INSTALLATION [AJ].)
		No	Go to the next step.
7	**INSPECT PCM CONNECTOR FOR POOR CONNECTION** • Turn the ignition switch off. • Disconnect PCM connector. • Check for poor connection (such as damaged, pulled-out pins, and corrosion). • Is there any malfunction?	Yes	Repair or replace the terminal, then go to Step 9.
		No	Go to the next step.
8	**VERIFY APP SENSOR NO.2 SIGNAL CIRCUIT FOR OPEN CIRCUIT** • Turn the ignition switch off. • Check continuity between APP sensor terminal C and PCM terminal 1AP. • Is there continuity?	Yes	Go to the next step.
		No	Repair or replace harness for open circuit, then go to the next step.
9	**VERIFY TROUBLESHOOTING OF DTC P2127 COMPLETED** • Make sure to reconnect all disconnected connectors. • Clear DTC from PCM memory using WDS or equivalent. • Perform the KOEO or KOER SELF TEST using the WDS or equivalent. (See 01–02C–8 KOEO/KOER SELF TEST [AJ].) • Is the PENDING CODE same DTC present?	Yes	Replace PCM, then go to the next step. (See 01–40C–5 PCM REMOVAL/INSTALLATION [AJ].)
		No	Go to the next step.
10	**VERIFY AFTER REPAIR PROCEDURE** • Perform "AFTER REPAIR PROCEDURE". (See 01–02C–7 AFTER REPAIR PROCEDURE [AJ].) • Are any DTCs present?	Yes	Go to the applicable DTC inspection. (See 01–02C–13 DTC TABLE [AJ].)
		No	Troubleshooting completed.

DTC P2128 [AJ]

E6U010200000W96

DTC P2128	APP sensor No.2 circuit high input
DETECTION CONDITION	• The PCM monitors the APP sensor No.2 signal at PCM terminal 1AP. If the PCM detects APP sensor No.2 voltage of **4.8 V or above**, the PCM determines that the APP sensor No.2 circuit has a malfunction. **Diagnostic support note** • This is a continuous monitor (CCM). • MIL illuminates if the PCM detects the above malfunction condition during the first drive cycle. • FREEZE FRAME DATA is available. • DTC is stored in the PCM memory.
POSSIBLE CAUSE	• APP sensor No.2 malfunction • Connector or terminal malfunction • Short to power circuit between APP sensor terminal C and PCM terminal 1AP • Open circuit between APP sensor terminal B and PCM terminal 1T • PCM malfunction

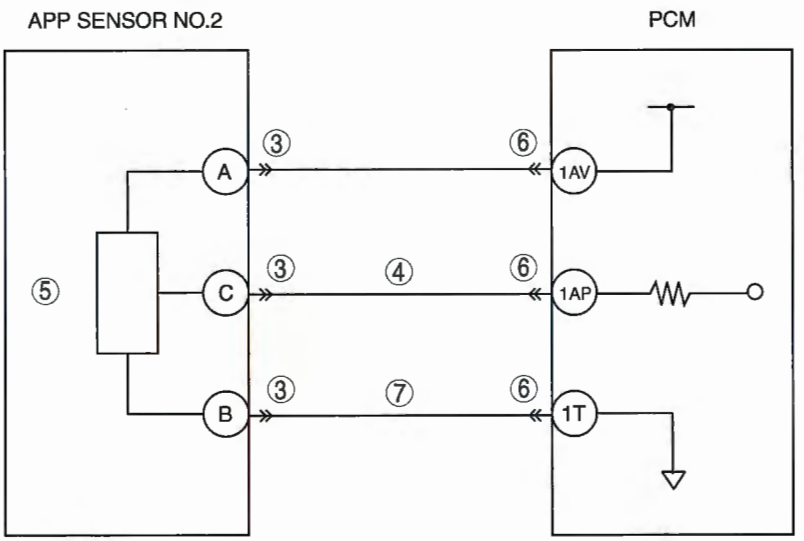

APP SENSOR
HARNESS SIDE CONNECTOR



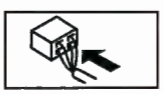

PCM
WIRING HARNESS-SIDE CONNECTOR

1BE	1BA	1AW	1AS	1AO	1AK	1AG	1AC	1Y	1U	1Q	1M	1I	1E	1A
1BF	1BB	1AX	1AT	1AP	1AL	1AH	1AD	1Z	1V	1R	1N	1J	1F	1B
1BG	1BC	1AY	1AU	1AQ	1AM	1AI	1AE	1AA	1W	1S	1O	1K	1G	1C
1BH	1BD	1AZ	1AV	1AR	1AN	1AJ	1AF	1AB	1X	1T	1P	1L	1H	1D

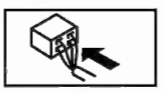

Diagnostic procedure

STEP	INSPECTION		ACTION
1	**VERIFY FREEZE FRAME DATA HAS BEEN RECORDED** • Has FREEZE FRAME DATA been recorded?	Yes	Go to the next step.
		No	Record FREEZE FRAME DATA on repair order, then go to the next step.
2	**VERIFY RELATED REPAIR INFORMATION AVAILABILITY** • Check for related Service Bulletins and/or on-line repair information availability. • Is any related repair information available?	Yes	Perform repair or diagnosis according to the available repair information. • If the vehicle is not repaired, go to the next step.
		No	Go to the next step.
3	**INSPECT APP SENSOR CONNECTOR FOR POOR CONNECTION** • Turn the ignition switch off. • Disconnect APP sensor connector. • Check for poor connection (such as damaged, pulled-out pins, and corrosion). • Is there any malfunction?	Yes	Repair or replace the terminal, then go to Step 8.
		No	Go to the next step.
4	**INSPECT APP SENSOR NO.2 SIGNAL CIRCUIT FOR SHORT TO POWER** • Turn the ignition switch to the ON position. • Measure voltage between APP sensor terminal C and body ground. • Is voltage **B+**?	Yes	Repair or replace harness for short to power, then go to Step 8.
		No	Go to the next step.
5	**INSPECT APP SENSOR NO.2** • Inspect APP sensor No.2. (See 01–40C–26 ACCELERATOR PEDAL POSITION (APP) SENSOR INSPECTION [AJ].) • Is there any malfunction?	Yes	Replace accelerator pedal, then go to Step 8. (See 01–13C–7 ACCELERATOR PEDAL REMOVAL/INSTALLATION [AJ].)
		No	Go to the next step.
6	**INSPECT PCM CONNECTOR FOR POOR CONNECTION** • Turn the ignition switch off. • Disconnect PCM connector. • Check for poor connection (such as damaged, pulled-out pins, and corrosion). • Is there any malfunction?	Yes	Repair or replace the terminal, then go to Step 8.
		No	Go to the next step.
7	**INSPECT APP SENSOR NO.2 GROUND CIRCUIT FOR OPEN CIRCUIT** • Turn the ignition switch off. • Check continuity between APP sensor terminal B and PCM terminal 1T. • Is there continuity?	Yes	Go to the next step.
		No	Repair or replace harness for open circuit, then go to the next step.
8	**VERIFY TROUBLESHOOTING OF DTC P2128 COMPLETED** • Make sure to reconnect all disconnected connectors. • Clear DTC from PCM memory using WDS or equivalent. • Perform the KOEO or KOER SELF TEST using the WDS or equivalent. (See 01–02C–8 KOEO/KOER SELF TEST [AJ].) • Is the PENDING CODE same DTC present?	Yes	Replace PCM, then go to the next step. (See 01–40C–5 PCM REMOVAL/INSTALLATION [AJ].)
		No	Go to the next step.
9	**VERIFY AFTER REPAIR PROCEDURE** • Perform "AFTER REPAIR PROCEDURE". (See 01–02C–7 AFTER REPAIR PROCEDURE [AJ].) • Are any DTCs present?	Yes	Go to the applicable DTC inspection. (See 01–02C–13 DTC TABLE [AJ].)
		No	Troubleshooting completed.

DTC P2135 [AJ]

E6U010200000W97

DTC P2135	TP sensor No.1/No.2 voltage correlation problem
DETECTION CONDITION	• The PCM compares the input voltage from TP sensor No.1 with the input voltage from TP sensor No.2 when the engine is running. If the difference is more than the specification, the PCM determines that there is a TP sensor No.1/No.2 voltage correlation problem. **Diagnostic support note** • This is a continuous monitor (CCM). • MIL illuminates if the PCM detects the above malfunction condition during the first drive cycle. • FREEZE FRAME DATA is available. • The DTC is stored in the PCM memory.
POSSIBLE CAUSE	• TP sensor No.1 malfunction • TP sensor No.2 malfunction • Connector or terminal malfunction • PCM malfunction

Diagnostic procedure

STEP	INSPECTION		ACTION
1	**VERIFY FREEZE FRAME DATA HAS BEEN RECORDED** • Has FREEZE FRAME DATA been recorded?	Yes	Go to the next step.
		No	Record the FREEZE FRAME DATA on the repair order, then go to the next step.
2	**VERIFY RELATED REPAIR INFORMATION AVAILABILITY** • Verify related Service Bulletins and/or on-line repair information availability. • Is any related repair information available?	Yes	Perform repair or diagnosis according to the available repair information. • If the vehicle is not repaired, go to the next step.
		No	Go to the next step.
3	**INSPECT THROTTLE BODY CONNECTOR FOR POOR CONNECTION** • Turn the ignition switch off. • Disconnect the throttle body connector. • Inspect for poor connection (such as damaged/ pulled-out pins, corrosion). • Is there any malfunction?	Yes	Repair or replace the terminal, then go to Step 6.
		No	Go to the next step.
4	**INSPECT TP SENSOR** • Inspect the TP sensor. (See 01–40C–28 THROTTLE POSITION (TP) SENSOR INSPECTION [AJ].) • Is there any malfunction?	Yes	Replace the throttle body, then go to Step 6. (See 01–13C–2 INTAKE AIR SYSTEM REMOVAL/ INSTALLATION [AJ].)
		No	Go to the next step.
5	**INSPECT PCM CONNECTOR FOR POOR CONNECTION** • Turn the ignition switch off. • Disconnect the PCM connector. • Inspect for poor connection (such as damaged/ pulled-out pins, corrosion). • Is there any malfunction?	Yes	Repair or replace the terminal, then go to the next step.
		No	Go to the next step.
6	**VERIFY TROUBLESHOOTING OF DTC P2135 COMPLETED** • Make sure to reconnect all disconnected connectors. • Clear DTC from PCM memory using WDS or equivalent. • Perform the KOEO or KOER SELF TEST using the WDS or equivalent. (See 01–02C–8 KOEO/KOER SELF TEST [AJ].) • Is the PENDING CODE same DTC present?	Yes	Replace the PCM, then go to the next step. (See 01–40C–5 PCM REMOVAL/INSTALLATION [AJ].)
		No	Go to the next step.
7	**VERIFY AFTER REPAIR PROCEDURE** • Perform the "AFTER REPAIR PROCEDURE". (See 01–02C–7 AFTER REPAIR PROCEDURE [AJ].) • Is any DTC present?	Yes	Go to the applicable DTC inspection. (See 01–02C–13 DTC TABLE [AJ].)
		No	DTC troubleshooting completed.

DTC P2138 [AJ]

E6U010200000W98

DTC P2138	APP sensor No.1/No.2 voltage correlation problem
DETECTION CONDITION	• The PCM compares the input voltage from APP sensor No.1 with the input voltage from APP sensor No.2 If the difference is more than the specification, the PCM determines that there is an APP sensor No.1/No. angle correlation problem. **Diagnostic support note** • This is a continuous monitor (CCM). • MIL illuminates if the PCM detects the above malfunction condition during the first drive cycle. • FREEZE FRAME DATA is available. • The DTC is stored in the PCM memory.
POSSIBLE CAUSE	• APP sensor No.1 malfunction • APP sensor No.2 malfunction • Connector or terminal malfunction • PCM malfunction

Diagnostic procedure

STEP	INSPECTION		ACTION
1	**VERIFY FREEZE FRAME DATA HAS BEEN RECORDED** • Has FREEZE FRAME DATA been recorded?	Yes	Go to the next step.
		No	Record the FREEZE FRAME DATA on the repair order, then go to the next step.
2	**VERIFY RELATED REPAIR INFORMATION AVAILABILITY** • Verify related Service Bulletins and/or on-line repair information availability. • Is any related repair information available?	Yes	Perform repair or diagnosis according to the available repair information. • If the vehicle is not repaired, go to the next step.
		No	Go to the next step.
3	**INSPECT APP SENSOR CONNECTOR FOR POOR CONNECTION** • Turn the ignition switch off. • Disconnect the APP sensor connector. • Inspect for poor connection (such as damaged/ pulled-out pins, corrosion). • Is there any malfunction?	Yes	Repair or replace the terminal, then go to Step 6.
		No	Go to the next step.
4	**INSPECT APP SENSOR** • Inspect the APP sensor. (See 01–40C–26 ACCELERATOR PEDAL POSITION (APP) SENSOR INSPECTION [AJ].) • Is there any malfunction?	Yes	Replace the APP sensor, then go to Step 6. (See 01–13C–7 ACCELERATOR PEDAL REMOVAL/ INSTALLATION [AJ].)
		No	Go to the next step.
5	**INSPECT PCM CONNECTOR FOR POOR CONNECTION** • Turn the ignition switch off. • Disconnect the PCM connector. • Inspect for poor connection (such as damaged/ pulled-out pins, corrosion). • Is there any malfunction?	Yes	Repair or replace the terminal, then go to the next step.
		No	Go to the next step.
6	**VERIFY TROUBLESHOOTING OF DTC P2138 COMPLETED** • Make sure to reconnect all disconnected connectors. • Clear DTC from PCM memory using WDS or equivalent. • Perform the KOEO or KOER SELF TEST using the WDS or equivalent. (See 01–02C–8 KOEO/KOER SELF TEST [AJ].) • Is the PENDING CODE same DTC present?	Yes	Replace the PCM, then go to the next step. (See 01–40C–5 PCM REMOVAL/INSTALLATION [AJ].)
		No	Go to the next step.
7	**VERIFY AFTER REPAIR PROCEDURE** • Perform the "AFTER REPAIR PROCEDURE". (See 01–02C–7 AFTER REPAIR PROCEDURE [AJ].) • Is any DTC present?	Yes	Go to the applicable DTC inspection. (See 01–02C–13 DTC TABLE [AJ].)
		No	DTC troubleshooting completed.

DTC P2144 [AJ]

E6U010200000W99

DTC P2144	EGR boost sensor solenoid valve circuit low input
DETECTION CONDITION	• PCM monitors EGR boost sensor solenoid valve control signal at PCM terminal 1AX. if the PCM turns EGR boost sensor solenoid valve off but voltage at PCM terminal 1AX still remains low, PCM determines that EGR boost sensor solenoid valve circuit has malfunction. **Diagnostic support note** • This is a continuous monitor (CCM). • MIL illuminates if the PCM detects the above malfunction condition in two consecutive drive cycles or in one drive cycle while the DTC for the same malfunction has been stored in the PCM. • PENDING CODE is available if the PCM detects the above malfunction condition during the first drive cycle. • FREEZE FRAME DATA is not available. • DTC is stored in the PCM memory.
POSSIBLE CAUSE	• EGR boost sensor solenoid valve malfunction • Open circuit in wiring harness between main relay and EGR boost sensor solenoid valve terminal A • Open circuit in wiring harness between EGR boost sensor solenoid valve terminal B and PCM terminal 1AX • Short to ground in wiring harness between EGR boost sensor solenoid valve terminal B and PCM terminal 1AX • Connector or terminal malfunction • PCM malfunction

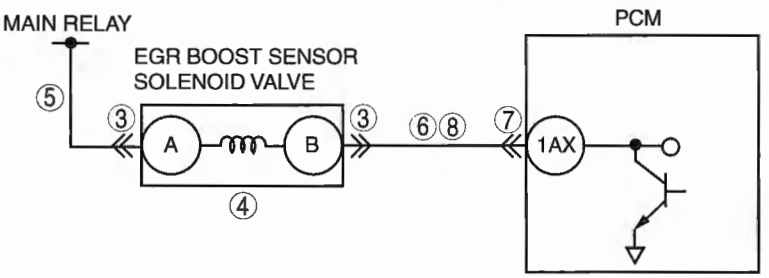

EGR BOOST SENSOR SOLENOID VALVE HARNESS SIDE CONNECTOR

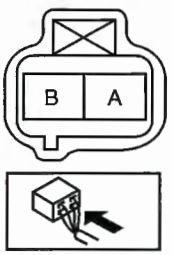

PCM WIRING HARNESS-SIDE CONNECTOR

1BE	1BA	1AW	1AS	1AO	1AK	1AG	1AC	1Y	1U	1Q	1M	1I	1E	1A
1BF	1BB	1AX	1AT	1AP	1AL	1AH	1AD	1Z	1V	1R	1N	1J	1F	1B
1BG	1BC	1AY	1AU	1AQ	1AM	1AI	1AE	1AA	1W	1S	1O	1K	1G	1C
1BH	1BD	1AZ	1AV	1AR	1AN	1AJ	1AF	1AB	1X	1T	1P	1L	1H	1D

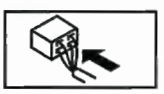

Diagnostic procedure

STEP	INSPECTION		ACTION
1	**VERIFY FREEZE FRAME DATA HAS BEEN RECORDED** • Has FREEZE FRAME DATA been recorded?	Yes	Go to the next step.
		No	Record FREEZE FRAME DATA on repair order, then go to the next step.
2	**VERIFY RELATED REPAIR INFORMATION AVAILABILITY** • Check for related Service Bulletins and/or on-line repair information availability. • Is any related repair information available?	Yes	Perform repair or diagnosis according to the available repair information. • If the vehicle is not repaired, go to the next step.
		No	Go to the next step.
3	**INSPECT EGR BOOST SENSOR SOLENOID VALVE CONNECTOR FOR POOR CONNECTION** • Turn the ignition switch off. • Disconnect EGR boost sensor solenoid valve connector. • Inspect for poor connection (such as damaged/ pulled-out pins, corrosion). • Is there any malfunction?	Yes	Repair or replace the terminal, then go to Step 9.
		No	Go to the next step.
4	**INSPECT EGR BOOST SENSOR SOLENOID VALVE MALFUNCTION** • Perform EGR boost sensor solenoid valve inspection. (See 01–16A–20 EGR BOOST SENSOR SOLENOID VALVE INSPECTION [AJ].) • Is EGR boost sensor solenoid valve normal?	Yes	Go to the next step.
		No	Replace EGR boost sensor solenoid valve, then go to step 9.
5	**INSPECT EGR BOOST SENSOR SOLENOID VALVE POWER SUPPLY CIRCUIT FOR OPEN CIRCUIT** • Turn the ignition switch to the ON position. • Measure voltage between EGR boost sensor solenoid valve terminal A and body ground. • Is voltage **B+**?	Yes	Go to the next step.
		No	Repair or replace harness for open circuit, then go to Step 9.
6	**INSPECT EGR BOOST SENSOR SOLENOID VALVE CONTROL CIRCUIT FOR SHORT TO GROUND** • Inspect continuity between EGR boost sensor solenoid valve terminal B and body ground. • Is there continuity?	Yes	Repair or replace harness for short to ground, then go to Step 9.
		No	Go to the next step.
7	**INSPECT PCM CONNECTOR FOR POOR CONNECTION** • Disconnect PCM connector. • Inspect for poor connection at terminal 1AX. (such as damaged, pulled-out pins, corrosion). • Is there any malfunction?	Yes	Repair terminal, then go to Step 9.
		No	Go to the next step.
8	**INSPECT EGR BOOST SENSOR SOLENOID VALVE CONTROL CIRCUIT FOR OPEN CIRCUIT** • Inspect for continuity between EGR boost sensor solenoid valve terminal A and PCM terminal 1AX. • Is there continuity?	Yes	Go to the next step.
		No	Repair or replace harness for open circuit, then go to the next step.
9	**VERIFY TROUBLESHOOTING OF DTC P2144 COMPLETED** • Make sure to reconnect all disconnected connectors. • Clear DTC from PCM memory using WDS or equivalent. • Perform the KOEO or KOER SELF TEST using the WDS or equivalent. (See 01–02C–8 KOEO/KOER SELF TEST [AJ].) • Is the PENDING CODE same DTC present?	Yes	Replace PCM, then go to the next step. (See 01–40C–5 PCM REMOVAL/INSTALLATION [AJ].)
		No	Go to the next step.

STEP	INSPECTION		ACTION
10	**VERIFY AFTER REPAIR PROCEDURE** • Perform the "After Repair Procedure". (See 01–02C–7 AFTER REPAIR PROCEDURE [AJ].) • Is any DTC present?	Yes	Go to the applicable DTC inspection. (See 01–02C–13 DTC TABLE [AJ].)
		No	Troubleshooting completed.

DTC P2145 [AJ]

E6U010200000WA0

DTC P2145	EGR boost sensor solenoid valve circuit high input
DETECTION CONDITION	• PCM monitors EGR boost sensor solenoid valve control signal at PCM terminal 1AX. if the PCM turns EGR boost sensor solenoid valve on but voltage at PCM terminal 1AX still remains high, PCM determines that EGR boost sensor solenoid valve circuit has malfunction. **Diagnostic support note** • This is a continuous monitor (CCM). • MIL illuminates if the PCM detects the above malfunction condition in two consecutive drive cycles or in one drive cycle while the DTC for the same malfunction has been stored in the PCM. • PENDING CODE is available if the PCM detects the above malfunction condition during the first drive cycle. • FREEZE FRAME DATA is not available. • DTC is stored in the PCM memory.
POSSIBLE CAUSE	• EGR boost sensor solenoid valve malfunction • Short to power supply between EGR boost sensor solenoid valve terminal B and PCM terminal 1AX • Shorted EGR boost sensor solenoid valve or PCM connector • PCM malfunction

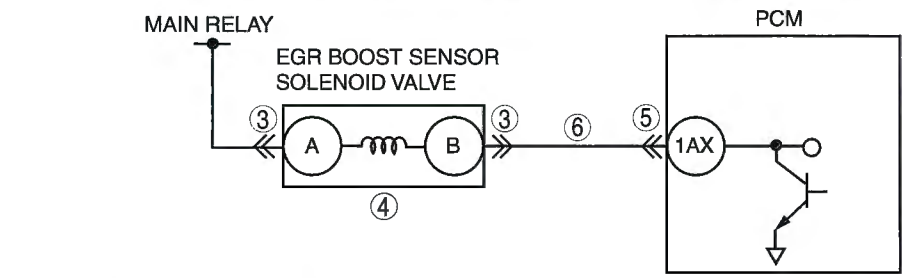

EGR BOOST SENSOR SOLENOID VALVE HARNESS SIDE CONNECTOR

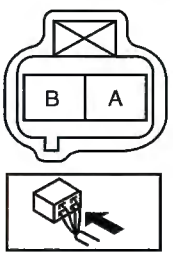

PCM WIRING HARNESS-SIDE CONNECTOR

1BE	1BA	1AW	1AS	1AO	1AK	1AG	1AC	1Y	1U	1Q	1M	1I	1E	1A
1BF	1BB	1AX	1AT	1AP	1AL	1AH	1AD	1Z	1V	1R	1N	1J	1F	1B
1BG	1BC	1AY	1AU	1AQ	1AM	1AI	1AE	1AA	1W	1S	1O	1K	1G	1C
1BH	1BD	1AZ	1AV	1AR	1AN	1AJ	1AF	1AB	1X	1T	1P	1L	1H	1D

Diagnostic procedure

STEP	INSPECTION		ACTION
1	**VERIFY FREEZE FRAME DATA HAS BEEN RECORDED** • Has FREEZE FRAME DATA been recorded?	Yes	Go to the next step.
		No	Record FREEZE FRAME DATA on repair order, then go t the next step.
2	**VERIFY RELATED REPAIR INFORMATION AVAILABILITY** • Check for related Service Bulletins and/or on-line repair information availability. • Is any repair information available?	Yes	Perform repair or diagnosis according to the available repair information. • If the vehicle is not repaired, go to the next step.
		No	Go to the next step.
3	**INSPECT EGR BOOST SENSOR SOLENOID VALVE CONNECTOR FOR POOR CONNECTION** • Turn the ignition switch off. • Disconnect EGR boost sensor solenoid valve connector. • Inspect for poor connection (such as damaged/ pulled-out pins, corrosion). • Is there any malfunction?	Yes	Repair or replace the terminal, then go to Step 7.
		No	Go to the next step.
4	**INSPECT EGR BOOST SENSOR SOLENOID VALVE MALFUNCTION** • Perform EGR boost sensor solenoid valve inspection. (See 01–16A–20 EGR BOOST SENSOR SOLENOID VALVE INSPECTION [AJ].) • Is VIS solenoid valve normal?	Yes	Go to the next step.
		No	Replace EGR boost sensor solenoid valve, then go to Step 7.
5	**INSPECT PCM CONNECTOR FOR POOR CONNECTION** • Turn the ignition switch off. • Disconnect PCM connector. • Inspect for poor connection at terminal 1AX. (such as damaged, pulled-out pins, corrosion). • Is there any malfunction?	Yes	Repair terminal, then go to Step 7.
		No	Go to the next step.
6	**INSPECT EGR BOOST SENSOR SOLENOID VALVE CONTROL CIRCUIT SHORT TO POWER SUPPLY** • Turn the ignition switch to the ON position. • Measure voltage between EGR boost sensor solenoid valve terminal A and body ground. • Is voltage **B+**?	Yes	Repair or replace harness for open circuit, then go to the next step.
		No	Go to the next step.
7	**VERIFY TROUBLESHOOTING OF DTC P2145 COMPLETED** • Make sure to reconnect all disconnected connectors. • Clear DTC from PCM memory using WDS or equivalent. • Perform the KOEO or KOER SELF TEST using the WDS or equivalent. (See 01–02C–8 KOEO/KOER SELF TEST [AJ].) • Is the PENDING CODE same DTC present?	Yes	Replace PCM, then go to the next step. (See 01–40C–5 PCM REMOVAL/INSTALLATION [AJ].)
		No	Go to the next step.
8	**VERIFY AFTER REPAIR PROCEDURE** • Perform the "After Repair Procedure". (See 01–02C–7 AFTER REPAIR PROCEDURE [AJ].) • Is any DTC present?	Yes	Go to the applicable DTC inspection. (See 01–02C–13 DTC TABLE [AJ].)
		No	Troubleshooting completed.

DTC P2177, P2179 [AJ]

E6U010200000WA1

DTC P2177 DTC P2179	**Fuel system too lean at off idle (Right bank)** **Fuel system too lean at off idle (Left bank)**
DETECTION CONDITION	• PCM monitors short term fuel trim (SHRTFT), long term fuel trim (LONGFT) during closed loop fuel control at off-idle. If the LONGFT and the sum total of these fuel trims exceed preprogrammed criteria. PCM determines that fuel system is too lean at off-idle. **Diagnostic support note** • This is a continuous monitor. (Fuel system) • MIL illuminates if the PCM detects the above malfunctioning condition in two consecutive drive cycles or in one drive cycle while the DTC for the same malfunction has been stored in the PCM. • PENDING CODE is available if the PCM detects the above malfunction conditions during the first drive cycle. • FREEZE FRAME DATA is available. • DTC is stored in the PCM memory.
POSSIBLE CAUSE	• Misfire • HO2S (RF, LF) deterioration • HO2S heater (RF, LF) malfunction • MAF sensor malfunction • Pressure regulator (built-in fuel injection pump) malfunction • Fuel pump malfunction • Fuel filter clogged or restricted • Fuel leakage on fuel line from fuel delivery pipe and fuel pump • Leakage exhaust system • Purge solenoid valve improper operation • Purge solenoid valve malfunction (stuck open) • Purge solenoid hoses improper connection • Air suction in intake-air system • Insufficient engine compression • Variable valve timing control system improper operation • PCM malfunction

Diagnostic procedure

STEP	INSPECTION		ACTION
1	**VERIFY FREEZE FRAME DATA AND DIAGNOSTIC MONITORING TEST RESULTS HAVE BEEN RECORDED** • Have FREEZE FRAME DATA and DIAGNOSTIC MONITORING TEST RESULTS (Fuel system related) been recorded?	Yes	Go to the next step.
		No	Record FREEZE FRAME DATA and DIAGNOSTIC MONITORING TEST RESULTS on repair order, then go to the next step.
2	**VERIFY RELATED REPAIR INFORMATION AVAILABILITY** • Verify related Service Bulletins and/or on-line repair information availability. • Is any related repair information available?	Yes	Perform repair or diagnosis according to the available repair information. • If the vehicle is not repaired, go to the next step.
		No	Go to the next step.
3	**VERIFY RELATED PENDING CODE OR STORED DTCS** • Turn ignition switch to OFF, then ON (Engine off). • Verify related pending code or stored DTCs. • Is other DTC present?	Yes	If misfire DTC is present, go to Step 8. If other DTC is present, go to appropriate DTC troubleshooting procedure. (See 01–02C–13 DTC TABLE [AJ].)
		No	If driveability concern is present, go to Step 8. If not, go to the next step.
4	**IDENTIFY TRIGGER DTC FOR FREEZE FRAME DATA** • Is DTC P2177 or P2179 on FREEZE FRAME DATA?	Yes	Go to the next step.
		No	Go to troubleshooting procedures for DTC on FREEZE FRAME DATA.
5	**VERIFY CURRENT INPUT SIGNAL STATUS (KEY TO ON/IDLE)** • Access APP1, APP2, ECT, MAF, TP and VSS PIDs using the WDS or equivalent. • Is there any signal that is far out of specification when igniting ignition switch is ON and engine runs?	Yes	Inspect suspected sensor and excessive resistance in related wiring harnesses. Repair or if necessary. Then go to Step 17.
		No	Go to the next step.
6	**VERIFY CURRENT INPUT SIGNAL STATUS UNDER TROUBLE CONDITION** • Inspect same PIDs as Step 5 while simulating FREEZE FRAME DATA condition. • Is there any signal which causes drastic changes?	Yes	Inspect suspected sensor and related wiring harnesses repair or replace it. Then go to Step 17.
		No	Go to the next step.
7	**VERIFY CURRENT INPUT SIGNAL STATUS OF FRONT HO2S** • Start the engine and warm it up completely. • Access O2S11 (with P2177) or O2S21 (with P2179) PID using the WDS or equivalent. • Check PID under following accelerator pedal condition (in PARK (ATX) or NEUTRAL (MTX)). • Is PID reading normal? — **More than 0.45 V** when accelerator pedal is suddenly depressed (rich condition). — **Less than 0.45 V** just after release of accelerator pedal (lean condition).	Yes	Go to the next step.
		No	Visually inspect for any gas leakage between exhaust manifold and front HO2S. • If there is no leakage, replace front HO2S. (See 01–15C–2 EXHAUST SYSTEM REMOVAL/ INSTALLATION [AJ].) Then go to Step 17.
8	**VERIFY CURRENT INPUT SIGNAL STATUS OF MAF SENSOR** • Connect the WDS or equivalent to the DLC-2. • Start the engine. • Access the MAF PID. • Verify that the MAF PID changes quickly according to engine speed. • Is the PID normal?	Yes	Go to the next step.
		No	Replace MAF/IAT sensor, then go to Step 15.
9	**INSPECT FOR EXCESSIVE AIR SUCTION OF INTAKE AIR SYSTEM** • Visually inspect for loosen, cracks or damages hoses on intake-air system. • Is there any malfunction?	Yes	Repair or replace source of air suction, then go to Step 17.
		No	Go to the next step.
10	**INSPECT PURGE SOLENOID OPERATION** • Carry out Purge Control System Inspection. (See 01–03C–69 Purge Control System Inspection.) • Does purge control system work properly?	Yes	Go to the next step.
		No	Repair or replace malfunctioning part according to inspection result, then go to Step 17.

STEP	INSPECTION		ACTION
11	**INSPECT FUEL LINE PRESSURE** • Perform the "FUEL LINE PRESSURE INSPECTION". (See 01–14A–7 FUEL LINE PRESSURE INSPECTION [L3, AJ].) • Is there any malfunction?	Yes	If fuel pressure is too high, replace fuel pump unit, then go to Step 17. If fuel line pressure is low, go to the next step.
		No	Go to Step 13.
12	**INSPECT FUEL LEAKAGE FROM FUEL PUMP TO FUEL DELIVERY PIPE** • Visually inspect fuel line for any leakage. • Is any fuel leakage found?	Yes	Replace suspected fuel line, then go to Step 16.
		No	Inspect for foreign materials or stain inside fuel filter (low-pressure). If for foreign materials or stain inside fuel filter (low-pressure), clean of fuel tank and filter. Then go to Step 17.
13	**INSPECT IGNITION SYSTEM** • Carry out spark test for right bank cylinders (with P2177) or left bank cylinders (with P2179). (See 01–03C–68 Spark Test.) • Is strong blue spark visible at each cylinder?	Yes	Go to the next step.
		No	Repair or replace malfunctioning part according to spark test results, then go to Step 17.
14	**INSPECT ENGINE COMPRESSION** • Inspect the engine compression for right bank cylinders (with P2177) or left bank cylinders (with P2189). (See 01–10C–6 COMPRESSION INSPECTION [AJ].) • Is there any malfunction?	Yes	Go to the next step.
		No	Implement engine overhaul for repairs, then go to Step 17.
15	**INSPECT VARIABLE VALVE TIMING CONTROL SYSTEM OPERATION** • Inspect variable valve timing control system operation for right bank cylinders (with P2177) or left bank cylinders (with P2189). (See 01–03C–74 Variable Valve Timing Control System Operation Inspection.) • Does variable valve timing control system work properly?	Yes	Go to the next step.
		No	Repair or replace malfunctioning part according to inspection results, then go to Step 17.
16	**INSPECT FUEL INJECTOR OPERATION** • Remove right bank (with P2177) or left bank (with P2179) fuel injectors. • Inspect fuel injector (resistance, injection amount). (See 01–14A–32 FUEL INJECTOR INSPECTION [AJ].) • Is there any malfunction?	Yes	Replace suspected fuel injector, then go to the next step.
		No	Go to the next step.
17	**VERIFY TROUBLESHOOTING OF DTC P2177 AND P2179 COMPLETED** • Make sure to reconnect all disconnected connectors. • Clear DTC from PCM memory using WDS or equivalent. • Perform the KOER SELF TEST using the WDS or equivalent. (See 01–02C–8 KOEO/KOER SELF TEST [AJ].) • Is the PENDING CODE same DTC present?	Yes	Replace PCM, then go to the next step. (See 01–40C–5 PCM REMOVAL/INSTALLATION [AJ].)
		No	Go to the next step.
18	**VERIFY AFTER REPAIR PROCEDURE** • Perform the "After Repair Procedure". (See 01–02C–7 AFTER REPAIR PROCEDURE [AJ].) • Are any DTCs present?	Yes	Go to the applicable DTC inspection. (See 01–02C–13 DTC TABLE [AJ].)
		No	Troubleshooting completed.

DTC P2178, P2180 [AJ]

E6U010200000WA2

DTC P2178 **DTC P2180**	**Fuel system too rich at off idle (Right bank)** **Fuel system too rich at off idle (Left bank)**
DETECTION CONDITION	• PCM monitors short term fuel trim (SHRTFT), long term fuel trim (LONGFT) during closed loop fuel contr at off-idle. If the LONGFT and the sum total of these fuel trims exceed preprogrammed criteria. PCM determines that fuel system is too rich at off-idle. **Diagnostic support note** • This is a continuous monitor. (Fuel system) • MIL illuminates if the PCM detects the above malfunctioning condition in two consecutive drive cycles or in one drive cycle while the DTC for the same malfunction has been stored in the PCM. • PENDING CODE is available if the PCM detects the above malfunction conditions during the first drive cycle. • FREEZE FRAME DATA is available. • DTC is stored in the PCM memory.
POSSIBLE CAUSE	• Misfire • HO2S (RF, LF) deterioration • HO2S heater (RF, LF) malfunction • MAF sensor malfunction • Pressure regulator (built-in fuel injection pump) malfunction • Fuel pump malfunction • EGR valve improper operation • Purge solenoid valve improper operation • Purge solenoid valve malfunction (stuck open) • Purge solenoid hoses improper connection • Variable valve timing control system improper operation • PCV valve malfunction • PCM malfunction

Diagnostic procedure

STEP	INSPECTION		ACTION
1	**VERIFY FREEZE FRAME DATA AND DIAGNOSTIC MONITORING TEST RESULTS HAVE BEEN RECORDED** • Have FREEZE FRAME DATA and DIAGNOSTIC MONITORING TEST RESULTS (Fuel system related) been recorded?	Yes	Go to the next step.
		No	Record FREEZE FRAME DATA and DIAGNOSTIC MONITORING TEST RESULTS on repair order, then go to the next step.
2	**VERIFY RELATED REPAIR INFORMATION AVAILABILITY** • Verify related Service Bulletins and/or on-line repair information availability. • Is any related repair information available?	Yes	Perform repair or diagnosis according to the available repair information. • If the vehicle is not repaired, go to the next step.
		No	Go to the next step.
3	**VERIFY RELATED PENDING CODE OR STORED DTCs** • Turn ignition switch to OFF, then ON (Engine off). • Verify related pending code or stored DTCs using the WDS or equivalent. • Is other DTC present?	Yes	If misfire DTC is present, go to Step 8. If other DTC is present, go to the appropriate DTC troubleshooting procedure. (See 01–02C–13 DTC TABLE [AJ].)
		No	If driveability concern is present, go to Step 8. If not, go to the next step.
4	**IDENTIFY TRIGGER DTC FOR FREEZE FRAME DATA** • Is DTC P2178 or P2180 on FREEZE FRAME DATA?	Yes	Go to the next step.
		No	Go to troubleshooting procedures for DTC on FREEZE FRAME DATA.
5	**VERIFY CURRENT INPUT SIGNAL STATUS (KEY TO ON/IDLE)** • Access APP1, APP2, ECT, MAF, TP and VSS PIDs using the WDS or equivalent. • Is there any signal that is far out of specification when ignition switch is ON and engine runs?	Yes	Inspect suspected sensor and excessive resistance in related wiring harnesses. Repair or if necessary. Then go to Step 15.
		No	Go to the next step.
6	**VERIFY CURRENT INPUT SIGNAL STATUS UNDER TROUBLE CONDITION** • Inspect same PIDs as Step 5 while simulating FREEZE FRAME DATA condition. • Is there any signal which causes drastic changes?	Yes	Inspect suspected sensor and related wiring harnesses repair or replace it. Then go to Step 15.
		No	Go to the next step.

STEP	INSPECTION		ACTION
7	**VERIFY CURRENT INPUT SIGNAL STATUS OF FRONT HO2S** • Start the engine and warm it up completely. • Access O2S11 (with P2178) or O2S21 (with P2180) PID using the WDS or equivalent. • Check PID under following accelerator pedal condition (in PARK (ATX) or NEUTRAL (MTX)). • Is PID reading normal? — **More than 0.45 V** when accelerator pedal is suddenly depressed (rich condition). — **Less than 0.45 V** just after release of accelerator pedal (lean condition).	Yes	Go to the next step.
		No	Visually inspect for any gas leakage between exhaust manifold and front HO2S. • If there is no leakage, replace front HO2S. (See 01–15C–2 EXHAUST SYSTEM REMOVAL/ INSTALLATION [AJ].) Then go to Step 15.
8	**VERIFY CURRENT INPUT SIGNAL STATUS OF MAF SENSOR** • Start the engine. • Access the MAF PID using the WDS or equivalent. • Verify that the MAF PID changes quickly according to engine speed. • Is the PID normal?	Yes	Go to the next step.
		No	Replace MAF/IAT sensor, then go to Step 15.
9	**INSPECT PURGE SOLENOID OPERATION** • Carry out Purge Control System Inspection. (See 01–03C–69 Purge Control System Inspection.) • Does purge control system work properly?	Yes	Go to the next step.
		No	Repair or replace malfunctioning part according to inspection result, then go to Step 15.
10	**INSPECT PCV VALVE OPERATION** • Inspect PCV valve operation. (See 01–16A–23 POSITIVE CRANKCASE VENTILATION (PCV) VALVE INSPECTION [AJ].) • Is PCV valve normal?	Yes	Go to the next step.
		No	Replace PCV valve, then go to Step 15.
'1	**INSPECT EGR VALVE OPERATION** • Carry out EGR Control System Inspection. (See 01–03C–69 EGR Control System Inspection.) • Does EGR control system work properly?	Yes	Go to the next step.
		No	Repair or replace malfunctioning part according to inspection result, then go to Step 15.
12	**INSPECT FUEL LINE PRESSURE** • Perform the "FUEL LINE PRESSURE INSPECTION". (See 01–14A–7 FUEL LINE PRESSURE INSPECTION [L3, AJ].) • Is there any malfunction?	Yes	If fuel pressure is too high, replace fuel pump unit, then go to Step 15. If fuel line pressure is low, go to the next step.
		No	Go to Step 14.
13	**INSPECT FUEL LEAKAGE FROM FUEL PUMP TO FUEL DELIVERY PIPE** • Visually inspect fuel line for any leakage. • Is any fuel leakage found?	Yes	Replace suspected fuel line, then go to Step 16.
		No	Inspect for foreign materials or stain inside fuel filter (low-pressure). If for foreign materials or stain inside fuel filter (low-pressure), clean of fuel tank and filter. Then go to Step 15.
14	**INSPECT VARIABLE VALVE TIMING CONTROL SYSTEM OPERATION** • Inspect variable valve timing control system operation for right bank (with P2178) or left bank (with P2180). (See 01–03C–74 Variable Valve Timing Control System Operation Inspection.) • Does variable valve timing control system work properly?	Yes	Go to the next step.
		No	Repair or replace malfunctioning part according to inspection results, then go to the next step.

STEP	INSPECTION		ACTION
15	**VERIFY TROUBLESHOOTING OF DTC P2178 AND P2180 COMPLETED** • Make sure to reconnect all disconnected connectors. • Clear DTC from PCM memory using WDS or equivalent. • Perform the KOER SELF TEST using the WDS or equivalent. (See 01–02C–8 KOEO/KOER SELF TEST [AJ].) • Is the PENDING CODE same DTC present?	Yes	Replace PCM, then go to the next step. (See 01–40C–5 PCM REMOVAL/INSTALLATION [AJ].)
		No	Go to the next step.
16	**VERIFY AFTER REPAIR PROCEDURE** • Perform the "After Repair Procedure". (See 01–02C–7 AFTER REPAIR PROCEDURE [AJ].) • Are any DTCs present?	Yes	Go to the applicable DTC inspection. (See 01–02C–13 DTC TABLE [AJ].)
		No	Troubleshooting completed.

DTC P2187, P2189 [AJ]

E6U010200000WA3

DTC P2187 DTC P2189	**Fuel system too lean at idle (Right bank)** **Fuel system too lean at idle (Left bank)**
DETECTION CONDITION	• PCM monitors short term fuel trim (SHRTFT) and long term fuel trim (LONGFT) during closed loop fuel control at idle. If the LONGFT and the sum total of these fuel trims exceed preprogrammed criteria. PCM determines that fuel system is too lean at idle. **Diagnostic support note** • This is a continuous monitor. (Fuel system) • MIL illuminates if the PCM detects the above malfunctioning condition in two consecutive drive cycles or in one drive cycle while the DTC for the same malfunction has been stored in the PCM. • PENDING CODE is available if the PCM detects the above malfunction conditions during the first drive cycle. • FREEZE FRAME DATA is available. • DTC is stored in the PCM memory.
POSSIBLE CAUSE	• Misfire • HO2S (RF, LF) deterioration • HO2S heater (RF, LF) malfunction • MAF sensor malfunction • Pressure regulator (built-in fuel injection pump) malfunction • Fuel pump malfunction • Fuel filter clogged or restricted • Fuel leakage on fuel line from fuel delivery pipe and fuel pump • Leakage exhaust system • Purge solenoid valve malfunction • Purge solenoid hoses improper connection • Air suction in intake-air system • Insufficient engine compression • Variable valve timing control system improper operation • PCM malfunction

Diagnostic procedure

STEP	INSPECTION		ACTION
1	**VERIFY FREEZE FRAME DATA AND DIAGNOSTIC MONITORING TEST RESULTS HAVE BEEN RECORDED** • Have FREEZE FRAME DATA and DIAGNOSTIC MONITORING TEST RESULTS (Fuel system related) been recorded?	Yes	Go to the next step.
		No	Record FREEZE FRAME DATA and DIAGNOSTIC MONITORING TEST RESULTS on repair order, then go to the next step.
2	**VERIFY RELATED REPAIR INFORMATION AVAILABILITY** • Verify related Service Bulletins and/or on-line repair information availability. • Is any related repair information available?	Yes	Perform repair or diagnosis according to the available repair information. • If the vehicle is not repaired, go to the next step.
		No	Go to the next step.
3	**VERIFY RELATED PENDING CODE OR STORED DTCs** • Turn ignition switch to OFF, then ON (Engine off). • Verify related pending code or stored DTCs using the WDS or equivalent. • Is other DTC present?	Yes	If misfire DTC is present, go to Step 8. If other DTC is present, go to appropriate DTC troubleshooting procedure. (See 01–02C–13 DTC TABLE [AJ].)
		No	If driveability concern is present, go to Step 8. If not, go to the next step.
4	**IDENTIFY TRIGGER DTC FOR FREEZE FRAME DATA** • Is DTC P2187 or P2189 on FREEZE FRAME DATA?	Yes	Go to the next step.
		No	Go to troubleshooting procedures for DTC on FREEZE FRAME DATA.
5	**VERIFY CURRENT INPUT SIGNAL STATUS (KEY TO ON/IDLE)** • Access APP1, APP2, ECT, MAF, TP and VSS PIDs using the WDS or equivalent. • Is there any signal that is far out of specification when igniting ignition switch is ON and engine runs?	Yes	Inspect suspected sensor and excessive resistance in related wiring harnesses. Repair or if necessary. Then go to Step 17.
		No	Go to the next step.
6	**VERIFY CURRENT INPUT SIGNAL STATUS UNDER TROUBLE CONDITION** • Inspect same PIDs as Step 5 while simulating FREEZE FRAME DATA condition. • Is there any signal which causes drastic changes?	Yes	Inspect suspected sensor and related wiring harnesses repair or replace it. Then go to Step 17.
		No	Go to the next step.
7	**VERIFY CURRENT INPUT SIGNAL STATUS OF FRONT HO2S** • Start the engine and warm it up completely. • Access O2S11 (with P2187) or O2S21 (with P2189) PID using the WDS or equivalent. • Check PID under following accelerator pedal condition (in PARK (ATX) or NEUTRAL (MTX)). • Is PID reading normal? — **More than 0.45 V** when accelerator pedal is suddenly depressed (rich condition). — **Less than 0.45 V** just after release of accelerator pedal (lean condition).	Yes	Go to the next step.
		No	Visually inspect for any gas leakage between exhaust manifold and front HO2S. • If there is no leakage, replace front HO2S. (See 01–15C–2 EXHAUST SYSTEM REMOVAL/ INSTALLATION [AJ].) Then go to Step 17.
8	**VERIFY CURRENT INPUT SIGNAL STATUS OF MAF SENSOR** • Connect the WDS or equivalent to the DLC-2. • Start the engine. • Access the MAF PID. • Verify that the MAF PID changes quickly according to engine speed. • Is the PID normal?	Yes	Go to the next step.
		No	Replace MAF/IAT sensor, then go to Step 17.
9	**INSPECT FOR EXCESSIVE AIR SUCTION OF INTAKE AIR SYSTEM** • Visually inspect for loosen, cracks or damages hoses on intake-air system. • Is there any malfunction?	Yes	Repair or replace source of air suction, then go to Step 17.
		No	Go to the next step.

STEP	INSPECTION		ACTION
10	**INSPECT PURGE SOLENOID VALVE STUCK OPEN** • Turn the ignition switch off. • Disconnect both hoses from purge solenoid valve. • Blow air through purge solenoid valve. • Does air blow through?	Yes	Replace purge solenoid valve. Then go to Step 17.
		No	Go to the next step.
11	**INSPECT FUEL LINE PRESSURE** • Perform the "FUEL LINE PRESSURE INSPECTION". (See 01–14A–7 FUEL LINE PRESSURE INSPECTION [L3, AJ].) • Is there any malfunction?	Yes	If fuel pressure is too high, replace fuel pump unit, then go to Step 17. If fuel line pressure is low, go to the next step.
		No	Go to Step 13.
12	**INSPECT LEAKAGE FROM FUEL PUMP TO FUEL DELIVERY PIPE** • Visually inspect fuel line for any leakage. • Is any fuel leakage found?	Yes	Replace suspected fuel line, then go to Step 17.
		No	Inspect for foreign materials or stain inside fuel filter (low-pressure). If for foreign materials or stain inside fuel filter (low-pressure), clean of fuel tank and filter. Then go to Step 17.
13	**INSPECT IGNITION SYSTEM** • Carry out spark test for right bank cylinders (with P2187) or left bank cylinders (with P2189). (See 01–03C–68 Spark Test.) • Is strong blue spark visible at each cylinder?	Yes	Go to the next step.
		No	Repair or replace malfunctioning part according to spark test results, then go to Step 17.
14	**INSPECT ENGINE COMPRESSION** • Inspect the engine compression for right bank cylinders (with P2187) or left bank cylinders (with P2189). (See 01–10C–6 COMPRESSION INSPECTION [AJ].) • Is there any malfunction?	Yes	Go to the next step.
		No	Implement engine overhaul for repairs, then go to Step 17.
15	**INSPECT VARIABLE VALVE TIMING CONTROL SYSTEM OPERATION** • Inspect variable valve timing control system operation for right bank (with P2187) or left bank (with P2189). (See 01–03C–74 Variable Valve Timing Control System Operation Inspection.) • Does variable valve timing control system work properly?	Yes	Go to the next step.
		No	Repair or replace malfunctioning part according to inspection results, then go to Step 17.
16	**INSPECT FUEL INJECTOR OPERATION** • Remove fuel injector for right bank cylinder (with P2187) or left bank cylinders (with P2189). • Inspect fuel injector (resistance, injection amount). (See 01–14A–32 FUEL INJECTOR INSPECTION [AJ].) • Is fuel injector normal?	Yes	Go to the next step.
		No	Replace suspected fuel injector, then go to the next step.
17	**VERIFY TROUBLESHOOTING OF DTC P2187 AND P2189 COMPLETED** • Make sure to reconnect all disconnected connectors. • Clear DTC from PCM memory using WDS or equivalent. • Perform the KOER SELF TEST using the WDS or equivalent. (See 01–02C–8 KOEO/KOER SELF TEST [AJ].) • Is the PENDING CODE same DTC present?	Yes	Replace PCM, then go to the next step. (See 01–40C–5 PCM REMOVAL/INSTALLATION [AJ].)
		No	Go to the next step.
18	**VERIFY AFTER REPAIR PROCEDURE** • Perform the "After Repair Procedure". (See 01–02C–7 AFTER REPAIR PROCEDURE [AJ].) • Are any DTCs present?	Yes	Go to the applicable DTC inspection. (See 01–02C–13 DTC TABLE [AJ].)
		No	Troubleshooting completed.

DTC P2188, P2190 [AJ]

E6U010200000WA4

DTC P2188 DTC P2190	**Fuel system too rich at idle (Right bank)** **Fuel system too rich at idle (Left bank)**
DETECTION CONDITION	• PCM monitors short term fuel trim (SHRTFT), long term fuel trim (LONGFT) during closed loop fuel control at idle. If the LONGFT and the sum total of these fuel trims exceed preprogrammed criteria. PCM determines that fuel system is too rich at idle. **Diagnostic support note** • This is a continuous monitor. (Fuel system) • MIL illuminates if the PCM detects the above malfunctioning condition in two consecutive drive cycles or in one drive cycle while the DTC for the same malfunction has been stored in the PCM. • PENDING CODE is available if the PCM detects the above malfunction conditions during the first drive cycle. • FREEZE FRAME DATA is available. • DTC is stored in the PCM memory.
POSSIBLE CAUSE	• Misfire • HO2S (RF, LF) deterioration • HO2S heater (RF, LF) malfunction • MAF sensor malfunction • Pressure regulator (built-in fuel injection pump) malfunction • Fuel pump malfunction • Stuck open EGR valve • Purge solenoid valve improper operation • Purge solenoid valve malfunction (stuck open) • Purge solenoid hoses improper connection • Variable valve timing control system improper operation • PCV valve malfunction • PCM malfunction

Diagnostic procedure

STEP	INSPECTION		ACTION
1	**VERIFY FREEZE FRAME DATA AND DIAGNOSTIC MONITORING TEST RESULTS HAVE BEEN RECORDED** • Have FREEZE FRAME DATA and DIAGNOSTIC MONITORING TEST RESULTS (Fuel system related) been recorded?	Yes	Go to the next step.
		No	Record FREEZE FRAME DATA and DIAGNOSTIC MONITORING TEST RESULTS on repair order, then go to the next step.
2	**VERIFY RELATED REPAIR INFORMATION AVAILABILITY** • Verify related Service Bulletins and/or on-line repair information availability. • Is any related repair information available?	Yes	Perform repair or diagnosis according to the available repair information. • If the vehicle is not repaired, go to the next step.
		No	Go to the next step.
3	**VERIFY RELATED PENDING CODE OR STORED DTCs** • Turn ignition switch to OFF, then ON (Engine off). • Verify related pending code or stored DTCs using the WDS or equivalent. • Is other DTC present?	Yes	If misfire DTC is present, go to Step 8. If other DTC is present, go to appropriate DTC troubleshooting procedure. (See 01–02C–13 DTC TABLE [AJ].)
		No	If driveability concern is present, go to Step 8. If not, go to the next step.
4	**IDENTIFY TRIGGER DTC FOR FREEZE FRAME DATA** • Is DTC P2188 or P2190 on FREEZE FRAME DATA?	Yes	Go to the next step.
		No	Go to troubleshooting procedures for DTC on FREEZE FRAME DATA.
5	**VERIFY CURRENT INPUT SIGNAL STATUS (KEY TO ON/IDLE)** • Access APP1, APP2, ECT, MAF, TP and VSS PIDs using the WDS or equivalent. • Is there any signal that is far out of specification when ignition switch is ON and engine runs?	Yes	Inspect suspected sensor and excessive resistance in related wiring harnesses. Repair or if necessary. Then go to Step 15.
		No	Go to the next step.
6	**VERIFY CURRENT INPUT SIGNAL STATUS UNDER TROUBLE CONDITION** • Inspect same PIDs as Step 4 while simulating FREEZE FRAME DATA condition. • Is there any signal which causes drastic changes?	Yes	Inspect suspected sensor and related wiring harnesses, repair or replace it. Then go to Step 15.
		No	Go to the next step.

STEP	INSPECTION		ACTION
7	**VERIFY CURRENT INPUT SIGNAL STATUS OF FRONT HO2S** • Start the engine and warm it up completely. • Access O2S11 (with P2188) or O2S21 (with P2190) PID using the WDS or equivalent. • Check PID under following accelerator pedal condition (in PARK (ATX) or NEUTRAL (MTX)). • Is PID reading normal? — **Above 0.45 V** when accelerator pedal is suddenly depressed (rich condition). — **Below 0.45 V** just after release of accelerator pedal (lean condition).	Yes	Go to the next step.
		No	Visually inspect for any gas leakage between exhaust manifold and front HO2S. • If there is no leakage, replace front HO2S. (See 01–15C–2 EXHAUST SYSTEM REMOVAL/ INSTALLATION [AJ].) Then go to Step 15.
8	**VERIFY CURRENT INPUT SIGNAL STATUS OF MAF SENSOR** • Connect the WDS or equivalent to the DLC-2. • Start the engine. • Access the MAF PID. • Verify that the MAF PID changes quickly according to engine speed. • Is the PID normal?	Yes	Go to the next step.
		No	Replace MAF/IAT sensor, then go to Step 15.
9	**INSPECT PURGE SOLENOID OPERATION** • Carry out Purge Control System Inspection. (See 01–03C–69 Purge Control System Inspection.) • Does purge control system work properly?	Yes	Go to the next step.
		No	Repair or replace malfunctioning part according to inspection result, then go to Step 15.
10	**INSPECT PCV VALVE OPERATION** • Inspect PCV valve operation. (See 01–16A–23 POSITIVE CRANKCASE VENTILATION (PCV) VALVE INSPECTION [AJ].) • Is PCV valve normal?	Yes	Go to the next step.
		No	Replace PCV valve, then go to Step 15.
11	**INSPECT FUEL LINE PRESSURE** • Perform the "FUEL LINE PRESSURE INSPECTION". (See 01–14A–7 FUEL LINE PRESSURE INSPECTION [L3, AJ].) • Is there any malfunction?	Yes	If fuel pressure is too high, replace fuel pump unit, then go to Step 15. If fuel line pressure is low, go to the next step.
		No	Go to Step 13.
12	**INSPECT FUEL LEAKAGE FROM FUEL PUMP TO FUEL DELIVERY PIPE** • Visually inspect fuel line for any leakage. • Is any fuel leakage found?	Yes	Replace suspected fuel line, then go to Step 14.
		No	Inspect for foreign materials or stain inside fuel filter (low-pressure). If for foreign materials or stain inside fuel filter (low-pressure), clean of fuel tank and filter. Then go to Step 15.
13	**INSPECT VARIABLE VALVE TIMING CONTROL SYSTEM OPERATION** • Inspect variable valve timing control system operation for right bank (with P2188) or left bank (with P2190). (See 01–03C–74 Variable Valve Timing Control System Operation Inspection.) • Does variable valve timing control system work properly?	Yes	Go to the next step.
		No	Repair or replace malfunctioning part according to inspection results, then go to Step 15.
14	**INSPECT EGR VALVE STUCK OPEN** • Remove EGR valve. • Does EGR valve stuck open?	Yes	Clean or replace EGR valve, then go to the next step.
		No	Go to the next step.

STEP	INSPECTION		ACTION
15	**VERIFY TROUBLESHOOTING OF DTC P2188 AND P2190 COMPLETED** • Make sure to reconnect all disconnected connectors. • Clear DTC from PCM memory using WDS or equivalent. • Perform the KOER SELF TEST using the WDS or equivalent. (See 01–02C–8 KOEO/KOER SELF TEST [AJ].) • Is the PENDING CODE same DTC present?	Yes	Replace PCM, then go to the next step. (See 01–40C–5 PCM REMOVAL/INSTALLATION [AJ].)
		No	Go to the next step.
16	**VERIFY AFTER REPAIR PROCEDURE** • Perform the "After Repair Procedure". (See 01–02C–7 AFTER REPAIR PROCEDURE [AJ].) • Are any DTCs present?	Yes	Go to the applicable DTC inspection. (See 01–02C–13 DTC TABLE [AJ].)
		No	Troubleshooting completed.

DTC P2195, P2197 [AJ]

E6U010200000WA5

DTC P2195 DTC P2197	**HO2S (RF) signal stuck lean** **HO2S (LF) signal stuck lean**
DETECTION CONDITION	• The PCM monitors the HO2S (RF, LF) output voltage when the following conditions are met. If output voltage is less than **0.45 V** for **41 s**, the PCM determines that the HO2S (RF, LF) signal remains lean. **MONITORING CONDITION** — Fuel injection control system status: feedback zone — HO2S (RF, LH) voltage is **above 0.1 V** **Diagnostic support note** • This is an intermittent monitor. (HO2S) • The MIL illuminates if the PCM detects the above malfunctioning condition in two consecutive drive cycles or in one drive cycle while the DTC for the same malfunction has been stored in the PCM. • PENDING CODE is available if the PCM detects the above malfunction conditions during the first drive cycle. • FREEZE FRAME DATA is available. • The DTC is stored in the PCM memory.
POSSIBLE CAUSE	• HO2S (RF, LF) malfunction • Fuel injector malfunction • Insufficient fuel line pressure • Leakage exhaust gas • Air suction at intake-air system malfunction • Leakage fuel • MAF sensor malfunction • ECT sensor malfunction • PCM malfunction

Diagnostic procedure

STEP	INSPECTION		ACTION
1	**VERIFY FREEZE FRAME DATA AND DIAGNOSTIC MONITORING TEST RESULTS HAVE BEEN RECORDED** • Have FREEZE FRAME DATA and DIAGNOSTIC MONITORING TEST RESULTS (HO2S related) been recorded?	Yes	Go to the next step.
		No	Record FREEZE FRAME DATA and DIAGNOSTIC MONITORING TEST RESULTS on repair order, then go to the next step.
2	**VERIFY RELATED REPAIR INFORMATION AVAILABILITY** • Verify related Service Bulletins and/or on-line repair information availability. • Is any related repair information available?	Yes	Perform the repair or diagnosis according to the available repair information. • If the vehicle is not repaired, go to the next step.
		No	Go to the next step.
3	**VERIFY RELATED PENDING CODE OR STORED DTC** • Turn the ignition switch off, then ON (Engine off). • Verify the related PENDING CODE or stored DTCs. • Is the DTC P2177, P2187 (with DTC P2195) or P2179, P2189 (with DTC P2197) also present?	Yes	Go to the applicable DTC inspection. (See 01–02C–13 DTC TABLE [AJ].)
		No	Go to the next step.

STEP	INSPECTION		ACTION
4	**IDENTIFY TRIGGER DTC FOR FREEZE FRAME DATA** • Is DTC P2195 or P2197 on FREEZE FRAME DATA?	Yes	Go to the next step.
		No	Go to the FREEZE FRAME DATA DTC inspection. (See 01–02C–13 DTC TABLE [AJ].)
5	**VERIFY CURRENT INPUT SIGNAL STATUS** • Connect the WDS or equivalent to the DLC-2. • Verify the following PIDs. (See 01–40C–6 PCM INSPECTION [AJ].) — APP1 — APP2 — ECT — MAF — TP_REL — VSS • Are the PIDs normal?	Yes	Go to the next step.
		No	Inspect the malfunctioning part according to the inspection results. Then go to Step 13.
6	**VERIFY CURRENT INPUT SIGNAL STATUS UNDER FREEZE FRAME DATA CONDITION** • Connect the WDS or equivalent to the DLC-2. • Verify the following PIDs under the FREEZE FRAME DATA condition. (See 01–40C–6 PCM INSPECTION [AJ].) — APP1 — APP2 — ECT — MAF — TP_REL — VSS • Are the PIDs normal?	Yes	Go to the next step.
		No	Inspect the malfunctioning part according to the inspection results. Then go to Step 13.
7	**INSPECT INTAKE AIR SYSTEM FOR EXCESSIVE AIR SUCTION** • Visually inspect for looseness, cracks or damage to the hoses in intake-air system. • Is there any malfunction?	Yes	Repair or replace the malfunctioning part, then go to Step 13.
		No	Go to the next step.
8	**VERIFY CURRENT INPUT SIGNAL STATUS OF MAF SENSOR** • Connect the WDS or equivalent to the DLC-2. • Start the engine. • Access the MAF PID. • Verify that the MAF PID changes quickly according to engine speed. • Is the PID normal?	Yes	Go to the next step.
		No	Replace the MAF/IAT sensor, then go to Step 13.
9	**INSPECT HO2S (RF, LF)** • Inspect the HO2S (RF) (with DTC P2195) or the HO2S (LF) (with DTC P2197). (See 01–40C–33 HEATED OXYGEN SENSOR (HO2S) INSPECTION [AJ].) • Is there any malfunction?	Yes	Replace the malfunctioning HO2S, then go to Step 13.
		No	Go to the next step.
10	**INSPECT FUEL INJECTOR** • Inspect the fuel injector for the right bank (with DTC P2195) or the left bank (with DTC P2197). (See 01–14A–32 FUEL INJECTOR INSPECTION [AJ].) • Is there any malfunction?	Yes	Replace the suspected fuel injector, then go to Step 13. (See 01–14A–27 FUEL INJECTOR REMOVAL/ INSTALLATION [AJ].)
		No	Go to the next step.
11	**INSPECT FUEL LINE PRESSURE** • Perform the "FUEL LINE PRESSURE INSPECTION". (See 01–14A–7 FUEL LINE PRESSURE INSPECTION [L3, AJ].) • Is there any malfunction?	Yes	Go to the next step.
		No	Go to Step 13.
12	**INSPECT FUEL SYSTEM FOR FUEL LEAKAGE** • Visually inspect for fuel leakage in the fuel system. • Is there fuel leakage?	Yes	Repair or replace the malfunctioning part, then go to the next step.
		No	Replace the fuel pump unit, then go to the next step. (See 01–14A–13 FUEL PUMP UNIT REMOVAL/ INSTALLATION [L3, AJ].)

STEP	INSPECTION		ACTION
13	**VERIFY TROUBLESHOOTING OF DTC P2195 AND P2197 COMPLETED** • Make sure to reconnect all disconnected connectors. • Clear the DTC from the PCM memory using the WDS or equivalent. • Run Drive Mode 1 and 3 (See 01–02C–8 OBD-II DRIVE MODE [AJ].) • Is the PENDING CODE for this DTC present?	Yes	Replace the PCM, then go to the next step. (See 01–40C–5 PCM REMOVAL/INSTALLATION [AJ].)
		No	Go to the next step.
14	**VERIFY AFTER REPAIR PROCEDURE** • Perform "AFTER REPAIR PROCEDURE". (See 01–02C–7 AFTER REPAIR PROCEDURE [AJ].) • Are any DTCs present?	Yes	Go to the applicable DTC inspection. (See 01–02C–13 DTC TABLE [AJ].)
		No	Troubleshooting completed.

DTC P2196, P2198 [AJ]

E6U010200000WA6

DTC P2196 DTC P2198	**HO2S (RF) signal stuck rich** **HO2S (LF) signal stuck rich**
DETECTION CONDITION	• The PCM monitors the HO2S (RF, LF) output voltage when the following conditions are met. If output voltage is more than **0.45 V** for **41 s**, the PCM determines that the HO2S (RF, LF) signal remains rich. **MONITORING CONDITION** — Fuel injection control system status: feedback zone **Diagnostic support note** • This is an intermittent monitor (HO2S). • The MIL illuminates if the PCM detects the above malfunctioning condition in two consecutive drive cycles or in one drive cycle while the DTC for the same malfunction has been stored in the PCM. • PENDING CODE is available if the PCM detects the above malfunction conditions during the first drive cycle. • FREEZE FRAME DATA is available. • The DTC is stored in the PCM memory.
POSSIBLE CAUSE	• HO2S (RF, LF) malfunction • Fuel injector malfunction • Excessive fuel pressure • Restriction in intake-air system • MAF sensor malfunction • ECT sensor malfunction • PCM malfunction

Diagnostic procedure

STEP	INSPECTION		ACTION
1	**VERIFY FREEZE FRAME DATA AND DIAGNOSTIC MONITORING TEST RESULTS HAVE BEEN RECORDED** • Have FREEZE FRAME DATA and DIAGNOSTIC MONITORING TEST RESULTS (HO2S related) been recorded?	Yes	Go to the next step.
		No	Record FREEZE FRAME DATA and DIAGNOSTIC MONITORING TEST RESULTS on repair order, then go to the next step.
2	**VERIFY RELATED REPAIR INFORMATION AVAILABILITY** • Verify related Service Bulletins and/or on-line repair information availability. • Is any related repair information available?	Yes	Perform the repair or diagnosis according to the available repair information. • If the vehicle is not repaired, go to the next step.
		No	Go to the next step.
3	**VERIFY RELATED PENDING CODE OR STORED DTC** • Turn the ignition switch off, then ON (Engine off). • Verify the related PENDING CODE or stored DTCs. • Is the DTC P0178, P2188 (with DTC P2196) or P0180, P2190 (with DTC P2198) also present?	Yes	Go to the appropriate DTC inspection. (See 01–02C–13 DTC TABLE [AJ].)
		No	Go to the next step.
4	**IDENTIFY TRIGGER DTC FOR FREEZE FRAME DATA** • Is DTC P2196 or P2198 in the FREEZE FRAME DATA?	Yes	Go to the next step.
		No	Go to the FREEZE FRAME DATA DTC inspection. (See 01–02C–13 DTC TABLE [AJ].)

STEP	INSPECTION		ACTION
5	**VERIFY CURRENT INPUT SIGNAL STATUS** • Connect the WDS or equivalent to the DLC-2. • Verify the following PIDs. (See 01–40C–6 PCM INSPECTION [AJ].) — APP1 — APP2 — ECT — MAF — TP_REL — VSS • Are the PIDs normal?	Yes	Go to the next step.
		No	Inspect the malfunctioning part according to the inspection results. Then go to Step 11.
6	**VERIFY CURRENT INPUT SIGNAL STATUS UNDER FREEZE FRAME DATA CONDITION** • Connect the WDS or equivalent to the DLC-2. • Verify the following PIDs under the FREEZE FRAME DATA condition. — APP1 — APP2 — ECT — MAF — TP_REL — VSS • Are the PIDs normal?	Yes	Go to the next step.
		No	Inspect the malfunctioning part according to the inspection results. Then go to Step 11.
7	**VERIFY CURRENT INPUT SIGNAL STATUS OF MAF SENSOR** • Connect the WDS or equivalent to the DLC-2. • Start the engine. • Access the MAF PID. • Verify that the MAF PID changes quickly according to the engine speed. • Is the PID normal?	Yes	Go to the next step.
		No	Replace the MAF/IAT sensor, then go to Step 11.
8	**INSPECT HO2S (RF, LF)** • Inspect the HO2S (RF) (with DTC P2196) or HO2S (LF) (with DTC P2198). (See 01–40C–33 HEATED OXYGEN SENSOR (HO2S) INSPECTION [AJ].) • Is there any malfunction?	Yes	Replace HO2S malfunction, then go to Step 11.
		No	Go to the next step.
9	**INSPECT FUEL INJECTOR** • Inspect fuel injector for the right bank (with DTC P2196) or the left bank (with DTC P2198). (See 01–14A–32 FUEL INJECTOR INSPECTION [AJ].) • Is there any malfunction?	Yes	Replace the suspected fuel injector, then go to Step 11. (See 01–14A–27 FUEL INJECTOR REMOVAL/INSTALLATION [AJ].)
		No	Go to the next step.
10	**INSPECT FUEL LINE PRESSURE** • Perform the "FUEL LINE PRESSURE INSPECTION". (See 01–14A–7 FUEL LINE PRESSURE INSPECTION [L3, AJ].) • Is there any malfunction?	Yes	Replace the fuel pump unit, then go to the next step. (See 01–14A–13 FUEL PUMP UNIT REMOVAL/INSTALLATION [L3, AJ].)
		No	Go to the next step.
11	**VERIFY TROUBLESHOOTING OF DTC P2196 AND P2198 COMPLETED** • Make sure to reconnect all disconnected connectors. • Clear the DTC from the PCM memory using the WDS or equivalent. • Run Drive Mode 1 and 3 (See 01–02C–8 OBD-II DRIVE MODE [AJ].) • Is the PENDING CODE for this DTC present?	Yes	Replace the PCM, then go to the next step. (See 01–40C–5 PCM REMOVAL/INSTALLATION [AJ].)
		No	Go to the next step.
12	**VERIFY AFTER REPAIR PROCEDURE** • Perform the "AFTER REPAIR PROCEDURE". (See 01–02C–7 AFTER REPAIR PROCEDURE [AJ].) • Are any DTCs present?	Yes	Go to the applicable DTC inspection. (See 01–02C–13 DTC TABLE [AJ].)
		No	Troubleshooting completed.

DTC P2227 [AJ]

E6U010200000WA7

DTC P2227	EGR boost sensor circuit performance problem
DETECTION CONDITION	• The PCM monitors the differences between the intake manifold vacuum and atmospheric pressure at idle, which the EGR boost sensor detects by switching the EGR boost sensor solenoid. If the difference is **6.4 kPa {48 mmHg, 1.9 inHg} or below**, the PCM determines that there is a EGR boost sensor performance problem. **Diagnostic support note** • This is a continuous monitor (CCM). • MIL illuminates if the PCM detects the above malfunction condition in two consecutive drive cycles or in one drive cycle while the DTC for the same malfunction has been stored in the PCM. • PENDING CODE is available if the PCM detects the above malfunction condition during the first drive cycle. • FREEZE FRAME DATA is available. • DTC is stored in the PCM memory.
POSSIBLE CAUSE	• EGR boost sensor malfunction or substandard performance • EGR boost sensor solenoid valve malfunction • Loosed, damaged, misconnected, clogged or frozen moisture in vacuum hose from EGR boost sensor solenoid valve to EGR boost sensor • Loosed, damaged, misconnected, clogged or frozen moisture in vacuum hose from EGR boost sensor solenoid valve to EGR pipe • PCM malfunction

Diagnostic procedure

STEP	INSPECTION		ACTION
1	**VERIFY FREEZE FRAME DATA HAS BEEN RECORDED** • Has FREEZE FRAME DATA been recorded?	Yes	Go to the next step.
		No	Record FREEZE FRAME DATA on repair order, then go to the next step.
2	**VERIFY RELATED REPAIR INFORMATION AVAILABILITY** • Check for related Service Bulletins and/or on-line repair information availability. • Is any related repair information available?	Yes	Perform repair or diagnosis according to the available repair information. • If the vehicle is not repaired, go to the next step.
		No	Go to the next step.
3	**VERIFY STORED DTC** • Turn ignition switch to OFF, then ON (Engine off). • Have DTC P2144 or P2145 been stored?	Yes	Inspect and repair DTC P2144 or P2145. (See 01–02C–191 DTC P2144 [AJ].) (See 01–02C–193 DTC P2145 [AJ].)
		No	Go to the next step.
4	**IDENTIFY TRIGGER DTC FOR FREEZE FRAME DATA** • Is DTC P2227 on FREEZE FRAME DATA?	Yes	Go to the next step.
		No	Go to troubleshooting procedures for DTC on FREEZE FRAME DATA.
5	**INSPECT CONNECTION OF EGR BOOST SENSING RELATED VACUUM HOSES** • Inspect the following vacuum hoses for loose, damage, improper connection and clogging. — From EGR boost sensor to EGR boost sensor solenoid valve — From EGR boost sensor solenoid valve to EGR pipe. • Are they normal?	Yes	Go to the next step.
		No	Repair or replace vacuum hose, then go to Step 9.
6	**INSPECT EGR BOOST SENSOR SOLENOID VALVE AIR FILTER FOR CLOG** • Is EGR boost sensor solenoid valve air filter clogged?	Yes	Repair air clogging, then go to Step 9.
		No	Go to the next step.
7	**INSPECT EGR BOOST SENSOR SOLENOID VALVE** • Inspect EGR boost sensor solenoid valve. (See 01–16A–20 EGR BOOST SENSOR SOLENOID VALVE INSPECTION [AJ].) • Is there any malfunction?	Yes	Replace EGR boost sensor solenoid valve, then go to Step 9.
		No	Go to the next step.
8	**INSPECT EGR BOOST SENSOR** • Inspect EGR boost sensor. (See 01–40C–37 EGR BOOST SENSOR INSPECTION [AJ].) • Is there any malfunction?	Yes	Replace EGR boost sensor, then go to the next step.
		No	Go to the next step.

STEP	INSPECTION		ACTION
9	**VERIFY TROUBLESHOOTING OF DTC P2227 COMPLETED** • Make sure to reconnect all disconnected connectors. • Turn the ignition switch to the ON position. • Clear the DTC from the memory using the WDS or equivalent. • Run DRIVE MODE except MODE 4. (See 01–02C–8 OBD-II DRIVE MODE [AJ].) • Stop vehicle. • Is same DTC present?	Yes	Replace PCM, go to the next step. (See 01–40C–5 PCM REMOVAL/INSTALLATION [AJ].)
		No	Go to the next step.
10	**VERIFY AFTER REPAIR PROCEDURE** • Perform "AFTER REPAIR PROCEDURE". (See 01–02C–7 AFTER REPAIR PROCEDURE [AJ].) • Are any DTCs present?	Yes	Go to the applicable DTC inspection. (See 01–02C–13 DTC TABLE [AJ].)
		No	Troubleshooting completed.

DTC P2228 [AJ]

E6U010200000WA8

DTC P2228	EGR boost sensor circuit low input
DETECTION CONDITION	• The PCM monitors the input voltage from the EGR boost sensor. If the input voltage at PCM terminal 1AL is **0.35 V or below**, the PCM determines that the EGR boost circuit has a malfunction. **Diagnostic support note** • This is a continuous monitor (CCM). • MIL illuminates if the PCM detects the above malfunction condition during the first drive cycle. • FREEZE FRAME DATA is available. • DTC is stored in the PCM memory.
POSSIBLE CAUSE	• EGR boost sensor malfunction • Connector or terminal malfunction • Open circuit between EGR boost sensor terminal C and PCM terminal 1AZ • Short to ground circuit between EGR boost sensor terminal A and PCM terminal 1AL • PCM malfunction

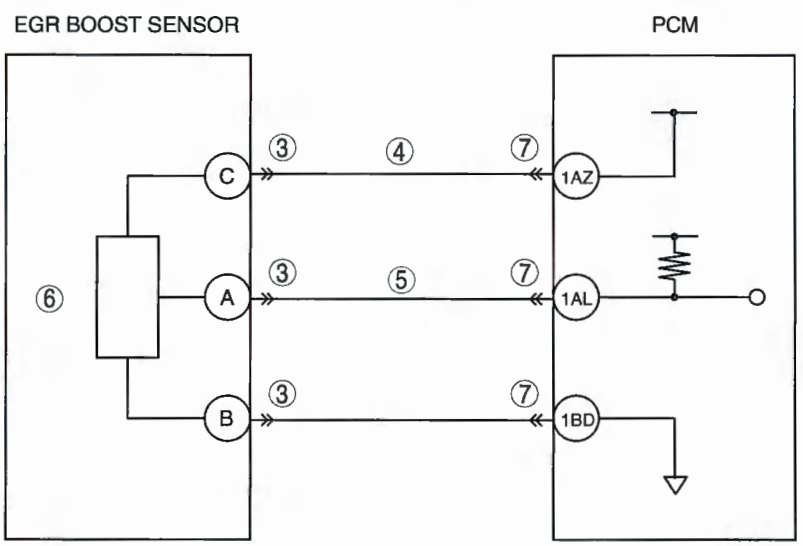

EGR BOOST SENSOR
HARNESS SIDE CONNECTOR

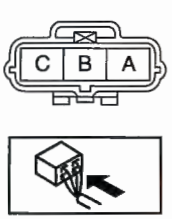

PCM
WIRING HARNESS-SIDE CONNECTOR

1BE	1BA	1AW	1AS	1AO	1AK	1AG	1AC	1Y	1U	1Q	1M	1I	1E	1A
1BF	1BB	1AX	1AT	1AP	1AL	1AH	1AD	1Z	1V	1R	1N	1J	1F	1B
1BG	1BC	1AY	1AU	1AQ	1AM	1AI	1AE	1AA	1W	1S	1O	1K	1G	1C
1BH	1BD	1AZ	1AV	1AR	1AN	1AJ	1AF	1AB	1X	1T	1P	1L	1H	1D

Diagnostic procedure

STEP	INSPECTION		ACTION
1	**VERIFY FREEZE FRAME DATA HAS BEEN RECORDED** • Has FREEZE FRAME DATA been recorded?	Yes	Go to the next step.
		No	Record FREEZE FRAME DATA on repair order, then go to the next step.
2	**VERIFY RELATED REPAIR INFORMATION AVAILABILITY** • Check for related Service Bulletins and/or on-line repair information availability. • Is any related repair information available?	Yes	Perform repair or diagnosis according to the available repair information. • If the vehicle is not repaired, go to the next step.
		No	Go to the next step.
3	**INSPECT EGR BOOST SENSOR CONNECTOR FOR POOR CONNECTION** • Turn the ignition switch off. • Disconnect the EGR boost sensor connector. • Check for poor connection (such as damaged, pulled-out pins, and corrosion). • Is there any malfunction?	Yes	Repair or replace the terminal, then go to Step 9.
		No	Go to the next step.
4	**INSPECT EGR BOOST SENSOR POWER CIRCUIT FOR OPEN CIRCUIT** • Turn the ignition switch to the ON position. • Measure voltage between EGR boost sensor terminal C and body ground. • Is there voltage?	Yes	Go to the next step.
		No	Repair or replace harness for open circuit, then go to Step 9.
5	**INSPECT EGR BOOST SENSOR SIGNAL CIRCUIT FOR SHORT TO GROUND** • Turn the ignition switch off. • Check continuity between EGR boost sensor terminal A and body ground. • Is there continuity?	Yes	Repair or replace harness for short to ground, then go to Step 9.
		No	Go to the next step.
6	**INSPECT EGR BOOST SENSOR** • Inspect EGR boost sensor. (See 01–40C–37 EGR BOOST SENSOR INSPECTION [AJ].) • Is there any malfunction?	Yes	Replace EGR boost sensor, then go to Step 9.
		No	Go to the next step.
7	**INSPECT PCM CONNECTOR FOR POOR CONNECTION** • Turn the ignition switch off. • Disconnect PCM connector. • Check for poor connection (such as damaged, pulled-out pins, and corrosion). • Is there any malfunction?	Yes	Repair or replace the terminal, then go to Step 9.
		No	Go to the next step.
8	**INSPECT EGR BOOST SENSOR SIGNAL CIRCUIT FOR OPEN CIRCUIT** • Turn the ignition switch off. • Check for continuity between EGR boost sensor terminal A and PCM terminal 1AL. • Is there continuity?	Yes	Go to the next step.
		No	Repair or replace harness for open circuit, then go to the next step.
9	**VERIFY TROUBLESHOOTING OF DTC P2228 COMPLETED** • Make sure to reconnect all disconnected connectors. • Clear DTC from PCM memory using WDS or equivalent. • Perform the KOEO or KOER SELF TEST using the WDS or equivalent. (See 01–02C–8 KOEO/KOER SELF TEST [AJ].) • Is the PENDING CODE same DTC present?	Yes	Replace PCM, then go to the next step. (See 01–40C–5 PCM REMOVAL/INSTALLATION [AJ].)
		No	Go to the next step.
10	**VERIFY AFTER REPAIR PROCEDURE** • Perform "AFTER REPAIR PROCEDURE". (See 01–02C–7 AFTER REPAIR PROCEDURE [AJ].) • Are any DTCs present?	Yes	Go to the applicable DTC inspection. (See 01–02C–13 DTC TABLE [AJ].)
		No	Troubleshooting completed.

DTC P2229 [AJ]

E6U010200000WA9

DTC P2229	EGR boost sensor circuit high input
DETECTION CONDITION	• The PCM monitors the input voltage from the EGR boost sensor. If the input voltage at PCM terminal 1AI is **4.9 V or above**, the PCM determines that EGR boost sensor circuit has a malfunction. **Diagnostic support note** • This is a continuous monitor (CCM). • MIL illuminates if the PCM detects the above malfunction condition during the first drive cycle. • FREEZE FRAME DATA is available. • DTC is stored in the PCM memory.
POSSIBLE CAUSE	• EGR boost sensor malfunction • Connector or terminal malfunction • Short to power circuit between EGR boost sensor terminal A and PCM terminal 1AL • Open circuit between EGR boost sensor terminal B and PCM terminal 1BD • PCM malfunction

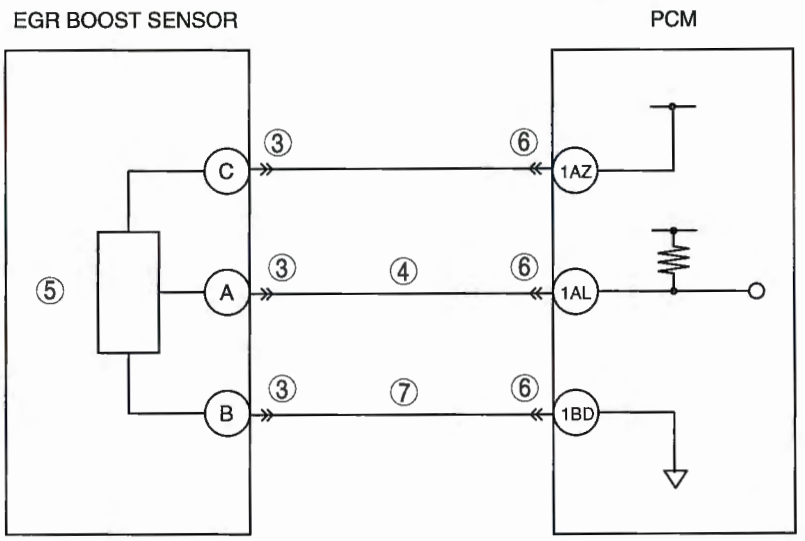

EGR BOOST SENSOR
HARNESS SIDE CONNECTOR

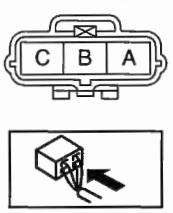

PCM
WIRING HARNESS-SIDE CONNECTOR

1BE	1BA	1AW	1AS	1AO	1AK	1AG	1AC	1Y	1U	1Q	1M	1I	1E	1A
1BF	1BB	1AX	1AT	1AP	1AL	1AH	1AD	1Z	1V	1R	1N	1J	1F	1B
1BG	1BC	1AY	1AU	1AQ	1AM	1AI	1AE	1AA	1W	1S	1O	1K	1G	1C
1BH	1BD	1AZ	1AV	1AR	1AN	1AJ	1AF	1AB	1X	1T	1P	1L	1H	1D

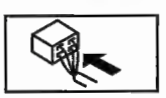

Diagnostic procedure

STEP	INSPECTION		ACTION
1	**VERIFY FREEZE FRAME DATA HAS BEEN RECORDED** • Has FREEZE FRAME DATA been recorded?	Yes	Go to the next step.
		No	Record FREEZE FRAME DATA on repair order, then go to the next step.
2	**VERIFY RELATED REPAIR INFORMATION AVAILABILITY** • Check for related Service Bulletins and/or on-line repair information availability. • Is any related repair information available?	Yes	Perform repair or diagnosis according to the available repair information. • If the vehicle is not repaired, go to the next step.
		No	Go to the next step.
3	**INSPECT EGR BOOST SENSOR CONNECTOR FOR POOR CONNECTION** • Turn the ignition switch off. • Disconnect the EGR boost sensor connector. • Check for poor connection (such as damaged, pulled-out pins, and corrosion). • Is there any malfunction?	Yes	Repair or replace the terminal, then go to Step 8.
		No	Go to the next step.
4	**INSPECT EGR BOOST SENSOR SIGNAL CIRCUIT FOR SHORT TO POWER** • Turn the ignition switch to the ON position. • Measure voltage between EGR boost sensor terminal A and body ground. • Is voltage **B+**?	Yes	Repair or replace harness for short to power, then go to Step 8.
		No	Go to the next step.
5	**INSPECT EGR BOOST SENSOR** • Inspect EGR boost sensor. (See 01–40C–37 EGR BOOST SENSOR INSPECTION [AJ].) • Is there any malfunction?	Yes	Replace EGR boost sensor, then go to Step 8.
		No	Go to the next step.
6	**INSPECT PCM CONNECTOR FOR POOR CONNECTION** • Turn the ignition switch off. • Disconnect PCM connector. • Check for poor connection (such as damaged, pulled-out pins, and corrosion). • Is there any malfunction?	Yes	Repair or replace the terminal, then go to Step 8.
		No	Go to the next step.
7	**INSPECT EGR BOOST SENSOR GROUND CIRCUIT FOR OPEN CIRCUIT** • Turn the ignition switch off. • Check for continuity between EGR boost sensor terminal B and PCM terminal 1BD. • Is there continuity?	Yes	Go to the next step.
		No	Repair or replace harness for open circuit, then go to the next step.
8	**VERIFY TROUBLESHOOTING OF DTC P2229 COMPLETED** • Make sure to reconnect all disconnected connectors. • Clear DTC from PCM memory using WDS or equivalent. • Perform the KOEO or KOER SELF TEST using the WDS or equivalent. (See 01–02C–8 KOEO/KOER SELF TEST [AJ].) • Is the PENDING CODE same DTC present?	Yes	Replace PCM, then go to the next step. (See 01–40C–5 PCM REMOVAL/INSTALLATION [AJ].)
		No	Go to the next step.
9	**VERIFY AFTER REPAIR PROCEDURE** • Perform "AFTER REPAIR PROCEDURE". (See 01–02C–7 AFTER REPAIR PROCEDURE [AJ].) • Are any DTCs present?	Yes	Go to the applicable DTC inspection. (See 01–02C–13 DTC TABLE [AJ].)
		No	Troubleshooting completed.

DTC P2401 [AJ]

E6U010200000WB0

DTC P2401	EVAP system leak detection pump control circuit low
DETECTION CONDITION	• The PCM monitors the pump load current (EVAP line pressure) when the EVAP leak monitor is operating. If the pump load current is lower than specified, the PCM determines that the EVAP system leak detection pump motor circuit has a malfunction. **Diagnostic support note** • This is an intermittent monitor (CCM). • MIL illuminates if the PCM detects the above malfunction condition in two consecutive drive cycles or in one drive cycle while the DTC for the same malfunction has been stored in the PCM. • PENDING CODE is available if the PCM detects the above malfunction condition during the first drive cycle. • FREEZE FRAME DATA is available. • DTC is stored in the PCM memory.
POSSIBLE CAUSE	• EVAP system leak detection pump malfunction • Connector or terminal malfunction • Open circuit between main relay terminal C and EVAP system leak detection pump terminal A • Short to ground circuit between the EVAP system leak detection pump terminal D and PCM terminal 1Y • Open circuit between EVAP system leak detection pump terminal D and PCM terminal 1Y • PCM malfunction

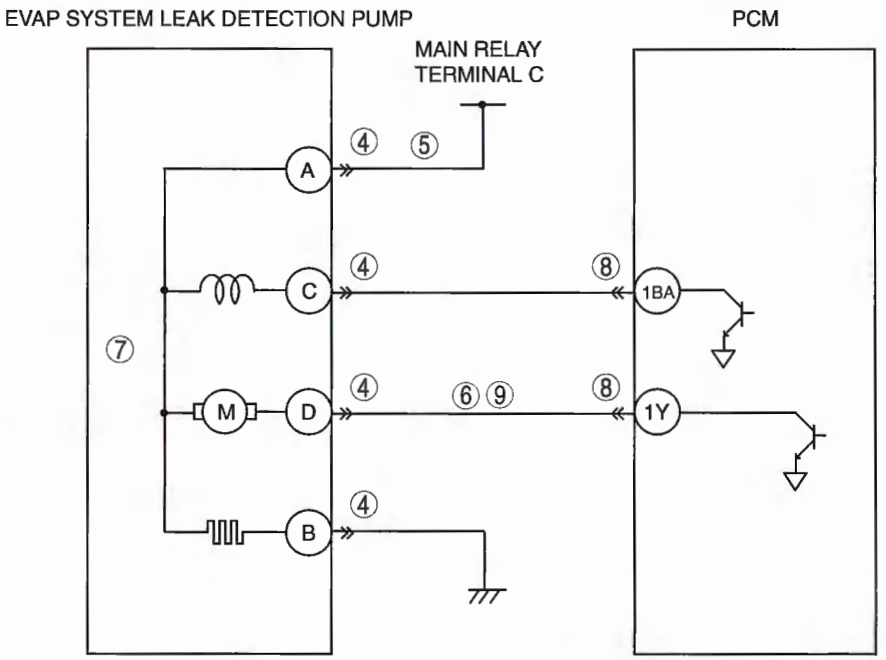

EVAP SYSTEM LEAK DETECTION PUMP HARNESS SIDE CONNECTOR

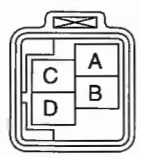



PCM WIRING HARNESS-SIDE CONNECTOR

1BE	1BA	1AW	1AS	1AO	1AK	1AG	1AC	1Y	1U	1Q	1M	1I	1E	1A
1BF	1BB	1AX	1AT	1AP	1AL	1AH	1AD	1Z	1V	1R	1N	1J	1F	1B
1BG	1BC	1AY	1AU	1AQ	1AM	1AI	1AE	1AA	1W	1S	1O	1K	1G	1C
1BH	1BD	1AZ	1AV	1AR	1AN	1AJ	1AF	1AB	1X	1T	1P	1L	1H	1D

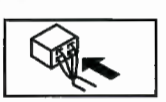

Diagnostic procedure

STEP	INSPECTION		ACTION
1	**VERIFY FREEZE FRAME DATA HAS BEEN RECORDED** • Has FREEZE FRAME DATA been recorded?	Yes	Go to the next step.
		No	Record FREEZE FRAME DATA on repair order, then go to the next step.
2	**VERIFY RELATED REPAIR INFORMATION AVAILABILITY** • Check for related Service Bulletins and/or on-line repair information availability. • Is any related repair information available?	Yes	Perform repair or diagnosis according to the available repair information. • If the vehicle is not repaired, go to the next step.
		No	Go to the next step.
3	**VERIFY RELATED PENDING CODE OR STORED DTCs** • Turn ignition switch to OFF, then ON (Engine off). • Verify related pending code or stored DTCs. • Is DTC P2405 present?	Yes	Go to appropriate DTC inspection. (See 01–02C–220 DTC P2405 [AJ].)
		No	Go to the next step.
4	**INSPECT EVAP SYSTEM LEAK DETECTION PUMP CONNECTOR FOR POOR CONNECTION** • Turn the ignition switch off. • Disconnect the EVAP system leak detection pump connector. • Check for poor connection (such as damaged, pulled-out pins, and corrosion). • Is there any malfunction?	Yes	Repair or replace the terminal, then go to Step 10.
		No	Go to the next step.
5	**INSPECT EVAP SYSTEM LEAK DETECTION PUMP POWER CIRCUIT FOR OPEN CIRCUIT** • Turn the ignition switch off. • Disconnect main relay. • Disconnect EVAP system leak detection pump connector. • Check continuity between EVAP system leak detection pump terminal A and main relay terminal C. • Is there continuity?	Yes	Repair or replace harness for open circuit, then go to Step 10.
		No	Go to the next step.
6	**INSPECT EVAP SYSTEM LEAK DETECTION PUMP SIGNAL CIRCUIT FOR SHORT TO GROUND** • Turn the ignition switch off. • Disconnect EVAP system leak detection pump connector. • Check continuity between EVAP system leak detection pump terminal D and body ground. • Is there continuity?	Yes	Repair or replace harness for short to ground, then go to Step 10.
		No	Go to the next step.
7	**INSPECT EVAP SYSTEM LEAK DETECTION PUMP** • Inspect EVAP system leak detection pump. (See 01–16A–11 EVAPORATIVE EMISSION (EVAP) SYSTEM LEAK DETECTION PUMP INSPECTION [L3, AJ].) • Is there any malfunction?	Yes	Replace EVAP system leak detection pump, then go to Step 10. (See 01–16A–5 EVAPORATIVE EMISSION (EVAP) CONTROL SYSTEM COMPONENT REMOVAL/ INSTALLATION [L3, AJ].)
		No	Go to the next step.
8	**INSPECT PCM CONNECTOR FOR POOR CONNECTION** • Turn the ignition switch off. • Disconnect PCM connector. • Check for poor connection (such as damaged, pulled-out pins, and corrosion). • Is there any malfunction?	Yes	Repair or replace the terminal, then go to Step 10.
		No	Go to the next step.
9	**INSPECT EVAP SYSTEM LEAK DETECTION PUMP SIGNAL CIRCUIT FOR OPEN CIRCUIT** • Turn the ignition switch off. • Disconnect EVAP system leak detection pump connector. • Check continuity between EVAP system leak detection pump terminal D and PCM terminal 1Y. • Is there continuity?	Yes	Go to the next step.
		No	Repair or replace harness for open circuit, then go to Step 10.

STEP	INSPECTION		ACTION
10	**VERIFY TROUBLESHOOTING OF DTC P2401 COMPLETED** • Make sure to reconnect all disconnected connectors. • Clear DTC from PCM memory using WDS or equivalent. • Perform the KOER SELF TEST using the WDS or equivalent. (See 01–02C–8 KOEO/KOER SELF TEST [AJ].) • Is the PENDING CODE same DTC present?	Yes	Replace PCM, then go to the next step. (See 01–40C–5 PCM REMOVAL/INSTALLATION [AJ].)
		No	Go to the next step.
11	**VERIFY AFTER REPAIR PROCEDURE** • Perform "AFTER REPAIR PROCEDURE". (See 01–02C–7 AFTER REPAIR PROCEDURE [AJ].) • Are any DTCs present?	Yes	Go to the applicable DTC inspection. (See 01–02C–13 DTC TABLE [AJ].)
		No	Troubleshooting completed.

DTC P2402 [AJ]

E6U010200000WB1

DTC P2402	EVAP system leak detection pump control circuit high
DETECTION CONDITION	• The PCM monitors the pump load current (EVAP line pressure) when the EVAP leak monitor is operating. If the pump load current is higher than specified, the PCM determines that the EVAP system leak detection pump motor circuit has a malfunction. **Diagnostic support note** • This is an intermittent monitor (CCM). • MIL illuminates if the PCM detects the above malfunction condition in two consecutive drive cycles or in one drive cycle while the DTC for the same malfunction has been stored in the PCM. • PENDING CODE is available if the PCM detects the above malfunction condition during the first drive cycle. • FREEZE FRAME DATA is available. • DTC is stored in the PCM memory.
POSSIBLE CAUSE	• EVAP system leak detection pump malfunction • Connector or terminal malfunction • Short to power circuit between EVAP system leak detection pump terminal D and PCM terminal 1Y • PCM malfunction

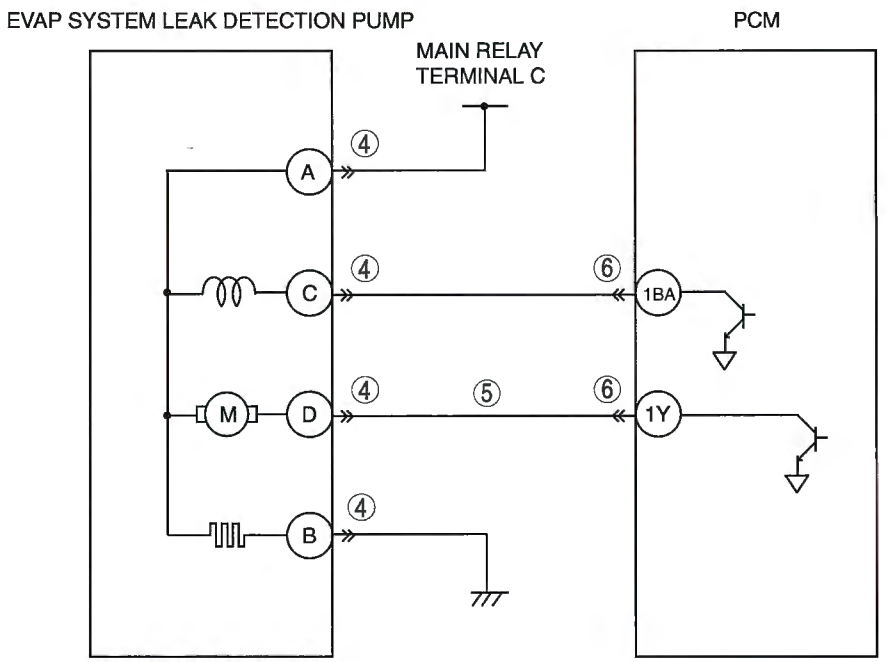

EVAP SYSTEM LEAK DETECTION PUMP
HARNESS SIDE CONNECTOR

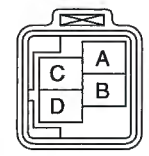



PCM
WIRING HARNESS-SIDE CONNECTOR

1BE	1BA	1AW	1AS	1AO	1AK	1AG	1AC	1Y	1U	1Q	1M	1I	1E	1A
1BF	1BB	1AX	1AT	1AP	1AL	1AH	1AD	1Z	1V	1R	1N	1J	1F	1B
1BG	1BC	1AY	1AU	1AQ	1AM	1AI	1AE	1AA	1W	1S	1O	1K	1G	1C
1BH	1BD	1AZ	1AV	1AR	1AN	1AJ	1AF	1AB	1X	1T	1P	1L	1H	1D

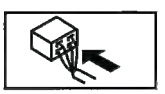

Diagnostic procedure

STEP	INSPECTION		ACTION
1	**VERIFY FREEZE FRAME DATA HAS BEEN RECORDED** • Has FREEZE FRAME DATA been recorded?	Yes	Go to the next step.
		No	Record FREEZE FRAME DATA on repair order, then go to the next step.
2	**VERIFY RELATED REPAIR INFORMATION AVAILABILITY** • Check for related Service Bulletins and/or on-line repair information availability. • Is any related repair information available?	Yes	Perform repair or diagnostic according to the available repair information. • If the vehicle is not repaired, then go to the next step.
		No	Go to the next step.
3	**VERIFY RELATED PENDING CODE OR STORED DTCs** • Turn ignition switch to OFF then ON (Engine off). • Verify related pending code or stored DTCs. • Are other DTCs present?	Yes	Go to appropriate DTC inspection. (See 01–02C–13 DTC TABLE [AJ].)
		No	Go to the next step.
4	**INSPECT EVAP SYSTEM LEAK DETECTION PUMP CONNECTOR FOR POOR CONNECTION** • Turn the ignition switch off. • Disconnect the EVAP system leak detection pump connector. • Check for poor connection (such as damaged, pulled-out pins, and corrosion). • Is there any malfunction?	Yes	Repair or replace the terminal, then go to Step 7.
		No	Go to the next step.
5	**INSPECT EVAP SYSTEM LEAK DETECTION PUMP SIGNAL CIRCUIT FOR SHORT TO POWER** • Turn the ignition switch to the ON position. • Measure voltage between EVAP system leak detection pump terminal D and body ground. • Is voltage reading?	Yes	Repair or replace harness for short to power, then go to Step 7.
		No	Go to the next step.
6	**INSPECT PCM CONNECTOR FOR POOR CONNECTION** • Turn the ignition switch off. • Disconnect PCM connector. • Check for poor connection (such as damaged, pulled-out pins, and corrosion). • Is there any malfunction?	Yes	Repair or replace the terminal, then go to the next step.
		No	Go to the next step.
7	**VERIFY TROUBLESHOOTING OF DTC P2402 COMPLETED** • Make sure to reconnect all disconnected connectors. • Clear DTC from PCM memory using WDS or equivalent. • Perform the KOER SELF TEST using the WDS or equivalent. (See 01–02C–8 KOEO/KOER SELF TEST [AJ].) • Is the PENDING CODE same DTC present?	Yes	Replace PCM, then go to the next step. (See 01–40C–5 PCM REMOVAL/INSTALLATION [AJ].)
		No	Go to the next step.
8	**VERIFY AFTER REPAIR PROCEDURE** • Perform "AFTER REPAIR PROCEDURE". (See 01–02C–7 AFTER REPAIR PROCEDURE [AJ].) • Are any DTCs present?	Yes	Go to the applicable DTC inspection. (See 01–02C–13 DTC TABLE [AJ].)
		No	Troubleshooting completed.

DTC P2404 [AJ]

E6U010200000WB2

DTC P2404	EVAP system leak detection pump sense circuit malfunction
DETECTION CONDITION	• The PCM monitors the pump load current (EVAP line pressure) when the EVAP leak monitor is operating. After obtaining the reference current value, if the time in which the pump load current reaches the reference current value is less than the specification, the PCM determines that the air filter is clogged. **Diagnostic support note** • This is an intermittent monitor (CCM). • MIL illuminates if the PCM detects the above malfunction condition in two consecutive drive cycles or in one drive cycle while the DTC for the same malfunction has been stored in the PCM. • PENDING CODE is available if the PCM detects the above malfunction condition during the first drive cycle. • FREEZE FRAME DATA is available. • DTC is stored in the PCM memory.
POSSIBLE CAUSE	• Air filter clogging • EVAP hose bending • PCM malfunction

Diagnostic procedure

STEP	INSPECTION		ACTION
1	**VERIFY FREEZE FRAME DATA HAS BEEN RECORDED** • Has FREEZE FRAME DATA been recorded?	Yes	Go to the next step.
		No	Record FREEZE FRAME DATA on repair order, then go to the next step.
2	**VERIFY RELATED REPAIR INFORMATION AVAILABILITY** • Check for related Service Bulletins and/or on-line repair information availability. • Is any related repair information available?	Yes	Perform repair or diagnostic according to the available repair information. • If the vehicle is not repaired, then go to the next step.
		No	Go to the next step.
3	**CHECK EVAP HOSE BENDING** • Inspect EVAP hose for bending. • Is EVAP hose normal?	Yes	Go to the next step.
		No	Repair or replace hose, then go to Step 5.
4	**CHECK AIR FILTER FOR CLOGGING** • Inspect air filter for clogging. • Is air filter normal?	Yes	Go to the next step.
		No	Replace air filter, then go to the next step.
5	**VERIFY TROUBLESHOOTING OF DTC P2404 COMPLETED** • Make sure to reconnect all disconnected connectors. • Clear DTC from PCM memory using WDS or equivalent. • Perform the KOER SELF TEST using the WDS or equivalent. (See 01–02C–8 KOEO/KOER SELF TEST [AJ].) • Is the PENDING CODE same DTC present?	Yes	Replace PCM, then go to the next step. (See 01–40C–5 PCM REMOVAL/INSTALLATION [AJ].)
		No	Go to the next step.
6	**VERIFY AFTER REPAIR PROCEDURE** • Perform "AFTER REPAIR PROCEDURE". (See 01–02C–7 AFTER REPAIR PROCEDURE [AJ].) • Are any DTCs present?	Yes	Go to the applicable DTC inspection. (See 01–02C–13 DTC TABLE [AJ].)
		No	Troubleshooting completed.

DTC P2405 [AJ]

E6U010200000WB3

DTC P2405	EVAP system leak detection pump sense circuit low input
DETECTION CONDITION	• The PCM monitors the pump load current (EVAP line pressure) when the EVAP leak monitor is operating. If the current is lower than the specification when the PCM obtains the reference current value, the PCM determines that the EVAP system leak detection pump orifice has malfunction. **Diagnostic support note** • This is an intermittent monitor (CCM). • MIL illuminates if the PCM detects the above malfunction condition in two consecutive drive cycles or in one drive cycle while the DTC for the same malfunction has been stored in the PCM. • PENDING CODE is available if the PCM detects the above malfunction condition during the first drive cycle. • FREEZE FRAME DATA is available. • DTC is stored in the PCM memory.
POSSIBLE CAUSE	• EVAP system leak detection pump orifice fallen off • EVAP system leak detection pump motor malfunction • PCM malfunction

Diagnostic procedure

STEP	INSPECTION		ACTION
1	**VERIFY FREEZE FRAME DATA HAS BEEN RECORDED** • Has FREEZE FRAME DATA been recorded?	Yes	Go to the next step.
		No	Record FREEZE FRAME DATA on repair order, then go to the next step.
2	**VERIFY RELATED REPAIR INFORMATION AVAILABILITY** • Check for related Service Bulletins and/or on-line repair information availability. • Is any related repair information available?	Yes	Perform repair or diagnosis according to the available repair information. • If the vehicle is not repaired, go to the next step.
		No	Replace EVAP system leak detection pump, then go to the next step. (See 01–16A–5 EVAPORATIVE EMISSION (EVAP) CONTROL SYSTEM COMPONENT REMOVAL/ INSTALLATION [L3, AJ].)
3	**VERIFY TROUBLESHOOTING OF DTC P2405 COMPLETED** • Make sure to reconnect all disconnected connectors. • Clear DTC from PCM memory using WDS or equivalent. • Perform the KOER SELF TEST using the WDS or equivalent. (See 01–02C–8 KOEO/KOER SELF TEST [AJ].) • Is the PENDING CODE same DTC present?	Yes	Replace PCM, then go to the next step. (See 01–40C–5 PCM REMOVAL/INSTALLATION [AJ].)
		No	Go to the next step.
4	**VERIFY AFTER REPAIR PROCEDURE** • Perform "AFTER REPAIR PROCEDURE". (See 01–02C–7 AFTER REPAIR PROCEDURE [AJ].) • Are any DTCs present?	Yes	Go to the applicable DTC inspection. (See 01–02C–13 DTC TABLE [AJ].)
		No	Troubleshooting completed.

DTC P2407 [AJ]

E6U010200000WB4

DTC P2407	EVAP system leak detection pump sense circuit intermittent
DETECTION CONDITION	• The PCM monitors the pump load current (EVAP line pressure) when the EVAP leak monitor is operating. When either of the following is detected **6 times or more** successively, the PCM determines that the EVAP system leak detection pump heater has a malfunction: — When obtaining the reference current value, the change in pump load current exceeds the specification. — After obtaining the reference current value, the pump load current is kept lower than the maximum pump load current for more than the specified time. **Diagnostic support note** • This is an intermittent monitor (CCM). • MIL illuminates if the PCM detects the above malfunction condition in two consecutive drive cycles or in one drive cycle while the DTC for the same malfunction has been stored in the PCM. • PENDING CODE is available if the PCM detects the above malfunction condition during the first drive cycle. • FREEZE FRAME DATA is available. • DTC is stored in the PCM memory.
POSSIBLE CAUSE	• EVAP system leak detection pump heater malfunction • PCM malfunction

Diagnostic procedure

STEP	INSPECTION		ACTION
1	**VERIFY FREEZE FRAME DATA HAS BEEN RECORDED** • Has FREEZE FRAME DATA been recorded?	Yes	Go to the next step.
		No	Record FREEZE FRAME DATA on repair order, then go to the next step.
2	**VERIFY RELATED REPAIR INFORMATION AVAILABILITY** • Check for related Service Bulletins and/or on-line repair information availability. • Is any related repair information available?	Yes	Perform repair or diagnosis according to the available repair information. • If the vehicle is not repaired, go to the next step.
		No	Go to the next step.
3	**INSPECT EVAP SYSTEM LEAK DETECTION PUMP HEATER** • Inspect EVAP system leak detection pump. (See 01–16A–11 EVAPORATIVE EMISSION (EVAP) SYSTEM LEAK DETECTION PUMP INSPECTION [L3, AJ].) • Is there any malfunction?	Yes	Replace EVAP system leak detection pump, then go to the next step. (See 01–16A–5 EVAPORATIVE EMISSION (EVAP) CONTROL SYSTEM COMPONENT REMOVAL/ INSTALLATION [L3, AJ].)
		No	Go to the next step.
4	**VERIFY TROUBLESHOOTING OF DTC P2407 COMPLETED** • Make sure to reconnect all disconnected connectors. • Clear DTC from PCM memory using WDS or equivalent. • Perform the KOER SELF TEST using the WDS or equivalent. (See 01–02C–8 KOEO/KOER SELF TEST [AJ].) • Is the PENDING CODE same DTC present?	Yes	Replace PCM, then go to the next step. (See 01–40C–5 PCM REMOVAL/INSTALLATION [AJ].)
		No	Go to the next step.
5	**VERIFY AFTER REPAIR PROCEDURE** • Perform "AFTER REPAIR PROCEDURE". (See 01–02C–7 AFTER REPAIR PROCEDURE [AJ].) • Are any DTCs present?	Yes	Go to the applicable DTC inspection. (See 01–02C–13 DTC TABLE [AJ].)
		No	Troubleshooting completed.

DTC P2502 [AJ]

E6U010200000WB5

DTC P2502	Generator terminal B circuit open
DETECTION CONDITION	• The PCM determines that the generator output voltage is **17 V or above**, or the battery voltage is **11 V or below** when the engine is running. **Diagnostic support note** • This is a continuous monitor (Other). • The MIL does not illuminate. • PENDING CODE is available if the PCM detects the above malfunction condition. • FREEZE FRAME DATA is not available. • DTC is stored in PCM memory.
POSSIBLE CAUSE	• Open circuit between generator terminal B and the battery positive terminal • Battery malfunction • PCM malfunction

Diagnostic procedure

STEP	INSPECTION		ACTION
1	**VERIFY FREEZE FRAME DATA HAS BEEN RECORDED** • Has FREEZE FRAME DATA been recorded?	Yes	Go to the next step.
		No	Record FREEZE FRAME PID DATA on repair order, then go to the next step.
2	**VERIFY RELATED REPAIR INFORMATION AVAILABILITY** • Check for related Service Bulletins and/or on-line repair information availability. • Is any related repair information available?	Yes	Perform repair or diagnosis according to the available repair information. • If the vehicle is not repaired, go to the next step.
		No	Go to the next step.
3	**INSPECT BATTERY** • Turn the ignition switch off. • Inspect battery. (See 01–17A–2 BATTERY INSPECTION [L3, AJ].) • Is there any malfunction?	Yes	Replace battery, then go to Step 7. (See 01–17A–1 BATTERY REMOVAL/INSTALLATION [L3, AJ].)
		No	Go to the next step.
4	**INSPECT GENERATOR TERMINAL FOR POOR INSTALLATION** • Turn the ignition switch off. • Check for looseness of generator terminal B installation nut. • Is nut loose?	Yes	Tighten generator terminal B installation nut, then go to Step 7.
		No	Go to the next step.
5	**INSPECT BATTERY POSITIVE TERMINAL FOR POOR INSTALLATION** • Turn the ignition switch off. • Check for looseness of battery positive terminal. • Is terminal loose?	Yes	Connect battery positive terminal correctly, then go to Step 7.
		No	Go to the next step.
6	**INSPECT BATTERY CHARGING CIRCUIT** • Start engine. • Disconnect battery positive terminal. • Does engine stall?	Yes	Repair or replace harness between generator terminal B and battery positive terminal, then go to the next step.
		No	Go to the next step.
7	**VERIFY TROUBLESHOOTING OF DTC P2502 COMPLETED** • Make sure to reconnect all disconnected connectors. • Clear DTC from PCM memory using WDS or equivalent. • Perform the KOER SELF TEST using the WDS or equivalent. (See 01–02C–8 KOEO/KOER SELF TEST [AJ].) • Is the PENDING CODE same DTC present?	Yes	Replace PCM, then go to the next step. (See 01–40C–5 PCM REMOVAL/INSTALLATION [AJ].)
		No	Go to the next step.
8	**VERIFY AFTER REPAIR PROCEDURE** • Perform "AFTER REPAIR PROCEDURE". (See 01–02C–7 AFTER REPAIR PROCEDURE [AJ].) • Are any DTCs present?	Yes	Go to the applicable DTC inspection. (See 01–02C–13 DTC TABLE [AJ].)
		No	Troubleshooting completed.

DTC P2503 [AJ]

E6U010200000WB6

DTC P2503	Generator output voltage signal no electricity
DETECTION CONDITION	• The PCM needs **20 A or more** from the generator, and determines the generator output voltage to be **8.5 V or below** when the engine is running. **Diagnostic support note** • This is a continuous monitor (Other). • The MIL does not illuminate. • PENDING CODE is available if the PCM detects the above malfunction condition. • FREEZE FRAME DATA is not available. • DTC is stored in PCM memory.
POSSIBLE CAUSE	• Generator malfunction — Rectifier circuit malfunction — Brush abrasion • Connector or terminal malfunction • Open or short to ground circuit between generator terminal D and PCM terminal 2AP • Open or short to ground circuit between generator terminal P and PCM terminal 2AU • Cut drive belt off or came drive belt off • PCM malfunction

DTC P2503	Generator output voltage signal no electricity

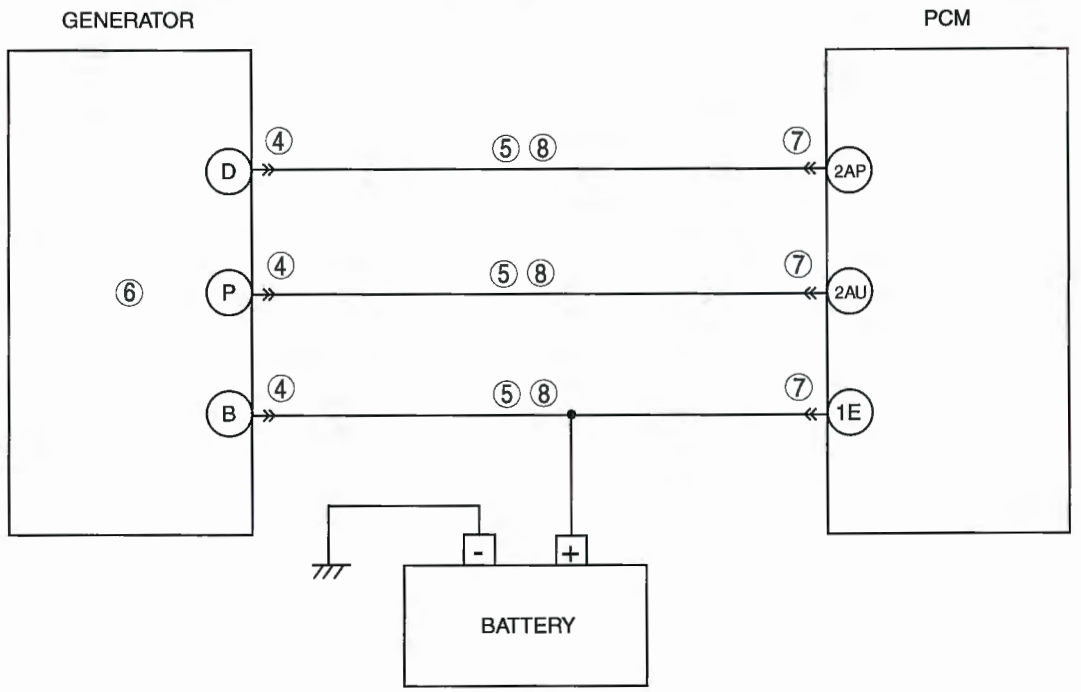

GENERATOR
HARNESS SIDE CONNECTOR



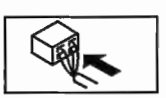

PCM
WIRING HARNESS-SIDE CONNECTOR

2BE	2BA	2AW	2AS	2AO	2AK	2AG	2AC	2Y	2U	2Q	2M	2I	2E	2A
2BF	2BB	2AX	2AT	2AP	2AL	2AH	2AD	2Z	2V	2R	2N	2J	2F	2B
2BG	2BC	2AY	2AU	2AQ	2AM	2AI	2AE	2AA	2W	2S	2O	2K	2G	2C
2BH	2BD	2AZ	2AV	2AR	2AN	2AJ	2AF	2AB	2X	2T	2P	2L	2H	2D

1BE	1BA	1AW	1AS	1AO	1AK	1AG	1AC	1Y	1U	1Q	1M	1I	1E	1A
1BF	1BB	1AX	1AT	1AP	1AL	1AH	1AD	1Z	1V	1R	1N	1J	1F	1B
1BG	1BC	1AY	1AU	1AQ	1AM	1AI	1AE	1AA	1W	1S	1O	1K	1G	1C
1BH	1BD	1AZ	1AV	1AR	1AN	1AJ	1AF	1AB	1X	1T	1P	1L	1H	1D

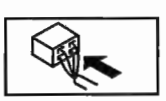

Diagnostic procedure

STEP	INSPECTION		ACTION
1	**VERIFY FREEZE FRAME DATA HAS BEEN RECORDED** • Has FREEZE FRAME DATA been recorded?	Yes	Go to the next step.
		No	Record FREEZE FRAME DATA on repair order, then go to the next step.
2	**VERIFY RELATED REPAIR INFORMATION AVAILABILITY** • Check for related Service Bulletins and/or on-line repair information availability. • Is any related repair information available?	Yes	Perform repair or diagnosis according to the available repair information. • If the vehicle is not repaired, go to the next step.
		No	Go to the next step.
3	**INSPECT DRIVE BELT CONDITION** • Verify that drive belt auto tensioner indicator mark in not exceeding limit. (See 01–10C–3 DRIVE BELT INSPECTION [AJ].) • Is front drive belt normal?	Yes	Go to the next step.
		No	Replace or adjust drive belt, then go to Step 9.
4	**INSPECT GENERATOR CONNECTOR FOR POOR CONNECTION** • Turn the ignition switch off. • Disconnect generator connector. • Check for poor connection (damaged, pulled-out pins, corrosion, etc.). • Is there any malfunction?	Yes	Repair or replace the terminal, then go to Step 9.
		No	Go to the next step.
5	**INSPECT GENERATOR CIRCUIT FOR SHORT TO GROUND** • Turn the ignition switch off. • Check continuity between the following circuits: — Generator terminal D and body ground — Generator terminal P and body ground • Is there continuity?	Yes	Repair or replace harness for short to ground, then go to Step 9.
		No	Go to the next step.
6	**INSPECT GENERATOR** • Inspect generator. (See 01–17A–5 GENERATOR INSPECTION [L3, AJ].) • Is there any malfunction?	Yes	Replace generator, then go to Step 9. (See 01–17A–4 GENERATOR REMOVAL/INSTALLATION [L3, AJ].)
		No	Go to the next step.
7	**INSPECT PCM CONNECTOR FOR POOR CONNECTION** • Turn the ignition switch off. • Disconnect PCM connector. • Check for poor connection (such as damaged, pulled-out pins, and corrosion). • Is there any malfunction?	Yes	Repair or replace the terminal, then go to Step 9.
		No	Go to the next step.
8	**INSPECT GENERATOR CIRCUIT FOR OPEN CIRCUIT** • Turn the ignition switch off. • Check continuity between the following circuits: — Generator terminal D and PCM terminal 2AP — Generator terminal P and PCM terminal 2AU • Is there continuity?	Yes	Go to the next step.
		No	Repair or replace harness for open circuit, then go to the next step.
9	**VERIFY TROUBLESHOOTING OF DTC P2503 COMPLETED** • Make sure to reconnect all disconnected connectors. • Clear DTC from PCM memory using WDS or equivalent. • Perform the KOER SELF TEST using the WDS or equivalent. (See 01–02C–8 KOEO/KOER SELF TEST [AJ].) • Is the PENDING CODE same DTC present?	Yes	Replace PCM, then go to the next step. (See 01–40C–5 PCM REMOVAL/INSTALLATION [AJ].)
		No	Go to the next step.

STEP	INSPECTION		ACTION
10	**VERIFY AFTER REPAIR PROCEDURE** • Perform "AFTER REPAIR PROCEDURE". (See 01–02C–7 AFTER REPAIR PROCEDURE [AJ].) • Are any DTCs present?	Yes	Go to the applicable DTC inspection. (See 01–02C–13 DTC TABLE [AJ].)
		No	Troubleshooting completed.

DTC P2504 [AJ]

E6U010200000WB7

DTC P2504	Battery overcharge
DETECTION CONDITION	• The PCM determines that the generator output voltage is **18.5 V or above**, or the battery voltage is **16.0 V or above** when the engine is running. **Diagnostic support note** • This is a continuous monitor (Other). • The MIL does not illuminate. • PENDING CODE is available if the PCM detects the above malfunction condition. • FREEZE FRAME DATA is not available. • DTC is stored in PCM memory.
POSSIBLE CAUSE	• Generator malfunction • Connector or terminal malfunction • Short to power circuit between generator connector terminal D and PCM terminal 2AP • PCM malfunction

DTC P2504	Battery overcharge

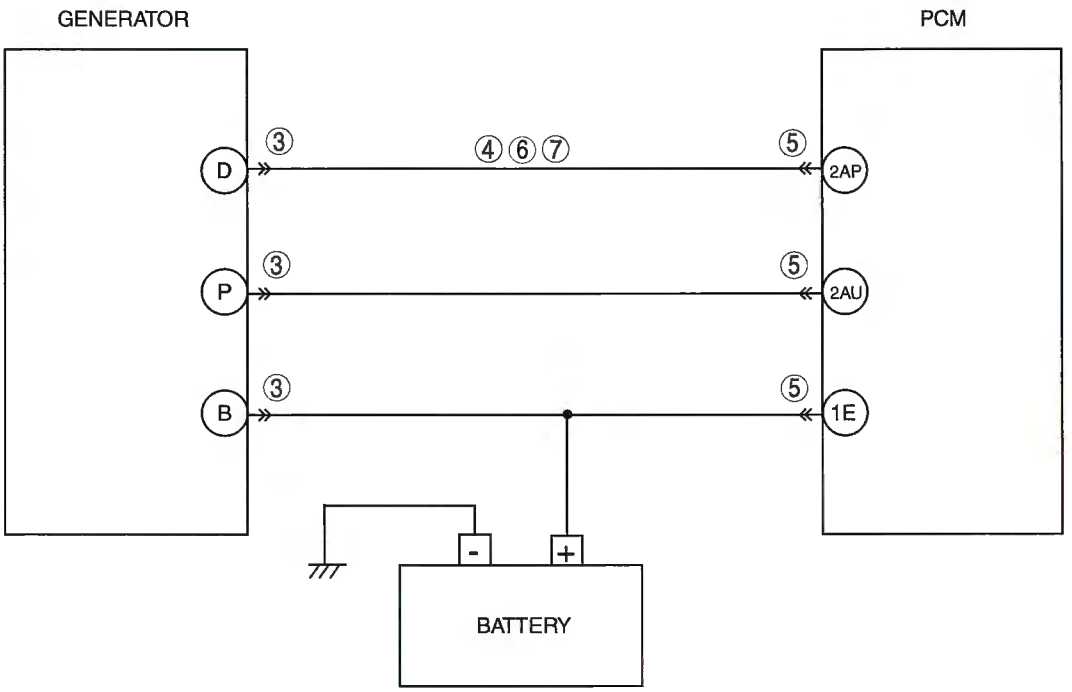

GENERATOR
HARNESS SIDE CONNECTOR

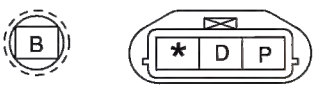



PCM
WIRING HARNESS-SIDE CONNECTOR

2BE	2BA	2AW	2AS	2AO	2AK	2AG	2AC	2Y	2U	2Q	2M	2I	2E	2A
2BF	2BB	2AX	2AT	2AP	2AL	2AH	2AD	2Z	2V	2R	2N	2J	2F	2B
2BG	2BC	2AY	2AU	2AQ	2AM	2AI	2AE	2AA	2W	2S	2O	2K	2G	2C
2BH	2BD	2AZ	2AV	2AR	2AN	2AJ	2AF	2AB	2X	2T	2P	2L	2H	2D

1BE	1BA	1AW	1AS	1AO	1AK	1AG	1AC	1Y	1U	1Q	1M	1I	1E	1A
1BF	1BB	1AX	1AT	1AP	1AL	1AH	1AD	1Z	1V	1R	1N	1J	1F	1B
1BG	1BC	1AY	1AU	1AQ	1AM	1AI	1AE	1AA	1W	1S	1O	1K	1G	1C
1BH	1BD	1AZ	1AV	1AR	1AN	1AJ	1AF	1AB	1X	1T	1P	1L	1H	1D

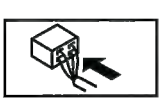

Diagnostic procedure

STEP	INSPECTION		ACTION
1	**VERIFY FREEZE FRAME DATA HAS BEEN RECORDED** • Has FREEZE FRAME DATA been recorded?	Yes	Go to the next step.
		No	Record FREEZE FRAME DATA on repair order, then go to the next step.
2	**VERIFY RELATED REPAIR INFORMATION AVAILABILITY** • Check for related Service Bulletins and/or on-line repair information availability. • Is any related repair information available?	Yes	Perform repair or diagnosis according to the available repair information. • If the vehicle is not repaired, go to the next step.
		No	Go to the next step.
3	**INSPECT GENERATOR CONNECTOR FOR POOR CONNECTION** • Turn the ignition switch off. • Disconnect generator connector. • Check for poor connection (such as damaged, pulled-out pins, and corrosion). • Is there any malfunction?	Yes	Repair or replace the terminal, then go to Step 8.
		No	Go to the next step.
4	**CLASSIFY GENERATOR MALFUNCTION OR OTHER MALFUNCTION** • Turn the ignition switch to the ON position. • Measure voltage between generator terminal D and body ground. • Is voltage **B+**?	Yes	Go to the next step.
		No	Malfunction at the generator. Go to step 7.
5	**INSPECT PCM CONNECTOR FOR POOR CONNECTION** • Turn the ignition switch off. • Disconnect PCM connector. • Check for poor connection (such as damaged, pulled-out pins, and corrosion). • Is there any malfunction?	Yes	Repair or replace the terminal, then go to Step 8.
		No	Go to the next step.
6	**INSPECT GENERATOR CONTROL CIRCUIT FOR SHORT TO POWER** • Turn the ignition switch to the ON position. • Measure voltage between generator terminal D and body ground. • Is voltage **B+**?	Yes	Repair or replace harness for short to power, then go to Step 8.
		No	Go to step 8.
7	**INSPECT GENERATOR CONTROL TERMINAL FOR SHORT TO POWER** • Turn the ignition switch to the ON position. • Measure voltage between generator terminal D and body ground. • Is voltage **B+**?	Yes	Replace generator, then go to the next step. (See 01–17A–4 GENERATOR REMOVAL/INSTALLATION [L3, AJ].)
		No	Go to the next step.
8	**VERIFY TROUBLESHOOTING OF DTC P2504 COMPLETED** • Make sure to reconnect all disconnected connectors. • Clear DTC from PCM memory using WDS or equivalent. • Perform the KOER SELF TEST using the WDS or equivalent. (See 01–02C–8 KOEO/KOER SELF TEST [AJ].) • Is the PENDING CODE same DTC present?	Yes	Replace PCM, then go to the next step. (See 01–40C–5 PCM REMOVAL/INSTALLATION [AJ].)
		No	Go to the next step.
9	**VERIFY AFTER REPAIR PROCEDURE** • Perform "AFTER REPAIR PROCEDURE". (See 01–02C–7 AFTER REPAIR PROCEDURE [AJ].) • Are any DTCs present?	Yes	Go to the applicable DTC inspection. (See 01–02C–13 DTC TABLE [AJ].)
		No	Troubleshooting completed.

DTC P2507 [AJ]

E6U010200000WB8

DTC P2507	PCM B+ voltage low
DETECTION CONDITION	• The PCM monitors the voltage of back-up battery positive terminal at PCM terminal 1E. If the PCM detected battery positive terminal voltage **below 2.5 V** for **2 s**, the PCM determines that the backup voltage circuit has malfunction. **Diagnostic support note** • This is a continuous monitor (CCM). • MIL illuminates if the PCM detects the above malfunction condition during the first drive cycle. • FREEZE FRAME DATA is available. • DTC is stored in PCM memory.
POSSIBLE CAUSE	• Melt down EEC fuse • Open circuit in wiring between EEC fuse and PCM terminal 1E • Short to ground between EEC fuse and PCM terminal 1E • Poor connection of PCM connector • PCM malfunction

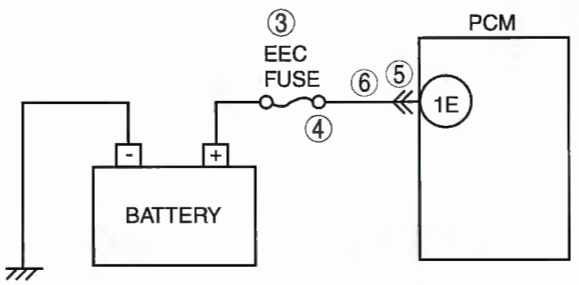

PCM
WIRING HARNESS-SIDE CONNECTOR

1BE	1BA	1AW	1AS	1AO	1AK	1AG	1AC	1Y	1U	1Q	1M	1I	1E	1A
1BF	1BB	1AX	1AT	1AP	1AL	1AH	1AD	1Z	1V	1R	1N	1J	1F	1B
1BG	1BC	1AY	1AU	1AQ	1AM	1AI	1AE	1AA	1W	1S	1O	1K	1G	1C
1BH	1BD	1AZ	1AV	1AR	1AN	1AJ	1AF	1AB	1X	1T	1P	1L	1H	1D

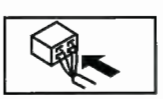

Diagnostic procedure

STEP	INSPECTION		ACTION
1	**VERIFY FREEZE FRAME DATA HAS BEEN RECORDED** • Has FREEZE FRAME PID DATA been recorded?	Yes	Go to the next step.
		No	Record FREEZE FRAME PID DATA on repair order, then go to the next step.
2	**VERIFY RELATED REPAIR INFORMATION AVAILABILITY** • Check for related Service Bulletins and/or on-line repair information availability. • Is any related repair information available?	Yes	Perform repair or diagnosis according to the available repair information. • If the vehicle is not repaired, go to the next step.
		No	Go to the next step.
3	**INSPECT EEC FUSE** • Turn the ignition switch off. • Inspect EEC fuse for failure and proper. • Is it normal?	Yes	Go to step 6.
		No	• If EEC fuse has been melt down, then go to the next step. • If EEC fuse is not installed correctly, install it correctly then go to Step 7.
4	**INSPECT MONITOR CIRCUIT FOR SHORT TO GROUND** • Disconnect battery cables. • Inspect for continuity between EEC fuse terminal and body ground. • Is there continuity?	Yes	Repair or replace the wiring harness for short to ground and install new fuse, then go to Step 7.
		No	Go to step 7.
5	**INSPECT PCM CONNECTOR FOR POOR CONNECTION** • Disconnect PCM connector. • Inspect for poor connection (such as damaged/ pulled-out pins, corrosion). • Is there any malfunction?	Yes	Repair terminals, then go to Step 7.
		No	Go to the next step.
6	**INSPECT MONITOR CIRCUIT FOR OPEN CIRCUIT** • Disconnect battery cables. • Inspect for continuity between EEC fuse terminal and PCM terminal 1E. • Is there continuity?	Yes	Go to the next step.
		No	Repair or replace the wiring harness for open circuit, then go to the next step.
7	**VERIFY TROUBLESHOOTING OF DTC P2507 COMPLETED** • Make sure to reconnect all disconnected connectors. • Clear DTC from PCM memory using WDS or equivalent. • Perform the KOEO or KOER SELF TEST using the WDS or equivalent. (See 01–02C–8 KOEO/KOER SELF TEST [AJ].) • Is the PENDING CODE same DTC present?	Yes	Replace the PCM, then go to the next step. (See 01–40C–5 PCM REMOVAL/INSTALLATION [AJ].)
		No	Go to the next step.
8	**VERIFY AFTER REPAIR PROCEDURE** • Perform "AFTER REPAIR PROCEDURE". (See 01–02C–7 AFTER REPAIR PROCEDURE [AJ].) • Is any DTC present?	Yes	Go to the applicable DTC inspection. (See 01–02C–13 DTC TABLE [AJ].)
		No	Troubleshooting completed.

DTC P2610 [AJ]

E6U010200000WD0

DTC P2610	PCM internal engine off timer performance
DETECTION CONDITION	• PCM internal engine off timer is damaged. **Diagnostic support note** • This is a continuous monitor (CCM). • MIL illuminates if the PCM detects the above malfunction condition in two consecutive drive cycles or in one drive cycle while the DTC for the same malfunction has been stored in the PCM. • PENDING CODE is available if the PCM detects the above malfunction condition during the first drive cycle. • FREEZE FRAME DATA is available. • DTCs are stored in the PCM memory.
POSSIBLE CAUSE	• PCM internal engine off timer is damaged.

Diagnostic procedure

STEP	INSPECTION		ACTION
1	**VERIFY FREEZE FRAME DATA HAS BEEN RECORDED** • Has the FREEZE FRAME DATA been recorded?	Yes	Go to the next step.
		No	Record the FREEZE FRAME DATA on the repair order, then go to the next step.
2	**VERIFY RELATED REPAIR INFORMATION AVAILABILITY** • Verify related Service Bulletins and/or on-line repair information availability. • Is any related repair information available?	Yes	Perform the repair or diagnosis according to the available repair information. • If the vehicle is not repaired, go to the next step.
		No	Go to the next step.
3	**VERIFY TROUBLESHOOTING OF DTC P2610 COMPLETED** • Make sure to reconnect all disconnected connectors. • Clear the DTC from the PCM memory using the WDS or equivalent. • Run Drive Mode 1 and 3. (See 01–02C–8 OBD-II DRIVE MODE [AJ].) • Is the PENDING CODE same DTC present?	Yes	Replace the PCM, then go to the next step. (See 01–40C–5 PCM REMOVAL/INSTALLATION [AJ].)
		No	Go to the next step.
4	**VERIFY AFTER REPAIR PROCEDURE** • Perform the "AFTER REPAIR PROCEDURE". (See 01–02C–7 AFTER REPAIR PROCEDURE [AJ].) • Are any DTCs present?	Yes	Go to the applicable DTC troubleshooting. (See 01–02C–13 DTC TABLE [AJ].)
		No	DTC troubleshooting completed.

DTC P2676 [AJ]

E6U010200000WB9

DTC P2676	Variable air duct (VAD) control solenoid valve circuit low input
DETECTION CONDITION	• The PCM monitors the VAD solenoid valve control signal voltage. If the following conditions are met, the PCM determines that there is the VAD control circuit problem. — The PCM turns the VAD solenoid valve off, but the voltage of the VAD solenoid valve control signal remains low. **Diagnostic support note** • This is a continuous monitor (Other). • The MIL does not illuminate. • PENDING CODE is available if the PCM detects the above malfunction condition. • FREEZE FRAME DATA is not available. • DTC is stored in the PCM memory.
POSSIBLE CAUSE	• VAD solenoid valve malfunction • Open circuit in wiring between main relay and VAD solenoid valve terminal A • Open circuit in wiring between VAD solenoid valve terminal B and PCM terminal 1BB • Short to ground in wiring between VAD solenoid valve terminal B and PCM terminal 1BB • Connector or terminal malfunction • PCM malfunction

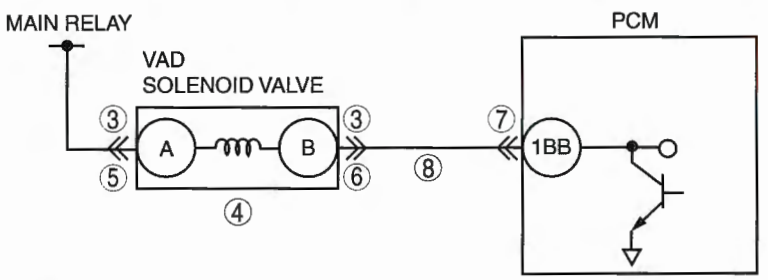

VAD SOLENOID VALVE
HARNESS SIDE CONNECTOR

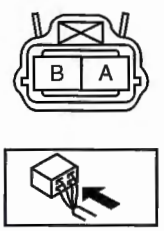

PCM
WIRING HARNESS-SIDE CONNECTOR

1BE	1BA	1AW	1AS	1AO	1AK	1AG	1AC	1Y	1U	1Q	1M	1I	1E	1A
1BF	1BB	1AX	1AT	1AP	1AL	1AH	1AD	1Z	1V	1R	1N	1J	1F	1B
1BG	1BC	1AY	1AU	1AQ	1AM	1AI	1AE	1AA	1W	1S	1O	1K	1G	1C
1BH	1BD	1AZ	1AV	1AR	1AN	1AJ	1AF	1AB	1X	1T	1P	1L	1H	1D

Diagnostic procedure

STEP	INSPECTION		ACTION
1	**VERIFY FREEZE FRAME DATA HAS BEEN RECORDED** • Has FREEZE FRAME DATA been recorded?	Yes	Go to the next step.
		No	Record FREEZE FRAME DATA on repair order, then go to the next step.
2	**VERIFY RELATED REPAIR INFORMATION AVAILABILITY** • Check for related Service Bulletins and/or on-line repair information availability. • Is any related repair information available?	Yes	Perform repair or diagnosis according to the available repair information. • If the vehicle is not repaired, go to the next step.
		No	Go to the next step.
3	**INSPECT VAD SOLENOID VALVE CONNECTOR FOR POOR CONNECTION** • Turn the ignition switch off. • Disconnect VAD solenoid valve connector. • Inspect for poor connection (such as damaged/pulled-out pins, corrosion). • Is there any malfunction?	Yes	Repair or replace the terminal, then go to Step 9.
		No	Go to the next step.
4	**INSPECT VAD SOLENOID VALVE MALFUNCTION** • Perform VAD solenoid valve inspection. (See 01–13C–5 VARIABLE AIR DUCT (VAD) CONTROL SOLENOID VALVE INSPECTION [AJ].) • Is VAD solenoid valve normal?	Yes	Go to the next step.
		No	Replace VAD solenoid valve, then go to step 9.
5	**INSPECT VAD SOLENOID VALVE POWER SUPPLY CIRCUIT FOR OPEN CIRCUIT** • Turn the ignition switch to the ON position (Engine off). • Measure voltage between VAD solenoid valve terminal A and body ground. • Is voltage **B+**?	Yes	Go to the next step.
		No	Repair or replace wiring harness for open circuit, then go to Step 9.
6	**INSPECT VAD SOLENOID VALVE CONTROL CIRCUIT FOR SHORT TO GROUND** • Inspect continuity between VAD solenoid valve terminal B and body ground. • Is there continuity?	Yes	Repair or replace wiring harness for short to ground, then go to Step 9.
		No	Go to the next step.
7	**INSPECT PCM CONNECTOR FOR POOR CONNECTION** • Disconnect the PCM connector. • Inspect for poor connection at terminal 1BB. (such as damaged/pulled-out pins, corrosion). • Is there any malfunction?	Yes	Repair terminal, then go to Step 9.
		No	Go to the next step.
8	**INSPECT VAD SOLENOID VALVE CONTROL CIRCUIT FOR OPEN CIRCUIT** • Inspect for continuity between VAD solenoid valve terminal B and PCM terminal 1BB. • Is there continuity?	Yes	Go to the next step.
		No	Repair or replace wiring harness for open circuit, then go to the next step.
9	**VERIFY TROUBLESHOOTING OF DTC P2676 COMPLETED** • Make sure to reconnect all disconnected connectors. • Clear DTC from PCM memory using WDS or equivalent. • Perform the KOEO or KOER SELF TEST using the WDS or equivalent. (See 01–02C–8 KOEO/KOER SELF TEST [AJ].) • Is the PENDING CODE same DTC present?	Yes	Replace the PCM, then go to the next step. (See 01–40C–5 PCM REMOVAL/INSTALLATION [AJ].)
		No	Go to the next step.
10	**VERIFY AFTER REPAIR PROCEDURE** • Perform the "After Repair Procedure". (See 01–02C–7 AFTER REPAIR PROCEDURE [AJ].) • Is any DTC present?	Yes	Go to the applicable DTC inspection. (See 01–02C–13 DTC TABLE [AJ].)
		No	Troubleshooting completed.

DTC P2677 [AJ]

E6U010200000WC0

DTC P2677	Variable air duct (VAD) solenoid valve circuit high input
DETECTION CONDITION	• The PCM monitors the VAD solenoid valve control signal current. If the following conditions are met, the PCM determines that there is the VAD control circuit problem. — The PCM turns the VAD solenoid valve on, but the current of the VAD solenoid valve control signal remains high. **Diagnostic support note** • This is a continuous monitor (Other). • The MIL does not illuminate. • PENDING CODE is available if the PCM detects the above malfunction condition. • FREEZE FRAME DATA is not available. • DTC is stored in the PCM memory.
POSSIBLE CAUSE	• VAD solenoid valve malfunction • Short to power supply between VAD solenoid valve terminal B and PCM terminal 1BB • Shorted VAD solenoid valve or PCM connector • PCM malfunction

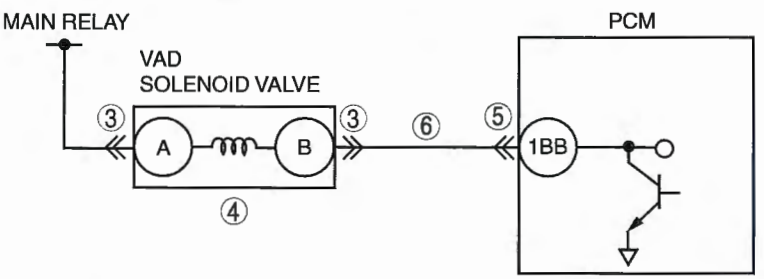

VAD SOLENOID VALVE
HARNESS SIDE CONNECTOR

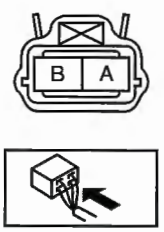

PCM
WIRING HARNESS-SIDE CONNECTOR

1BE	1BA	1AW	1AS	1AO	1AK	1AG	1AC	1Y	1U	1Q	1M	1I	1E	1A
1BF	1BB	1AX	1AT	1AP	1AL	1AH	1AD	1Z	1V	1R	1N	1J	1F	1B
1BG	1BC	1AY	1AU	1AQ	1AM	1AI	1AE	1AA	1W	1S	1O	1K	1G	1C
1BH	1BD	1AZ	1AV	1AR	1AN	1AJ	1AF	1AB	1X	1T	1P	1L	1H	1D

Diagnostic procedure

STEP	INSPECTION		ACTION
1	**VERIFY FREEZE FRAME DATA HAS BEEN RECORDED** • Has FREEZE FRAME DATA been recorded?	Yes	Go to the next step.
		No	Record FREEZE FRAME DATA on repair order, then go to the next step.
2	**VERIFY RELATED REPAIR INFORMATION AVAILABILITY** • Check for related Service Bulletins and/or on-line repair information availability. • Is any repair information available?	Yes	Perform repair or diagnosis according to the available repair information. • If the vehicle is not repaired, go to the next step.
		No	Go to the next step.
3	**INSPECT VAD SOLENOID VALVE CONNECTOR FOR POOR CONNECTION** • Turn the ignition switch off. • Disconnect VAD solenoid valve connector. • Inspect for poor connection (such as damaged/pulled-out pins, corrosion). • Is there any malfunction?	Yes	Repair or replace the terminal, then go to Step 7.
		No	Go to the next step.
4	**INSPECT VAD SOLENOID VALVE MALFUNCTION** • Perform VAD solenoid valve inspection. (See 01–13C–5 VARIABLE AIR DUCT (VAD) CONTROL SOLENOID VALVE INSPECTION [AJ].) • Is VIS solenoid valve normal?	Yes	Go to the next step.
		No	Replace VAD solenoid valve, then go to Step 7.
5	**INSPECT PCM CONNECTOR FOR POOR CONNECTION** • Turn the ignition switch off. • Disconnect the PCM connector. • Inspect for poor connection at terminal 1BB. (such as damaged/pulled-out pins, corrosion). • Is there any malfunction?	Yes	Repair terminal, then go to Step 7.
		No	Go to the next step.
6	**INSPECT VAD SOLENOID VALVE CONTROL CIRCUIT SHORT TO POWER SUPPLY** • Turn the ignition switch to the ON position (Engine off). • Measure voltage between VAD solenoid valve terminal B and body ground. • Is voltage **B+**?	Yes	Repair or replace wiring harness for open circuit, then go to the next step.
		No	Go to the next step.
7	**VERIFY TROUBLESHOOTING OF DTC P2677 COMPLETED** • Make sure to reconnect all disconnected connectors. • Clear DTC from PCM memory using WDS or equivalent. • Perform the KOEO or KOER SELF TEST using the WDS or equivalent. (See 01–02C–8 KOEO/KOER SELF TEST [AJ].) • Is the PENDING CODE same DTC present?	Yes	Replace the PCM, then go to the next step. (See 01–40C–5 PCM REMOVAL/INSTALLATION [AJ].)
		No	Go to the next step.
8	**VERIFY AFTER REPAIR PROCEDURE** • Perform the "After Repair Procedure". (See 01–02C–7 AFTER REPAIR PROCEDURE [AJ].) • Is any DTC present?	Yes	Go to the applicable DTC inspection. (See 01–02C–13 DTC TABLE [AJ].)
		No	Troubleshooting completed.

01–03A SYMPTOM TROUBLESHOOTING [ENGINE CONTROL SYSTEM (L3)]

MPTOM TROUBLESHOOTING
WIRING DIAGRAM [L3] 01–03A–2
California Emission Regulation
Applicable ATX Model 01–03A–2
Except for California Emission Regulation
Applicable ATX Model 01–03A–4
CONTROL SYSTEM DEVICE AND CONTROL RELATIONSHIP CHART [L3] 01–03A–6
FOREWORD [L3] 01–03A–7
INTERMITTENT CONCERN TROUBLESHOOTING [L3] 01–03A–7
Vibration Method 01–03A–7
Water Sprinkling Method 01–03A–9
ENGINE SYMPTOM TROUBLESHOOTING [L3] 01–03A–10
QUICK DIAGNOSTIC CHART [L3] 01–03A–11
NO.1 MELTING OF MAIN OR OTHER FUSES [L3] 01–03A–15
NO.2 MIL ILLUMINATES [L3] 01–03A–16
NO.3 WILL NOT CRANK [L3] 01–03A–17
NO.4 HARD TO START/LONG CRANK/ERRATIC START/ERRATICCRANK [L3] 01–03A–19
NO.5 ENGINE STALLS-AFTER START/AT IDLE [L3] 01–03A–21
NO.6 CRANKS NORMALLY BUT WILL ɔT START [L3] 01–03A–25
›.7 SLOW RETURN TO IDLE [L3] 01–03A–29
NO.8 ENGINE RUNS ROUGH/ROLLING IDLE [L3] 01–03A–30
NO.9 FAST IDLE/RUNS ON [L3] 01–03A–33
NO.10 LOW IDLE/STALLS DURING DECELERATION [L3] 01–03A–34
NO.11 ENGINE STALLS/QUITS, ENGINE RUNS ROUGH, MISSES, BUCK/JERK, HESITATION/STUMBLE, SURGES [L3] 01–03A–36
NO.12 LACK/LOSS OF POWER-ACCELERATION/CRUISE [L3] 01–03A–39
NO.13 KNOCKING/PINGING-ACCELERATION/CRUISE [L3] 01–03A–42
NO.14 POOR FUEL ECONOMY [L3] ... 01–03A–43
NO.15 EMISSION COMPLIANCE [L3] 01–03A–45
NO.16 HIGH OIL CONSUMPTION/LEAKAGE [L3] 01–03A–47
NO.17 COOLING SYSTEM CONCERNS-OVERHEATING [L3] 01–03A–47
NO.18 COOLING SYSTEM CONCERNS-RUNS COLD [L3] 01–03A–49
NO.19 EXHAUST SMOKE [L3] 01–03A–50
NO.20 FUEL ODOR (IN ENGINE COMPARTMENT) [L3] 01–03A–52
NO.21 ENGINE NOISE [L3] 01–03A–53
NO.22 VIBRATION CONCERNS (ENGINE) [L3] 01–03A–54
NO.23 A/C DOES NOT WORK SUFFICIENTLY [L3] 01–03A–54
NO.24 A/C IS ALWAYS ON OR A/C COMPRESSOR RUNS CONTINUOUSLY [L3] 01–03A–55
NO.25 A/C IS NOT CUT OFF UNDER WIDE OPEN THROTTLE CONDITIONS [L3] 01–03A–56
NO.26 EXHAUST SULPHUR SMELL [L3] 01–03A–57
NO.27 FUEL REFILL CONCERNS [L3] 01–03A–58
NO.28 FUEL FILLING SHUT OFF ISSUES [L3] 01–03A–59
NO.29 SPARK PLUG CONDITION [L3] 01–03A–60
ENGINE CONTROL SYSTEM OPERATION INSPECTION [L3] 01–03A–62
Input Signal System Investigation Procedure 01–03A–62
Main Relay Operation Inspection 01–03A–65
Intake Manifold Vacuum Inspection 01–03A–66
Electronic Throttle Control System Inspection 01–03A–66
Variable Intake Air System Operation Inspection 01–03A–67
Variable Tumble System Operation Inspection 01–03A–67
Fuel Injector Operation Inspection 01–03A–68
Fuel Cut Control System Inspection 01–03A–68
Fuel Pump Operation Inspection 01–03A–68
Fuel Pump Control System Inspection 01–03A–69
Spark Test 01–03A–69
EGR Control System Inspection 01–03A–70
Purge Control System Inspection 01–03A–70
A/C Cut-off Control System Inspection 01–03A–70
Cooling Fan Control System Inspection 01–03A–71
Variable Air Duct (VAD) Control System Operation Inspection 01–03A–72
Variable Valve Timing Control System Operation Inspection 01–03A–72
Evaporative Emission (EVAP) System Leak Inspection 01–03A–72

SYMPTOM TROUBLESHOOTING WIRING DIAGRAM [L3]

E6U010318881W72

California Emission Regulation Applicable ATX Model

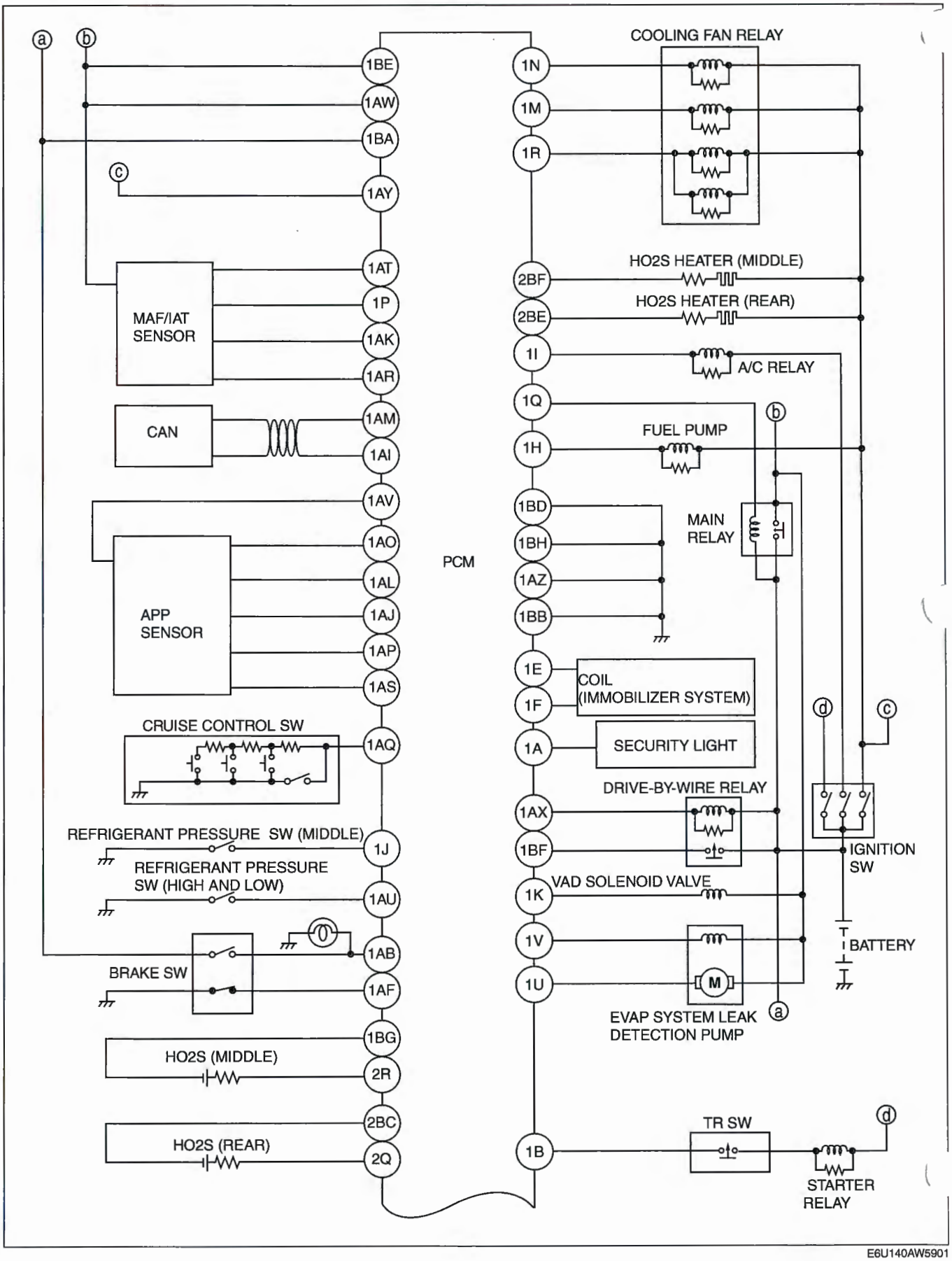

E6U140AW5901

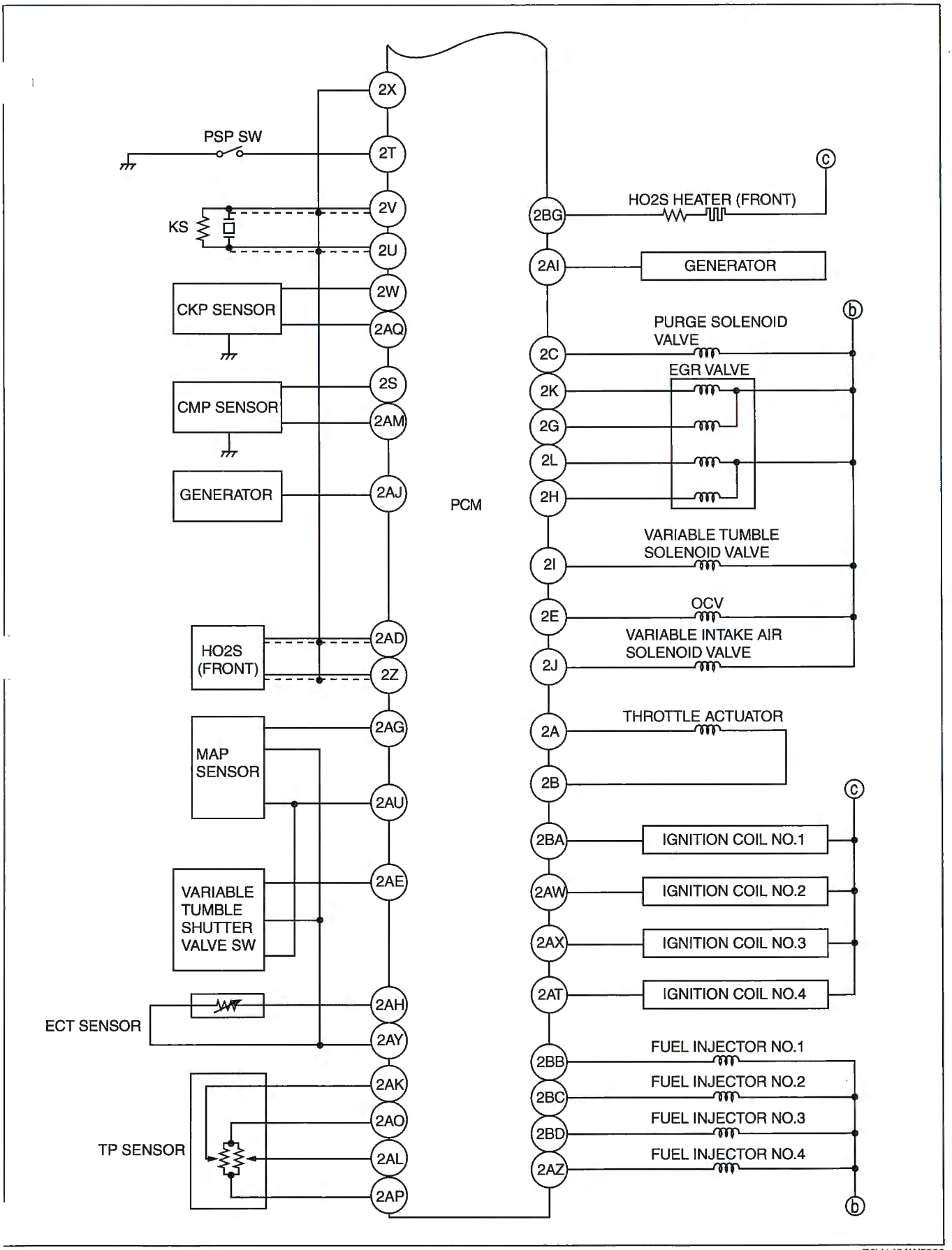

E6U140AW5902

Except for California Emission Regulation Applicable ATX Model

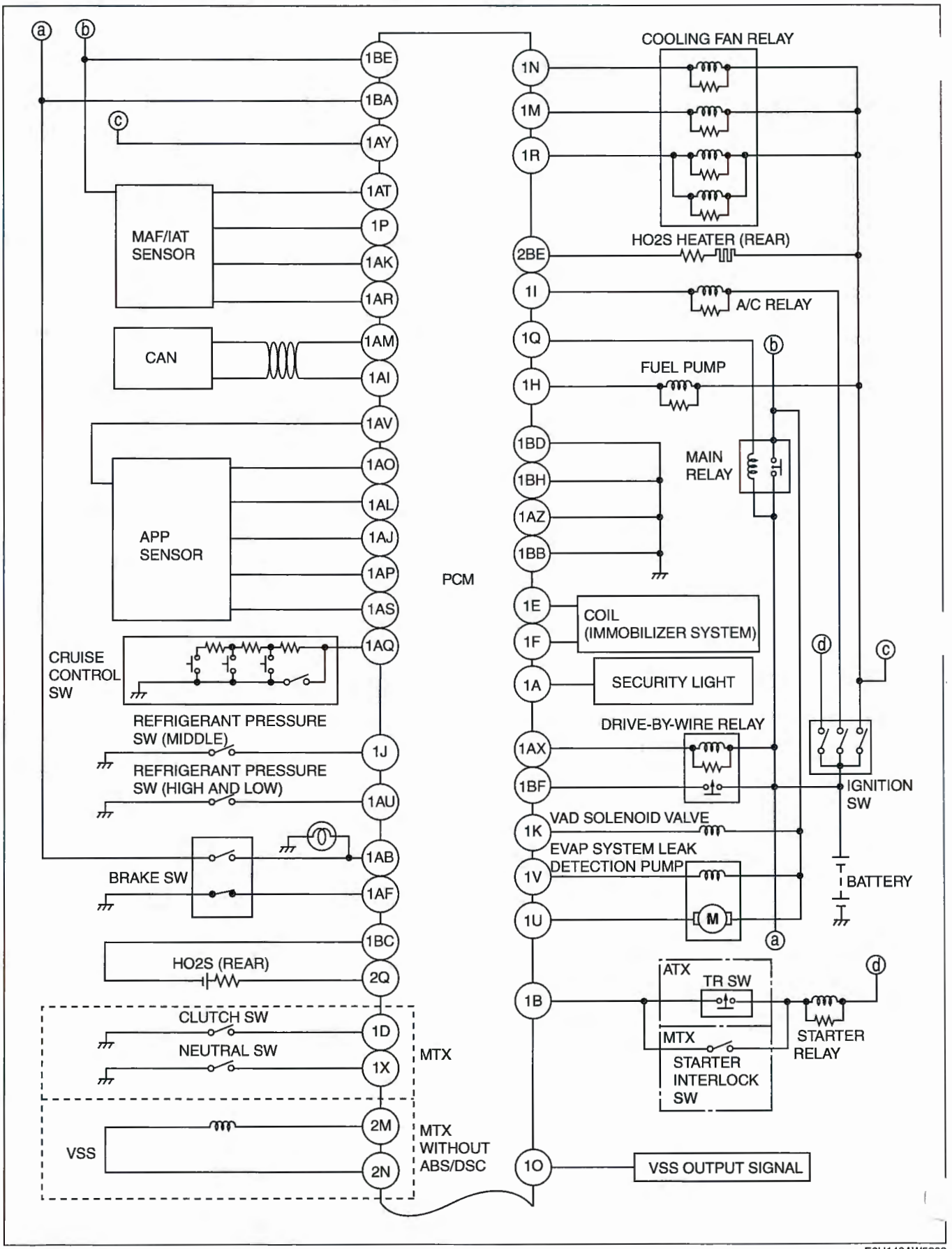

E6U140AW5903

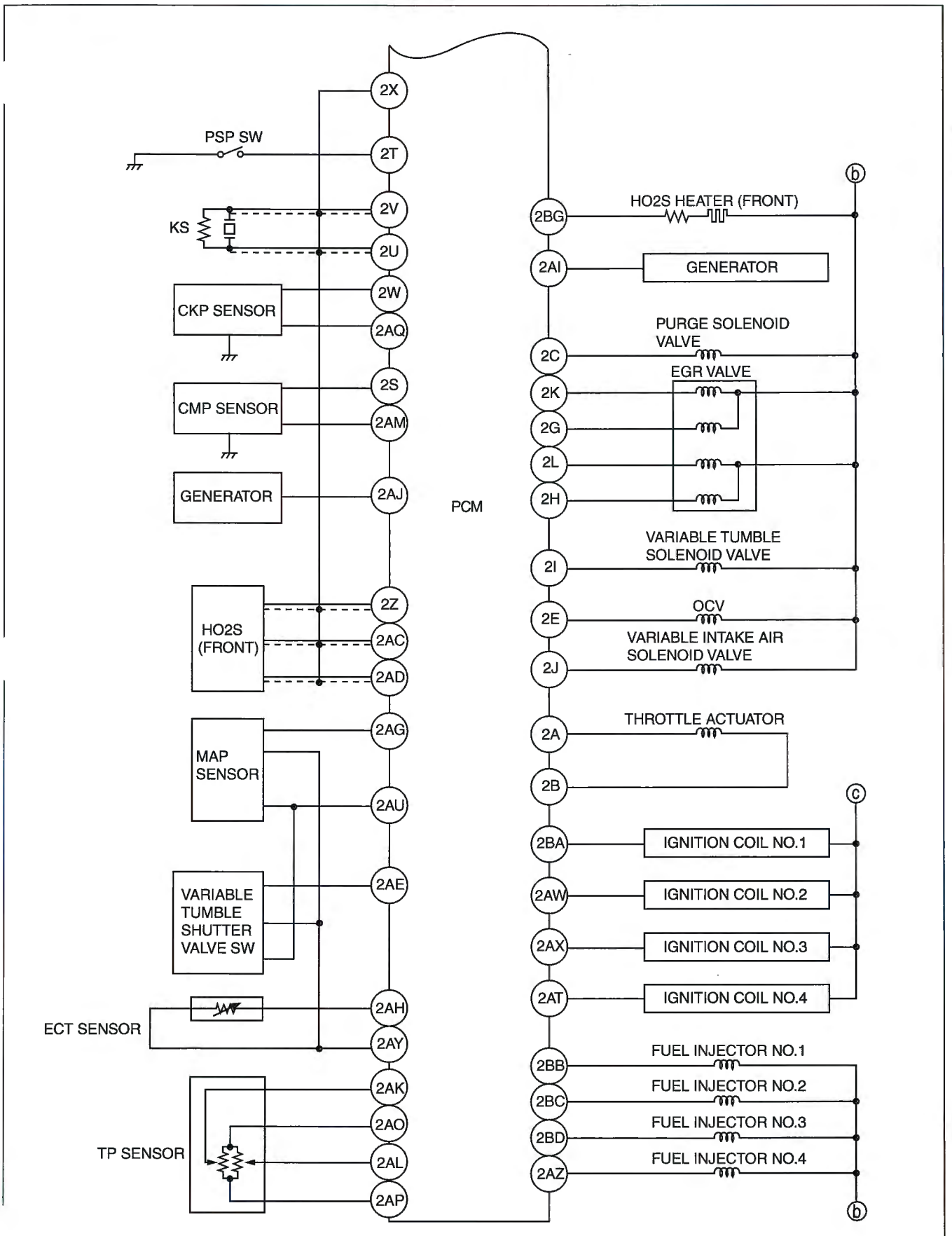

E6U140AW5904

CONTROL SYSTEM DEVICE AND CONTROL RELATIONSHIP CHART [L3]

E6U010318881W01

X: Applied

Component	Electronic throttle control system (Idle air control function)	Variable air duct (VAD) control	Throttle actuator control	Variable intake-air control	Variable tumble control	Variable valve timing (VVT) control	Fuel injection control	Fuel pump control	Electronic spark advance (ESA) control	Purge control	EGR control	HO2S heater control	A/C cut off control	Electrical fan control	Generator control	Immobilizer system	Cruise control
Input																	
IAT sensor	x						x		x	x	x	x			x		
MAF sensor	x					x	x		x	x	x	x					
TP sensor (No.1, No.2)	x	x	x		x	x	x		x		x	x	x				
APP sensor (No.1, No.2)			x										x				x
MAP sensor	x						x										
ECT sensor	x	x			x	x	x		x	x	x	x	x	x	x		
CMP sensor						x	x		x								
CKP sensor	x	x		x	x	x	x	x	x	x	x	x	x		x		
Knock sensor									x								
Front HO2S							x			x							
Middle HO2S*							x										
Rear HO2S							x										
BARO sensor							x			x			x				
Neutral switch	x						x		x	x			x				x
Clutch switch	x						x		x	x			x				x
TR switch	x						x		x	x			x				x
Brake switch (No.1, No.2)							x		x								x
PSP switch	x						x		x				x				
VSS	x						x		x		x				x		x
A/C switch, refrigerant pressure switch (high, low pressure)	x						x		x				x	x			
Refrigerant pressure switch (middle pressure)	x													x			
Battery voltage						x	x		x	x					x		
Generator terminal P	x						x		x						x		
ABS/TCS HU/CM							x		x								
Coil																x	
Cruise control switch																	x
Output																	
Throttle actuator	x		x														x
ET control relay			x														
VAD control solenoid valve		x															
Variable intake-air solenoid valve				x													
Variable tumble solenoid valve					x												
Oil control valve (OCV)						x											
Fuel injectors							x									x	
Fuel pump relay								x									
Ignition coil									x							x	
Purge solenoid valve										x							
EGR valve											x						
Front HO2S heater												x					
Middle HO2S heater*												x					
Rear HO2S heater												x					
A/C relay													x				
Cooling fan relay														x			
Generator (terminal D: field coil)															x		

*: California emission regulation applicable ATX model

E6U103AW5001

FOREWORD [L3]

E6U010318881W02

- When the customer reports a vehicle malfunction, check the malfunction indicator lamp (MIL) indication and diagnostic trouble code (DTC), then diagnose the malfunction according to the following flowchart:
  - — If a DTC exists, diagnose the applicable DTC inspection. (See 01–02A–18 DTC TABLE [L3].)
  - — If no DTC exists and the MIL does not illuminate or flash, diagnose the applicable symptom troubleshooting. (See 01–03A–11 QUICK DIAGNOSTIC CHART [L3].)

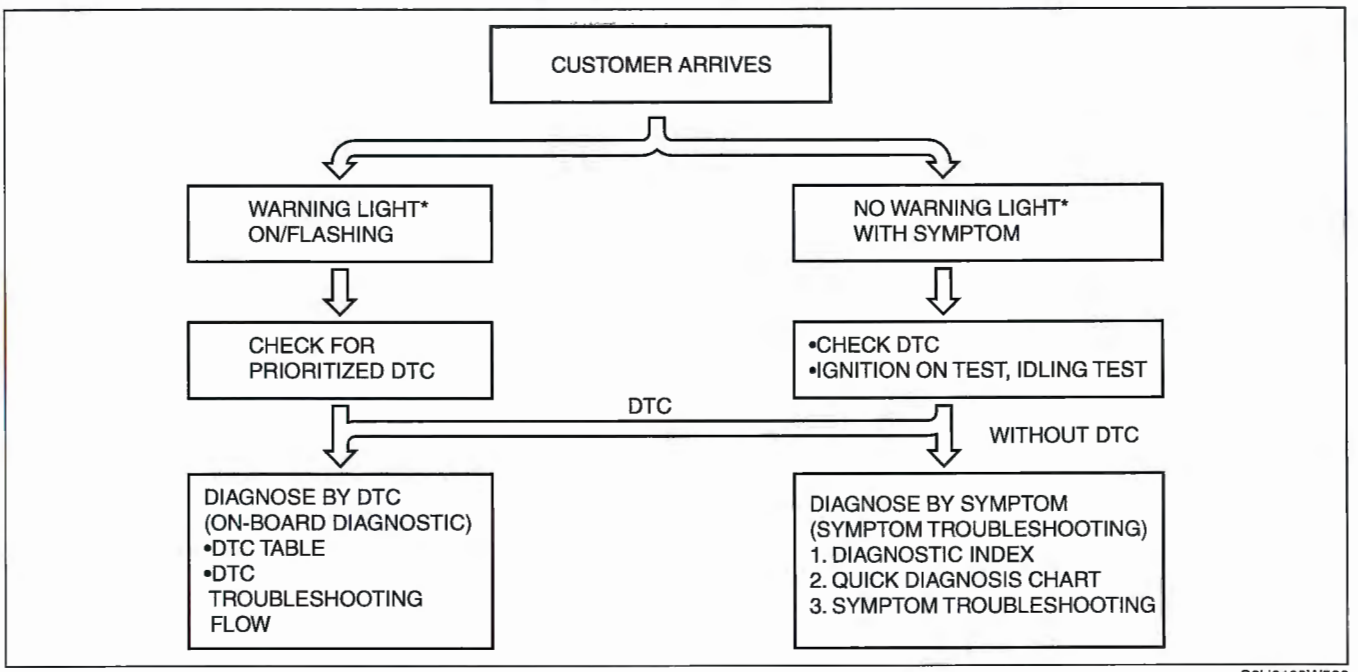

C6U0103W500

*: Malfunction Indicator Lamp (MIL), Generator Warning Light, Security Light

INTERMITTENT CONCERN TROUBLESHOOTING [L3]

E6U010318881W03

Vibration Method

- If malfunction occurs or becomes worse while driving on a rough road or when engine is vibrating, perform the steps below.

Note

- There are several reasons vehicle or engine vibration could cause an electrical malfunction. Check the following:
  - — Connectors not fully seated.
  - — Wiring harnesses not having full play.
  - — Wires laying across brackets or moving parts.
  - — Wires routed too close to hot parts.
- An improperly routed, improperly clamped, or loose harness can cause wiring harness to become pinched between parts.
- The connector joints, points of vibration, and places where wiring harnesses pass through the firewall and body panels are the major areas to be checked.

Inspection Method for Switch Connectors or Wires

1. Connect WDS or equivalent to DLC-2.
2. Turn ignition switch to ON position (Engine off).

Note

- If engine starts and runs, perform the following steps during idle.

3. Access PIDs for the switch you are inspecting.
4. Turn switch on manually.

5. Slightly shake each connector or wiring harness vertically and horizontally while monitoring the PID.
   - If PID value is unstable, check for poor connection.

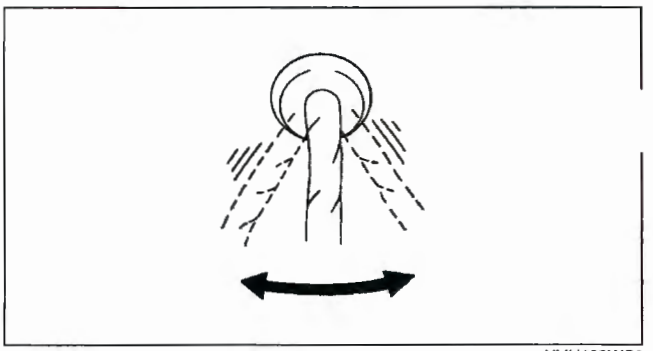
YMU103WC0

Inspection Method for Sensor Connectors or Wires

1. Connect WDS or equivalent to DLC-2.
2. Turn ignition switch to ON position (Engine off).

Note
- If engine starts and runs, perform the following steps during idle.

3. Access PIDs for the switch you are inspecting.
4. Slightly shake each connector or wiring harness vertically and horizontally while monitoring the PID.
   - If PID value is unstable, check for poor connection.

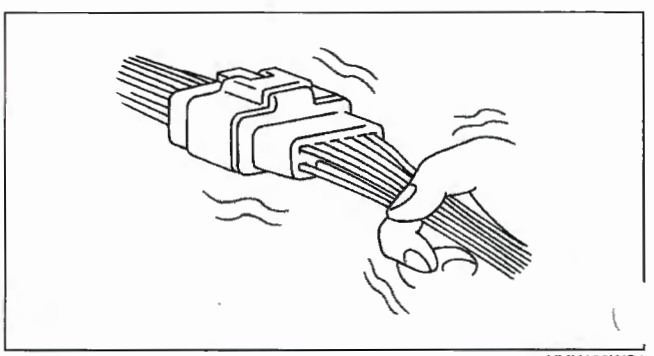
YMU103WC1

Inspection Method for Sensors

1. Connect WDS or equivalent to DLC-2.
2. Turn ignition switch to ON position (Engine off).

Note
- If engine starts and runs, perform the following steps during idle.

3. Access PIDs for the switch you are inspecting.
4. Vibrate the sensor slightly with your finger.
   - If PID value is unstable or malfunction occurs, check for poor connection or poorly mounted sensor or both.

Inspection Method for Actuators or Relays

1. Connect WDS or equivalent to DLC-2.
2. Turn ignition switch to ON position (Engine off).

Note
- If engine starts and runs, perform the following steps during idle.

3. Prepare the output state control function for actuators or relays that you are inspecting.
4. Vibrate the actuator or relay with your finger for 3 seconds after output state control function is activated.
   - If variable click sound is heard, check for poor connection or poorly mounted actuator or both, or the relay.

Note
- Vibrating relays too strongly may result in open relays.

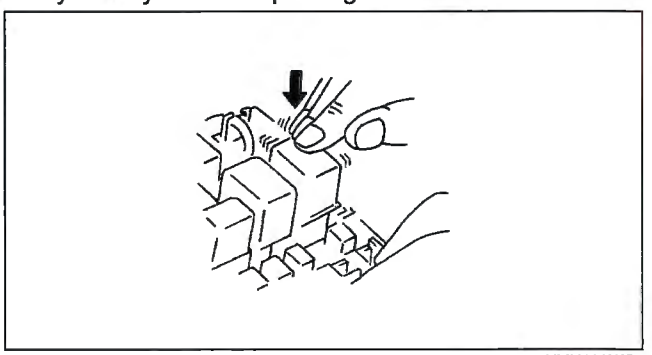

YMU103WC2

Water Sprinkling Method

If malfunction occurs only during high humidity or rainy/snowy weather, perform the following steps:

Caution
- **Indirectly change the temperature and humidity by spraying water onto the front of the radiator.**
- **If a vehicle is subject to water leakage, the leakage may damage the control module. When testing a vehicle with a water leakage problem, special caution must be used.**

1. Connect WDS or equivalent to DLC-2 if you are inspecting sensors or switches.
2. Turn ignition switch to ON position (Engine off).

Note
- If engine starts and runs, perform the following steps at idle.

3. Access PIDs for sensor or switch if you are inspecting sensors or switches.
4. If you are inspecting the switch, turn it on manually.
5. Spray water onto the vehicle or run it through a car wash.
   - If PID value is unstable or malfunction occurs, repair or replace part if necessary.

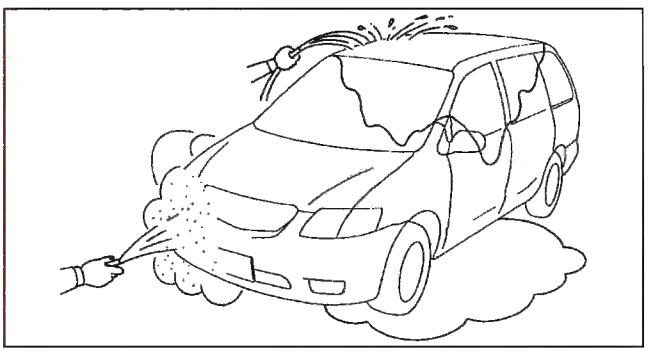

YMU103WC3

ENGINE SYMPTOM TROUBLESHOOTING [L3]

E6U010318881W04

- Confirm trouble symptom using the following diagnostic index, then go to appropriate troubleshooting chart.

Diagnostic Index

No.	TROUBLESHOOTING ITEM		DESCRIPTION
1	Melting of main or other fuses		—
2	MIL illuminates		MIL is illuminated.
3	Will not crank		Starter does not work.
4	Hard to start/long crank/erratic start/erratic crank		Starter cranks engine at normal speed but engine requires excessive cranking time before starting.
5	Engine stalls.	After start/at idle	Engine stops unexpectedly at idle or after start or both.
6	Cranks normally but will not start		Starter cranks engine at normal speed but engine will not run.
7	Slow return to idle		Engine takes more time than normal to return to idle speed.
8	Engine runs rough/rolling idle		Engine speed fluctuates between specified idle speed and lower speed and engine shakes excessively.
9	Fast idle/runs on		Engine speed continues at fast idle after warm-up. Engine runs after ignition switch is turned to OFF.
10	Low idle/stalls during deceleration		Engine stops unexpectedly at beginning of deceleration or recovery from deceleration.
11	Engine stalls/quits.	Acceleration/cruise	Engine stops unexpectedly at beginning of acceleration or during acceleration. Engine stops unexpectedly while cruising.
	Engine runs rough.	Acceleration/cruise	Engine speed fluctuates during acceleration or cruising.
	Misses	Acceleration/cruise	Engine misses during acceleration or cruising.
	Buck/jerk	Acceleration/cruise/ deceleration	Vehicle bucks/jerks during acceleration, cruising, or deceleration.
	Hesitation/stumble	Acceleration	Momentary pause at beginning of acceleration or during acceleration
	Surges	Acceleration/cruise	Momentary minor irregularity in engine output
12	Lack/loss of power	Acceleration/cruise	Performance is poor under load. (e.g., power down when climbing hills)
13	Knocking/pinging	Acceleration/cruise	Sound is produced when air/fuel mixture is ignited by something oth than spark plug. (e.g., hot spot in combustion chamber)
14	Poor fuel economy		Fuel economy is unsatisfactory.
15	Emission compliance		Fails emissions test.
16	High oil consumption/leakage		Oil consumption is excessive.
17	Cooling system concerns	Overheating	Engine runs at higher than normal temperature/overheats.
18	Cooling system concerns	Runs cold	Engine does not reach normal operating temperature.
19	Exhaust smoke		Blue, black, or white smoke from exhaust system
20	Fuel odor (in engine compartment)		Gasoline fuel smell or visible leakage
21	Engine noise		Engine noise from under hood
22	Vibration concerns (engine)		Vibration from under hood or driveline
23	A/C does not work sufficiently.		A/C compressor magnetic clutch does not engage when A/C is turned on.
24	A/C is always on or A/C compressor runs continuously.		A/C compressor magnetic clutch does not disengage.
25	A/C is not cut off under WOT conditions.		A/C compressor magnetic clutch does not disengage under WOT.
26	Exhaust sulphur smell		Rotten egg smell (sulphur) from exhaust
27	Fuel refill concerns		Fuel tank does not fill smoothly.
28	Fuel filling shut off issues		Fuel does not shut off properly.
29	Spark plug condition		Incorrect spark plug condition
30.	ATX concerns	Upshift/downshift engagement	ATX concerns not related to engine performance

QUICK DIAGNOSTIC CHART [L3]

E6U010318881W05

X: Applied

Troubleshooting item			Possible factor: Starter motor malfunction (Mechanical or electrical)	Starter circuit including ignition switch is open.	Starter interlock switch malfunction (MTX)	Improper engine oil level	Low or dead battery	Charging system malfunction	Improper engine compression	Improper valve timing	Hydrolocked engine	Improper engine oil viscosity	Improper dipstick	Base engine malfunction	Drive plate or flywheel are seized.	Improper tension or damaged drive belts	Improper engine coolant level	Water and anti-freeze mixture is improper.	Cooling system malfunction (Radiator, hoses, overflow system, thermostat, etc.)	Cooling fan system malfunction	Engine or transaxle mounts are improperly installed.	Cooling fan or condenser fan seat are improper.	Cruise control system operation improperly	Fuel quality
1	Melting of main or other fuses																							
2	MIL illuminates																							
3	Will not crank		x	x	x		x	x			x				x									
4	Hard to start/long crank/erratic start/erratic crank		x																					x
5	Engine stalls.	After start/at idle							x	x														x
6	Cranks normally but will not start								x	x														x
7	Slow return to idle																		x					
8	Engine runs rough/rolling idle								x	x														x
9	Fast idle/runs on																						x	
10	Low idle/stalls during deceleration																							
11	Engine stalls/quits.	Acceleration/cruise							x	x														x
	Engine runs rough.	Acceleration/cruise							x	x														x
	Misses	Acceleration/cruise							x	x														x
	Buck/jerk	Acceleration/cruise/ deceleration							x	x														x
	Hesitation/stumble	Acceleration							x	x														x
	Surges	Acceleration/cruise							x	x														x
12	Lack/loss of power	Acceleration/cruise							x	x														x
13	Knocking/pinging	Acceleration/cruise							x										x					
14	Poor fuel economy								x	x									x	x				x
15	Emission compliance								x	x				x					x					
16	High oil consumption/leakage											x	x	x										
17	Cooling system concerns	Overheating														x	x	x	x	x				
18	Cooling system concerns	Runs cold																	x	x				
19	Exhaust smoke								x					x					x					
20	Fuel odor (in engine compartment)																							
21	Engine noise					x								x		x								
22	Vibration concerns (engine)															x					x	x		
23	A/C does not work sufficiently.																							
24	A/C is always on or A/C compressor runs continuously.																							
25	A/C is not cut off under WOT conditions.																							
26	Exhaust sulphur smell																							x
27	Fuel refill concerns																							
28	Fuel filling shut off issues																							
29	Spark plug condition								x															
30	ATX concerns	Upshift/downshift engagement	See Section 05-03A, TROUBLESHOOTING																					

E6U103AW5002

X: Applied

	Possible factor / Troubleshooting item		Variable valve timing system malfunction	Variable tumble control malfunction	Engine overheating	Air cleaner element clogging or restriction	Air leakage from intake-air system (loose tubes, cracks, gaskets breakage)	Electronic throttle control impriper operation	Throttle body malfunction	Variable intake-air system malfunction	VAD malfunction	Vacuum leakage (Vacuum hose damage, misrouting)	Ignition coil malfunction (e.g. ppen, short or cracks)	Initial ignition timing misadjustment (CKP snnsor & crankshaft pulley misadjustment)	Spark plug malfunction	CKP sensor is dameged. (e.g.open or short circuit)	Crankshaft pulley is damaged	Improper gap between CKP sensor and crankshaft	Fuel pump malfunction (Mechanically or electrically)	Pressure regulator malfunction	Fuel hoses restriction or clogging
1	Melting of main or other fuses																				
2	MIL illuminates		x	x				x		x						x					
3	Will not crank																				
4	Hard to start/long crank/erratic start/erratic crank					x	x	x				x	x		x	x	x	x	x	x	x
5	Engine stalls.	After start/at idle	x		x	x	x	x				x	x	x	x	x	x	x	x	x	x
6	Cranks normally but will not start		x		x	x	x	x				x	x	x	x	x	x	x	x	x	x
7	Slow return to idle								x												
8	Engine runs rough/rolling idle		x		x	x	x	x				x	x	x	x	x	x	x	x	x	x
9	Fast idle/runs on						x	x	x												
10	Low idle/stalls during deceleration						x	x				x									
11	Engine stalls/quits.	Acceleration/cruise		x	x	x	x	x	x			x	x		x	x	x	x	x	x	x
	Engine runs rough.	Acceleration/cruise		x	x	x	x	x	x			x	x		x	x	x	x	x	x	x
	Misses	Acceleration/cruise		x	x	x	x	x	x			x	x		x	x	x	x	x	x	x
	Buck/jerk	Acceleration/cruise/deceleration		x	x	x	x	x	x			x	x x		x	x	x	x	x	x	x
	Hesitation/stumble	Acceleration		x	x	x	x	x	x			x			x	x	x	x	x	x	x
	Surges	Acceleration/cruise		x	x	x	x	x	x			x	x		x	x	x	x	x	x	x
12	Lack/loss of power	Acceleration/cruise	x	x	x	x	x	x	x	x		x	x		x	x	x	x	x	x	x
13	Knocking/pinging	Acceleration/cruise			x														x	x	
14	Poor fuel economy		x	x		x				x			x		x					x	
15	Emission compliance					x	x		x			x	x		x				x	x	x
16	High oil consumption/leakage																				
17	Cooling system concerns	Overheating																			
18	Cooling system concerns	Runs cold																			
19	Exhaust smoke					x							x		x				x	x	x
20	Fuel odor (in engine compartment)																			x	
21	Engine noise						x				x	x									
22	Vibration concerns (engine)																				
23	A/C does not work sufficiently.																				
24	A/C is always on or A/C compressor runs continuously.																				
25	A/C is not cut off under WOT conditions.																				
26	Exhaust sulphur smell											x							x	x	x
27	Fuel refill concerns																				
28	Fuel filling shut off issues																				
29	Spark plug condition					x							x		x				x	x	x
30	ATX concerns	Upshift/downshift engagement	See Section 05-03A, TROUBLESHOOTING																		

E6U103AW5003

X: Applied

	Possible factor / Troubleshooting item		Injectors malfunction (Leakage or clogging, inoperative)	Fuel leakage from fuel system (including insulator, injector O-ring)	Fuel filters restriction or clogging	CMP sensor is damaged. (e.g. open or short circuit)	Camshaft is damaged	Improper air/fuel mixture ratio control	Exhaust system restriction or clogging	Catalytic converter malfunction	EGR system malfunction	EVAP control system malfunction	PCV valve malfunction	Constant voltage supply circuit malfunction	Main relay malfunction (Mechanically or electrically)	ECT sensor malfunction	TR sensor misadjustment (ATX)	TR sensor malfunction (ATX)	Brake switch and related circuit malfunction	Manifold absolute pressure sensor and related circuit malfunction	HO2S and related circuit malfunction
1	Melting of main or other fuses																				
2	MIL illuminates					x		x								x	x		x	x	x
3	Will not crank																x	x			
4	Hard to start/long crank/erratic start/erratic crank				x	x	x	x	x		x	x	x								x
5	Engine stalls.	After start/at idle	x	x		x	x	x	x		x	x	x		x						x
6	Cranks normally but will not start		x	x				x	x		x	x	x	x	x						x
7	Slow return to idle															x					
8	Engine runs rough/rolling idle		x		x	x	x	x	x		x	x	x								x
9	Fast idle/runs on															x					
10	Low idle/stalls during deceleration							x				x						x	x		x
11	Engine stalls/quits.	Acceleration/cruise	x		x	x	x	x	x		x	x	x	x	x					x	x
	Engine runs rough.	Acceleration/cruise	x		x	x	x	x	x		x	x	x	x	x					x	x
	Misses	Acceleration/cruise	x		x	x	x	x	x		x	x	x	x	x					x	x
	Buck/jerk	Acceleration/cruise/deceleration	x		x	x	x	x	x		x	x	x	x	x					x	x
	Hesitation/stumble	Acceleration	x		x	x	x	x	x		x	x	x	x	x					x	x
	Surges	Acceleration/cruise	x		x	x	x	x	x		x	x	x	x	x					x	x
12	Lack/loss of power	Acceleration/cruise	x			x	x		x		x	x	x								
13	Knocking/pinging	Acceleration/cruise				x										x					
14	Poor fuel economy				x	x	x		x				x								
15	Emission compliance				x	x	x	x	x	x	x	x	x								x
16	High oil consumption/leakage												x								
17	Cooling system concerns	Overheating																			
18	Cooling system concerns	Runs cold																			
19	Exhaust smoke		x		x								x								
20	Fuel odor (in engine compartment)			x								x									
21	Engine noise																				
22	Vibration concerns (engine)																				
23	A/C does not work sufficiently.																				
24	A/C is always on or A/C compressor runs continuously.																				
25	A/C is not cut off under WOT conditions.																				
26	Exhaust sulphur smell				x							x									
27	Fuel refill concerns											x									
28	Fuel filling shut off issues											x									
29	Spark plug condition		x	x				x	x			x				x					x
30	ATX concerns	Upshift/downshift engagement	See Section 05-03A, TROUBLESHOOTING																		

E6U103AW5004

X: Applied

	Troubleshooting item / Possible factor		IAT sensor and related circuit malfunction	Barometric pressure sensor malfunction	Neutral or clutch switch and related circuit malfunction (MTX)	MAF sensor and related circuit malfunction	Knock sensor and related circuit malfunction	TP sensor and related circuit malfunction	Accelerator position sensor and related circuit malfunction	P/S pressure switch and related circuit malfunction	Improper refrigerant charging amount	A/C relay (A/C control signal circuit malfunction)	A/C compressor magnetic clutch malfunction	Condenser fan system malfunction	Improper load signal input	Clutch slippage (MTX)	ATX related parts malfunction (ATX)	VSS and related circuit malfunction	Improper ATF level (ATX)	Brake dragging	Loose parts	Improper balance of wheels and tires	Drive line malfunction	Suspension malfunction	Immobilizer system operation	Immobilizer system or related circuit malfunction
1	Melting of main or other fuses																									
2	MIL illuminates		x	x	x	x	x	x		x																
3	Will not crank																								x	x
4	Hard to start/long crank/erratic start/erratic crank					x																				
5	Engine stalls.	After start/at idle		x							x	x													x	x
6	Cranks normally but will not start																								x	x
7	Slow return to idle																									
8	Engine runs rough/rolling idle			x						x	x	x		x	x											
9	Fast idle/runs on														x											
10	Low idle/stalls during deceleration				x	x		x	x			x	x													
11	Engine stalls/quits	Acceleration/cruise		x		x		x	x		x	x				x	x	x								
	Engine runs rough	Acceleration/cruise		x		x		x	x		x	x				x	x	x								
	Misses	Acceleration/cruise				x		x	x		x	x				x	x	x								
	Buck/jerk	Acceleration/cruise/deceleration				x		x	x		x	x				x	x	x								
	Hesitation/stumble	Acceleration		x		x		x	x		x	x				x	x	x								
	Surges	Acceleration/cruise				x		x	x		x	x				x	x	x								
12	Lack/loss of power	Acceleration/cruise				x		x	x		x	x				x	x	x		x						
13	Knocking/pinging	Acceleration/cruise	x			x	x																			
14	Poor fuel economy					x										x			x	x						
15	Emission compliance																									
16	High oil consumption/leakage																									
17	Cooling system concerns	Overheating									x	x		x												
18	Cooling system concerns	Runs cold												x												
19	Exhaust smoke																									
20	Fuel odor (in engine compartment)																									
21	Engine noise																				x					
22	Vibration concerns (engine)																				x	x	x	x		
23	A/C does not work sufficiently										x	x	x													
24	A/C is always on or A/C compressor runs continuously											x	x													
25	A/C is not cut off under WOT conditions								x																	
26	Exhaust sulphur smell																									
27	Fuel refill concerns																									
28	Fuel filling shut off issues																									
29	Spark plug condition					x																				
30	ATX concerns	Upshift/downshift engagement	See Section 05-03A, TROUBLESHOOTING																							

E6U103AW5005

NO.1 MELTING OF MAIN OR OTHER FUSES [L3]

E6U010318881W06

1	MELTING OF MAIN OR OTHER FUSES

TROUBLESHOOTING HINTS]
Inspect condition of fuse.

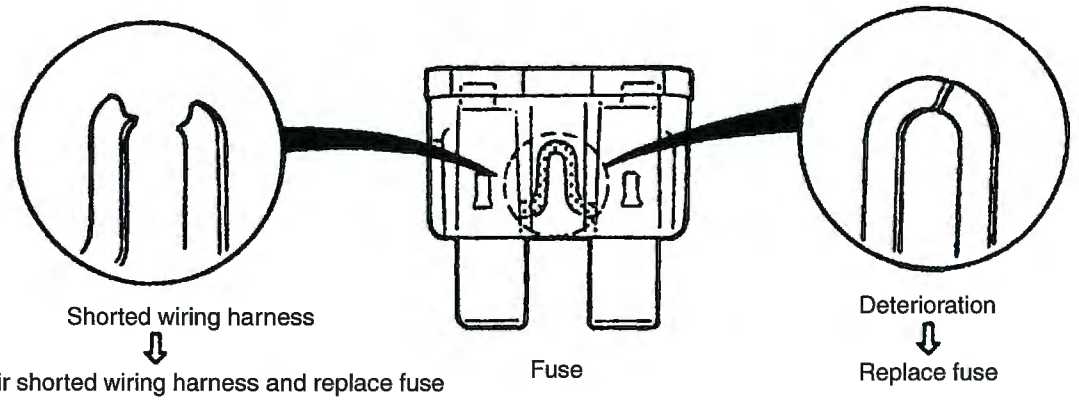

Damaged fuse	Related wiring harness
MAIN (100A)	**MAIN fuse** • IG KEY2 fuse • AD FAN fuse • FAN fuse • BTN fuse • Generator
ENG +B (10A)	**ENG +B fuse** • PCM
IG KEY1 (40A)	**IG KEY1 fuse** • Ignition switch — ENGINE IG fuse — METER IG fuse
IG KEY2 (30A)	**IG KEY2 fuse** • Ignition switch • Starter relay
ETC (7.5A)	**ETC fuse** • ETC relay — PCM
AD FAN (30A)	**AD FAN fuse** • Cooling fan relay No.1 — Cooling fan motor No.1 — Cooling fan motor No.2
FAN (30A)	**FAN fuse** • Cooling fan relay No.2 — Cooling fan motor No.1 • Cooling fan relay No.3 — Cooling fan motor No.2
ENGINE IG (15A)	**ENGINE IG fuse** • PCM • Ignition coil • Capacitor
METER IG (15A)	**METER IG fuse** • Cooling fan relay No.1 — PCM • Cooling fan relay No.2 — PCM • Cooling fan relay No.3 — PCM • Cooling fan relay No.4 — PCM • Heated oxygen sensor heater (front)*1 • Heated oxygen sensor heater (rear)*1

Damaged fuse	Related wiring harness
ENG BAR (10A)	**ENG BAR fuse** • EGR valve • Purge solenoid valve • MAF/IAT sensor • Variable air duct control solenoid valve • OCV • Variable intake air system control solenoid valve • Variable tumble solenoid valve • EVAP system leak detection pump
ENG BAR2 (15A)*2	**ENG BAR2 fuse** • Heated oxygen sensor heater (front) • Heated oxygen sensor heater (rear)
INJ (15A)	**INJ fuse** • PCM • Fuel pump relay — PCM — Check connector • Fuel injectors • ETC relay — PCM
FUEL PUMP (15A)	**FUEL PUMP fuse** • Main relay — PCM • Fuel pump relay — Fuel pump
BTN (40A)	**BTN fuse** • ROOM fuse
ROOM (15A)	**ROOM fuse** • DLC

*1 : California emission regulation applicable ATX model
*2 : Except for California emission regulation applicable ATX model

NO.2 MIL ILLUMINATES [L3]

E6U010318881W07

2	MIL ILLUMINATES
DESCRIPTION	MIL is illuminated.
POSSIBLE CAUSE	• PCM illuminates for emission-related concern (DTC is stored in PCM) • Instrument cluster malfunction **Note** • If MIL blinks at steady rate, misfire condition could possibly exist.

Diagnostic procedure

STEP	INSPECTION	RESULTS	ACTION
1	Connect WDS or equivalent to DLC-2. Turn ignition switch to ON position (Engine off). Retrieve any DTCs. Are there any DTCs displayed?	Yes	**DTC is displayed:** • Go to appropriate DTC test.
		No	**No DTC is displayed:** • Inspect for open or short circuit for between following PCM terminal and instrument cluster. — PCM terminal 1AI and instrument cluster terminal 2W — PCM terminal 1AM and instrument cluster terminal 2X • Inspect instrument cluster operation. See Section 09.
2	Verify test results. • If okay, return to diagnostic index to service any additional symptoms. • If malfunction remains, inspect related Service Bulletins and/or On-line Repair Information and perform repair or diagnosis. — If vehicle is repaired, troubleshooting completed. — If vehicle is not repaired or additional diagnostic information is not available, reprogram PCM if later calibration is available. Retest.		

NO.3 WILL NOT CRANK [L3]

E6U010318881W08

3	WILL NOT CRANK
DESCRIPTION	Starter does not work.
POSSIBLE CAUSE	• Open starter circuit between ignition switch and starter • TR switch malfunction (ATX) • TR switch misadjustment (ATX) • Low or dead battery. • Charging system malfunction. • Starter interlock switch malfunction (MTX). • Starter malfunction • Seized/hydrolocked engine, flywheel or drive plate • Immobilizer system (PATS) and/or circuit malfunction.

Diagnostic procedure

STEP	INSPECTION	RESULTS	ACTION
1	Connect WDS or equivalent to DLC-2. Do the following conditions appear? • Engine is not completely started. • DTC B1681 is displayed.	Yes	**Both conditions appear:** Go to Step 4.
		No	**Either or other condition appears:** Go to the next step.
2	Is coil connector securely connected to coil?	Yes	Go to the next step.
		No	Connect coil connector securely. Return to Step 1.
3	Does security light illuminate?	Yes	Go to the next step.
		No	Inspect instrument cluster and wiring harness.
4	Connect WDS or equivalent to DLC-2 and retrieve DTC. **DTC** **B1213, B1342, B1600, B1601, B1602, B1681, B2103, B2431**	Yes	Go to appropriate DTC test.
		No	Go to the next step.
5	Is there continuity between PCM GND terminals 1AZ, 1BB, 1BD, 1BH and GND?	Yes	Go to the next step.
		No	Repair or replace wiring harness.
6	Measure voltage between PCM GND terminals 1AZ, 1BB, 1BD, 1BH and coil terminal C. Is the voltage **below 1.0 V**?	Yes	Go to the next step.
		No	Repair or replace wiring harness.
7	Turn ignition switch to ON position. Access VPWR PID. Is VPWR PID normal? **Specification** **Battery voltage**	Yes	Go to the next step.
		No	Repair or replace wiring harness.
8	Disconnect coil connector. Turn ignition switch to ON position. Is there battery voltage at coil connector terminal D (harness-side)?	Yes	Go to the next step.
		No	Repair or replace wiring harness between coil connector terminal D and fuse panel.
9	Inspect for the following wiring harnesses and connectors: • Between coil terminal A and PCM terminal 1F. • Between coil terminal B and PCM terminal 1E. Is there any malfunction?	Yes	Repair or replace wiring harness.
		No	Go to the next step.
10	Is there continuity between PCM terminal 1B and starter relay with clutch pedal depressed (MTX with starter interlock system), P or N position (ATX)?	Yes	Go to the next step.
		No	Repair or replace wiring harness.
11	Inspect the following: • Battery connection • Battery condition • Transaxle is in Park or Neutral. (ATX) • Clutch is fully depressed. (MTX) • Fuses Are all items normal?	Yes	Go to the next step.
		No	Service if necessary. Repeat Step 11.
12	Is clicking sound heard from starter when ignition switch is turned to START?	Yes	Go to the next step.
		No	Go to Step 14.

STEP	INSPECTION	RESULTS	ACTION
13	Inspect starting system. (See 01–19A–4 STARTER INSPECTION [L3, AJ].) Is starting system normal?	Yes	Inspect for seized/hydrolocked engine, flywheel or drive plate. (See 05–10–32 FLYWHEEL INSPECTION [G35M-R, A65M-R].)
		No	Repair or replace components if required.
14	Do any other electrical accessories work?	Yes	Go to the next step.
		No	Inspect charging system. (See 01–17A–2 BATTERY INSPECTION [L3, AJ].) (See 01–17A–5 GENERATOR INSPECTION [L3, AJ].)
15	**Note** • The following test should be performed on ATX only. For MTX, go to the next step. Connect WDS or equivalent to DLC-2. Access TR PID. Turn ignition switch to ON position. Is TR PID indicated P/N when selecting P or N position?	Yes	Go to the next step.
		No	Inspect adjustment of TR switch. If TR switch is adjusted properly, inspect for open circuit between TR switch and TCM terminal 2H or starter.
16	Connect WDS or equivalent to DLC-2. Turn ignition switch to ON position (Engine off). Retrieve any DTCs. Are there any DTCs displayed?	Yes	**DTC is displayed:** Go to appropriate DTC test. **Communication error message is displayed:** Inspect for the following: • Open circuit between main relay and PCM terminal 1BE or 1AW* • Open circuit between main relay terminal E and PCM terminal 1Q • Main relay is stuck open. • Open or poor GND circuit (PCM terminal 1AZ, 1BB, 1BD or 1BH) • Poor connection of vehicle body GND
		No	**No DTC is displayed:** Inspect the following: • START circuit in ignition switch • Open circuit between ignition switch and starter • Starter interlock switch (MTX)
17	Verify test results. • If okay, return to diagnostic index to service any additional symptoms. • If malfunction remains, inspect related Service Bulletins and/or On-line Repair Information and perform repair or diagnosis. — If vehicle is repaired, troubleshooting completed. — If vehicle is not repaired or additional diagnostic information is not available, reprogram PCM if later calibration is available. Retest.		

* : California emission regulation applicable ATX model

NO.4 HARD TO START/LONG CRANK/ERRATIC START/ERRATIC CRANK [L3]

E6U010318881W09

4	HARD TO START/LONG CRANK/ERRATIC START/ERRATIC CRANK
DESCRIPTION	• Starter cranks engine at normal speed but engine requires excessive cranking time before starting. • Battery is in normal condition.
POSSIBLE CAUSE	• Vacuum leakage • Poor fuel quality • Starting system malfunction • Erratic signal to ignition coil • Spark plug malfunction • Air leakage from intake-air system • Erratic signal from CKP sensor • Erratic signal from CMP sensor • Improper air/fuel mixture ratio control • Air cleaner restriction • Improper operation of electronic throttle control system • PCV valve malfunction • Inadequate fuel pressure • Purge solenoid valve malfunction • MAF sensor contamination • Restriction in exhaust system • EGR valve malfunction • Pressure regulator malfunction **Warning** **The following troubleshooting flow chart contains the fuel system diagnosis and repair procedures. Read the following warnings before servicing the fuel system:** • **Fuel vapor is hazardous. It can easily ignite, causing serious injury and damage. Always keep sparks and flames away from fuel.** • **Fuel line spills and leakage are dangerous. Fuel can ignite and cause serious injuries or death and damage. Fuel can also irritate skin and eyes. To prevent this, always complete "BEFORE REPAIR PROCEDURE" and "AFTER REPAIR PROCEDURE" described in this manual.** **(See 01–14A–6 BEFORE REPAIR PROCEDURE [L3, AJ].)** **(See 01–14A–6 AFTER REPAIR PROCEDURE [L3, AJ].)** **Caution** • **Disconnecting/connecting quick release connector without cleaning it may possibly cause damage to fuel pipe and quick release connector. Always clean quick release connector joint area before disconnecting/connecting, and make sure that it is free of foreign material.**

Diagnostic procedure

STEP	INSPECTION	RESULTS	ACTION
1	Inspect for the following: • Vacuum leakage • Proper fuel quality (e.g. proper octane, contamination, winter/summer blend) • Loose bands on intake-air system • Cracks on intake-air system parts • Air cleaner restriction Are all items normal?	Yes	Go to the next step.
		No	Service if necessary. Repeat Step 1.
2	Connect WDS or equivalent to DLC-2. Turn ignition switch to ON position (Engine off). Retrieve any DTCs. Are there any DTCs displayed?	Yes	**DTC is displayed:** Go to appropriate DTC test.
		No	**No DTC is displayed:** Go to the next step.
3	Is engine overheating?	Yes	Go to symptom troubleshooting "No.17 Cooling system concerns – Overheating".
		No	Go to the next step.
4	Inspect ignition coil related harnesses condition (intermittent open or short circuit) for all cylinders. Are all harnesses condition normal?	Yes	Go to the next step.
		No	Repair suspected wiring harness.

STEP	INSPECTION	RESULTS	ACTION
5	Inspect spark plug conditions. Is spark plug wet, covered with carbon or grayish white?	Yes	**Spark plug is wet or covered with carbon:** Inspect for fuel leakage from fuel injector. **Spark plug is grayish white:** Inspect for clogged fuel injector.
		No	Install spark plugs on original cylinders. Go to the next step.
6	Visually inspect CKP sensor and teeth of crankshaft pulley. Are CKP sensor and teeth of crankshaft pulley normal?	Yes	Go to the next step.
		No	Replace malfunctioning parts.
7	Remove and shake PCV valve. Does PCV valve rattle?	Yes	Go to the next step.
		No	Replace PCV valve.
8	Attempt to start engine at part throttle. Does engine run smoothly at part throttle?	Yes	Inspect electronic throttle control system operation.
		No	Go to the next step.
9	Install fuel pressure gauge between fuel pipe and fuel distributor. Short check connector terminal F/P to body GND using a jumper wire. Turn ignition switch to ON position. Is fuel line pressure correct with ignition switch ON? (See 01–14A–7 FUEL LINE PRESSURE INSPECTION [L3, AJ].)	Yes	Go to the next step.
		No	**Zero or low:** Inspect fuel pump relay and fuel pump circuit. Inspect for clogged fuel line. If okay, replace fuel pump unit. **High:** Replace fuel pump unit.
10	Is fuel line pressure held after ignition switch is turned OFF? (See 01–14A–7 FUEL LINE PRESSURE INSPECTION [L3, AJ].)	Yes	Go to the next step.
		No	Inspect fuel injector. If fuel injector is okay, replace fuel pump unit.
11	Disconnect a vacuum hose from purge solenoid valve and plug opening end of vacuum hose. Attempt to start engine. Is starting condition improved?	Yes	Inspect if purge solenoid valve is stuck open.
		No	Go to the next step.
12	Inspect MAF sensor for contamination. Is there any contamination?	Yes	Replace MAF sensor.
		No	Go to the next step.
13	Is there restriction in exhaust system?	Yes	Inspect exhaust system.
		No	Go to the next step.
14	Inspect engine condition while tapping EGR valve housing. Does engine condition improve?	Yes	Replace EGR valve.
		No	Go to the next step.
15	Inspect starting system. (See 01–19A–4 STARTER INSPECTION [L3, AJ].) Is starting system normal?	Yes	Inspect for loose connectors or poor terminal contact. If okay, remove EGR valve and visually inspect for mechanically stuck EGR valve.
		No	Repair or replace components as required.
16	Verify test results. • If okay, return to diagnostic index to service any additional symptoms. • If malfunction remains, inspect related Service Bulletins and/or On-line Repair Information and perform repair or diagnosis. — If vehicle is repaired, troubleshooting completed. — If vehicle is not repaired or additional diagnostic information is not available, reprogram PCM if later calibration is available. Retest.		

NO.5 ENGINE STALLS-AFTER START/AT IDLE [L3]

E6U010318881W10

5	ENGINE STALLS—AFTER START/AT IDLE
DESCRIPTION	• Engine stops unexpectedly.
POSSIBLE CAUSE	• A/C system operation is improper • Air leakage from intake-air system parts • Purge solenoid valve malfunction • Improper operation of electronic throttle control system • EGR valve malfunction • No signal from CKP sensor due to sensor, related wire or wrong installation • Vacuum leakage • Engine overheating • Low engine compression • Ignition system malfunction • Poor fuel quality • PCV valve malfunction • Air cleaner restriction • Restriction in exhaust system • Electrical connector disconnection • Open or short circuit in fuel pump body and related harness • No battery power supply to PCM or poor GND • Inadequate fuel pressure • Fuel pump body mechanical malfunction • Fuel leakage from fuel injector • Fuel injector clogging • Ignition coil malfunction • Improper air/fuel mixture ratio control • Improper valve timing • Improper operation variable valve timing control system • Immobilizer system (PATS) and/or circuit malfunction • Pressure regulator malfunction **Warning** **The following troubleshooting flow chart contains the fuel system diagnosis and repair procedures. Read the following warnings before servicing the fuel system:** • **Fuel vapor is hazardous. It can easily ignite, causing serious injury and damage. Always keep sparks and flames away from fuel.** • **Fuel line spills and leakage are dangerous. Fuel can ignite and cause serious injuries or death and damage. Fuel can also irritate skin and eyes. To prevent this, always complete "BEFORE REPAIR PROCEDURE" and "AFTER REPAIR PROCEDURE" described in this manual.** **(See 01–14A–6 BEFORE REPAIR PROCEDURE [L3, AJ].)** **(See 01–14A–6 AFTER REPAIR PROCEDURE [L3, AJ].)** **Caution** • **Disconnecting/connecting quick release connector without cleaning it may possibly cause damage to fuel pipe and quick release connector. Always clean quick release connector joint area before disconnecting/connecting, and make sure that it is free of foreign material.**

Diagnostic procedure

STEP	INSPECTION	RESULTS	ACTION
1	Connect WDS or equivalent to DLC-2. Do the following conditions appear? • Engine is not completely started. • DTC B1681 is displayed.	Yes	**Both conditions appear:** Go to Step 3.
		No	**Either or other condition appears:** Go to the next step.
2	Does engine stall after **approx. 2 seconds** since engine is started?	Yes	Go to the next step.
		No	Immobilizer system is okay. Go to Step 10.
3	Is coil connector securely connected to coil?	Yes	Go to the next step.
		No	Connect coil connector securely. Return to Step 2.
4	Does security light illuminate?	Yes	Go to the next step.
		No	Inspect instrument cluster and wiring harness.
5	Connect WDS or equivalent to DLC-2 and retrieve DTC. Are any of the following DTCs displayed? **DTC** **B1213, B1342, B1600, B1602, B1681, B2103, B2431**	Yes	Go to appropriate DTC test.
		No	Go to the next step.
6	Is there continuity between PCM GND terminals 1AZ, 1BB, 1BD, 1BH and GND?	Yes	Go to the next step.
		No	Repair or replace wiring harness.
7	Measure voltage between PCM GND terminals 1AZ, 1BB, 1BD, 1BH and coil terminal C. Is voltage **below 1.0 V**?	Yes	Go to the next step.
		No	Repair or replace wiring harness.
8	Turn ignition switch to ON position. Access VPWR PID. Is VPWR PID normal? **VPWR PID** **Battery voltage**	Yes	Go to the next step.
		No	Repair or replace wiring harness.
9	Disconnect coil connector. Turn ignition switch to ON position. Is there battery voltage at coil connector terminal D?	Yes	Inspect for the following: • Open or short circuit between coil terminal A and PCM terminal 1F. • Open or short circuit between coil terminal B and PCM terminal 1E.
		No	Repair or replace wiring harness between coil connector terminal D and fuse panel.
10	Verify the following: • Vacuum connection • Air cleaner element • No air leakage from intake-air system • No restriction of intake-air system • Proper sealing of intake manifold and components attached to intake manifold: EGR valve • Ignition wiring • Fuel quality: proper octane, contamination, winter/summer blend • Electrical connections • Smooth operation of throttle valve Are all items normal?	Yes	Go to the next step.
		No	Service if necessary. Repeat Step 10.
11	Turn ignition switch to OFF position. Disconnect TP sensor connector. Measure voltage at TP sensor connector terminal B with ignition switch ON. **Voltage** **4.5—5.5 V** Is voltage normal?	Yes	Go to the next step.
		No	Inspect and repair open or short circuit between PCM terminal 2AO and TP sensor terminal B.

STEP	INSPECTION	RESULTS	ACTION
12	Turn ignition switch to OFF position. Disconnect accelerator position sensor connector. Measure voltage at accelerator position sensor connector VREF terminals with ignition switch to ON position. **Voltage** **4.5—5.5 V** Is voltage normal?	Yes	Go to the next step.
		No	Inspect and repair open or short circuit for the following: • PCM terminal 1AJ and accelerator position sensor terminal A • PCM terminal 1AL and accelerator position sensor terminal D
13	Connect WDS or equivalent to DLC-2. Turn ignition switch to ON position (Engine off). Retrieve any DTCs. Are there any DTCs displayed?	Yes	**DTC is displayed:** Go to appropriate DTC test. **Communication error message is displayed:** Inspect for the following: • Open circuit between main relay and PCM terminal 1BE or 1AW* • Open main relay terminal E and PCM terminal 1Q • Main relay is stuck open. • Open or poor GND circuit (PCM terminal 1AZ, 1BB, 1BD or 1BH) • Poor connection of vehicle body GND
		No	**No DTC is displayed:** Go to the next step.
14	Start engine at part throttle. Does engine run smoothly at part throttle?	Yes	Inspect electronic throttle control system operation. (See 01–03A–66 Electronic Throttle Control System Inspection.)
		No	Go to the next step.
15	Connect WDS or equivalent to DLC-2. Access RPM PID. Is RPM PID indicating engine speed during engine cranking?	Yes	Go to the next step.
		No	Inspect for the following: • Open or short circuit in CKP sensor • Open or short circuit between CKP sensor and PCM terminal 2W or 2AQ • Open or short circuit in between CKP sensor and GND • Open or short circuit in CKP sensor harnesses If CKP sensor and harness are okay, go to the next step.
16	Visually inspect CKP sensor and teeth of crankshaft pulley. Are CKP sensor and teeth of crankshaft pulley normal?	Yes	Go to the next step.
		No	Replace malfunctioning parts.
17	Inspect ignition coil related harnesses condition (intermittent open or short circuit) for all cylinders. Are all harnesses condition normal?	Yes	Go to the next step.
		No	Repair suspected wiring harness.
18	Perform Spark Test. (See 01–03A–69 Spark Test.) Is the strong blue spark visible at each cylinder?	Yes	Go to the next step. • If symptom occurs with A/C on, go to Step 23.
		No	Repair or replace malfunctioning part according to spark test results.
19	Inspect spark plug condition. Is spark plug wet, covered with carbon or grayish white?	Yes	**Spark plug is wet or covered with carbon:** Inspect for fuel leakage from injector. **Spark plug is grayish white:** Inspect for clogged fuel injector.
		No	Install spark plugs on original cylinders. Go to the next step.
20	Remove and shake PCV valve. Does PCV valve rattle?	Yes	Go to the next step.
		No	Replace PCV valve.
21	Inspect for restriction in the exhaust system. Is there any restriction?	Yes	Inspect exhaust system.
		No	Go to the next step.

STEP	INSPECTION	RESULTS	ACTION
22	Install fuel pressure gauge between fuel pipe and fuel distributor. Short check connector terminal F/P to body GND using a jumper wire. Turn ignition switch to ON position. Is fuel line pressure correct with ignition switch ON? (See 01–14A–7 FUEL LINE PRESSURE INSPECTION [L3, AJ])	Yes	Go to the next step.
		No	**Zero or low:** Inspect fuel pump relay and fuel pump circuit. Inspect for clogged fuel line. If okay, replace fuel pump unit. **High:** Replace fuel pump unit.
23	Visually inspect for fuel leakage at fuel injector O-ring and fuel line. Service if necessary. Is fuel line pressure held after ignition switch is turned off? (See 01–14A–7 FUEL LINE PRESSURE INSPECTION [L3, AJ])	Yes	Go to the next step.
		No	Inspect fuel injector. If fuel injector is okay, replace fuel pump unit.
24	**Note** • The following test is for stall concerns with A/C on. If other symptoms exist, go to the next step. Connect pressure gauges to A/C low and high pressure side lines. Turn A/C on and measure low side and high side pressures. Are pressures within specifications? (See 07–10–4 REFRIGERANT PRESSURE CHECK [L3, AJ].)	Yes	Go to the next step.
		No	If A/C is always on, go to symptom troubleshooting "No.24 A/C is always on or A/C compressor runs continuously". For other symptoms, inspect the following: • Refrigerant charging amount • Condenser fan operation
25	Disconnect vacuum hose between purge solenoid valve and intake manifold from purge solenoid side. Plug opening end of vacuum hose. Start engine. Is engine stall now eliminated?	Yes	Inspect if purge solenoid valve sticks open. Inspect EVAP control system.
		No	Go to the next step.
26	Is air leakage felt or heard at intake-air system components while racing engine to higher speed?	Yes	Repair or replace.
		No	Go to the next step.
27	Inspect engine condition while tapping EGR valve housing. Does engine condition improve?	Yes	Replace EGR valve.
		No	Go to the next step.
28	Inspect variable valve timing control system operation. (See 01–03A–72 Variable Valve Timing Control System Operation Inspection.) Does variable valve timing control work properly?	Yes	Go to the next step.
		No	Repair or replace malfunctioning parts according to variable valve timing control system operation inspection results.
29	Is engine compression correct?	Yes	Inspect valve timing.
		No	Inspect for cause.
30	Verify test results. • If okay, return to diagnostic index to service any additional symptoms. • If malfunction remains, inspect related Service Bulletins and/or On-line Repair Information and perform repair or diagnosis. — If vehicle is repaired, troubleshooting completed. — If vehicle is not repaired or additional diagnostic information is not available, reprogram PCM if later calibration is available. Retest.		

* : California emission regulation applicable ATX model

NO.6 CRANKS NORMALLY BUT WILL NOT START [L3]

E6U010318881W11

6	CRANKS NORMALLY BUT WILL NOT START
DESCRIPTION	• Starter cranks engine at normal speed but engine will not run. • Refer to symptom troubleshooting "No.5 Engine stalls" if this symptom appears after engine stall. • Fuel is in tank. • Battery is in normal condition.
POSSIBLE CAUSE	• No battery power supply to PCM • Air leakage from intake-air system • Open PCM GND or vehicle body GND • Improper operation of electronic throttle control system • EGR valve malfunction • No signal from CKP sensor due to sensor, related wire or incorrect installation • No signal from CMP sensor due to sensor, related wire or incorrect installation • Low engine compression • Engine overheating • Vacuum leakage • Ignition system malfunction • Improper air/fuel mixture ratio control • Poor fuel quality • PCV valve malfunction • Air cleaner restriction • Restriction in exhaust system • Disconnected electrical connector • Open or short circuit in fuel pump body and related harness • Inadequate fuel pressure • Fuel pump mechanical malfunction • Fuel leakage from injector • Fuel injector is clogged. • Purge solenoid valve malfunction • Spark plug malfunction • Ignition coil malfunction • Improper variable valve timing control system operation • Improper valve timing • Immobilizer system (PATS) and/or circuit malfunction • Pressure regulator malfunction **Warning** **The following troubleshooting flow chart contains the fuel system diagnosis and repair procedures. Read the following warnings before servicing the fuel system:** • **Fuel vapor is hazardous. It can easily ignite, causing serious injury and damage. Always keep sparks and flames away from fuel.** • **Fuel line spills and leakage are dangerous. Fuel can ignite and cause serious injuries or death and damage. Fuel can also irritate skin and eyes. To prevent this, always complete "BEFORE REPAIR PROCEDURE" and "AFTER REPAIR PROCEDURE" described in this manual.** **(See 01–14A–6 BEFORE REPAIR PROCEDURE [L3, AJ].)** **(See 01–14A–6 AFTER REPAIR PROCEDURE [L3, AJ].)** **Caution** • **Disconnecting/connecting quick release connector without cleaning it may possibly cause damage to fuel pipe and quick release connector. Always clean quick release connector joint area before disconnecting/connecting, and make sure that it is free of foreign material.**

Diagnostic procedure

STEP	INSPECTION	RESULTS	ACTION
1	Connect WDS or equivalent to DLC-2. Do any of the following conditions appear? • Engine does not completely start. • DTC B1681 is displayed.	Yes	**Both conditions appear:** Go to Step 3.
		No	**Either or other condition appears:** Go to the next step.
2	Does engine stall after **approx. 2 s** from when it is started?	Yes	Go to the next step.
		No	Immobilizer system is okay. Go to Step 10.
3	Is coil connector securely connected to coil?	Yes	Go to the next step.
		No	Connect coil connector securely. Return to Step 2.
4	Does security light illuminate?	Yes	Go to the next step.
		No	Inspect instrument cluster and wiring harness.
5	Connect WDS equivalent to DLC-2 and retrieve DTC. Are any of the following DTCs displayed? **DTC** **B1213, B1342, B1600, B1601, B1602, B1681, B2103, B2431**	Yes	Go to appropriate DTC test.
		No	Go to the next step.
6	Is there continuity between PCM GND terminals 1AZ, 1BB, 1BD, 1BH and GND?	Yes	Go to the next step.
		No	Repair or replace wiring harness.
7	Measure voltage between PCM GND terminals 1AZ, 1BB, 1BD, 1BH and coil terminal C. Is voltage **below 1.0 V**?	Yes	Go to the next step.
		No	Repair or replace wiring harness.
8	Turn ignition switch to ON position. Access VPWR PID. Is VPWR PID normal? **VPWR PID** **Battery voltage**	Yes	Go to the next step.
		No	Repair or replace wiring harness.
9	Disconnect coil connector. Turn ignition switch to ON position. Is there battery voltage at coil connector terminal D?	Yes	Inspect for the following: • Open or short circuit between coil terminal A and PCM terminal 1F • Open or short circuit between coil terminal B and PCM terminal 1E
		No	Repair or replace wiring harness between coil connector terminal D and fuse panel.
10	Verify the following: • Vacuum connection • External fuel shut off or accessory (such as kill switch, alarm) • Fuel quality: proper octane, contamination, winter/summer blend • No air leakage from intake-air system • Proper sealing of intake manifold and components attached to intake manifold: EGR valve • Ignition wiring • Electrical connections • Fuses • Smooth operation of throttle valve Are all items normal?	Yes	Go to the next step.
		No	Service if necessary. Repeat Step 10.
11	Connect WDS or equivalent to DLC-2. Turn ignition switch to ON position (Engine off). Retrieve any DTCs. Are there any DTCs displayed?	Yes	**DTC is displayed:** Go to appropriate DTC test. **Communication error message is displayed:** Inspect for the following: • Open circuit between main relay and PCM terminal 1BE or 1AW* • Open main relay terminal E and PCM terminal 1Q • Main relay is stuck open. • Open or poor GND circuit (PCM terminal 1AZ, 1BB, 1BD or 1BH) • Poor connection of vehicle body GND
		No	**No DTC is displayed:** Go to the next step.

STEP	INSPECTION	RESULTS	ACTION
12	Turn ignition switch to OFF position. Disconnect TP sensor connector. Measure voltage at TP sensor connector terminal B with ignition switch to ON position. **Voltage** **4.5—5.5 V** Is voltage normal?	Yes	Go to the next step.
		No	Inspect and repair open or short circuit between PCM terminal 2AO and TP sensor terminal B.
13	Turn ignition switch to OFF position. Disconnect accelerator position sensor connector. Measure voltage at accelerator position sensor connector VREF terminals with ignition switch to ON position. **Voltage** **4.5—5.5 V** Is voltage normal?	Yes	Go to the next step.
		No	Inspect and repair open or short circuit for the following: • PCM terminal 1AJ and accelerator position sensor terminal A • PCM terminal 1AL and accelerator position sensor terminal D
14	Does engine start with throttle closed?	Yes	Go to Step 29.
		No	Go to the next step.
15	Will engine start and run smoothly at part throttle?	Yes	Inspect electronic throttle control system operation. (See 01–03A–66 Electronic Throttle Control System Inspection.)
		No	Go to the next step.
16	Connect WDS or equivalent to DLC-2. Access RPM PID. Is RPM PID indicating engine speed when cranking engine?	Yes	Go to the next step.
		No	Inspect for the following: • Open or short circuit in CKP sensor • Open or short circuit between CKP sensor and PCM terminal 2W or 2AQ • Open or short circuit in between CKP sensor and GND • Open or short circuit in CKP sensor harnesses If CKP sensor and harness are okay, go to the next step.
17	Visually inspect CKP sensor and teeth of crankshaft pulley. Are CKP sensor and teeth of crankshaft pulley normal?	Yes	Go to the next step.
		No	Replace malfunctioning parts.
18	Inspect ignition coil related harnesses condition (intermittent open or short circuit) for all cylinders. Are all harnesses condition normal?	Yes	Go to the next step.
		No	Repair suspected wiring harness.
19	Perform Spark Test. (See 01–03A–69 Spark Test.) Is the strong blue spark visible at each cylinder?	Yes	Go to the next step.
		No	Repair or replace malfunctioning part according to spark test results.
20	Inspect spark plug conditions. Is spark plug wet, covered with carbon or grayish white?	Yes	**Spark plug is wet or covered with carbon:** Inspect for fuel leakage from injector. **Spark plug is grayish white:** Inspect for clogged fuel injector.
		No	Install spark plugs on original cylinders. Go to the next step.
21	Remove and shake PCV valve. Does PCV valve rattle?	Yes	Go to the next step.
		No	Replace PCV valve.
22	Inspect for restriction in exhaust system.	Yes	Inspect exhaust system.
		No	Go to the next step.
23	Install fuel pressure gauge between fuel pipe and fuel distributor. Short check connector terminal F/P to body GND using a jumper wire. Turn ignition switch to ON position. Is fuel line pressure correct when ignition switch is turned on/off **five times**? (See 01–14A–7 FUEL LINE PRESSURE INSPECTION [L3, AJ].)	Yes	Go to the next step.
		No	**Zero or low:** Inspect fuel pump relay and fuel pump circuit. Inspect for clogged fuel line. If okay, replace fuel pump unit. **High:** Replace fuel pump unit.

STEP	INSPECTION	RESULTS	ACTION
24	Visually inspect for fuel leakage at fuel injector O-ring and fuel line. Service if necessary. Is fuel line pressure held after ignition switch is turned off? (See 01–14A–7 FUEL LINE PRESSURE INSPECTION [L3, AJ].)	Yes	Go to the next step.
		No	Inspect fuel injector. If fuel injector is okay, replace fuel pump unit.
25	Disconnect vacuum hose between purge solenoid valve and intake manifold from purge solenoid valve side. Plug opening end of vacuum hose. Attempt to start engine. Is starting condition improved?	Yes	Inspect if purge solenoid valve sticks open mechanically. Inspect EVAP control system.
		No	Go to the next step.
26	Is air leakage felt or heard at intake-air system components while racing engine to higher speed?	Yes	Repair or replace.
		No	Go to the next step.
27	Inspect engine condition while tapping EGR valve housing. Is engine condition improved?	Yes	Replace EGR valve.
		No	Go to the next step.
28	Inspect variable valve timing control system operation. (See 01–03A–72 Variable Valve Timing Control System Operation Inspection.) Does variable valve timing control work properly?	Yes	Go to the next step.
		No	Repair or replace malfunctioning parts.
29	Is engine compression correct?	Yes	Inspect valve timing.
		No	Inspect for causes.
30	Verify test results. • If okay, return to diagnostic index to service any additional symptoms. • If malfunction remains, inspect related Service Bulletins and/or On-line Repair Information and perform repair or diagnosis. — If vehicle is repaired, troubleshooting completed. — If vehicle is not repaired or additional diagnostic information is not available, reprogram PCM if later calibratio.. is available. Retest.		

* : California emission regulation applicable ATX model

NO.7 SLOW RETURN TO IDLE [L3]

E6U010318881W12

7	SLOW RETURN TO IDLE
DESCRIPTION	Engine takes more time than normal to return to idle speed.
POSSIBLE CAUSE	• ECT sensor malfunction • Thermostat is stuck open. • Throttle body malfunction • Air leakage from intake-air system

Diagnostic procedure

STEP	INSPECTION	RESULTS	ACTION
1	Connect WDS or equivalent to DLC-2. Turn ignition switch to ON position (Engine off). Retrieve any DTCs. Are there any DTCs displayed?	Yes	**DTC is displayed:** Go to appropriate DTC test.
		No	**No DTC is displayed:** Go to the next step.
2	Remove thermostat and inspect operation. (See 01–12A–9 THERMOSTAT REMOVAL/ INSTALLATION [L3, AJ].) (See 01–12A–10 THERMOSTAT INSPECTION [L3, AJ].) Is thermostat normal?	Yes	ECT and thermostat are okay. Go to the next step.
		No	Access ECT PID on WDS or equivalent. Inspect for both ECT PID and temperature gauge on instrument cluster readings. If temperature gauge on instrument cluster indicates normal range but ECT PID is not same as temperature gauge reading, inspect ECT sensor. If temperature gauge on instrument cluster indicates cold range but ECT PID is normal, inspect temperature gauge and heat gauge unit.
3	Is throttle body free of contamination?	Yes	Inspect for air leakage from intake-air system components while racing engine to higher speed.
		No	Clean or replace throttle body.
4	Verify test results. • If okay, return to diagnostic index to service any additional symptoms. • If malfunction remains, inspect related Service Bulletins and/or On-line Repair Information and perform repair or diagnosis. — If vehicle is repaired, troubleshooting completed. — If vehicle is not repaired or additional diagnostic information is not available, reprogram PCM if later calibration is available. Retest.		

NO.8 ENGINE RUNS ROUGH/ROLLING IDLE [L3]

E6U010318881W13

8	ENGINE RUNS ROUGH/ROLLING IDLE
DESCRIPTION	• Engine speed fluctuates between specified idle speed and lower speed and engine shakes excessively. • Idle speed is too slow and engine shakes excessively.
POSSIBLE CAUSE	• Air leakage from intake-air system parts • A/C system operation is improper • Erratic signal to ignition coil • Spark plug malfunction • Purge solenoid valve malfunction • Improper operation of electronic throttle control system • EGR valve malfunction • Erratic or no signal from CMP sensor • Low engine compression • Improper valve timing • Improper variable valve timing control system operation • Erratic signal from CKP sensor • Poor fuel quality • PCV valve malfunction • Air cleaner restriction • Restriction in exhaust system • Disconnected electrical connectors • Inadequate fuel pressure • Fuel pump body mechanical malfunction • Improper load signal input • Fuel line restriction or clogging • Improper fuel injection control operation • Fuel leakage from fuel injector • Fuel injector clogging • Engine overheating • Vacuum leakage • Pressure regulator malfunction **Warning** **The following troubleshooting flow chart contains fuel system diagnosis and repair procedures. Read following warnings before servicing the fuel system:** • **Fuel vapor is hazardous. It can easily ignite, causing serious injury and damage. Always keep sparks and flames away from fuel.** • **Fuel line spills and leakage are dangerous. Fuel can ignite and cause serious injuries or death and damage. Fuel can also irritate skin and eyes. To prevent this, always complete "BEFORE REPAIR PROCEDURE" and "AFTER REPAIR PROCEDURE" described in this manual.** **(See 01–14A–6 BEFORE REPAIR PROCEDURE [L3, AJ].)** **(See 01–14A–6 AFTER REPAIR PROCEDURE [L3, AJ].)** **Caution** • **Disconnecting/connecting quick release connector without cleaning it may possibly cause damage to fuel pipe and quick release connector. Always clean quick release connector joint area before disconnecting/connecting, and make sure that it is free of foreign material.**

Diagnostic procedure

STEP	INSPECTION	RESULTS	ACTION
1	Verify the following: • External fuel shut off or accessory (such as kill switch, alarm.) • Fuel quality (e.g. proper octane, contamination, winter/summer blend) • No air leakage from intake-air system • Proper sealing of intake manifold and components attached to intake manifold: EGR valve • Ignition wiring • Electrical connections • Fuses • Smooth operation of throttle valve Are all items normal?	Yes	Go to the next step.
		No	Service if necessary. Repeat Step 1.
2	Connect WDS or equivalent to DLC-2. Turn ignition switch to ON position (Engine off). Retrieve any DTCs. Are there any DTCs displayed?	Yes	**DTC is displayed:** Go to appropriate DTC test.
		No	**No DTC is displayed:** Go to the next step.
3	Is engine overheating?	Yes	Go to symptom troubleshooting "No.17 Cooling system concerns - Overheating".
		No	Go to the next step.
4	**Note** • The following test is for engine running at rough idle with A/C on. If other symptoms exist, go to the next step. Connect pressure gauge to A/C low and high pressure side lines. Start engine and idle it. Turn A/C switch on. Measure low side and high side pressures. Are pressures within specifications? (See 07–10–4 REFRIGERANT PRESSURE CHECK [L3, AJ].)	Yes	Go to the next step.
		No	If A/C is always on, go to symptom troubleshooting "No.24 A/C is always on or A/C compressor runs continuously". For other symptoms, inspect the following: • Refrigerant charging amount • Condenser fan operation
5	**Note** • The following test is for engine running rough with P/S on. If other symptoms exist, go to the next step. Start engine and idle it. • Measure voltage at PCM terminal 2T. (See 01–40A–9 PCM INSPECTION [L3].) • Is voltage normal?	Yes	Go to the next step.
		No	Inspect power steering pressure switch operation and wiring harness between P/S pressure switch connector and PCM terminal 2T.
6	Visually inspect CKP sensor and teeth of crankshaft pulley. Are CKP sensor and teeth of crankshaft pulley normal?	Yes	Go to the next step.
		No	Replace malfunctioning parts.
7	Inspect ignition coil related harnesses condition (intermittent open or short circuit) for all cylinders. Are all harnesses condition normal?	Yes	Go to the next step.
		No	Repair suspected wiring harness.
8	Inspect spark plug condition. Is spark plug wet, covered with carbon or grayish white?	Yes	**Spark plug is wet or covered with carbon:** Inspect for fuel leakage from injector. **Spark plug is grayish white:** Inspect for clogged fuel injector.
		No	Install spark plugs on original cylinders. Go to the next step.
9	Perform electronic throttle control system operation inspection. (See 01–03A–66 Electronic Throttle Control System Inspection.) Does electronic throttle control system work properly?	Yes	Go to the next step.
		No	Repair or replace malfunctioning part according to electronic throttle control system operation inspection results.

STEP	INSPECTION	RESULTS	ACTION
10	Install fuel pressure gauge between fuel pipe and fuel distributor. Start engine and idle it. Measure fuel line pressure during idle. Is fuel line pressure correct during idle? (See 01–14A–7 FUEL LINE PRESSURE INSPECTION [L3, AJ].)	Yes	Go to the next step.
		No	**Zero or low:** Inspect for clogged fuel line. If okay, replace fuel pump unit. **High:** Replace fuel pump unit.
11	Visually inspect for fuel leakage at fuel injector, O-ring, and fuel line. Service if necessary. Does fuel line pressure hold after ignition switch is turned off? (See 01–14A–7 FUEL LINE PRESSURE INSPECTION [L3, AJ])	Yes	Go to the next step.
		No	Inspect fuel injector. If fuel injector is okay, replace fuel pump unit.
12	Connect WDS or equivalent to DLC-2. Start the engine and idle it. Access LONG FT1 PID. Measure LONG FT1 PID during idle. Is PID value between **–14% and +14%**?	Yes	Go to the next step.
		No	LONG FT1 PID is out of specification. Less than specification (too rich): • Inspect EVAP control system. — If system is okay, go to Step 14. Greater than specification (too lean): • Inspect for air leakage at intake-air system components. — If system is okay, go to the next step.
13	Disconnect vacuum hose between purge solenoid valve and intake manifold from purge solenoid valve side. Plug opening end of vacuum hose. Start engine. Does engine condition improve?	Yes	Check if purge solenoid valve sticks open mechanically. Inspect EVAP control system.
		No	Go to the next step.
14	Remove and shake PCV valve. Does PCV valve rattle?	Yes	Go to the next step.
		No	Replace PCV valve.
15	Inspect for restriction in exhaust system. Is there any restriction?	Yes	Inspect exhaust system.
		No	Go to the next step.
16	Visually inspect CMP sensor and teeth of camshaft. Are CMP sensor and teeth of camshaft normal?	Yes	Go to the next step.
		No	Replace malfunctioning parts.
17	Inspect engine condition while tapping EGR valve housing. Does engine condition improve?	Yes	Replace EGR valve.
		No	Go to the next step.
18	Inspect variable valve timing control system operation. (See 01–03A–72 Variable Valve Timing Control System Operation Inspection.) Does variable valve timing control system work properly?	Yes	Go to the next step.
		No	Repair or replace malfunctioning parts.
19	Is engine compression correct?	Yes	Inspect valve timing.
		No	Inspect for causes.
20	Verify test results. • If okay, return to diagnostic index to service any additional symptoms. • If malfunction remains, inspect related Service Bulletins and/or On-line Repair Information and perform repair or diagnosis. — If vehicle is repaired, troubleshooting completed. — If vehicle is not repaired or additional diagnostic information is not available, reprogram PCM if later calibration is available. Retest.		

NO.10 LOW IDLE/STALLS DURING DECELERATION [L3]

E6U010318881W15

10	LOW IDLE/STALLS DURING DECELERATION
DESCRIPTION	• Engine stops unexpectedly at beginning of deceleration or recovery from deceleration.
POSSIBLE CAUSE	• Vacuum leakage • Improper operation of electronic throttle control system • Air leakage from intake-air system • Improper air/fuel mixture ratio control • EVAP control system malfunction • Accelerator position sensor or related circuit malfunction • Accelerator position sensor misadjustment • TP sensor or related circuit malfunction • MAF sensor or related circuit malfunction • Brake switch or related circuit malfunction • Neutral/clutch pedal position switch or related circuit malfunction (MTX) • TR switch or related circuit malfunction (ATX) • Improper A/C magnetic clutch operation

NO.9 FAST IDLE/RUNS ON [L3]

E6U010318881W14

9	FAST IDLE/RUNS ON
DESCRIPTION	• Engine speed continues during fast idle after warm-up. • Engine runs after ignition switch is turned off.
POSSIBLE CAUSE	• ECT sensor malfunction • Air leakage from intake-air system • Throttle body malfunction • Accelerator position sensor misadjustment • Cruise control system operation improperly • Improper load signal input • Improper operation of electronic throttle control system

Diagnostic procedure

STEP	INSPECTION	RESULTS	ACTION
1	Connect WDS or equivalent to DLC-2. Access ECT PID. Start and warm up engine to normal operating temperature. Is ECT PID reading between **82—112°C {180—234°F}**?	Yes	Go to the next step.
		No	**ECT PID is higher than 112°C {234°F}:** Go to symptom troubleshooting "No.17 Cooling system concerns - Overheating". **ECT PID is less than 82°C {180°F}:** Go to symptom troubleshooting "No.18 Cooling system concerns - Runs cold".
2	Connect WDS or equivalent to DLC-2. Turn ignition switch to ON position (Engine off). Retrieve any DTCs. Are there any DTCs displayed?	Yes	**DTC is displayed:** Go to appropriate DTC test.
		No	**No DTC is displayed:** Go to the next step.
3	Connect the WDS or equivalent to DLC-2. Inspect the value at the following PCM and TCM (ATX) PIDs. **PCM PIDs:** • AC_REQ • COLP • CPP (MTX) • CPP/PNP (MTX) • PSP **TCM PID:** • TR Are the PID values normal?	Yes	Go to the next step.
		No	**If the AC_REQ PID is not specified:** Inspect A/C switch, refrigerant pressure switch (low/high) and fan switch. **If the COLP PID is not specified:** Inspect refrigerant pressure switch (middle). **If the CPP PID is not specified:** Inspect clutch switch. **If the CPP/PNP PID is not specified:** Inspect neutral switch. **If the PSP PID is not specified:** Inspect power steering pressure switch. **If the TR PID is not specified:** Inspect TR switch.
4	Is there air leakage felt or heard at intake-air system components while racing engine to higher speed?	Yes	Repair or replace parts if necessary.
		No	Inspect the following: • Electronic throttle control system operation • Accelerator position sensor adjustment
5	Verify test results. • If okay, return to diagnostic index to service any additional symptoms. • If malfunction remains, inspect related Service Bulletins and/or On-line Repair Information and perform repair or diagnosis. — If vehicle is repaired, troubleshooting completed. — If vehicle is not repaired or additional diagnostic information is not available, reprogram PCM if later calibration is available. Retest.		

Diagnostic procedure

STEP	INSPECTION	RESULTS	ACTION
1	Does engine idle roughly?	Yes	Go to symptom troubleshooting "No.8 Engine runs rough/rolling idle".
		No	Go to the next step.
2	Turn off A/C switch and fan switch. Does A/C magnetic clutch engage?	Yes	Go to symptom troubleshooting "No.24 A/C is always on or A/C compressor runs continuously."
		No	Go to the next step.
3	Verify the following: • Proper routing of and no damage to vacuum lines • No air leakage from intake-air system Are all items normal?	Yes	Go to the next step.
		No	Service if necessary. Repeat Step 3.
4	Connect WDS or equivalent to DLC-2. Turn ignition switch to ON (Engine off). Retrieve any DTCs. Are there any DTCs displayed?	Yes	**DTC is displayed:** Go to appropriate DTC test.
		No	**No DTC is displayed:** Go to the next step.
5	Perform electronic throttle control system operation inspection. (See 01–03A–66 Electronic Throttle Control System Inspection.) Does electronic throttle control system work properly?	Yes	Go to the next step.
		No	Repair or replace malfunctioning part according to electronic throttle control system operation inspection results.
6	Disconnect vacuum hose between purge solenoid valve and intake manifold from purge solenoid valve side. Plug opening end of vacuum hose. Drive vehicle. Does engine condition improve?	Yes	Inspect EVAP control system.
		No	Go to the next step.
7	Connect WDS or equivalent to DLC-2. Access the following PCM and TCM (ATX) PIDs. **PCM PIDs:** • APP1 • APP2 • BOO • CPP (MTX) • CPP/PNP (MTX) • TP_REL • MAF • VSS **TCM PID:** • TR • VSS Drive the vehicle with monitoring PIDs. Are the PID values within specified?	Yes	Go to the next step.
		No	**If the APP1 or APP2 PID is not specified:** Inspect accelerator position sensor. **If the BOO PID is not specified:** Inspect brake switch. **If the CPP PID is not specified:** Inspect clutch switch. **If the CPP/PNP PID is not specified:** Inspect neutral switch. **If the TP_REL PID is not specified:** Inspect TP sensor. **If the MAF PID is not specified:** Inspect MAF sensor. **If the VSS PID for PCM is not specified:** Inspect VSS sensor. (MTX without ABS) Inspect ABS wheel speed sensors. (except for MTX without ABS) **If the TR PID is not specified:** Inspect TR switch. **If the VSS PID for TCM is not specified:** Inspect VSS sensor.
8	Verify test results. • If okay, return to diagnostic index to service any additional symptoms. • If malfunction remains, inspect related Service Bulletins and/or On-line Repair Information and perform repair or diagnosis. — If vehicle is repaired, troubleshooting completed. — If vehicle is not repaired or additional diagnostic information is not available, reprogram PCM if later calibration is available. Retest.		

NO.11 ENGINE STALLS/QUITS, ENGINE RUNS ROUGH, MISSES, BUCK/JERK, HESITATION/STUMBLE, SURGES [L3]

E6U010318881W16

11	**ENGINE STALLS/QUITS — ACCELERATION/CRUISE** **ENGINE RUNS ROUGH — ACCELERATION/CRUISE** **MISSES — ACCELERATION/CRUISE** **BUCK/JERK — ACCELERATION/CRUISE/DECELERATION** **HESITATION/STUMBLE — ACCELERATION** **SURGES — ACCELERATION/CRUISE**
DESCRIPTION	• Engine stops unexpectedly at beginning of acceleration or during acceleration. • Engine stops unexpectedly while cruising. • Engine speed fluctuates during acceleration or cruising. • Engine misses during acceleration or cruising. • Vehicle bucks/jerks during acceleration, cruising, or deceleration. • Momentary pause at beginning of acceleration or during acceleration • Momentary minor irregularity in engine output
POSSIBLE CAUSE	• A/C system operation is improper. • Erratic signal or no signal from CMP sensor • Air leakage from intake-air system parts • Purge solenoid valve malfunction • Improper operation of electronic throttle control system • EGR valve malfunction • Erratic signal from CKP sensor • Low engine compression • Vacuum leakage • Poor fuel quality • Main relay intermittent malfunction • Throttle body malfunction • Engine overheating • Spark plug malfunction • Improper air/fuel mixture ratio control operation • Improper Variable tumble system operation • Air cleaner restriction • PCV valve malfunction • Improper valve timing due to jumping out timing chain • Restriction in exhaust system • Intermittent open or short in fuel body pump circuit • Inadequate fuel pressure • Fuel pump mechanical malfunction • Fuel leakage from fuel injector • Fuel injector clogging • Fuel line restriction or clogging • Pressure regulator malfunction • Accelerator position sensor misadjustment • TP sensor misadjustment • Intermittent open or short of MAF sensor, TP sensor, Accelerator position sensor and VSS • ATX malfunction (ATX) • Clutch slippage (MTX) • Improper Variable intake air system operation **Warning** **The following troubleshooting flow chart contains the fuel system diagnosis and repair procedures. Read the following warnings before servicing the fuel system:** • **Fuel vapor is hazardous. It can easily ignite, causing serious injury and damage. Always keep sparks and flames away from fuel.** • **Fuel line spills and leakage are dangerous. Fuel can ignite and cause serious injuries or death and damage. Fuel can also irritate skin and eyes. To prevent this, always complete "BEFORE REPAIR PROCEDURE" and "AFTER REPAIR PROCEDURE" described in this manual.** **(See 01–14A–6 BEFORE REPAIR PROCEDURE [L3, AJ].)** **(See 01–14A–6 AFTER REPAIR PROCEDURE [L3, AJ].)** **Caution** • **Disconnecting/connecting quick release connector without cleaning it may possibly cause damage to fuel pipe and quick release connector. Always clean quick release connector joint area before disconnecting/connecting, and make sure that it is free of foreign materi**

Diagnostic procedure

STEP	INSPECTION	RESULTS	ACTION
1	Verify the following: • Vacuum connection • Air cleaner element • No air leakage from intake-air system • No restriction of intake-air system • Proper sealing of intake manifold and components attached to intake manifold: such as EGR valve • Ignition wiring • Fuel quality (e.g. proper octane, contamination, winter/summer blend) • Electrical connections • Smooth operation of throttle valve Are all items normal?	Yes	Go to the next step.
		No	Service if necessary. Repeat Step 1.
2	Connect WDS or equivalent to DLC-2. Turn ignition switch to ON position (Engine off). Retrieve any DTCs. Are there any DTCs displayed?	Yes	**DTC is displayed:** Go to appropriate DTC test.
		No	**No DTC is displayed:** Go to the next step.
3	Is engine overheating?	Yes	Go to symptom troubleshooting "No.17 Cooling system concerns - Overheating".
		No	Go to the next step.
4	Connect WDS or equivalent to DLC-2. Access the following PCM PIDs. • APP1 • APP2 • RPM • VPWR • MAF • TP_REL • VSS Drive the vehicle with monitoring PIDs. Are the PID values within specified?	Yes	Go to the next step.
		No	**If APP1, APP2 PIDs is not specified:** Inspect if output signal from accelerator position sensor changes smoothly. **If RPM PID is not specified:** Inspect CKP sensor and related harness for vibration or intermittent open/short circuit. **If VPWR PID is not specified:** Inspect for open circuit intermittently. **If MAF PID is not specified:** Inspect for open circuit of MAF sensor and related wire harness intermittently. **If TP_REL PID is not specified:** Inspect if output signal from TP sensor changes smoothly. **If VSS PID is not specified:** Inspect for open circuit of VSS and related wire harness intermittently.
5	Visually inspect CKP sensor and teeth of crankshaft pulley. Are CKP sensor and teeth of crankshaft pulley normal?	Yes	Go to the next step.
		No	Replace malfunctioning parts.
6	Inspect spark plug conditions. Is spark plug wet, covered with carbon or grayish white?	Yes	**Spark plug is wet or covered with carbon:** Inspect for fuel leakage from fuel injector. **Spark plug is grayish white:** Inspect for clogged fuel injector.
		No	Install spark plugs on original cylinders. Go to the next step.
7	Remove and shake PCV valve. Does PCV valve rattle?	Yes	Go to the next step.
		No	Replace PCV valve.
8	Perform electronic throttle control system operation inspection. (See 01–03A–66 Electronic Throttle Control System Inspection.) Does electronic throttle control system work properly?	Yes	Go to the next step.
		No	Repair or replace malfunctioning part according to electronic throttle system operation inspection results.
9	Inspect for restriction in the exhaust system. Is there any restriction?	Yes	Inspect exhaust system.
		No	Go to the next step.

STEP	INSPECTION	RESULTS	ACTION
10	Install fuel pressure gauge between fuel pipe and fuel distributor. Short check connector terminal F/P to body GND using a jumper wire. Turn ignition switch to ON position. Is fuel line pressure correct with ignition switch to ON position? (See 01–14A–7 FUEL LINE PRESSURE INSPECTION [L3, AJ].)	Yes	Go to the next step.
		No	**Zero or low:** Inspect fuel pump relay and fuel pump circuit. Inspect for clogged fuel line. If okay, replace fuel pump unit. **High:** Replace fuel pump unit.
11	Visually inspect for fuel leakage at fuel injector O-ring and fuel line. Service if necessary. Is fuel line pressure held after ignition switch is turned off? (See 01–14A–7 FUEL LINE PRESSURE INSPECTION [L3, AJ].)	Yes	Go to the next step.
		No	Inspect fuel injector. If fuel injector is okay, replace fuel pump unit.
12	**Note** • The following test is for engine stalling with A/C on. If other symptom exists, go to the next step. Connect a pressure gauge to A/C low and high pressure side lines. Turn A/C on and measure low side and high side pressure. Are pressures within specifications? (See 07–10–4 REFRIGERANT PRESSURE CHECK [L3, AJ].)	Yes	Go to the next step.
		No	If A/C is always on, go to symptom troubleshooting "No.24 A/C is always on or A/C compressor runs continuously". For other symptoms, inspect the following: • Refrigerant charging amount • Condenser fan operation
13	**Note** • The following test should be performed for symptom with cruise control ON. If other symptoms exist, go to the next step. Inspect cruise control system. Is cruise control system normal?	Yes	Go to the next step.
		No	Repair or replace malfunctioning parts.
14	Disconnect vacuum hose between purge solenoid valve and intake manifold from purge solenoid valve side. Plug opening end of vacuum hose. Drive vehicle. Does engine condition improve?	Yes	Go to the next step. Inspect if purge solenoid valve sticks open mechanically. Inspect EVAP control system.
		No	Go to the next step.
15	Visually inspect CMP sensor and projections of camshaft pulley. Are CMP sensor and projections of camshaft pulley normal?	Yes	Go to the next step.
		No	Replace malfunctioning parts.
16	Inspect Variable tumble system operation. (See 01–03A–67 Variable Tumble System Operation Inspection.) Is Variable tumble system normal?	Yes	Go to the next step.
		No	Repair or replace malfunctioning parts.
17	Inspect EGR system. (See 01–03A–70 EGR Control System Inspection.) Is EGR system normal?	Yes	Go to the next step.
		No	Replace malfunctioning parts.
18	Is engine compression correct?	Yes	Inspect the following: • Valve timing • Internal transaxle part (ATX) • Clutch (MTX)
		No	Inspect for cause.
19	Verify test results. • If okay, return to diagnostic index to service any additional symptoms. • If malfunction remains, inspect related Service Bulletins and/or On-line Repair Information and perform repair or diagnosis. — If vehicle is repaired, troubleshooting completed. — If vehicle is not repaired or additional diagnostic information is not available, reprogram PCM if later calibration is available. Retest.		

NO.12 LACK/LOSS OF POWER-ACCELERATION/CRUISE [L3]

E6U010318881W17

12	LACK/LOSS OF POWER — ACCELERATION/CRUISE
DESCRIPTION	Performance is poor under load (e.g., power down when climbing hills).
POSSIBLE CAUSE	• Improper A/C system operation • Erratic signal or no signal from CMP sensor • Air leakage from intake-air system parts • Improper Variable intake air system operation • Improper Variable tumble system operation • Improper operation of electronic throttle control system • Purge control solenoid malfunction • EGR valve malfunction • Brake dragging • Erratic signal from CKP sensor • Low engine compression • Vacuum leakage • Poor fuel quality • Engine overheating • Throttle body malfunction • Spark plug malfunction • Air cleaner restriction • PCV valve malfunction • Improper valve timing due to jumping out of timing chain • Improper variable valve timing control operation • Restriction in exhaust system • Intermittent open or short in fuel pump related circuit • Inadequate fuel pressure • Fuel pump mechanical malfunction • Fuel line restriction or clogging • Fuel leakage from fuel injector • Fuel injector clogging • Intermittent open or short circuit in MAF sensor, Accelerator position sensor, TP sensor and VSS • ATX malfunction (ATX) • Clutch slippage (MTX) **Warning** **The following troubleshooting flow chart contains the fuel system diagnosis and repair procedures. Read the following warnings before servicing the fuel system:** • **Fuel vapor is hazardous. It can easily ignite, causing serious injury and damage. Always keep sparks and flames away from fuel.** • **Fuel line spills and leakage are dangerous. Fuel can ignite and cause serious injuries or death and damage. Fuel can also irritate skin and eyes. To prevent this, always complete "BEFORE REPAIR PROCEDURE" and "AFTER REPAIR PROCEDURE" described in this manual.** **(See 01–14A–6 BEFORE REPAIR PROCEDURE [L3, AJ].)** **(See 01–14A–6 AFTER REPAIR PROCEDURE [L3, AJ].)** **Caution** • **Disconnecting/connecting quick release connector without cleaning it may possibly cause damage to fuel pipe and quick release connector. Always clean quick release connector joint area before disconnecting/connecting, and make sure that it is free of foreign material.**

Diagnostic procedure

STEP	INSPECTION	RESULTS	ACTION
1	Verify the following: • Vacuum connection • Air cleaner element • No air leakage from intake-air system • No restriction of intake-air system • Proper sealing of intake manifold and components attached to intake manifold; such as EGR valve • Fuel quality (e.g. proper octane, contamination, winter/summer blend) Are all items normal?	Yes	Go to the next step.
		No	Service if necessary. Repeat Step 1.
2	Connect WDS or equivalent to DLC-2. Turn ignition switch to ON position (Engine off). Retrieve any DTCs. Are there any DTCs displayed?	Yes	**DTC is displayed:** Go to appropriate DTC test.
		No	**No DTC is displayed:** Go to the next step.
3	Is engine overheating?	Yes	Go to symptom troubleshooting "No.17 Cooling system concerns - Overheating".
		No	Go to the next step.
4	Connect WDS or equivalent to DLC-2. Access the following PCM PIDs. • APP1 • APP2 • RPM • VPWR • MAF • TP_REL • VSS Drive the vehicle with monitoring PIDs. Are the PID values within specified?	Yes	Go to the next step.
		No	**If APP1, APP2 PIDs is not specified:** Inspect if output signal accelerator position sensor changes smoothly. **If RPM PID is not specified:** Inspect CKP sensor and related wiring harness for vibration or intermittent open/short circuit or both. **If MAF PID is not specified:** Inspect for intermittent open circuit of MAF sensor and related wiring harness. **If TP_REL PID is not specified:** Inspect if output signal TP sensor changes smoothly. If **VSS PID is not specified:** Inspect for intermittent open circuit of VSS and relate wiring harness.
5	Visually inspect CKP sensor and teeth of crankshaft pulley. Are CKP sensor and teeth of crankshaft pulley normal?	Yes	Go to the next step.
		No	Replace malfunctioning parts.
6	Inspect spark plug condition. Is spark plug wet, covered with carbon or grayish white?	Yes	**Spark plug is wet or covered with carbon:** Inspect for fuel leakage from fuel injector. Inspect spark plug and ignition coil related harness. **Spark plug is grayish white:** Inspect for clogged fuel injector.
		No	Install spark plugs on original cylinders. Go to the next step.
7	Remove and shake PCV valve. Does PCV valve rattle?	Yes	Go to the next step.
		No	Replace PCV valve.
8	Perform electronic throttle control system operation inspection. (See 01–03A–66 Electronic Throttle Control System Inspection.) Does electronic throttle control system work properly?	Yes	Go to the next step.
		No	Repair or replace malfunctioning part according to electronic throttle control system operation inspection results.
9	Inspect for restriction in exhaust system. Is there any restriction?	Yes	Inspect exhaust system.
		No	Go to the next step.
10	Install fuel pressure gauge between fuel pipe and fuel distributor. Short check connector terminal F/P to body GND using a jumper wire. Turn ignition switch to ON position. Is fuel line pressure correct with ignition switch to ON position? (See 01–14A–7 FUEL LINE PRESSURE INSPECTION [L3, AJ].)	Yes	Go to the next step.
		No	**Zero or low:** Inspect fuel pump relay and fuel pump circuit. Inspect for clogged fuel line. If okay, replace fuel pump unit. **High:** Replace fuel pump unit.

STEP	INSPECTION	RESULTS	ACTION
11	Inspect Variable tumble system operation. (See 01–03A–67 Variable Tumble System Operation Inspection.) Does Variable tumble system work properly?	Yes	Go to the next step.
		No	Repair or replace malfunctioning parts.
12	Inspect Variable intake air system operation. (See 01–03A–67 Variable Intake Air System Operation Inspection.) Does Variable intake air system work properly?	Yes	Go to the next step.
		No	Repair or replace malfunctioning parts.
13	**Note** • The following test is for engine stalling with A/C on concern. If other symptoms exist, go to the next step. Connect pressure gauge to A/C low and high side pressure lines. Turn A/C on and measure low side and high side pressures. Are pressures within specifications? (See 07–10–4 REFRIGERANT PRESSURE CHECK [L3, AJ].)	Yes	Go to the next step.
		No	If A/C is always on, go to symptom troubleshooting "No.24 A/C is always on or A/C compressor runs continuously". For other symptoms, inspect the following: • Refrigerant charging amount • Condenser fan operation
14	Inspect for A/C cut-off operation. (See 01–03A–70 A/C Cut-off Control System Inspection.) Does A/C cut-off work properly?	Yes	Go to the next step.
		No	Inspect A/C cut-off system components.
15	Disconnect vacuum hose between purge solenoid valve and intake manifold from purge solenoid valve side. Plug opening end of vacuum hose. Drive vehicle. Does engine condition improve?	Yes	Inspect if purge solenoid valve is stuck open mechanically. Inspect EVAP control system.
		No	Go to the next step.
16	Visually inspect CMP sensor and projections of camshaft pulley. Are CMP sensor and projections of camshaft pulley normal?	Yes	Go to the next step.
		No	Replace malfunctioning parts.
17	Inspect EGR system. (See 01–03A–70 EGR Control System Inspection.) Is EGR system normal?	Yes	Go to the next step.
		No	Replace malfunctioning parts according to EGR control system operation inspection results.
18	Inspect variable valve timing control system operation. (See 01–03A–72 Variable Valve Timing Control System Operation Inspection.) Does variable valve timing control system work properly?	Yes	Go to the next step.
		No	Repair or replace malfunctioning parts according to variable valve timing control system inspection results.
19	Is engine compression correct?	Yes	Inspect the following: • Valve timing • Internal transaxle components (ATX) • Clutch (MTX) • Brake system for dragging
		No	Inspect for cause.
20	Verify test results. • If okay, return to diagnostic index to service any additional symptoms. • If malfunction remains, inspect related Service Bulletins and/or On-line Repair Information and perform repair or diagnosis. — If vehicle is repaired, troubleshooting completed. — If vehicle is not repaired or additional diagnostic information is not available, reprogram PCM if later calibration is available. Retest.		

NO.13 KNOCKING/PINGING-ACCELERATION/CRUISE [L3]

E6U010318881W18

13	KNOCKING/PINGING - ACCELERATION/CRUISE
DESCRIPTION	Sound is produced when air/fuel mixture is ignited by something other than spark plug (e.g., hot spot in combustion chamber).
POSSIBLE CAUSE	• Engine overheating due to cooling system malfunction • ECT sensor malfunction • IAT sensor malfunction • MAF sensor malfunction • Knock sensor malfunction • Erratic signal from CMP sensor • Inadequate engine compression • Inadequate fuel pressure **Warning** **The following troubleshooting flow chart contains the fuel system diagnosis and repair procedures. Read the following warnings before servicing the fuel system:** • **Fuel vapor is hazardous. It can easily ignite, causing serious injury and damage. Always keep sparks and flames away from fuel.** • **Fuel line spills and leakage are dangerous. Fuel can ignite and cause serious injuries or death and damage. Fuel can also irritate skin and eyes. To prevent this, always complete "BEFORE REPAIR PROCEDURE" and "AFTER REPAIR PROCEDURE" described in this manual.** **(See 01–14A–6 BEFORE REPAIR PROCEDURE [L3, AJ].)** **(See 01–14A–6 AFTER REPAIR PROCEDURE [L3, AJ].)** **Caution** • **Disconnecting/connecting quick release connector without cleaning it may possibly cause damage to fuel pipe and quick release connector. Always clean quick release connector joint area before disconnecting/connecting, and make sure that it is free of foreign material.**

Diagnostic procedure

STEP	INSPECTION	RESULTS	ACTION
1	Connect WDS or equivalent to DLC-2. Access ECT PID. Verify ECT PID is **less than 116°C {241°F}** during driving. Is ECT PID less than specification?	Yes	Go to the next step.
		No	Inspect cooling system for cause of overheating.
2	Connect WDS or equivalent to DLC-2. Access IAT and MAF PIDs. Monitor each PID. (See 01–40A–9 PCM INSPECTION [L3].) Are PIDs normal?	Yes	Go to the next step.
		No	**If IAT PID is not specified:** Inspect IAT sensor **If MAF PID is not specified:** Inspect MAF sensor
3	Connect WDS or equivalent to DLC-2. Turn key to ON (engine off). Are there any DTCs displayed?	Yes	**DTC is displayed:** Go to appropriate DTC test.
		No	**No DTC is displayed:** Go to the next step.
4	Is engine compression correct?	Yes	Go to the next step.
		No	Inspect for cause.
5	Install fuel pressure gauge between fuel pipe and fuel distributor. Start engine and idle it. Measure fuel line pressure during idle. Is fuel line pressure correct during idle? (See 01–14A–7 FUEL LINE PRESSURE INSPECTION [L3, AJ].)	Yes	Inspect ignition timing.
		No	**Zero or low:** Inspect fuel pump relay and fuel pump circuit. Inspect for clogged fuel line. If okay, replace fuel pump unit. **High:** Replace fuel pump unit.
6	Inspect knock sensor. Is knock sensor normal?	Yes	Inspect ignition timing.
		No	Replace knock sensor.
7	Verify test results. • If okay, return to diagnostic index to service any additional symptoms. • If malfunction remains, inspect related Service Bulletins and/or On-line Repair Information and perform repair or diagnosis. — If vehicle is repaired, troubleshooting completed. — If vehicle is not repaired or additional diagnostic information is not available, reprogram PCM if later calibration is available. Retest.		

NO.14 POOR FUEL ECONOMY [L3]

E6U010318881W19

14	POOR FUEL ECONOMY
DESCRIPTION	Fuel economy is unsatisfactory.
POSSIBLE CAUSE	• Contaminated air cleaner element • Variable intake air system malfunction • Engine cooling system malfunction • Improper ATF level (ATX) • Weak spark • Poor fuel quality • Erratic or no signal from CMP sensor • Clutch slippage (MTX) • Variable tumble system malfunction • Improper variable valve timing control system operation • Improper coolant level • Inadequate fuel pressure • Spark plug malfunction • PCV valve malfunction • Brake dragging • Improper valve timing due to jumping out of timing chain • Contaminated MAF sensor • Improper engine compression • Exhaust system clogging **Warning** **The following troubleshooting flow chart contains fuel system diagnosis and repair procedures. Read following warnings before servicing fuel system:** • **Fuel vapor is hazardous. It can easily ignite, causing serious injury and damage. Always keep sparks and flames away from fuel.** • **Fuel line spills and leakage are dangerous. Fuel can ignite and cause serious injuries or death and damage. Fuel can also irritate skin and eyes. To prevent this, always complete "BEFORE REPAIR PROCEDURE" and "AFTER REPAIR PROCEDURE" described in this manual.** **(See 01–14A–6 BEFORE REPAIR PROCEDURE [L3, AJ].)** **(See 01–14A–6 AFTER REPAIR PROCEDURE [L3, AJ].)** **Caution** • **Disconnecting/connecting quick release connector without cleaning it may possibly cause damage to fuel pipe and quick release connector. Always clean quick release connector joint area before disconnecting/connecting, and make sure that it is free of foreign material.**

Diagnostic procedure

STEP	INSPECTION	RESULTS	ACTION
1	Inspect for the following: • Air cleaner element for contamination • ATF level (ATX) • Fuel quality • Coolant level • Brake dragging • Clutch slippage (MTX) Are all items normal?	Yes	Go to the next step.
		No	Service if necessary. Repeat Step 1.
2	Connect WDS or equivalent to DLC-2. Turn ignition switch to ON position (Engine off). Retrieve any DTCs. Are there any DTCs displayed?	Yes	**DTC is displayed:** Go to appropriate DTC test.
		No	**No DTC is displayed:** Go to the next step.
3	Access ECT PID. Drive vehicle while monitoring PID. (See 01–40A–9 PCM INSPECTION [L3].) Is PID within specification?	Yes	Go to the next step.
		No	Inspect for coolant leakage, cooling fan and condenser fan operations or thermostat operation.

STEP	INSPECTION	RESULTS	ACTION
4	Perform spark test. (See 01–03A–69 Spark Test) Is strong blue spark visible at each cylinder?	Yes	Inspect for the following: • Spark plugs malfunction • CMP sensor is improperly installed. • Trigger wheel damage on camshaft • Open or short circuit on CMP sensor • Open or short circuit between CMP sensor and PCM terminal 2S or 2AM • Open or short circuit between CMP sensor and GND. Repair or replace malfunctioning parts. If okay, go to the next step.
		No	Inspect suspect ignition coil and connector.
5	Install fuel pressure gauge between fuel pipe and fuel distributor. Start engine and idle it. Measure fuel line pressure during idle. Is fuel line pressure correct during idle? (See 01–14A–7 FUEL LINE PRESSURE INSPECTION [L3, AJ].)	Yes	Go to the next step.
		No	**Zero or low:** Inspect fuel pump relay and fuel pump circuit. Inspect for clogged fuel line. If okay, replace fuel pump unit **High:** Replace fuel pump unit.
6	Inspect for Variable tumble system operation. (See 01–03A–67 Variable Tumble System Operation Inspection.) Does Variable tumble system work properly?	Yes	Go to the next step.
		No	Repair or replace malfunctioning parts.
7	Inspect for variable valve timing control system operation. (See 01–03A–72 Variable Valve Timing Control System Operation Inspection.) Does variable valve timing control system work properly?	Yes	Go to the next step.
		No	Repair or replace malfunctioning parts.
8	Inspect for Variable intake air system operation. (See 01–03A–67 Variable Intake Air System Operation Inspection.) Does Variable intake air system work properly?	Yes	Go to the next step.
		No	Repair or replace malfunctioning parts.
9	Remove and shake PCV valve. Does PCV valve rattle?	Yes	Go to the next step.
		No	Replace PCV valve.
10	Inspect for restriction in the exhaust system. Is there any restriction?	Yes	Inspect exhaust system.
		No	Go to the next step.
11	Inspect for contaminated MAF sensor. Is there any contamination?	Yes	Go to the next step.
		No	Inspect for cause.
12	Inspect MAF sensor for contamination. Is there any contamination?	Yes	Replace MAF sensor.
		No	Go to the next step.
13	Is engine compression correct?	Yes	Inspect valve timing.
		No	Inspect for cause.
14	Verify test results. • If okay, return to diagnostic index to service any additional symptoms. • If malfunction remains, inspect related Service Bulletins and/or On-line Repair Information and perform repair or diagnosis. — If vehicle is repaired, troubleshooting completed. — If vehicle is not repaired or additional diagnostic information is not available, reprogram PCM if later calibration is available. Retest.		

NO.15 EMISSION COMPLIANCE [L3]

E6U010318881W20

15	EMISSION COMPLIANCE
DESCRIPTION	Fails emissions test.
POSSIBLE CAUSE	• Vacuum lines leakage or blockage • Cooling system malfunction • Spark plug malfunction • Leakage from intake manifold • Erratic or no signal from CMP sensor • Inadequate fuel pressure • PCV valve malfunction or incorrect valve installation • EGR valve malfunction • Exhaust system clogging • Fuel tank ventilation system malfunction • Charcoal canister damage • Air cleaner element clogging or restriction • Throttle body malfunction • Improper air/fuel mixture ratio control operation • Catalyst converter malfunction • Engine internal parts malfunction • Excessive carbon is built up in combustion chamber • Improper engine compression • Improper valve timing **Warning** **The following troubleshooting flow chart contains fuel system diagnosis and repair procedures. Read following warnings before servicing fuel system:** • **Fuel vapor is hazardous. It can easily ignite, causing serious injury and damage. Always keep sparks and flames away from fuel.** • **Fuel line spills and leakage are dangerous. Fuel can ignite and cause serious injuries or death and damage. Fuel can also irritate skin and eyes. To prevent this, always complete "BEFORE REPAIR PROCEDURE" and "AFTER REPAIR PROCEDURE" described in this manual.** **(See 01–14A–6 BEFORE REPAIR PROCEDURE [L3, AJ].)** **(See 01–14A–6 AFTER REPAIR PROCEDURE [L3, AJ].)** **Caution** • **Disconnecting/connecting quick release connector without cleaning it may possibly cause damage to fuel pipe and quick release connector. Always clean quick release connector joint area before disconnecting/connecting, and make sure that it is free of foreign material.**

Diagnostic procedure

STEP	INSPECTION	RESULTS	ACTION
1	Inspect for following: • Vacuum lines for leakage or blockage • Electrical connections • Proper maintenance schedule followed • Intake-air system and air cleaner element concerns: obstructions, leakage or dirtiness Are all items normal?	Yes	Go to the next step.
		No	Service if necessary. Repeat Step 1.
2	Connect WDS or equivalent to DLC-2. Turn ignition switch to ON position (Engine off). Retrieve any DTCs. Are there any DTCs displayed?	Yes	**DTC is displayed:** Go to appropriate DTC test.
		No	**No DTC is displayed:** Go to the next step.
3	Is any other driveability concern present?	Yes	Go to appropriate symptom troubleshooting.
		No	Go to the next step.
4	Connect WDS or equivalent to DLC-2. Access ECT PID. Warm up engine and idle it. Verify ECT PID is correct. (See 01–40A–9 PCM INSPECTION [L3].) Is ECT PID correct?	Yes	Go to the next step.
		No	Inspect for coolant leakage, cooling fan and condenser fan operation or thermostat operation.
5	Perform Spark Test. (See 01–03A–69 Spark Test.) Is the strong blue spark visible at each cylinder?	Yes	Inspect for the following: • Spark plugs malfunction • Improperly installed CMP sensor • Damage of trigger wheel on camshaft • Open or short circuit on CMP sensor • Open or short circuit between CMP sensor and PCM terminal 2S or 2AM • Open or short circuit between CMP sensor and GND Repair or replace malfunctioning parts. If okay, go to the next step.
		No	Inspect suspect ignition coil and connector.
6	Install fuel pressure gauge between fuel pipe and fuel distributor. Start engine and idle it. Measure fuel line pressure during idle. Is fuel line pressure correct during idle? (See 01–14A–7 FUEL LINE PRESSURE INSPECTION [L3, AJ])	Yes	Go to the next step.
		No	**Zero or low:** Inspect for clogged fuel line. If okay, replace fuel pump unit. **High:** Replace fuel pump unit.
7	Remove and shake PCV valve. Does PCV valve rattle?	Yes	Go to the next step.
		No	Replace PCV valve.
8	Inspect for fuel saturation inside charcoal canister. Is excess amount of liquid fuel present in canister?	Yes	Replace charcoal canister.
		No	Inspect fuel tank vent system. Then, go to the next step.
9	Is there restriction in exhaust system?	Yes	Inspect exhaust system.
		No	Go to the next step.
10	Inspect three-way catalytic converter. Is three-way catalytic converter normal?	Yes	Inspect EGR system. (See 01–03A–70 EGR Control System Inspection.)
		No	Replace three-way catalytic converter.
11	Verify test results. • If okay, return to diagnostic index to service any additional symptoms. • If malfunction remains, inspect related Service Bulletins and/or On-line Repair Information and perform repair or diagnosis. — If vehicle is repaired, troubleshooting completed. — If vehicle is not repaired or additional diagnostic information is not available, reprogram PCM if later calibration is available. Retest.		

NO.16 HIGH OIL CONSUMPTION/LEAKAGE [L3]

E6U010318881W21

16	HIGH OIL CONSUMPTION/LEAKAGE
DESCRIPTION	Oil consumption is excessive.
POSSIBLE CAUSE	• PCV valve malfunction • Improper dipstick • Improper engine oil viscosity • Engine internal parts malfunction

Diagnostic procedure

STEP	INSPECTION	RESULTS	ACTION
1	Remove and shake PCV valve. Does PCV valve rattle?	Yes	Go to the next step.
		No	Replace PCV valve.
2	Inspect for the following: • External leakage • Proper dipstick • Proper engine oil viscosity Are all items normal?	Yes	Inspect internal engine parts such as valves, valve guides, valve stem seals, cylinder head drain passage, and piston rings.
		No	Service if necessary. Repeat Step 2.
3	Verify test results. • If okay, return to diagnostic index to service any additional symptoms. • If malfunction remains, inspect related Service Bulletins and/or On-line Repair Information and perform repair or diagnosis. — If vehicle is repaired, troubleshooting completed. — If vehicle is not repaired or additional diagnostic information is not available, reprogram PCM if later calibration is available. Retest.		

NO.17 COOLING SYSTEM CONCERNS-OVERHEATING [L3]

E6U010318881W22

17	COOLING SYSTEM CONCERNS-OVERHEATING
DESCRIPTION	Engine runs at higher than normal temperature/overheats.
POSSIBLE CAUSE	• Improper coolant level • Blown fuses • Coolant leakage • Excessive A/C system pressure • A/C system operation is improper • Improper water/anti-freeze mixture • Fans reverse rotation • Poor radiator condition • Thermostat malfunction • Radiator hoses damage • Condenser fan is inoperative. • Improper or damaged radiator cap • Cooling fan is inoperative. • Coolant overflow system malfunction • Improper tension of drive belt • Drive belt damage

Diagnostic procedure

STEP	INSPECTION	RESULTS	ACTION
1	Inspect the following: • Engine coolant level • Coolant leakage • Water and anti-freeze mixture • Radiator condition • Collapsed or restricted radiator hoses • Radiator pressure cap • Overflow system • Fan rotational direction • Fuses Are all items normal?	Yes	Go to the next step.
		No	Service if necessary. Repeat Step 1.
2	Connect WDS or equivalent to DLC-2. Turn ignition switch to ON position (Engine off). Retrieve any DTCs. Are there any DTCs displayed?	Yes	**DTC is displayed:** Go to appropriate DTC test.
		No	**No DTC is displayed:** Go to the next step.
3	Start engine and run it at idle speed. Turn A/C switch on and set blower fan to any speed. Does A/C compressor engage?	Yes	Go to Step 5.
		No	Inspect for the following and repair or replace if necessary: • Refrigerant charging amount • Open circuit between A/C relay and PCM terminal 1I • Seized A/C magnetic clutch • A/C magnetic clutch malfunction If all items are okay, go to the next step.
4	Start the engine and run it at idle speed. Access AC_REQ PID using WDS or equivalent. Turn A/C switch on and set blower fan any speed. Does the PID turn ON and OFF properly? (See 01–40A–9 PCM INSPECTION [L3].)	Yes	Go to the next step.
		No	Inspect the following: • Refrigerant pressure switch operation • A/C switch is stuck open. • Open or short circuit between refrigerant pressure switch and PCM terminal 1AU • Open circuit of blower motor fan switch and resistc (if blower motor does not operate) • Evaporator temperature sensor and A/C amplifier
5	Inspect cooling fan control system operation. (See 01–03A–71 Cooling Fan Control System Inspection.) Does cooling fan control system work properly?	Yes	Go to the next step.
		No	Repair or replace malfunctioning parts.
6	Is drive belt normal?	Yes	Go to the next step.
		No	Replace drive belt.
7	Is there any leakage around heater unit in passenger compartment?	Yes	Inspect and service heater for leakage.
		No	Go to the next step.
8	Is there any leakage at coolant hoses and/or radiator?	Yes	Replace malfunctioning part.
		No	Go to the next step.
9	Cool down the engine. Remove thermostat and inspect operation. (See 01–12A–9 THERMOSTAT REMOVAL/ INSTALLATION [L3, AJ].) (See 01–12A–10 THERMOSTAT INSPECTION [L3, AJ].) Is thermostat normal?	Yes	Engine coolant temperature and thermostat are okay, inspect engine block for leakage or blockage.
		No	Access ECT PID. Inspect for both ECT PID and temperature gauge readings. If temperature gauge on instrument cluster indicates normal range but ECT PID is not same as temperature gauge reading, inspect ECT sensor. If temperature gauge on instrument cluster indicates overheating but ECT PID is normal, inspect temperature gauge and heat gauge unit.
10	Verify test results. • If okay, return to diagnostic index to service any additional symptoms. • If malfunction remains, inspect related Service Bulletins and/or On-line Repair Information and perform repair or diagnosis. — If vehicle is repaired, troubleshooting completed. — If vehicle is not repaired or additional diagnostic information is not available, reprogram PCM if later calibration is available. Retest.		

NO.18 COOLING SYSTEM CONCERNS-RUNS COLD [L3]

E6U010318881W23

18	COOLING SYSTEM CONCERNS-RUNS COLD
DESCRIPTION	Engine takes excessive time to reach normal operating temperature.
POSSIBLE CAUSE	• Thermostat malfunction • Condenser fan system malfunction • Cooling fan system malfunction

Diagnostic procedure

STEP	INSPECTION	RESULTS	ACTION
1	Is customer complaint "Lack of passenger compartment heat" only?	Yes	Inspect A/C and heater system.
		No	Go to the next step.
2	Does engine speed continue during fast idle?	Yes	Go to symptom troubleshooting "No.9 Fast idle/runs on".
		No	Go to the next step.
3	Remove thermostat and inspect operation. (See 01–12A–9 THERMOSTAT REMOVAL/ INSTALLATION [L3, AJ].) (See 01–12A–10 THERMOSTAT INSPECTION [L3, AJ].) Is thermostat normal?	Yes	Go to the next step.
		No	Replace thermostat.
4	Inspect cooling fan control system operation. (See 01–03A–71 Cooling Fan Control System Inspection.) Does cooling fan control system work properly?	Yes	Access ECT PID. Inspect for both ECT PID and temperature gauge on instrument cluster readings. If temperature gauge on instrument cluster indicates normal range but ECT PID is not same as temperature gauge reading, inspect ECT sensor. If temperature gauge on instrument cluster indicates cold range but ECT PID is normal, inspect temperature gauge and heat gauge unit.
		No	Repair or replace malfunctioning part.
5	Verify test results. • If okay, return to diagnostic index to service any additional symptoms. • If malfunction remains, inspect related Service Bulletins and/or On-line Repair Information and perform repair or diagnosis. — If vehicle is repaired, troubleshooting completed. — If vehicle is not repaired or additional diagnostic information is not available, reprogram PCM if later calibration is available. Retest.		

NO.19 EXHAUST SMOKE [L3]

E6U010318881W24

19	EXHAUST SMOKE
DESCRIPTION	Blue, black, or white smoke from exhaust system
POSSIBLE CAUSE	**Blue smoke (Burning oil):** • PCV valve malfunction • Engine internal oil leakage **White smoke (Water in combustion):** • Cooling system malfunction (coolant loss) • Engine internal coolant leakage **Black smoke (Rich fuel mixture):** • Air cleaner restriction • Intake-air system is collapsed or restricted. • Fuel return line is restricted. • Excessive fuel pressure • Improper engine compression • Injector fuel leakage • Ignition system malfunction **Warning** **The following troubleshooting flow chart contains fuel system diagnosis and repair procedures. Read following warnings before servicing fuel system:** • **Fuel vapor is hazardous. It can easily ignite, causing serious injury and damage. Always keep sparks and flames away from fuel.** • **Fuel line spills and leakage are dangerous. Fuel can ignite and cause serious injuries or death and damage. Fuel can also irritate skin and eyes. To prevent this, always complete "BEFORE REPAIR PROCEDURE" and "AFTER REPAIR PROCEDURE" described in this manual.** **(See 01–14A–6 BEFORE REPAIR PROCEDURE [L3, AJ].)** **(See 01–14A–6 AFTER REPAIR PROCEDURE [L3, AJ].)** **Caution** • **Disconnecting/connecting quick release connector without cleaning it may possibly cause damage to fuel pipe and quick release connector. Always clean quick release connector joint area before disconnecting/connecting, and make sure that it is free of foreign materi**

Diagnostic procedure

STEP	INSPECTION	RESULTS	ACTION
1	What color is smoke coming from exhaust system?	Blue	Burning oil is indicated. Go to the next step.
		White	Water in combustion is indicated. Go to Step 3.
		Black	Rich fuel mixture is indicated. Go to Step 4.
2	Remove and shake PCV valve. Does PCV valve rattle?	Yes	Inspect for the following: • Damaged valve guide, stems or valve seals • Blocked oil drain passage in cylinder head • Piston ring is not seated, seized or worn. • Damaged cylinder bore If other driveability symptoms are present, return to diagnostic index to service any additional symptoms.
		No	Replace PCV valve.
3	Does cooling system hold pressure?	Yes	Inspect for the following: • Cylinder head gasket leakage • Intake manifold gasket leakage • Cracked or porous engine block If other driveability symptoms are present, return to diagnostic index to service any additional symptoms.
		No	Inspect for cause.
4	Inspect for the following: • Air cleaner restriction • Collapsed or restricted intake-air system • Restricted fuel return line Are all items normal?	Yes	Go to the next step.
		No	Service if necessary. Repeat Step 4.
5	Connect WDS or equivalent to DLC-2. Turn ignition switch to ON position (Engine off). Retrieve any DTCs. Are there any DTCs displayed?	Yes	**DTC is displayed:** Go to appropriate DTC test.
		No	**No DTC is displayed:** Go to the next step.
6	Install fuel pressure gauge between fuel pipe and fuel distributor. Start engine and idle it. Measure fuel line pressure during idle. Is fuel line pressure correct during idle? (See 01–14A–7 FUEL LINE PRESSURE INSPECTION [L3, AJ].)	Yes	Go to the next step.
		No	**Zero or low:** • Inspect for clogged fuel line. • If okay, replace fuel pump unit. **High:** • Replace fuel pump unit.
7	Perform Spark Test. (See 01–03A–69 Spark Test.) Is the strong blue spark visible at each cylinder?	Yes	Inspect spark plugs and CMP sensor.
		No	Repair or replace malfunctioning part according to spark test results.
8	Verify test results. • If okay, return to diagnostic index to service any additional symptoms. • If malfunction remains, inspect related Service Bulletins and/or On-line Repair Information and perform repair or diagnosis. — If vehicle is repaired, troubleshooting completed. — If vehicle is not repaired or additional diagnostic information is not available, reprogram PCM if later calibration is available. Retest.		

NO.20 FUEL ODOR (IN ENGINE COMPARTMENT) [L3]

E6U010318881W25

20	FUEL ODOR (IN ENGINE COMPARTMENT)
DESCRIPTION	Gasoline fuel smell or visible leakage
POSSIBLE CAUSE	• Excessive fuel pressure • Purge solenoid valve malfunction • Fuel tank vent system blockage • Charcoal canister malfunction • Fuel leakage from fuel system **Warning** **The following troubleshooting flow chart contains fuel system diagnosis and repair procedures. Read following warnings before servicing fuel system:** • **Fuel vapor is hazardous. It can easily ignite, causing serious injury and damage. Always keep sparks and flames away from fuel.** • **Fuel line spills and leakage are dangerous. Fuel can ignite and cause serious injuries or death and damage. Fuel can also irritate skin and eyes. To prevent this, always complete "BEFORE REPAIR PROCEDURE" and "AFTER REPAIR PROCEDURE" described in this manual.** **(See 01–14A–6 BEFORE REPAIR PROCEDURE [L3, AJ].)** **(See 01–14A–6 AFTER REPAIR PROCEDURE [L3, AJ].)** **Caution** • **Disconnecting/connecting quick release connector without cleaning it may possibly cause damage to fuel pipe and quick release connector. Always clean quick release connector joint area before disconnecting/connecting, and make sure that it is free of foreign material.**

Diagnostic procedure

STEP	INSPECTION	RESULTS	ACTION
1	Visually inspect for fuel leakage at fuel injector O-ring and fuel line. Service if necessary. Install fuel pressure gauge between fuel pipe and fuel distributor. Start engine and idle it. Measure fuel line pressure during idle. Is fuel line pressure correct during idle? (See 01–14A–7 FUEL LINE PRESSURE INSPECTION [L3, AJ].)	Yes	Go to the next step.
		No	Replace fuel pump unit.
2	Inspect for blockage/restriction or opening between engine vacuum port and charcoal canister. Inspect for blockage in fuel tank vent system. Is fault indicated?	Yes	Replace vacuum hose.
		No	Go to the next step.
3	Inspect purge solenoid valve. (See 01–16A–13 PURGE SOLENOID VALVE INSPECTION [L3, AJ].) Is solenoid operating properly?	Yes	Go to the next step.
		No	Replace purge solenoid valve.
4	Connect WDS or equivalent to DLC-2. Turn ignition switch to ON position (Engine off). Retrieve any DTCs. Are there any DTCs displayed?	Yes	**DTC is displayed:** Go to appropriate DTC test.
		No	**No DTC is displayed:** Inspect charcoal canister for fuel saturation. If excess amount of liquid fuel is present, replace charcoal canister.
5	Verify test results. • If okay, return to diagnostic index to service any additional symptoms. • If malfunction remains, inspect related Service Bulletins and/or On-line Repair Information and perform repair or diagnosis. — If vehicle is repaired, troubleshooting completed. — If vehicle is not repaired or additional diagnostic information is not available, reprogram PCM if later calibration is available. Retest.		

NO.21 ENGINE NOISE [L3]

E6U010318881W26

21	ENGINE NOISE
DESCRIPTION	Engine noise from under hood
POSSIBLE CAUSE	**Squeal, click or chirp noise:** • Improper engine oil level • Improper drive belt tension **Rattle sound noise:** • Loose parts **Hiss sound noise:** • Vacuum leakage • Loose spark plug • Air leakage from intake-air system • Improper variable air duct (VAD) control system operation **Rumble or grind noise:** • Improper drive belt tension **Rap or roar noise:** • Exhaust system looseness **Other noise:** • Camshaft friction gear noise or MLA noise • Timing chain noise

Diagnostic procedure

STEP	INSPECTION	RESULTS	ACTION
1	Is squeal, click or chirp sound present?	Yes	Inspect engine oil level or drive belts.
		No	Go to the next step.
2	Is rumble or grinding noise present?	Yes	Inspect drive belts.
		No	Go to the next step.
3	Is rattle noise present?	Yes	Inspect location of rattle for loose parts.
		No	Go to the next step.
4	Is hissing noise present?	Yes	Inspect for following: • Vacuum leakage • Spark plug looseness • Intake-air system leakage • Variable air duct (VAD) control system operation (See 01–03A–72 Variable Air Duct (VAD) Control System Operation Inspection.)
		No	Go to the next step.
5	Is rap or roar noise present?	Yes	Inspect exhaust system for loose parts.
		No	Go to the next step.
6	Is knocking noise present?	Yes	Go to symptom troubleshooting "No.11 Knocking/ pinging".
		No	If noise comes from engine internal, inspect for friction gear, timing chain or MLA noise.
7	Verify test results. • If okay, return to diagnostic index to service any additional symptoms. • If malfunction remains, inspect related Service Bulletins and/or On-line Repair Information and perform repair or diagnosis. — If vehicle is repaired, troubleshooting completed. — If vehicle is not repaired or additional diagnostic information is not available, reprogram PCM if later calibration is available. Retest.		

NO.22 VIBRATION CONCERNS (ENGINE) [L3]

E6U010318881W27

22	VIBRATION CONCERNS (ENGINE)
DESCRIPTION	• Vibration from under hood or driveline
POSSIBLE CAUSE	• Loose attaching bolts or worn parts • Components malfunction such as worn parts

Diagnostic procedure

STEP	INSPECTION	RESULTS	ACTION
1	Inspect the following components for loose attaching bolts or worn parts: • Cooling fan • Condenser fan • Drive belt and pulleys • Engine mounts All items normal?	Yes	Inspect the following systems: • Wheels • ATX • Driveline • Suspension
		No	Readjust or retighten engine mount installation position. Service if necessary for other parts.
2	Verify test results. • If okay, return to diagnostic index to service any additional symptoms. • If malfunction remains, inspect related Service Bulletins and/or On-line Repair Information and perform repair or diagnosis. — If vehicle is repaired, troubleshooting completed. — If vehicle is not repaired or additional diagnostic information is not available, reprogram PCM if later calibration is available. Retest.		

NO.23 A/C DOES NOT WORK SUFFICIENTLY [L3]

E6U010318881W28

23	A/C DOES NOT WORK SUFFICIENTLY.
DESCRIPTION	A/C compressor magnetic clutch does not engage when A/C switch is turned on.
POSSIBLE CAUSE	• Improper refrigerant charging amount • Open A/C magnetic clutch • Open circuit between A/C relay and A/C magnetic clutch • Poor GND of A/C magnetic clutch • Refrigerant pressure switch is stuck open. • A/C relay is stuck open. • Seized A/C compressor • Open circuit between A/C switch and PCM through both refrigerant pressure switch and A/C amplifier

Diagnostic procedure

STEP	INSPECTION	RESULTS	ACTION
1	Connect WDS or equivalent to DLC-2. Turn ignition switch to ON position (Engine off). Retrieve any DTCs. Are there any DTCs displayed?	Yes	**DTC is displayed:** Go to appropriate DTC test.
		No	**No DTC is displayed:** Go to the next step.
2	Disconnect A/C compressor connector. Start engine and turn A/C switch on. Is there correct voltage at terminal of A/C compressor magnetic clutch connector? **Specification** **10.5 V or more**	Yes	Inspect for GND condition of magnetic clutch on A/C compressor. If GND condition is okay, inspect for open circuit magnetic clutch coil.
		No	Go to the next step.
3	Disconnect refrigerant pressure switch connector. Connect jumper wire between terminals of A/C high-pressure switch connector. Connect jumper wires between terminals of refrigerant pressure switch connector. Turn ignition switch to ON position. Access AC_REQ PID using WDS or equivalent. Turn A/C switch on and set blower fan to any speed. Does the PID turn ON and OFF properly?	Yes	Inspect refrigerant pressure switch operation. If switch is okay, go to the next step.
		No	Inspect for the following: • A/C switch is stuck open. • Open circuit between refrigerant pressure switch and PCM terminal 1AU • Open circuit between blower motor fan switch and resistor (if blower motor does not operate) • Evaporator temperature sensor and A/C amplifier

STEP	INSPECTION	RESULTS	ACTION
4	Remove jumper wire from switch connector. Reconnect connector to refrigerant pressure switch. Start engine and turn A/C switch on. Does fan operate?	Yes	Inspect whether A/C relay is stuck open. Replace if necessary.
		No	Inspect the following and repair or replace if necessary: • Refrigerant charging amount • A/C compressor for seizure
5	Verify test results. • If okay, return to diagnostic index to service any additional symptoms. • If malfunction remains, inspect related Service Bulletins and/or On-line Repair Information and perform repair or diagnosis. — If vehicle is repaired, troubleshooting completed. — If vehicle is not repaired or additional diagnostic information is not available, reprogram PCM if later calibration is available. Retest.		

NO.24 A/C IS ALWAYS ON OR A/C COMPRESSOR RUNS CONTINUOUSLY [L3]

E6U010318881W29

24	A/C IS ALWAYS ON OR A/C COMPRESSOR RUNS CONTINUOUSLY.
DESCRIPTION	A/C compressor magnetic clutch does not disengage.
POSSIBLE CAUSE	• A/C compressor magnetic clutch engagement is stuck. • A/C relay is stuck closed. • Short to GND between A/C switch and PCM • Short to GND circuit between A/C relay and PCM • A/C relay to magnetic clutch circuit shorted to battery power

Diagnostic procedure

STEP	INSPECTION	RESULTS	ACTION
1	Connect WDS or equivalent to DLC-2. Turn ignition switch to ON position (Engine off). Retrieve any DTCs. Are there any DTCs displayed?	Yes	**DTC is displayed:** Go to appropriate DTC test.
		No	**No DTC is displayed:** Go to the next step.
2	Start engine and idle it. Turn A/C switch on. Remove A/C relay. Does A/C magnetic clutch disengage?	Yes	Inspect for the following: • A/C relay is stuck closed. • Short to GND circuit between A/C relay and PCM terminal 1I If both items okay, go to the next step.
		No	Inspect if circuit between A/C relay and magnetic clutch shorts to battery power circuit. If circuit is okay, inspect magnetic clutch for stuck engagement or clearance.
3	Disconnect refrigerant pressure switch connector. Start engine and turn A/C switch on. **Note** • A/C should not work when disconnecting connector. If A/C remains working, short to GND circuit may be present. Does A/C remain working?	Yes	Inspect for short to GND circuit between refrigerant pressure switch and PCM terminal 1AU
		No	Go to the next step.
4	Reconnect refrigerant pressure switch connector. Turn off A/C switch. **Note** • A/C should not work when turning A/C switch off. If A/C remains working, short to GND circuit may be present. Does A/C remain working?	Yes	Inspect following: • Short to GND circuit between A/C switch and A/C amplifier • Short to GND circuit between A/C amplifier and refrigerant pressure switch
		No	Inspect whether A/C switch is stuck closed.
5	Verify test results. • If okay, return to diagnostic index to service any additional symptoms. • If malfunction remains, inspect related Service Bulletins and/or On-line Repair Information and perform repair or diagnosis. — If vehicle is repaired, troubleshooting completed. — If vehicle is not repaired or additional diagnostic information is not available, reprogram PCM if later calibration is available. Retest.		

NO.25 A/C IS NOT CUT OFF UNDER WIDE OPEN THROTTLE CONDITIONS [L3]

E6U010318881W30

25	A/C IS NOT CUT OFF UNDER WOT CONDITIONS.
DESCRIPTION	A/C compressor magnetic clutch does not disengage under WOT.
POSSIBLE CAUSE	• Accelerator position sensor malfunction • Accelerator position sensor misadjustment • Loosely installed accelerator position sensor.

Diagnostic procedure

STEP	INSPECTION	RESULTS	ACTION
1	Does A/C compressor disengage when A/C switch is turned off?	Yes	Go to the next step.
		No	Go to symptom troubleshooting "No.24 A/C is always on or A/C compressor runs continuously".
2	Connect WDS or equivalent to DLC-2. Turn ignition switch to ON position (Engine off). Retrieve any DTCs. Are there any DTCs displayed?	Yes	**DTC is displayed:** Go to appropriate DTC test.
		No	**No DTC is displayed:** Inspect accelerator position sensor.
3	Verify test results. • If okay, return to diagnostic index to service any additional symptoms. • If malfunction remains, inspect related Service Bulletins and/or On-line Repair Information and perform repair or diagnosis. — If vehicle is repaired, troubleshooting completed. — If vehicle is not repaired or additional diagnostic information is not available, reprogram PCM if later calibration is available. Retest.		

NO.26 EXHAUST SULPHUR SMELL [L3]

E6U010318881W31

26	EXHAUST SULPHUR SMELL
DESCRIPTION	Rotten egg smell (sulphur) from exhaust
POSSIBLE CAUSE	• Electrical connectors are disconnected or connected poorly • Charcoal canister malfunction • Vacuum lines are disconnected or connected improperly. • Improper fuel pressure • Poor fuel quality **Warning** **The following troubleshooting flow chart contains fuel system diagnosis and repair procedures. Read following warnings before servicing fuel system:** **• Fuel vapor is hazardous. It can easily ignite, causing serious injury and damage. Always keep sparks and flames away from fuel.** **• Fuel line spills and leakage are dangerous. Fuel can ignite and cause serious injuries or death and damage. Fuel can also irritate skin and eyes. To prevent this, always complete "BEFORE REPAIR PROCEDURE" and "AFTER REPAIR PROCEDURE" described in this manual.** **(See 01–14A–6 BEFORE REPAIR PROCEDURE [L3, AJ].)** **(See 01–14A–6 AFTER REPAIR PROCEDURE [L3, AJ].)** **Caution** **• Disconnecting/connecting quick release connector without cleaning it may possibly cause damage to fuel pipe and quick release connector. Always clean quick release connector joint area before disconnecting/connecting, and make sure that it is free of foreign material.**

Diagnostic procedure

STEP	INSPECTION	RESULTS	ACTION
1	Are any driveability or exhaust smoke concerns present?	Yes	Go to appropriate flow chart.
		No	Go to the next step.
2	Inspect the following: • Electrical connections • Vacuum lines • Fuel quality Are all items normal?	Yes	Go to the next step.
		No	Service if necessary. Repeat Step 2.
3	Connect WDS or equivalent to DLC-2. Turn ignition switch to ON position (Engine off). Retrieve any DTCs. Are there any DTCs displayed?	Yes	**DTC is displayed:** Go to appropriate DTC test.
		No	**No DTC is displayed:** Go to the next step.
4	Install fuel pressure gauge between fuel pipe and fuel distributor. Start engine and idle it. Is fuel line pressure correct during idle? (See 01–14A–7 FUEL LINE PRESSURE INSPECTION [L3, AJ].)	Yes	Go to the next step.
		No	**Zero or low:** Inspect fuel pump relay and fuel pump circuit. Inspect for clogged fuel line. If okay, replace fuel pump unit. **High:** Replace fuel pump unit.
5	Inspect charcoal canister for fuel saturation. Is excess amount of liquid fuel present in canister?	Yes	Replace charcoal canister.
		No	Inspect fuel tank vent system. If fuel tank vent system is okay, suggest trying a different brand since sulfur content can vary in different fuels. If fuel tank vent system is not okay, repair or replace malfunctioning parts.
6	Verify test results. • If okay, return to diagnostic index to service any additional symptoms. • If malfunction remains, inspect related Service Bulletins and/or On-line Repair Information and perform repair or diagnosis. — If vehicle is repaired, troubleshooting completed. — If vehicle is not repaired or additional diagnostic information is not available, reprogram PCM if later calibration is available. Retest.		

NO.27 FUEL REFILL CONCERNS [L3]

E6U010318881W32

27	Fuel refill concerns
DESCRIPTION	• Fuel tank does not fill smoothly.
POSSIBLE CAUSE	• Clogged EVAP pipes • Nonreturn valve malfunction • Improper use of fuel nozzle • Inadequate fuel filling speed **Warning** • **The following troubleshooting flow chart contains the fuel system diagnosis and repair procedures. Read the following warnings before servicing the fuel system:** **— Fuel vapor is hazardous. It can easily ignite, causing serious injury and damage. Always keep sparks and flames away from fuel.** **— Fuel line spills and leakage are dangerous. Fuel can ignite and cause serious injuries or death and damage. Fuel can also irritate skin and eyes. To prevent this, always complete "BEFORE REPAIR PROCEDURE" and "AFTER REPAIR PROCEDURE" described in this manual.** **(See 01–14A–6 BEFORE REPAIR PROCEDURE [L3, AJ].)** **(See 01–14A–6 AFTER REPAIR PROCEDURE [L3, AJ].)** **Caution** • **Disconnecting/connecting quick release connector without cleaning it may possibly cause damage to fuel pipe and quick release connector. Always clean quick release connector joint area before disconnecting/connecting, and make sure that it is free of foreign material.**

Diagnostic procedure

STEP	INSPECTION		ACTION
1	Connect WDS or equivalent to DLC-2. Turn ignition switch to ON position (Engine off). Retrieve any DTCs. Are there any DTCs displayed?	Yes	**DTC is displayed:** Go to appropriate DTC test.
		No	**No DTC is displayed:** Go to the next step.
2	Remove fuel-filler pipe. Make sure nonreturn valve is installed properly. Inspect nonreturn valve operation. Is nonreturn valve normal?	Yes	Inspect for the following: • Improper use of fuel nozzle • Inadequate fuel filling speed
		No	**Nonreturn valve is installed improperly:** • Reinstall nonreturn valve to proper position. **Nonreturn valve does not operate properly:** • Replace nonreturn valve.
3	Verify test results. • If okay, return to diagnostic index to service any additional symptoms. • If malfunction remains, inspect related Service Bulletins and/or On-line Repair Information and perform repair or diagnosis. — If vehicle is repaired, troubleshooting completed. — If vehicle is not repaired or additional diagnostic information is not available, reprogram PCM if later calibration is available. Retest.		

NO.28 FUEL FILLING SHUT OFF ISSUES [L3]

E6U010318881W33

28	Fuel filling shut off issues
DESCRIPTION	• Fuel does not shut off properly.
POSSIBLE CAUSE	• Clogged EVAP pipes • Nonreturn valve malfunction • Fuel shut-off valve malfunction • Fuel nozzle malfunction • Fuel nozzle is not inserted correctly. **Warning** • **The following troubleshooting flow chart contains the fuel system diagnosis and repair procedures. Read the following warnings before servicing the fuel system:** **— Fuel vapor is hazardous. It can easily ignite, causing serious injury and damage. Always keep sparks and flames away from fuel.** **— Fuel line spills and leakage are dangerous. Fuel can ignite and cause serious injuries or death and damage. Fuel can also irritate skin and eyes. To prevent this, always complete "BEFORE REPAIR PROCEDURE" and "AFTER REPAIR PROCEDURE" described in this manual.** **(See 01–14A–6 BEFORE REPAIR PROCEDURE [L3, AJ].)** **(See 01–14A–6 AFTER REPAIR PROCEDURE [L3, AJ].)** **Caution** • **Disconnecting/connecting quick release connector without cleaning it may possibly cause damage to fuel pipe and quick release connector. Always clean quick release connector joint area before disconnecting/connecting, and make sure that it is free of foreign material.**

Diagnostic procedure

STEP	INSPECTION		ACTION
1	Connect WDS or equivalent to DLC-2. Turn ignition switch to ON position (Engine off). Retrieve any DTCs. Are there any DTCs displayed?	Yes	**DTC is displayed:** Go to appropriate DTC test.
		No	**No DTC is displayed:** Go to the next step.
2	Remove fuel-filler pipe. Make sure nonreturn valve is installed properly. Inspect nonreturn valve operation. Is nonreturn valve normal?	Yes	Inspect for the following: • Improper use of fuel nozzle • Fuel is not inserted correctly. • Inspect fuel shut-off valve.
		No	**Nonreturn valve is installed improperly:** • Reinstall nonreturn valve to proper position. **Nonreturn valve does not operate properly:** • Replace nonreturn valve.
3	Verify test results. • If okay, return to diagnostic index to service any additional symptoms. • If malfunction remains, inspect related Service Bulletins and/or On-line Repair Information and perform repair or diagnosis. — If vehicle is repaired, troubleshooting completed. — If vehicle is not repaired or additional diagnostic information is not available, reprogram PCM if later calibration is available. Retest.		

NO.29 SPARK PLUG CONDITION [L3]

E6U010318881W35

29	SPARK PLUG CONDITION
DESCRIPTION	Incorrect spark plug condition
POSSIBLE CAUSE	**Note** • Inspecting spark plugs condition can determine whether problem is related to a specific cylinder or possibly all cylinders. **Wet/carbon stuck on specific plug:** • Spark—Weak, not visible • Air/fuel mixture—Excessive fuel injection volume • Compression—No compression, low compression • Faulty spark plug **Grayish white with specific plug:** • Air/fuel mixture—Insufficient fuel injection volume • Faulty spark plug **Wet/carbon is stuck on all plugs:** • Spark—Spark weak • Air/fuel mixture—Too rich • Compression—Low compression • Clogging in intake/exhaust system **Grayish white with all plugs:** • Air/fuel mixture—Too lean **Warning** **The following troubleshooting flow chart contains the fuel system diagnosis and repair procedures. Read the following warnings before servicing the fuel system:** • **Fuel vapor is hazardous. It can easily ignite, causing serious injury and damage. Always keep sparks and flames away from fuel.** • **Fuel line spills and leakage are dangerous. Fuel can ignite and cause serious injuries or death and damage. Fuel can also irritate skin and eyes. To prevent this, always complete "BEFORE REPAIR PROCEDURE" and "AFTER REPAIR PROCEDURE" described in this manual.** **(See 01–14A–6 BEFORE REPAIR PROCEDURE [L3, AJ].)** **(See 01–14A–6 AFTER REPAIR PROCEDURE [L3, AJ].)** **Caution** • **Disconnecting/connecting quick release connector without cleaning it may possibly cause damage to fuel pipe and quick release connector. Always clean quick release connector joint area before disconnecting/connecting, and make sure that it is free of foreign material.**

Diagnostic procedure

STEP	INSPECTION	RESULTS	ACTION
1	Remove all spark plugs. Inspect spark plug condition. Is spark plug condition normal?	Yes	Troubleshooting completed.
		No	**Specific plug is wet or covered with carbon:** Go to the next step. **Specific plug looks grayish white:** Go to Step 7. **All plugs are wet or covered with carbon:** Go to Step 9. **All plugs look grayish white:** Go to Step 15.
2	Is spark plug wet/covered with carbon by engine oil?	Yes	Working up and down inspect all areas related to oil.
		No	Go to the next step.
3	Inspect spark plug for the following: • Cracked insulator • Heat range • Air gap • Worn electrode Is spark plug normal?	Yes	Go to the next step.
		No	Replace spark plug.
4	Inspect compression pressure at suspected faulty cylinder. Is compression pressure correct? (See 01–10A–4 COMPRESSION INSPECTION [L3].)	Yes	Go to the next step.
		No	Repair or replace malfunctioning parts.

STEP	INSPECTION	RESULTS	ACTION
5	Install all spark plugs. Perform spark test at suspected faulty cylinder. Is strong blue spark visible? (Compare with normal cylinder.)	Yes	Go to the next step.
		No	Repair or replace malfunctioning parts.
6	Install fuel pressure gauge between fuel filter and fuel distributor. Short check connector terminal F/P to body GND using a jumper wire. Turn ignition switch to ON position (Engine off). Is fuel line pressure correct with ignition switch at ON? **Fuel line pressure** **375—450 kPa {3.9—4.5 kgf/cm^2, 55—65 psi}**	Yes	Inspect fuel injector for the following: • Open or short in injector • Leakage • Injection volume
		No	**Zero or low:** Inspect fuel pump relay and fuel pump circuit. Inspect for clogged fuel line. If okay, replace fuel pump unit. **High:** Replace fuel pump unit.
7	Inspect spark plug for the following. • Heat range • Air gap Is spark plug normal?	Yes	Go to the next step.
		No	Replace spark plug.
8	Remove suspected fuel injector. Inspect the following: • Resistance (See 01–14A–29 FUEL INJECTOR INSPECTION [L3].) • Fuel injection volume (See 01–14A–29 FUEL INJECTOR INSPECTION [L3].) Are all above items normal?	Yes	Inspect for open circuit between suspected fuel injector connector terminal and PCM connector at the following terminals: • **For #1 cylinder: 2BB** • **For #2 cylinder: 2BC** • **For #3 cylinder: 2BD** • **For #4 cylinder: 2AZ**
		No	Replace fuel injector.
9	Is air cleaner element free of restrictions?	Yes	Go to the next step.
		No	Replace air cleaner element.
10	Perform spark test. Is strong blue spark visible at each cylinder?	Yes	Go to the next step.
		No	Repair or replace malfunctioning parts.
11	Install fuel pressure gauge between fuel filter and fuel distributor. Short check connector terminal F/P to body GND using a jumper wire. Turn ignition switch to ON position (Engine off). Is fuel line pressure correct with ignition switch at ON? (See 01–14A–7 FUEL LINE PRESSURE INSPECTION [L3, AJ].) **Fuel line pressure** **375—450 kPa {3.9—4.5 kgf/cm^2, 55—65 psi}**	Yes	Go to the next step.
		No	**Zero or low:** Inspect fuel pump relay and fuel pump circuit. Inspect for clogged fuel line. If okay, replace fuel pump unit. **High:** Replace fuel pump unit.
12	Inspect the following PIDs: • ECT • O2S11 (When engine can be started) • MAF (See 01–40A–9 PCM INSPECTION [L3].) Are PIDs normal?	Yes	Go to the next step.
		No	Repair or replace malfunctioning parts.
13	Perform purge control inspection. (When engine can be started) (See 01–03A–70 Purge Control System Inspection.) Is purge control correct?	Yes	Go to the next step.
		No	Repair or replace malfunctioning parts.
14	Perform compression inspection. Is compression correct?	Yes	Inspect for clogging in exhaust system.
		No	Repair or replace malfunctioning parts.
15	When engine cannot be started, inspect intake-air system for air leakage. When engine can be started, perform intake manifold vacuum inspection. Is air sucked in from intake-air system?	Yes	Repair or replace malfunctioning part.
		No	Go to the next step.

STEP	INSPECTION	RESULTS	ACTION
16	Install fuel pressure gauge between fuel filter and fuel distributor. Short check connector terminal F/P to body GND using a jumper wire. Turn ignition switch to ON position (Engine off). Is fuel line pressure correct with ignition switch at ON? (See 01–14A–7 FUEL LINE PRESSURE INSPECTION [L3, AJ].) **Fuel line pressure** **375—450 kPa {3.9—4.5 kgf/cm^2, 55—65 psi}**	Yes	Inspect the following PIDs: • ECT • O2S11 • MAF (See 01–40A–9 PCM INSPECTION [L3].) Inspect PCM GND condition.
		No	**Zero or low:** Inspect fuel pump relay and fuel pump circuit. Inspect for clogged fuel line. If okay, replace fuel pump unit. **High:** Replace fuel pump unit.
17	Verify test results. • If okay, return to diagnostic index to service any additional symptoms. • If malfunction remains, inspect related Service Bulletins and/or On-line Repair Information and perform repair or diagnosis. — If vehicle is repaired, troubleshooting completed. — If vehicle is not repaired or additional diagnostic information is not available, reprogram PCM if later calibration is available. Retest.		

ENGINE CONTROL SYSTEM OPERATION INSPECTION [L3]

E6U010318881W36

Input Signal System Investigation Procedure

1. Find an unusual signal. (See 01–03A–62 Finding unusual signals.)
2. Locate the source. (See 01–03A–62 Locating the source of unusual signals.)
3. Repair or replace the defective part.
4. Confirm that the unusual signal has been erased.

Finding unusual signals

While referring to 01–02A–11 ON-BOARD DIAGNOSTIC TEST [L3], use the PID/DATA monitor and record function to inspect the input signal system relating to the problem.

1. Start the engine and idle the vehicle. You can assume that any signals that are out of specifications by a wid margin are unusual.
2. When recreating the problem, any sudden change in monitor input signals that is not consciously created by the driver can be judged as unusual.

Locating the source of unusual signals

Caution

- **Compare the WDS or equivalent monitor voltage with the measurement voltage using the digital measurement system function. If you use another tester, misreading may occur.**
- **When measuring voltage, attach the tester GND to the GND of the PCM that is being tested, or to the engine itself. If this is not done, the measured voltage and actual voltage may differ.**
- **After connecting the pin to a waterproof coupler, confirming continuity and measuring the voltage, inspect the waterproof connector for cracks. If there are any, use sealant to fix them. Failure to do this may result in deterioration of the harness or terminal from water damage, leading to problems with the vehicle.**

Variable resistance type 1 (TP sensor and EGR boost sensor)

Investigate the input signal system for variable resistance type 1

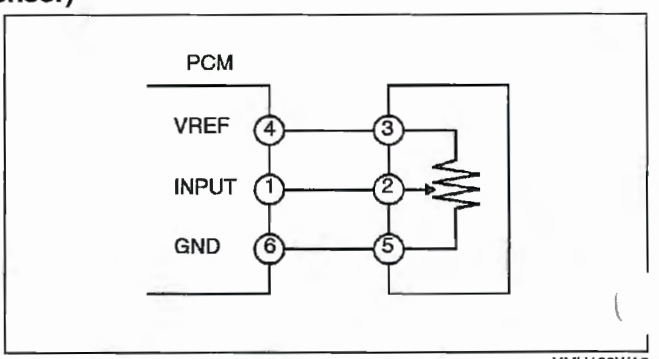

YMU103WA5

1. When an unusual signal is received, measure the #1 PCM terminal voltage.
   - If the #1 terminal voltage and the WDS or equivalent monitor voltage are the same, proceed to the next step.
   - If there is a difference of **0.5 V or more**, inspect for the following points concerning the PCM connector:
     — Female terminal opening is loose.
     — Coupler (pin holder) damage
     — Pin discoloration (blackness)
     — Harness/pin crimp is loose or disconnected.
2. Measure the #2 sensor terminal voltage.
   - If there is a **0.5 V or more** difference between the sensor and WDS or equivalent voltages, inspect the harness for open or short circuits.
   - If the sensor and WDS or equivalent voltages are the same, inspect for the following points concerning the sensor connector:
     — Female terminal opening is loose.
     — Coupler (pin holder) damage
     — Pin discoloration (blackness)
   - If there are no problems, proceed to next investigation below.

Investigate the standard power supply system for variable resistance type 1

- Confirm that the #3 terminal is at **5 V**.
  — If the measured voltage on the #3 terminal is **5 V**, inspect the following points on the sensor connector.
  — If there is no problem, inspect for the following:
    - Female terminal opening loose
    - Coupler (pin holder) damage
    - Pin discoloration (blackness)
  — If the #3 terminal measures other than **5 V**, inspect for the following:
    - Open or short circuit in harness
    - Harness/pin crimp is loose or disconnected.

Investigate the GND system for variable resistance type 1

- Confirm that terminal sensor #5 is at **0 V**.
  — If it is at **0 V**, inspect the sensor.
    - If necessary, replace the sensor.
  — If not, inspect for the following:
    - Open or short circuit in harness
    - Female terminal opening is loose causing an open or short circuit in harness
    - Coupler (pin holder) damage
    - Pin discoloration (blackness)
    - Harness/pin crimp is loose or disconnected.

Variable resistance type 2 (fuel tank level sensor and mass air flow (MAF) sensor)

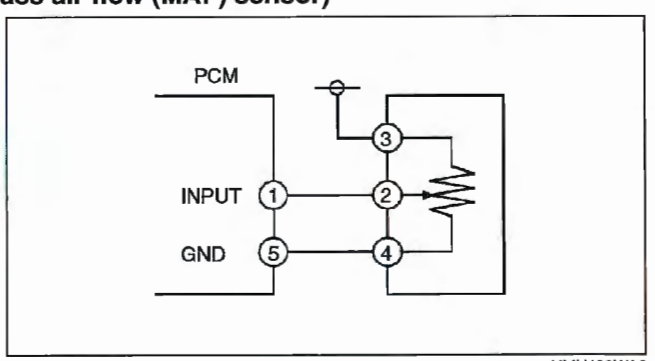

YMU103WA6

Investigate the GND system for variable resistance type 2

- Confirm that terminal sensor #4 is at **0 V**.
  — If it is at **0 V**, inspect the sensor.
    - If necessary, replace the sensor.
  — If not at **0 V**, inspect for the following:
    - Open circuit in harness
    - Female terminal opening is loose.
    - Coupler (pin holder) damage
    - Pin discoloration (blackness)
    - Harness/pin crimp is loose or disconnected.

Investigate the input signal system for variable resistance type 2

1. When an unusual signal is received, measure the #1 PCM terminal voltage.
   - If the #1 terminal voltage and the WDS or equivalent monitor voltage are the same, proceed to the next step.
   - If there is a difference of **0.5 V or more**, inspect for the following points concerning the PCM connector:
     — Female terminal opening is loose.
     — Coupler (pin holder) damage
     — Pin discoloration (blackness)
     — Harness/pin crimp is loose or disconnected.
2. Measure the #2 sensor terminal voltage.
   - If there is a **0.5 V or more** difference between the sensor and WDS or equivalent voltages, inspect the harness for open or short circuits.
   - If the sensor and WDS or equivalent voltages are the same, inspect the following points concerning the sensor connector:
     — Female terminal opening is loose.
     — Coupler (pin holder) damage
     — Pin discoloration (blackness)
     — Harness/pin crimp is loose or disconnected.
   - If there are no problems, proceed to next investigation below.

Investigate the electrical supply system for variable resistance type 2

- Confirm that the sensor #3 terminal is **B+**.
  — If the measured voltage on the #3 terminal is **B+**, inspect the following points on the sensor connector.
  — If there is no problem, inspect for the following:
    - Female terminal opening is loose.
    - Coupler (pin holder) damage
    - Pin discoloration (blackness)
  — If the #3 terminal measures other than **B+**, inspect the following:
    - Open or short circuit in harness
    - Harness/pin crimp is loose or disconnected.

Thermistor type (IAT sensor and ECT sensor)

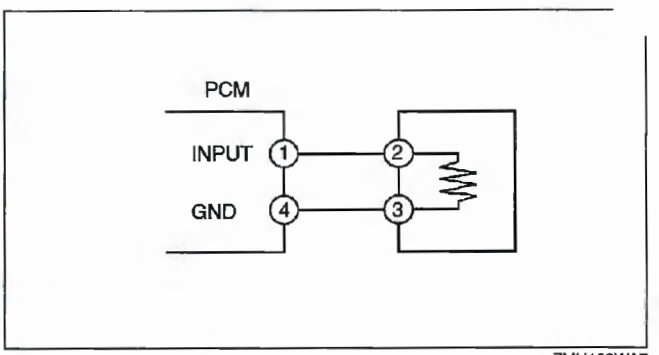

ZMU103WA7

Investigate the input signal system for thermistor type

1. When an unusual signal is received, measure the #1 PCM terminal voltage.
   - If the #1 terminal voltage and the WDS or equivalent monitor voltage are the same, proceed to the next step.
   - If there is a difference of **0.5 V or more**, inspect the following points concerning the PCM connector:
     — Female terminal opening loose
     — Coupler (pin holder) damage
     — Pin discoloration (blackness)
     — Harness/pin crimp is loose or disconnected.
2. Measure the #2 sensor terminal voltage.
   - If there is a **0.5 V or more** difference between the sensor and WDS or equivalent voltages, inspect the harness for open or short circuits.
   - If the sensor and WDS or equivalent voltages are the same, inspect the following points concerning the sensor connector:
     — Female terminal opening is loose.
     — Coupler (pin holder) damage
     — Pin discoloration (blackness)
     — Harness/pin crimp is loose or disconnected.
   - If there are no problems, proceed to next investigation below.

Investigate the GND system for thermistor type

- Confirm that terminal sensor #3 is at **0 V**.
  - — If it is at **0 V**, inspect the sensor. If necessary, replace the sensor.
  - — If not, inspect for the following:
    - Open circuit in harness
    - Female terminal opening is loose.
    - Coupler (pin holder) damage
    - Pin discoloration (blackness)
    - Harness/pin crimp is loose or disconnected.

VSS

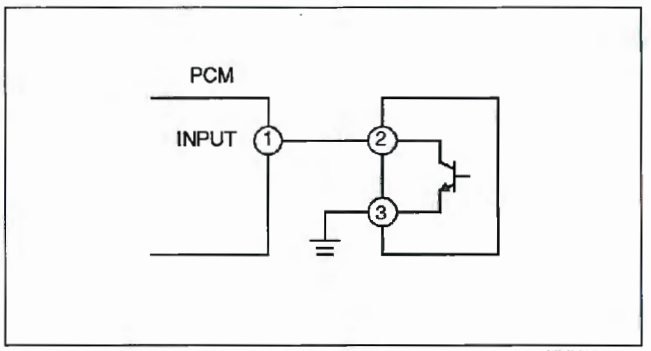

YMU103WA8

1. Measure the #1 PCM terminal voltage and confirm that it is at **0 V** or **5 V** when the ignition switch at ON and the engine at idle.
   - If it is at **0 V** or **5 V**, intermittent concern exists. (See 01–03A–7 INTERMITTENT CONCERN TROUBLESHOOTING [L3].)
   - If not, inspect the following points concerning the PCM connector.
   - If there is no problem, inspect for the following:
     - — Female terminal opening is loose.
     - — Coupler (pin holder) damage
     - — Pin discoloration (blackness)
     - — Harness/pin crimp is loose or disconnected.
2. Measure the #2 sensor terminal voltage and confirm that it is at **0 V** or **5 V** when the ignition switch at ON and the engine at idle.
   - If it is at **0 V** or **5 V**, intermittent concern exists. (See 01–03A–7 INTERMITTENT CONCERN TROUBLESHOOTING [L3].)
   - If not, inspect the following points concerning the sensor connector:
   - If there is no problem, inspect for the following.
     - — Female terminal opening is loose.
     - — Coupler (pin holder) damage
     - — Pin discoloration (blackness)
     - — Harness/pin crimp is loose or disconnected.
3. Confirm that the #3 terminal switch voltage is at **0 V**.
   - If it is at **0 V**, inspect the sensor. If necessary, replace the sensor.
     - — If necessary, replace the sensor.
   - If not, inspect for the following:
     - — Open circuit in harness
     - — Female terminal opening is loose.
     - — Coupler (pin holder) damage
     - — Pin discoloration (blackness)
     - — Harness/pin crimp is loose or disconnected.

Main Relay Operation Inspection

1. Verify that the main relay clicks when the ignition switch is turned to ON position and off.
   - If there is no operation sound, inspect the following:
     - — Main relay (See 09–21–7 RELAY INSPECTION.)
     - — Harness and connector between ignition switch and main relay terminal A.
     - — Harness and connector between PCM terminal 1Q and main relay terminal E.

Intake Manifold Vacuum Inspection

1. Verify air intake hoses are installed properly.
2. Start the engine and run it at idle.
3. Disconnect the vacuum hose between the intake manifold and purge solenoid valve from the intake manifold side.
4. Connect a vacuum gauge to the intake manifold and measure the intake manifold vacuum.
   - If not as specified, inspect the following:

Specification
More than 60 kPa {450 mmHg, 18 inHg}

Note
- Air suction can be located by engine speed change when lubricant is sprayed on the area where suction is occurring.
  - — Air suction at throttle body, intake manifold and PCV valve installation points
  - — EGR valve (stuck open)
  - — Fuel injector insulator
  - — Engine compression
    (See 01–10A–4 COMPRESSION INSPECTION [L3].)

Electronic Throttle Control System Inspection
Engine coolant temperature compensation inspection

1. Connect WDS or equivalent to the DLC-2.
2. Select the following PIDs:
   - ECT
   - IAT
   - RPM
3. Verify that the engine is cold, then start the engine.
4. Verify that the engine speed decreases as the engine warms up.
   - If the engine speed does not decrease or decreases slowly, inspect the following:
     - — ECT sensor and related harness
       (See 01–40A–35 ENGINE COOLANT TEMPERATURE (ECT) SENSOR INSPECTION [L3].)
     - — Electronic throttle body and related harness
       (See 01–13A–7 THROTTLE ACTUATOR INSPECTION [L3].)

Load compensation inspection

1. Start the engine and run it at idle.
2. Connect WDS or equivalent to the DLC-2.
3. Verify that P0506 or P0507 is not displayed.
   - If P0506, or P0507 is displayed, perform DTC inspection.
     (See 01–02A–18 DTC TABLE [L3].)
4. Select the RPM PID.

Note
- Excludes temporary idle speed drop just after the loads are turned on.

5. Verify that the engine speed is within the specification under each load condition.
   - If load condition is not as specified, inspect the following:
     - — A/C switch and related harness
       (See 07–40–33 CLIMATE CONTROL UNIT INSPECTION [L3, AJ].)
     - — Fan switch and related harness
       (See 07–40–33 CLIMATE CONTROL UNIT INSPECTION [L3, AJ].)
     - — PSP switch and related harness
       (See 01–40A–27 POWER STEERING PRESSURE (PSP) SWITCH INSPECTION [L3].)

Engine speed

Load condition		Engine speed (rpm)*1
No load		650—750
E/L operating		650—750
P/S operating		650—750
A/C operating*2	Refrigerant pressure low*3	750—850
	Refrigerant pressure high*4	750—850

*1 : Neutral or P position
*2 : A/C switch and fan switch are on.
*3 : Refrigerant pressure switch (middle pressure) is off.
*4 : Refrigerant pressure switch (middle pressure) is on.

Throttle position (TP) sweep inspection

1. Connect the WDS or equivalent to DLC-2.
2. Turn the ignition switch to ON position.
   - Verify that none of the following DTC are displayed:
     - P0122, P0123, P0222, P0223, P0638, P2100*2, P2101, P2102*2, P2103*2, P2107, P2108, P2109*1, P2112*1, P2119, P2122, P2123, P2127, P2128, P2135, P2138
       — If any one DTC is displayed, perform DTC inspection.
4. Access TP_REL PID.
5. Verify that the PID reading is within the CTP value. (See 01–40A–9 PCM INSPECTION [L3].)
   - If the PID reading is out of range, perform the following:
     — Remove the air duct from throttle valve body.
     — Verify that the throttle valve opens when accelerator pedal is depressed.
       - If the throttle valve opens, inspect the throttle position sensor and related harness.
       - If the throttle valve does not open, inspect the throttle actuator control motor and related harness.
6. Gradually depress the throttle pedal and verify that the PID reading increases lineally.
   - If the PID reading drops momentarily, inspect the following:
     — Throttle position sensor
7. Fully depress the throttle pedal and verify that the PID reading is within WOT value. (See 01–40A–9 PCM INSPECTION [L3].)
   - If the PID reading is out of range, perform the followings:
     — Remove the air duct from throttle valve body.
     — Verify that the throttle valve opens when throttle pedal is depressed.
       - If the throttle valve opens, inspect the throttle position sensor and related harness.
       - If the throttle valve does not open, inspect the throttle actuator control motor and related harness.

*1 : California emission regulation applicable ATX model
*2 : Except for California emission regulation applicable ATX model

Variable Intake Air System Operation Inspection

1. Start the engine.
2. Inspect the rod operation under the following condition:

Rod operation

Engine speed	Approx. 4,500 rpm	
	Below	Above
Shutter valve actuator	Operate	Not operate

- If the rod operation is not as specified, inspect as follows:

(1) Stop the engine.
(2) Connect WDS or equivalent to the DLC-2.
(3) Verify that DTC P0661 or P0662 is not displayed.
   - If DTC P0661 or P0662 is shown, perform DTC inspection. (See 01–02A–18 DTC TABLE [L3].)
(4) Inspect Variable intake air system control solenoid valve. (See 01–13A–8 VARIABLE INTAKE AIR SOLENOID VALVE INSPECTION [L3].)
   - If the Variable intake air solenoid valve is not okay, replace Variable intake air solenoid valve.
   - If the Variable intake air solenoid valve is okay, inspect the following:
     — Vacuum hose and vacuum chamber for looseness or damage
     — Shutter valve actuator (See 01–13A–8 VARIABLE INTAKE AIR SHUTTER VALVE ACTUATOR INSPECTION [L3].)
     — Shutter valve stuck open or closed

Variable Tumble System Operation Inspection

1. Connect the WDS or equivalent to the DLC-2.
2. Access ECT PID.
3. Verify that ECT PID is **below 60°C {140°F}**.
4. Start the engine.
5. Inspect rod operation under the following conditions:

Rod operation

Engine speed	3,750 rpm	
	Below	Above
Shutter valve actuator	Operate	Not operate

- If the rod operation is not specified, inspect as follows:

(1) Verify that DTC No. P2004, P2006, P2009 or P2010 is not displayed.
- If DTC No. P2009 or P2010 are shown, perform DTC inspection.
  (See 01–02A–18 DTC TABLE [L3].)

(2) Inspect Variable tumble solenoid valve.
(See 01–13A–9 VARIABLE TUMBLE SOLENOID VALVE INSPECTION [L3].)
- If the Variable tumble solenoid valve is not okay, replace Variable tumble solenoid valve.
- If the Variable tumble solenoid valve is okay, inspect the following:
  — Vacuum hose and vacuum chamber for looseness or damage
  — Shutter valve actuator
    (See 01–13A–9 VARIABLE TUMBLE SHUTTER VALVE ACTUATOR INSPECTION [L3].)
  — Shutter valve stuck open or closed

Fuel Injector Operation Inspection

STEP	INSPECTION	RESULTS	ACTION
1	While cranking engine, inspect for fuel injector operation sound at each cylinder using a soundscope. Is operation sound heard?	Yes	Fuel injector operation is okay.
		No	**Not heard in any cylinders:** Go to the next step. **Heard in some cylinders:** Go to Step 3.
2	Perform main relay operation inspection. Is main relay operation normal?	Yes	Inspect the following: • Fuel injector power system related wiring harness and connectors • PCM connectors • Fuel injector GND and related wiring harness and connectors
		No	Repair or replace malfunctioning parts.
3	Change fuel injector connector of not operating fuel injector and operating fuel injector. Is operation sound heard?	Yes	Go to the next step.
		No	Replace fuel injector.
4	Are wiring harness and connectors of not operation fuel injector normal? (Open or short circuit)	Yes	Inspect PCM terminal voltage of fuel injector signal.
		No	Repair or replace malfunctioning parts.

Fuel Cut Control System Inspection

1. Warm up engine and idle it.
2. Turn off the electrical loads and A/C switch.
3. Connect WDS or equivalent to the DLC-2.
4. Select RPM PID.
5. Listen for the fuel injector operation sound at all cylinders using the soundscope and monitor both PIDs while performing the following steps:
   (1) Depress the accelerator pedal and increase the engine speed to **4,000 rpm**.
   (2) Quickly release the accelerator pedal (brake pedal is not depressed) and verify that the fuel injector operation sound stops, and starts again when the engine speed drops below **1,200 rpm**.
   - If not as specified, inspect the following:
     — ECT sensor and related harness
       (See 01–40A–35 ENGINE COOLANT TEMPERATURE (ECT) SENSOR INSPECTION [L3].)
     — Neutral/clutch pedal position switch and related harness (MTX)
       (See 01–40A–25 CLUTCH PEDAL POSITION (CPP) SWITCH INSPECTION [L3].)
     — TR switch and related harness (ATX)
       (See 05–17A–12 TRANSAXLE RANGE (TR) SWITCH INSPECTION [FS5A-EL].)
       (See 05–17B–13 TRANSAXLE RANGE (TR) SWITCH INSPECTION [AW6A-EL].)

Fuel Pump Operation Inspection

Caution
- **Connecting the wrong check connector terminal may possibly cause malfunction. Carefully connect the specified terminal only.**

1. Short the check connector terminal F/P to body GND using a jumper wire.
2. Remove the fuel-filler cap.
3. Turn the ignition switch to ON position.
4. Verify that the fuel pump operation sound is heard.
   - If no operation sound heard, proceed to next step.

5. Measure voltage at harness side fuel pump connector terminal B.

Specification
B+ (Ignition switch at on)

- If the voltage is as specified, inspect the following:
  — Fuel pump continuity
  — Fuel pump GND
  — Wiring harness between fuel pump relay and PCM terminal 1H
- If not as specified, inspect the following:
  — Fuel pump relay
  — Wiring harness connector (Main relay – fuel pump relay – fuel pump.)

Fuel Pump Control System Inspection
1. Crank the engine and verify that fuel pump relay operation sound is heard.
2. If operation sound is not heard, inspect the following:
   - Fuel pump relay
   - Wiring harness and connectors (Main relay – fuel pump relay – PCM terminal 1H)

Spark Test
1. Disconnect the fuel pump relay.
2. Verify that each ignition coil and connector is connected properly.
3. Inspect the ignition system in the following procedure.

Warning
- **High voltage in the ignition system can cause strong electrical shock which can result in serious injury. Avoid direct contact to the vehicle body during the following spark test.**

STEP	INSPECTION		ACTION
1	• Disconnect the ignition coil from the spark plugs. • Remove the spark plugs. • Reconnect the spark plugs to the ignition coil. • Ground the spark plugs to engine. • Is strong blue spark visible at each cylinder while cranking?	Yes	Ignition system is normal.
		No	**Some cylinders do not spark:** • Go to the next step. **All cylinders do not spark:** • Go to Step 4.
2	• Inspect the spark plugs for damage, wear, carbon deposits and proper plug gap. • Are the spark plugs normal?	Yes	Go to the next step.
		No	Replace spark plugs, then go to Step 1.
3	• Inspect the following wiring harnesses for open or short: — Ignition coil No.1 terminal C—PCM terminal 2BA — Ignition coil No.2 terminal C—PCM terminal 2AW — Ignition coil No.3 terminal C—PCM terminal 2AX — Ignition coil No.4 terminal C—PCM terminal 2AT • Are the wiring harnesses normal?	Yes	Inspect and replace the ignition coil. (See 01–18A–3 IGNITION COIL INSPECTION [L3, AJ].)
		No	Repair or replace the malfunctioning part, then go to Step 1.
4	• Measure the voltage at terminal A in each ignition coils. • Is the voltage **B+**?	Yes	Go to the next step.
		No	Inspect power supply circuit of ignition coils.
5	• Disconnect the ignition switch connectors. • Verify that the continuity between ignition coils terminal B and GND. • Is there any continuity?	Yes	Go to the next step.
		No	Inspect GND circuit for of ignition coil.
6	• Does the PCM connector or ignition coil connectors have poor connection?	Yes	Repair or replace the connector, then go to Step 1.
		No	Go to the next step.
7	• Are the following parts normal? — CKP sensor and crankshaft pulley	Yes	Inspect for open or short circuit in wiring harness and connector of CKP sensor.
		No	Repair or replace the malfunctioning part, then go to Step 1.

EGR Control System Inspection

1. Verify that EGR valve operation (initial operation) sound is heard when the ignition switch is turned to ON position.
   - If the operation sound is not heard, connect WDS or equivalent to the DLC-2 and verify that the DTC P040 is shown. Perform DTC inspection. (See 01–02A–18 DTC TABLE [L3].)
2. Start the engine and idle it.
3. Warm up the engine to normal operating temperature.
4. Select the following PIDs:
   - ECT, RPM, SEGRP, APP1, APP2, TP_REL, VSS
5. Let the vehicle idle and verify that the SEGRP value is 0.
6. Put the vehicle in drive.
7. Depress the accelerator pedal and verify that the SEGRP value is increased.
   - If the EGR valve will increase, inspect the following:
     — EGR valve (stuck open or close)
     — Wiring harness and connectors (Main relay – EGR valve – PCM)
   - If the SEGRP value does not increase, inspect the VSS, APP1, APP2, TP_REL and ECT PIDs. (See 01–40A–9 PCM INSPECTION [L3].)
8. Stop the vehicle and verify that the SEGRP value returns to 0.

Purge Control System Inspection

1. Start the engine.
2. Disconnect the vacuum hose between the purge solenoid valve and the charcoal canister.
3. Put a finger to the purge solenoid valve and verify that there is no vacuum applied when the engine is cold.
   - If there is a vacuum, inspect the following:
     — Wiring harness and connectors (Purge solenoid valve-PCM terminal 2C)
     — Purge solenoid valve
4. Warm up the engine to the normal operating temperature.
5. Stop the engine.
6. Connect WDS or equivalent to the DLC-2 and verify that the DTC P0443 is shown. Perform DTC inspection. (See 01–02A–18 DTC TABLE [L3].)
7. Turn the ignition switch to ON position.
8. Select ECT PID.
9. Verify that the engine coolant temperature is above **60°C {140°F}**.
   - If WDS or equivalent indicates below **60°C {140°F}**, perform the ECT sensor inspection.
10. Set the vehicle on the dynamometer or chassis roller.

Warning

- **When the dynamometer or chassis roller is operating, there is a possibility that the operator may come into contact with or be caught up in the rotating parts, leading to serious injuries or death. When performing work while the dynamometer or chassis roller is operating, be careful not to contact or be caught up in any of the rotating parts.**

11. Drive vehicle at engine speed **approx. 2000 rpm** for **30 s or more.**
12. Put a finger to the purge solenoid valve and verify that there is no vacuum applied while step 2.
    - If there is no vacuum, inspect the following:
      — Wiring harness and connector (Main relay – purge solenoid valve – PCM terminal 2C)
      — Purge solenoid valve
      — MAF, APP1, APP2, TP_REL and LOAD PIDs
    - If there is vacuum, inspect the following:
      — Vacuum hose (Purge solenoid valve – charcoal canister)

A/C Cut-off Control System Inspection

1. Start the engine.
2. Turn the A/C switch and fan switch on.
3. Verify that the A/C compressor magnetic clutch actuates.
   - If it does not actuate, go to symptom troubleshooting "No.23 A/C does not work sufficiently".
4. Fully open the throttle valve and verify that the A/C compressor magnetic clutch does not actuate for **2—5 s**.
   - If it actuates, inspect as follows:
     — A/C relay
     — Open or short to GND circuit in wiring harness and connectors (Ignition switch-A/C relay-PCM terminal 1I)
     — A/C related parts
     — APP1, APP2 PIDs

Cooling Fan Control System Inspection
Cooling fan system operation (at idle)

Engine condition		Fan relay No.1	Fan relay No.2	Fan relay No.3	Fan relay No.4	Cooling fan motor No.1	Cooling fan motor No.2
.gine coolant temperature below 100°C {212°F}		OFF	OFF	OFF	OFF	OFF	OFF
Engine coolant temperature above 100°C {212°F} (until 97°C {208°F})		ON	OFF	OFF	ON	Low speed	Low speed
Engine coolant temperature above 108°C {233°F} (until 105°C {221°F})		ON	ON	ON	ON	High speed	High speed
A/C and fan switches are on.	Refrigerant pressure switch (middle pressure) is off.	ON	OFF	OFF	ON	Low speed	Low speed
	Refrigerant pressure switch (middle pressure) is on.	ON	ON	ON	OFF	High speed	Middle speed
ECT sensor malfunction		ON	ON	ON	ON	High speed	High speed

01–03A

1. Connect WDS or equivalent to DLC-2.
2. Verify that DTC P0480, P0481, and P0482 are not displayed.
   - If DTC P0480, P0481 or P0482 are displayed, perform DTC inspection.
3. Verify that ECT PID is below cooling fan operating temperature.
4. Verify that the A/C switch and fan switch are off.
5. Start the engine and idle it.
6. Verify that the cooling fans are not operating.
   - If cooling fan No.1 is operating, inspect whether cooling fan relay No.2 is stuck in the closed position.
   - If the cooling fans are operating, inspect whether cooling fan relay No.1 is stuck in the closed position.
   - If the cooling fans are operating at high speed, inspect DTC for ECT sensor (P0117, P0118).
   - If cooling fan No.1 does not operate and cooling fan No.2 is operating, inspect whether cooling fan relay No.3 is stuck in the closed.

   Start the engine.
. Verify that the cooling fans are low speed when ECT PID is **100°C {212°F} or above**.
   - If cooling fan No.1 does not operate, verify that DTC P0480 is not detected.
     — If DTC P0480 is detected, perform DTC inspection.
     — If DTC P0480 is not detected, inspect for the following:
       - Cooling fan relay No.2 is stuck in open position.
       - Open circuit in wiring harnesses or connectors or both between cooling fan relay No.2 and cooling fan motor No.1.
   - If the cooling fan No.2 does not operate, verify that DTC P0482 is not detected.
     — If DTC P0482 is detected, perform DTC inspection.
     — If DTC P0482 is not detected, inspect the following:
       - Cooling fan relay No.3 is stuck in open position.
       - Open circuit in wiring harnesses or connectors or both between cooling fan relay No.3 and cooling fan motor No.2
   - If cooling fan No.1 or cooling fan No.2 or both are operating at high speed, verify that DTC P0481 is not detected.
     — If DTC P0481 is detected, perform DTC inspection.
     — If DTC P0481 is not detected, inspect the following:
       - Cooling fan relay No.1 is stuck in closed position.
       - Cooling fan relay No.4 is stuck in closed position.
9. Turn A/C switch and fan switch on.
10. Verify that A/C is operating.
    - If A/C is not operating, inspect the following:
      — A/C switch
      — Fan switch
      — Refrigerant pressure switch
11. Verify that cooling fan No.1 is operating at high speed and cooling fan No.2 is operating other than at low speed (high or middle speed).
    - If the cooling fan relay does not operate high speed and cooling fan No.2 is operating low speed, inspect the following:
      — Cooling fan relay No.1 is stuck in open position.
      — Cooling fan relay No.4 is stuck in open position.

Variable Air Duct (VAD) Control System Operation Inspection

1. Connect WDS or equivalent to DLC-2.
2. Access ECT, TP_REL and RPM PIDs.
3. Start the engine.
4. Verify ECT PID is **70°C {158°F} or over**.
5. Inspect shutter valve operation under the following conditions.

VAD shutter valve operation

Engine speed	5,800 rpm with TP_REL PIDs 50% or over	
	Below	Above
Shutter valve	Close	Open

- If the shutter valve operation is not as specified, inspect as follows:

(1) Verify that DTC P2676 or P2677 is not displayed.
- If DTC P2676 or P2677 is shown, perform DTC inspection. (See 01–02A–18 DTC TABLE [L3].)

(2) Inspect VAD control solenoid valve. (See 01–13A–6 VARIABLE AIR DUCT (VAD) CONTROL SOLENOID VALVE INSPECTION [L3].)
- If the VAD control solenoid valve is not okay, replace VAD control solenoid valve.
- If the VAD control solenoid valve is okay, inspect the following:
  - — Vacuum hose looseness or damage
  - — Vacuum chamber cracks or damage
  - — Shutter valve actuator. (See 01–13A–5 VARIABLE AIR DUCT (VAD) SHUTTER VALVE INSPECTION [L3].)
  - — Shutter valve is stuck open or closed.

Variable Valve Timing Control System Operation Inspection

When idling cannot be continued

1. Remove the oil control valve (OCV) and verify that the spool valve is at maximum retard position.
2. Connect the oil control valve (OCV).
3. Turn the ignition switch to ON position.
4. Verify that the spool valve is at maximum retard position.
   - If the spool valve is stuck in the advance direction, inspect for the following:
     - — Short circuit in harnesses or connectors between the oil control valve (OCV) and the PCM.
5. Inspect the variable timing actuator.

When idling can be continued

1. Disconnect oil control valve (OCV) connector.
2. Warm up the engine and idle it.
3. Apply battery voltage to the oil control valve (OCV) and verify that the engine idles roughly or stalls.
   - If the engine idles roughly or stalls, inspect the timing chain component (valve timing deviation).
   - If the engine does not idle roughly or stalls, go to the next step.
4. Remove the oil control valve (OCV) and perform spool valve operation inspection. (See 01–10A–32 OIL CONTROL VALVE (OCV) INSPECTION [L3].)
   - If not as specified, inspect the following:
     - — Oil control valve (OCV)
     - — Harnesses and connectors between oil control valve (OCV) and PCM open or short.
   - If as specified, inspect the following hydraulic passages for clogging or leakage or both:
     - — Oil pressure switch – oil control valve (OCV)
     - — Oil control valve (OCV) – camshaft
     - — Camshaft internal passage
5. If they are okay, replace the camshaft pulley (with built-in variable valve timing actuator).

Evaporative Emission (EVAP) System Leak Inspection

- To verify that the problem has been fixed properly after repairs, the run drive cycle or EVAP system leak inspection must be performed.

EVAP system leak inspection using the WDS or equivalent

Note

EVAP system test outline

- The EVAP system test, which can substituted for the run drive cycle as an EVAP control system repair confirmation method, can be done while operating the WDS in the KOEO (Key On Engine Off) condition instead of actually driving the vehicle.

EVAP system test description

- The EVAP system test finds gas leaks in the system using the PCM to monitor changes in the air pump load current of the EVAP system leak detection pump. This test starts after sending an on-demand test signal from the WDS to the PCM. The PCM controls the air pump and change-over-valve operation and also stores the load current of the air pump as follows:
  i. The PCM commands turn the air pump on and retrieve the air pump load current value (LDP_MON PID) as a reference current (LDP_REF PID).
  ii. After retrieving a reference current value, the PCM commands the change-over-valve to open, then captures the air pump load current value (LDP_MON PID) as idle current (LDP_IDL PID). The EVAP system will be pressurized from this phase.
  iii. The PCM continues to monitor the air pump load current value (LDP_MON PID) until the end of the test.
- You can confirm whether any EVAP gas leak occurred or not by reading the test results.

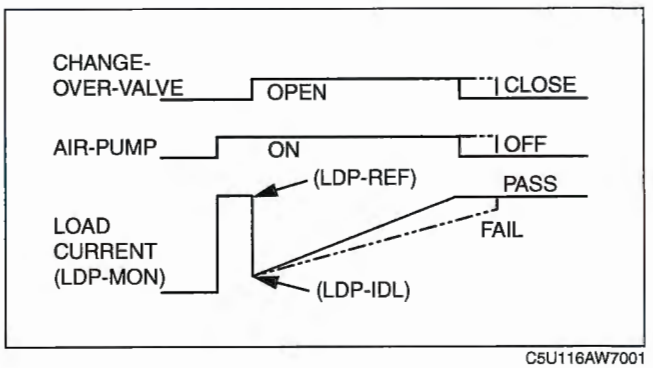

C5U116AW7001

EVAP system malfunction judgment

- The PCM calculates the stored air pump load current value and send the results to the WDS as DTCs:

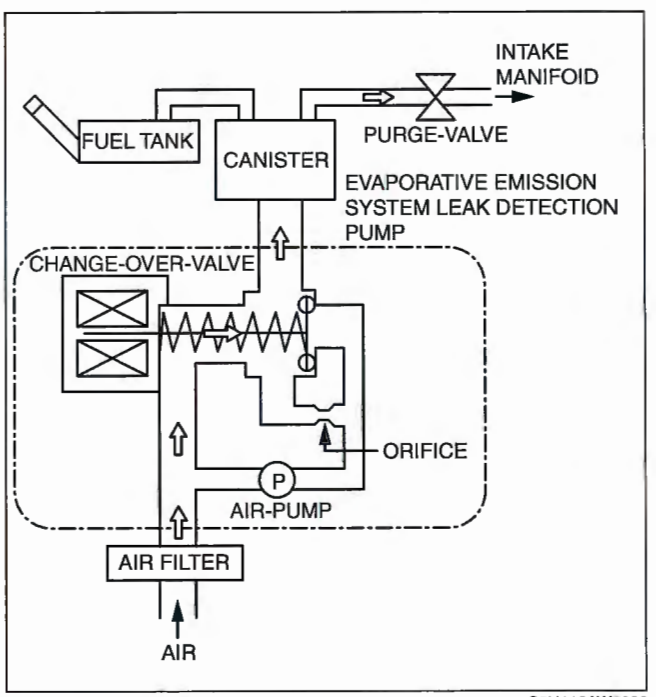

C5U116AW7002

DTC No.	Condition
P0442	EVAP control system leak detected (small leak)
P0446	Change over valve (COV) (EVAP system leak detection pump) stuck close
P0455	EVAP control system leak detected (gross leak)
P0456	EVAP control system leak detected (very small leak)
P2401	EVAP system leak detection pump motor circuit low
P2402	EVAP system leak detection pump motor circuit high
P2404	EVAP system leak detection pump sensor circuit malfunction
P2405	EVAP system leak detection pump sensor circuit low input
P2407	EVAP system leak detection pump sensor circuit intermittent

Evaporative system test procedure

1. Select the EVAP system test from the Toolbox on the WDS display and follow the instructions.
2. Verify that all of the following PIDs are within the specifications at the pre-test confirmation screen.

Note

- To successfully perform this procedure, all PIDs must be within the following specifications before proceeding to the next step.
- The PCM will cancel the EVAP system test if the VPWR PID value falls lower than **11.0 V** during the test.

Specification

PID	PID Range
BARO	72.2 kPa {543 mmHg, 21.3 inHg} or more
FLI	15—85%
IAT	5—45 °C {41—113 °F}
VPWR	11.0 V or more

3. Start the engine.
4. Drive the vehicle or let the engine idle more than **20 min**.
5. Turn ignition switch off, then turn it to the ON position again (Key On Engine Off).
6. Press the tick icon to start the test.
7. Verify that no DTCs present after the completion of the test.

- If any test result is indicated with red, diagnose the problem using the following DTC troubleshooting procedure or component inspection procedure.
- If any DTCs are detected, diagnose the problem using the appropriate DTC troubleshooting procedure.

EVAP system leak inspection using leak tester

1. Perform the following **SST** (EVAP System Tester 134-01049) self-test:

Note

- If the tester does not work correctly during the self-test, refer to the tester operators manual for more detailed self-test procedure.

(1) Verify that the control valve on the panel is in the HOLD position then open the nitrogen bottle valve.
(2) Connect the vehicle interface hose (part of the **SST**) to the SELF TEST port located on the control panel. Hand tighten the fitting. (Do not overtighten.)
(3) Turn the control valve to the TEST position.
(4) The gauge should read **331—381 mm {13—15 in}** of water.
  - If the gauge is not reading in this range, adjust the pressure by turning the black knob on the low pressure regulator at the nitrogen bottle.
(5) Turn the control valve to the HOLD position.
(6) Verify that the gauge holds pressure and that the flow meter reads no flow.
  - If there is no drop in pressure and no flow, the tester passes the self-test.
  - If the gauge leaks down, refer to the operators manual.

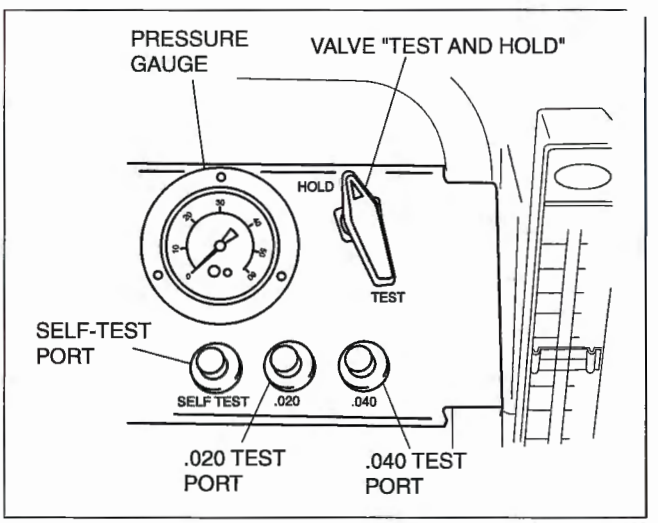

C5U116AW7003

2. Connect the **SST** to the vehicle.
   (1) Verify that the control valve on the panel is in the HOLD position then open the nitrogen bottle valve.
   (2) Remove the fuel-filler cap from the vehicle.
   - If the fuel-filler cap is not a MAZDA part or equivalent, replace it.

   (3) Connect the receiver assembly (**SST**: 134-01059) to the vehicle cap test hose assembly (part of **SST**) and the fuel-filler cap from the vehicle.
   (4) Connect the cap adaptor (**SST**: 134-01058) to the vehicle cap test hose assembly (part of the **SST**) and to the fuel-filler neck.
   (5) Connect the vehicle interface hose (part of the **SST**) to the center fitting of the vehicle cap test hose assembly (part of the **SST**).

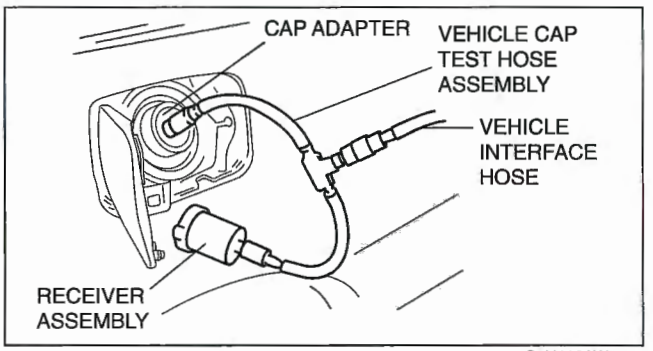

C5U116AW7004

3. Connect the WDS or equivalent to the DLC-2.
4. Turn the ignition switch to the ON position (Engine off).
5. Request the PCM on-board device control (Mode 08) using the WDS or equivalent to close the change-over valve (COV) in the EVAP system leak detection pump.

Note
- The COV is closed for **10 min** unless the following any actions are done:
  — The engine is started.
  — The ignition switch is turned off position.

6. Make sure the control valve on the 134-01049 is in the HOLD position and that the valve on the cylinder of nitrogen gas is open.
7. Turn the control valve to the open position and let the system fill. You should note a drop in the gauge pressure along with the flow meter being pegged at maximum flow for several minutes depending on how full or empty the fuel tank is, and how long it takes to completely fill and pressurize the evaporative emissions system hoses. If the gauge and the flow meter do not settle to a measurable level after **2—3 min**, then refer to the Mazda Workshop Manual to verify that the cut or vent valve is properly closed.
9. Verify the pressure gauge and flow meter reading to determine if there is an evaporative emissions leak:

NO EVAPORATIVE LEAK:
- The flow meter registers "zero flow" and the pressure gauge returns to the pre-set pressure of **356 mm {14 in}** of water (H2O).

EVAPORATIVE LEAK:
- The pressure does not return to the preset level of **356 mm {14 in}** of water (H2O) when measuring the flow. See "SETTING LEAK STANDARD FOR TESTING" (.020 to. 040 inch H2O) of the Evaporative Emissions Tester operators manual (134-01067).

Note
- Turn the control valve to the HOLD position then disconnect the **SST**.

01–03B SYMPTOM TROUBLESHOOTING [ENGINE CONTROL SYSTEM (L3 WITH TC)]

.GINE CONTROL SYSTEM WIRING DIAGRAM [L3 WITH TC] 01–03B–2
CONTROL SYSTEM DEVICE AND CONTROL RELATIONSHIP CHART [L3 WITH TC] 01–03B–4
FOREWORD [L3 WITH TC] 01–03B–6
INTERMITTENT CONCERN TROUBLESHOOTING [L3 WITH TC] 01–03B–6
Vibration Method 01–03B–6
Water Sprinkling Method 01–03B–8
ENGINE SYMPTOM TROUBLESHOOTING [L3 WITH TC] 01–03B–9
QUICK DIAGNOSTIC CHART [L3 WITH TC] 01–03B–10
NO.1 MELTING OF MAIN OR OTHER FUSES [L3 WITH TC] 01–03B–17
NO.2 MIL ILLUMINATES [L3 WITH TC] 01–03B–18
NO.3 WILL NOT CRANK [L3 WITH TC] 01–03B–18
NO.4 HARD TO START/LONG CRANK/ ERRATIC START/ERRATIC CRANK [L3 WITH TC] 01–03B–21
NO.5 ENGINE STALLS-AFTER START/ AT IDLE [L3 WITH TC] 01–03B–24
.6 CRANKS NORMALLY BUT WILL .OT START [L3 WITH TC] 01–03B–29
NO.7 SLOW RETURN TO IDLE [L3 WITH TC] 01–03B–33
NO.8 ENGINE RUNS ROUGH/ ROLLING IDLE [L3 WITH TC] 01–03B–36
NO.9 FAST IDLE/RUNS ON [L3 WITH TC] 01–03B–39
NO.10 LOW IDLE/STALLS DURING DECELERATION [L3 WITH TC] 01–03B–41
NO.11 ENGINE STALLS/QUITS, ENGINE RUNS ROUGH, MISSES, BUCK/JERK, HESITATION/STUMBLE, SURGES [L3 WITH TC] 01–03B–43
NO.12 LACK/LOSS OF POWER-ACCELERATION/CRUISE [L3 WITH TC] 01–03B–48
NO.13 KNOCKING/PINGING [L3 WITH TC] 01–03B–52
NO.14 POOR FUEL ECONOMY [L3 WITH TC] 01–03B–55
NO.15 EMISSION COMPLIANCE [L3 WITH TC] 01–03B–58
NO.16 HIGH OIL CONSUMPTION/LEAKAGE [L3 WITH TC] 01–03B–61
NO.17 COOLING SYSTEM CONCERNS-OVERHEATING 3 WITH TC] 01–03B–61
NO.18 COOLING SYSTEM CONCERNS-RUNS COLD [L3 WITH TC] 01–03B–63
NO.19 EXCESSIVE BLACK SMOKE [L3 WITH TC] 01–03B–64
NO.20 FUEL ODOR (IN ENGINE COMPARTMENT) [L3 WITH TC] 01–03B–67
NO.21 ENGINE NOISE [L3 WITH TC] 01–03B–68
NO.22 VIBRATION CONCERNS (ENGINE) [L3 WITH TC] 01–03B–70
NO.23 A/C DOES NOT WORK SUFFICIENTLY [L3 WITH TC] 01–03B–70
NO.24 A/C IS ALWAYS ON OR A/C COMPRESSOR RUNS CONTINUOUSLY [L3 WITH TC] 01–03B–71
NO.25 A/C IS NOT CUT OFF UNDER WIDE OPEN THROTTLE CONDITIONS [L3 WITH TC] 01–03B–72
NO.26 EXHAUST SULPHUR SMELL [L3 WITH TC] 01–03B–72
NO.27 FUEL REFILL CONCERNS [L3 WITH TC] 01–03B–74
NO.28 FUEL FILLING SHUT OFF ISSUES [L3 WITH TC] 01–03B–75
NO.29 CONSTANT VOLTAGE [L3 WITH TC] 01–03B–76
NO.30 SPARK PLUG CONDITION [L3 WITH TC] 01–03B–78
ENGINE CONTROL SYSTEM OPERATION INSPECTION [L3 WITH TC] 01–03B–80
Input Signal System Investigation Procedure 01–03B–80
Main Relay Operation Inspection 01–03B–84
Intake Manifold Vacuum Inspection 01–03B–84
Electronic Throttle Control System Inspection 01–03B–85
Variable Swirl System Operation Inspection 01–03B–86
Fuel Injector Operation Inspection 01–03B–87
Fuel Cut Control System Inspection 01–03B–88
Fuel Pump Operation Inspection 01–03B–88
Fuel Pump Control System Inspection 01–03B–89
Fuel Pump Speed Control Inspection 01–03B–89
Spark Test 01–03B–90
EGR Control System Inspection 01–03B–90
Purge Control System Inspection 01–03B–91
A/C Cut-off Control System Inspection 01–03B–92
Cooling Fan Control System Inspection 01–03B–92
Wastegate Control System Operation Inspection 01–03B–93
Variable Valve Timing Control System Operation Inspection 01–03B–93
Evaporative Emission (EVAP) System Leak Inspection 01–03B–94

ENGINE CONTROL SYSTEM WIRING DIAGRAM [L3 WITH TC]

E6U010318881W74

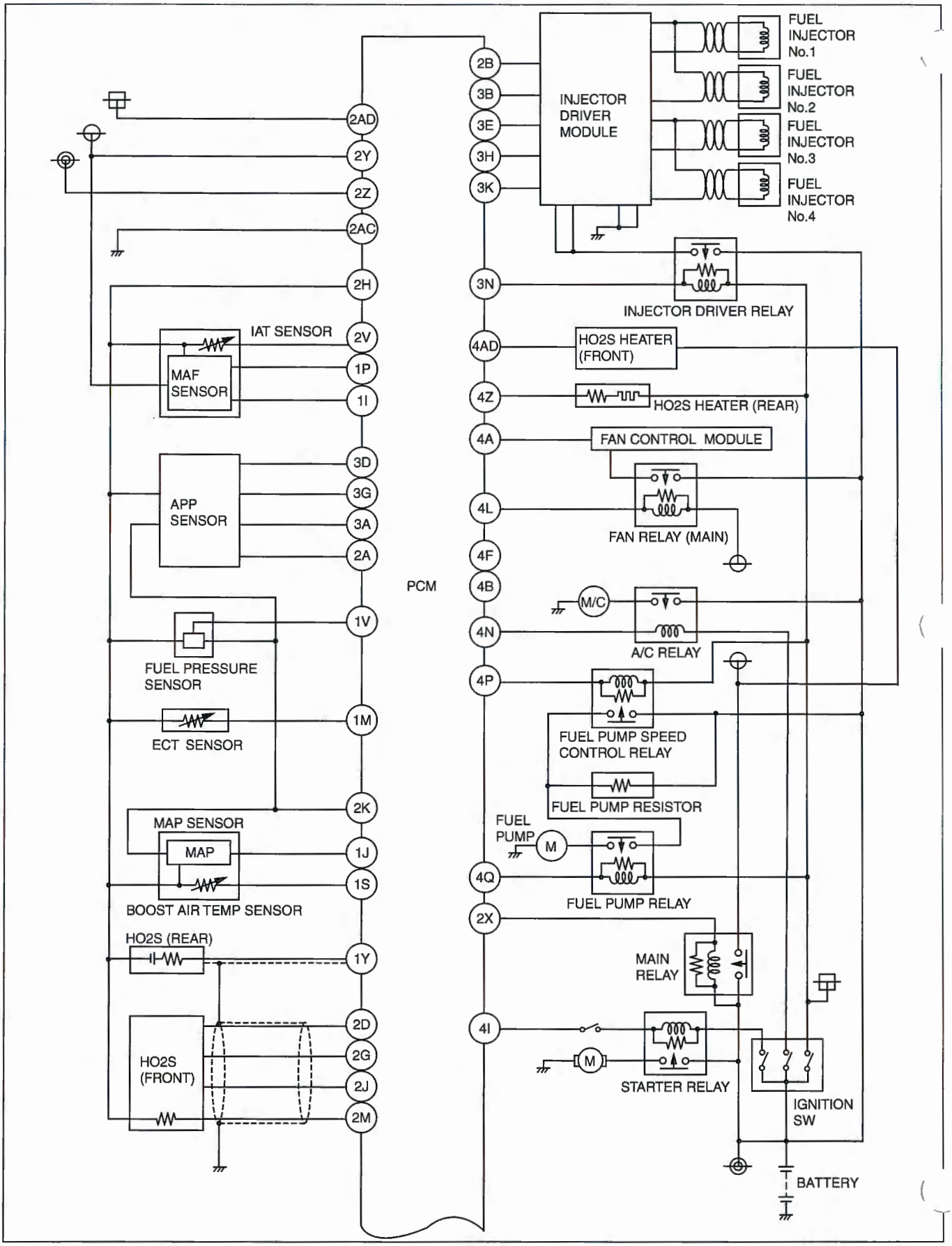

E6U103ZWC001

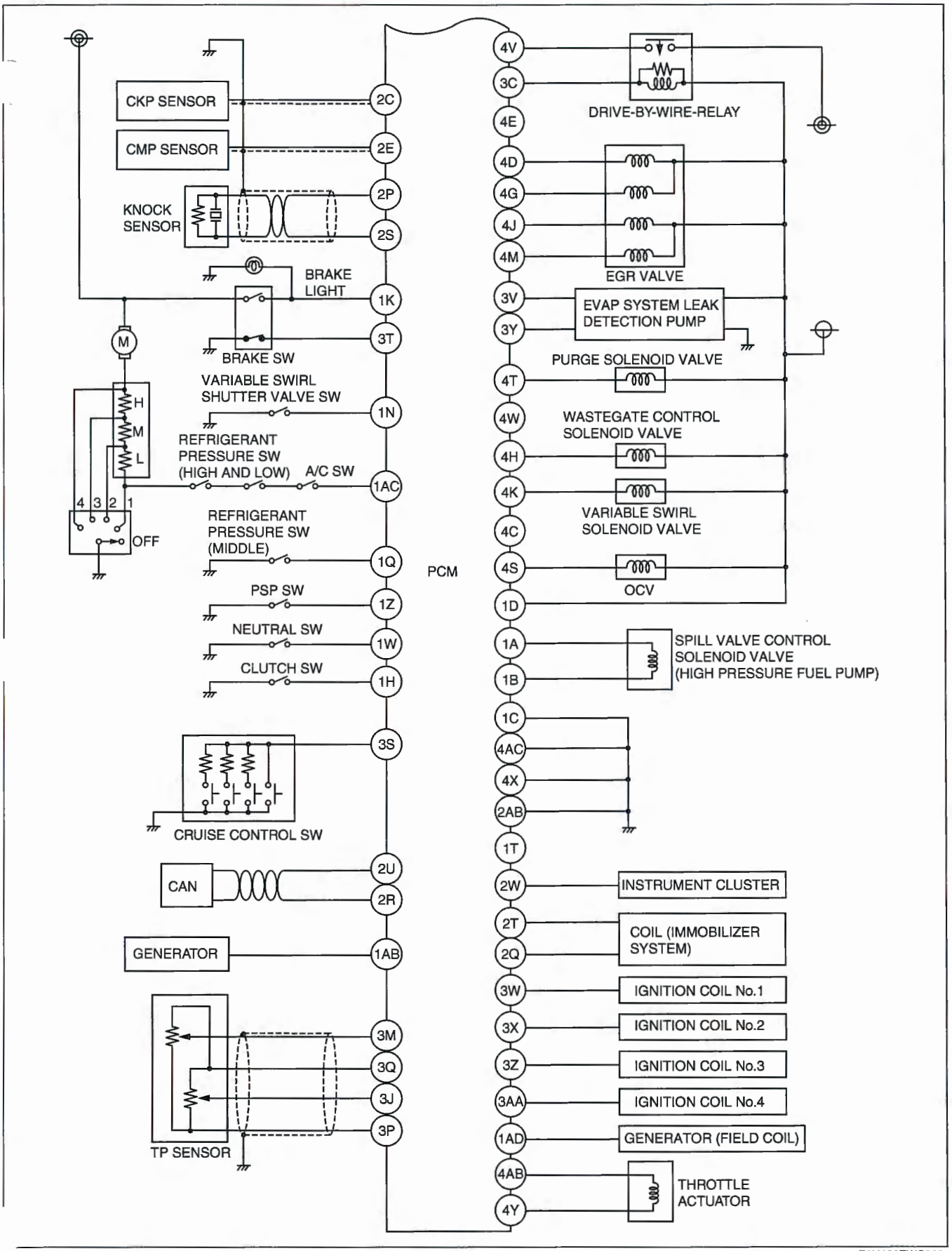

E6U103ZWC002

CONTROL SYSTEM DEVICE AND CONTROL RELATIONSHIP CHART [L3 WITH TC]

E6U010318881W75

X: Applied

Item	ELECTRONIC THROTTLE CONTROL	IAC	VARIABLE SWIRL CONTROL	VARIABLE VALVE TIMING CONTROL	FUEL INJECTION CONTROL	FUEL PUMP CONTROL	ESA CONTROL	EGR CONTROL	EVAPORATIVE PURGE CONTROL	HO2S HEATER CONTROL	A/C CUT-OFF CONTROL	ELECTRICAL FAN CONTROL	STARTER CUT-OFF CONTROL	GENERATOR CONTROL	CRUISE CONTROL	CAN	HIGH PRESSURE FUEL PUMP CONTROL	WASTEGATE CONTROL	FUEL PUMP SPEED CONTROL
Input device																			
IAT sensor	X	X			X		X		X					X			X	X	X
MAF sensor	X	X	X	X	X		X	X	X	X		X					X	X	X
TP sensor No.1, No.2	X	X			X		X	X			X							X	X
APP sensor No.1, No.2	X	X	X	X	X		X	X	X		X	X							
MAP sensor	X	X			X				X		X								
ECT sensor	X	X	X	X	X		X	X	X	X	X	X		X					X
CMP sensor		X		X	X		X										X		
CKP sensor	X	X	X	X	X	X	X	X	X	X	X	X		X			X	X	X
KS							X												
HO2S (front, rear)					X				X										X
BARO sensor	X	X			X				X			X						X	X
Neutral switch	X	X			X		X	X	X		X				X			X	
CPP switch	X	X			X		X	X	X		X				X			X	
Brake switch		X			X		X								X				
Instrument cluster (A/C on request signal)		X									X	X							
Refrigerant pressure switch (low pressure switch, high pressure switch)		X									X	X							
Refrigerant pressure switch (medium pressure switch)		X										X							
Battery	X			X		X	X	X	X	X				X			X	X	X
Generator (Terminal P: starter coil)		X												X					
Vehicle speed signal	X	X			X		X	X				X		X	X	X			
Cruise control switch															X				
Instrument cluster (CAN signal)	X	X			X		X			X			X			X			
Ignition switch				X	X	X	X	X		X		X							
Fuel pressure sensor	X				X	X											X		
Boost air temperature sensor		X			X		X	X									X		

Item	ELECTRONIC THROTTLE CONTROL	IAC	VARIABLE SWIRL CONTROL	VARIABLE VALVE TIMING CONTROL	FUEL INJECTION CONTROL	FUEL PUMP CONTROL	ESA CONTROL	EGR CONTROL	EVAPORATIVE PURGE CONTROL	HO2S HEATER CONTROL	A/C CUT-OFF CONTROL	ELECTRICAL FAN CONTROL	STARTER CUT-OFF CONTROL	GENERATOR CONTROL	CRUISE CONTROL	CAN	HIGH PRESSURE FUEL PUMP CONTROL	WASTEGATE CONTROL	FUEL PUMP SPEED CONTROL
Output device																			
Throttle actuator	X	X													X				
Drive-by-wire-relay	X																		
Variable swirl shutter valve actuator			X																
OCV (L3)				X															
Injector driver module					X														
Fuel pump relay						X													
Ignition coil							X												
EGR valve								X											
Purge solenoid valve									X										
)2S heater (front, rear)										X									
A/C relay											X								
Fan control module												X							
Starter relay													X	X					
Generator (Terminal D: field coil)														X					
ABS HU/CM (With ABS) (CAN signal)																X			
Instrument cluster (CAN signal)																X			
Spill valve control solenoid valve																	X		
Wastegate control solenoid valve																		X	
Fuel pump speed control relay																			X

FOREWORD [L3 WITH TC]

E6U010318881W76

- When the customer reports a vehicle malfunction, check the malfunction indicator lamp (MIL) indication and diagnostic trouble code (DTC), then diagnose the malfunction according to the following flowchart:
  - — If a DTC exists, diagnose the applicable DTC inspection. (See 01–02B–14 DTC TABLE [L3 WITH TC].)
  - — If no DTC exists and the MIL does not illuminate or flash, diagnose the applicable symptom troubleshooting. (See 01–03B–10 QUICK DIAGNOSTIC CHART [L3 WITH TC].)

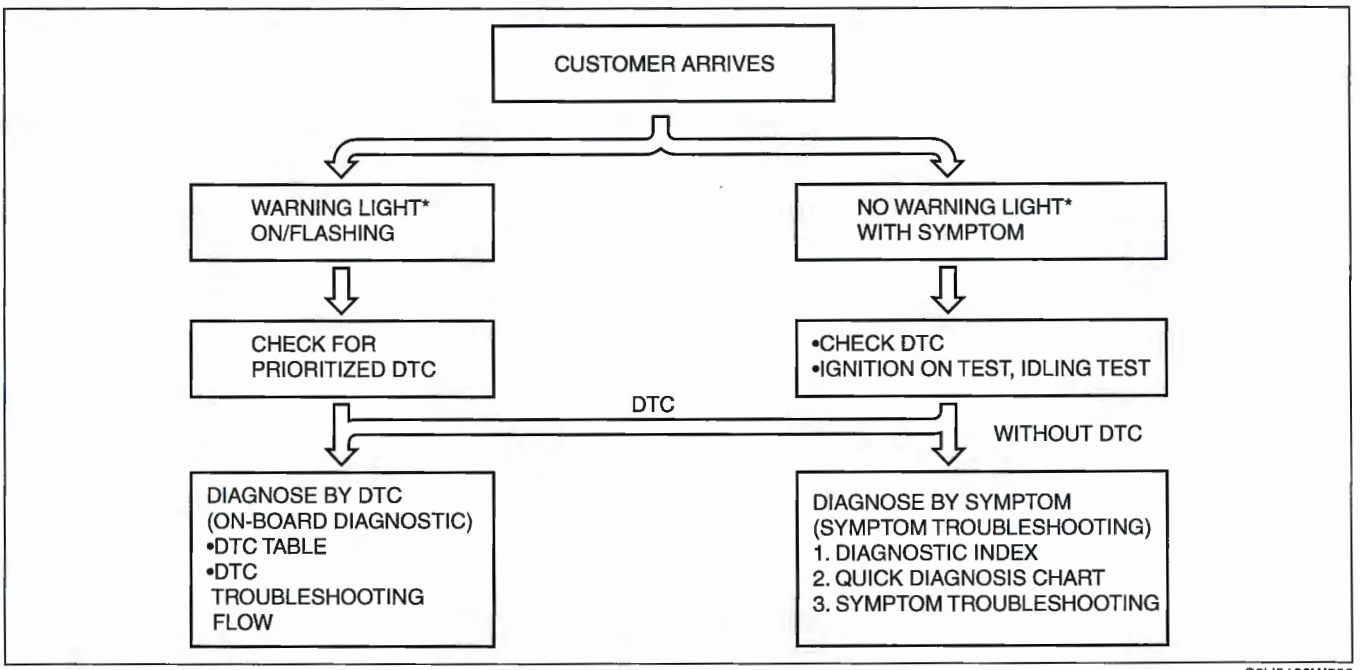

C6U0103W500

*: Malfunction Indicator Lamp (MIL), Generator Warning Light, Security Light

INTERMITTENT CONCERN TROUBLESHOOTING [L3 WITH TC]

E6U010318881W77

Vibration Method

- If a malfunction occurs or becomes worse while driving on a rough road or when the engine is vibrating, perform the steps below.

Note

- There are several reasons why the vehicle or engine vibration could cause an electrical malfunction. Check the following:
  - — Connectors are not fully seated.
  - — Wiring harnesses do not have full play.
  - — Wires laying across brackets or moving parts.
  - — Wires routed too close to hot parts.
- An improperly routed, improperly clamped, or loose harness can cause a wiring harness to become pinched between parts.
- The connector joints, points of vibration, and places where the wiring harnesses pass through the firewall and body panels are the major areas to be checked.

Inspection Method for Switch Connectors or Wires

1. Connect the WDS or equivalent to the DLC-2.
2. Turn the ignition switch to the ON position (Engine off).

Note

- If engine starts and runs, perform the following steps during idle.

3. Access the PIDs for the switch you are inspecting.
4. Turn the switch on manually.

5. Slightly shake each connector or wiring harness vertically and horizontally while monitoring the PID.
   - If the PID value is unstable, check for a poor connection.

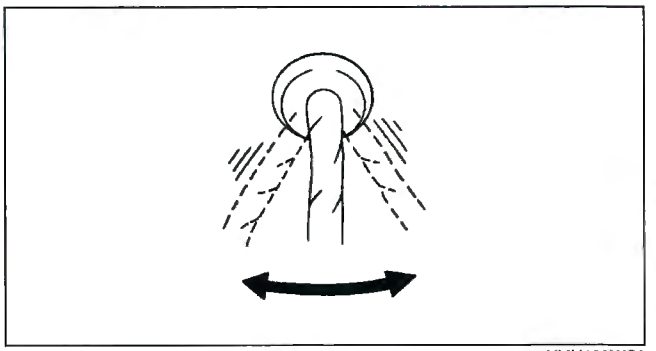

YMU103WC0

Inspection Method for Sensor Connectors or Wires

1. Connect the WDS or equivalent to the DLC-2.
2. Turn the ignition switch to the ON position (Engine off).

Note
- If the engine starts and runs, perform the following steps during idling.

3. Access the PIDs for the switch you are inspecting.
4. Slightly shake each connector or wiring harness vertically and horizontally while monitoring the PID.
   - If the PID value is unstable, check for poor connection.

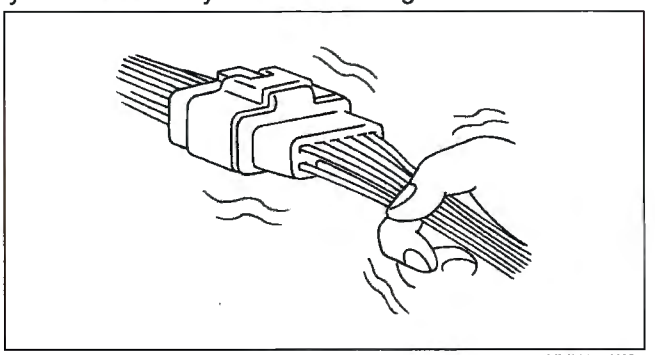

YMU103WC1

Inspection Method for Sensors

1. Connect the WDS or equivalent to the DLC-2.
2. Turn the ignition switch to the ON position (Engine off).

Note
- If the engine starts and runs, perform the following steps during idle.

3. Access the PIDs for the switch you are inspecting.
4. Shake the sensor slightly with your finger.
   - If the PID value is unstable or a malfunction occurs, check for a poor connection or a poorly mounted sensor or both.

Inspection Method for Actuators or Relays

1. Connect the WDS or equivalent to the DLC-2.
2. Turn the ignition switch to the ON position (Engine off).

Note
- If engine starts and runs, perform the following steps during idling.

3. Prepare the output state control function for actuators or relays that you are inspecting.

4. Shake the actuator or relay with your finger for 3 s after the output state control function is activated.
   - If a variable click sound is heard, check for a poor connection or a poorly mounted actuator or both, or the relay.

Note
- Shake the relays too strongly may result in open circuits.

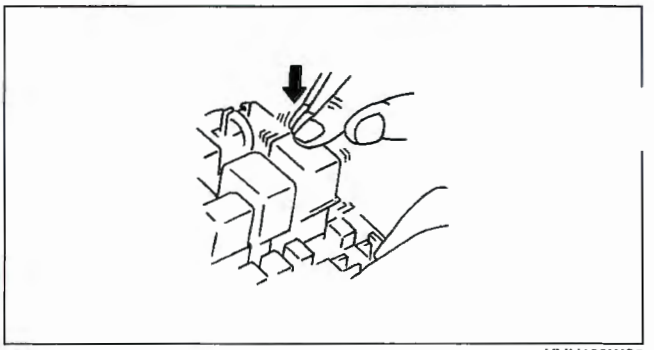

YMU103WC2

Water Sprinkling Method

If a malfunction occurs only during high humidity or rainy/snowy weather, perform the following steps:

Caution
- **Indirectly change the temperature and humidity by spraying water onto the front of the radiator.**
- **If a vehicle is subject to water leakage, the leakage may damage the control module. When testing a vehicle with a water leakage problem, special caution must be used.**

1. Connect the WDS or equivalent to the DLC-2 if you are inspecting sensors or switches.
2. Turn the ignition switch to the ON position (Engine off).

Note
- If the engine starts and runs, perform the following steps is idling.

3. Access the PIDs for the sensor or the switch if you are inspecting sensors or switches.
4. If you are inspecting the switch, turn it on manually.
5. Spray water onto the vehicle or run it through a car wash.
   - If the PID value is unstable or a malfunction occurs, repair or replace parts if necessary.

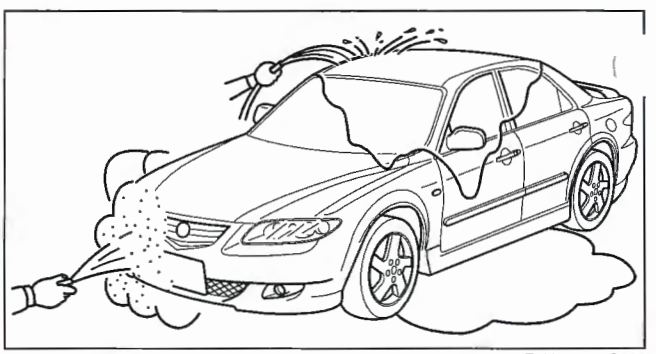

E6U103ZWC003

ENGINE SYMPTOM TROUBLESHOOTING [L3 WITH TC]

E6U010318881W78

- Verify malfunction symptoms using the following diagnostic index, then go to the appropriate troubleshooting chart.

Diagnostic Index

No.	TROUBLESHOOTING ITEM		DESCRIPTION
1	Melting of main or other fuses		—
2	MIL illuminates		MIL is illuminated.
3	Will not crank		Starter does not work.
4	Hard to start/long crank/erratic start/erratic crank		Starter cranks engine at normal speed but engine requires excessive cranking time before starting.
5	Engine stalls.	After start/at idle	Engine stops unexpectedly at idle or after start or both.
6	Cranks normally but will not start		Starter cranks engine at normal speed but engine will not run.
7	Slow return to idle		Engine takes more time than normal to return to idle speed.
8	Engine runs rough/rolling idle		Engine speed fluctuates between specified idle speed and lower speed and engine shakes excessively.
9	Fast idle/runs on		Engine speed continues at fast idle after warm-up. Engine runs after ignition switch is turned off.
10	Low idle/stalls during deceleration		Engine stops unexpectedly at beginning of deceleration or recovery from deceleration.
11	Engine stalls/quits.	Acceleration/cruise	Engine stops unexpectedly at beginning of acceleration or during acceleration. Engine stops unexpectedly while cruising.
	Engine runs rough.	Acceleration/cruise	Engine speed fluctuates during acceleration or cruising.
	Misses	Acceleration/cruise	Engine misses during acceleration or cruising.
	Buck/jerk	Acceleration/cruise/ deceleration	Vehicle bucks/jerks during acceleration, cruising, or deceleration.
	Hesitation/stumble	Acceleration	Momentary pause at beginning of acceleration or during acceleration
	Surges	Acceleration/cruise	Momentary minor irregularity in engine output
12	Lack/loss of power	Acceleration/cruise	Performance is poor under load. (e.g., power down when climbing hills)
13	Knocking/pinging	Acceleration/cruise	Sound is produced when air/fuel mixture is ignited by something other than spark plug. (e.g., hot spot in combustion chamber)
14	Poor fuel economy		Fuel economy is unsatisfactory.
15	Emission compliance		Fails emissions test.
16	High oil consumption/leakage		Oil consumption is excessive.
17	Cooling system concerns	Overheating	Engine runs at higher than normal temperature/overheats.
18	Cooling system concerns	Runs cold	Engine does not reach normal operating temperature.
19	Exhaust smoke		Blue, black, or white smoke from exhaust system
20	Fuel odor (in engine compartment)		Gasoline fuel smell or visible leakage
21	Engine noise		Engine noise from under hood
22	Vibration concerns (engine)		Vibration from under hood or driveline
23	A/C does not work sufficiently.		A/C compressor magnetic clutch does not engage when A/C is turned on.
24	A/C is always on or A/C compressor runs continuously.		A/C compressor magnetic clutch does not disengage.
25	A/C is not cut off under WOT conditions.		A/C compressor magnetic clutch does not disengage under WOT.
26	Exhaust sulphur smell		Rotten egg smell (sulphur) from exhaust
27	Fuel refill concerns		Fuel tank does not fill smoothly.
28	Fuel filling shut off issues		Fuel does not shut off properly.
29	Constant voltage		Incorrect constant voltage
30	Spark plug condition		Incorrect spark plug condition

QUICK DIAGNOSTIC CHART [L3 WITH TC]

E6U010318881W79

X: Applied

	Troubleshooting item / Possible factor		Starter motor malfunction (Mechanical or electrical)	Starter circuit including ignition switch is open	Starter interlock switch malfunction	Improper engine oil level	Low or dead battery	Charging system malfunction	Improper engine compression	Improper dipstick	Base engine malfunction	Flywheel is seized	Improper tension or damaged drive belts	Improper engine coolant level	Water and anti-freeze mixture is improper	Cooling system malfunction (Radiator, hoses,overflow system, thermostat, etc.)	Cooling fan system malfunction
1	Melting of main or other fuses																
2	MIL illuminates																
3	Will not crank		X	X	X		X	X			X	X					
4	Hard start/long crank/erratic start/erratic crank		X						X		X						
5	Engine stalls	After start/at idle							X								
6	Cranks normally but will not start								X								
7	Slow return to idle															X	X
8	Engine runs rough/rolling idle								X								
9	Fast/idle runs on																
10	Low idle/stalls during deceleration								X								
11	Engine stalls/quits	Acceleration/cruise							X								
	Engine runs rough	Acceleration/cruise							X								
	Misses	Acceleration/cruise							X								
	Buck/jerk	Acceleration/cruise/ deceleration							X								
	Hesitation/stumble	Acceleration/cruise							X								
	Surges	Acceleration/cruise							X								
12	Lack/loss of power	Acceleration/cruise							X								
13	Knocking/pinging	Acceleration/cruise							X								X
14	Poor fuel economy								X					X		X	X
15	Emission compliance								X		X					X	
16	High oil consumption/leakage									X	X						
17	Cooling system concerns	Overheating											X	X	X	X	X
18	Cooling system concerns	Runs cold														X	X
19	Exhaust smoke								X		X					X	
20	Fuel odor (in engine compartment)																
21	Engine noise												X				
22	Vibration concerns (engine)																
23	A/C does not work sufficiency																
24	A/C always on or A/C compressor runs continuously.																
25	A/C does not cut off under wide open throttle																
26	Exhaust sulphur smell																
27	Fuel refill concerns																
28	Fuel filling shut off issues																
29	Constant voltage																
30	Spark plug condition								X								

E6U103WC601

X: Applied

	Possible factor / Troubleshooting item		Engine or transaxle mounts are improperly installed.	Cooling fan or condenser fan seats are improper.	Fuel quality	Improper engine oil viscosity	Improper valve timing	Oil leakage (internal, turbocharger, external)	Improper oil or fluid level	Coolant leakage (internal, turbocharger, external)	Variable valve timing system malfunction	Variable tumble control system malfunction	Engine overheating	Air cleaner element clogging or restriction	Air leakage from intake-air system (loose tubes, cracks, gaskets blockage)	Air suction in intake-air system	Intake-air system restriction
1	Melting of main or other fuses																
2	MIL illuminates										X	X					
3	Will not crank																
4	Hard start/long crank/erratic start/erratic crank				X		X							X	X		X
5	Engine stalls	After start/at idle			X						X		X		X		X
6	Cranks normally but will not start				X		X						X	X	X		X
7	Slow return to idle															X	
8	Engine runs rough/rolling idle				X		X						X		X		X
9	Fast/idle runs on										X				X		
10	Low idle/stalls during deceleration						X								X		X
11	Engine stalls/quits	Acceleration/cruise			X		X					X	X	X			X
	Engine runs rough	Acceleration/cruise			X		X					X	X	X			X
	Misses	Acceleration/cruise			X		X					X	X	X			X
	Buck/jerk	Acceleration/cruise/ deceleration			X		X					X	X	X			X
	Hesitation/stumble	Acceleration/cruise			X		X					X	X	X			X
	Surges	Acceleration/cruise			X		X					X	X	X			X
12	Lack/loss of power	Acceleration/cruise			X		X				X	X	X	X	X		X
13	Knocking/pinging	Acceleration/cruise			X								X		X		
14	Poor fuel economy				X		X							X			
15	Emission compliance				X		X						X	X	X		
16	High oil consumption/leakage					X		X									
17	Cooling system concerns	Overheating								X							
18	Cooling system concerns	Runs cold															
19	Exhaust smoke							X		X				X	X		
20	Fuel odor (in engine compartment)																
21	Engine noise								X								
22	Vibration concerns (engine)		X	X													
23	A/C does not work sufficiency																
24	A/C always on or A/C compressor runs continuously.																
25	A/C does not cut off under wide open throttle																
26	Exhaust sulphur smell				X												
27	Fuel refill concerns																
28	Fuel filling shut off issues																
29	Constant voltage																
30	Spark plug condition													X			

E6U103WC602

X: Applied

Troubleshooting item			Possible factor: Electronic throttle control improper operation	Throttle body malfunction	Vacuum leakage (Vacuum hose damage, misrouting)	Turbocharger malfunction	Improper operation of wastegate system	Charge air cooler malfunction	Ignition coil malfunction (e.g. open, short or cracks)	Initial ignition timing misadjustment (CKP and pulse wheel misadjustment)	Spark plug malfunction	Fuel pump (low-pressure side) malfunction (Mechanically or electrically)	Pressure regulator (built-in fuel pump unit at fuel tank)	Inadequate fuel pressure (High-pressure side)	Inadequate fuel pressure (Low-pressure side)	Fuel line restriction or clogging
1	Melting of main or other fuses															
2	MIL illuminates		X													
3	Will not crank															
4	Hard start/long crank/erratic start/erratic crank		X		X				X	X	X	X		X	X	X
5	Engine stalls	After start/at idle	X		X				X			X		X	X	X
6	Cranks normally but will not start		X		X				X		X	X		X	X	X
7	Slow return to idle													X	X	
8	Engine runs rough/rolling idle		X		X				X		X	X		X	X	
9	Fast/idle runs on		X	X												
10	Low idle/stalls during deceleration		X		X									X	X	X
11	Engine stalls/quits	Acceleration/cruise	X	X	X	X	X				X	X		X	X	X
	Engine runs rough	Acceleration/cruise	X	X	X	X	X				X	X		X	X	X
	Misses	Acceleration/cruise	X	X	X	X	X				X	X		X	X	X
	Buck/jerk	Acceleration/cruise/ deceleration	X	X	X	X	X				X	X		X	X	X
	Hesitation/stumble	Acceleration/cruise	X	X	X	X	X				X	X		X	X	X
	Surges	Acceleration/cruise	X	X	X	X	X				X	X		X	X	X
12	Lack/loss of power	Acceleration/cruise	X	X	X	X	X	X	X		X	X		X	X	X
13	Knocking/pinging	Acceleration/cruise	X				X	X	X					X	X	
14	Poor fuel economy				X	X		X	X		X			X	X	X
15	Emission compliance		X	X	X	X	X	X			X			X	X	
16	High oil consumption/leakage					X										
17	Cooling system concerns	Overheating														
18	Cooling system concerns	Runs cold														
19	Exhaust smoke						X		X		X			X	X	
20	Fuel odor (in engine compartment)													X	X	
21	Engine noise				X	X										
22	Vibration concerns (engine)															
23	A/C does not work sufficiency															
24	A/C always on or A/C compressor runs continuously.															
25	A/C does not cut off under wide open throttle															
26	Exhaust sulphur smell				X									X	X	
27	Fuel refill concerns															
28	Fuel filling shut off issues															
29	Constant voltage															
30	Spark plug condition										X	X	X	X	X	X

E6U103WC603

X: Applied

	Possible factor / Troubleshooting item		Fuel injector malfunction (inoperative)	Fuel filters restriction or clogging	Fuel pressure limiter malfunction (built-in common rail)	Spill valve control solenoid valve malfunction (built-in high pressure fuel pump)	Fuel leakage at fuel line	High pressure fuel pump malfunction	Incorrect fuel injection timing or amount	Improper air/fuel ratio mixture control	Injector driver module or related circuit	Fuel pump resister or related circuit malfunction	Exhaust system or catalytic converter restriction	Exhaust gas leakage	Catalytic converter malfunction	EGR system malfunction	EVAP control system malfunction	PCV valve malfunction
1	Melting of main or other fuses																	
2	MIL illuminates		X							X					X	X	X	
3	Will not crank																	
4	Hard start/long crank/erratic start/erratic crank		X	X	X	X	X	X	X	X	X		X			X	X	X
5	Engine stalls	After start/at idle	X		X	X	X	X	X	X	X	X	X			X	X	X
6	Cranks normally but will not start		X		X	X	X	X	X	X	X	X	X			X	X	X
7	Slow return to idle		X		X				X		X							
8	Engine runs rough/rolling idle		X	X	X	X	X	X			X		X			X	X	X
9	Fast/idle runs on		X			X												
10	Low idle/stalls during deceleration		X		X	X	X	X	X		X					X	X	
11	Engine stalls/quits	Acceleration/cruise	X		X	X		X	X	X	X	X	X			X	X	X
	Engine runs rough	Acceleration/cruise	X		X	X		X	X	X	X	X	X			X	X	X
	Misses	Acceleration/cruise	X		X	X		X	X	X	X	X	X			X	X	X
	Buck/jerk	Acceleration/cruise/ deceleration	X		X	X		X	X	X	X	X	X			X	X	X
	Hesitation/stumble	Acceleration/cruise	X		X	X		X	X	X	X	X	X			X	X	X
	Surges	Acceleration/cruise	X		X	X		X	X	X	X	X	X			X	X	X
12	Lack/loss of power	Acceleration/cruise			X	X		X	X		X	X	X	X		X	X	X
13	Knocking/pinging	Acceleration/cruise	X			X			X				X			X		
14	Poor fuel economy		X	X			X	X	X		X		X			X		X
15	Emission compliance		X		X	X		X	X	X	X		X		X	X	X	X
16	High oil consumption/leakage																	X
17	Cooling system concerns	Overheating																
18	Cooling system concerns	Runs cold																
19	Exhaust smoke		X						X					X				X
20	Fuel odor (in engine compartment)		X				X										X	
21	Engine noise																	
22	Vibration concerns (engine)																	
23	A/C does not work sufficiency																	
24	A/C always on or A/C compressor runs continuously.																	
25	A/C does not cut off under wide open throttle																	
26	Exhaust sulphur smell																X	
27	Fuel refill concerns																X	
28	Fuel filling shut off issues																X	
29	Constant voltage																	
30	Spark plug condition		X				X			X			X					

E6U103WC604

X: Applied

	Possible factor / Troubleshooting item		Nonreturn valve malfunction	Fuel shut off valve malfunction	Constant voltage supply circuit malfunction	Main relay malfunction (mechanically or electrically)	No battery power supply to PCM	Poor PCM ground or vehicle ground (open)	Electrical connector disconnection	ECT sensor or related circuit malfunction	Brake switch or related circuit malfunction	Front or rear HO2S sensor or related circuit malfunction	IAT sensor 1 (integrated in MAF sensor) or related circuit malfunction	Boost air temperature sensor (integrated in MAP sensor) or related circuit malfunction	Fuel pressure sensor or related circuit malfunction	MAP sensor or related circuit malfunction
1	Melting of main or other fuses															
2	MIL illuminates								X	X	X	X	X	X	X	X
3	Will not crank					X										
4	Hard start/long crank/erratic start/erratic crank									X		X			X	
5	Engine stalls	After start/at idle					X	X		X		X			X	
6	Cranks normally but will not start								X	X		X			X	
7	Slow return to idle									X					X	
8	Engine runs rough/rolling idle								X	X					X	X
9	Fast/idle runs on									X						
10	Low idle/stalls during deceleration									X	X	X			X	
11	Engine stalls/quits	Acceleration/cruise				X				X			X	X	X	X
	Engine runs rough	Acceleration/cruise				X				X			X	X	X	X
	Misses	Acceleration/cruise				X				X			X	X	X	X
	Buck/jerk	Acceleration/cruise/ deceleration				X				X			X	X	X	X
	Hesitation/stumble	Acceleration/cruise				X				X			X	X	X	X
	Surges	Acceleration/cruise				X				X			X	X	X	X
12	Lack/loss of power	Acceleration/cruise								X			X	X	X	X
13	Knocking/pinging	Acceleration/cruise											X	X	X	X
14	Poor fuel economy									X			X	X	X	X
15	Emission compliance									X		X	X	X	X	X
16	High oil consumption/leakage															
17	Cooling system concerns	Overheating														
18	Cooling system concerns	Runs cold														
19	Exhaust smoke									X		X	X	X		X
20	Fuel odor (in engine compartment)															
21	Engine noise															
22	Vibration concerns (engine)															
23	A/C does not work sufficiency															
24	A/C always on or A/C compressor runs continuously.															
25	A/C does not cut off under wide open throttle															
26	Exhaust sulphur smell								X							
27	Fuel refill concerns		X	X												
28	Fuel filling shut off issues		X	X												
29	Constant voltage				X										X	X
30	Spark plug condition															

E6U103WC605

X: Applied

	Troubleshooting item / Possible factor		CMP sensor damaged (e.g.open or short circuit)	CMP sensor pulse wheel (camshaft) is damaged	Improper gap between CKP sensor and pulse wheel	CKP sensor damaged (e.g.open or short circuit)	CKP sensor pulse wheel damaged	Neutral or clutch switch and related circuit malfunction	MAF sensor or related circuit malfunction	Knock sensor or related circuit malfunction	TP sensor or related circuit malfunction	Accelerator position sensor or related circuit malfunction	P/S pressure switch or related circuit malfunction	Improper vehicle speed signal	Cruise control system operation improperly	A/C system improper operation	Improper refrigerant charging amount	A/C relay (A/C control signal circuit) malfunction
1	Melting of main or other fuses																	
2	MIL illuminates		X		X			X	X	X	X	X	X	X				
3	Will not crank																	
4	Hard start/long crank/erratic start/erratic crank		X	X	X	X	X		X									
5	Engine stalls	After start/at idle	X	X	X	X	X		X			X				X	X	X
6	Cranks normally but will not start		X	X	X	X	X		X			X						
7	Slow return to idle		X	X	X	X	X	X	X			X	X					X
8	Engine runs rough/rolling idle		X	X	X	X	X	X	X			X	X			X	X	X
9	Fast/idle runs on							X				X	X		X			X
10	Low idle/stalls during deceleration		X	X	X	X	X	X	X		X	X				X		
11	Engine stalls/quits	Acceleration/cruise	X	X	X	X	X	X	X		X	X		X		X		
	Engine runs rough	Acceleration/cruise	X	X	X	X	X	X	X		X	X		X		X		
	Misses	Acceleration/cruise	X	X	X	X	X	X	X		X	X		X		X		
	Buck/jerk	Acceleration/cruise/ deceleration	X	X	X	X	X	X	X		X	X		X		X		
	Hesitation/stumble	Acceleration/cruise	X	X	X	X	X	X	X		X	X		X		X		
	Surges	Acceleration/cruise	X	X	X	X	X	X	X		X	X		X		X		
12	Lack/loss of power	Acceleration/cruise	X	X	X	X	X		X			X		X		X		X
13	Knocking/pinging	Acceleration/cruise	X	X					X	X		X						
14	Poor fuel economy		X	X	X	X	X		X			X		X		X		
15	Emission compliance		X	X	X	X	X	X	X		X	X		X				
16	High oil consumption/leakage																	
17	Cooling system concerns	Overheating														X	X	
18	Cooling system concerns	Runs cold																
19	Exhaust smoke				X			X	X		X	X		X				
20	Fuel odor (in engine compartment)																	
21	Engine noise																	
22	Vibration concerns (engine)																	
23	A/C does not work sufficiency															X	X	X
24	A/C always on or A/C compressor runs continuously.															X		X
25	A/C does not cut off under wide open throttle											X						
26	Exhaust sulphur smell																	
27	Fuel refill concerns																	
28	Fuel filling shut off issues																	
29	Constant voltage											X						
30	Spark plug condition								X									

E6U103WC606

X: Applied

Troubleshooting item			Possible factor: A/C compressor magnetic clutch malfunction	Clutch slippage	Brake dragging	Loose parts	Improper balance of wheels and tires	Drive line malfunction	Suspension malfunction	Immobilizer system operating properly	Immobilizer system or related circuit malfunction	Advanced keyless entry system malfunction
1	Melting of main or other fuses											
2	MIL illuminates											
3	Will not crank									X	X	X
4	Hard start/long crank/erratic start/erratic crank											
5	Engine stalls	After start/at idle									X	
6	Cranks normally but will not start										X	
7	Slow return to idle											
8	Engine runs rough/rolling idle											
9	Fast/idle runs on											
10	Low idle/stalls during deceleration		X									
11	Engine stalls/quits	Acceleration/cruise		X								
	Engine runs rough	Acceleration/cruise		X								
	Misses	Acceleration/cruise		X								
	Buck/jerk	Acceleration/cruise/ deceleration		X								
	Hesitation/stumble	Acceleration/cruise		X								
	Surges	Acceleration/cruise		X								
12	Lack/loss of power	Acceleration/cruise		X	X							
13	Knocking/pinging	Acceleration/cruise										
14	Poor fuel economy			X	X							
15	Emission compliance											
16	High oil consumption/leakage											
17	Cooling system concerns	Overheating										
18	Cooling system concerns	Runs cold										
19	Exhaust smoke											
20	Fuel odor (in engine compartment)											
21	Engine noise					X						
22	Vibration concerns (engine)					X	X	X	X			
23	A/C does not work sufficiency		X									
24	A/C always on or A/C compressor runs continuously.		X									
25	A/C does not cut off under wide open throttle											
26	Exhaust sulphur smell											
27	Fuel refill concerns											
28	Fuel filling shut off issues											
29	Constant voltage											
30	Spark plug condition											

E6U103WC607

NO.1 MELTING OF MAIN OR OTHER FUSES [L3 WITH TC]

E6U010318881W80

1	MELTING OF MAIN OR OTHER FUSES

[TROUBLESHOOTING HINTS]
Inspect condition of fuse.

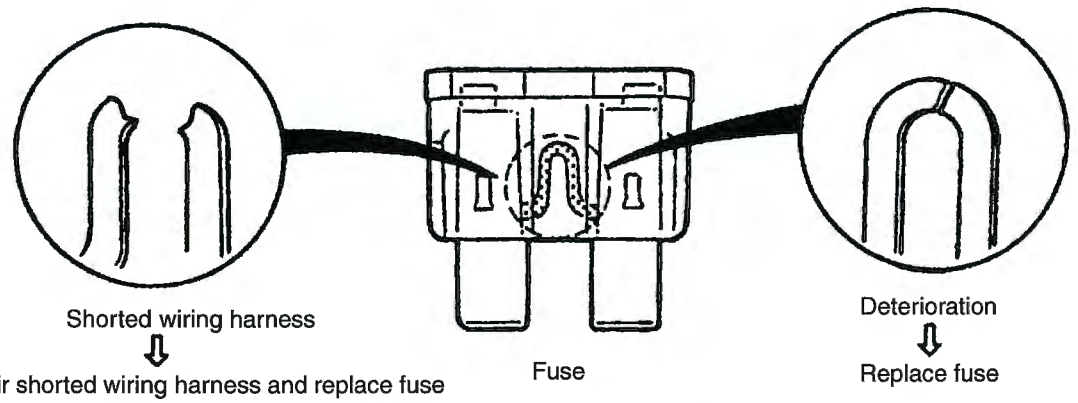

Damaged fuse	Related wiring harness
MAIN	**MAIN fuse** • BTN fuse • IG KEY2 fuse • FAN1 fuse • FAN 2 fuse
BTN	**BTN fuse** • ROOM fuse
ROOM	**ROOM fuse** • DLC-2
IG KEY2	**IG KEY fuse** • Ignition switch
FAN 1	**FAN1 fuse** • Cooling fan relay
FAN 2	**FAN2 fuse** • Cooling fan relay
ENG BB	**ENG BB fuse** • Cooling fan relay • Wastegate control solenoid valve
INJ DRIVE	**INJ DRIVE fuse** • Injector relay
INJ	**INJ fuse** • ETC relay • PCM • CKP sensor • CMP sensor
ENG BAR	**ENG BAR fuse** • Front HO2S • EGR valve • Purge solenoid valve • MAF/IAT sensor • Oil control valve • Variable swirl shutter valve switch • Variable swirl solenoid valve • EVAP system leak detection pump
FUEL PUMP	**FUEL PUMP fuse** • Main relay • Fuel pump resistor — Fuel pump relay — Fuel pump control relay
IG KEY1	**IG KEY1 fuse** • Ignition switch — ENGINE fuse

Damaged fuse	Related wiring harness
ENGINE	**ENGINE fuse** • PCM • Injection relay • Ignition coil • Fuel pump relay
ENG +B	**ENG +B fuse** • PCM
ETC fuse	**ETC fuse** • ETC control relay

NO.2 MIL ILLUMINATES [L3 WITH TC]

E6U010318881W81

2	MIL ILLUMINATES
DESCRIPTION	MIL illuminates incorrectly.
POSSIBLE CAUSE	• PCM illuminates for emission-related concern (DTC is stored in PCM) • Instrument cluster malfunction **Note** • If the MIL blinks at a steady rate, a misfire condition could possibly exist.

Diagnostic procedure

STEP	INSPECTION	RESULTS	ACTION
1	Connect the WDS or equivalent to the DLC. Turn the ignition switch to the ON position. Retrieve any DTCs. Is a DTC displayed?	Yes	**DTC is displayed:** • Go to the appropriate DTC test. (See 01–02B–14 DTC TABLE [L3 WITH TC].)
		No	**No DTC is displayed:** • Inspect for an open or short to circuit between instrument cluster terminal 2W and PCM terminal 2R. • Inspect for an open or short to circuit between instrument cluster terminal 2X and PCM terminal 2U. (See 09–22–5 INSTRUMENT CLUSTER INSPECTION.)
2	Verify test results. • If normal, return to the diagnostic index to service any additional symptoms. • If a malfunction remains, inspect the related Service Bulletins and/or On-line Repair Information and perform the repair or diagnosis. — If the vehicle is repaired, troubleshooting is completed. — If the vehicle is not repaired or additional diagnostic information is not available, reprogram the PCM if a later calibration is available. Retest.		

NO.3 WILL NOT CRANK [L3 WITH TC]

E6U010318881W82

3	WILL NOT CRANK
DESCRIPTION	Starter does not work.
POSSIBLE CAUSE	• Open starter circuit between the ignition switch and the starter • Low or dead battery • Charging system malfunction • Starter interlock switch malfunction • Starter malfunction • Seized/hydro-locked engine, flywheel • Immobilizer system and/or related circuit malfunction • Immobilizer system operates properly (Key is not registered.) • Advanced keyless entry system malfunction

Diagnostic procedure

STEP	INSPECTION	RESULTS	ACTION
1	**Note** • The following test should be performed on the advanced keyless entry system. If not equipped, go to the next step. Start the engine using the standard ignition key. Does the engine start?	Yes	Inspect the advanced keyless entry system and repair or replace according to the inspection result. (See 09–03G–2 SYMPTOM TROUBLESHOOTING CHART [KEYLESS ENTRY SYSTEM].)
		No	Go to next step.
2	Connect the WDS or equivalent to the DLC-2. Do any of the following conditions appear? • Engine does not complete start. • DTC B1681 is displayed.	Yes	**Both conditions are appear:** Go to Step 6.
		No	**Either or other condition appears:** Go to the next step.
3	Is the coil connector securely connected to the coil?	Yes	Go to the next step.
		No	Connect the connector securely, retest from Step 2.
4	Does the security light illuminate?	Yes	Go to the next step.
		No	Inspect and repair or replace the following: • Wiring harnesses and connectors from PCM terminal 2W and instrument cluster terminal 1G • Instrument cluster (See 09–22–5 INSTRUMENT CLUSTER INSPECTION.)
5	Retrieve DTCs using the WDS or equivalent. Are any of the following DTCs present? **DTC B1213, B1342, B1600, B1601, B1602, B1681, B2103, B2431**	Yes	Go to the appropriate DTC test. (See 09–02F–3 DTC TABLE [IMMOBILIZER SYSTEM].)
		No	Advanced keyless entry system is not equipped: Go to the next step. Advanced keyless entry system is equipped: Go to Step 11.
6	Is there continuity between PCM terminal 4X, 2AB, 2AC and ground?	Yes	Go to the next step.
		No	Repair or replace the wiring harness.
7	Turn the ignition switch to the ON position (Engine off.) Measure voltage between PCM terminal 4X, 2AB, 2AC and ground. Is the voltage **below 1.0V?**	Yes	Go to the next step.
		No	Repair or replace the wiring harness.
8	Turn the ignition switch to the ON position. (Engine off) Access the VPWR PID. Is the VPWR PID normal? **VPWR PID** **Battery voltage**	Yes	Go to the next step.
		No	Repair or replace the wiring harness.
9	Disconnect the coil connector. Turn the ignition switch to the ON position. (Engine off) Is there battery voltage at coil connector terminal D?	Yes	Go to the next step.
		No	Repair or replace the wiring harness between coil connector terminal D and the fuse panel.
10	Inspect the following wiring harness and connectors. • Between coil terminal A and PCM terminal 2Q • Between coil terminal B and PCM terminal 2T Is there any malfunction (open or short circuit, terminal corrosion, etc.)?	Yes	Repair or replace malfunctioning part.
11	Is there continuity between the keyless CM harness-side connector terminal 3C and body ground?	Yes	Go to the next step.
		No	Repair or replace the wiring harness.
12	Turn the ignition switch to the ON position. Measure the voltage between keyless CM harness-side connector terminal 3C and body ground. Is the voltage **below 1.0V?**	Yes	Go to the next step.
		No	Repair or replace the wiring harness.

STEP	INSPECTION	RESULTS	ACTION
13	Turn the ignition switch to the ON position. (Engine off.) Measure the voltage between keyless CM harness-side connector terminal 3B, 3D, 3I and body ground. Is the voltage **B+**?	Yes	Go to the next step.
		No	Repair or replace the wiring harness.
14	Turn the ignition switch off. Disconnect the coil connector. Turn the ignition switch to the ON position. (Engine off.) Measure the voltage between coil harness-side connector terminal D and body ground. Is the voltage **B+**?	Yes	Go to the next step.
		No	Repair or replace the wiring harness.
15	Inspect the following wiring harnesses and connectors. • Between keyless CM terminal 3Y and coil A • Between keyless CM terminal 3AA and coil B • Between keyless CM terminal 4A and PCM 2T • Between keyless CM terminal 4C and PCM 2Q Is there any malfunction (open or short circuit, terminal corrosion, etc.)?	Yes	Repair or replace malfunctioning part.
		No	Go to the next step.
16	Is there continuity between PCM terminal 4I and the starter relay with the clutch pedal depressed?	Yes	Go to the next step.
		No	Repair or replace the wiring harness.
17	Inspect the following: • Battery connection • Battery condition • Fuses Are all items normal?	Yes	Go to the next step.
		No	Service if necessary. Repeat Step 1.
18	Is a clicking sound heard from the starter when the ignition switch is turned to the START position?	Yes	Go to the next step.
		No	Go to Step 24.
19	Inspect the starting system. (See 01–19B–3 STARTER INSPECTION [L3 WITH TC].) Is the starting system normal?	Yes	Inspect for a seized/hydro-locked engine, flywheel. (See 05–10–32 FLYWHEEL INSPECTION [A26MX-R].)
		No	Repair or replace components if necessary required.
20	Do any other electrical accessories work?	Yes	Go to the next step.
		No	Inspect the charging system. (See 01–17B–2 BATTERY INSPECTION [L3 WITH TC].) (See 01–17B–6 GENERATOR INSPECTION [L3 WITH TC].)
21	Perform the self-test function using the WDS or equivalent. Turn the ignition switch to the ON position. Retrieve any DTCs. Is a DTC displayed?	Yes	**DTC is displayed:** Go to the appropriate DTC test. (See 01–02B–14 DTC TABLE [L3 WITH TC].)
		No	**No DTC is displayed:** Inspect the following: • START circuit in the ignition switch • Open circuit between ignition switch and starter • Starter interlock switch
22	Verify test results. • If normal, return to the diagnostic index to service any additional symptoms. • If a malfunction remains, inspect the related Service Bulletins and/or On-line Repair Information and perform the repair or diagnosis. — If the vehicle is repaired, troubleshooting is completed. — If the vehicle is not repaired or additional diagnostic information is not available, reprogram the PCM if a later calibration is available. Retest.		

NO.4 HARD TO START/LONG CRANK/ERRATIC START/ERRATIC CRANK [L3 WITH TC]

E6U010318881W83

4	HARD TO START/LONG CRANK/ERRATIC START/ERRATIC CRANK
DESCRIPTION	• Starter cranks the engine at normal speed but the engine requires excessive cranking time before starting. • Battery is operating normally
POSSIBLE CAUSE	• Vacuum leakage • Poor fuel quality • Starting system malfunction • Erratic signal to ignition coils • Spark plug malfunction • Air leakage from intake-air system • Improper air/fuel mixture ratio control • Incorrect fuel injection timing • Erratic signal from CKP sensor • Erratic signal from CMP sensor • Front and/rear HO2S sensor or related circuit malfunction • ECT sensor or related circuit malfunction • MAF sensor or related circuit malfunction • Intake-air system restriction • Improper operation of electronic throttle control system • PCV valve malfunction • Inadequate fuel pressure (high or low pressure side) • Relief valve malfunction (built-in delivery pipe) • Spill valve control solenoid valve malfunction (built-in high pressure fuel pump) • Fuel filter clogging • Fuel line restriction • Fuel leakage • Fuel pump (low-side) resister or related circuit malfunction • Fuel injector malfunction • Fuel pressure sensor malfunction • High pressure fuel pump malfunction • Exhaust system or three-way catalytic converter restriction • EGR valve malfunction • Purge solenoid valve malfunction • Low engine compression • Improper valve timing • Injector driver module or related circuit malfunction **Warning** **The following troubleshooting flow chart contains the fuel system diagnosis and repair procedures. Read the following warnings before performing the fuel system services:** **• Fuel vapor is hazardous. It can easily ignite, causing serious injury and damage. Always keep sparks and flames away from fuel.** **• Fuel line spills and leakage are dangerous. Fuel can ignite and cause serious injury or death and damage. Fuel can also irritate skin and eyes. To prevent this, always complete "BEFORE REPAIR ROCEDURE" and "AFTER REPAIR PROCEDURE" described in this manual.** **(See 01–14B–4 BEFORE REPAIR PROCEDURE [L3 WITH TC].)** **(See 01–14B–5 AFTER REPAIR PROCEDURE [L3 WITH TC].)** **Caution** **• Disconnecting/connecting the quick release connector without cleaning it may possibly cause damage to the fuel pipe and quick release connector. Always clean the quick release connector joint area before disconnecting/connecting, and make sure that it is free of foreign material.**

Diagnostic procedure

STEP	INSPECTION	RESULTS	ACTION
1	Inspect for the following: • Fuel quality (proper octane, contamination, winter/summer blend) • Fuel leakage • Intake-air system leakage or restriction • Vacuum leakage Are all items normal?	Yes	Go to the next step.
		No	Service if necessary. Repeat Step 1.
2	Perform the self-test function using the WDS or equivalent. Turn the ignition switch to the ON position. Retrieve any DTCs. Is a DTC displayed?	Yes	**DTC is displayed:** Go to the appropriate DTC test. (See 01–02B–14 DTC TABLE [L3 WITH TC].)
		No	**No DTC is displayed:** Go to the next step.
3	Access the ECT PID using the WDS or equivalent. Verify that the ECT PID is **less than 116°C {241°F}** during driving. Is the ECT PID less than specified?	Yes	Go to the next step.
		No	The cause of this concern could be from the cooling system overheating. Perform the symptom troubleshooting "NO.17 COOLING SYSTEM CONCERNS - OVERHEATING." (See 01–03B–61 NO.17 COOLING SYSTEM CONCERNS-OVERHEATING [L3 WITH TC].)
4	Will the engine run smoothly at part throttle?	Yes	Go to the next step.
		No	Go to Step 6.
5	Perform the TP sweep inspection. (See 01–03B–85 Throttle position (TP) sweep inspection.) Does the electronic throttle control system work properly?	Yes	Visually inspect the throttle body (damage/scratching.) If normal, go to the next step.
		No	Inspect or replace the malfunctioning parts, according to the inspection results.
6	Perform the EGR system operation inspection. (See 01–03B–90 EGR Control System Inspection.) Does the EGR system operate properly?	Yes	Go to the next step.
		No	Inspect or replace the malfunctioning parts, according to the inspection results.
7	Perform the Purge Control System Operation inspection. (See 01–03B–91 Purge Control System Inspection.) Does the purge solenoid valve work properly?	Yes	Go to the next step.
		No	Inspect or replace the malfunctioning parts, according to the inspection results.
8	Inspect the CMP and CKP sensor for the following; • Installation condition (See 01–40B–38 CAMSHAFT POSITION (CMP) SENSOR REMOVAL/INSTALLATION [L3 WITH TC].) (See 01–40B–41 CRANKSHAFT POSITION (CKP) SENSOR REMOVAL/INSTALLATION [L3 WITH TC].) • Damaged trigger wheel and camshaft • Open or short circuit in the wiring harnesses. Is there any malfunction detected?	Yes	Repair or replace the malfunctioning part according to the inspection results.
		No	Go to the next step.
9	Access and monitor following the PIDs using the data monitor function. • ECT • MAF • O2S11 • O2S12 • LONGFT1 • SHTFT1 Do the PIDs indicate the correct values under trouble condition? (See 01–40B–6 Using the WDS or Equivalent.)	Yes	Go to the next step.
		No	Inspect and repair or replace suspected parts and the related harnesses. If the malfunction remains, perform the intermittent concern troubleshooting. (See 01–03B–6 INTERMITTENT CONCERN TROUBLESHOOTING [L3 WITH TC].)
10	Remove and shake the PCV valve. Does the PCV valve rattle?	Yes	Go to the next step.
		No	Replace the PCV valve.
11	Inspect for restriction in the exhaust system and the three-way catalytic converter (TWC). Is there any restriction?	Yes	Replace the malfunctioning part.
		No	Go to the next step.

STEP	INSPECTION	RESULTS	ACTION
12	Perform the spark test. (See 01–03B–90 Spark Test.) Is a strong blue spark visible at each cylinder?	Yes	Go to the next step.
		No	Inspect or replace the malfunctioning parts, according to the inspection results.
13	Access and monitor the FUEL_PRES PID. Is the FUEL_PRES PID value within the specification? (See 01–40B–6 Using the WDS or Equivalent.)	Yes	Go to Step 38.
		No	Go to the next step.
14	Is the vehicle accelerate performance normally?	Yes	Go to the next step.
		No	Go to Step 16.
15	Inspect the fuel pressure sensor. (See 01–40B–34 FUEL PRESSURE SENSOR INSPECTION [L3 WITH TC].) Is the fuel pressure sensor normal?	Yes	Go to Step 17.
		No	Replace the delivery pipe.
16	Replace the high pressure fuel pump. Monitor FUEL_PRES PID. Is the FUEL_PRES PID value within the specified? (See 01–40B–6 Using the WDS or Equivalent.)	Yes	Troubleshooting is completed. Go to Step 21.
		No	Inspect the fuel pressure sensor. (See 01–40B–34 FUEL PRESSURE SENSOR INSPECTION [L3 WITH TC].)
17	Connect the fuel pressure gauge between the fuel pump and the high pressure fuel pump. Measure the fuel pressure line of the low pressure side. (See 01–14B–5 FUEL LINE PRESSURE INSPECTION [L3 WITH TC].) Is the fuel pressure within the specification?	Yes	Go to the next step.
		No	Inspect for the following: • Fuel line restriction • Fuel filter clogging If normal replace the fuel pump.
18	Inspect the fuel injector for each cylinder. (See 01–14B–29 FUEL INJECTOR INSPECTION [L3 WITH TC].) Are the fuel injectors normal?	Yes	Go to the next step.
		No	Replace the suspected fuel injector. (See 01–14B–25 FUEL INJECTOR REMOVAL/ INSTALLATION [L3 WITH TC].)
19	Measure the compression pressure for each cylinder. (See 01–10B–9 COMPRESSION INSPECTION [L3 WITH TC].) Does the starting system work properly?	Yes	Go to the next step.
		No	Inspect for the following: • Damaged valve seat • Worn valve stem and valve guide • Worn or stuck piston ring • Worn piston, piston ring or cylinder • Improper valve timing Service if necessary.
20	Inspect the starting system. (See 01–19B–3 STARTER INSPECTION [L3 WITH TC].) Does the starting system work properly?	Yes	Replace the injector driver module. If the problem remains, overhaul the engine.
		No	Repair or replace the malfunctioning part.
21	Verify test results. • If normal, return to the diagnostic index to service any additional symptoms. • If a malfunction remains, inspect the related Service Bulletins and/or On-line Repair Information and perform the repair or diagnosis. — If the vehicle is repaired, troubleshooting is completed. — If the vehicle is not repaired or additional diagnostic information is not available, reprogram the PCM if a later calibration is available. Retest.		

NO.5 ENGINE STALLS-AFTER START/AT IDLE [L3 WITH TC]

E6U010318881W84

5	ENGINE STALLS - AFTER START/AT IDLE
DESCRIPTION	• Engine stops unexpectedly.
POSSIBLE CAUSE	• A/C system improper operation • Air leakage from intake-air system • Purge solenoid valve malfunction • Improper operation of electronic throttle control system • EGR valve malfunction • Vacuum leakage • Engine overheating • Low engine compression • Ignition system malfunction • Poor fuel quality • PCV valve malfunction • Intake-air system restriction • Exhaust system and/or three-way catalytic converter (TWC) restriction or clogging • Electrical connector disconnection • Open or short circuit in the fuel pump (low-side) body or related wiring harness • Fuel pump resister or related circuit malfunction • No battery power supply to PCM or poor ground • Inadequate fuel pressure (high or low pressure side) • Fuel pressure sensor or related circuit malfunction • Spill valve control solenoid valve malfunction (built-in high pressure fuel pump) • Relief valve malfunction (built-in delivery pipe) • Fuel pump (low-side) body mechanical malfunction • Fuel leakage • Fuel line restriction • Fuel filter clogging • Incorrect fuel injection timing • High pressure fuel pump malfunction • Fuel injector malfunction • Ignition coil malfunction • Improper air/fuel mixture ratio control • No signal from CKP sensor due to sensor, related wiring harness or wrong installation • Erratic signal from CMP sensor • Front and/or rear HO2S sensor or related circuit malfunction • ECT sensor or related circuit malfunction • Accelerator positions sensor or related circuit malfunction • MAF sensor or related circuit malfunction • Improper valve timing • Improper operation variable valve timing control system • Immobilizer system and/or circuit malfunction • Injector driver module or related circuit malfunction **Warning** **The following troubleshooting flow chart contains the fuel system diagnosis and repair procedures. Read the following warnings before performing the fuel system services:** • **Fuel vapor is hazardous. It can easily ignite, causing serious injury and damage. Always keep sparks and flames away from fuel.** • **Fuel line spills and leakage are dangerous. Fuel can ignite and cause serious injury or death and damage. Fuel can also irritate skin and eyes. To prevent this, always complete "BEFORE REPAIR ROCEDURE" and "AFTER REPAIR PROCEDURE" described in this manual.** **(See 01–14B–4 BEFORE REPAIR PROCEDURE [L3 WITH TC].)** **(See 01–14B–5 AFTER REPAIR PROCEDURE [L3 WITH TC].)** **Caution** • **Disconnecting/connecting the quick release connector without cleaning it may possibly cause damage to the fuel pipe and quick release connector. Always clean the quick release connector joint area before disconnecting/connecting, and make sure that it is free of foreign material.**

Diagnostic procedure

STEP	INSPECTION	RESULTS	ACTION
1	Connect the WDS or equivalent to the DLC-2. Do any of the following conditions appear? • Engine does not start completely. • DTC B1681 is displayed.	Yes	**Both conditions are appear:** Go to Step 5.
		No	**Either or other condition appears:** Go to the next step.
2	Does the engine stall after **approx. 2s** from when it is started?	Yes	Go to the next step.
		No	Is the immobilizer system is normal? Go to Step 16.
3	Is the coil connector securely connected to coil?	Yes	Go to the next step.
		No	Connect the connector securely, retest from Step 2.
4	Does the security light illuminate?	Yes	Go to the next step.
		No	Inspect and repair or replace the following: • Wiring harnesses and connectors from PCM terminal 2W and instrument cluster terminal 1G • Instrument cluster (See 09–22–5 INSTRUMENT CLUSTER INSPECTION.)
5	Retrieve the DTC using the WDS or equivalent. Are any of the following DTCs present? **DTC B1213, B1342, B1600, B1601, B1602, B1681, B2103, B2431**	Yes	Go to appropriate DTC test. (See 09–02F–3 DTC TABLE [IMMOBILIZER SYSTEM])
		No	Advanced keyless entry system is not equipped: Go to the next step. Advanced keyless entry system is equipped: Go to Step 11.
6	Is there continuity between PCM terminal 4X, 2AB, 2AC and ground?	Yes	Go to the next step.
		No	Repair or replace the wiring harness.
7	Turn the ignition switch to the ON position (Engine off.) Measure the voltage between PCM terminal 4X, 2AB, 2AC and ground. Is the voltage **below 1.0V**?	Yes	Go to the next step.
		No	Repair or replace the wiring harness.
8	Turn the ignition switch to the ON position. (Engine off) Access the VPWR PID. Is the VPWR PID normal? **VPWR PID** **Battery voltage**	Yes	Go to the next step.
		No	Repair or replace the wiring harness.
9	Disconnect the coil connector. Turn the ignition switch to the ON position. (Engine off) Is there battery voltage at coil connector terminal D?	Yes	Go to the next step.
		No	Repair or replace the wiring harness between coil connector terminal D and the fuse panel.
10	Inspect the following wiring harness and connectors. • Between coil terminal A and PCM terminal 2Q • Between coil terminal B and PCM terminal 2T Is there any malfunction (open or short circuit, terminal corrosion, etc.)?	Yes	Repair or replace malfunction part.
		No	Go to the next step.
11	Is there continuity between the keyless CM harness-side connector terminal 3C and body ground?	Yes	Go to the next step.
		No	Repair or replace the wiring harness.
12	Turn the ignition switch to the ON position. Measure the voltage between keyless CM harness-side connector terminal 3C and body ground. Is the voltage **below 1.0V**?	Yes	Go to the next step.
		No	Repair or replace the wiring harness.
13	Turn the ignition switch to the ON position. (Engine off.) Measure the voltage between keyless CM harness-side connector terminal 3B, 3D, 3I and body ground. Is the voltage **B+**?	Yes	Go to the next step.
		No	Repair or replace the wiring harness.

STEP	INSPECTION	RESULTS	ACTION
14	Turn the ignition switch off. Disconnect the coil connector. Turn the ignition switch to the ON position. (Engine off.) Measure the voltage between coil harness-side connector terminal D and body ground. Is the voltage **B+**?	Yes	Go to the next step.
		No	Repair or replace the wiring harness.
15	Inspect the following wiring harnesses and connectors. • Between keyless CM terminal 3Y and coil A • Between keyless CM terminal 3AA and coil B • Between keyless CM terminal 4A and PCM 2T • Between keyless CM terminal 4C and PCM 2Q Is there any malfunction (open or short circuit, terminal corrosion, etc.)?	Yes	Repair or replace malfunctioning part.
		No	Go to the next step.
16	Inspect for the following: • Fuel quality (proper octane, contamination, winter/summer blend) • Intake-air system leakage and restriction • Electrical connectors • Poor connection for PCM ground and body ground • Fuel leakage • Vacuum leakage Are all items normal?	Yes	Go to the next step.
		No	Service if necessary. Repeat Step 16.
17	Perform the self-test function using WDS or equivalent. Turn the ignition switch to the ON position. Retrieve any DTCs. Is the DTC displayed?	Yes	DTC is displayed: Go to the appropriate DTC test. (See 01–02B–14 DTC TABLE [L3 WITH TC].)
		No	No DTC is displayed: Go to the next step.
18	Access the ECT PID using the WDS or equivalent. Verify that the ECT PID is **less than 116 °C {241 °F}** during driving. Is the ECT PID less than specified?	Yes	Go to the next step.
		No	The cause of this concern could from be cooling system overheating. Perform the symptom troubleshooting "NO.17 COOLING SYSTEM CONCERNS - OVERHEATING." (See 01–03B–61 NO.17 COOLING SYSTEM CONCERNS-OVERHEATING [L3 WITH TC].)
19	Access the VPWR PID. Turn the ignition switch to the ON position. (Engine off) Does the VPWR PID indicate **B+**?	Yes	Go to the next step.
		No	Repair or replace the wiring harness between main relay terminal C and PCM terminal 2Y and 1D.
20	Perform the A/C Cut-off Operation Inspection. (See 01–03B–92 A/C Cut-off Control System Inspection.) Does the A/C Cut-off Operation work properly?	Yes	Go to the next step.
		No	Repair or replace malfunctioning parts according to the inspection results.
21	Will the engine run smoothly at part throttle?	Yes	Go to the next step.
		No	Go to Step 23.
22	Perform the TP sweep inspection. (See 01–03B–85 Throttle position (TP) sweep inspection.) Does the electronic throttle control system work properly?	Yes	Visually inspect the throttle body (damaged/scratching.) If normal, go to the next step.
		No	Inspect or replace the malfunctioning parts, according to the inspection results.
23	Perform the EGR system operation inspection. (See 01–03B–90 EGR Control System Inspection.) Does EGR system operate properly?	Yes	Go to the next step.
		No	Inspect or replace the malfunctioning parts, according to the inspection results.
24	Perform the Purge Control System Operation inspection. (See 01–03B–91 Purge Control System Inspection.) Does the purge solenoid valve work properly?	Yes	Go to the next step.
		No	Inspect or replace the malfunctioning parts, according to the inspection results.

STEP	INSPECTION	RESULTS	ACTION
25	Perform the Variable Valve Timing Control System Operation Inspection. (See 01–03B–93 Variable Valve Timing Control System Operation Inspection.) Does the variable valve timing control system work properly?	Yes	Inspect the valve timing.
		No	Inspect or replace the malfunctioning parts, according to the inspection results.
26	Inspect the CMP and CKP sensor for the following; • Installation condition (See 01–40B–38 CAMSHAFT POSITION (CMP) SENSOR REMOVAL/INSTALLATION [L3 WITH TC].) (See 01–40B–41 CRANKSHAFT POSITION (CKP) SENSOR REMOVAL/INSTALLATION [L3 WITH TC].) • Damaged trigger wheel and camshaft • Open or short circuit in the wiring harnesses Is there any malfunction detected?	Yes	Repair or replace the malfunctioning part according inspection results.
		No	Go to the next step.
27	Access and monitor the following PIDs using the data monitor function. • ECT • APP • MAF • O2S11 • O2S12 • LONGFT1 • SHTFT1 Do the PIDs indicate the correct values under the malfunction condition? (See 01–40B–6 Using the WDS or Equivalent.)	Yes	Go to the next step.
		No	Inspect and repair or replace suspected parts and related harnesses. If the malfunction remains, perform the intermittent concern troubleshooting procedure. (See 01–03B–6 INTERMITTENT CONCERN TROUBLESHOOTING [L3 WITH TC].)
28	Remove and shake the PCV valve. Does the PCV valve rattle?	Yes	Go to the next step.
		No	Replace the PCV valve.
29	Inspect for restriction in the exhaust system and Three-way catalytic converter (TWC). Is there any restriction?	Yes	Replace malfunctioning part.
		No	Go to the next step.
30	Perform the spark test. (See 01–03B–90 Spark Test.) Is a strong blue spark visible at each cylinder?	Yes	Go to the next step.
		No	Inspect or replace the malfunctioning parts, according to the inspection results.
31	Access and monitor the FUEL_PRES PID. Is the FUEL_PRES PID value within the specification? (See 01–40B–6 Using the WDS or Equivalent.)	Yes	Go to Step 35.
		No	Go to the next step.
32	Is the vehicle accelerate performance normally?	Yes	Go to the next step.
		No	Go to Step 34.
33	Inspect the fuel pressure sensor. (See 01–40B–34 FUEL PRESSURE SENSOR INSPECTION [L3 WITH TC].) Is the fuel pressure sensor normal?	Yes	Go to Step 35.
		No	Replace the delivery pipe.
34	Replace the high pressure fuel pump. Monitor FUEL_PRES PID. Is the FUEL_PRES PID value within the specified? (See 01–40B–6 Using the WDS or Equivalent.)	Yes	Troubleshooting is completed. Go to Step 38.
		No	Inspect the fuel pressure sensor. (See 01–40B–34 FUEL PRESSURE SENSOR INSPECTION [L3 WITH TC].)
35	Connect the fuel pressure gauge between the fuel pump and the high pressure fuel pump. Measure the fuel pressure line of the low pressure side. (See 01–14B–5 FUEL LINE PRESSURE INSPECTION [L3 WITH TC].) Is the fuel pressure within the specification?	Yes	Go to the next step.
		No	Inspect for the following: • Fuel line restriction • Fuel filter clogging If normal, replace the fuel pump.
36	Inspect the fuel injector for each cylinder. (See 01–14B–29 FUEL INJECTOR INSPECTION [L3 WITH TC].) Are the fuel injectors normal?	Yes	Go to the next step.
		No	Replace the suspected fuel injector. (See 01–14B–25 FUEL INJECTOR REMOVAL/INSTALLATION [L3 WITH TC].)

STEP	INSPECTION	RESULTS	ACTION
37	Measure the compression pressure for each cylinder. (See 01–10B–9 COMPRESSION INSPECTION [L3 WITH TC].) Are the compression pressures within the specification?	Yes	Replace the injector driver module. If the problem remains, overhaul the engine.
		No	Inspect for the following: • Damaged valve seat • Worn valve stem and valve guide • Worn or stuck piston ring • Worn piston, piston ring or cylinder • Improper valve timing Service if necessary.
38	Verify test results. • If normal, return to the diagnostic index to service any additional symptoms. • If a malfunction remains, inspect the related Service Bulletins and/or On-line Repair Information and perform the repair or diagnosis. — If the vehicle is repaired, troubleshooting is completed. — If the vehicle is not repaired or additional diagnostic information is not available, reprogram the PCM if a later calibration is available. Retest.		

NO.6 CRANKS NORMALLY BUT WILL NOT START [L3 WITH TC]

E6U010318881W85

6	CRANKS NORMALLY BUT NOT START
DESCRIPTION	• Starter cranks engine at normal speed but engine will not run. • Refer to symptom troubleshooting "No.5 Engine stalls" if this symptom appears after the engine stalls. • Fuel is in tank. • Battery is in normal condition.
POSSIBLE CAUSE	• Air leakage from intake-air system • Open PCM ground or vehicle body ground • Improper operation of electronic throttle control system • EGR valve malfunction • Low engine compression • Engine overheating • Vacuum leakage • Ignition system malfunction • Poor fuel quality • PCV valve malfunction • Intake-air system restriction • Improper air/fuel mixture ratio control • No signal from CKP sensor due to sensor, related wire or incorrect installation • No signal from CMP sensor due to sensor, related wire or incorrect installation • Front and/or rear HO2S sensor or related circuit malfunction • ECT sensor or related circuit malfunction • Accelerator position sensor or related circuit malfunction • MAF sensor or related circuit malfunction • High pressure fuel pump malfunction • Exhaust system or three-way catalytic converter (TWC) malfunction • Disconnected electrical connector • Open or short in fuel pump (low-side) body and related harness • Inadequate fuel pressure (high or low pressure side) • Fuel pressure sensor or related circuit malfunction • Relief valve malfunction (built-in high pressure fuel pump) • Fuel line clogging or restriction • Incorrect fuel injection timing • Fuel pump resistor or control relay malfunction • Fuel pump (low-side) mechanical malfunction • Fuel leakage • Fuel injector malfunction • Purge solenoid valve malfunction • Spark plug malfunction • Ignition coil malfunction • Improper valve timing • Improper variable valve timing control system operation • Immobilizer system or related circuit malfunction • Injector driver module or related circuit malfunction **Warning** **The following troubleshooting flow chart contains the fuel system diagnosis and repair procedures. Read the following warnings before performing the fuel system services:** • **Fuel vapor is hazardous. It can easily ignite, causing serious injury and damage. Always keep sparks and flames away from fuel.** • **Fuel line spills and leakage are dangerous. Fuel can ignite and cause serious injury or death and damage. Fuel can also irritate skin and eyes. To prevent this, always complete "BEFORE REPAIR ROCEDURE" and "AFTER REPAIR PROCEDURE" described in this manual.** **(See 01–14B–4 BEFORE REPAIR PROCEDURE [L3 WITH TC].)** **(See 01–14B–5 AFTER REPAIR PROCEDURE [L3 WITH TC].)** **Caution** • **Disconnecting/connecting the quick release connector without cleaning it may possibly cause damage to the fuel pipe and quick release connector. Always clean the quick release connector joint area before disconnecting/connecting, and make sure that it is free of foreign material.**

Diagnostic procedure

STEP	INSPECTION	RESULTS	ACTION
1	Connect the WDS or equivalent to the DLC-2. Do any of the following conditions appear? • Engine does not completely start. • DTC B1681 is displayed.	Yes	**Both conditions are appear:** Go to Step 5.
		No	**Either or other condition appears:** Go to the next step.
2	Does the engine stall after **approx. 2s** from when it is started?	Yes	Go to the next step.
		No	Is the Is the immobilizer system is normal. Go to Step 20.
3	Is the coil connector securely connected to coil?	Yes	Go to the next step.
		No	Connect the connector securely, retest from Step 1.
4	Does the security light illuminate?	Yes	Go to the next step.
		No	Inspect and repair or replace the following: • Wiring harnesses and connectors from PCM terminal 2W and instrument cluster terminal 1G • Instrument cluster (See 09–22–5 INSTRUMENT CLUSTER INSPECTION.)
5	Retrieve the DTC using the WDS or equivalent. Are any of the following DTCs present? **DTC** **B1213, B1342, B1600, B1601, B1602, B1681, B2103, B2431**	Yes	Go to appropriate DTC test. (See 09–02F–3 DTC TABLE [IMMOBILIZER SYSTEM].)
		No	Advanced keyless entry system is not equipped: Go to the next step. Advanced keyless entry system is equipped: Go to Step 11.
6	Is there continuity between PCM terminal 4X, 2AB, 2AC and ground?	Yes	Go to the next step.
		No	Repair or replace the wiring harness.
7	Turn the ignition switch to the ON position (Engine off.) Measure the voltage between PCM terminal 4X, 2AB, 2AC and ground. Is the voltage **below 1.0V?**	Yes	Go to the next step.
		No	Repair or replace the wiring harness.
8	Turn the ignition switch to the ON position. (Engine off) Access the VPWR PID. Is the VPWR PID normal? **VPWR PID** **Battery voltage**	Yes	Go to the next step.
		No	Repair or replace the wiring harness.
9	Disconnect the coil connector. Turn the ignition switch to the ON position. (Engine off) Is there battery voltage at coil connector terminal D?	Yes	Go to the next step.
		No	Repair or replace the wiring harness between coil connector terminal D and the fuse panel.
10	Inspect the following wiring harness and connectors. • Between coil terminal A and PCM terminal 2Q • Between coil terminal B and PCM terminal 2T Is there any malfunction (open or short circuit, terminal corrosion, etc.)?	Yes	Repair or replace malfunctioning part.
		No	Go to the next step.
11	Is there continuity between the keyless CM harness-side connector terminal 3C and body ground?	Yes	Go to the next step.
		No	Repair or replace the wiring harness.
12	Turn the ignition switch to the ON position. Measure the voltage between keyless CM harness-side connector terminal 3C and body ground. Is the voltage **below 1.0V?**	Yes	Go to the next step.
		No	Repair or replace the wiring harness.
13	Turn the ignition switch to the ON position. (Engine off.) Measure the voltage between keyless CM harness-side connector terminal 3B, 3D, 3I and body ground. Is the voltage **B+**?	Yes	Go to the next step.
		No	Repair or replace the wiring harness.

STEP	INSPECTION	RESULTS	ACTION
14	Turn the ignition switch off. Disconnect the coil connector. Turn the ignition switch to the ON position. (Engine off.) Measure the voltage between coil harness-side connector terminal D and body ground. Is the voltage **B+**?	Yes	Go to the next step.
		No	Repair or replace the wiring harness.
15	Inspect the following wiring harnesses and connectors. • Between keyless CM terminal 3Y and coil A • Between keyless CM terminal 3AA and coil B • Between keyless CM terminal 4A and PCM 2T • Between keyless CM terminal 4C and PCM 2Q Is there any malfunction (open or short circuit, terminal corrosion, etc.)?	Yes	Repair or replace malfunctioning part.
		No	Go to the next step.
16	Inspect for the following: • Fuel quality (proper octane, contamination, winter/summer blend) • Intake-air system leakage and restriction • Electrical connectors • Fuses • Fuel leakage • Vacuum leakage • Poor connection for PCM ground and body ground Are all items normal?	Yes	Go to the next step.
		No	Service if necessary. Repeat Step 16.
17	Perform the self-test function using the WDS or equivalent. Turn the ignition switch to the ON position. Retrieve any DTCs. Is a DTC displayed?	Yes	DTC is displayed: Go to the appropriate DTC test. (See 01–02B–14 DTC TABLE [L3 WITH TC].)
		No	No DTC is displayed: Go to the next step.
18	Access the ECT PID using the WDS or equivalent. Verify that the ECT PID is **less than 116°C {241°F}** during driving. Is the ECT PID less than specified?	Yes	Go to the next step.
		No	The cause of this concern could be from the cooling system overheating. Perform the symptom troubleshooting "NO.17 COOLING SYSTEM CONCERNS - OVERHEATING." (See 01–03B–61 NO.17 COOLING SYSTEM CONCERNS-OVERHEATING [L3 WITH TC].)
19	Does the engine start with throttle close?	Yes	Go to the next step.
		No	Go to Step 25.
20	Perform the Variable Valve Timing Control System Operation Inspection. (See 01–03B–93 Variable Valve Timing Control System Operation Inspection.) Does the variable valve timing control system work properly?	Yes	Inspect the valve timing.
		No	Inspect or replace the malfunctioning parts, according to the inspection results.
21	Will the engine start and run smoothly at part throttle?	Yes	Go to the next step.
		No	Go to Step 23.
22	Perform the TP sweep inspection. (See 01–03B–85 Throttle position (TP) sweep inspection.) Does the electronic throttle control system work properly?	Yes	Visually inspect the throttle body (damaged/ scratching.) If normal, go to the next step.
		No	Inspect or replace the malfunctioning parts, according the to inspection results.
23	Access the RPM PID using the WDS or equivalent. Is the RPM PID indicating engine speed when the cranking engine.	Yes	Go to the next step.
		No	Inspect the CKP sensor for following; • Installation condition (See 01–40B–41 CRANKSHAFT POSITION (CKP) SENSOR REMOVAL/INSTALLATION [L3 WITH TC].) • Damaged trigger wheel and camshaft • Open or short circuit in wiring harnesses Is there any malfunction detected?

STEP	INSPECTION	RESULTS	ACTION
24	Inspect CMP sensor for the following; • Installation condition (See 01–40B–38 CAMSHAFT POSITION (CMP) SENSOR REMOVAL/INSTALLATION [L3 WITH TC].) • Damaged trigger wheel and camshaft • Open or short circuit in wiring harnesses Is there any malfunction detected?	Yes	Repair or replace the malfunctioning part according inspection results.
		No	Go to the next step.
25	Perform the EGR system operation inspection. (See 01–03B–90 EGR Control System Inspection.) Does EGR system operate properly?	Yes	Go to the next step.
		No	Inspect or replace the malfunctioning parts, according to the inspection results.
26	Perform the Purge Control System Operation inspection. (See 01–03B–91 Purge Control System Inspection.) Does the purge solenoid valve work properly?	Yes	Go to the next step.
		No	Inspect or replace the malfunctioning parts, according to the inspection results.
27	Access and monitor the following PIDs using the data monitor function. • ECT • APP • MAF • O2S11 • O2S12 • LONGFT1 • SHTFT1 Do the PIDs indicate the correct values under the malfunction condition? (See 01–40B–6 Using the WDS or Equivalent.)	Yes	Go to the next step.
		No	Inspect and repair or replace suspected parts and the related harnesses. If the malfunction remains, perform the intermittent concern troubleshooting procedure. (See 01–03B–6 INTERMITTENT CONCERN TROUBLESHOOTING [L3 WITH TC].)
28	Inspect for restriction in the exhaust system and three-way catalytic converter (TWC). Is there any restriction?	Yes	Replace malfunctioning part.
		No	Go to the next step.
29	Remove and shake the PCV valve. Does the PCV valve rattle?	Yes	Go to the next step.
		No	Replace the PCV valve.
30	Perform the spark test. (See 01–03B–90 Spark Test.) Is a strong blue spark visible at each cylinder?	Yes	Go to the next step.
		No	Inspect or replace the malfunctioning parts, according to the inspection results.
31	Access and monitor the FUEL_PRES PID. Is the FUEL_PRES PID value within the specification? (See 01–40B–6 Using the WDS or Equivalent.)	Yes	Go to Step 38.
		No	Go to the next step.
32	Replace the high pressure fuel pump. MOnitor FUEL_PRES PID. Is the FUEL_PRES PID value within the specified? (See 01–40B–6 Using the WDS or Equivalent.)	Yes	Troubleshooting is completed. Go to Step 37.
		No	Go to the next step.
33	Inspect the fuel pressure sensor. (See 01–40B–34 FUEL PRESSURE SENSOR INSPECTION [L3 WITH TC].) Is the fuel pressure sensor normal?	Yes	Go to the next step.
		No	Replace the delivery pipe.
34	Connect the fuel pressure gauge between the fuel pump and the high pressure fuel pump. Measure the fuel pressure line of the low pressure side. (See 01–14B–5 FUEL LINE PRESSURE INSPECTION [L3 WITH TC].) Is the fuel pressure within the specification?	Yes	Go to the next step.
		No	Inspect for the following: • Fuel line restriction • Fuel filter clogging If normal, replace the fuel pump.
35	Inspect the fuel injector for each cylinder. (See 01–14B–29 FUEL INJECTOR INSPECTION [L3 WITH TC].) Are the fuel injectors normal?	Yes	Go to the next step.
		No	Replace the suspected fuel injector. (See 01–14B–25 FUEL INJECTOR REMOVAL/ INSTALLATION [L3 WITH TC].)

STEP	INSPECTION	RESULTS	ACTION
36	Measure the compression pressure for each cylinder. (See 01–10B–9 COMPRESSION INSPECTION [L3 WITH TC].) Are the compression pressures within the specification?	Yes	Replace the injector driver module. If the problem remains, overhaul the engine.
		No	Inspect for the following: • Damaged valve seat • Worn valve stem and valve guide • Worn or stuck piston ring • Worn piston, piston ring or cylinder • Improper valve timing Service if necessary.
37	Verify test results. • If normal, return to the diagnostic index to service any additional symptoms. • If a malfunction remains, inspect the related Service Bulletins and/or On-line Repair Information and perform the repair or diagnosis. — If the vehicle is repaired, troubleshooting is completed. — If the vehicle is not repaired or additional diagnostic information is not available, reprogram the PCM if a later calibration is available. Retest.		

NO.7 SLOW RETURN TO IDLE [L3 WITH TC]

E6U010318881W86

7	SLOW RETURN TO IDLE
DESCRIPTION	• Engine takes more time than normal to return to idle speed. • Engine speed continues at fast idle after warm-up
POSSIBLE CAUSE	• ECT sensor or related circuit malfunction • Thermostat is stuck open • Fuel injection timing is incorrect • Erratic signal from CKP sensor • Erratic signal from CMP sensor • Accelerator position sensor or related circuit malfunction • Air suction in intake-air system • MAF sensor or related circuit malfunction • Fuel pressure sensor or related circuit malfunction • Excessive fuel pressure • Relief valve malfunction (built-in delivery pipe) • Fuel injector malfunction • Cooling fan control system malfunction • Improper load signal input • Injector driver module or related circuit malfunction **Warning** **The following troubleshooting flow chart contains the fuel system diagnosis and repair procedures. Read the following warnings before performing the fuel system services:** • **Fuel vapor is hazardous. It can easily ignite, causing serious injury and damage. Always keep sparks and flames away from fuel.** • **Fuel line spills and leakage are dangerous. Fuel can ignite and cause serious injury or death and damage. Fuel can also irritate skin and eyes. To prevent this, always complete "BEFORE REPAIR ROCEDURE" and "AFTER REPAIR PROCEDURE" described in this manual.** **(See 01–14B–4 BEFORE REPAIR PROCEDURE [L3 WITH TC].)** **(See 01–14B–5 AFTER REPAIR PROCEDURE [L3 WITH TC].)** **Caution** • **Disconnecting/connecting the quick release connector without cleaning it may possibly cause damage to the fuel pipe and quick release connector. Always clean the quick release connector joint area before disconnecting/connecting, and make sure that it is free of foreign material.**

Diagnostic procedure

STEP	INSPECTION	RESULTS	ACTION
1	Inspect air suction in intake-air system components while racing engine to higher speed. Is any air suction?	Yes	Repair or replace as necessary.
		No	Go to the next step.
2	Perform the self-test function using the WDS or equivalent. Turn the ignition switch to the ON position. Retrieve any DTCs. Is a DTC displayed?	Yes	**DTC is displayed:** Go to the appropriate DTC test.
		No	**No DTC is displayed:** Go to the next step.
3	Access the ECT PID. Start and warm-up engine to normal operating temperature. Is the ECT PID reading **below 82°C {180°F}?**	Yes	Go to the next step.
		No	Go to symptom troubleshooting "NO.18 COOLING SYSTEM CONCERNS, RUNS COLD". (See 01–03B–63 NO.18 COOLING SYSTEM CONCERNS-RUNS COLD [L3 WITH TC].)
4	Verify the cooling fan operation. Does the cooling fan operate properly according ECT PID value?	Yes	Go to the next step.
		No	Perform the Cooling Fan Control System Operation Inspection. (See 01–03B–92 Cooling Fan Control System Inspection.)
5	Inspect CMP and CKP sensor for the following; • Installation condition (See 01–40B–38 CAMSHAFT POSITION (CMP) SENSOR REMOVAL/INSTALLATION [L3 WITH TC].) (See 01–40B–41 CRANKSHAFT POSITION (CKP) SENSOR REMOVAL/INSTALLATION [L3 WITH TC].) • Damaged trigger wheel and camshaft • Open or short circuit in the wiring harnesses. Is there any malfunction detected?	Yes	Repair or replace the malfunctioning part according inspection results.
		No	Go to the next step.
6	Access and monitor following the PIDs using the data monitor function. • ECT • APP • MAF • CPP (PCM terminal 1H) • PNP (PCM terminal 1W) • PSP (PCM terminal 1Z) Do the PIDs indicate the correct values under trouble condition? (See 01–40B–6 Using the WDS or Equivalent.)	Yes	Go to the next step.
		No	Inspect and repair or replace suspected parts and the related harnesses. If the malfunction remains, perform the intermittent concern troubleshooting procedure. (See 01–03B–6 INTERMITTENT CONCERN TROUBLESHOOTING [L3 WITH TC].)
7	Access and monitor the FUEL_PRES PID. Is the FUEL_PRES PID value within the specification? (See 01–40B–6 Using the WDS or Equivalent.)	Yes	Go to Step 11.
		No	Go to the next step.
8	Is the vehicle accelerate performance normally?	Yes	Go to the next step.
		No	Go to Step 10.
9	Inspect the fuel pressure sensor. (See 01–40B–34 FUEL PRESSURE SENSOR INSPECTION [L3 WITH TC].) Is the fuel pressure sensor normal?	Yes	Go to Step 11.
		No	Replace the delivery pipe.
10	Replace the high pressure fuel pump. Monitor FUEL_PRES PID. Is the FUEL_PRES PID value within the specified? (See 01–40B–6 Using the WDS or Equivalent.)	Yes	Troubleshooting is completed. Go to Step 13.
		No	Go to the next step.
11	Inspect the fuel injector for each cylinder. (See 01–14B–29 FUEL INJECTOR INSPECTION [L3 WITH TC].) Are fuel injectors normal?	Yes	Go to the next step.
		No	Replace the suspected fuel injector. (See 01–14B–25 FUEL INJECTOR REMOVAL/INSTALLATION [L3 WITH TC].)

STEP	INSPECTION	RESULTS	ACTION
12	Remove the thermostat and inspection operation. (See 01–12B–7 THERMOSTAT REMOVAL/ INSTALLATION [L3 WITH TC].) (See 01–12B–7 THERMOSTAT INSPECTION [L3 WITH TC].) Is the thermostat normal?	Yes	Inspect and repair or replace the throttle body. If throttle body is normal or the problem remains, replace the injector driver module.
		No	Replace thermostat.
13	Verify test results. • If normal, return to the diagnostic index to service any additional symptoms. • If a malfunction remains, inspect the related Service Bulletins and/or On-line Repair Information and perform the repair or diagnosis. — If the vehicle is repaired, troubleshooting is completed. — If the vehicle is not repaired or additional diagnostic information is not available, reprogram the PCM if a later calibration is available. Retest.		

NO.8 ENGINE RUNS ROUGH/ROLLING IDLE [L3 WITH TC]

E6U010318881W87

8	ENGINE RUNS ROUGH/ROLLING IDLE
DESCRIPTION	• Engine speed fluctuates between the specified idle speed and lower speed and, engine shakes excessively. • Idle speed is too slow and the engine shakes excessively.
POSSIBLE CAUSE	• Air leakage from intake-air system • A/C system improper operation • Erratic signal to ignition coil • Spark plug malfunction • Purge solenoid valve malfunction • Improper operation of electronic throttle control system • EGR valve malfunction • Low engine compression or excessive unbalance for each cylinder • Improper valve timing • Improper variable valve timing control system • Poor fuel quality • PCV valve malfunction • Intake-air system restriction • Exhaust system or three-way catalytic converter (TWC) restriction or clogging • Disconnected electrical connectors • Inadequate fuel pressure (high or low pressure side) • Fuel pressure sensor or related circuit malfunction • Spill valve control solenoid valve malfunction (built-in high pressure fuel pump) • Relief valve malfunction (built-in delivery pipe) • Fuel pump (low-side) body mechanical malfunction • Fuel filter restriction or clogging • Fuel leakage • Incorrect fuel injection timing • Unbalanced fuel injection amount for each cylinder • High pressure fuel pump malfunction • Fuel injector malfunction • Erratic signal from CKP sensor • Erratic or no signal from CMP sensor • ECT sensor or related circuit malfunction • Manifold absolute pressure (MAP) sensor or related circuit malfunction • Accelerator position sensor or related circuit malfunction • MAF sensor malfunction • Incorrect or no load signal input • Engine overheating • Vacuum leakage • Injector driver module or related circuit malfunction **Warning** **The following troubleshooting flow chart contains the fuel system diagnosis and repair procedures. Read the following warnings before performing the fuel system services:** • **Fuel vapor is hazardous. It can easily ignite, causing serious injury and damage. Always keep sparks and flames away from fuel.** • **Fuel line spills and leakage are dangerous. Fuel can ignite and cause serious injury or death and damage. Fuel can also irritate skin and eyes. To prevent this, always complete "BEFORE REPAIR ROCEDURE" and "AFTER REPAIR PROCEDURE" described in this manual.** **(See 01–14B–4 BEFORE REPAIR PROCEDURE [L3 WITH TC].)** **(See 01–14B–5 AFTER REPAIR PROCEDURE [L3 WITH TC].)** **Caution** • **Disconnecting/connecting the quick release connector without cleaning it may possibly cause damage to the fuel pipe and quick release connector. Always clean the quick release connector joint area before disconnecting/connecting, and make sure that it is free of foreign material.**

Diagnostic procedure

STEP	INSPECTION	RESULTS	ACTION
1	Inspect for the following: • Fuel quality (proper octane, contamination, winter/summer blend) • Intake-air system restriction or leakage • Electrical connectors connection • Fuel leakage in fuel system • Vacuum leakage Are all items normal?	Yes	Go to the next step.
		No	Service if necessary. Repeat Step 1.
2	Perform the self-test function using the WDS or equivalent. Turn the ignition switch to the ON position. Retrieve any DTCs. Is a DTC displayed?	Yes	**DTC is displayed:** Go to the appropriate DTC test. (See 01–02B–14 DTC TABLE [L3 WITH TC].)
		No	**No DTC is displayed:** Go to the next step.
3	Access the ECT PID. Verify that the ECT PID is **less than 116°C {241°F}** during driving. Is the ECT PID less than specified?	Yes	Go to the next step.
		No	The cause of this concern could be from the cooling system overheating. Perform the symptom troubleshooting "NO.17 COOLING SYSTEM CONCERNS - OVERHEATING." (See 01–03B–61 NO.17 COOLING SYSTEM CONCERNS-OVERHEATING [L3 WITH TC].)
4	Perform the A/C Cut-off Operation Inspection. (See 01–03B–92 A/C Cut-off Control System Inspection.) Does the A/C Cut-off Operation work properly?	Yes	Go to the next step.
		No	Repair or replace the malfunctioning parts according to inspection results.
5	Perform the EGR system operation inspection. (See 01–03B–90 EGR Control System Inspection.) Does the EGR system operate properly?	Yes	Go to the next step.
		No	Inspect or replace the malfunctioning parts, according to the inspection results.
6	Perform the TP sweep inspection. (See 01–03B–85 Throttle position (TP) sweep inspection.) Does the electronic throttle control system work properly?	Yes	Visually inspect the throttle body (damaged/ scratching.) If normal, go to the next step.
		No	Inspect or replace the malfunctioning parts, according the to inspection results.
7	Perform the Purge Control System Operation inspection. (See 01–03B–91 Purge Control System Inspection.) Does the purge solenoid valve work properly?	Yes	Go to the next step.
		No	Inspect or replace the malfunctioning parts, according to the inspection results.
8	Perform the Variable Valve Timing Control System Operation Inspection. (See 01–03B–93 Variable Valve Timing Control System Operation Inspection.) Does the variable valve timing control system work properly?	Yes	Go to the next step.
		No	Inspect or replace the malfunctioning parts, according to the inspection results.
9	Inspect CMP and CKP sensor for the following; • Installation condition (See 01–40B–38 CAMSHAFT POSITION (CMP) SENSOR REMOVAL/INSTALLATION [L3 WITH TC].) (See 01–40B–41 CRANKSHAFT POSITION (CKP) SENSOR REMOVAL/INSTALLATION [L3 WITH TC].) • Damaged trigger wheel and camshaft • Open or short circuit in the wiring harnesses. Is there any malfunction detected?	Yes	Repair or replace the malfunctioning part according to the inspection results.
		No	Go to the next step.

STEP	INSPECTION	RESULTS	ACTION
10	Connect the WDS or equivalent to the DLC-2. Access and monitor following PIDs using the data monitor function. • ACSW • APP • ECT • MAF • MAP • CPP (PCM terminal 1H) • PNP (PCM terminal 1W) • PSP (PCM terminal 1Z) Do the PIDs indicate the correct values under trouble condition? (See 01–40B–6 Using the WDS or Equivalent.)	Yes	Go to the next step.
		No	Inspect and repair or replace suspected parts and the related harnesses. If the malfunction remains, perform the intermittent concern troubleshooting procedure. (See 01–03B–6 INTERMITTENT CONCERN TROUBLESHOOTING [L3 WITH TC].)
11	Inspect for restriction in the exhaust system and three-way catalytic converter (TWC). Is there any restriction?	Yes	Replace the malfunctioning part.
		No	Go to the next step.
12	Remove and shake the PCV valve. Does the PCV valve rattle?	Yes	Go to the next step.
		No	Replace the PCV valve.
13	Perform the spark test. (See 01–03B–90 Spark Test.) Is a strong blue spark visible at each cylinder?	Yes	Go to the next step.
		No	Inspect or replace the malfunctioning parts, according to the inspection results.
14	Access and monitor the FUEL_PRES PID. Is the FUEL_PRES PID value within the specification? (See 01–40B–6 Using the WDS or Equivalent.)	Yes	Go to Step 18.
		No	Go to the next step.
15	Is the vehicle accelerate performance normally?	Yes	Go to the next step.
		No	Go to Step 17.
16	Inspect the fuel pressure sensor. (See 01–40B–34 FUEL PRESSURE SENSOR INSPECTION [L3 WITH TC].) Is the fuel pressure sensor normal?	Yes	Go to Step 18.
		No	Replace the delivery pipe.
17	Replace the high pressure fuel pump. Monitor FUEL_PRES PID. Is the FUEL_PRES PID value within the specified? (See 01–40B–6 Using the WDS or Equivalent.)	Yes	Troubleshooting is completed. Go to Step 21.
		No	Go to the next step.
18	Connect the fuel pressure gauge between the fuel pump and the high pressure fuel pump. Measure the fuel pressure line of the low pressure side. (See 01–14B–5 FUEL LINE PRESSURE INSPECTION [L3 WITH TC].) Is the fuel pressure within the specification?	Yes	Go to the next step.
		No	Inspect for the following: • Fuel line restriction • Fuel filter clogging If normal replace the fuel pump.
19	Inspect fuel injector for each cylinder. (See 01–14B–29 FUEL INJECTOR INSPECTION [L3 WITH TC].) Are the fuel injectors normal?	Yes	Go to the next step.
		No	Replace the suspected fuel injector. (See 01–14B–25 FUEL INJECTOR REMOVAL/ INSTALLATION [L3 WITH TC].)
20	Measure the compression pressure for each cylinder. (See 01–10B–9 COMPRESSION INSPECTION [L3 WITH TC].) Are compression pressures within the specification?	Yes	Replace the injector driver module. If the problem remains, overhaul the engine.
		No	Inspect for the following: • Damaged valve seat • Worn valve stem and valve guide • Worn or stuck piston ring • Worn piston, piston ring or cylinder • Improper valve timing Service if necessary.
21	Verify test results. • If normal, return to the diagnostic index to service any additional symptoms. • If a malfunction remains, inspect the related Service Bulletins and/or On-line Repair Information and perform the repair or diagnosis. — If the vehicle is repaired, troubleshooting is completed. — If the vehicle is not repaired or additional diagnostic information is not available, reprogram the PCM if a later calibration is available. Retest.		

NO.9 FAST IDLE/RUNS ON [L3 WITH TC]

E6U010318881W88

9	FAST IDLE/RUNS ON
)ESCRIPTION	• Engine speed continues at fast idle after warm-up. • Engine runs after the ignition switch is turned off.
POSSIBLE CAUSE	• ECT sensor or related circuit malfunction • Suction control valve (built-in high pressure fuel pump) • Fuel injector malfunction • Air leakage from intake-air system • Throttle body malfunction • Accelerator pedal position sensor or related circuit malfunction • Cruise control system operation improperly • Improper load signal input • Improper operation of electric throttle control system • Injector driver module or related circuit malfunction **Warning** **The following troubleshooting flow chart contains the fuel system diagnosis and repair procedures. Read the following warnings before performing the fuel system services:** **• Fuel vapor is hazardous. It can easily ignite, causing serious injury and damage. Always keep sparks and flames away from fuel.** **• Fuel line spills and leakage are dangerous. Fuel can ignite and cause serious injury or death and damage. Fuel can also irritate skin and eyes. To prevent this, always complete "BEFORE REPAIR ROCEDURE" and "AFTER REPAIR PROCEDURE" described in this manual.** **(See 01–14B–4 BEFORE REPAIR PROCEDURE [L3 WITH TC].)** **(See 01–14B–5 AFTER REPAIR PROCEDURE [L3 WITH TC].)** **Caution** **• Disconnecting/connecting the quick release connector without cleaning it may possibly cause damage to the fuel pipe and quick release connector. Always clean the quick release connector joint area before disconnecting/connecting, and make sure that it is free of foreign material.**

Diagnostic procedure

STEP	INSPECTION	RESULTS	ACTION
1	Connect the WDS or equivalent to the DLC. Access the ECT PID. Start and warm-up engine to normal operating temperature. Is ECT PID reading between **82—112 °C {180—234 °F}?**	Yes	Go to the next step.
		No	**ECT PID is higher than 112 °C {234 °F}:** Go to symptom troubleshooting "NO.17 COOLING SYSTEM CONCERNS - OVERHEATING". **ECT PID is less than 82 °C {180 °F}** Go to symptom troubleshooting "NO.18 COOLING SYSTEM CONCERNS - RUNS COLD".
2	Perform the self-test function using the WDS or equivalent. Turn the ignition switch to the ON position. Retrieve any DTCs. Is a DTC displayed?	Yes	**DTC is displayed:** Go to the appropriate DTC test. (See 01–02B–14 DTC TABLE [L3 WITH TC].)
		No	**No DTC is displayed:** Go to the next step.
3	Inspect for leakage in intake-air system. Is there any leakage found?	Yes	Repair or replace for leakage.
		No	Go to the next step.
4	Perform the TP sweep inspection. (See 01–03B–85 Throttle position (TP) sweep inspection.) Does the electronic throttle control system work properly?	Yes	Visually inspect the throttle body (damaged/scratching.) If normal, go to the next step.
		No	Inspect or replace the malfunctioning parts, according to the inspection results.
5	Connect the WDS or equivalent to the DLC-2. Access and monitor the following PIDs using the data monitor function. • ECT • APP • ACSW • CPP (PCM terminal 1H) • PNP (PCM terminal 1W) • PSP (PCM terminal 1Z) Do the PIDs indicate the correct values under trouble condition? (See 01–40B–6 Using the WDS or Equivalent.)	Yes	Go to the next step.
		No	Inspect and repair or replace suspected parts and the related harnesses. If the malfunction remains, perform the intermittent concern troubleshooting. (See 01–03B–6 INTERMITTENT CONCERN TROUBLESHOOTING [L3 WITH TC].)
6	Inspect the high pressure fuel pump. (See 01–14B–20 HIGH PRESSURE FUEL PUMP INSPECTION [L3 WITH TC].) Is the high pressure fuel pump normal?	Yes	Go to the next step.
		No	Replace the high pressure fuel pump.
7	Inspect the fuel injector for each cylinder. (See 01–14B–29 FUEL INJECTOR INSPECTION [L3 WITH TC].) Are fuel injectors normal?	Yes	Go to the next step.
		No	Replace the suspected fuel injector. (See 01–14B–25 FUEL INJECTOR REMOVAL/INSTALLATION [L3 WITH TC].)
8	Inspect the operation of cruise control system. Does the cruise control system work properly?	Yes	Inspect and repair or replace the injector driver module or related circuit.
		No	Repair or replace the malfunctioning part according to inspection results.
9	Verify test results. • If normal, return to the diagnostic index to service any additional symptoms. • If a malfunction remains, inspect the related Service Bulletins and/or On-line Repair Information and perform the repair or diagnosis. — If the vehicle is repaired, troubleshooting is completed. — If the vehicle is not repaired or additional diagnostic information is not available, reprogram the PCM if a later calibration is available. Retest.		

NO.10 LOW IDLE/STALLS DURING DECELERATION [L3 WITH TC]

E6U010318881W89

10	LOW IDLE/STALLS DURING DECELERATION
DESCRIPTION	• Engine stops unexpectedly at beginning of deceleration or recovery from deceleration.
POSSIBLE CAUSE	• Poor fuel quality • Vacuum leakage • Improper operation of electronic throttle control system • Air leakage from intake-air system • Intake-air system restriction • EVAP control system malfunction • Improper air/fuel mixture ratio control • Erratic signal from CKP sensor • Erratic signal from CMP sensor • Accelerator position sensor or related circuit malfunction • TP sensor or related circuit malfunction • MAF sensor or related circuit malfunction • Front and/or rear HO2S sensor or related circuit malfunction • Brake switch or related circuit malfunction • Neutral or clutch switch malfunction or related circuit malfunction • Improper A/C magnetic clutch operation • Inadequate fuel pressure (high or low pressure side) • Suction control valve malfunction (built-in high pressure fuel pump) • Relief valve malfunction (built-in delivery pipe) • Fuel leakage • Fuel line restriction • Fuel filter clogging • Incorrect fuel injection timing • High pressure fuel pump malfunction • Fuel injector malfunction • Low engine compression • Improper valve timing • EGR system malfunction • Vacuum leakage • ECT sensor or related circuit malfunction • Fuel pressure sensor or related circuit malfunction • Injector driver module or related circuit malfunction **Warning** **The following troubleshooting flow chart contains the fuel system diagnosis and repair procedures. Read the following warnings before performing the fuel system services:** • **Fuel vapor is hazardous. It can easily ignite, causing serious injury and damage. Always keep sparks and flames away from fuel.** • **Fuel line spills and leakage are dangerous. Fuel can ignite and cause serious injury or death and damage. Fuel can also irritate skin and eyes. To prevent this, always complete "BEFORE REPAIR ROCEDURE" and "AFTER REPAIR PROCEDURE" described in this manual.** **(See 01–14B–4 BEFORE REPAIR PROCEDURE [L3 WITH TC].)** **(See 01–14B–5 AFTER REPAIR PROCEDURE [L3 WITH TC].)** **Caution** • **Disconnecting/connecting the quick release connector without cleaning it may possibly cause damage to the fuel pipe and quick release connector. Always clean the quick release connector joint area before disconnecting/connecting, and make sure that it is free of foreign material.**

Diagnostic procedure

STEP	INSPECTION	RESULTS	ACTION
1	Does the engine idle rough?	Yes	Go to symptom troubleshooting "NO.8 ENGINE RUNS ROUGH/ROLLING IDLE". (See 01–03B–36 NO.8 ENGINE RUNS ROUGH/ ROLLING IDLE [L3 WITH TC].)
		No	Go to the next step.
2	Verify the following: • Fuel quality (proper octane, contamination, winter/summer blend) • Intake-air system restriction or leakage • Fuel leakage in fuel system • Vacuum leakage Are all items normal?	Yes	Go to the next step.
		No	Service if necessary. Repeat Step 2.

STEP	INSPECTION	RESULTS	ACTION
3	Inspect CMP and CKP sensor for the following; • Installation condition (See 01–40B–38 CAMSHAFT POSITION (CMP) SENSOR REMOVAL/INSTALLATION [L3 WITH TC].) (See 01–40B–41 CRANKSHAFT POSITION (CKP) SENSOR REMOVAL/INSTALLATION [L3 WITH TC].) • Damaged trigger wheel and camshaft • Open or short circuit in the wiring harnesses Is there any malfunction detected?	Yes	Repair or replace the malfunctioning part according inspection results.
		No	Go to the next step.
4	Perform the self-test function using the WDS or equivalent. Turn the ignition switch to the ON position. Retrieve any DTCs. Is a DTC displayed?	Yes	**DTC is displayed:** Go to the appropriate DTC test. (See 01–02B–14 DTC TABLE [L3 WITH TC].)
		No	**No DTC is displayed:** Go to the next step.
5	Connect the WDS or equivalent to the DLC-2. Access and monitor the following PIDs using the data monitor function. • ACSW • APP • BOO • ECT • MAF • TP • O2S11 • O2S12 • LONGFT1 • SHTFT1 • PSP (PCM terminal 1Z) • CPP (PCM terminal 1H) • PNP (PCM terminal 1W) Do the PIDs indicate the correct values under trouble condition? (See 01–40B–6 Using the WDS or Equivalent.)	Yes	Go to the next step.
		No	Inspect and repair or replace suspected parts and the related harnesses. If the malfunction remains, perform the intermittent concern troubleshooting procedure. (See 01–03B–6 INTERMITTENT CONCERN TROUBLESHOOTING [L3 WITH TC].)
6	Perform the EGR system operation inspection. (See 01–03B–90 EGR Control System Inspection.) Does the EGR system operate properly?	Yes	Go to the next step.
		No	Inspect or replace the malfunctioning parts, according to the inspection results.
7	Perform the TP sweep inspection. (See 01–03B–85 Throttle position (TP) sweep inspection.) Does the electronic throttle control system work properly?	Yes	Visually inspect the throttle body (damaged/ scratching.) If normal, go to the next step.
		No	Inspect or replace the malfunctioning parts, according to the inspection results.
8	Perform the Purge Control System Operation inspection. (See 01–03B–91 Purge Control System Inspection.) Does the purge solenoid valve work properly?	Yes	Go to the next step.
		No	Inspect or replace the malfunctioning parts, according to the inspection results.
9	Perform the A/C Cut-off Operation Inspection. (See 01–03B–92 A/C Cut-off Control System Inspection.) Does the A/C Cut-off Operation work properly?	Yes	Go to the next step.
		No	Repair or replace the malfunctioning parts according to inspection results.
10	Access and monitor the FUEL_PRES PID. Is the FUEL_PRES PID value within the specification? (See 01–40B–6 Using the WDS or Equivalent.)	Yes	Go to Step 14.
		No	Go to the next step.
11	Is the vehicle accelerate performance normally?	Yes	Go to the next step.
		No	Go to Step 14.
12	Inspect the fuel pressure sensor. (See 01–40B–34 FUEL PRESSURE SENSOR INSPECTION [L3 WITH TC].) Is the fuel pressure sensor normal?	Yes	Go to Step 14.
		No	Replace the delivery pipe.

STEP	INSPECTION	RESULTS	ACTION
13	Replace the high pressure fuel pump Monitor FUEL_PRES PID. Is the FUEL_PRES PID value within the specified? (See 01–40B–6 Using the WDS or Equivalent.)	Yes	Troubleshooting is completed. Go to the Step 17.
		No	Go to the next step.
14	Connect the fuel pressure gauge between the fuel pump and the high pressure fuel pump. Measure the fuel pressure line of the low pressure side. (See 01–14B–5 FUEL LINE PRESSURE INSPECTION [L3 WITH TC].) Is the fuel pressure within the specification?	Yes	Go to the next step.
		No	Inspect for the following: • Fuel line restriction • Fuel filter clogging If normal replace the fuel pump.
15	Inspect the fuel injector for each cylinder. (See 01–14B–29 FUEL INJECTOR INSPECTION [L3 WITH TC].) Are fuel injectors normal?	Yes	Go to the next step.
		No	Replace the suspected fuel injector. (See 01–14B–25 FUEL INJECTOR REMOVAL/ INSTALLATION [L3 WITH TC].)
16	Measure the compression pressure for each cylinder. (See 01–10B–9 COMPRESSION INSPECTION [L3 WITH TC].) Are compression pressures within the specification?	Yes	Replace the injector driver module. If the problem remains, overhaul the engine.
		No	Inspect for the following: • Damaged valve seat • Worn valve stem and valve guide • Worn or stuck piston ring • Worn piston, piston ring or cylinder • Improper valve timing Service if necessary.
17	Verify test results. • If normal, return to the diagnostic index to service any additional symptoms. • If a malfunction remains, inspect the related Service Bulletins and/or On-line Repair Information and perform the repair or diagnosis. — If the vehicle is repaired, troubleshooting is completed. — If the vehicle is not repaired or additional diagnostic information is not available, reprogram the PCM if a later calibration is available. Retest.		

NO.11 ENGINE STALLS/QUITS, ENGINE RUNS ROUGH, MISSES, BUCK/JERK, HESITATION/STUMBLE, SURGES [L3 WITH TC]

E6U010318881W90

11	**ENGINE STALLS/QUITS - ACCELERATION/CRUISE** **ENGINE RUNS ROUGH - ACCELERATION/CRUISE** **BUCK/JERK - ACCELERATION/CRUISE/DECELERATION** **HESITATION/STUMBLE - ACCELERATION** **SURGES - ACCELERATION/CRUISE**
DESCRIPTION	• Engine stops unexpectedly at beginning of acceleration or during cruise. • Engine stops unexpectedly while cruising. • Engine speed fluctuates during acceleration or cruising. • Engine misses during acceleration or cruising. • Vehicle bucks/jerks during acceleration, during or deceleration. • Momentary pause at beginning of acceleration or during acceleration • Momentary minor irregularity in engine output

11	**ENGINE STALLS/QUITS - ACCELERATION/CRUISE** **ENGINE RUNS ROUGH - ACCELERATION/CRUISE** **BUCK/JERK - ACCELERATION/CRUISE/DECELERATION** **HESITATION/STUMBLE - ACCELERATION** **SURGES - ACCELERATION/CRUISE**
POSSIBLE CAUSE	• A/C system improper operation • Air leakage from intake-air system • Intake-air system restriction • Purge solenoid valve malfunction • Improper operation of electronic throttle control system • EGR system malfunction • Low engine compression • Turbocharger malfunction • Improper operation of wastegate control system • Vacuum leakage • Poor fuel quality • Main relay intermittent malfunction • Throttle body malfunction • Engine overheating • Spark plug malfunction • Variable swirl system malfunction • Air cleaner restriction • PCV valve malfunction • Improper valve timing due to jumping out timing chain • Exhaust system and/or three-way catalytic converter restriction • Intermittent open or short circuit in fuel pump circuit • Incorrect fuel injection timing • Inadequate fuel pressure (high or low pressure side) • Fuel pressure sensor or related circuit malfunction • Suction control valve malfunction (built-in high pressure fuel pump) • Relief valve malfunction (built-in delivery pipe) • High pressure fuel pump malfunction • Fuel injector malfunction • Improper fuel pump speed control operation • Fuel pump mechanical malfunction • Fuel line restriction or clogging • Improper air/fuel mixture ratio control operation • Erratic or no signal from CMP sensor • Erratic signal from CKP sensor • Front and/or rear HO2S sensor or related circuit malfunction • Accelerator position sensor or related circuit malfunction • MAF sensor or related circuit malfunction • Neutral switch or related circuit malfunction • ECT sensor or related circuit malfunction • Manifold absolute pressure (MAP) sensor or related circuit malfunction • IAT sensor No.1 or related circuit malfunction • IAT sensor No.2 or related circuit malfunction • Intermittent open or short circuit MAF sensor, accelerator position sensor, TP sensor and VSS • Clutch slippage • Injector driver module or related circuit malfunction **Warning** **The following troubleshooting flow chart contains the fuel system diagnosis and repair procedures. Read the following warnings before performing the fuel system services:** • **Fuel vapor is hazardous. It can easily ignite, causing serious injury and damage. Always keep sparks and flames away from fuel.** • **Fuel line spills and leakage are dangerous. Fuel can ignite and cause serious injury or death and damage. Fuel can also irritate skin and eyes. To prevent this, always complete "BEFORE REPAIR ROCEDURE" and "AFTER REPAIR PROCEDURE" described in this manual.** **(See 01–14B–4 BEFORE REPAIR PROCEDURE [L3 WITH TC].)** **(See 01–14B–5 AFTER REPAIR PROCEDURE [L3 WITH TC].)** **Caution** • **Disconnecting/connecting the quick release connector without cleaning it may possibly cause damage to the fuel pipe and quick release connector. Always clean the quick release connector joint area before disconnecting/connecting, and make sure that it is free of foreign material.**

Diagnostic procedure

STEP	INSPECTION	RESULTS	ACTION
1	Inspect for the following: • Fuel quality (proper octane, contamination, winter/summer blend) • Air leakage from intake-air system • Intake-air system restriction • Air cleaner element • Clutch slippage • Fuel leakage from fuel line • Vacuum leakage Are all items normal?	Yes	Go to the next step.
		No	Service if necessary. Repeat Step 1.
2	Perform the self-test function using the WDS or equivalent. Turn the ignition switch to the ON position. Retrieve any DTCs. Is a DTC displayed?	Yes	**DTC is displayed:** Go to the appropriate DTC test. (See 01–02B–14 DTC TABLE [L3 WITH TC].)
		No	**No DTC is displayed:** Go to the next step.
3	Access the ECT PID. Verify that the ECT PID is **less than 116°C {241°F}** during driving. Is the ECT PID less than specified?	Yes	Go to the next step.
		No	The cause of this concern could be from the cooling system overheating. Perform the symptom troubleshooting "NO.17 COOLING SYSTEM CONCERNS - OVERHEATING." (See 01–03B–61 NO.17 COOLING SYSTEM CONCERNS-OVERHEATING [L3 WITH TC].)
4	Perform the Main Relay Operation Inspection with wiggle the related harness. (See 01–03B–84 Main Relay Operation Inspection.) Does the main relay operate properly?	Yes	Go to the next step.
		No	Repair or replace for the intermittent fault.
5	Inspect CMP and CKP sensor for the following; • Installation condition (See 01–40B–38 CAMSHAFT POSITION (CMP) SENSOR REMOVAL/INSTALLATION [L3 WITH TC].) (See 01–40B–41 CRANKSHAFT POSITION (CKP) SENSOR REMOVAL/INSTALLATION [L3 WITH TC].) • Damaged trigger wheel and camshaft • Open or short circuit in the wiring harnesses Is there any malfunction detected?	Yes	Repair or replace the malfunctioning part according to the inspection results.
		No	Go to the next step.
6	Connect the WDS or equivalent to DLC-2. Access and monitor following PIDs using the data monitor function while wiggle the harness and under trouble condition. • APP • ECT • MAF • IAT • IAT2 • MAP • FP • VSS • O2S11 • O2S12 • LONGFT1 • SHTFT1 • CPP (PCM terminal 1H) • PNP (PCM terminal 1W) Do the PIDs indicate correct values? (See 01–40B–6 Using the WDS or Equivalent.)	Yes	Go to the Step 13.
		No	Inspect and repair or replace suspected parts and related harnesses. If the malfunction remains, perform the intermittent concern troubleshooting. (See 01–03B–6 INTERMITTENT CONCERN TROUBLESHOOTING [L3 WITH TC].) If the MAP PID remains without specified, go to the next step.
7	Perform the EGR system operation inspection. (See 01–03B–90 EGR Control System Inspection.) Does EGR system operate properly?	Yes	Go to the next step.
		No	Inspect or replace the malfunctioning parts, according to the inspection results.
8	Perform the A/C Cut-off Operation Inspection. (See 01–03B–92 A/C Cut-off Control System Inspection.) Does the A/C Cut-off Operation work properly?	Yes	Go to the next step.
		No	Repair or replace malfunctioning parts, according to inspection results.

STEP	INSPECTION	RESULTS	ACTION
9	Perform the TP sweep inspection. (See 01–03B–85 Throttle position (TP) sweep inspection.) Does the electronic throttle control system work properly?	Yes	Visually inspect the throttle body (damaged/ scratching.) If normal, go to the next step.
		No	Inspect or replace the malfunctioning parts, accordin to the inspection results.
10	Perform the Variable Swirl Control System Operation Inspection. (See 01–03B–86 Variable Swirl System Operation Inspection.) Does the variable swirl system work properly?	Yes	Go to the next step.
		No	Inspect or replace the malfunctioning parts, according to the inspection results.
11	Perform the Purge Control System Operation Inspection. (See 01–03B–91 Purge Control System Inspection.) Does the purge control system work properly?	Yes	Go to the next step.
		No	Inspect or replace the malfunctioning parts, according to the inspection results.
12	Perform the Fuel Pump Speed Control Inspection. (See 01–03B–89 Fuel Pump Speed Control Inspection.) Does the fuel pump speed control work properly?	Yes	Go to the next step.
		No	Inspect or replace the malfunctioning parts, according to the inspection results.
13	Perform the Wastegate Control System Operation Inspection. (See 01–03B–93 Wastegate Control System Operation Inspection.) Does the wastegate control system work properly?	Yes	Go to the next step.
		No	Inspect or replace the malfunctioning parts, according to the inspection results.
14	Remove the parts necessary to inspect turbocharger without remove the turbocharger. Inspect if turbocharger compressor wheel is bent, damaged, or interfering with housing on vehicle. (See 01–13B–16 TURBOCHARGER INSPECTION [L3 WITH TC].) Is there any problem?	Yes	Replace the turbocharger.
		No	Go to the next step.
15	Inspect the turbocharger compressor wheel locknut is loose or has fallen down inside turbocharger. Is there any problem?	Yes	Replace the turbocharger.
		No	Go to the next step.
16	Inspect if turbocharger compressor wheel by hand. Does the wheel turn easily and smoothly?	Yes	Go to the next step.
		No	Replace the turbocharger.
17	Inspect the turbocharger turbine wheel is damaged, cracked or interfering with housing on vehicle. **Note** • Inspect all fins on each turbine wheel. Is there any problem?	Yes	Replace the turbocharger.
		No	Go to the next step.
18	Is any engine oil found inside turbocharger turbine housing?	Yes	**Excessive amount of oil is found:** Replace the turbocharger. **Small amount of oil is found:** Wipe oil out of vehicle, then go to the next step.
		No	Go to the next step.
19	Is any engine oil found inside turbocharger compressor housing?	Yes	Wipe oil out vehicle and install all removed parts in Step 14. Then, go to the next step.
		No	Turbocharger is normal. Install all parts removed in Step 14. Then, go to the next step.
20	Inspect for restriction in the exhaust system and three-way catalytic converter (TWC). Is there any restriction?	Yes	Replace the malfunctioning part.
		No	Go to the next step.
21	Remove and shake the PCV valve. Does the PCV valve rattle?	Yes	Go to the next step.
		No	Replace the PCV valve.

STEP	INSPECTION	RESULTS	ACTION
22	Perform the spark test. (See 01–03B–90 Spark Test.) Is a strong blue spark visible at each cylinder?	Yes	Go to the next step.
		No	Inspect or replace the malfunctioning parts, according to the inspection results.
23	Access and monitor the FUEL_PRES PID. Is the FUEL_PRES PID value within the specification? (See 01–40B–6 Using the WDS or Equivalent.)	Yes	Go to Step 27.
		No	Go to the next step.
24	Is the vehicle accelerate performance normally?	Yes	Go to the next step.
		No	Go to Step.26.
25	Inspect the fuel pressure sensor. (See 01–40B–34 FUEL PRESSURE SENSOR INSPECTION [L3 WITH TC].) Is the fuel pressure sensor normal?	Yes	Go to the Step 27.
		No	Replace the delivery pipe.
26	Replace the high pressure fuel pump. Monitor FUEL_PRES PID. Is the FUEL_PRES PID value within the specified? (See 01–40B–6 Using the WDS or Equivalent.)	Yes	Troubleshooting is completed. Go to Step 30.
		No	Go to the next step.
27	Connect the fuel pressure gauge between the fuel pump and the high pressure fuel pump. Measure the fuel pressure line of the low pressure side. (See 01–14B–5 FUEL LINE PRESSURE INSPECTION [L3 WITH TC].) Is the fuel pressure with in the specification?	Yes	Go to the next step.
		No	Inspect for the following: • Fuel line restriction • Fuel filter clogging If normal replace the fuel pump.
28	Inspect the fuel injector for each cylinder. (See 01–14B–29 FUEL INJECTOR INSPECTION [L3 WITH TC].) Are fuel injectors normal?	Yes	Go to the next step.
		No	Replace the suspected fuel injector. (See 01–14B–25 FUEL INJECTOR REMOVAL/ INSTALLATION [L3 WITH TC].)
29	Measure the compression pressure for each cylinder. (See 01–10B–9 COMPRESSION INSPECTION [L3 WITH TC].) Are compression pressures within the specification?	Yes	Replace the injector driver module. If the problem remains, overhaul the engine.
		No	Inspect for the following: • Damaged valve seat • Worn valve stem and valve guide • Worn or stuck piston ring • Worn piston, piston ring or cylinder • Improper valve timing Service if necessary.
30	Verify test results. • If normal, return to the diagnostic index to service any additional symptoms. • If a malfunction remains, inspect the related Service Bulletins and/or On-line Repair Information and perform the repair or diagnosis. — If the vehicle is repaired, troubleshooting is completed. — If the vehicle is not repaired or additional diagnostic information is not available, reprogram the PCM if a later calibration is available. Retest.		

NO.12 LACK/LOSS OF POWER-ACCELERATION/CRUISE [L3 WITH TC]

E6U010318881W91

12	LACK/LOSS OF POWER — ACCELERATION/CRUISE
DESCRIPTION	Performance is poor under load (e.g., powers down when climbing hills).
POSSIBLE CAUSE	• Improper A/C system operation • Improper operation of A/C cut-off control • Air leakage or restriction from intake-air system • Loose turbocharger compressor-to-intake manifold duct connecting • Turbocharger rotating assembly binding or dragging • Wastegate valve malfunction (stuck open) • Turbocharger malfunction • Charge air cooler malfunction • Variable swirl system malfunction • Improper operation of electronic throttle control system • Purge solenoid valve malfunction • EGR system malfunction • Brake dragging • Low engine compression • Poor fuel quality • Vacuum leakage • Incorrect signal to ignition coil • Spark plug malfunction • Engine overheating • Throttle body malfunction • Air cleaner restriction or dirty • PCV valve malfunction • Improper valve timing due to jumping out of timing chain • Improper operation of variable valve timing control system • Restriction in exhaust system or three-way catalytic converter (TWC) • Leakage at exhaust manifold or turbocharger mounting flange • Intermittent open or short fuel pump related circuit • Inadequate fuel pressure (high-or low pressure side) • Fuel pressure sensor or related circuit malfunction • Suction control valve or related circuit malfunction (built-in high pressure fuel pump) • Relief valve malfunction (built-in delivery pipe) • High pressure fuel pump malfunction • Improper fuel pump speed control operation • Fuel pump mechanical malfunction • Fuel line restriction or clogging • Fuel injector malfunction • Incorrect fuel injection timing • Erratic signal from CKP sensor • Erratic or no signal from CMP sensor • ECT sensor or related circuit malfunction • Manifold absolute pressure (MAP) sensor or related circuit malfunction • Accelerator position sensor or related circuit malfunction • MAF/IAT sensor or related circuit malfunction • IAT sensor No.2 or related circuit malfunction • Intermittent open or short circuit MAF sensor, accelerator position sensor, TP sensor and VSS • Clutch slippage • Injector driver module or related circuit malfunction **Warning** **The following troubleshooting flow chart contains the fuel system diagnosis and repair procedures. Read the following warnings before performing the fuel system services:** • **Fuel vapor is hazardous. It can easily ignite, causing serious injury and damage. Always keep sparks and flames away from fuel.** • **Fuel line spills and leakage are dangerous. Fuel can ignite and cause serious injury or death and damage. Fuel can also irritate skin and eyes. To prevent this, always complete "BEFORE REPAIR ROCEDURE" and "AFTER REPAIR PROCEDURE" described in this manual.** **(See 01–14B–4 BEFORE REPAIR PROCEDURE [L3 WITH TC].)** **(See 01–14B–5 AFTER REPAIR PROCEDURE [L3 WITH TC].)** **Caution** • **Disconnecting/connecting the quick release connector without cleaning it may possibly cause damage to the fuel pipe and quick release connector. Always clean the quick release connector joint area before disconnecting/connecting, and make sure that it is free of foreign material.**

Diagnostic procedure

STEP	INSPECTION	RESULTS	ACTION
1	Verify the following: • Fuel quality (proper octane, contamination, winter/summer blend) • Air cleaner restriction or dirty • Intake-air system restriction or leakage • Charge air cooler condition (restriction or damaged) • Turbocharger compressor-to-intake manifold duct loose connection • Leakage at exhaust manifold or turbocharger mounting flange • Vacuum leakage • Clutch slippage • Brake dragging Are all items normal?	Yes	Go to the next step.
		No	Service if necessary. Repeat Step 1.
2	Perform the self-test function using the WDS or equivalent. Turn the ignition switch to the ON position. Retrieve any DTCs. Is a DTC displayed?	Yes	**DTC is displayed:** Go to the appropriate DTC test. (See 01–02B–14 DTC TABLE [L3 WITH TC].)
		No	**No DTC is displayed:** Go to the next step.
3	Is the engine overheating?	Yes	Go to symptom troubleshooting "NO.17 COOLING SYSTEM CONCERN-OVERHEATING." (See 01–03B–61 NO.17 COOLING SYSTEM CONCERNS-OVERHEATING [L3 WITH TC].)
		No	Go to the next step.
4	Perform the EGR system operation inspection. (See 01–03B–90 EGR Control System Inspection.) Does the EGR system operate properly?	Yes	Go to the next step.
		No	Inspect or replace the malfunctioning parts, according to the inspection results.
5	Perform the A/C Cut-off Operation Inspection. (See 01–03B–92 A/C Cut-off Control System Inspection.) Does the A/C Cut-off Operation work properly?	Yes	Go to the next step.
		No	Repair or replace malfunctioning parts, according to the inspection results.
6	Perform the TP sweep inspection. (See 01–03B–85 Throttle position (TP) sweep inspection.) Does the variable swirl system work properly?	Yes	Visually inspect throttle body (damaged/scratching.) If normal, go to the next step.
		No	Inspect or replace the malfunctioning parts, according to the inspection results.
7	Perform the Variable Swirl Control System Operation Inspection. (See 01–03B–86 Variable Swirl System Operation Inspection.)	Yes	Go to the next step.
		No	Inspect or replace the malfunctioning parts, according to the inspection results.
8	Perform the Variable Valve Timing Control System Operation Inspection. (See 01–03B–93 Variable Valve Timing Control System Operation Inspection.) Does the variable valve timing control system work properly?	Yes	Go to the next step.
		No	Inspect or replace the malfunctioning parts, according to the inspection results.
9	Perform the Purge Control System Operation Inspection. (See 01–03B–91 Purge Control System Inspection.) Does the purge control system work properly?	Yes	Go to the next step.
		No	Inspect or replace the malfunctioning parts, according to the inspection results.
10	Perform Fuel Pump Speed Control Inspection. (See 01–03B–89 Fuel Pump Speed Control Inspection.) Does the fuel pump speed control work properly?	Yes	Go to the next step.
		No	Inspect or replace the malfunctioning parts, according to the inspection results.
11	Perform the Wastegate Control System Operation Inspection. (See 01–03B–93 Wastegate Control System Operation Inspection.) Does the wastegate control system work properly?	Yes	Go to the next step.
		No	Inspect or replace the malfunctioning parts, according to the inspection results.

STEP	INSPECTION	RESULTS	ACTION
12	Connect the WDS or equivalent to DLC-2. Access and monitor following PIDs using the data monitor function. • ECT • MAF • IAT • IAT2 • APP • TP • MAP • FP (Low side pressure line) • VSS Do the PIDs indicate correct values under trouble condition? (See 01–40B–6 Using the WDS or Equivalent.)	Yes	Go to the next step.
		No	Inspect and repair or replace suspected parts and related harnesses. If the malfunction remains, perform the intermittent concern troubleshooting procedure. (See 01–03B–6 INTERMITTENT CONCERN TROUBLESHOOTING [L3 WITH TC].)
13	Inspect CMP and CKP sensor for following; • Installation condition (See 01–40B–38 CAMSHAFT POSITION (CMP) SENSOR REMOVAL/INSTALLATION [L3 WITH TC].) (See 01–40B–41 CRANKSHAFT POSITION (CKP) SENSOR REMOVAL/INSTALLATION [L3 WITH TC].) • Damaged trigger wheel and camshaft • Open or short circuit in wiring harnesses Is there any malfunction detected?	Yes	Repair or replace the malfunctioning part according to the inspection results.
		No	Go to the next step.
14	Remove and shake PCV valve. Does the PCV valve rattle?	Yes	Go to the next step.
		No	Replace the PCV valve.
15	Inspect spark plug condition. Is spark plug wet, covered with carbon or grayish white?	Yes	Spark plug is wet or covered with carbon: Perform the Spark Test and repair or replace malfunctioning part according to inspection result. (See 01–03B–90 Spark Test.) Spark plug is grayish white: Go to Step 23.
		No	Install spark plugs on original cylinders. Go to the next step.
16	Inspect for restriction in exhaust system and three-way catalytic converter (TWC). Is there any restriction?	Yes	Replace malfunctioning part.
		No	Go to the next step.
17	Remove parts necessary to inspect turbocharger without remove the turbocharger. Inspect if turbocharger compressor wheel is bent, damaged, or interfering with housing on vehicle. (See 01–13B–16 TURBOCHARGER INSPECTION [L3 WITH TC].) Is there any problem?	Yes	Replace turbocharger.
		No	Go to the next step.
18	Inspect turbocharger compressor wheel locknut is loose or has fallen down inside turbocharger. Is there any problem?	Yes	Replace turbocharger.
		No	Go to the next step.
19	Inspect if turbocharger compressor wheel by hand. Does wheel turn easily and smoothly?	Yes	Go to the next step.
		No	Replace turbocharger.
20	Inspect turbocharger turbine wheel is damaged, cracked or interfering with housing on vehicle. **Note** • Inspect all fins on each turbine wheel. Is there any problem?	Yes	Replace turbocharger.
		No	Go to the next step.
21	Is any engine oil found inside turbocharger turbine housing?	Yes	Excessive amount of oil is found: Replace turbocharger. Small amount of oil is found: Wipe oil out of vehicle, then Go to the next step.
		No	Go to the next step.

STEP	INSPECTION	RESULTS	ACTION
22	Is any engine oil found inside turbocharger compressor housing?	Yes	Wipe oil out vehicle and install all removed parts in Step 16. Then, Go to the next step.
		No	Turbocharger is normal. Install all parts removed in Step 17. Then, Go to the next step.
23	Inspect for leakage in fuel line. Is there any fuel leakage found?	Yes	Repair or replace suspected part.
		No	Go to the next step.
24	Access and monitor FUEL_PRES PID. Is the FUEL_PRES PID value within the specification? (See 01–40B–6 Using the WDS or Equivalent.)	Yes	Go to Step 27.
		No	Go to the next step.
25	Replace the high pressure fuel pump. Monitor FUEL_PRES PID. Is the FUEL_PRES PID value within the specified? (See 01–40B–6 Using the WDS or Equivalent.)	Yes	Troubleshooting is completed. Go to Step 30.
		No	Go to the next step.
26	Inspect the fuel pressure sensor. (See 01–40B–34 FUEL PRESSURE SENSOR INSPECTION [L3 WITH TC].) Is the fuel pressure sensor normal?	Yes	Go to the next step.
		No	Replace the delivery pipe.
27	Connect the fuel pressure gauge between fuel pump and high pressure fuel pump. Measure the fuel pressure line of the low pressure side. (See 01–14B–5 FUEL LINE PRESSURE INSPECTION [L3 WITH TC].) Is the fuel pressure within the specification?	Yes	Go to the next step.
		No	Inspect for the following: • Fuel line restriction • Fuel filter clogging If normal replace the fuel pump.
28	Inspect fuel injector for each cylinder. (See 01–14B–29 FUEL INJECTOR INSPECTION [L3 WITH TC].) Are fuel injectors normal?	Yes	Go to the next step.
		No	Replace suspected fuel injector. (See 01–14B–25 FUEL INJECTOR REMOVAL/ INSTALLATION [L3 WITH TC].)
29	Measure compression pressure for each cylinder. (See 01–10B–9 COMPRESSION INSPECTION [L3 WITH TC].) Are compression pressures within the specification?	Yes	Replace the injector driver module. If the problem remains, overhaul the engine.
		No	Inspect for the following: • Damaged valve seat • Worn valve stem and valve guide • Worn or stuck piston ring • Worn piston, piston ring or cylinder • Improper valve timing Service if necessary.
30	Verify test results. • If normal, return to the diagnostic index to service any additional symptoms. • If a malfunction remains, inspect the related Service Bulletins and/or On-line Repair Information and perform the repair or diagnosis. — If the vehicle is repaired, troubleshooting is completed. — If the vehicle is not repaired or additional diagnostic information is not available, reprogram the PCM if a later calibration is available. Retest.		

NO.13 KNOCKING/PINGING [L3 WITH TC]

E6U010318881W92

13	KNOCKING/PINGING
DESCRIPTION	Sound is produced when air/fuel mixture is ignited by something other than a spark plug (e.g., hot spot in the combustion chamber).
POSSIBLE CAUSE	• Poor fuel quality • Engine overheating due to cooling system malfunction • Variable swirl valve stuck closed • Improper operation of electronic throttle system • Air leakage or restriction from intake-air system • ECT sensor or related circuit malfunction • MAF sensor or related circuit malfunction • IAT sensor No.1 or related circuit malfunction • IAT sensor No.2 or related circuit malfunction • Incorrect fuel injection timing or amount • Fuel injector malfunction • Knock sensor or related circuit malfunction • Ignition system malfunction • Erratic signal from CMP sensor • Inadequate engine compression • Inadequate fuel pressure (high-pressure side) • Manifold absolute pressure (MAP) sensor or related malfunction • Wastegate valve malfunction (stuck closed) • Charge air cooler malfunction • Fuel pressure sensor or related circuit malfunction • Accelerator position sensor or related circuit malfunction • Suction control valve malfunction (built-in high pressure fuel pump) • Exhaust system and/or three-way catalytic converter (TWC) restriction • EGR system malfunction **Warning** **The following troubleshooting flow chart contains the fuel system diagnosis and repair procedures. Read the following warnings before performing the fuel system services:** • **Fuel vapor is hazardous. It can easily ignite, causing serious injury and damage. Always keep sparks and flames away from fuel.** • **Fuel line spills and leakage are dangerous. Fuel can ignite and cause serious injury or death and damage. Fuel can also irritate skin and eyes. To prevent this, always complete "BEFORE REPAIR ROCEDURE" and "AFTER REPAIR PROCEDURE" described in this manual.** **(See 01–14B–4 BEFORE REPAIR PROCEDURE [L3 WITH TC].)** **(See 01–14B–5 AFTER REPAIR PROCEDURE [L3 WITH TC].)** **Caution** • **Disconnecting/connecting the quick release connector without cleaning it may possibly cause damage to the fuel pipe and quick release connector. Always clean the quick release connector joint area before disconnecting/connecting, and make sure that it is free of foreign material.**

Diagnostic procedure

STEP	INSPECTION	RESULTS	ACTION
1	Connect the WDS or equivalent to the DLC-2. Access the ECT PID. Verify that the ECT PID is less than 116°C {241°F} during driving. Is ECT PID less than specified?	Yes	Go to the next step.
		No	The cause of this concern could be from the cooling system overheating. Perform the symptom troubleshooting "NO.17 COOLING SYSTEM CONCERNS - OVERHEATING." (See 01–03B–61 NO.17 COOLING SYSTEM CONCERNS-OVERHEATING [L3 WITH TC].)
2	Inspect for the following: • Air leakage or restriction from intake-air system • Fuel quality (proper octane, contamination, winter/summer blend) • Exhaust system and/or three-way catalytic converter (TWC) restriction • Charge air cooler condition (restriction or damaged) Are all items normal?	Yes	Go to the next step.
		No	Service if necessary. Repeat Step 2.

STEP	INSPECTION	RESULTS	ACTION
3	Perform the self-test function using the WDS or equivalent. Turn the ignition switch to the ON position. Retrieve any DTCs. Is a DTC displayed?	Yes	**DTC is displayed:** Go to the appropriate DTC test. (See 01–02B–14 DTC TABLE [L3 WITH TC].)
		No	**No DTC is displayed:** Go to the next step.
4	Inspect the knock sensor. (See 01–40B–35 KNOCK SENSOR (KS) INSPECTION [L3 WITH TC].) Is the knock sensor normal?	Yes	Go to the next step.
		No	Replace the knock sensor. (See 01–40B–36 KNOCK SENSOR (KS) REMOVAL/INSTALLATION [L3 WITH TC]
5	Perform the EGR system operation inspection. (See 01–03B–90 EGR Control System Inspection.) Does the EGR system operate properly?	Yes	Go to the next step.
		No	Inspect or replace the malfunctioning parts, according to the inspection results.
6	Perform the TP sweep inspection. (See 01–03B–85 Throttle position (TP) sweep inspection.) Does the electronic throttle control system work properly?	Yes	Visually inspect the throttle body (damaged/scratching.) If normal, go to the next step.
		No	Inspect or replace the malfunctioning parts, according to the inspection results.
7	Perform the Variable Swirl Control System Operation Inspection. (See 01–03B–86 Variable Swirl System Operation Inspection.) Does the variable swirl system work properly?	Yes	Go to the next step.
		No	Inspect or replace the malfunctioning parts, according to the inspection results.
8	Perform the Wastegate Control System Operation Inspection. (See 01–03B–93 Wastegate Control System Operation Inspection.) Does the variable swirl system work properly?	Yes	Go to the next step.
		No	Inspect or replace the malfunctioning parts, according to the inspection results.
9	Perform the spark test. (See 01–03B–90 Spark Test.) Is a strong blue spark visible at each cylinder?	Yes	Go to the next step.
		No	Inspect or replace the malfunctioning parts, according to the inspection results.
10	Inspect CMP and CKP sensor for the following; • Installation condition (See 01–40B–38 CAMSHAFT POSITION (CMP) SENSOR REMOVAL/INSTALLATION [L3 WITH TC].) (See 01–40B–41 CRANKSHAFT POSITION (CKP) SENSOR REMOVAL/INSTALLATION [L3 WITH TC].) • Damaged trigger wheel and camshaft • Open or short circuit in the wiring harnesses Is there any malfunction detected?	Yes	Repair or replace the malfunctioning part according to the inspection results.
		No	Go to the next step.
11	Connect the WDS or equivalent to the DLC-2. Access and monitor the following PIDs using the data monitor function. • ECT • MAF • IAT • IAT2 • APP • TP • MAP Do the PIDs indicate correct values under trouble condition? (See 01–40B–6 Using the WDS or Equivalent.)	Yes	Go to the next step.
		No	Inspect and repair or replace suspected parts and the related harnesses. If the malfunction remains, perform the intermittent concern troubleshooting procedure. (See 01–03B–6 INTERMITTENT CONCERN TROUBLESHOOTING [L3 WITH TC].)
12	Access and monitor FUEL_PRES PID. Is the FUEL_PRES PID value within the specification? (See 01–40B–6 Using the WDS or Equivalent.)	Yes	Go to Step 16.
		No	Go to the next step.
13	Is the vehicle accelerate performance normally?	Yes	Go to the next step.
		No	Go to the Step 15.
14	Inspect the fuel pressure sensor. (See 01–40B–34 FUEL PRESSURE SENSOR INSPECTION [L3 WITH TC].) Is the fuel pressure sensor normal?	Yes	Go to Step 16.
		No	Replace the delivery pipe.

STEP	INSPECTION	RESULTS	ACTION
15	Replace the high pressure fuel pump. Monitor FUEL_PRES PID. Is the FUEL_PRES PID value within the specified? (See 01–40B–34 FUEL PRESSURE SENSOR INSPECTION [L3 WITH TC].)	Yes	Troubleshooting is completed. Go to Step 17.
		No	Go to the next step.
16	Measure compression pressure for each cylinder. (See 01–10B–9 COMPRESSION INSPECTION [L3 WITH TC].) Are compression pressure within the specified?	Yes	Inspect fuel injector for each cylinder. (See 01–14B–29 FUEL INJECTOR INSPECTION [L3 WITH TC].)
		No	Inspect following: • Damaged valve seat • Worn valve stem and valve guide • Worn or stuck piston ring • Worn piston, piston ring or cylinder • Improper valve timing Service as necessary.
17	Verify test results. • If normal, return to the diagnostic index to service any additional symptoms. • If a malfunction remains, inspect the related Service Bulletins and/or On-line Repair Information and perform the repair or diagnosis. — If the vehicle is repaired, troubleshooting is completed. — If the vehicle is not repaired or additional diagnostic information is not available, reprogram the PCM if a later calibration is available. Retest.		

NO.14 POOR FUEL ECONOMY [L3 WITH TC]

E6U010318881W93

14	POOR FUEL ECONOMY
DESCRIPTION	Fuel economy is unsatisfactory.
POSSIBLE CAUSE	• Contaminated air cleaner element • Engine cooling system malfunction • Weak spark • Spark plug malfunction • Poor fuel quality • Erratic signal from CKP sensor • Erratic or no signal from CMP sensor • Fuel pressure sensor or related circuit malfunction • ECT sensor or related circuit malfunction • Manifold absolute pressure (MAP) sensor or related circuit malfunction • Accelerator position sensor or related circuit malfunction • MAF sensor or related circuit malfunction • Contaminated MAF sensor • IAT sensor No.1 or related circuit malfunction • IAT sensor No.2 or related circuit malfunction • VSS or related circuit malfunction • Variable swirl system malfunction • Improper coolant level • Inadequate fuel pressure (high-pressure side) • Injection timing is incorrect • Fuel injector or related circuit malfunction • High pressure fuel pump malfunction • Fuel leakage • Fuel line restriction • Fuel filter clogging • PCV valve malfunction • Brake dragging • Clutch slippage • A/C system improper operation • Improper valve timing due to jumping out of timing chain • Improper engine compression • Turbocharger malfunction • Charge air cooler malfunction • Exhaust system and/or three-way catalytic converter clogging • EGR system malfunction • Vacuum leakage • Injector driver module or related circuit malfunction **Warning** **The following troubleshooting flow chart contains the fuel system diagnosis and repair procedures. Read the following warnings before performing the fuel system services:** • **Fuel vapor is hazardous. It can easily ignite, causing serious injury and damage. Always keep sparks and flames away from fuel.** • **Fuel line spills and leakage are dangerous. Fuel can ignite and cause serious injury or death and damage. Fuel can also irritate skin and eyes. To prevent this, always complete "BEFORE REPAIR ROCEDURE" and "AFTER REPAIR PROCEDURE" described in this manual.** **(See 01–14B–4 BEFORE REPAIR PROCEDURE [L3 WITH TC].)** **(See 01–14B–5 AFTER REPAIR PROCEDURE [L3 WITH TC].)** **Caution** • **Disconnecting/connecting the quick release connector without cleaning it may possibly cause damage to the fuel pipe and quick release connector. Always clean the quick release connector joint area before disconnecting/connecting, and make sure that it is free of foreign material.**

Diagnostic procedure

STEP	INSPECTION	RESULTS	ACTION
1	Inspect for the following: • Air cleaner element for contamination • Intake-air system restriction • Fuel quality (proper octane, contamination, winter/summer blend) • Coolant level • Brake dragging • Clutch slippage • Charge air cooler condition (restriction or damaged) • Vacuum leakage • Fuel leakage • MAF sensor contaminated • Exhaust system and/or three-way catalytic converter restriction Are all items normal?	Yes	Go to the next step.
		No	Service if necessary. Repeat Step 1.
2	Perform the self-test function using the WDS or equivalent. Turn the ignition switch to the ON position. Retrieve any DTCs. Is a DTC displayed?	Yes	DTC is displayed: Go to the appropriate DTC test. (See 01–02B–14 DTC TABLE [L3 WITH TC].)
		No	No DTC is displayed: Go to the next step.
3	Perform the Cooling Fan Control System Operation Inspection. (See 01–03B–92 Cooling Fan Control System Inspection.) Does the EGR system operate properly?	Yes	Go to the next step.
		No	Inspect or replace the malfunctioning parts, according to the inspection results.
4	Perform the EGR system operation inspection. (See 01–03B–90 EGR Control System Inspection.) Does the EGR system operate properly?	Yes	Go to the next step.
		No	Inspect or replace the malfunctioning parts, according to the inspection results.
5	Perform the Variable Swirl Control System Operation Inspection. (See 01–03B–86 Variable Swirl System Operation Inspection.) Does the variable swirl system work properly?	Yes	Go to the next step.
		No	Inspect or replace the malfunctioning parts, according to the inspection results.
6	Perform the Wastegate Control System Operation Inspection. (See 01–03B–93 Wastegate Control System Operation Inspection.) Does the variable swirl system work properly?	Yes	Go to the next step.
		No	Inspect or replace the malfunctioning parts, according to the inspection results.
7	Perform the A/C Cut-off Operation Inspection. (See 01–03B–92 A/C Cut-off Control System Inspection.) Does the A/C Cut-off Operation work properly?	Yes	Go to the next step.
		No	Repair or replace malfunctioning parts, according to the inspection results.
8	Remove and shake the PCV valve. Does the PCV valve rattle?	Yes	Go to the next step.
		No	Replace the PCV valve.
9	Perform the spark test. (See 01–03B–90 Spark Test.) Is the strong blue spark visible at each cylinder?	Yes	Go to the next step.
		No	Inspect or replace the malfunctioning parts, according to the inspection results.
10	Inspect CMP and CKP sensor for the following; • Installation condition (See 01–40B–38 CAMSHAFT POSITION (CMP) SENSOR REMOVAL/INSTALLATION [L3 WITH TC].) (See 01–40B–41 CRANKSHAFT POSITION (CKP) SENSOR REMOVAL/INSTALLATION [L3 WITH TC].) • Damaged trigger wheel and camshaft • Open or short circuit in the wiring harnesses Is there any malfunction detected?	Yes	Repair or replace the malfunctioning part according to the inspection results.
		No	Go to the next step.

STEP	INSPECTION	RESULTS	ACTION
11	Connect the WDS or equivalent to the DLC-2. Access and monitor following PIDs using the data monitor function. • ECT • MAF • IAT • IAT2 • APP • TP • CPP (PCM terminal 1H) • PNP (PCM terminal 1W) • MAP • VSS Do the PIDs indicate the correct values according to the engine operating condition? (See 01–40B–6 Using the WDS or Equivalent.)	Yes	Go to the next step.
		No	Inspect and repair or replace suspected parts and the related harnesses. If the malfunction remains, perform the intermittent concern troubleshooting procedure. (See 01–03B–6 INTERMITTENT CONCERN TROUBLESHOOTING [L3 WITH TC].)
12	Access and monitor the FUEL_PRES PID. Is the FUEL_PRES PID value within the specification? (See 01–40B–6 Using the WDS or Equivalent.)	Yes	Go to Step 16.
		No	Go to the next step.
13	Is the vehicle accelerate performance normally?	Yes	Go to the next step.
		No	Go to Step 15.
14	Inspect the fuel pressure sensor. (See 01–40B–34 FUEL PRESSURE SENSOR INSPECTION [L3 WITH TC].) Is the fuel pressure sensor normal?	Yes	Go to Step 16.
		No	Replace the delivery pipe.
15	Replace the high pressure fuel pump. Monitor FUEL_PRES PID. Is the FUEL_PRES PID value within the specified? (See 01–40B–6 Using the WDS or Equivalent.)	Yes	Troubleshooting is completed. Go to Step 19.
		No	Go to the next step.
16	Inspect the turbocharger. (See 01–13B–16 TURBOCHARGER INSPECTION [L3 WITH TC].) Is there any problem in turbocharger?	Yes	Replace the turbocharger.
		No	Go to the next step.
17	Inspect the fuel injector for each cylinder. (See 01–14B–29 FUEL INJECTOR INSPECTION [L3 WITH TC].) Are fuel injectors normal?	Yes	Go to the next step.
		No	Replace the suspected fuel injector. (See 01–14B–25 FUEL INJECTOR REMOVAL/INSTALLATION [L3 WITH TC].)
18	Measure the compression pressure for each cylinder. (See 01–10B–9 COMPRESSION INSPECTION [L3 WITH TC].) Are compression pressures within the specification?	Yes	Replace the injector driver module. If the problem remains, overhaul the engine.
		No	Inspect for the following: • Damaged valve seat • Worn valve stem and valve guide • Worn or stuck piston ring • Worn piston, piston ring or cylinder • Improper valve timing Service if necessary.
19	Verify test results. • If normal, return to the diagnostic index to service any additional symptoms. • If a malfunction remains, inspect the related Service Bulletins and/or On-line Repair Information and perform the repair or diagnosis. — If the vehicle is repaired, troubleshooting is completed. — If the vehicle is not repaired or additional diagnostic information is not available, reprogram the PCM if a later calibration is available. Retest.		

NO.15 EMISSION COMPLIANCE [L3 WITH TC]

E6U010318881W94

15	EMISSION COMPLIANCE
DESCRIPTION	Fails emissions test.
POSSIBLE CAUSE	• Poor fuel quality • Vacuum lines leakage or blockage • Cooling system malfunction • Engine overheating • Spark plug malfunction • Air leakage from intake-air system • Variable swirl system malfunction • Wastegate control system improper operation • Turbocharger malfunction • Charge air cooler malfunction • Inadequate fuel pressure (high-pressure side) • PCV valve malfunction or incorrect valve installation • EGR system malfunction • Exhaust system and/or three-way catalytic converter restriction • Fuel tank ventilation system malfunction • Charcoal canister damage • Air cleaner element clogging or restriction • Throttle body malfunction • Improper operation of electronic throttle control system • Relief valve malfunction (built-in delivery pipe) • Suction control valve malfunction (built-in high pressure fuel pump) • Improper air/fuel mixture ratio control operation • Erratic or no signal from CMP sensor • Erratic signal from CKP sensor • Front or rear HO2S or related circuit malfunction • ECT or related circuit malfunction • MAF sensor or related circuit malfunction • IAT sensor No.1 or related circuit malfunction • IAT sensor No.2 or related circuit malfunction • Fuel pressure sensor or related circuit malfunction • Accelerator position sensor or related circuit malfunction • TP sensor or related circuit malfunction • Manifold absolute pressure (MAP) sensor or related circuit malfunction • Neutral or clutch switch malfunction • VSS or related circuit malfunction • Fuel line restriction • High pressure fuel pump malfunction • Fuel injector or related circuit malfunction • Incorrect fuel injection timing • Three-way catalytic converter (TWC) malfunction • Engine internal parts malfunction • Excessive carbon is built-up in combustion chamber • Improper engine compression • Improper valve timing • Injector driver module or related circuit malfunction **Warning** **The following troubleshooting flow chart contains the fuel system diagnosis and repair procedures. Read the following warnings before performing the fuel system services:** • **Fuel vapor is hazardous. It can easily ignite, causing serious injury and damage. Always keep sparks and flames away from fuel.** • **Fuel line spills and leakage are dangerous. Fuel can ignite and cause serious injury or death and damage. Fuel can also irritate skin and eyes. To prevent this, always complete "BEFORE REPAIR ROCEDURE" and "AFTER REPAIR PROCEDURE" described in this manual.** **(See 01–14B–4 BEFORE REPAIR PROCEDURE [L3 WITH TC].)** **(See 01–14B–5 AFTER REPAIR PROCEDURE [L3 WITH TC].)** **Caution** • **Disconnecting/connecting the quick release connector without cleaning it may possibly cause damage to the fuel pipe and quick release connector. Always clean the quick releas connector joint area before disconnecting/connecting, and make sure that it is free of foreign material.**

Diagnostic procedure

STEP	INSPECTION	RESULTS	ACTION
1	Is the engine overheating?	Yes	Go to symptom troubleshooting "NO.17 COOLING SYSTEM CONCERNS - OVERHEATING."
		No	Go to the next step.
2	Is the engine runs cold?	Yes	Go to symptom troubleshooting "NO.18 COOLING SYSTEM CONCERNS - RUNS COLD."
		No	Go to the next step.
3	Connect the WDS or equivalent to the DLC. Perform the self-test function using the WDS or equivalent. Turn the ignition switch to the ON position. Retrieve any DTCs. Is a DTC displayed?	Yes	DTC is displayed: Go to appropriate DTC test.
		No	No DTC is displayed: Go to the next step.
4	Inspect for the following. • Fuel quality (proper octane, contamination, winter/summer blend) • Charge air cooler condition (restriction or damaged) • Air cleaner element (clogging or restriction) • Intake-air system leakage • PCV valve installation • Vacuum line leakage or blockage • Fuel leakage at fuel system • Charcoal canister damaged • Exhaust system and/or three-way catalytic converter restriction Are all items normal?	Yes	Go to the next step.
		No	Service if necessary. Repeat Step 4.
5	Perform the EGR system operation inspection. (See 01–03B–90 EGR Control System Inspection.) Does the EGR system operate properly?	Yes	Go to the next step.
		No	Inspect or replace the malfunctioning parts, according to the inspection results.
6	Perform the TP sweep inspection. (See 01–03B–85 Throttle position (TP) sweep inspection.) Does the electronic throttle control system work properly?	Yes	Visually inspect the throttle body (damaged/ scratching.) If normal, go to the next step.
		No	Inspect or replace the malfunctioning parts, according to the inspection results.
7	Perform the Variable Swirl Control System Operation Inspection. (See 01–03B–86 Variable Swirl System Operation Inspection.) Does the variable swirl system work properly?	Yes	Go to the next step.
		No	Inspect or replace the malfunctioning parts, according to the inspection results.
8	Perform the Wastegate Control System Operation Inspection. (See 01–03B–93 Wastegate Control System Operation Inspection.) Does the variable swirl system work properly?	Yes	Go to the next step.
		No	Inspect or replace the malfunctioning parts, according to the inspection results.
9	Perform the Evaporative Emission (EVAP) System Leak Inspection. (See 01–03B–93 Wastegate Control System Operation Inspection.) Does the variable swirl system work properly?	Yes	Go to the next step.
		No	Inspect or replace the malfunctioning parts, according to the inspection results.
10	Remove and shake the PCV valve. Does the PCV valve rattle?	Yes	Go to the next step.
		No	Replace the PCV valve.
11	Perform the spark test. (See 01–03B–90 Spark Test.) Is a strong blue spark visible at each cylinder?	Yes	Go to the next step.
		No	Inspect or replace the malfunctioning parts, according to the inspection results.
12	Inspect CMP and CKP sensor for the following; • Installation condition (See 01–40B–38 CAMSHAFT POSITION (CMP) SENSOR REMOVAL/INSTALLATION [L3 WITH TC].) (See 01–40B–41 CRANKSHAFT POSITION (CKP) SENSOR REMOVAL/INSTALLATION [L3 WITH TC].) • Damaged trigger wheel and camshaft • Open or short circuit in the wiring harnesses Is there any malfunction detected?	Yes	Repair or replace the malfunctioning part according to the inspection results.
		No	Go to the next step.

STEP	INSPECTION	RESULTS	ACTION
13	Connect the WDS or equivalent to the DLC-2. Access and monitor the following PIDs using the data monitor function. • ECT • MAF • IAT • IAT2 • APP • TP • MAP • VSS • O2S11 • O2S12 • LONGFT1 • SHTFT1 • CPP (PCM terminal 1H) • PNP (PCM terminal 1W) Do the PIDs indicate the correct values according to the engine operating condition? (See 01–40B–6 Using the WDS or Equivalent.)	Yes	Go to the next step.
		No	Inspect and repair or replace suspected parts and the related harnesses. If the malfunction remains, perform the intermittent concern troubleshooting procedure. (See 01–03B–6 INTERMITTENT CONCERN TROUBLESHOOTING [L3 WITH TC].)
14	Access and monitor the FUEL_PRES PID. Is the FUEL_PRES PID value within the specification? (See 01–40B–6 Using the WDS or Equivalent.)	Yes	Go to Step 18.
		No	Go to the next step.
15	Is the vehicle accelerate performance normally?	Yes	Go to the next step.
		No	Go to Step 17.
16	Inspect the fuel pressure sensor. (See 01–40B–34 FUEL PRESSURE SENSOR INSPECTION [L3 WITH TC].) Is the fuel pressure sensor normal?	Yes	Go to Step 18.
		No	Replace the delivery pipe.
17	Replace the high pressure fuel pump. Monitor FUEL_PRES PID. Is the FUEL_PRES PID value within the specified? (See 01–40B–6 Using the WDS or Equivalent.)	Yes	Troubleshooting is completed. Go to Step 22.
		No	Go to the next step.
18	Inspect the turbocharger. (See 01–13B–16 TURBOCHARGER INSPECTION [L3 WITH TC].) Is there any problem in turbocharger?	Yes	Replace the turbocharger.
		No	Go to the next step.
19	Inspect the three-way catalytic converter (TWC). Is the TWC normal?	Yes	Go to the next step.
		No	Replace the TWC.
20	Inspect the fuel injector for each cylinder. (See 01–14B–29 FUEL INJECTOR INSPECTION [L3 WITH TC].) Are fuel injectors normal?	Yes	Go to the next step.
		No	Replace the suspected fuel injector. (See 01–14B–25 FUEL INJECTOR REMOVAL/ INSTALLATION [L3 WITH TC].)
21	Measure the compression pressure for each cylinder. (See 01–10B–9 COMPRESSION INSPECTION [L3 WITH TC].) Are compression pressures within the specification?	Yes	Replace the injector driver module. If the problem remains, overhaul the engine.
		No	Inspect for the following: • Damaged valve seat • Worn valve stem and valve guide • Worn or stuck piston ring • Worn piston, piston ring or cylinder • Improper valve timing Service if necessary.
22	Verify test results. • If normal, return to the diagnostic index to service any additional symptoms. • If a malfunction remains, inspect the related Service Bulletins and/or On-line Repair Information and perform the repair or diagnosis. — If the vehicle is repaired, troubleshooting is completed. — If the vehicle is not repaired or additional diagnostic information is not available, reprogram the PCM if a later calibration is available. Retest.		

NO.16 HIGH OIL CONSUMPTION/LEAKAGE [L3 WITH TC]

E6U010318881W95

16	HIGH OIL CONSUMPTION/LEAKAGE
DESCRIPTION	Oil consumption is excessive.
POSSIBLE CAUSE	• PCV valve malfunction • Improper dipstick • Improper engine oil viscosity • Engine internal parts malfunction • Seal leakage at the compressor or turbine end of turbocharger (indicated by oil in housing on wheel) • Oil leakage

Diagnostic procedure

STEP	INSPECTION	RESULTS	ACTION
1	Remove and shake the PCV valve. Does the PCV valve rattle?	Yes	Go to the next step.
		No	Replace the PCV valve.
2	Verify the following: • Proper dipstick • Proper engine viscosity • Engine oil level Are all items normal?	Yes	Go to the next step.
		No	Service if necessary. Repeat Step 2.
3	Inspect the oil leakage from outside of the engine. Is there any oil leakage found?	Yes	Repair or replace oil leakage part.
		No	Go to the next step.
4	Remove the parts to necessary to inspect turbocharger without remove the turbocharger. Visually inspect for the oil leakage inside turbocharger compressor and turbine housing. Is any engine oil found inside turbocharger compressor or turbine housing?	Yes	Excessive amount of oil is found: Replace the turbocharger. Small amount of oil is found: Wipe oil out of vehicle, then go to the next step.
		No	Go to the next step.
5	Is any engine oil found around oil pipes attached on turbocharger center housing?	Yes	If oil leaks from damaged pipe, replace oil pipe. Install the removed parts at Step 4.
		No	Inspect internal engine parts such as valves, valve guides, valve stem seals, cylinder head drain passage, and piston rings. Then install the removed parts at Step 4.
6	Verify test results. • If normal, return to the diagnostic index to service any additional symptoms. • If a malfunction remains, inspect the related Service Bulletins and/or On-line Repair Information and perform the repair or diagnosis. — If the vehicle is repaired, troubleshooting is completed. — If the vehicle is not repaired or additional diagnostic information is not available, reprogram the PCM if a later calibration is available. Retest.		

NO.17 COOLING SYSTEM CONCERNS-OVERHEATING [L3 WITH TC]

E6U010318881W96

17	COOLING SYSTEM CONCERNS -OVERHEATING
DESCRIPTION	Engine runs at higher than normal temperature/overheats.
POSSIBLE CAUSE	• Improper coolant level • Blown fuse • Coolant leakage (engine internal, turbocharger, external) • Excessive A/C system pressure • A/C system operation is improper • Improper water/anti-freeze mixture • Fans reverse rotation • Poor radiator condition • Thermostat malfunction • Radiator hose damage • Cooling fan inoperative • Condenser fan inoperative • Improper or damaged radiator cap • Coolant overflow system malfunction • Improper drive belt tension • Drive belt damage

Diagnostic procedure

STEP	INSPECTION	RESULTS	ACTION
1	Inspect for the following: • Engine coolant level • Coolant leakage (around heater unit in passenger compartment, coolant hoses and/or radiator.) • Water and anti-freeze mixture • Radiator condition • Collapsed or restricted radiator hoses • Radiator pressure cap • Coolant overflow system • Fan rotational direction • Fan rotation direction • Fuses Are all items normal?	Yes	Go to the next step.
		No	Service if necessary. Repeat Step 1.Service if necessary.
2	Connect the WDS or equivalent to the DLC-2. Turn the ignition switch to the ON position (Engine off). Retrieve any DTCs. Is there any DTCs displayed?	Yes	DTC is displayed: Go to appropriate DTC test.
		No	No DTC is displayed: Go to the next step.
3	Perform the KOEO and KOER self-test function using the WDS or equivalent. (See 01–02B–9 KOEO/KOER SELF TEST [L3 WITH TC].) Is there any DTCs displayed?	Yes	DTC is displayed: Go to appropriate DTC test.
		No	No DTC is displayed: Go to the next step.
4	Start the engine and run it at idle speed. Turn the A/C switch off. Does the A/C compressor disengaged?	Yes	Go to the next step.
		No	Go to symptom troubleshooting "NO.24 A/C ALWAYS ON OR A/C COMPRESSOR RUNS CONTINUOUSLY." (See 01–03B–71 NO.24 A/C IS ALWAYS ON OR A/C COMPRESSOR RUNS CONTINUOUSLY [L3 WITH TC].)
5	Perform the Cooling Fan Control System Operation Inspection. (See 01–03B–92 Cooling Fan Control System Inspection.) Does the cooling fan system operate properly?	Yes	Go to the next step.
		No	Repair or replace malfunctioning part, according to inspection results.
6	Is the drive belt normal?	Yes	Go to the next step.
		No	Replace the drive belt.
7	Is there any leakage around heater unit in passenger compartment?	Yes	Inspect and service heater unit for leakage.
		No	Go to the next step.
8	Is there any leakage at coolant hoses and/or radiator?	Yes	Replace the malfunctioning part.
		No	Go to the next step.
9	Cool down the engine. Remove the thermostat and inspect operation. (See 01–12B–7 THERMOSTAT REMOVAL/INSTALLATION [L3 WITH TC].) (See 01–12B–7 THERMOSTAT INSPECTION [L3 WITH TC].) Is thermostat normal?	Yes	Thermostat is normal. Inspect the cylinder block for leakage or blockage.
		No	Access the ECT PID using the WDS or equivalent. Inspect for both ECT PID and temperature gauge readings. If the temperature gauge on instrument cluster indicates normal but ECT PID is not same as temperature gauge reading, inspect the ECT sensor. (See 01–40B–30 ENGINE COOLANT TEMPERATURE (ECT) SENSOR INSPECTION [L3 WITH TC].) If the temperature gauge on instrument cluster indicates overheating but ECT PID is normal, inspect the instrument cluster. (See 09–22–6 Water Temperature Gauge.)
10	Verify test results. • If normal, return to the diagnostic index to service any additional symptoms. • If a malfunction remains, inspect the related Service Bulletins and/or On-line Repair Information and perform the repair or diagnosis. — If the vehicle is repaired, troubleshooting is completed. — If the vehicle is not repaired or additional diagnostic information is not available, reprogram the PCM if a later calibration is available. Retest.		

NO.18 COOLING SYSTEM CONCERNS-RUNS COLD [L3 WITH TC]

E6U010318881W97

18	COOLING SYSTEM CONCERNS - RUNS COLD
DESCRIPTION	Engine takes excessive time to reach normal operating temperature.
POSSIBLE CAUSE	• Thermostat malfunction • Condenser fan system malfunction • Cooling fan system malfunction

Diagnostic procedure

STEP	INSPECTION	RESULTS	ACTION
1	Is customer complaint "Lack of passenger compartment heat" only?	Yes	Inspect the A/C heater system.
		No	Go to the next step.
2	Does the engine speed continue at fast idle?	Yes	Go to symptom troubleshooting "NO.9 FAST IDLE/ RUNS ON." (See 01–03B–39 NO.9 FAST IDLE/RUNS ON [L3 WITH TC].)
		No	Go to the next step.
3	Cool down the engine. Remove the thermostat and inspect operation. (See 01–12B–7 THERMOSTAT REMOVAL/ INSTALLATION [L3 WITH TC].) (See 01–12B–7 THERMOSTAT INSPECTION [L3 WITH TC].) Is thermostat normal?	Yes	Go to the next step.
		No	Replace the thermostat.
4	Perform the Cooling Fan Control System Operation Inspection. (See 01–03B–92 Cooling Fan Control System Inspection.) Does the cooling fan system operate properly?	Yes	Access the ECT PID using the WDS or equivalent. Inspect for both ECT PID and temperature gauge readings. If the temperature gauge on instrument cluster indicates normal but ECT PID is not same as temperature gauge reading, inspect the ECT sensor. (See 01–40B–30 ENGINE COOLANT TEMPERATURE (ECT) SENSOR INSPECTION [L3 WITH TC].) If the temperature gauge on instrument cluster indicates overheating but ECT PID is normal, inspect the instrument cluster. (See 09–22–6 Water Temperature Gauge.)
		No	Repair or replace malfunctioning part, according to inspection results.
5	Verify test results. • If normal, return to the diagnostic index to service any additional symptoms. • If a malfunction remains, inspect the related Service Bulletins and/or On-line Repair Information and perform the repair or diagnosis. — If the vehicle is repaired, troubleshooting is completed. — If the vehicle is not repaired or additional diagnostic information is not available, reprogram the PCM if a later calibration is available. Retest.		

NO.19 EXCESSIVE BLACK SMOKE [L3 WITH TC]

E6U010318881W98

19	EXHAUST SMOKE
DESCRIPTION	Blue, black, or smoke from the exhaust system
POSSIBLE CAUSE	**Blue smoke (Burning oil):** • PCV valve malfunction • Engine internal oil leakage • Oil leakage at the compressor or turbine end of the turbocharger **White smoke (Water in combustion):** • Cooling system malfunction (coolant loss) • Engine internal coolant leakage • Coolant leakage at the compressor or the turbine end of the turbocharger **Black smoke (Rich fuel mixture):** • Air cleaner restriction • Intake-air system is collapsed or restricted • Leakage at engine intake or exhaust manifold • Wastegate valve malfunction (stuck open) • Excessive fuel pressure • Improper engine compression • Ignition system malfunction • Improper fuel injection timing and amount **Warning** **The following troubleshooting flow chart contains the fuel system diagnosis and repair procedures. Read the following warnings before performing the fuel system services:** • **Fuel vapor is hazardous. It can easily ignite, causing serious injury and damage. Always keep sparks and flames away from fuel.** • **Fuel line spills and leakage are dangerous. Fuel can ignite and cause serious injury or death and damage. Fuel can also irritate skin and eyes. To prevent this, always complete "BEFORE REPAIR ROCEDURE" and "AFTER REPAIR PROCEDURE" described in this manual.** **(See 01–14B–4 BEFORE REPAIR PROCEDURE [L3 WITH TC].)** **(See 01–14B–5 AFTER REPAIR PROCEDURE [L3 WITH TC].)** **Caution** • **Disconnecting/connecting the quick release connector without cleaning it may possibly cause damage to the fuel pipe and quick release connector. Always clean the quick release connector joint area before disconnecting/connecting, and make sure that it is free of foreign material.**

Diagnostic procedure

STEP	INSPECTION	RESULTS	ACTION
1	What color is smoke coming from the exhaust system?	Blue	Burning oil is indicated. Go to the next step.
		White	Water in combustion is indicated. Go to the Step 5.
		Black	Rich fuel mixture is indicating. Go to the Step 6.
2	Remove and shake the PCV valve. Does the PCV valve rattle?	Yes	Go to the next step.
		No	Replace the PCV valve.
3	Remove the parts necessary to inspect turbocharger without remove the turbocharger. Visually inspect for the turbocharger compressor housing. Is any engine oil found inside turbocharger compressor housing?	Yes	Install all parts removed in this step. **Perform the following, according to inspection results. Excessive amount of oil is found:** Replace the turbocharger. **Small amount of oil is found:** Wipe oil out of vehicle, then Go to the next step.
		No	Turbocharger is normal. Install all parts removed in this step. Then, Go to the next step.
4	Inspect for the following engine internal parts. • Damaged valve guide, stems or valve seals • Blocked oil drain passage in cylinder head • Piston ring is not seated, seized or worn • Damage cylinder bore Are there ant problem found?	Yes	Repair or replace suspected parts, according to the inspection results.
		No	Engine internal parts are normal. If other driveability symptoms are present, return to diagnostic index to service additional symptoms.
5	Does cooling system hold the coolant pressure? (See 01–12B–5 ENGINE COOLANT LEAKAGE INSPECTION [L3 WITH TC].)	Yes	Inspect for the following: • Cylinder head gasket leakage • Intake manifold gasket leakage • Cracked or porous engine block If other driveability symptoms are present, return to diagnostic index to service additional symptoms.
		No	Inspect for the cause.
6	Inspect for the following for intake-air system. • Air cleaner restriction • Collapsed or restricted • Leakage Are all items normal?	Yes	Go to the next step.
		No	Repair or replace the suspected part.
7	Connect the WDS or equivalent to the DLC-2. Access following PIDs. • ECT • MAF • IAT • IAT2 • APP • TP • MAP • VSS • O2S11 • O2S12 • LONGFT1 • SHTFT1 • PNP (PCM terminal 1W) • CPP (PCM terminal 1H) Monitor the PIDs under the black smoke appeared engine condition. Do all PID indicate normal according to engine conditions?	Yes	Go to the next step.
		No	Inspect and repair or replace suspected parts and the the related harnesses. If the malfunction remains, perform the intermittent concern troubleshooting procedure. (See 01–03B–6 INTERMITTENT CONCERN TROUBLESHOOTING [L3 WITH TC].)
8	Inspect the wastegate. (See 01–13B–14 WASTEGATE CONTROL SOLENOID VALVE INSPECTION [L3 WITH TC].) Does the wastegate stuck open?	Yes	Perform the wastegate control system operation inspection. (See 01–03B–93 Wastegate Control System Operation Inspection.) Repair or replace malfunctioning part according to the inspection results.
		No	Go to the next step.

STEP	INSPECTION	RESULTS	ACTION
9	Connect the WDS or equivalent to DLC-2. Access and monitor following PIDs using the data monitor function. • ECT • MAF • IAT • IAT2 • APP • TP • MAP • VSS • CPP (PCM terminal 1H) • PNP (PCM terminal 1W) • O2S11 • O2S12 • LONGFT1 • SHTFT1 Do the PIDs indicate correct values under trouble condition? (See 01–40B–6 Using the WDS or Equivalent.)	Yes	Go to the next step.
		No	Inspect and repair or replace suspected parts and related harnesses. If the malfunction remains, perform the intermittent concern troubleshooting procedure. (See 01–03B–6 INTERMITTENT CONCERN TROUBLESHOOTING [L3 WITH TC].)
10	Access and monitor the FUEL_PRES PID. Is the FUEL_PRES PID value within the specification? (See 01–40B–6 Using the WDS or Equivalent.)	Yes	Go to Step 14.
		No	Go to the next step.
11	Is vehicle accelerate performance normally?	Yes	Go to the next step.
		No	Go to Step 13.
12	Inspect the fuel pressure sensor. (See 01–40B–34 FUEL PRESSURE SENSOR INSPECTION [L3 WITH TC].) Is the fuel pressure sensor normal?	Yes	Go to Step 14.
		No	Replace the delivery pipe.
13	Replace the high pressure fuel pump. Monitor FUEL_PRES PID. Is the FUEL_PRES PID value within the specified? (See 01–40B–6 Using the WDS or Equivalent.)	Yes	Troubleshooting is completed. Retest Step 16.
		No	Go to the next step.
14	Perform the spark test. (See 01–03B–90 Spark Test.) Is a strong blue spark visible at each cylinder?	Yes	Go to the next step.
		No	Inspect or replace the malfunctioning parts, according to the inspection results.
15	Measure the compression pressure for each cylinder. (See 01–10B–9 COMPRESSION INSPECTION [L3 WITH TC].) Are compression pressures within the specification?	Yes	Inspect the fuel injector for each cylinder. (See 01–14B–29 FUEL INJECTOR INSPECTION [L3 WITH TC])
		No	Inspect for the following: • Damaged valve seat • Worn valve stem and valve guide • Worn or stuck piston ring • Worn piston, piston ring or cylinder • Improper valve timing Service if necessary.
16	Verify test results. • If normal, return to the diagnostic index to service any additional symptoms. • If a malfunction remains, inspect the related Service Bulletins and/or On-line Repair Information and perform the repair or diagnosis. — If the vehicle is repaired, troubleshooting is completed. — If the vehicle is not repaired or additional diagnostic information is not available, reprogram the PCM if a later calibration is available. Retest.		

NO.20 FUEL ODOR (IN ENGINE COMPARTMENT) [L3 WITH TC]

E6U010318881W99

20	FUEL ODOR (IN ENGINE COMPARTMENT)
DESCRIPTION	Gasoline fuel smell or visible leakage
POSSIBLE CAUSE	• Excessive fuel pressure • Purge solenoid valve malfunction • Fuel system vent system blockage • Evaporative gas leakage • Improper connection of evaporative related vacuum hoses • Charcoal canister malfunction • Fuel leakage from fuel system **Warning** **The following troubleshooting flow chart contains the fuel system diagnosis and repair procedures. Read the following warnings before performing the fuel system services:** **• Fuel vapor is hazardous. It can easily ignite, causing serious injury and damage. Always keep sparks and flames away from fuel.** **• Fuel line spills and leakage are dangerous. Fuel can ignite and cause serious injury or death and damage. Fuel can also irritate skin and eyes. To prevent this, always complete "BEFORE REPAIR ROCEDURE" and "AFTER REPAIR PROCEDURE" described in this manual.** **(See 01–14B–4 BEFORE REPAIR PROCEDURE [L3 WITH TC].)** **(See 01–14B–5 AFTER REPAIR PROCEDURE [L3 WITH TC].)** **Caution** **• Disconnecting/connecting the quick release connector without cleaning it may possibly cause damage to the fuel pipe and quick release connector. Always clean the quick release connector joint area before disconnecting/connecting, and make sure that it is free of foreign material.**

Diagnostic procedure

STEP	INSPECTION	RESULTS	ACTION
1	Visually inspect fuel leakage at fuel line. Is there any fuel leakage?	Yes	Service if necessary.
		No	Go to the next step.
2	Inspect the vacuum hose routine. (See 01–13B–4 VACUUM HOSE ROUTING DIAGRAM [L3 WITH TC].) Are vacuum hoses routines properly?	Yes	Go to the next step.
		No	Reconnect the vacuum hose.
3	Perform the Evaporative Emission (EVAP) System Leak Inspection. (See 01–03B–94 Evaporative Emission (EVAP) System Leak Inspection.) Is there any problem found?	Yes	Repair or replace suspected part according to the inspection results.
		No	Go to the next step.
4	Inspect the airflow of purge solenoid valve. (See 01–16B–10 Airflow Inspection.) Is the purge solenoid airflow properly?	Yes	Go to the next step.
		No	Replace the purge solenoid valve.
5	Connect the WDS or equivalent to the DLC-2. Access the FUEL_PRESPID. Monitor the FUEL_PRES PID while idle and race the engine. Is the FUEL_PRES PID indicate **15 MPa {153 kgf/cm^2, 2175 psi} or less**?	Yes	Inspect the charcoal canister for fuel saturation. If excess amount of liquid fuel is present, replace the charcoal canister.
		No	Inspect the fuel pressure sensor and the high pressure fuel pump. (See 01–40B–34 FUEL PRESSURE SENSOR INSPECTION [L3 WITH TC].) (See 01–14B–20 HIGH PRESSURE FUEL PUMP INSPECTION [L3 WITH TC].)
5	Verify test results. • If normal, return to the diagnostic index to service any additional symptoms. • If a malfunction remains, inspect the related Service Bulletins and/or On-line Repair Information and perform the repair or diagnosis. — If the vehicle is repaired, troubleshooting is completed. — If the vehicle is not repaired or additional diagnostic information is not available, reprogram the PCM if a later calibration is available. Retest.		

NO.21 ENGINE NOISE [L3 WITH TC]

E6U010318881WA0

21	ENGINE NOISE
DESCRIPTION	Engine noise under hood
POSSIBLE CAUSE	**Squeal, click or chirp noise:** • Improper engine oil level • Loose installation of solenoid valves • Improper drive belt tension **Rumble or grinding sound noise:** • Loose parts • Fluid revel low or air in power the steering fluid • Improper drive belt tension **Hiss sound noise:** • Vacuum leakage • Loose spark plug • Air leakage from the intake-air system **Rattle noise:** • Loose parts **Rap or roar noise:** • Exhaust system looseness **Excessive noise from turbocharger** • Foreign objects or material in the compressor inlet to the intake manifold ducting or the compressor housing • Carbon built-up in the turbine housing • Turbocharger routing assembly banding or dragging • Loose intake or exhaust ducting systems **Other noise:** • Camshaft friction gear noise or MLA noise • Timing chain noise **Warning** **The following troubleshooting flow chart contains the fuel system diagnosis and repair procedures. Read the following warnings before performing the fuel system services:** • **Fuel vapor is hazardous. It can easily ignite, causing serious injury and damage. Always keep sparks and flames away from fuel.** • **Fuel line spills and leakage are dangerous. Fuel can ignite and cause serious injury or death and damage. Fuel can also irritate skin and eyes. To prevent this, always complete "BEFORE REPAIR ROCEDURE" and "AFTER REPAIR PROCEDURE" described in this manual.** **(See 01–14B–4 BEFORE REPAIR PROCEDURE [L3 WITH TC].)** **(See 01–14B–5 AFTER REPAIR PROCEDURE [L3 WITH TC].)** **Caution** • **Disconnecting/connecting the quick release connector without cleaning it may possibly cause damage to the fuel pipe and quick release connector. Always clean the quick release connector joint area before disconnecting/connecting, and make sure that it is free of foreign material.**

Diagnostic procedure

STEP	INSPECTION	RESULTS	ACTION
1	Is the noise from the turbocharger?	Yes	Go to Step 8.
		No	Go to the next step
2	Is squeal, click or chirp sound present?	Yes	Inspect the engine oil level, solenoid valves installation or drive belt tension.
		No	Go to the next step.
3	Is rumble or grinding sound present?	Yes	Inspect and repair the following; • Drive belt tension • Loose parts in engine compartment • Power steering system fluid level If normal, perform the power steering fluid line air bleed. (See 06–12–3 AIR BLEEDING.)
		No	Go to the next step.
4	Is rattle sound present?	Yes	Inspect the location of rattle for loose parts.
		No	Go to the next step.
5	Is hiss sound present?	Yes	Inspect and repair the following; • Vacuum leakage • Spark plug looseness • Intake-air system leakage
		No	Go to the next step.
6	Is rap or roar sound present?	Yes	Inspect the exhaust system or loose parts.
		No	Go to the next step.
7	Is knocking noise present?	Yes	Go to symptom troubleshooting "NO.13 KNOCKING/PINGING". (See 01–03B–52 NO.13 KNOCKING/PINGING [L3 WITH TC].)
		No	If noise comes from engine internal, inspect for the friction gear, timing chain or MLA noise.
8	Inspect the intake and exhaust housing system for loose installation. Is there any problem found?	Yes	Repair installation or replace suspected part.
		No	Go to the next step.
9	Remove the parts to necessary to inspect turbocharger without remove the turbocharger. Inspect if turbocharger compressor wheel is bent, damaged, or interfering with housing on vehicle. Is there any problem?	Yes	Replace the turbocharger.
		No	Go to the next step.
10	Inspect the turbocharger compressor wheel locknut is loose or has fallen down inside turbocharger. Is there any problem?	Yes	Replace the turbocharger.
		No	Go to the next step.
11	Turn the turbocharger compressor wheel by hand. Does the wheel turn easily and smoothly?	Yes	Go to the next step.
		No	Replace the turbocharger.
12	Visually inspect the turbine housing. Is there any carbon built-up or foreign material on turbine housing?	Yes	Clean built-up carbon or remove foreign materials. If turbine housing damaged, replace the turbocharger.
		No	Install the removal parts at Step 9, and inspect all turbocharger related parts installed correctly.
13	Verify test results. • If normal, return to the diagnostic index to service any additional symptoms. • If a malfunction remains, inspect the related Service Bulletins and/or On-line Repair Information and perform the repair or diagnosis. — If the vehicle is repaired, troubleshooting is completed. — If the vehicle is not repaired or additional diagnostic information is not available, reprogram the PCM if a later calibration is available. Retest.		

NO.22 VIBRATION CONCERNS (ENGINE) [L3 WITH TC]

E6U010318881WA1

22	VIBRATION CONCERNS (ENGINE)
DESCRIPTION	• Vibration from under the hood or driveline
POSSIBLE CAUSE	• Loose attaching bolts or worn parts • Components malfunction such as worn parts

Diagnostic procedure

STEP	INSPECTION	RESULTS	ACTION
1	Inspect the following components for loose attaching bolts or worn parts: • Cooling fan • Condenser fan • Drive belt and pulley • Engine mounts • Exhaust system Are all items normal?	Yes	Inspect the following systems: • Wheels • Transmission and mounts • Driveline • Suspension Service if necessary.
		No	Readjust or retighten suspect parts installation position. Service if necessary for other parts.
2	Verify test results. • If normal, return to the diagnostic index to service any additional symptoms. • If a malfunction remains, inspect the related Service Bulletins and/or On-line Repair Information and perform the repair or diagnosis. — If the vehicle is repaired, troubleshooting is completed. — If the vehicle is not repaired or additional diagnostic information is not available, reprogram the PCM if a later calibration is available. Retest.		

NO.23 A/C DOES NOT WORK SUFFICIENTLY [L3 WITH TC]

E6U010318881WA2

23	A/C DOES NOT WORK SUFFICIENTLY.
DESCRIPTION	A/C compressor magnetic clutch does not engage when A/C switch is turned on.
POSSIBLE CAUSE	• Improper refrigerant charging amount • Open A/C magnetic clutch • Open circuit between the A/C relay and the A/C magnetic clutch • Poor ground of A/C magnetic clutch • Refrigerant pressure switch is stuck open. • A/C relay is stuck open. • Seized A/C compressor • Open circuit between the A/C switch and the PCM through both the refrigerant pressure switch and the A/C amplifier

Diagnostic procedure

STEP	INSPECTION	RESULTS	ACTION
1	Connect the WDS or equivalent to the DLC-2. Turn the ignition switch to the ON position (Engine off). Retrieve any DTCs. Are there any DTCs displayed?	Yes	**DTC is displayed:** Go to the appropriate DTC test.
		No	**No DTC is displayed:** Go to the next step.
2	Disconnect the A/C compressor connector. Start the engine and turn the A/C switch on. Is there correct voltage at terminal of A/C compressor magnetic clutch connector? **Specification** **10.5 V or more**	Yes	Inspect for the ground condition of magnetic clutch on A/C compressor. If ground condition is normal, inspect for an open circuit magnetic clutch coil.
		No	Go to the next step.
3	Disconnect the refrigerant pressure switch connector. Connect jumper wire between terminals of A/C high-pressure switch connector. Connect jumper wires between terminals of refrigerant pressure switch connector. Turn the ignition switch to the ON position. Turn A/C switch on and set blower fan to any speed. Does A/C work?	Yes	Inspect the refrigerant pressure switch operation. If switch is normal, go to the next step.
		No	Inspect for the following: • A/C switch is stuck open. • Open circuit between refrigerant pressure switch and PCM terminal 1AC • Open circuit between blower motor fan switch and resistor (if blower motor does not operate) • Evaporator temperature sensor and A/C amplifier

STEP	INSPECTION	RESULTS	ACTION
4	Remove jumper wire from switch connector. Reconnect connector to refrigerant pressure switch. Start engine and turn A/C switch on. Does fan operate?	Yes	Inspect the whether A/C relay is stuck open. Replace if necessary.
		No	Inspect the following and repair or replace if necessary: • Refrigerant charging amount • A/C compressor for seizure
5	Verify test results. • If normal, return to the diagnostic index to service any additional symptoms. • If a malfunction remains, inspect the related Service Bulletins and/or On-line Repair Information and perform the repair or diagnosis. — If the vehicle is repaired, troubleshooting is completed. — If the vehicle is not repaired or additional diagnostic information is not available, reprogram the PCM if a later calibration is available. Retest.le. Retest.		

NO.24 A/C IS ALWAYS ON OR A/C COMPRESSOR RUNS CONTINUOUSLY [L3 WITH TC]

E6U010318881WA3

24	A/C IS ALWAYS ON OR A/C COMPRESSOR RUNS CONTINUOUSLY.
DESCRIPTION	A/C compressor magnetic clutch does not disengage.
POSSIBLE CAUSE	• A/C compressor magnetic clutch engagement is stuck. • A/C relay is stuck closed. • Short to ground between A/C switch and PCM • Short to ground circuit between A/C relay and PCM • A/C relay to magnetic clutch circuit shorted to battery power

Diagnostic procedure

STEP	INSPECTION	RESULTS	ACTION
1	Connect the WDS or equivalent to the DLC-2. Turn the ignition switch to the ON position (Engine off). Retrieve any DTCs. Are there any DTCs displayed?	Yes	**DTC is displayed:** Go to the appropriate DTC test.
		No	**No DTC is displayed:** Go to the next step.
2	Start the engine and idle it. Turn the A/C switch on. Remove the A/C relay. Does the A/C magnetic clutch disengage?	Yes	Inspect for the following: • A/C relay is stuck closed. • Short to ground circuit between A/C relay and PCM terminal 4N. If both items normal, go to the next step.
		No	Inspect if circuit between A/C relay and magnetic clutch shorts to battery power circuit. If circuit is normal, inspect magnetic clutch for stuck engagement or clearance.
3	Disconnect the refrigerant pressure switch connector. Start the engine and turn the A/C switch on. **Note** • A/C should not work when disconnecting connector. If A/C remains working, short to ground circuit may be present. Does A/C remain working?	Yes	Inspect for a short to ground circuit between refrigerant pressure switch and PCM terminal 1AC.
		No	Go to the next step.
4	Reconnect refrigerant pressure switch connector. Turn off A/C switch. **Note** • A/C should not work when turning A/C switch off. If A/C remains working, short to ground circuit may be present. Does A/C remain working?	Yes	Inspect for the following: • Short to ground circuit between A/C switch and A/C amplifier • Short to ground circuit between A/C amplifier and refrigerant pressure switch
		No	Inspect the whether A/C switch is stuck closed.
5	Verify test results. • If normal, return to the diagnostic index to service any additional symptoms. • If a malfunction remains, inspect the related Service Bulletins and/or On-line Repair Information and perform the repair or diagnosis. — If the vehicle is repaired, troubleshooting is completed. — If the vehicle is not repaired or additional diagnostic information is not available, reprogram the PCM if a later calibration is available. Retest.le. Retest.		

NO.25 A/C IS NOT CUT OFF UNDER WIDE OPEN THROTTLE CONDITIONS [L3 WITH TC]

E6U010318881WA4

25	A/C IS NOT CUT OFF UNDER WOT CONDITIONS.
DESCRIPTION	A/C compressor magnetic clutch does not disengage under WOT.
POSSIBLE CAUSE	• Accelerator position sensor malfunction • Loosely installed accelerator position sensor.

Diagnostic procedure

STEP	INSPECTION	RESULTS	ACTION
1	Does the A/C compressor disengage when A/C switch is turned off?	Yes	Go to the next step.
		No	Go to symptom troubleshooting "No.24 A/C is always on or A/C compressor runs continuously".
2	Connect the WDS or equivalent to the DLC-2. Turn the ignition switch to the ON position (Engine off). Retrieve any DTCs. Are there any DTCs displayed?	Yes	**DTC is displayed:** Go to appropriate DTC test.
		No	**No DTC is displayed:** Inspect the accelerator position sensor.
3	Verify test results. • If normal, return to the diagnostic index to service any additional symptoms. • If a malfunction remains, inspect the related Service Bulletins and/or On-line Repair Information and perform the repair or diagnosis. — If the vehicle is repaired, troubleshooting is completed. — If the vehicle is not repaired or additional diagnostic information is not available, reprogram the PCM if a later calibration is available. Retest.Ie. Retest.		

NO.26 EXHAUST SULPHUR SMELL [L3 WITH TC]

E6U010318881WA5

26	EXHAUST SULPHUR SMELL
DESCRIPTION	Rotten egg smell (sulphur) from exhaust
POSSIBLE CAUSE	• Electrical connectors are disconnected or connected poorly • Charcoal canister malfunction • Vacuum lines are disconnected or connected improperly. • Improper fuel pressure • Poor fuel quality **Warning** **The following troubleshooting flow chart contains fuel system diagnosis and repair procedures. Read following warnings before servicing fuel system:** • **Fuel vapor is hazardous. It can easily ignite, causing serious injury and damage. Always keep sparks and flames away from fuel.** • **Fuel line spills and leakage are dangerous. Fuel can ignite and cause serious injuries or death and damage. Fuel can also irritate skin and eyes. To prevent this, always complete "BEFORE REPAIR PROCEDURE" and "AFTER REPAIR PROCEDURE" described in this manual.** **(See 01–14B–4 BEFORE REPAIR PROCEDURE [L3 WITH TC].)** **(See 01–14B–5 AFTER REPAIR PROCEDURE [L3 WITH TC].)** **Caution** • **Disconnecting/connecting the quick release connector without cleaning it may possibly cause damage to the fuel pipe and quick release connector. Always clean the quick release connector joint area before disconnecting/connecting, and make sure that it is free of foreign material.**

Diagnostic procedure

STEP	INSPECTION	RESULTS	ACTION
1	Are any driveability or exhaust smoke concerns present?	Yes	Go to the appropriate flow chart.
		No	Go to the next step.
2	Inspect for the following: • Electrical connections • Vacuum lines • Fuel quality Are all items normal?	Yes	Go to the next step.
		No	Service if necessary. Repeat Step 2.
3	Connect the WDS or equivalent to the DLC-2. Turn the ignition switch to the ON position (Engine off). Retrieve any DTCs. Are there any DTCs displayed?	Yes	**DTC is displayed:** Go to the appropriate DTC test.
		No	**No DTC is displayed:** Go to the next step.
4	Access and monitor FUEL_PRES PID. Is the FUEL_PRES PID value within the specified? (See 01–40B–6 Using the WDS or Equivalent.)	Yes	Go to Step 8.
		No	Go to the next step.
5	Is vehicle accelerate performance normally?	Yes	Go to the next step.
		No	Go to Step 7.
6	Inspect the fuel pressure sensor. (See 01–40B–34 FUEL PRESSURE SENSOR INSPECTION [L3 WITH TC].) Is the fuel pressure sensor normal?	Yes	Go to Step 8.
		No	Go to the next step.
7	Replace the high pressure fuel pump. Monitor FUEL_PRES PID. Is the FUEL_PRES PID value within the specified? (See 01–40B–6 Using the WDS or Equivalent.)	Yes	Troubleshooting is completed. Go to Step 9.
		No	Go to the next step.
8	Inspect the charcoal canister for fuel saturation. Is excess amount of liquid fuel present in canister?	Yes	Replace the charcoal canister.
		No	Inspect the fuel tank vent system. If fuel tank vent system is normal, suggest trying a different brand since sulfur content can vary in different fuels. If fuel tank vent system is not normal, repair or replace the malfunctioning parts.
9	Verify test results. • If normal, return to the diagnostic index to service any additional symptoms. • If a malfunction remains, inspect the related Service Bulletins and/or On-line Repair Information and perform the repair or diagnosis. — If the vehicle is repaired, troubleshooting is completed. — If the vehicle is not repaired or additional diagnostic information is not available, reprogram the PCM if a later calibration is available. Retest.Ie. Retest.		

NO.27 FUEL REFILL CONCERNS [L3 WITH TC]

E6U010318881WA6

27	Fuel refill concerns
DESCRIPTION	• Fuel tank does not fill smoothly.
POSSIBLE CAUSE	• Clogged EVAP pipes • Nonreturn valve malfunction • Improper use of fuel nozzle • Inadequate fuel filling speed **Warning** • **The following troubleshooting flow chart contains the fuel system diagnosis and repair procedures. Read the following warnings before servicing the fuel system:** **— Fuel vapor is hazardous. It can easily ignite, causing serious injury and damage. Always keep sparks and flames away from fuel.** **— Fuel line spills and leakage are dangerous. Fuel can ignite and cause serious injuries or death and damage. Fuel can also irritate skin and eyes. To prevent this, always complete "BEFORE REPAIR PROCEDURE" and "AFTER REPAIR PROCEDURE" described in this manual.** **(See 01–14B–4 BEFORE REPAIR PROCEDURE [L3 WITH TC].)** **(See 01–14B–5 AFTER REPAIR PROCEDURE [L3 WITH TC].)** **Caution** • **Disconnecting/connecting the quick release connector without cleaning it may possibly cause damage to the fuel pipe and quick release connector. Always clean the quick release connector joint area before disconnecting/connecting, and make sure that it is free of foreign material.**

Diagnostic procedure

STEP	INSPECTION		ACTION
1	Connect the WDS or equivalent to the DLC-2. Turn the ignition switch to the ON position (Engine off). Retrieve any DTCs. Are there any DTCs displayed?	Yes	**DTC is displayed:** Go to the appropriate DTC test.
		No	**No DTC is displayed:** Go to the next step.
2	Remove the fuel-filler pipe. Make sure nonreturn valve is installed properly. Inspect the nonreturn valve operation. Is nonreturn valve normal?	Yes	Inspect for the following: • Improper use of fuel nozzle • Inadequate fuel filling speed
		No	**Nonreturn valve is installed improperly:** • Reinstall the nonreturn valve to proper position. **Nonreturn valve does not operate properly:** • Replace the nonreturn valve.
3	Verify test results. • If normal, return to the diagnostic index to service any additional symptoms. • If a malfunction remains, inspect the related Service Bulletins and/or On-line Repair Information and perform the repair or diagnosis. — If the vehicle is repaired, troubleshooting is completed. — If the vehicle is not repaired or additional diagnostic information is not available, reprogram the PCM if a later calibration is available. Retest.Ie. Retest.		

NO.28 FUEL FILLING SHUT OFF ISSUES [L3 WITH TC]

E6U010318881WA7

28	Fuel filling shut off issues
DESCRIPTION	• Fuel does not shut off properly.
POSSIBLE CAUSE	• Clogged EVAP pipes • Nonreturn valve malfunction • Fuel shut-off valve malfunction • Fuel nozzle malfunction • Fuel nozzle is not inserted correctly. **Warning** • **The following troubleshooting flow chart contains the fuel system diagnosis and repair procedures. Read the following warnings before servicing the fuel system:** **— Fuel vapor is hazardous. It can easily ignite, causing serious injury and damage. Always keep sparks and flames away from fuel.** **— Fuel line spills and leakage are dangerous. Fuel can ignite and cause serious injuries or death and damage. Fuel can also irritate skin and eyes. To prevent this, always complete "BEFORE REPAIR PROCEDURE" and "AFTER REPAIR PROCEDURE" described in this manual.** **(See 01–14B–4 BEFORE REPAIR PROCEDURE [L3 WITH TC].)** **(See 01–14B–5 AFTER REPAIR PROCEDURE [L3 WITH TC].)** **Caution** • **Disconnecting/connecting the quick release connector without cleaning it may possibly cause damage to the fuel pipe and quick release connector. Always clean the quick release connector joint area before disconnecting/connecting, and make sure that it is free of foreign material.**

Diagnostic procedure

STEP	INSPECTION		ACTION
1	Connect the WDS or equivalent to the DLC-2. Turn the ignition switch to the ON position (Engine off). Retrieve any DTCs. Are there any DTCs displayed?	Yes	**DTC is displayed:** Go to the appropriate DTC test.
		No	**No DTC is displayed:** Go to the next step.
2	Remove the fuel-filler pipe. Make sure nonreturn valve is installed properly. Inspect the nonreturn valve operation. Is nonreturn valve normal?	Yes	Inspect for the following: • Improper use of fuel nozzle • Fuel is not inserted correctly. • Inspect fuel shut-off valve.
		No	**Nonreturn valve is installed improperly:** • Reinstall the nonreturn valve to proper position. **Nonreturn valve does not operate properly:** • Replace the nonreturn valve.
3	Verify test results. • If normal, return to the diagnostic index to service any additional symptoms. • If a malfunction remains, inspect the related Service Bulletins and/or On-line Repair Information and perform the repair or diagnosis. — If the vehicle is repaired, troubleshooting is completed. — If the vehicle is not repaired or additional diagnostic information is not available, reprogram the PCM if a later calibration is available. Retest.		

NO.29 CONSTANT VOLTAGE [L3 WITH TC]

E6U010318881WA8

29	CONSTANT VOLTAGE
DESCRIPTION	Incorrect constant voltage
POSSIBLE CAUSE	• Constant voltage circuit malfunction **Note** • MAP sensor, fuel pressure sensor and accelerator position sensor use constant voltage.

Diagnostic procedure

STEP	INSPECTION	RESULTS	ACTION
1	Disconnect the MAP sensor connector where constant voltage circuit inspection failed. Turn the ignition switch to the ON position. Measure voltage between the following MAP sensor connector terminals: • Constant voltage terminal - ground terminal Is constant voltage **greater than 6.0 V**?	Yes	Go to Step 13.
		No	Go to the next step.
2	Is voltage across battery terminals **greater than 10.5 V**?	Yes	Go to the next step.
		No	Inspect the charging system.
3	Turn the ignition switch off. Leave the MAP sensor connector disconnected. Disconnect the fuel pressure sensor and accelerator position sensor connectors. Measure the voltage between battery positive terminal and ground (between PCM and MAP sensor) circuit at appropriate sensor connector. Is the voltage **greater than 10.5 V** and **within 1.0 V** of battery voltage?	Yes	Go to the next step.
		No	Go to Step 8.
4	**Note** • Purpose of this step is to determine if WDS or equivalent is communicating with PCM. Turn the ignition switch to the ON position. Attempt to access ECT PID. Can ECT PID be accessed?	Yes	Go to Step 7.
		No	Go to the next step.
5	Turn the ignition switch off. Disconnect the manifold pressure sensor and PCM connectors. Turn the ignition switch to the ON position. Measure the voltage between PCM terminals, 2Y and 2AB. Is the voltage **greater than 10.5 V**?	Yes	Go to the next step.
		No	Repair open circuit between PCM terminal 2Y and main relay.
6	Leave the MAP sensor and the PCM connectors disconnected. Measure the resistance between PCM terminals, 2Y and 2AB. Is the resistance **greater than 10,000 ohms**?	Yes	Inspect for the constant voltage at suspect sensor connector again.
		No	Repair the constant voltage circuit short to ground.
7	Turn the ignition switch off. Leave the MAP sensor disconnected. Disconnect the PCM connector. Measure the resistance between PCM terminal, 1J and constant voltage circuit at appropriate sensor connector. Is the resistance **less than 5.0 ohms**?	Yes	Inspect for the constant voltage at suspect sensor connector again.
		No	Repair the open constant voltage circuit.
8	**Note** • Purpose of this step is to determine if WDS or equivalent is communicating with PCM. Reconnect the MAP sensor connector. Turn the ignition switch to the ON position. Access the ECT PID. Can ECT PID be accessed?	Yes	Go to the next step.
		No	Go to Step 11.

STEP	INSPECTION	RESULTS	ACTION
9	Are the DTCs present for two or more sensors connected to PCM terminal, 2H? Sensor connected to PCM terminal, 2H. • IAT sensor (P0112, P0113) • Boost air temperature sensor (P0097, P0098) • FHO2S (P0131, P0132) • RHO2S (P0137, P0138) • MAP sensor (P0107, P0108) • ECT sensor (P0117, P0118) • Accelerator position sensor (P2122, P2123, P2127, P2128)	Yes	Go to the next step.
		No	Repair the open ground circuit to sensor where constant voltage circuit inspection failed.
10	Turn the ignition switch off. Disconnect the WDS or equivalent from the DLC-2. Disconnect the PCM connector. Measure the resistance between ground circuit at appropriate sensor connector and PCM terminal, 2H. Is resistance **less than 5.0 ohms**?	Yes	Reconnect the sensor connector. Go to appropriate DTC test.
		No	Repair open ground circuit.
11	Turn the ignition switch off. Disconnect the PCM connector. Measure the resistance between battery negative terminal and PCM terminals, 4X, 2AB and 2AC. Is each resistance **less than 5.0 ohms**?	Yes	Go to the next step.
		No	Repair open ground circuit.
12	Turn the ignition switch off. Measure the resistance between ground circuit at the following sensor connectors and ground: • IAT sensor (integrated in MAF sensor) • Boost air temperature sensor (integrated in MAP sensor) • FHO2S • RHO2S • MAP sensor • ECT sensor • APP sensor	Yes	Ground circuits are normal. Inspect for the constant voltage at suspect sensor connector again.
		No	Inspect for the open ground circuit.
13	Turn the ignition switch off. Disconnect the MAP sensor and integrated the PCM connectors. Turn the ignition switch to the ON position. Measure the voltage between constant voltage circuit at the MAP sensor connector and battery negative terminal. Is the voltage **less than 0.5 V**?	Yes	Inspect for the constant voltage at suspect sensor connector again.
		No	Repair the constant voltage circuit shorted to power in harness.
14	Verify test results. • If normal, return to the diagnostic index to service any additional symptoms. • If a malfunction remains, inspect the related Service Bulletins and/or On-line Repair Information and perform the repair or diagnosis. — If the vehicle is repaired, troubleshooting is completed. — If the vehicle is not repaired or additional diagnostic information is not available, reprogram the PCM if a later calibration is available. Retest.		

NO.30 SPARK PLUG CONDITION [L3 WITH TC]

E6U010318881WA9

30	SPARK PLUG CONDITION
DESCRIPTION	Incorrect spark plug condition
POSSIBLE CAUSE	**Note** • Inspecting the condition of the spark plugs can determine whether a problem is related to a specific cylinder or possibly all cylinders. **Wet/carbon stuck on specific plug:** • Spark—Weak, not visible • Air/fuel mixture—Excessive fuel injection volume • Compression—No compression, low compression • Malfunctioning spark plug **Grayish white with specific plug:** • Air/fuel mixture—Insufficient fuel injection volume • Malfunctioning spark plug **Wet/carbon is stuck on all plugs:** • Spark—Spark weak • Air/fuel mixture—Too rich • Compression—Low compression • Clogging in intake/exhaust system **Grayish white with all plugs:** • Air/fuel mixture—Too lean **Warning** **The following troubleshooting flow chart contains the fuel system diagnosis and repair procedures. Read the following warnings before servicing the fuel system:** • **Fuel vapor is hazardous. It can easily ignite, causing serious injury and damage. Always keep sparks and flames away from fuel.** • **Fuel line spills and leakage are dangerous. Fuel can ignite and cause serious injuries or death and damage. Fuel can also irritate skin and eyes. To prevent this, always complete "BEFORE REPAIR PROCEDURE" and "AFTER REPAIR PROCEDURE" described in this manual.** **(See 01–14B–4 BEFORE REPAIR PROCEDURE [L3 WITH TC].)** **(See 01–14B–5 AFTER REPAIR PROCEDURE [L3 WITH TC].)** **Caution** • **Disconnecting/connecting the quick release connector without cleaning it may possibly cause damage to the fuel pipe and quick release connector. Always clean the quick release connector joint area before disconnecting/connecting, and make sure that it is free of foreign material.**

Diagnostic procedure

STEP	INSPECTION	RESULTS	ACTION
1	Remove all the spark plugs. Inspect the spark plug condition. Is the spark plug condition normal?	Yes	Troubleshooting completed.
		No	**Specific plug is wet or covered with carbon:** Go to the next step. **Specific plug looks grayish white:** Go to Step 9. **All plugs are wet or covered with carbon:** Go to Step 11. **All plugs look grayish white:** Go to Step 19.
2	Is the spark plug wet/covered with carbon from engine oil?	Yes	Inspect all areas related to oil.
		No	Go to the next step.
3	Inspect the spark plugs for the following: • Cracked insulator • Heat range • Air gap • Worn electrode Is the spark plug normal?	Yes	Go to the next step.
		No	Replace the spark plug.
4	Inspect the compression pressure at the suspected malfunctioning cylinder. Is the compression pressure correct? (See 01–10B–9 COMPRESSION INSPECTION [L3 WITH TC].)	Yes	Go to the next step.
		No	Repair or replace the malfunctioning parts.

STEP	INSPECTION	RESULTS	ACTION
5	Install all the spark plugs. Perform the spark test at the suspected malfunctioning cylinder. Is a strong blue spark visible? (Compare with normal cylinder.)	Yes	Go to the next step.
		No	Repair or replace the malfunctioning parts.
6	Access and monitor the FUEL_PRES PID. Is the FUEL_PRES PID value within the specification? (See 01–40B–6 Using the WDS or Equivalent.)	Yes	Inspect the suspected cylinders fuel injector for the following: • Open or short circuit in the fuel injector (See 01–14B–29 FUEL INJECTOR INSPECTION [L3 WITH TC].)
		No	Go to the next step.
7	Inspect the fuel pressure sensor. (See 01–40B–34 FUEL PRESSURE SENSOR INSPECTION [L3 WITH TC].) Is the fuel pressure sensor normal?	Yes	Go to the next step.
		No	Replace the delivery pipe.
8	Inspect the high pressure fuel pump. (See 01–14B–20 HIGH PRESSURE FUEL PUMP INSPECTION [L3 WITH TC].) Is the high pressure fuel pump normal?	Yes	Replace the delivery pipe. Retest Step 6 If the FUEL_PRES PID indication is other that the specification, replace the high pressure fuel pump.
		No	Replace the high pressure fuel pump.
9	Inspect the spark plug for the following. • Heat range • Air gap Is the spark plug normal?	Yes	Go to the next step.
		No	Replace the spark plug.
10	Perform the KOER self-test function using the WDS or equivalent. (See 01–02B–9 KOEO/KOER SELF TEST [L3 WITH TC].) Is the suspected cylinder injector circuit related DTC (P0201, P0202, P0203 or P0204) present?	Yes	Go to appropriate the DTC test. (See 01–02B–14 DTC TABLE [L3 WITH TC].)
		No	Inspect the suspect cylinder fuel injector for the following: • Resistance (See 01–14B–29 FUEL INJECTOR INSPECTION [L3 WITH TC].)
11	Is the air cleaner element free of blockage?	Yes	Go to the next step.
		No	Replace the air cleaner element.
12	Perform the spark test. (See 01–03B–80 ENGINE CONTROL SYSTEM OPERATION INSPECTION [L3 WITH TC].) Is a strong blue spark visible at each cylinder?	Yes	Go to the next step.
		No	Repair or replace the malfunctioning parts.
13	Access and monitor the FUEL_PRES PID. Is the FUEL_PRES PID value within the specification? (See 01–40B–6 Using the WDS or Equivalent.)	Yes	Go to step 16.
		No	Go to the next step.
14	Inspect the fuel pressure sensor. (See 01–40B–34 FUEL PRESSURE SENSOR INSPECTION [L3 WITH TC].) Is the fuel pressure sensor normal?	Yes	Go to the next step.
		No	Replace the delivery pipe.
15	Inspect the high pressure fuel pump. (See 01–14B–20 HIGH PRESSURE FUEL PUMP INSPECTION [L3 WITH TC].) Is the high pressure fuel pump normal?	Yes	Replace the delivery pipe. Retest Step 13. If the FUEL_PRES PID indication is other that the specification, replace the high pressure fuel pump.
		No	Replace the high pressure fuel pump.
16	Inspect the following PIDs: • ECT • O2S11 (When engine can be started) • MAF (See 01–40B–6 PCM INSPECTION [L3 WITH TC].) Are the PIDs normal?	Yes	Go to the next step.
		No	Repair or replace the malfunctioning parts.
17	Perform the purge control inspection. (When engine can be started) (See 01–03B–91 Purge Control System Inspection.) Is the purge control correct?	Yes	Go to the next step.
		No	Repair or replace the malfunctioning parts.
18	Perform the compression inspection. Is the compression correct?	Yes	Inspect for clogging in the exhaust system.
		No	Repair or replace the malfunctioning parts.

STEP	INSPECTION	RESULTS	ACTION
19	When the engine cannot be started, inspect the intake-air system for air leakage. When the engine can be started, perform the intake manifold vacuum inspection. Is air sucked in from the intake-air system?	Yes	Repair or replace the malfunctioning part.
		No	Go to the next step.
20	Access and monitor the FUEL_PRES PID. Is the FUEL_PRES PID value within the specification? (See 01–40B–6 Using the WDS or Equivalent.)	Yes	Inspect for the following PIDs: • ECT • O2S11 • O2S12 • MAF (See 01–40B–6 PCM INSPECTION [L3 WITH TC].) Inspect the PCM ground condition.
		No	Go to the next step.
21	Is vehicle accelerate performance normally?	Yes	Go to the next step.
		No	Go to Step 13.
22	Inspect the fuel pressure sensor. (See 01–40B–34 FUEL PRESSURE SENSOR INSPECTION [L3 WITH TC].) Is the fuel pressure sensor normal?	Yes	Go to the next step.
		No	Replace the delivery pipe.
23	Replace the high pressure fuel pump. Monitor FUEL_PRES PID. Is the FUEL_PRES PID value within the specified? (See 01–40B–6 Using the WDS or Equivalent.)	Yes	Troubleshooting is completed. Go to Step 16.
		No	Inspect following PIDs. • ECT • O2S11 • O2S12 • MAF (See 01–40B–6 Using the WDS or Equivalent.) Inspect PCM ground condition.
24	Verify test results. • If normal, return to the diagnostic index to service any additional symptoms. • If a malfunction remains, inspect the related Service Bulletins and/or On-line Repair Information and perform the repair or diagnosis. — If the vehicle is repaired, troubleshooting is completed. — If the vehicle is not repaired or additional diagnostic information is not available, reprogram the PCM if a later calibration is available. Retest.		

ENGINE CONTROL SYSTEM OPERATION INSPECTION [L3 WITH TC]

E6U010318881WB0

Input Signal System Investigation Procedure

1. Find an unusual signal. (See 01–03B–80 Finding unusual signals.)
2. Locate the source. (See 01–03B–80 Locating the source of unusual signals.)
3. Repair or replace the defective part.
4. Confirm that the unusual signal has been erased.

Finding unusual signals

While referring to 01–02B–7 ON-BOARD DIAGNOSTIC TEST [L3 WITH TC], use the PID/DATA monitor and record function to inspect the input signal system relating to the problem.

1. Start the engine and idle the vehicle. You can assume that any signals that are out of specification by a wide margin are unusual.
2. When recreating the problem, any sudden change in the monitor input signals that is not consciously created by the driver can be determined as unusual.

Locating the source of unusual signals

Caution

- **Compare the WDS or equivalent monitor voltage with the measurement voltage using the digital measurement system function. If you use another tester, a misreading may occur.**
- **When measuring the voltage, attach the tester ground to the ground of the PCM that is being tested, or to the engine itself. If this is not done, the measured voltage and actual voltage may differ**
- **After connecting the pin to a waterproof coupler, confirm continuity and measure the voltage, and inspect the waterproof connector for cracks. If there are any, use sealant to fix them. Failure to do this may result in deterioration of the wiring harness or terminal from water damage, leading to problems with the vehicle.**

Variable resistance type 1 (TP sensor and EGR boost sensor)

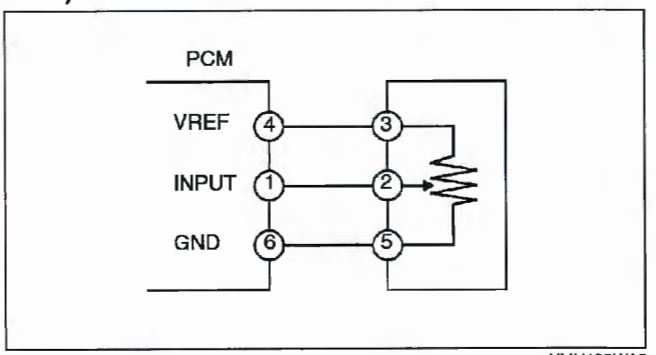

YMU103WA5

Investigate the input signal system for variable resistance type 1

1. When an unusual signal is received, measure the #1 PCM terminal voltage.
   - If the #1 terminal voltage and the WDS or equivalent monitor voltage are the same, proceed to the next step.
   - If there is a difference of **0.5 V or more**, inspect for the following points concerning the PCM connector:
     — Female terminal opening is loose.
     — Coupler (pin holder) damage
     — Pin discoloration (blackness)
     — Wiring harness/pin crimp is loose or disconnected.
2. Measure the #2 sensor terminal voltage.
   - If there is a **0.5 V or more** difference between the sensor and WDS or equivalent voltages, inspect the wiring harness for open or short circuits.
   - If the sensor and WDS or equivalent voltages are the same, inspect for the following points concerning the sensor connector:
     — Female terminal opening is loose.
     — Coupler (pin holder) damage
     — Pin discoloration (blackness)
   - If there are no problems, proceed to next investigation below.

Investigate the standard power supply system for variable resistance type 1

- Confirm that the #3 terminal is at **5 V**.
  — If the measured voltage on the #3 terminal is **5 V**, inspect the following points on the sensor connector.
  — If there is no problem, inspect for the following:
    - Female terminal opening loose
    - Coupler (pin holder) damage
    - Pin discoloration (blackness)
  — If the #3 terminal measures other than **5 V**, inspect for the following:
    - Open or short circuit in wiring harness
    - Wiring harness/pin crimp is loose or disconnected.

Investigate the ground system for variable resistance type 1

- Confirm that terminal sensor #5 is at **0 V**.
  — If it is at **0 V**, inspect the sensor.
    - If necessary, replace the sensor.
  — If not, inspect for the following:
    - Open or short circuit in wiring harness
    - Female terminal opening is loose causing an open or short circuit in wiring harness
    - Coupler (pin holder) damage
    - Pin discoloration (blackness)
    - Wiring harness/pin crimp is loose or disconnected.

Variable resistance type 2 (fuel tank level sensor and mass air flow (MAF) sensor)

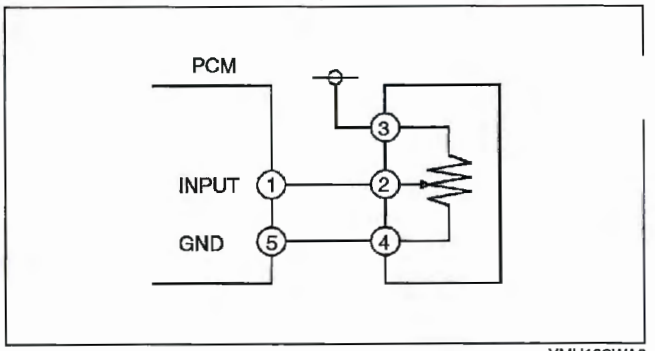

YMU103WA6

Investigate the ground system for variable resistance type 2

- Confirm that terminal sensor #4 is at **0 V**.
  - — If it is at **0 V**, inspect the sensor.
    - If necessary, replace the sensor.
  - — If not at **0 V**, inspect for the following:
    - Open circuit in wiring harness
    - Female terminal opening is loose.
    - Coupler (pin holder) damage
    - Pin discoloration (blackness)
    - Wiring harness/pin crimp is loose or disconnected.

Investigate the input signal system for variable resistance type 2

1. When an unusual signal is received, measure the #1 PCM terminal voltage.
   - If the #1 terminal voltage and the WDS or equivalent monitor voltage are the same, proceed to the next step.
   - If there is a difference of **0.5 V or more**, inspect for the following points concerning the PCM connector:
     - — Female terminal opening is loose.
     - — Coupler (pin holder) damage
     - — Pin discoloration (blackness)
     - — Wiring harness/pin crimp is loose or disconnected.
2. Measure the #2 sensor terminal voltage.
   - If there is a **0.5 V or more** difference between the sensor and WDS or equivalent voltages, inspect the wiring harness for open or short circuits.
   - If the sensor and WDS or equivalent voltages are the same, inspect the following points concerning the sensor connector:
     - — Female terminal opening is loose.
     - — Coupler (pin holder) damage
     - — Pin discoloration (blackness)
     - — Wiring harness/pin crimp is loose or disconnected.
   - If there are no problems, proceed to next investigation below.

Investigate the electrical supply system for variable resistance type 2

- Confirm that the sensor #3 terminal is **B+**.
  - — If the measured voltage on the #3 terminal is **B+**, inspect the following points on the sensor connector.
  - — If there is no problem, inspect for the following:
    - Female terminal opening is loose.
    - Coupler (pin holder) damage
    - Pin discoloration (blackness)
  - — If the #3 terminal measures other than **B+**, inspect the following:
    - Open or short circuit in wiring harness
    - Wiring harness/pin crimp is loose or disconnected.

Thermistor type (IAT sensor and ECT sensor)

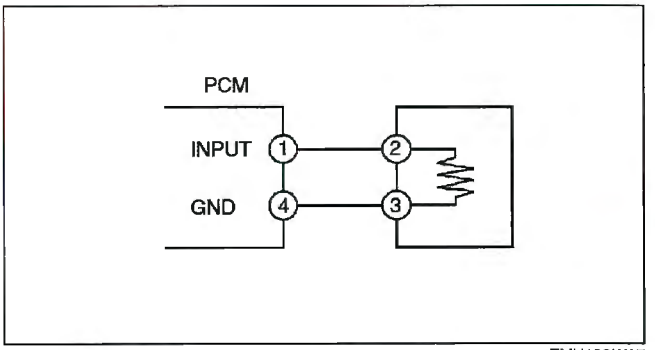

ZMU103WA7

Investigate the input signal system for thermistor type

1. When an unusual signal is received, measure the #1 PCM terminal voltage.
   - If the #1 terminal voltage and the WDS or equivalent monitor voltage are the same, proceed to the next step.
   - If there is a difference of **0.5 V or more**, inspect the following points concerning the PCM connector:
     — Female terminal opening loose
     — Coupler (pin holder) damage
     — Pin discoloration (blackness)
     — Wiring harness/pin crimp is loose or disconnected.
2. Measure the #2 sensor terminal voltage.
   - If there is a **0.5 V or more** difference between the sensor and WDS or equivalent voltages, inspect the wiring harness for open or short circuits.
   - If the sensor and WDS or equivalent voltages are the same, inspect the following points concerning the sensor connector:
     — Female terminal opening is loose.
     — Coupler (pin holder) damage
     — Pin discoloration (blackness)
     — Wiring harness/pin crimp is loose or disconnected.
   - If there are no problems, proceed to next investigation below.

Investigate the ground system for thermistor type

- Confirm that terminal sensor #3 is at **0 V**.
  — If it is at **0 V**, inspect the sensor. If necessary, replace the sensor.
  — If not, inspect for the following:
    - Open circuit in wiring harness
    - Female terminal opening is loose.
    - Coupler (pin holder) damage
    - Pin discoloration (blackness)
    - Wiring harness/pin crimp is loose or disconnected.

VSS

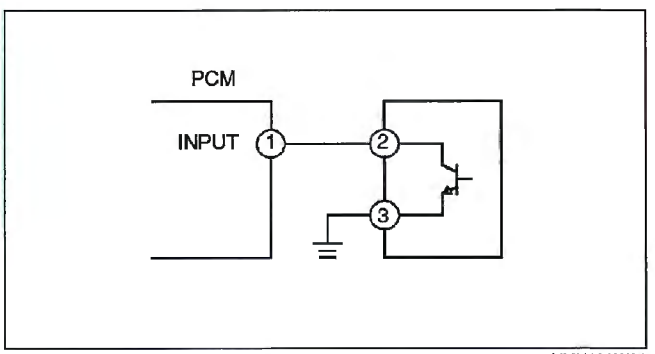

YMU103WA8

1. Measure the #1 PCM terminal voltage and confirm that it is at **0 V** or **5 V** when the ignition switch to the ON position and the engine is idling.
   - If it is at **0 V** or **5 V**, intermittent concern exists. (See 01–03B–6 INTERMITTENT CONCERN TROUBLESHOOTING [L3 WITH TC].)
   - If not, inspect the following points concerning the PCM connector.
   - If there is no problem, inspect for the following:
     — Female terminal opening is loose.
     — Coupler (pin holder) damage
     — Pin discoloration (blackness)
     — Wiring harness/pin crimp is loose or disconnected.
2. Measure the #2 sensor terminal voltage and confirm that it is at **0 V** or **5 V** when the ignition switch to the ON position and the engine is idling.
   - If it is at **0 V** or **5 V**, intermittent concern exists. (See 01–03B–6 INTERMITTENT CONCERN TROUBLESHOOTING [L3 WITH TC].)
   - If not, inspect the following points concerning the sensor connector:
   - If there is no problem, inspect for the following.
     — Female terminal opening is loose.
     — Coupler (pin holder) damage
     — Pin discoloration (blackness)
     — Wiring harness/pin crimp is loose or disconnected.
3. Confirm that the #3 terminal switch voltage is at **0 V**.
   - If it is at **0 V**, inspect the sensor. If necessary, replace the sensor.
     — If necessary, replace the sensor.
   - If not, inspect for the following:
     — Open circuit in wiring harness
     — Female terminal opening is loose.
     — Coupler (pin holder) damage
     — Pin discoloration (blackness)
     — Wiring harness/pin crimp is loose or disconnected.

Main Relay Operation Inspection

1. Verify that the main relay clicks when the ignition switch is turned to ON position and then off.
   - If there is no operation sound, inspect the following:
     — Main relay (See 09–21–7 RELAY INSPECTION.)
     — Wiring harness and connector between ignition switch and main relay terminal A.
     — Wiring harness and connector between PCM terminal 2X and main relay terminal E.

Intake Manifold Vacuum Inspection

1. Verify air intake hoses are installed properly.
2. Start the engine and run it is idling.
3. Disconnect the vacuum hose between the intake manifold and purge solenoid valve from the intake manifold side.
4. Connect a vacuum gauge to the intake manifold and measure the intake manifold vacuum.
   - If not as specified, inspect the following:

Specification
More than 60 kPa {450 mmHg, 18 inHg}

Note
- Air suction can be located by the engine speed change when lubricant is sprayed on the area where suction is occurring.
  — Air suction at throttle body, charge air cooler, intake manifold and PCV valve installation points
  — EGR valve (stuck open)
  — Engine compression
  (See 01–10B–9 COMPRESSION INSPECTION [L3 WITH TC].)

Electronic Throttle Control System Inspection

Engine coolant temperature compensation inspection

1. Connect the WDS or equivalent to the DLC-2.
   Select the following PIDs:
   - ECT
   - IAT
   - RPM
3. Verify that the engine is cold, then start the engine.
4. Verify that the engine speed decreases as the engine warms up.
   - If the engine speed does not decrease or decreases slowly, inspect the following:
     — ECT sensor and related wiring harness
     (See 01–40B–30 ENGINE COOLANT TEMPERATURE (ECT) SENSOR INSPECTION [L3 WITH TC].)
     — Electronic throttle body and related wiring harness
     (See 01–13B–12 THROTTLE ACTUATOR INSPECTION [L3 WITH TC].)

Load compensation inspection

1. Start the engine and run it is idling.
2. Connect the WDS or equivalent to the DLC-2.
3. Verify that DTC P0506 or P0507 is not displayed.
   - If DTC P0506, or P0507 is displayed, perform the DTC inspection.
     (See 01–02B–14 DTC TABLE [L3 WITH TC].)
4. Select the RPM PID.

Note
- Excludes temporary idle speed drop just after the loads are turned on.

5. Verify that the engine speed is within the specification under each load condition.
   - If the load condition is not as specified, inspect the following:
     — A/C switch and related wiring harness
     (See 07–40–39 CLIMATE CONTROL UNIT INSPECTION [L3 WITH TC].)
     — Fan switch and related wiring harness
     (See 07–40–39 CLIMATE CONTROL UNIT INSPECTION [L3 WITH TC].)
     — PSP switch and related wiring harness
     (See 01–40B–24 POWER STEERING PRESSURE (PSP) SWITCH INSPECTION [L3 WITH TC].)

Engine speed

Load condition		Engine speed (rpm)*1
No load		650—750
E/L operating		650—750
P/S operating		650—750
A/C operating*2	Refrigerant pressure low*3	700—800
	Refrigerant pressure high*4	725—825

*1 : Neutral
*2 : A/C switch and fan switch are on.
*3 : Refrigerant pressure switch (middle pressure) is off.
*4 : Refrigerant pressure switch (middle pressure) is on.

Throttle position (TP) sweep inspection

1. Connect the WDS or equivalent to the DLC-2.
2. Reform the KOER self-test function.
   (See 01–02B–9 KOEO/KOER SELF TEST [L3 WITH TC].)
3. Verify that none of the following DTCs are displayed:
   - P0122, P0123, P0222, P0223, P2100, P2101, P2102, P2103, P2107, P2108, P2119, P2122, P2123, P2127, P2128, P2135, P2138
     — If any one DTC is displayed, perform the DTC inspection.
4. Access the TP_REL PID.
5. Verify that the PID reading is within the CTP value. (See 01–40B–6 PCM INSPECTION [L3 WITH TC].)
   - If the PID reading is out of range, perform the following:
     — Remove the air duct from the throttle valve body.
     — Verify that the throttle valve opens when the accelerator pedal is depressed.
       - If the throttle valve opens, inspect the throttle position sensor and the related wiring harness.
       - If the throttle valve does not open, inspect the throttle actuator control motor and the related wiring harness.

6. Gradually depress the throttle pedal and verify that the PID reading increases lineally.
   - If the PID reading drops momentarily, inspect the following:
     — Throttle position sensor
7. Fully depress the throttle pedal and verify that the PID reading is within the WOT value. (See 01–40B–6 PCM INSPECTION [L3 WITH TC].)
   - If the PID reading is out of range, perform the following:
     — Remove the air duct from throttle valve body with connector connected.
     — Verify that the throttle valve opens when throttle pedal is depressed.
       - If the throttle valve opens, inspect the throttle position sensor and the related wiring harness.
       - If the throttle valve does not open, inspect the throttle actuator control motor and the related wiring harness.

Variable Swirl System Operation Inspection

1. Connect the WDS or equivalent to the DLC-2.
2. Access the ECT PID.
3. Verify that the ECT PID is **below 60°C {140°F}**.
4. Start the engine.
5. Inspect the rod operation under the following conditions:

Rod operation

Engine speed	3,750 rpm	
	Below	Above
Shutter valve actuator	Operate	Not operate

If the rod operation is not specified, inspect as follows:

1. Perform the KOER self-test using the WDS or equivalent and verify that DTCs No. P2004, P2006, P2009 or P2010 are not displayed.
   - If DTC No. P2004, P2006, P2009 or P2010 are displayed, perform DTC inspection. (See 01–02B–14 DTC TABLE [L3 WITH TC].)

If simulation function of WDS or equivalent is used:

1. Turn the ignition switch to the ON position. (Engine off)
2. Turn the variable swirl solenoid valve from off to on using the IMRC PID and verify that the operation sound of the solenoid valve is heard.
   - If the operation sound is not heard, replace the variable swirl solenoid valve. (See 01–13B–13 VARIABLE SWIRL SOLENOID VALVE INSPECTION [L3 WITH TC].)
   - If the operation sound is not heard, inspect the following:
     — Vacuum hose and vacuum chamber for looseness or damage
     — Shutter valve actuator (See 01–13B–13 VARIABLE SWIRL SHUTTER VALVE ACTUATOR INSPECTION [L3 WITH TC].)
     — Check valve is stuck open or closed
     — Shutter valve cannot move smoothly

If simulation function of WDS or equivalent is not used:

1. Inspect variable swirl solenoid valve. (See 01–13B–13 VARIABLE SWIRL SOLENOID VALVE INSPECTION [L3 WITH TC].)
   - If the variable swirl solenoid valve is not normal, replace the variable swirl solenoid valve.
   - If the variable swirl solenoid valve is normal, inspect the following:
     — Vacuum hose and vacuum chamber for looseness or damage
     — Shutter valve actuator (See 01–13B–13 VARIABLE SWIRL SHUTTER VALVE ACTUATOR INSPECTION [L3 WITH TC].)
     — Check valve is stuck open or closed
     — Shutter valve cannot move smoothly

Fuel Injector Operation Inspection
If simulation function of WDS or equivalent is used:

STEP	INSPECTION		ACTION
1	Start the engine and warm it up until normal operating temperature. Connect the WDS or equivalent to DLC-2. Select the INJ#1, INJ#2, INJ#3, and INJ#4 PIDs. Turn the fuel injector from on to off using the PIDs for each cylinder. Does the engine speed drop?	Yes	Fuel injector work properly
		No	**Engine speed does not drop an any cylinder:** Go to the next steps. **Engine speed drops on some cylinders:** Go to step 3.
2	Perform the Main Relay Operation Inspection. (See 01–03B–84 Main Relay Operation Inspection.) Does the main relay work properly?	Yes	Go to the next step.
		No	Repair or replace the malfunctioning parts.
3	Inspect the fuel injector of the suspected cylinder. (See 01–14B–29 FUEL INJECTOR INSPECTION [L3 WITH TC].) Is the fuel injector normal?	Yes	Inspect the following for the suspected cylinder. • Fuel injector power and/or ground systems related wiring harness and connectors. If all items normal replace the injector driver module. (See 01–40B–21 INJECTOR DRIVER MODULE REMOVAL/INSTALLATION [L3 WITH TC].)
		No	Replace the fuel injector. (See 01–14B–25 FUEL INJECTOR REMOVAL/ INSTALLATION [L3 WITH TC].)
4	Perform KOER self-test function using the WDS or equivalent. (See 01–02B–9 KOEO/KOER SELF TEST [L3 WITH TC].) Are DTCs P0201, P0202, P0203 and/or P0204 present?	Yes	Go to the appropriate DTC test. (See 01–02B–14 DTC TABLE [L3 WITH TC].)
		No	Go to the next step.
5	Inspect the fuel injector of the suspected cylinder. (See 01–14B–29 FUEL INJECTOR INSPECTION [L3 WITH TC].) Is the fuel injector normal?	Yes	Inspect the following for the suspected cylinder: • PCM terminals (pulled-out pins, corrosion) • Injector driver module terminals (pulled-out pins, corrosion) • Fuel injector terminals (pulled-out pins, corrosion) If all items are normal replace the injector driver module. (See 01–40B–21 INJECTOR DRIVER MODULE REMOVAL/INSTALLATION [L3 WITH TC].)
		No	Replace the fuel injector. (See 01–14B–25 FUEL INJECTOR REMOVAL/ INSTALLATION [L3 WITH TC].)

If simulation function of WDS or equivalent is not used:

STEP	INSPECTION		ACTION
1	Perform the KOER self-test function using the WDS or equivalent. (See (0102) KOEO/KOER SELF-TEST.) Are DTCs P0201, P0202, P0203 and/or P0204 present?	Yes	Go to appropriate DTC test. (See 01–02B–14 DTC TABLE [L3 WITH TC].)
		No	Go to the next step.
2	Inspect the fuel injector for each cylinder. (See 01–14B–29 FUEL INJECTOR INSPECTION [L3 WITH TC].) Is the fuel injector normal?	Yes	Go to the next step.
		No	Replace the fuel injector. (See 01–14B–25 FUEL INJECTOR REMOVAL/ INSTALLATION [L3 WITH TC].)
3	Inspect the following for the suspected cylinder: • Fuel injector power and/or ground system related wiring harnesses and connectors. • PCM terminals (pulled-out pins, corrosion) • Injector driver module terminals (pulled-out pins, corrosion) • Fuel injector terminals (pulled-out pins, corrosion) Are all items normal?	Yes	Replace the injector driver module. (See 01–40B–21 INJECTOR DRIVER MODULE REMOVAL/INSTALLATION [L3 WITH TC].)
		No	Repair or replace malfunctioning parts.

Fuel Cut Control System Inspection

Note
- This inspection has to be performed after the Fuel Injector Operation Inspection.

If simulation function of WDS or equivalent is used:
1. Warm up the engine and idle it.
2. Connect the WDS or equivalent to the DLC-2.
3. Select the RPM and the FUELPW1 PIDs.
4. Monitor both PIDs while performing the following steps.
   1. Depress the accelerator pedal and increase the RPM PID to **4,000 rpm.**
   2. Quickly release the accelerator pedal (brake pedal is not depressed) and verify that the FUELPW1 PID is **0 msec.**, and **2—5 msec.** when the RPM PID drops **below 1,200 rpm**.
   - If not as specified, inspect the following.
     — ECT sensor and related wiring harness
     (See 01–40B–30 ENGINE COOLANT TEMPERATURE (ECT) SENSOR INSPECTION [L3 WITH TC].)
     — Neutral switch and related wiring harness
     (See 01–40B–23 NEUTRAL SWITCH INSPECTION [L3 WITH TC].)
     — Clutch switch and related wiring harness
     (See 01–40B–22 CLUTCH PEDAL POSITION (CPP) SWITCH INSPECTION [L3 WITH TC].)

If simulation function of WDS or equivalent is not used:
1. Warm up the engine and idle it.
2. Measure the fuel injector control signal wave profile using the oscilloscope while performing the following steps.
   1. Depress the accelerator pedal and increase the engine speed to **4,000 rpm**.
   2. Quickly release the accelerator pedal (brake pedal is not depressed) and verify that the wave profile constant **B+**, and the wave appears when the engine speed drops **below 1,200 rpm**.
   (See 01–40B–6 PCM INSPECTION [L3 WITH TC].)
   - If not as specified, inspect the following.
     — ECT sensor and related wiring harness
     (See 01–40B–30 ENGINE COOLANT TEMPERATURE (ECT) SENSOR INSPECTION [L3 WITH TC].)
     — Neutral switch and related wiring harness
     (See 01–40B–23 NEUTRAL SWITCH INSPECTION [L3 WITH TC].)
     — Clutch switch and related wiring harness
     (See 01–40B–22 CLUTCH PEDAL POSITION (CPP) SWITCH INSPECTION [L3 WITH TC].)

Fuel Pump Operation Inspection
If simulation function of WDS or equivalent is not used:
1. Connect the WDS or equivalent to the DLC-2.
2. Remove the fuel-filler cap.
3. Turn the ignition switch to the ON position.
4. Turn the fuel pump relay from off to on using the FP PID and inspect if the operation sound of the fuel pump is heard.
   - If no operation sound is heard, proceed to the next step.
5. Measure the voltage at the wiring harness side fuel pump connector terminal B with the FIP PID turned on.
   - If the voltage is as specified, inspect the following:
     — Fuel pump continuity
     — Fuel pump ground
     — Wiring harness between the fuel pump relay and PCMM terminal 4Q
   - If not as specified, inspect the following:
     — Fuel pump relay
     — Fuel pump speed control relay
     — Wiring harness connector (Main relay-fuel pump relay-fuel pump resister-fuel pump.)

Specification
8.0—11.5 V (Ignition switch at ON)

If simulation function of WDS or equivalent is not used:

Caution
- **Connecting the wrong check connector terminal may possibly cause a malfunction. Carefully connect the specified terminal only.**

1. Short the check connector terminal F/P to body ground using a jumper wire.
2. Remove the fuel-filler cap.

3. Turn the ignition switch to the ON position.
4. Verify that the fuel pump operation sound is heard.
   - If no operation sound is heard, proceed to the next step.

Measure the voltage at wiring harness side fuel pump connector terminal B.

- If the voltage is as specified, inspect the following:
  - — Fuel pump continuity
  - — Fuel pump ground
  - — Wiring harness between the fuel pump relay and PCM terminal, 4Q
- If not as specified, inspect the following:
  - — Fuel pump relay
  - — Fuel pump speed control relay
  - — Wiring harness connector (Main relay – fuel pump relay – fuel pump resister – fuel pump.)

Specification
8.0—11.5 V (Ignition switch at on)

Fuel Pump Control System Inspection
If simulation function of WDS or equivalent is used:

1. Connect the WDS or equivalent to the DLC-2.
2. Turn the ignition switch to the ON position.
3. Select the FP PID.
4. Turn the fuel pump relay from off to on and inspect if the operation sound of the fuel pump relay is heard.
   - If no operation sound is heard, inspect the fuel pump relay.
   - If the fuel pump relay is normal, inspect the following:
     - — Wiring harness and connectors (Main relay – fuel pump relay – PCM terminal 4Q)

If simulation function of WDS or equivalent is not used:

1. Crank the engine and verify that the fuel pump relay operation sound is heard.
2. If the operation sound is not heard, inspect the following:
   - Fuel pump relay
   - Wiring harness and connectors (Main relay – fuel pump relay – PCM terminal 4Q)

el Pump Speed Control Inspection
imulation function of WDS or equivalent is used:

1. Perform the Fuel Pump Operation Inspection.
2. Connect the WDS or equivalent to the DLC-2.
3. Turn the ignition switch to the ON position.
4. Turn the fuel pump speed control relay from off to on using the FPRR PID and verify that the fuel pump speed control relay operation sound is heard.
   - If the operation sound is not heard, inspect the following:
     - — Fuel pump speed control relay
     - — Wiring harness and connectors (Main relay - fuel pump speed control relay - PCM terminal 4P)
5. Start the engine and run it is idling.
6. Remove the fuel-filler cap.
7. Turn the fuel pump speed control relay from off to on using the FPRR PID and inspect if the operation sound frequency of the fuel pump is higher than when the FPRR PID is off.
   - If it cannot be verified, inspect the following:
     - — Fuel pump resister
     - — Wiring harness and connectors (open circuit at fuel pump speed control relay terminal C - fuel pump relay terminal D)

If simulation function of WDS or equivalent is not used:

8. Perform the fuel pump operation inspection.
9. Verify that fuel pump relay operation sound is heard, while cranking the engine.
   - If the operation sound is not heard, inspect the following:
     - — Fuel pump relay
     - — Wiring harnesses and connectors (Main relay—fuel pump relay—PCM terminal 4Q)
10. Remove the fuel-filler cap.
11. Verify that the fuel pump unit operation sound frequency at cranking is higher than during idle.
    - If it cannot verified, inspect for the following:
      - — Fuel pump resister
      - — Fuel pump relay
      - — Wiring harnesses and connectors (open circuit at fuel pump relay terminal C—fuel pump terminal B)

Spark Test

1. Disconnect the fuel pump relay.
2. Disconnect the injector driver module connector.
3. Verify that each ignition coil and connector is connected properly.
4. Inspect the ignition system in the following procedure.
5. Clear the DTC from PCM memory using the WDS or equivalent, after perform the spark test procedures and reconnect the injector driver module connector. (See 01–14B–5 AFTER REPAIR PROCEDURE [L3 WITH TC].)

Warning

- **High voltage in the ignition system can cause strong electrical shock which can result in serious injury. Avoid direct contact to the vehicle body during the following spark test.**

STEP	INSPECTION		ACTION
1	• Disconnect the ignition coil from the spark plugs. • Remove the spark plugs. • Reconnect the spark plugs to the ignition coil. • Ground the spark plugs to the engine. • Is a strong blue spark visible at each cylinder while cranking?	Yes	Ignition system is normal.
		No	**Some cylinders do not spark:** • Go to the next step. **All cylinders do not spark:** • Go to Step 4.
2	• Inspect the spark plugs for damage, wear, carbon deposits and proper plug gap. • Are the spark plugs normal?	Yes	Go to the next step.
		No	Replace spark plugs, then go to Step 1.
3	• Inspect the following wiring harnesses for an open or short circuit: — Ignition coil No.1 terminal C—PCM terminal 3W — Ignition coil No.2 terminal C—PCM terminal 3X — Ignition coil No.3 terminal C—PCM terminal 3Z — Ignition coil No.4 terminal C—PCM terminal 3AA • Are the wiring harnesses normal?	Yes	Inspect and replace the ignition coil. (See 01–18B–2 IGNITION COIL INSPECTION [L3 WITH TC].)
		No	Repair or replace the malfunctioning part, then go to Step 1.
4	• Measure the voltage at terminal A in each ignition coils. • Is the voltage **B+**?	Yes	Go to the next step.
		No	Inspect the power supply circuit of ignition coils.
5	• Does the PCM connector or ignition coil connectors have poor connection?	Yes	Repair or replace the connector, then go to Step 1.
		No	Go to the next step.
6	• Are the following parts normal? — CKP sensor and crankshaft pulley	Yes	Inspect for an open or short circuit in the wiring harness and connector of the CKP sensor.
		No	Repair or replace the malfunctioning part, then go to Step 1.

EGR Control System Inspection

If simulation function of WDS or equivalent is used:

1. Crank the engine and verify that the EGR valve operation (initial operation) sound is heard.
   - If the operation sound is not heard, connect the WDS or equivalent to the DLC-2 and verify that the DTC P0403 is shown. Perform the DTC inspection. (See 01–02B–14 DTC TABLE [L3 WITH TC].)
2. Start the engine run it is idling.
3. Increase the step value of the EGR valve from **0 to 40** using the SEGR PID of the simulation function.
4. Operate the EGR valve and inspect if the engine speed becomes unstable or the engine stalls.
   - If the engine speed does not change, proceed to the following.
     1. Stop the engine.
     2. Remove the EGR valve.
     3. Connect the EGR valve connector.
     4. Turn the ignition switch to the ON position.
     5. Increase the step value of EGR valve from **0 to 40** using SEGRP PID.
     6. Verify that the EGR valve operates according to the SEGRP PID.
        - If the EGR valve is operated, clean the EGR valve and the EGR gas passage.
        - If the EGR valve does not operate, replace the EGR valve.
5. Start the engine and warm it up completely.
6. Access the following PIDs.
   - ECT, RPM, SEGRP, APP1, APP2, TP_REL, VSS
7. Idle the vehicle and verify that the SEGRP value is **0**.

8. Put the vehicle in drive.
9. Depress the accelerator pedal and verify that the SEGRP value increases.
   - If the SEGRP value does not increase, inspect the VSS, TP and ECT PIDs. (See 01–40B–6 PCM INSPECTION [L3 WITH TC].)
. Stop the vehicle and verify that the SEGRP value is returns to **0**.

If simulation function of WDS or equivalent is not used:

11. Verify that EGR valve operation (initial operation) sound is heard when the ignition switch is turned to the ON position.
    - If the operation sound is not heard, connect the WDS or equivalent to the DLC-2 and verify that the DTC P0403 is shown. Perform the DTC inspection. (See 01–02B–14 DTC TABLE [L3 WITH TC].)
12. Start the engine and idle it.
13. Warm up the engine to normal operating temperature.
14. Select the following PIDs:
    - ECT, RPM, SEGRP, APP1, APP2, TP_REL, VSS
15. Let the vehicle idle and verify that the SEGRP value is **0**.
16. Put the vehicle in drive.
17. Depress the accelerator pedal and verify that the SEGRP value is increased.
    - If the EGR valve increases, inspect the following:
      — EGR valve (stuck open or closed)
      — Wiring harness and connectors (Main relay – EGR valve – PCM)
    - If the SEGRP value does not increase, inspect the VSS, APP1, APP2, TP_REL and ECT PIDs. (See 01–40B–6 PCM INSPECTION [L3 WITH TC].)
18. Stop the vehicle and verify that the SEGRP value returns to **0**.

Purge Control System Inspection

If simulation function of WDS or equivalent is used:

1. Start the engine.
2. Disconnect the vacuum hose between the purge solenoid valve and the charcoal canister.
3. Put a finger to the purge solenoid valve and verify that there is no vacuum applied when the engine is cold.
   - If there is a vacuum, inspect the following:
     — Wiring harness and connectors (Purge solenoid valve - PCM terminal 4U)
     — Purge solenoid valve (stuck open)
. Connect the WDS or equivalent to the DLC-2 and verify that the DTC P0403 is displayed. Perform the DTC inspection.
   (See 01–02B–136 DTC P0403 [L3 WITH TC].)
5. Select the EVAPCP PID.
6. Increase the duty value of the purge solenoid valve to **50%** and inspect if the operation sound of the valve is heard.
   - If the operation sound is heard, inspect for loose or damaged vacuum hoses. (Intake manifold - purge solenoid valve - charcoal canister)
   - If the operation sound is not heard, perform the purge solenoid valve inspection. (See 01–16B–10 PURGE SOLENOID VALVE INSPECTION [L3 WITH TC].)
7. Warm up the engine to normal operating temperature.
8. Monitor the EVAPCP PID using the WDS or equivalent, and drive the vehicle **approx. 2000 rpm** for **30 s** or more.
   - If the EVAPCP PID is **0%**, inspect the following.
     — MAF, APP1, APP2, TP_REL and LOAD PIDs.

If simulation function of WDS or equivalent is not used:

9. Start the engine.
10. Disconnect the vacuum hose between the purge solenoid valve and the charcoal canister.
11. Put a finger to the purge solenoid valve and verify that there is no vacuum applied when the engine is cold.
    - If there is vacuum, inspect the following:
      — Wiring harness and connectors (Purge solenoid valve-PCM terminal, 4U)
      — Purge solenoid valve
12. Warm up the engine to the normal operating temperature.
13. Stop the engine.
14. Connect the WDS or equivalent to the DLC-2 and verify that the DTC P0443 is shown. Perform DTC inspection. (See 01–02B–14 DTC TABLE [L3 WITH TC].)
15. Turn the ignition switch to the ON position.
    Select the ECT PID.
. Verify that the engine coolant temperature is above **60°C {140°F}**.
    - If the WDS or equivalent indicates that the temperature is below **60°C {140°F}**, perform the ECT sensor inspection.

18. Set the vehicle on the dynamometer or chassis roller.

Warning

- **When the dynamometer or chassis roller is operating, there is a possibility that the operator may come into contact with or be caught up in the rotating parts, leading to serious injuries or death When performing work while the dynamometer or chassis roller is operating, be careful not to contact or be caught up in any of the rotating parts.**

19. Drive vehicle at an engine speed to **approx. 2000 rpm** for **30 s or more.**
20. Put a finger to the purge solenoid valve and verify that there is no vacuum applied during Step 2.
    - If there is no vacuum, inspect the following:
      — Wiring harness and connector (Main relay – purge solenoid valve – PCM terminal 4T)
      — Purge solenoid valve
      — MAF, APP1, APP2, TP_REL and LOAD PIDs
    - If there is vacuum, inspect the following:
      — Vacuum hose (Purge solenoid valve – charcoal canister)

A/C Cut-off Control System Inspection

1. Start the engine.
2. Turn the A/C switch and fan switch on.
3. Verify that the A/C compressor magnetic clutch actuates.
   - If it does not actuate, go to symptom troubleshooting "No.23 A/C does not work sufficiently".
4. Fully open the throttle valve and verify that the A/C compressor magnetic clutch does not actuate for **2—5 s**.
   - If it actuates, inspect as follows:
     — A/C relay
     — Open or short to ground circuit in the wiring harness and connectors (Ignition switch-A/C relay-PCM terminal 4N)
     — A/C related parts
     — APP1, APP2 PIDs

Cooling Fan Control System Inspection

1. Connect the WDS or equivalent to the DLC-2.
2. Start the engine and warm it up to normal operating temperature.
3. Perform the KOER self-test.
   (See 01–02B–9 KOEO/KOER SELF TEST [L3 WITH TC].)
4. Verify that the DTC P0480 is not shown and the cooling fan operates during the KOER self-test.
   - If DTC P0480 is shown, perform the DTC troubleshooting procedure.
     (See 01–02B–155 DTC P0480 [L3 WITH TC].)
   - If the cooling fans do not operate, proceed to the following:
   1. Verify the clicking sound of the cooling fan relay when the ignition switch is turned from the off to the ON position.
   2. If there is no the clicking sound, inspect the cooling fan relay for an open circuit between the ignition switch and the cooling fan relay.
      - If there is a clicking sound, go to the next step.
      - Inspect the following parts in the indicated order in accordance with fan operation conditions.

Cooling fans do not operate

— Open circuit between the fan control module and the cooling fan relay
— Open circuit between fan control module and ground
— Poor connection of the fan control module connector
— Fan control module
(See 01–12B–10 FAN CONTROL MODULE INSPECTION [L3 WITH TC].)

Cooling fan motor No.1 does not operate

— Open or short to ground circuit between the fan control module and cooling fan motor No.1
— Poor connection of the fan control module connector or cooling fan motor No.1 connector
— Cooling fan motor No.1
(See 01–12B–10 COOLING FAN MOTOR INSPECTION [L3 WITH TC].)
— Fan control module
(See 01–12B–10 FAN CONTROL MODULE INSPECTION [L3 WITH TC].)

Cooling fan motor No.2 does not operate

— Open or short to ground circuit between the fan control module and the cooling fan motor No.2
— Poor connection of the fan control module connector or the cooling fan motor No.1 connector
— Cooling fan motor No.2
(See 01–12B–10 COOLING FAN MOTOR INSPECTION [L3 WITH TC].)
— Fan control module
(See 01–12B–10 FAN CONTROL MODULE INSPECTION [L3 WITH TC].)

Wastegate Control System Operation Inspection
If simulation function of WDS or equivalent is used:

1. Start the engine and run it is idling.
2. Disconnect the hose between the wastegate control solenoid valve and the intake pipe.
   Put a finger to the wastegate control solenoid valve and verify that there is no pressure applied.
   - If there is pressure, inspect the following:
     — Wiring harness and connectors (Wastegate control solenoid valve—PCM terminal 4H)
     — Wastegate control solenoid valve (Stuck open)
4. Warm up the engine to normal operating temperature.
5. Connect the WDS or equivalent to the DLC-2 and verify that DTC P0245 or P0246 are shown. Perform the DTC inspection.
   (See 01–02B–115 DTC P0245 [L3 WITH TC].)
   (See 01–02B–116 DTC P0246 [L3 WITH TC].)
6. Select the VGT PID.
7. Increase the duty value of the wastegate control solenoid valve and inspect if the operation sound of the solenoid valve is heard.
   - If the operation sound is heard, inspect for loose or damaged vacuum hoses. (Wastegate actuator - wastegate control solenoid valve - intake hose)
   - If the operation sound is not heard, perform the wastegate control solenoid valve inspection.
     (See 01–13B–14 WASTEGATE CONTROL SOLENOID VALVE INSPECTION [L3 WITH TC].)
8. Warm up the engine to normal operating temperature.
9. Monitor the VGT and APP PIDs using the WDS or equivalent.
10. Run the engine with the APP PID **above 30%** and verify that the VGT PID value increases from **0%**.
    - If the VGT PID is **0%**, inspect the APP PID.

If simulation function of WDS or equivalent is not used:

11. Start the engine and run it is idling.
12. Disconnect the hose between the wastegate control solenoid valve and the intake pipe.
13. Put a finger to the wastegate control solenoid valve and verify that there is no pressure applied.
    - If there is pressure, inspect the following:
      — Wiring harness and connectors (Wastegate control solenoid valve - PCM terminal 4H)
      — Wastegate control solenoid valve (Stuck open)
14. Warm up the engine to normal operating temperature.
15. Connect the WDS or equivalent to the DLC-2 and verify that the DTC P0245 or P0246 are shown. Perform the DTC inspection.
    (See 01–02B–115 DTC P0245 [L3 WITH TC].)
    (See 01–02B–116 DTC P0246 [L3 WITH TC].)
16. Warm up the engine to normal operating temperature.
17. Monitor the VGT and APP PIDs using the WDS or equivalent.
18. The hose between the wastegate control solenoid valve and intake pipe is disconnected.
19. Run the engine with the APP PID **above 30%** and verify that the VGT PID value increases from **0%** and there is pressure applied.
    - If the VGT PID is **0%**, inspect the TP_REL PID.
    - If there is no pressure applied, inspect for the following:
      — Wastegate control solenoid valve (Stuck closed)
      — Hose connection (Intake hose (turbocharger compressor downstream side) - wastegate actuator - intake hose (turbocharger compressor upstream side))

Variable Valve Timing Control System Operation Inspection
When idling cannot be continued

1. Remove the oil control valve (OCV) and verify that the spool valve is at maximum retard position.
2. Connect the oil control valve (OCV).
3. Turn the ignition switch to the ON position.
4. Verify that the spool valve is at the maximum retard position.
   - If the spool valve is stuck in the advance direction, inspect for the following:
     — Short circuit in wiring harnesses or connectors between the oil control valve (OCV) and the PCM.
5. Inspect the variable timing actuator.

When idling can be continued
If simulation function of WDS or equivalent is used:

1. Warm up the engine to normal operating temperature.
2. Connect the WDS or equivalent to the DLC-2.
   Start the engine and run it is idling.
4. Select the VT DUTY1 PID.
5. Increase the oil control valve (OCV) duty value and verify that the engine idles roughly or stalls.
   - If as specified, inspect the timing belt component (valve timing deviation).
   - If not as specified, go to the next step.

6. Remove the oil control valve (OCV) while the connector is connected.
7. Turn the ignition switch to the ON position.
8. Select VT DUTY1 PID.
9. Increase the oil control valve (OCV) duty value and verify that the spool valve operates in the advance directic
   - If as specified, inspect the following hydraulic passage for clogging and/or leakage.
     — Oil pressure switch - oil control valve (OCV)
     — Oil control valve (OCV) - camshaft
     — Camshaft internal passage
   - If not as specified, inspect the following:
     — Oil control valve (OCV) operation
     — Harness and connectors for open or short circuit (Oil control valve (OCV) - PCM terminal 4S)
10. If they are normal, replace the intake camshaft pulley (with a built-in variable valve timing actuator).

If simulation function of WDS or equivalent is not used:

11. Disconnect the oil control valve (OCV) connector.
12. Warm up the engine and idle it.
13. Apply battery voltage to the oil control valve (OCV) and verify that the engine idles roughly or stalls.
    - If the engine idles roughly or stalls, inspect the timing belt component (valve timing deviation).
    - If the engine does not idle roughly or stalls, go to the next step.
14. Remove the oil control valve (OCV) and perform the spool valve operation inspection.
    (See 01–10B–38 OIL CONTROL VALVE (OCV) INSPECTION [L3 WITH TC].)
    - If not as specified, inspect the following:
      — Oil control valve (OCV)
      — Harnesses and connectors between oil control valve (OCV) and PCM have an open or short circuit.
    - If as specified, inspect the following hydraulic passages for clogging or leakage or both:
      — Oil pressure switch – oil control valve (OCV)
      — Oil control valve (OCV) – camshaft
      — Camshaft internal passage
15. If they are normal, replace the camshaft pulley (with built-in variable valve timing actuator).

Evaporative Emission (EVAP) System Leak Inspection

- To verify that the problem has been fixed properly after repairs, the run-drive cycle or EVAP system leak inspection must be performed.

EVAP system leak inspection using the WDS or equivalent

Note

EVAP system test outline

- The EVAP system test, which can substituted for the run-drive cycle as an EVAP control system repair confirmation method, can be done while operating the WDS in the KOEO (Key On Engine Off) condition instead of actually driving the vehicle.

EVAP system test description

- The EVAP system test finds gas leaks in the system using the PCM to monitor changes in the air pump load current of the EVAP system leak detection pump. This test starts after sending an on-demand test signal from the WDS to the PCM. The PCM controls the air pump and change-over-valve operation and also stores the load current of the air pump as follows:
  i. The PCM turns the air pump on and retrieves the air pump load current value (LDP_MON PID) as a reference current (LDP_REF PID).
  ii. After retrieving the reference current value, the PCM commands the change-over-valve to open, then captures the air pump load current value (LDP_MON PID) as the idle current (LDP_IDL PID). The EVAP system will be pressurized from this phase.
  iii. The PCM continues to monitor the air pump load current value (LDP_MON PID) until the end of the test.
- You can confirm whether any EVAP gas leak has occurred or not by reading the test results.

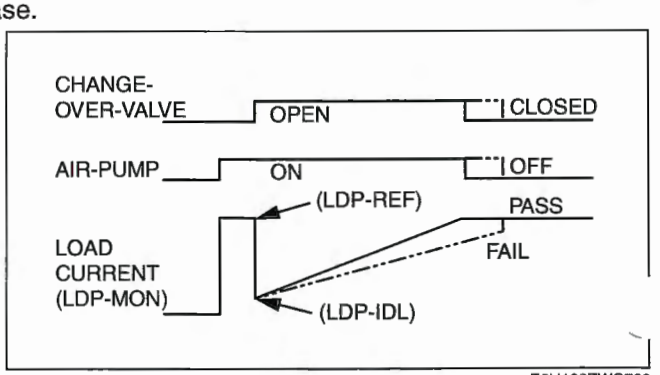

E6U103ZWC700

EVAP system malfunction judgment

- The PCM calculates the stored air pump load current value and sends the results to the WDS as DTCs:

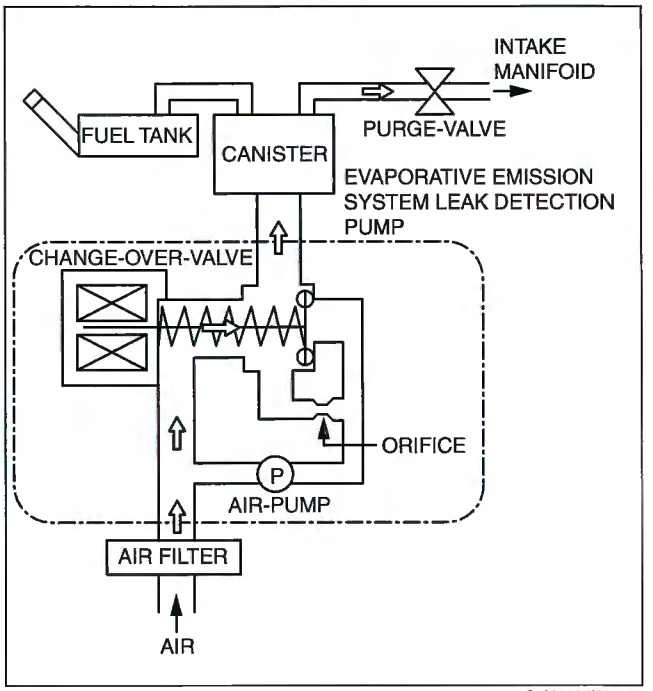

C5U116AW7002

DTC No.	Condition
P0442	EVAP control system leak detected (small leak)
P0446	Change over valve (COV) (EVAP system leak detection pump) stuck closed
P0455	EVAP control system leak detected (gross leak)
P0456	EVAP control system leak detected (very small leak)
P2401	EVAP system leak detection pump motor circuit low
P2402	EVAP system leak detection pump motor circuit high
P2404	EVAP system leak detection pump sensor circuit malfunction
P2405	EVAP system leak detection pump sensor circuit low input
P2407	EVAP system leak detection pump sensor circuit intermittent

Evaporative system test procedure

1. Select the EVAP system test from the Toolbox on the WDS display and follow the instructions.
2. Verify that all of the following PIDs are within the specifications at the pre-test confirmation screen.

Note

- To successfully perform this procedure, all PIDs must be within the following specifications before proceeding to the next step.
- The PCM will cancel the EVAP system test if the B+ PID value falls lower than **11.0 V** during the test.

Specification

PID	PID Range
BARO	72.2 kPa {543 mmHg, 21.3 inHg} or more
FLI	15—85%
IAT	5—45 °C {41—113 °F}
B+	11.0 V or more

3. Start the engine.
4. Drive the vehicle or let the engine idle more than **20 min**.
5. Turn the ignition switch off, then turn it to the ON position again (Key On Engine Off).
6. Press the tick icon to start the test.
   Verify that no DTCs are present after the completion of the test.

- If any test result is indicated with red, diagnose the problem using the following DTC troubleshooting procedure or component inspection procedure.
- If any DTCs are detected, diagnose the problem using the appropriate DTC troubleshooting procedure.

EVAP system leak inspection using leak tester

1. Perform the following **SST** (EVAP System Tester 134-01049) self-test:

Note

- If the tester does not work correctly during the self-test, refer to the tester operators manual for a more detailed self-test procedure.

(1) Verify that the control valve on the panel is in the HOLD position, then open the nitrogen bottle valve.
(2) Connect the vehicle interface hose (part of the **SST**) to the SELF TEST port located on the control panel. Hand tighten the fitting. (Do not overtighten.)
(3) Turn the control valve to the TEST position.
(4) The gauge should read **331—381 mm {13—15 in}** of water.
- If the gauge is not reading in this range, adjust the pressure by turning the black knob on the low pressure regulator at the nitrogen bottle.

(5) Turn the control valve to the HOLD position.
(6) Verify that the gauge holds pressure and that the flow meter reads no flow.
- If there is no drop in pressure and no flow, the tester passes the self-test.
- If the gauge leaks down, refer to the operators manual.

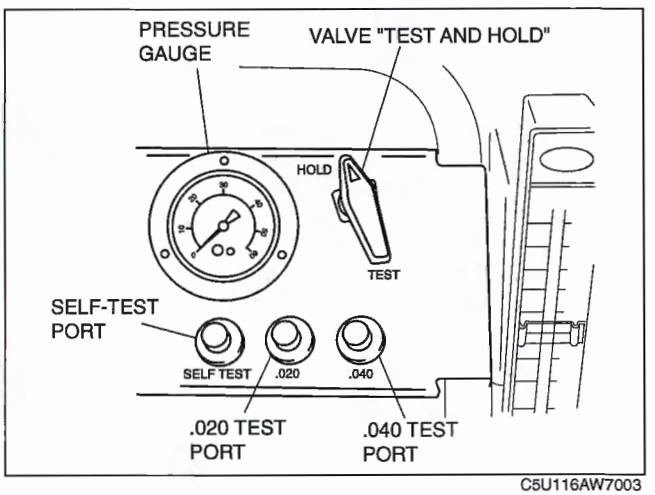

C5U116AW7003

2. Connect the **SST** to the vehicle.
(1) Verify that the control valve on the panel is in the HOLD position then open the nitrogen bottle valve.
(2) Remove the fuel-filler cap from the vehicle.
- If the fuel-filler cap is not a MAZDA part or equivalent, replace it.

(3) Connect the receiver assembly (**SST**: 134-01059) to the vehicle cap test hose assembly (part of **SST**) and the fuel-filler cap from the vehicle.
(4) Connect the cap adaptor (**SST**: 134-01058) to the vehicle cap test hose assembly (part of the **SST**) and to the fuel-filler neck.
(5) Connect the vehicle interface hose (part of the **SST**) to the center fitting of the vehicle cap test hose assembly (part of the **SST**).

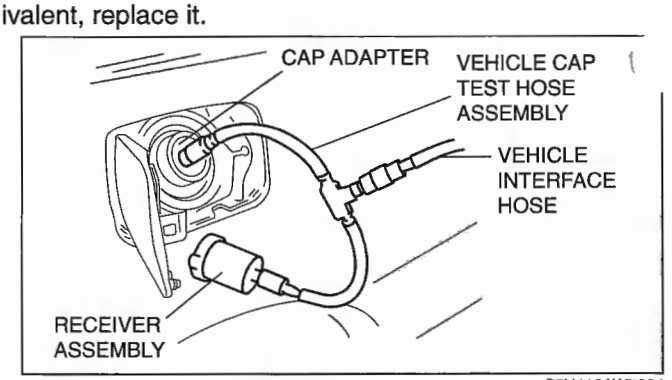

C5U116AW7004

3. Connect the WDS or equivalent to the DLC-2.
4. Turn the ignition switch to the ON position (Engine off).
5. Request the PCM on-board device control (Mode 08) using the WDS or equivalent to close the change-over valve (COV) in the EVAP system leak detection pump.

Note

- The COV is closed for **10 min** unless any of the following actions are performed:
  — The engine is started.
  — The ignition switch is turned off.

6. Make sure the control valve on the 134-01049 is in the HOLD position and that the valve on the cylinder of nitrogen gas is open.
7. Turn the control valve to the open position and let the system fill. You should note a drop in the gauge pressure along with the flow meter being pegged at maximum flow for several minutes depending on how full or empty the fuel tank is, and how long it takes to completely fill and pressurize the evaporative emissions system hoses.
8. If the gauge and the flow meter do not settle to a measurable level after **2—3 min**, then refer to the Mazda Workshop Manual to verify that the cut or vent valve is properly closed.

9. Verify the pressure gauge and flow meter reading to determine if there is an evaporative emissions leak:
   NO EVAPORATIVE LEAK:
   - The flow meter registers "zero flow" and the pressure gauge returns to the pre-set pressure of **356 mm {14 in}** of water (H2O).

   EVAPORATIVE LEAK:
   - The pressure does not return to the preset level of **356 mm {14 in}** of water (H2O) when measuring the flow. See "SETTING LEAK STANDARD FOR TESTING" (.020 to. 040 inch H2O) of the Evaporative Emissions Tester operators manual (134-01067).

   Note
   - Turn the control valve to the HOLD position then disconnect the **SST**.

01–03C SYMPTOM TROUBLESHOOTING [ENGINE CONTROL SYSTEM (AJ)]

SYMPTOM TROUBLESHOOTING WIRING DIAGRAM [AJ] 01–03C–2
CONTROL SYSTEM DEVICE AND CONTROL RELATIONSHIP CHART [AJ] 01–03C–3
FOREWORD [AJ] 01–03C–5
INTERMITTENT CONCERN TROUBLESHOOTING [AJ]..... 01–03C–5
Vibration Method 01–03C–5
Water Sprinkling Method 01–03C–7
SYMPTOM DIAGNOSTIC INDEX [AJ] 01–03C–8
SYMPTOM QUICK DIAGNOSIS CHART [AJ] 01–03C–10
NO.1 MELTING OF MAIN OR OTHER FUSES [AJ] 01–03C–14
NO.2 MIL ILLUMINATES [AJ]..... 01–03C–15
NO.3 WILL NOT CRANK [AJ]..... 01–03C–16
NO.4 HARD START/LONG CRANK/ERRATIC START/ERRATIC CRANK [AJ] 01–03C–18
NO.5 ENGINE STALLS-AFTER START/AT IDLE [AJ]..... 01–03C–20
NO.6 CRANKS NORMALLY BUT WILL NOT START [AJ]..... 01–03C–24
NO.7 SLOW RETURN TO IDLE [AJ] ... 01–03C–28
NO.8 ENGINE RUNS OUGH/ROLLING IDLE [AJ] 01–03C–29
NO.9 FAST IDLE/RUNS ON [AJ] 01–03C–32
NO.10 LOW IDLE/STALLS DURING DECELERATION [AJ]..... 01–03C–33
NO.11 ENGINE STALLS/QUITS, ENGINE RUNS ROUGH, MISSES, BUCK/JERK, HESITATION/STUMBLE, SURGES [AJ] 01–03C–34
NO.12 LACK/LOSS OF POWER-ACCELERATION/CRUISE [AJ] 01–03C–38
NO.13 KNOCKING/PINGING-ACCELERATION/CRUISE [AJ] 01–03C–41
NO.14 POOR FUEL ECONOMY [AJ]... 01–03C–42
NO.15 EMISSION COMPLIANCE [AJ] 01–03C–44
NO.16 HIGH OIL CONSUMPTION/LEAKAGE [AJ] 01–03C–46
NO.17 COOLING SYSTEM CONCERNS-OVERHEATING [AJ] 01–03C–46
NO.18 COOLING SYSTEM CONCERNS-RUNS COLD [AJ] 01–03C–48
NO.19 EXHAUST SMOKE [AJ]..... 01–03C–49
NO.20 FUEL ODOR (IN ENGINE COMPARTMENT) [AJ].....01–03C–51
NO.21 ENGINE NOISE [AJ].....01–03C–52
NO.22 VIBRATION CONCERNS (ENGINE) [AJ] 01–03C–52
NO.23 A/C DOES NOT WORK SUFFICIENTLY [AJ].....01–03C–53
NO.24 A/C ALWAYS ON/A/C COMPRESSOR RUNS CONTINUOUSLY [AJ] 01–03C–54
NO.25 A/C DOES NOT CUT OFF UNDER WIDE OPEN THROTTLE CONDITIONS [AJ].....01–03C–55
NO.26 EXHAUST SULPHUR SMELL [AJ].....01–03C–56
NO.27 FUEL REFILL CONCERNS [AJ].....01–03C–57
NO.28 FUEL FILLING SHUT OFF ISSUES [AJ].....01–03C–58
NO.29 SPARK PLUG CONDITION [AJ].....01–03C–59
ENGINE CONTROL SYSTEM OPERATION INSPECTION [AJ] 01–03C–61
Input Signal System Investigation Procedure.....01–03C–61
Main Relay Operation Inspection 01–03C–65
Intake Manifold Vacuum Inspection 01–03C–65
Electronic Throttle Control Inspection.....01–03C–66
Fuel Injector Operation Inspection 01–03C–67
Fuel Cut Control System Inspection.....01–03C–67
Fuel Pump Operation Inspection.....01–03C–67
Fuel Pump Control System Inspection.....01–03C–68
Ignition Timing Control Inspection.....01–03C–68
Spark Test.....01–03C–68
EGR Control System Inspection 01–03C–69
Purge Control System Inspection 01–03C–69
A/C Cut-off Control System Inspection.....01–03C–70
Variable Air Duct (VAD) Control System Operation Inspection 01–03C–70
Evaporative Emission (EVAP) System Leak Inspection 01–03C–70
Main Fan/Additional Fan Motor Operation Inspection.....01–03C–73
Variable Valve Timing Control System Operation Inspection 01–03C–74

SYMPTOM TROUBLESHOOTING WIRING DIAGRAM [AJ]

E6U010318881W73

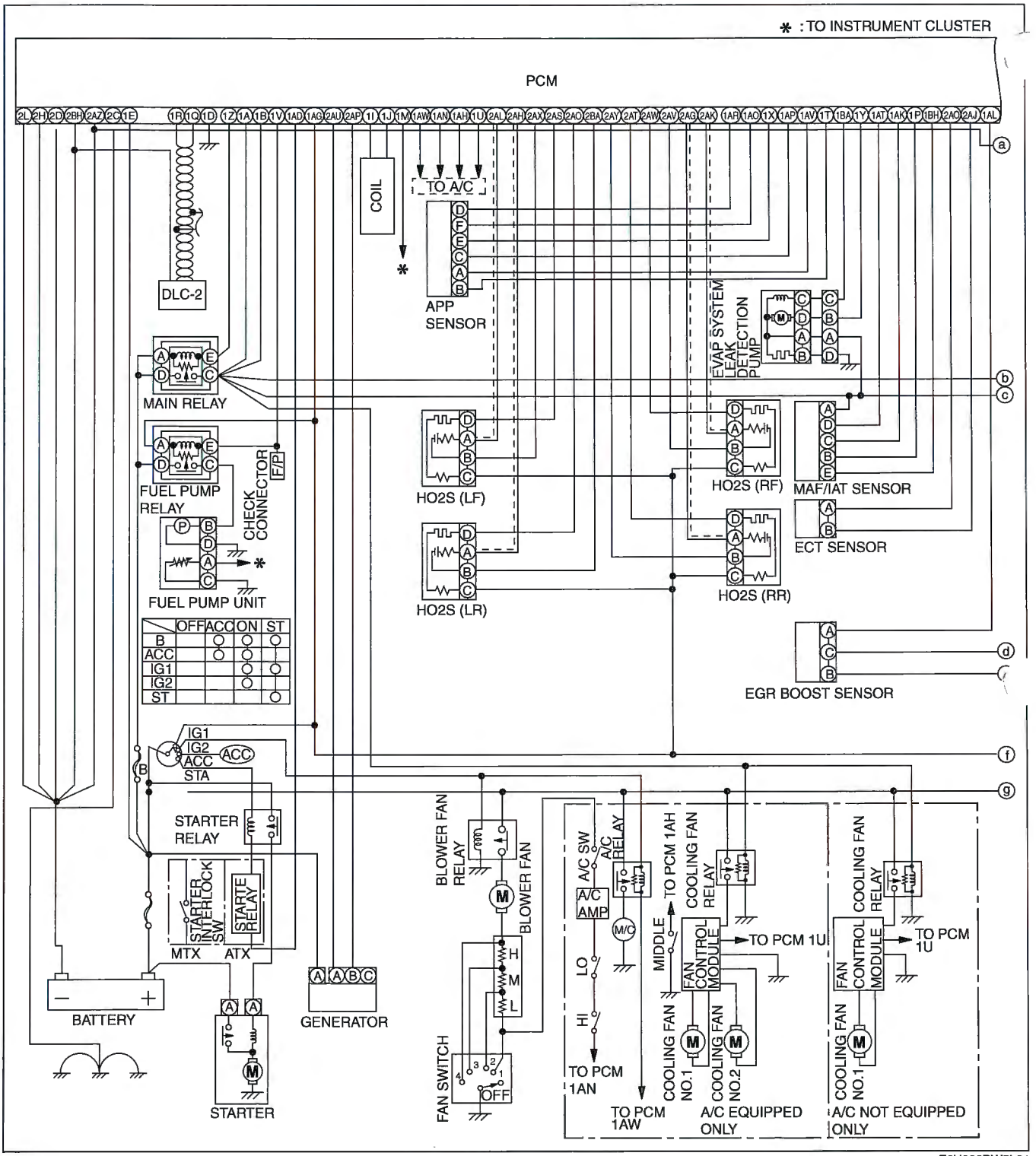

E6U000BW5L01

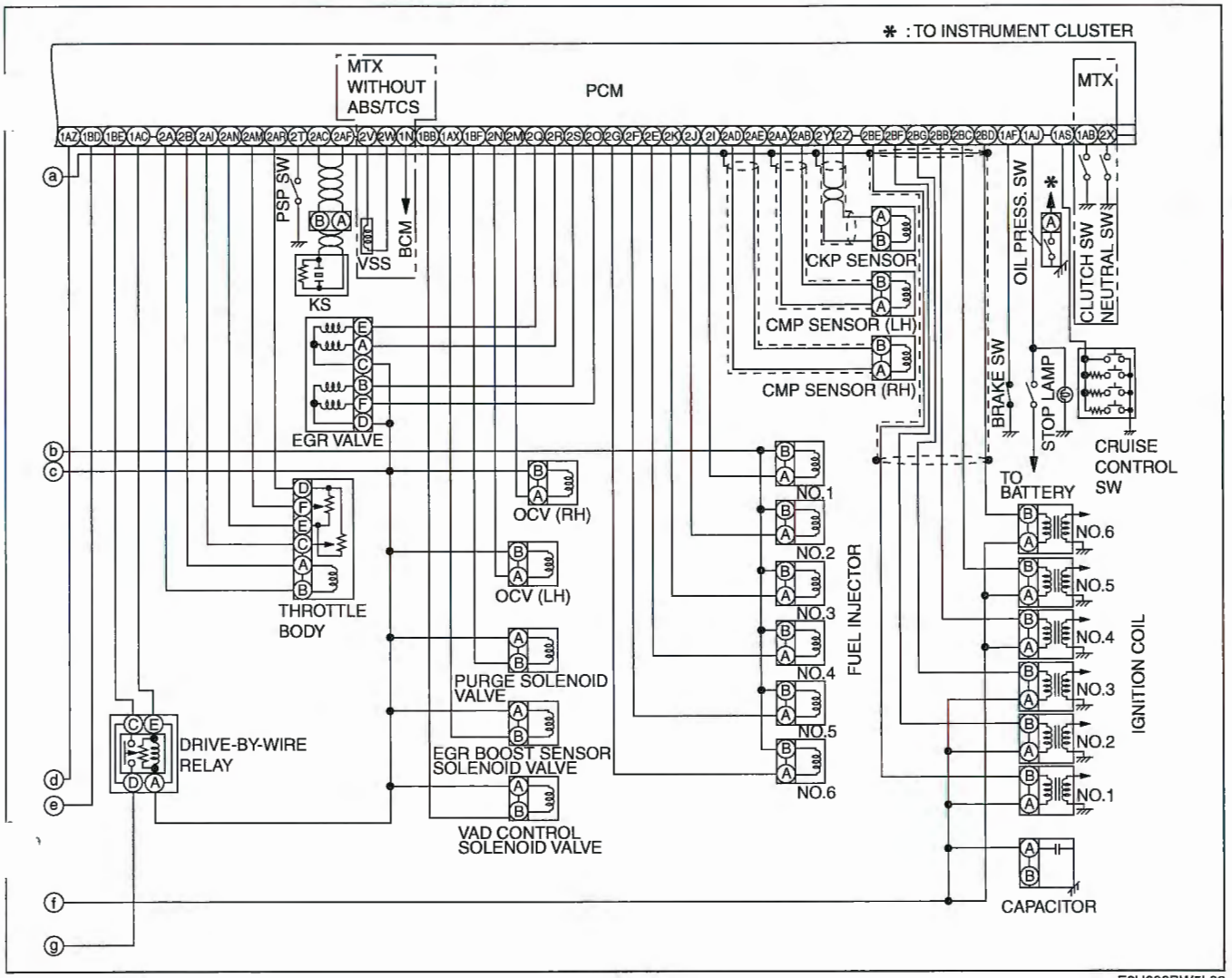

E6U000BW5L02

CONTROL SYSTEM DEVICE AND CONTROL RELATIONSHIP CHART [AJ]

E6U010318881W37

×: Applicable

Item	Electronic throttle control system (Idle air control function)	VAD control	Throttle actuator control	Variable valve timing control	Fuel pump control	Fuel injection control	ESA control	HO2S heater (RF, LF) control	HO2S heater (RR, LR) control	EGR control	Purge control	Electrical fan control	Generator control	Cruise control	A/C cut off control	Immobilizer system
Input device																
Battery voltage			×			×	×				×	×	×			
Brake switch			×			×								×		
Clutch switch	×					×	×									
utral switch	×					×	×									
R switch	×					×	×									
Cruise control switch														×		
PSP switch	×					×	×								×	

Item	Electronic throttle control system (Idle air control function)	VAD control	Throttle actuator control	Variable valve timing control	Fuel pump control	Fuel injection control	ESA control	HO2S heater (RF, LF) control	HO2S heater (RR, LR) control	EGR control	Purge control	Electrical fan control	Generator control	Cruise control	A/C cut off control	Immobilizer system
A/C switch, refrigerant pressure switch (high, low pressure)	×					×						×			×	
Refrigerant pressure switch (middle pressure)												×				
APP sensor			×											×		
TP sensor	×	×	×	×		×	×	×	×				×		×	
ECT sensor	×			×		×	×	×	×	×	×	×	×		×	
IAT sensor	×					×	×			×	×		×			
MAF sensor	×			×		×	×	×	×	×	×					
HO2S (RF, LF)						×										
HO2S (RR, LR)						×										
EGR boost sensor	×					×					×					
KS							×									
CMP sensor (RH, LH)				×		×	×									
CKP sensor	×	×	×	×	×	×	×	×	×	×	×		×		×	
VSS	×		×			×	×			×			×	×		
Generator terminal P	×												×			
ABS/TCS HU/CM	×		×			×	×									
Coil																×
Output device																
VAD control solenoid valve		×												×		
Throttle actuator	×		×											×		
OCV (RH, LH)				×												
Fuel injector						×										×
Ignition coil							×									×
HO2S heater (RF, LF)								×								
HO2S heater (RR, LR)									×							
EGR valve										×						
Purge solenoid valve											×					
Fan control module												×				
Generator terminal D (field coil)													×			
Generator warning light													×			
Cruise main indicator light														×		
Cruise set indicator light														×		
Fuel pump relay					×											
A/C relay															×	
Drive-by-wire relay			×													

FOREWORD [AJ]

E6U010318881W38

- When the customer reports a vehicle malfunction, check the malfunction indicator lamp (MIL) indication and diagnostic trouble code (DTC), then diagnose the malfunction according to the following flowchart:
  - — If a DTC exists, diagnose the applicable DTC inspection. (See 01–02C–13 DTC TABLE [AJ].)
  - — If no DTC exists and the MIL does not illuminate or flash, diagnose the applicable symptom troubleshooting. (See 01–03C–8 SYMPTOM DIAGNOSTIC INDEX [AJ].)

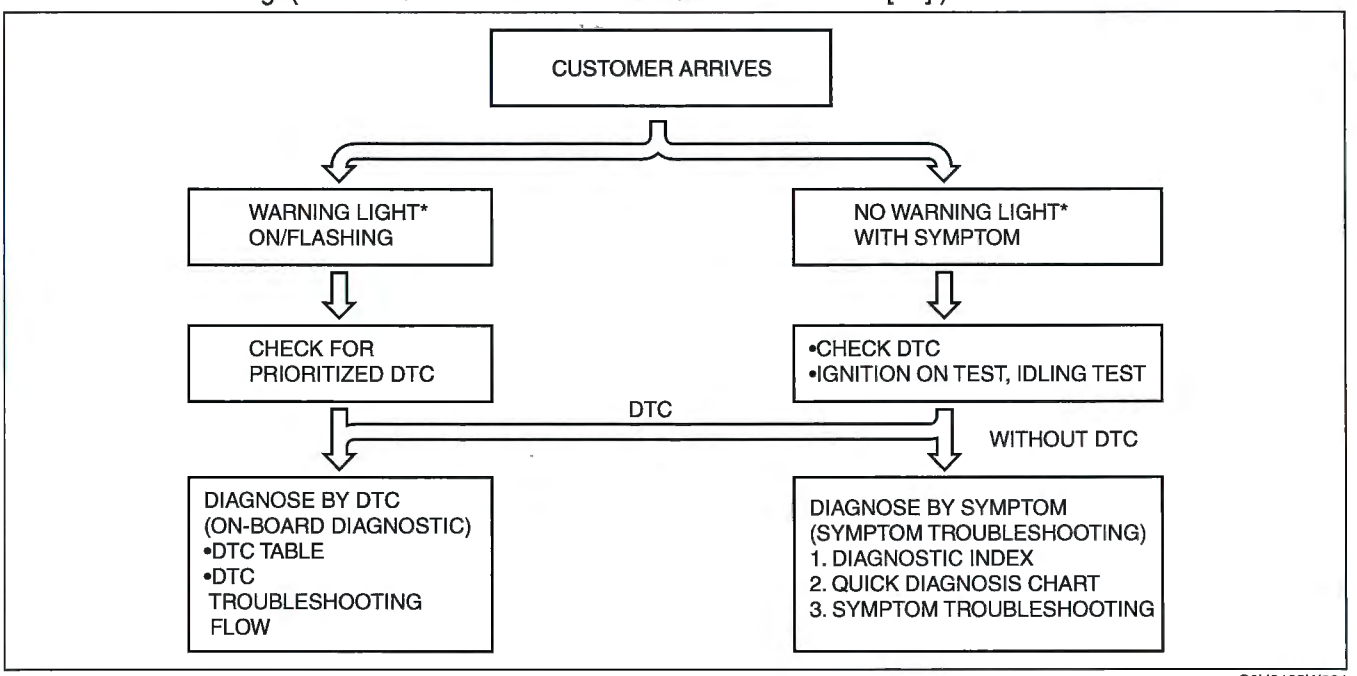

C6U0103W501

*: Malfunction Indicator Lamp (MIL), Generator Warning Light, Security Light

INTERMITTENT CONCERN TROUBLESHOOTING [AJ]

E6U010318881W39

Vibration Method

- If malfunction occurs or becomes worse while driving on a rough road or when engine is vibrating, perform the steps below.

Note

- There are several reasons vehicle or engine vibration could cause an electrical malfunction. Some of the things to check for are:
  - — Connectors not fully seated.
  - — Wire harnesses not having full play.
  - — Wires laying across brackets or moving parts.
  - — Wires routed too close to hot parts.
- An improperly routed, improperly clamped, or loose harness can cause wiring to become pinched between parts.
- The connector joints, points of vibration, and places such as where wire harnesses pass through the firewall, body panels are the major areas to be checked.

Inspection Method for Switch Connectors or Wires

1. Connect the WDS or equivalent to the DLC-2.
2. Turn ignition switch to ON position (Engine OFF).

Note

- If the engine starts and runs, perform the following steps at idle.

3. Access PIDs for the switch you are inspecting.
4. Turn switch on manually.

5. Shake each connector or wire harness a little vertically and horizontally while monitoring the PID.
   - If PID value is unstable, check for poor connection.

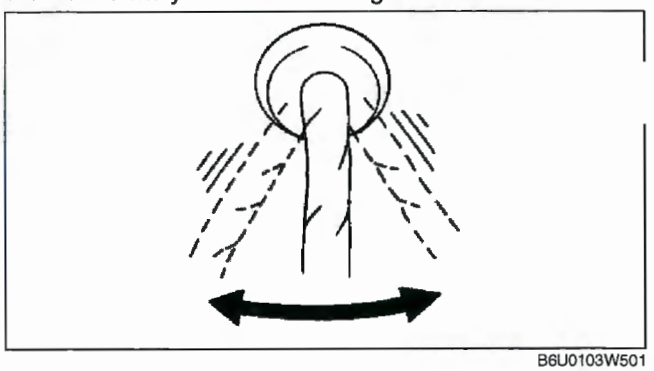
B6U0103W501

Inspection Method for Sensor Connectors or Wires

1. Connect the WDS or equivalent to the DLC-2.
2. Turn ignition switch to ON position (Engine OFF).

Note
- If engine starts and runs, perform the following steps at idle.

3. Access PIDs for the switch you are inspecting.
4. Shake each connector or wire harness a little vertically and horizontally while monitoring the PID.
   - If PID value is unstable, check for poor connection.

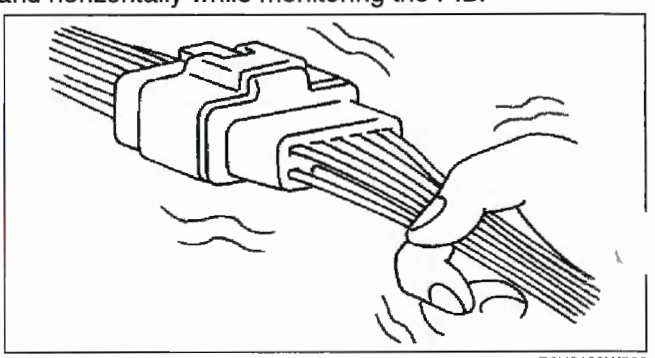
B6U0103W502

Inspection Method for Sensors

1. Connect the WDS or equivalent to the DLC-2.
2. Turn ignition switch to ON position (Engine OFF).

Note
- If engine starts and runs, perform the following steps at idle.

3. Access PIDs for the switch you are inspecting.
4. Vibrate the sensor slightly with your finger.
   - If PID value is unstable or malfunction occurs, check for poor connection or poorly mounted sensor, or both.

Inspection Method for Actuators or Relays

1. Connect the WDS or equivalent to the DLC-2.
2. Turn ignition switch to ON position (Engine OFF).

Note
- If engine starts and runs, perform the following steps at idle.

3. Prepare the output device control function for actuators or relays that you are inspecting.

4. Vibrate the actuator or relay with your finger for **3 s** after output device control function is activated.
   - If a variable click sound is heard, check for poor connection or poorly mounted actuator/ relay, or both.

Note
- Vibrating relays too strongly may result in open relays.

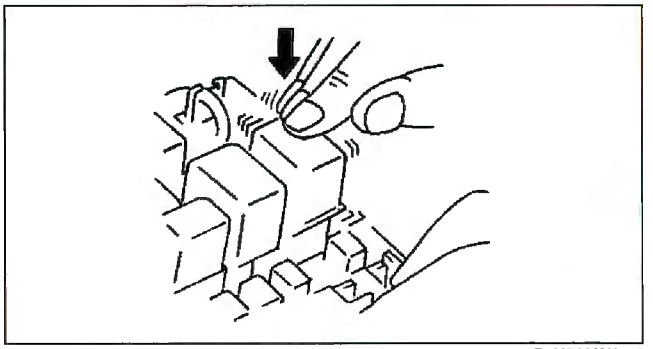

B6U0103W503

Water Sprinkling Method

If malfunction occurs only during high humidity or rainy/snowy weather, perform the following steps.

Caution
- **Indirectly change the temperature and humidity by spraying water onto the front of the radiator.**
- **If a vehicle is subject to water leakage, the leakage may damage the control module. When testing a vehicle with a water leakage problem, special caution must be used.**

1. Connect the WDS or equivalent to the DLC-2 if you are inspecting sensors or switches.
2. Turn ignition switch to ON position (Engine OFF).

Note
- If engine starts and runs, perform the following steps at idle.

3. Access PIDs for sensor or switch if you are inspecting sensors or switches.
4. If you are inspecting the switch, turn it on manually.
   Spray water onto the vehicle or run it through a car wash.
   - If the PID value is unstable or malfunction occurs, repair or replace part as necessary.

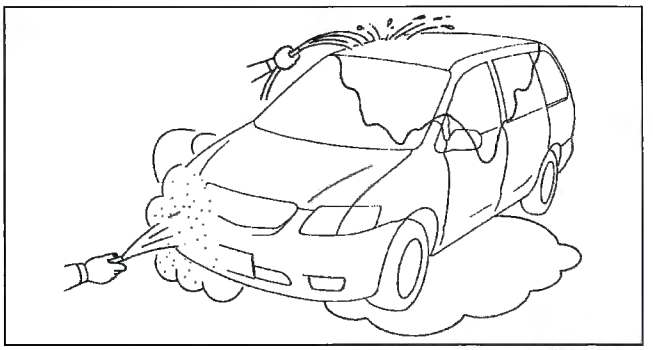

B6U0103W504

SYMPTOM DIAGNOSTIC INDEX [AJ]

E6U010318881W40

No.	TROUBLESHOOTING ITEM		DESCRIPTION	PAGE
1	Melting of main or other fuses		—	(See 01–03C–14 NO.1 MELTING OF MAIN OR OTHER FUSES [AJ].)
2	MIL illuminates		MIL is illuminated incorrectly.	(See 01–03C–15 NO.2 MIL ILLUMINATES [AJ].)
3	Will not crank		Starter does not work.	(See 01–03C–16 NO.3 WILL NOT CRANK [AJ].)
4	Hard start/long crank/erratic start/erratic crank		Starter cranks engine at normal speed but engine requires excessive cranking time before starting.	(See 01–03C–18 NO.4 HARD START/LONG CRANK/ERRATIC START/ ERRATIC CRANK [AJ].)
5	Engine stalls	After start/at idle	Engine stops unexpectedly at idle and/or after start.	(See 01–03C–20 NO.5 ENGINE STALLS-AFTER START/AT IDLE [AJ].)
6	Cranks normally but will not start		Starter cranks engine at normal speed but engine will not run.	(See 01–03C–24 NO.6 CRANKS NORMALLY BUT WILL NOT START [AJ].)
7	Slow return to idle		Engine takes more time than normal to return to idle speed.	(See 01–03C–28 NO.7 SLOW RETURN TO IDLE [AJ].)
8	Engine runs rough/rolling idle		Engine speed fluctuates between specified idle speed and lower speed and engine shakes excessively.	(See 01–03C–29 NO.8 ENGINE RUNS ROUGH/ ROLLING IDLE [AJ].)
9	Fast idle/runs on		Engine speed continues at fast idle after warm-up. Engine runs after ignition switch is turned to off.	(See 01–03C–32 NO.9 FAST IDLE/RUNS ON [AJ].)
10	Low idle/stalls during deceleration		Engine stops unexpectedly at beginning of deceleration or recovery from deceleration.	(See 01–03C–33 NO.10 LOW IDLE/STALLS DURING DECELERATIC [AJ].)
11	Engine stalls/quits	Acceleration/cruise	Engine stops unexpectedly at beginning of acceleration or during acceleration. Engine stops unexpectedly while cruising.	(See 01–03C–34 NO.11 ENGINE STALLS/QUITS, ENGINE RUNS ROUGH, MISSES, BUCK/JERK, HESITATION/STUMBLE, SURGES [AJ].)
	Engine runs rough	Acceleration/cruise	Engine speed fluctuates during acceleration or cruising.	
	Misses	Acceleration/cruise	Engine misses during acceleration or cruising.	
	Buck/jerk	Acceleration/cruise/ deceleration	Vehicle bucks/jerks during acceleration, cruising, or deceleration.	
	Hesitation/stumble	Acceleration	Momentary pause at beginning of acceleration, or during acceleration	
	Surges	Acceleration/cruise	Momentary minor irregularity in engine output	
12	Lack/loss of power	Acceleration/cruise	Performance poor under load (e.g. power down when climbing hills).	(See 01–03C–38 NO.12 LACK/LOSS OF POWER-ACCELERATION /CRUISE [AJ].)
13	Knocking/pinging	Acceleration/cruise	Sound is produced when air/fuel mixture is ignited by something other than spark plug (e.g. hot spot in combustion chamber).	(See 01–03C–41 NO.13 KNOCKING/ PINGING-ACCELERATIO N/CRUISE [AJ].)
14	Poor fuel economy		Fuel economy is unsatisfactory.	(See 01–03C–42 NO.14 POOR FUEL ECONOMY [AJ].)
15	Emissions compliance		Fails emissions test	(See 01–03C–44 NO.15 EMISSION COMPLIANCE [AJ].)
16	High oil consumption/leakage		Oil consumption is excessive.	(See 01–03C–46 NO.16 HIGH OIL CONSUMPTION/ LEAKAGE [AJ].)

No.	TROUBLESHOOTING ITEM		DESCRIPTION	PAGE
17	Cooling system concerns	Overheating	Engine runs at higher than normal temperature/overheats.	(See 01–03C–46 NO.17 COOLING SYSTEM CONCERNS-OVERHEATING [AJ].)
18	Cooling system concerns	Runs cold	Engine does not reach normal operating temperature.	(See 01–03C–48 NO.18 COOLING SYSTEM CONCERNS-RUNS COLD [AJ].)
19	Exhaust smoke		Blue, black, or white smoke from exhaust system	(See 01–03C–49 NO.19 EXHAUST SMOKE [AJ].)
20	Fuel odor (in engine compartment)		Gasoline fuel smell or visible leakage	(See 01–03C–51 NO.20 FUEL ODOR (IN ENGINE COMPARTMENT) [AJ].)
21	Engine noise		Engine noise from under hood	(See 01–03C–52 NO.21 ENGINE NOISE [AJ].)
22	Vibration concerns (engine)		Vibration from under hood or driveline	(See 01–03C–52 NO.22 VIBRATION CONCERNS (ENGINE) [AJ].
23	A/C does not work sufficiently		A/C compressor magnetic clutch does not engage when A/C is turned on.	(See 01–03C–53 NO.23 A/C DOES NOT WORK SUFFICIENTLY [AJ].)
24	A/C always on or A/C compressor runs continuously.		A/C compressor magnetic clutch does not disengage.	(See 01–03C–54 NO.24 A/C ALWAYS ON/A/C COMPRESSOR RUNS CONTINUOUSLY [AJ].)
25	A/C does not cut off under wide open throttle conditions.		A/C compressor magnetic clutch does not disengage under wide open throttle.	(See 01–03C–55 NO.25 A/C DOES NOT CUT OFF UNDER WIDE OPEN THROTTLE CONDITIONS [AJ].)
26	Exhaust sulphur smell		Rotten egg smell (sulphur) from exhaust	(See 01–03C–56 NO.26 EXHAUST SULPHUR SMELL [AJ].)
27	Fuel refill concerns		Fuel tank does not fill smoothly.	(See 01–03C–57 NO.27 FUEL REFILL CONCERNS [AJ].)
28	Fuel filling shut off issues		Fuel does not shut off properly.	(See 01–03C–58 NO.28 FUEL FILLING SHUT OFF ISSUES [AJ].)
29	Spark plug condition		Incorrect spark plug condition	(See 01–03C–59 NO.29 SPARK PLUG CONDITION [AJ].)
30	ATX concerns	Upshift/downshift/ engagement	ATX concerns not related to engine performance	(See 05–03B–4 SYMPTOM TROUBLESHOOTING ITEM TABLE [AW6A-EL].)

SYMPTOM QUICK DIAGNOSIS CHART [AJ]

E6U010318881W41

X: Applicable

	Troubleshooting item / Possible factor		Starter motor malfunction (Mechanical or electrical)	Starter circuit including ignition switch is open	Improper engine oil level	Low or dead battery	Charging system malfunction	Improper engine compression	Improper valve timing	Hydrolocked engine	Improper engine oil viscosity	Improper dipstick	Base engine malfunction	Flywheel or drive plate is seized.	Improper tension or damaged drive belts	Improper engine coolant level	Water and anti-freeze mixture are improper.	Cooling fan system malfunction	Engine or transaxle mounts improperly installed.	Cooling fan seat improper.	Accelerator position sensor play misadjustment
1	Melting of main or other fuses																				
2	MIL illuminates																				
3	Will not crank		x	x		x	x			x				x							
4	Hard to start/long crank/erratic start/erratic crank																				
5	Engine stalls.	After start/at idle						x	x												
6	Cranks normally but will not start							x	x												
7	Slow return to idle																	x			
8	Engine runs rough/rolling idle							x	x												
9	Fast idle/runs on																				x
10	Low idle/stalls during deceleration																				x
11	Engine stalls/quits	Acceleration/cruise						x	x												x
	Engine runs rough	Acceleration/cruise						x	x												x
	Misses	Acceleration/cruise						x	x												x
	Buck/jerk	Acceleration/cruise/deceleration						x	x												x
	Hesitation/stumble	Acceleration						x	x												x
	Surges	Acceleration/cruise						x	x												x
12	Lack/loss of power	Acceleration/cruise						x	x												
13	Knocking/pinging	Acceleration/cruise						x													
14	Poor fuel economy							x	x							x		x			
15	Emissions compliance							x	x				x					x			
16	High oil consumption/leakage										x	x	x								
17	Cooling system concerns	Overheating													x	x	x	x			
18	Cooling system concerns	Runs cold																x			
19	Exhaust smoke							x					x								
20	Fuel odor (in engine compartment)																				
21	Engine noise				x								x		x						
22	Vibration concerns (engine)														x				x	x	
23	A/C does not work sufficiently.																				
24	A/C always on or A/C compressor runs continuously																				
25	A/C does not cut off under wide open throttle conditions																				x
26	Exhaust sulfur smell																				
27	Fuel refill concerns																				
28	Fuel filling shut off issues																				
29	Spark plug condition							x													
30	ATX concerns	Upshift/downshift/engagement	(See SYMPTOM TROUBLESHOOTING [FS5A-EL], [AW6A-EL])																		

E6U103BW5L00

X: Applicable

	Troubleshooting item / Possible factor		Cruise control system operation improperly	Fuel quality	Engine overheating	Air cleaner element clogging or restriction	Air leakage from intake-air system (Loose tubes, cracks, gaskets breakage)	Electronic throttle control system improper operation	Throttle body malfunction	Variable valve timing control system	VAD malfunction	Vacuum leakage (Vacuum hose damage, misrouting)	Ignition coil malfunction (e.g. open, short circuit or cracks)	Spark plug malfunction	CKP sensor damaged (e.g. open or short circuits).	Crankshaft pulley damaged	Fuel pump malfunction (Mechanically or electrically)	Pressure regulator malfunction	Fuel hoses restriction or clogging	Injectors malfunction (Leakage or clogging, inoperative)	Fuel leakage from fuel system (including insulator, injector O-ring)
1	Melting of main or other fuses																					
2	MIL illuminates														x							
3	Will not crank																					
4	Hard to start/long crank/erratic start/erratic crank			x		x	x	x				x	x	x	x	x	x	x	x			
5	Engine stalls.	After start/at idle		x	x	x	x	x		x		x	x	x	x	x	x	x	x	x	x	x
6	Cranks normally but will not start			x	x	x	x	x				x	x	x	x	x	x	x	x	x	x	x
7	Slow return to idle								x													
8	Engine runs rough/rolling idle			x	x	x	x	x		x		x	x	x	x	x	x	x	x	x		
9	Fast idle/runs on		x				x	x	x													
10	Low idle/stalls during deceleration						x	x				x										
11	Engine stalls/quits	Acceleration/cruise		x	x	x	x	x	x			x	x	x	x	x	x	x	x	x		
	Engine runs rough	Acceleration/cruise		x	x	x	x	x	x			x	x	x	x	x	x	x	x	x		
	Misses	Acceleration/cruise		x	x	x	x	x	x			x	x	x	x	x	x	x	x	x		
	Buck/jerk	Acceleration/cruise/deceleration		x	x	x	x	x	x			x	x	x	x	x	x	x	x	x		
	Hesitation/stumble	Acceleration		x	x	x	x	x	x			x	x	x	x	x	x	x	x	x		
	Surges	Acceleration/cruise		x	x	x	x	x	x			x	x	x	x	x	x	x	x	x		
12	Lack/loss of power	Acceleration/cruise		x	x	x	x	x	x	x		x	x	x	x	x	x	x	x	x		
13	Knocking/pinging	Acceleration/cruise			x													x				
14	Poor fuel economy			x		x		x		x			x	x			x	x	x			
15	Emissions compliance					x	x		x			x		x			x	x	x			
16	High oil consumption/leakage																					
17	Cooling system concerns	Overheating																				
18	Cooling system concerns	Runs cold																				
19	Exhaust smoke					x							x	x			x	x	x	x		
20	Fuel odor (in engine compartment)																	x			x	
21	Engine noise						x				x	x										
22	Vibration concerns (engine)																					
23	A/C does not work sufficiently.																					
24	A/C always on or A/C compressor runs continuously																					
25	A/C does not cut off under wide open throttle conditions																					
26	Exhaust sulfur smell			x								x					x	x				
27	Fuel refill concerns																					
28	Fuel filling shut off issues																					
29	Spark plug condition			x		x								x			x	x	x	x	x	x
30	ATX concerns	Upshift/downshift/engagement	(See SYMPTOM TROUBLESHOOTING [FS5A-EL], [AW6A-EL])																			

E6U103BW5L03

X: Applicable

	Troubleshooting item / Possible factor		Injectors malfunction (Leakage or clogging, inoperative)	Fuel leakage from fuel system (including insulator, injector O-ring)	Fuel filters restriction or clogging	CMP sensor damaged (e.g. open or short circuit).	Camshaft is damaged.	Improper air/fuel mixture ratio control	Exhaust system restriction or clogging	Catalytic converter malfunction	EGR system malfunction	EVAP control system malfunction	PCV valve malfunction	V-reference supply circuit malfunction	Main relay malfunction (Mechanically or electrically)	IAT sensor malfunction	ECT sensor malfunction	Neutral/clutch switch or related circuit malfunction (MTX)	TR switch misadjustment (ATX)	P/N position switch in TR switch open. (ATX)	Starter interlock switch misadjustment (MTX)	Brake switch and related circuit malfunction	MAF sensor and related circuit malfunction
1	Melting of main or other fuses																						
2	MIL illuminates					x				x	x	x											x
3	Will not crank																		x	x	x		
4	Hard to start/long crank/erratic start/erratic crank				x	x		x	x			x	x										x
5	Engine stalls.	After start/at idle	x	x				x	x		x	x	x	x									
6	Cranks normally but will not start		x	x		x		x	x		x	x	x	x	x								
7	Slow return to idle																x						
8	Engine runs rough/rolling idle		x		x	x	x	x	x		x	x	x										
9	Fast idle/runs on																x						
10	Low idle/stalls during deceleration							x				x						x		x		x	x
11	Engine stalls/quits	Acceleration/cruise	x		x	x	x	x	x		x	x	x		x								x
	Engine uns rough	Acceleration/cruise	x		x	x	x	x	x		x	x	x		x								x
	Misses	Acceleration/cruise	x		x	x	x	x	x		x	x	x		x								x
	Buck/jerk	Acceleration/cruise/deceleration	x		x	x	x	x	x		x	x	x		x								x
	Hesitation/stumble	Acceleration	x		x	x	x	x	x		x	x	x		x								x
	Surges	Acceleration/cruise	x		x	x	x	x	x		x	x	x		x								x
12	Lack/loss of power	Acceleration/cruise	x		x	x	x		x		x	x	x										x
13	Knocking/pinging	Acceleration/cruise				x	x									x	x						x
14	Poor fuel economy				x	x	x		x				x										
15	Emissions compliance				x	x	x	x	x	x	x	x	x										
16	High oil consumption/leakage												x										
17	Cooling system concerns	Overheating																					
18	Cooling system concerns	Runs cold																					
19	Exhaust smoke		x										x										
20	Fuel odor (in engine compartment)			x								x											
21	Engine noise																						
22	Vibration concerns (engine)																						
23	A/C does not work sufficiently.																						
24	A/C always on or A/C compressor runs continuously																						
25	A/C does not cut off under wide open throttle conditions																						
26	Exhaust sulfur smell											x											
27	Fuel refill concerns											x											
28	Fuel filling shut off issues											x											
29	Spark plug condition		x	x				x									x						x
30	ATX concerns	Upshift/downshift/engagement	(See SYMPTOM TROUBLESHOOTING [FS5A-EL], [AW6A-EL])																				

E6U103BW5L04

X: Applicable

	Troubleshooting item / Possible factor		TP sensor and related circuit malfunction	Accelerator position sensor related circuit malfunction	Knock sensor and relayed circuit malfunction	P/S pressure switch and related circuit malfunction	Improper refrigerant charging amount	A/C relay (A/C control signal) circuit malfunction	Cooling system malfunction (Radiator, hoses, overflow system, thermostat, etc.)	Improper load signal input	Clutch slippage (MTX)	ATX related parts malfunction (ATX)	VSS and related circuit malfunction	Immobilizer system (PATS) operating	Immobilizer system (PATS) malfunction	Improper ATF level (ATX)	Brake dragging	Loosen parts	Improper balance of wheels and tires	Drive line malfunction	Suspension malfunction
1	Melting of main or other fuses																				
2	MIL illuminates		x		x	x															
3	Will not crank													x	x						
4	Hard to start/long crank/erratic start/erratic crank																				
5	Engine stalls.	After start/at idle	x	x			x	x						x	x						
6	Cranks normally but will not start		x	x										x	x						
7	Slow return to idle								x												
8	Engine runs rough/rolling idle					x	x	x		x											
9	Fast idle/runs on									x											
10	Low idle/stalls during deceleration		x	x																	
11	Engine stalls/quits	Acceleration/cruise	x				x	x			x	x	x								
	Engine runs rough	Acceleration/cruise	x				x	x			x	x	x								
	Misses	Acceleration/cruise	x				x	x			x	x	x								
	Buck/jerk	Acceleration/cruise/deceleration	x				x	x			x	x	x								
	Hesitation/stumble	Acceleration	x				x	x			x	x	x								
	Surges	Acceleration/cruise	x				x	x			x	x	x								
12	Lack/loss of power	Acceleration/cruise	x				x	x			x	x	x				x				
13	Knocking/pinging	Acceleration/cruise			x				x												
14	Poor fuel economy								x		x					x	x				
15	Emissions compliance								x												
16	High oil consumption/leakage																				
17	Cooling system concerns	Overheating					x	x	x												
18	Cooling system concerns	Runs cold							x												
19	Exhaust smoke								x												
20	Fuel odor (in engine compartment)																				
21	Engine noise																	x			
22	Vibration concerns (engine)																	x	x	x	x
23	A/C does not work sufficiently.						x	x													
24	A/C always on or A/C compressor runs continuously							x													
25	A/C does not cut off under wide open throttle conditions			x																	
26	Exhaust sulfur smell																				
27	Fuel refill concerns																				
28	Fuel filling shut off issues																				
29	Spark plug condition																				
30	ATX concerns	Upshift/downshift/engagement	(See SYMPTOM TROUBLESHOOTING [FS5A-EL], [AW6A-EL])																		

E6U103BW5L05

NO.1 MELTING OF MAIN OR OTHER FUSES [AJ]

E6U010318881W42

1	Melting of main or other fuses

[TROUBLESHOOTING HINTS]
Inspect condition of fuse.

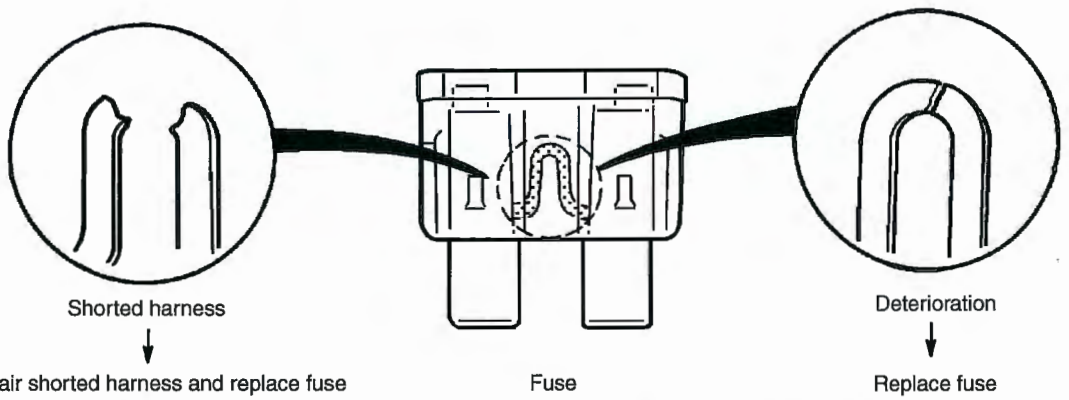

Damaged fuse	Related wiring harness
MAIN	**MAIN fuse** • BTN fuse • IG KEY2 fuse • IG1 fuse • FAN1 fuse • FAN2 fuse • Generator
BTN	**BTN fuse** • ROOM fuse
ROOM	**ROOM fuse** • DLC-2
IG KEY2	**IG KEY2 fuse** • Ignition switch • Starter relay
IG KEY1	**IG KEY1 fuse** • Ignition switch — ENGINE fuse — Starter relay
ENGINE	ENGINE fuse • Fuel pump relay • Ignition coils • Capacitor
FUEL PUMP	**FUEL PUMP fuse** • Fuel pump relay • Main relay
IG1	**IG1 fuse** • IG1 fuse
FAN1	**FAN1 fuse** • Cooling fan relay
FAN2	**FAN2 fuse** • Cooling fan relay
ETC	**ETC fuse** • Drive-by-wire relay
INJ	**INJ fuse** • Drive-by-wire relay • PCM • Fuel injectors

ENG BAR	**ENG BAR fuse** • Purge solenoid valve • VAD control solenoid valve • EGR boost sensor solenoid valve • MAF/IAT sensor • EGR valve • OCV (RH) • OCV (LH) • EVAP system leak detection pump
ENG BB	**ENG BB fuse** • Cooling fan relay
If malfunction remains, refer to related Service Bulletins and/or On-line Repair Information and perform repair or diagnosis. • If vehicle is repaired, troubleshooting completed. • If vehicle is not repaired or additional diagnostic information is not available, reprogram PCM if later calibration is available. Retest.	

NO.2 MIL ILLUMINATES [AJ]

E6U010318881W43

2	**MIL illuminates**
DESCRIPTION	• MIL illuminates.
POSSIBLE CAUSE	• PCM illuminates MIL for emission-related concern (DTCs are stored in PCM) • Short to GND circuit between MIL (located on instrument cluster) and PCM **Note** • If MIL blinks at steady rate, misfire condition could possibly exist.

Diagnostic procedure

STEP	INSPECTION		ACTION
1	• Connect WDS or equivalent to DLC-2. • Turn ignition switch to ON position. • Retrieve any DTCs. • Are there any DTCs displayed?	Yes	**DTC is displayed:** • Go to appropriate DTC test.
		No	**No DTC is displayed:** • Inspect for short to GND circuit between instrument cluster and PCM terminal 2AE. • Inspect instrument cluster operation (See 09–22–5 INSTRUMENT CLUSTER INSPECTION.)
2	• Verify test results. — If normal, return to diagnostic index to service any additional symptoms. — If malfunction remains, inspect related Service Bulletins and/or On-line Repair Information and perform repair or diagnosis. • If vehicle is repaired, troubleshooting completed. • If vehicle is not repaired or additional diagnostic information is not available, reprogram PCM if later calibration is available. Retest.		

NO.3 WILL NOT CRANK [AJ]

E6U010318881W44

3	Will not crank
DESCRIPTION	• Starter does not work.
POSSIBLE CAUSE	• Open starter circuit between ignition switch and starter • TR switch malfunction (ATX) • TR switch misadjustment (ATX) • Low or dead battery • Charging system malfunction • Starter interlock switch malfunction (MTX) • Starter malfunction • Seized/hydro locked engine, flywheel or drive plate • Immobilizer system (PATS) and / or circuit malfunction

Diagnostic procedure

STEP	INSPECTION		ACTION
1	• Connect WDS or equivalent to DLC-2. • Do following conditions appear? — Engine is not completely started. — DTC B1681 is displayed.	Yes	**Both conditions appear:** Go to Step 4.
		No	**Either or other condition appears:** Go to the next step.
2	• Is coil connector securely connected to coil?	Yes	Go to the next step.
		No	Connect coil connector securely. Return to step 1.
3	• Does security light illuminate?	Yes	Go to the next step.
		No	Inspect instrument cluster and wiring harness. (See 09–22–5 INSTRUMENT CLUSTER INSPECTION.)
4	• Connect WDS or equivalent to DLC-2 and retrieve DTC. **DTC** **B1213, B1342, B1600, B1601, B1602, B1681, B2103, B2431**	Yes	Go to appropriate DTC test.
		No	Go to the next step.
5	• Is there continuity between PCM GND terminals 2H, 2L, 2D, 2BH, 2AZ and GND?	Yes	Go to the next step.
		No	Repair or replace wiring harness.
6	• Measure voltage between PCM GND terminals 2H, 2L, 2D, 2BH, 2AZ and coil terminals C • Is voltage **below 1.0 V**?	Yes	Go to the next step.
		No	Repair or replace wiring harness.
7	• Turn ignition switch to ON position. • Measure voltage PCM terminal 2AP and 1A. • Is voltage **B+**?	Yes	Go to the next step.
		No	Repair or replace wiring harness.
8	• Disconnect coil connector. • Turn ignition switch to ON position. • Is there battery voltage at coil connector terminal D?	Yes	Go to the next step.
		No	Repair or replace wiring harness between coil connector terminal D and fuse panel.
9	• Inspect for following wiring harnesses and connectors: — Between coil terminal A and PCM terminal 1J — Between coil terminal B and PCM terminal 1I • Is there any malfunction?	Yes	Repair or replace wiring harness.
		No	Go to the next step.
10	• Is there continuity between PCM terminal 1AD and starter relay with clutch pedal depressed (MTX), P or N position (ATX)?	Yes	Go to the next step.
		No	Repair or replace wiring harness. For ATX inspect starter cut relay and related wiring harness
11	• Verify the following: — Battery connection — Battery condition — Transaxle is in Park or Neutral. (ATX) — Clutch is fully depressed. (MTX) — Fuses • Are all items normal?	Yes	Go to the next step.
		No	Service as necessary. Repeat Step 11.
12	• Is clicking sound heard from starter when ignition switch is turned to START position?	Yes	Go to the next step.
		No	Go to Step 14.

STEP	INSPECTION		ACTION
13	• Inspect starting system. (See 01–19A–4 STARTER INSPECTION [L3, AJ].) (See 01–19A–9 STARTER INTERLOCK SWITCH INSPECTION (MTX).) • Is starting system normal?	Yes	Inspect for seized/hydrologic engine, flywheel or drive plate.
		No	Repair or replace components as required.
14	• Do any other electrical accessories work?	Yes	Go to the next step.
		No	Inspect charging system. (See 01–17A–2 BATTERY INSPECTION [L3, AJ].) (See 01–17A–5 GENERATOR INSPECTION [L3, AJ].)
15	**Note** • The following test should be performed on ATX only. For MTX, go to the next step. • Inspect adjustment of TR switch. (See 05–17B–13 TRANSAXLE RANGE (TR) SWITCH INSPECTION [AW6A-EL].) • Is TR switch adjusted properly?	Yes	Go to the next step.
		No	Perform N position learning. (See 05–17B–28 Neutral Position Learning.) If problem remains replace TR switch. (See 05–17B–25 TCM REMOVAL/ INSTALLATION [AW6A-EL].)
16	• Connect WDS or equivalent to DLC-2. • Turn ignition switch to ON position. • Retrieve any DTCs. • Are there any DTCs displayed?	Yes	**DTC is displayed:** • Go to appropriated DTC test. **Communication error message is displayed:** • Inspect for following — Open circuit between main relay terminal C and PCM terminal 2AP or 1A — Open main relay GND circuit — Main relay is stuck open. — Open or poor GND circuit (PCM terminal 2H, 2L, 2D, 2BH, 2AZ) — Poor connection of vehicle body GND
		No	**No DTC displayed:** • Inspect START circuit in ignition switch. (See 09–21–5 IGNITION SWITCH INSPECTION [WITH ADVANCED KEYLESS SYSTEM].) (See 09–21–3 IGNITION SWITCH INSPECTION [WITHOUT ADVANCED KEYLESS SYSTEM].) • Inspect for open circuit between ignition switch and starter.
17	• Verify test results. — If normal, return to diagnostic index to service any additional symptoms. — If malfunction remains, inspect related Service Bulletins and/or On-line Repair Information and perform repair or diagnosis. • If vehicle is repaired, troubleshooting completed. • If vehicle is not repaired or additional diagnostic information is not available, reprogram PCM later calibration is available. Retest.		

NO.4 HARD START/LONG CRANK/ERRATIC START/ERRATIC CRANK [AJ]

E6U010318881W45

4	Hard start/long crank/erratic start/erratic crank
DESCRIPTION	• Starter cranks engine at normal speed but engine requires excessive cranking time before start. • Battery is in normal condition.
POSSIBLE CAUSE	• Erratic signal to ignition coil • Vacuum leakage • Poor fuel quality • Starting system malfunction • Spark plug malfunction • Air leakage from intake-air system • Erratic signal from CKP sensor • Erratic signal from CMP sensor • Improper air/fuel mixture ratio control • Air cleaner restriction • Improper operation of electronic throttle control system • PCV valve malfunction • Inadequate fuel pressure • Purge solenoid valve malfunction • MAF sensor contamination • Restriction in exhaust system • EGR valve malfunction • Pressure regulator malfunction **Warning** • **The following troubleshooting flow chart contains the fuel system diagnosis and repair procedures. Read the following warnings before performing the fuel system services:** **— Fuel vapor is hazardous. It can easily ignite, causing serious injury and damage. Always keep sparks and flames away from fuel.** **— Fuel line spills and leakage are dangerous. Fuel can ignite and cause serious injuries or death and damage. Fuel can also irritate skin and eyes. To prevent this, always complete "BEFORE REPAIR PROCEDURE" and "AFTER REPAIR PROCEDURE" described in this manual.** **(See 01–14A–6 BEFORE REPAIR PROCEDURE [L3, AJ].)** **(See 01–14A–6 AFTER REPAIR PROCEDURE [L3, AJ].)** **Caution** • **Disconnecting/connecting quick release connector without cleaning it may possibly cause damage to fuel pipe and quick release connector. Always clean quick release connector joint area before disconnecting/connecting, and make sure that it is free of foreign material.**

Diagnostic procedure

STEP	INSPECTION		ACTION
1	• Inspect for the following: — Vacuum leakage — Proper fuel quality (e.g. proper octane, contamination, winter/summer blend) — Loose bands on intake-air system — Cracks on intake-air system parts — Air cleaner restriction • Are all items normal?	Yes	Go to the next step.
		No	Service as necessary. Repeat Step 1.
2	• Connect WDS or equivalent to DLC–2. • Turn ignition switch to ON position. • Retrieve any DTCs. • Are there any DTCs displayed?	Yes	**DTC is displayed:** • Go to appropriate DTC test.
		No	**No DTC is displayed:** • Go to the next step.
3	• Is engine overheating?	Yes	Go to flowchart "No.17 Cooling system concerns—Overheating".
		No	Go to the next step.
4	• Inspect ignition coil related harnesses condition (intermittent open or short circuit) for all cylinders. • Are all harnesses condition normal?	Yes	Go to the next step.
		No	Repair suspected wiring harness.

STEP	INSPECTION		ACTION
5	• Inspect spark plug conditions. • Is spark plug wet, covered with carbon or grayish white?	Yes	**Spark plug is wet or covered with carbon:** • Inspect for fuel leakage from fuel injector. **Spark plug is grayish white:** • Inspect for clogged fuel injector.
		No	Install spark plugs on original cylinders. Go to the next step.
6	• Visually inspect CKP sensor and teeth of crankshaft pulley. • Are CKP sensor and teeth of crankshaft pulley normal?	Yes	Go to the next step.
		No	Replace malfunctioning part.
7	• Remove and shake PCV valve. • Does PCV valve rattle?	Yes	Go to the next step.
		No	Replace PCV valve.
8	• Install fuel pressure gauge between pulsation damper and fuel distributor. • Short check connector terminal F/P to body GND using a jumper wire. (See 01–14A–6 AFTER REPAIR PROCEDURE [L3, AJ].) • Turn ignition switch to ON position (Engine OFF). • Inspect fuel line pressure. (See 01–14A–7 FUEL LINE PRESSURE INSPECTION [L3, AJ].) • Is fuel line pressure correct?	Yes	Go to the next step.
		No	**Zero or low:** • Inspect fuel pump relay and fuel pump related circuit. • Inspect for clogged fuel line. — If normal, replace fuel pump unit. (See 01–14A–13 FUEL PUMP UNIT REMOVAL/ INSTALLATION [L3, AJ].) **High:** • Replace fuel pump unit. (See 01–14A–13 FUEL PUMP UNIT REMOVAL/ INSTALLATION [L3, AJ].)
9	• Attempt to start engine at part throttle. • Does engine run smoothly at part throttle?	Yes	Inspect electronic throttle control system operation.
		No	Go to the next step.
10	• Is fuel line pressure held after ignition switch is turned to OFF position?	Yes	Go to the next step.
		No	Inspect fuel injector. (See 01–14A–32 FUEL INJECTOR INSPECTION [AJ].) • If fuel injector is normal, replace fuel pump unit. (See 01–14A–13 FUEL PUMP UNIT REMOVAL/ INSTALLATION [L3, AJ].)
11	• Disconnect vacuum hose from purge solenoid valve and plug opening end of vacuum hose. • Attempt to start engine. • Is starting condition improved?	Yes	Inspect if purge solenoid valve sticks open. (See 01–16A–13 PURGE SOLENOID VALVE INSPECTION [L3, AJ].)
		No	Go to the next step.
12	• Inspect MAF sensor for contamination. (See 01–40C–32 MASS AIR FLOW (MAF) SENSOR INSPECTION [AJ].) • Is there any contamination?	Yes	Replace MAF/IAT sensor.
		No	Go to the next step.
13	• Inspect for restriction in the exhaust system. • Is there any restriction?	Yes	Inspect exhaust system.
		No	Go to the next step.
14	• Inspect engine condition while tapping EGR valve housing. • Does engine condition improve?	Yes	Replace EGR valve. (See 01–16A–17 EGR VALVE REMOVAL/INSTALLATION [AJ].)
		No	Go to the next step.
15	• Inspect starting system. (See 01–19A–4 STARTER INSPECTION [L3, AJ].) (See 01–19A–9 STARTER INTERLOCK SWITCH INSPECTION (MTX).) • Is starting system normal?	Yes	Inspect for loose connectors or poor terminal contact. • If normal, remove EGR valve and visually inspect for mechanically stuck EGR valve. (See 01–16A–18 EGR VALVE INSPECTION [AJ].)
		No	Repair or replace components as required.
16	• Verify test results. — If normal, return to diagnostic index to service any additional symptoms. — If malfunction remains, inspect related Service Bulletins and/or On-line Repair Information and perform repair or diagnosis. • If vehicle is repaired, troubleshooting completed. • If vehicle is not repaired or additional diagnostic information is not available, reprogram PCM if later calibration is available. Retest.		

NO.5 ENGINE STALLS-AFTER START/AT IDLE [AJ]

E6U010318881W46

5	Engine stalls—after start/at idle
DESCRIPTION	• Engine stops unexpectedly.
POSSIBLE CAUSE	• A/C system operation is improper • Air leakage from intake-air system parts • Purge solenoid valve malfunction • Improper operation of electronic throttle control system • EGR valve malfunction • No signal from CKP sensor due to sensor or related wire • Vacuum leakage • Low engine compression • Erratic signal to ignition coil • Poor fuel quality • PCV valve malfunction • Air cleaner restriction • Restriction in exhaust system • Electrical connector disconnection • Open or short circuit in fuel pump body and related harness • No battery power supply to PCM or poor GND • Inadequate fuel pressure • Fuel pump body mechanical malfunction • Fuel leakage from fuel injector • Fuel injector clogging • Immobilizer system (PATS) and/or circuit malfunction • Ignition coil malfunction • Improper air/fuel ratio control • Improper valve timing • Improper operation of variable valve timing control system. • Pressure regulator malfunction **Warning** • **The following troubleshooting flow chart contains the fuel system diagnosis and repair procedures. Read the following warnings before performing the fuel system services:** — **Fuel vapor is hazardous. It can easily ignite, causing serious injury and damage. Always keep sparks and flames away from fuel.** — **Fuel line spills and leakage are dangerous. Fuel can ignite and cause serious injuries or death and damage. Fuel can also irritate skin and eyes. To prevent this, always complete "BEFORE REPAIR PROCEDURE" and "AFTER REPAIR PROCEDURE" described in this manual.** **(See 01–14A–6 BEFORE REPAIR PROCEDURE [L3, AJ].)** **(See 01–14A–6 AFTER REPAIR PROCEDURE [L3, AJ].)** **Caution** • **Disconnecting/connecting quick release connector without cleaning it may possibly cause damage to fuel pipe and quick release connector. Always clean quick release connector joint area before disconnecting/connecting, and make sure that it is free of foreign material.**

Diagnostic procedure

STEP	INSPECTION		ACTION
1	• Connect WDS or equivalent to DLC–2. • Do the following conditions appear? — Engine is not completely started. — DTC B1681 is displayed.	Yes	**Both conditions appear:** • Go to Step 3.
		No	**Either or other condition appear:** • Go to the next step.
2	• Does engine stall **after approx. 2 s** from when engine is started?	Yes	Go to the next step.
		No	Immobilizer system is normal. Go to Step 10.
3	• Is coil connector securely connected to coil?	Yes	Go to the next step.
		No	Connect coil connector securely. Return to Step 2.
4	• Does security light illuminate?	Yes	Go to the next step.
		No	Inspect instrument cluster and wiring harness.
5	• Connect WDS or equivalent to DLC–2 and retrieve DTC. • Are the following DTCs displayed? **DTC** **B1213, B1342, B1600, B1601, B1602, B1681, B2103, B2431**	Yes	Go to appropriate DTC test.
		No	Go to the next step.
6	• Is there continuity between PCM GND terminals 2H, 2L, 2D, 2BH, 2AZ and GND?	Yes	Go to the next step.
		No	Repair or replace wiring harness.
7	• Measure voltage between PCM GND terminals 2H, 2L, 2D, 2BH, 2AZ and coil terminal C. • Is voltage **below 1.0 V**?	Yes	Go to the next step.
		No	Repair or replace wiring harness.
8	• Turn ignition switch to ON position. • Measure voltage PCM terminal 1B and 1A. • Is voltage **B+**?	Yes	Go to the next step.
		No	Repair or replace wiring harness.
9	• Disconnect coil connector. • Turn ignition switch to ON position (Engine OFF). • Is there battery voltage at coil connector terminal D?	Yes	Inspect for following: • Open or short circuit between coil terminal A and PCM terminal 1J • Open or short circuit between coil terminal B and PCM terminal 1I
		No	Repair or replace wiring harness between coil connector terminal D and fuse panel.
10	• Verify following: — Vacuum connection — Air cleaner element — No air leakage from intake-air system — No restriction of intake-air system — Proper sealing of intake manifold and components attached to intake manifold: EGR valve — Ignition wiring — Fuel quality: proper octane, contamination, winter/summer blend — Electrical connections — Smooth operation of throttle valve • Are all items normal?	Yes	Go to the next step.
		No	Service as necessary. Repeat Step 10.
11	• Turn ignition switch to ON position (Engine OFF). • Disconnect throttle body connector. • Measure voltage at throttle body VREF terminal with ignition switch at ON position. • Is voltage **4.5—5.5 V**?	Yes	Go to the next step.
		No	Inspect and repair open or short circuit between PCM terminal 1BD and throttle body VREF terminal.
12	• Turn ignition switch to OFF position. • Disconnect APP sensor connector. • Measure voltage at APP sensor VREF terminal with ignition switch at ON position. • Is voltage **4.5—5.5 V**?	Yes	Go to the next step.
		No	Repair or replace open or short circuit for the following: • PCM terminal 1AR and APP sensor terminal D • PCM terminal 1AV and APP sensor terminal A

STEP	INSPECTION		ACTION
13	• Connect WDS or equivalent to DLC–2. • Turn ignition switch to ON position (Engine OFF). • Retrieve any DTCs. • Are there any DTCs displayed?	Yes	**DTC is displayed:** • Go to appropriate DTC test. **Communication error message is displayed:** • Inspect for following: — Open circuit between main relay terminal C and PCM terminal 1B or 1A — Open main relay GND circuit — Main relay is stuck open. — Open or poor GND circuit (PCM terminal 2H, 2L, 2D, 2BH, 2AZ) — Poor connection of vehicle body GND
		No	**No DTC is displayed:** • Go to the next step.
14	• Attempt to start engine at part throttle. • Does engine run smoothly at part throttle?	Yes	Inspect electronic throttle control system operation.
		No	Go to the next step.
15	• Connect WDS or equivalent to DLC–2. • Access RPM PID. • Is RPM PID indicating engine speed during engine cranking?	Yes	Go to the next step.
		No	Inspect for the following: • Open or short circuit in CKP sensor • Open or short circuit between CKP sensor and PCM terminal 2Z or 2Y • Open or short circuit in CKP sensor harnesses — If CKP sensor and harness are normal, go to the next step.
16	• Visually inspect CKP sensor and teeth of crankshaft pulley. • Are CKP sensor and teeth of crankshaft pulley normal?	Yes	Go to the next step.
		No	Replace malfunctioning part.
17	• Inspect ignition coil related harness condition (intermittent open or short) for all cylinders. • Are all harnesses condition normal?	Yes	Go to the next step.
		No	Repair suspected wiring harness.
18	• Perform spark test. (See 01–03C–68 Spark Test.) • Is strong blue spark visible at each cylinder?	Yes	Go to the next step. • If symptom occurs with A/C on, go to Step 24.
		No	Repair or replace malfunctioning part according to spark test results.
19	• Inspect spark plug conditions. • Is spark plug wet, covered with carbon or grayish white?	Yes	**Spark plug is wet or covered with carbon:** • Inspect for fuel leakage from injector. **Spark plug is grayish white:** • Inspect for clogged fuel injector.
		No	Install spark plugs on original cylinders. Go to the next step.
20	• Remove and shake PCV valve. • Does PCV valve rattle?	Yes	Go to the next step.
		No	Replace PCV valve.
21	• Inspect for restriction in the exhaust system. • Is there any restriction?	Yes	Inspect exhaust system.
		No	Go to the next step.
22	• Install fuel pressure gauge between fuel filter and fuel distributor. • Short the check connector terminal F/P to body GND using a jumper wire. (See 01–14A–6 AFTER REPAIR PROCEDURE [L3, AJ].) • Turn ignition switch to ON position (Engine OFF). • Inspect fuel line pressure. (See 01–14A–7 FUEL LINE PRESSURE INSPECTION [L3, AJ].) • Is fuel line pressure correct?	Yes	Go to the next step.
		No	**Zero or low:** • Inspect fuel pump relay and fuel pump related circuit. • Inspect for clogged fuel line. — If normal, replace fuel pump unit. (See 01–14A–13 FUEL PUMP UNIT REMOVAL/ INSTALLATION [L3, AJ].) **High:** • Replace fuel pump unit. (See 01–14A–13 FUEL PUMP UNIT REMOVAL/ INSTALLATION [L3, AJ].)
23	• Visually inspect for fuel leakage at fuel injector O-ring and fuel line. • Service if necessary. • Turn OFF fuel pump using FP PID in output state control of data logger function. • Does fuel line pressure hold after ignition switch is turned to OFF position?	Yes	Go to the next step.
		No	Inspect fuel injector. (See 01–14A–32 FUEL INJECTOR INSPECTION [AJ].) • If fuel injector is normal, replace fuel pump unit. (See 01–14A–13 FUEL PUMP UNIT REMOVAL/ INSTALLATION [L3, AJ].)

STEP	INSPECTION		ACTION
24	**Note** • The following test is for stall concerns with A/C on. If other symptoms exist, go to the next step: • Connect pressure gauges to A/C low and high pressure side lines. • Turn A/C on and measure low side and high side pressure. • Are pressures within specifications? (See 07–10–4 REFRIGERANT PRESSURE CHECK [L3, AJ].)	Yes	Go to the next step.
		No	If A/C is always on, go to symptom troubleshooting "No.24 A/C always on/A/C compressor runs continuously". For other symptoms, inspect following: • Refrigerant charging amount • Condenser fan operation
25	• Disconnect vacuum hose between purge solenoid valve and intake manifold from purge solenoid side. • Plug opening end of vacuum hose. • Start engine. • Is engine stall now eliminated?	Yes	Inspect if purge solenoid valve is stuck open. Inspect EVAP control system.
		No	Go to the next step.
26	• Is air leakage felt or heard at intake-air system components while racing engine to higher speed?	Yes	Repair or replace.
		No	Go to the next step.
27	• Inspect engine condition while tapping EGR valve housing. • Does engine condition improve?	Yes	Replace EGR valve. (See 01–16A–17 EGR VALVE REMOVAL/INSTALLATION [AJ].)
		No	Go to the next step.
28	• Perform variable valve timing control system operation inspection. (See 01–03C–74 Variable Valve Timing Control System Operation Inspection.) • Does variable valve timing control system work properly?	Yes	Go to the next step.
		No	Repair or replace malfunctioning part according to variable valve timing system operation inspection results.
29	• Is engine compression correct? (See 01–10C–6 COMPRESSION INSPECTION [AJ].)	Yes	Inspect valve timing.
		No	Inspect for cause.
30	• Verify test results. — If normal, return to diagnostic index to service any additional symptoms. — If malfunction remains, inspect related Service Bulletins and/or On-line Repair Information and perform repair or diagnosis. • If vehicle is repaired, troubleshooting completed. • If vehicle is not repaired or additional diagnostic information is not available, reprogram PCM if later calibration is available. Retest.		

NO.6 CRANKS NORMALLY BUT WILL NOT START [AJ]

E6U010318881W47

6	Cranks normally but will not start
DESCRIPTION	• Starter cranks engine at normal speed but engine will not run. • Refer to symptom troubleshooting "No.5 Engine stalls" if this symptom appears after engine stall. • Fuel in tank. • Battery is in normal condition.
POSSIBLE CAUSE	• No battery power supply to PCM • Air leakage from intake-air system • Open PCM GND or vehicle body GND • Improper operation of electronic throttle control system • EGR valve malfunction • No signal from CKP sensor due to sensor or related wire • No signal from CMP sensor due to sensor or related wire • Low engine compression • Vacuum leakage • Poor fuel quality • PCV valve malfunction • Air cleaner restriction • Restriction in exhaust system • Disconnected electrical connector • Open or short circuit in fuel pump and related harness • Inadequate fuel pressure • Fuel pump mechanical malfunction • Fuel leakage from injector • Fuel injector clogging • Purge solenoid valve malfunction • Ignition coil malfunction • Improper air/fuel ratio control • Improper valve timing • Improper operation of variable valve timing control system • Immobilizer system (PATS) and/or circuit malfunction • Pressure regulator malfunction **Warning** • **The following troubleshooting flow chart contains the fuel system diagnosis and repair procedures. Read the following warnings before performing the fuel system services:** **— Fuel vapor is hazardous. It can easily ignite, causing serious injury and damage. Always keep sparks and flames away from fuel.** **— Fuel line spills and leakage are dangerous. Fuel can ignite and cause serious injuries or death and damage. Fuel can also irritate skin and eyes. To prevent this, always complete "BEFORE REPAIR PROCEDURE" and "AFTER REPAIR PROCEDURE" described in this manual.** **(See 01–14A–6 BEFORE REPAIR PROCEDURE [L3, AJ].)** **(See 01–14A–6 AFTER REPAIR PROCEDURE [L3, AJ].)** **Caution** • **Disconnecting/connecting quick release connector without cleaning it may possibly cause damage to fuel pipe and quick release connector. Always clean quick release connector joint area before disconnecting/connecting, and make sure that it is free of foreign material.**

Diagnostic procedure

STEP	INSPECTION		ACTION
1	**Note** • The following test should be performed on vehicles with immobilizer system. Go to Step 12 for vehicles without immobilizer system. • Connect WDS or equivalent to DLC–2. — Do the following conditions appear? — Engine is not completely started. — DTC B1681 is displayed.	Yes	**Both conditions appear:** • Go to Step 3.
		No	**Either or other condition appear:** • Go to the next step.
2	• Does engine stall after **approx. 2 s** from when engine is started?	Yes	Go to the next step.
		No	Immobilizer system is normal. Go to Step 10.
3	• Is coil connector securely connected to coil?	Yes	Go to the next step.
		No	Connect coil connector securely. Return to Step 2.
4	• Does security light illuminate?	Yes	Go to the next step.
		No	Inspect instrument cluster and wiring harness.
5	• Connect WDS or equivalent to DLC-2 and retrieve DTC. • Are the following DTCs displayed? **DTC** **B1602, B1603, B1604, B1621, B1622, B1624**	Yes	Go to appropriate DTC test.
		No	Go to the next step.
6	• Is there continuity between PCM GND terminals 2H, 2L, 2D, 2BH, 2AZ and GND?	Yes	Go to the next step.
		No	Repair or replace wiring harness.
7	• Measure voltage between PCM GND terminals 2H, 2L, 2D, 2BH, 2AZ and coil terminal C. • Is voltage **below 1.0 V**?	Yes	Go to the next step.
		No	Repair or replace wiring harness.
8	• Turn ignition switch to ON position. • Measure voltage PCM terminal 1B and 1A. • Is voltage **B+**?	Yes	Go to the next step.
		No	Repair or replace wiring harness.
9	• Disconnect coil connector. • Turn ignition switch to ON position (Engine OFF). • Is there battery voltage at coil connector terminal D?	Yes	Inspect for following: • Open or short circuit between coil terminal A and PCM terminal 1J • Open or short circuit between coil terminal B and PCM terminal 1I
		No	Repair or replace wiring harness between coil connector terminal D and fuse panel.
10	• Verify following: — Vacuum connection — External fuel shut off or accessory (kill switch, alarm etc.) — Fuel quality: proper octane, contamination, winter/summer blend — No air leakage from intake-air system — Proper sealing of intake manifold and components attached to intake manifold: EGR valve — Ignition wiring — Electrical connections — Fuses — Smooth operation of throttle valve • Are all items normal?	Yes	Go to the next step.
		No	Service as necessary. Repeat Step 10.

STEP	INSPECTION		ACTION
11	• Connect WDS or equivalent to DLC–2. • Retrieve any DTCs. • Are there any DTCs displayed?	Yes	**DTC is displayed:** • Go to appropriate DTC test. **Communication error message is displayed:** • Inspect for the following: — Open circuit between main relay terminal C and PCM terminal 1B or 1A — Open main relay GND circuit — Main relay is stuck open. — Open or poor GND circuit (PCM terminal 2H, 2L, 2D, 2BH, 2AZ) — Poor connection of vehicle body GND
		No	**No DTC is displayed:** • Go to the next step.
12	• Turn ignition switch to ON position (Engine OFF). • Disconnect throttle body connector. • Measure voltage at throttle body VREF terminal with ignition switch at ON position. • Is voltage **4.5—5.5 V**?	Yes	Go to the next step.
		No	Inspect and repair open or short circuit between PCM terminal 2AR and throttle body VREF terminal.
13	• Turn ignition switch to OFF position. • Disconnect APP sensor connector. • Measure voltage at APP sensor VREF terminal with ignition switch at ON position. • Is voltage **4.5—5.5 V**?	Yes	Go to the next step.
		No	Repair or replace open or short circuit for the following: • PCM terminal 1AR and APP sensor terminal D • PCM terminal 1AV and APP sensor terminal A
14	• Will engine start and run smoothly at part throttle?	Yes	Inspect electronic throttle control system operation (See 01–03C–66 Electronic Throttle Control Inspection.)
		No	Go to the next step.
15	• Connect WDS or equivalent to DLC–2. • Access RPM PID. • Is RPM PID indicating engine speed when cranking engine?	Yes	Go to the next step.
		No	Inspect for the following: • Open or short circuit in CKP sensor • Open or short circuit between CKP sensor and PCM terminal 2Z or 2Y • Open or short circuit in CKP sensor harnesses — If CKP sensor and harness are normal, go to the next step.
16	• Visually inspect CKP sensor and teeth of crankshaft pulley. • Are CKP sensor and teeth of crankshaft pulley normal?	Yes	Go to the next step.
		No	Replace malfunctioning part.
17	• Inspect ignition coil related harnesses condition (intermittent open or short) for all cylinders. • Are all harnesses condition normal?	Yes	Go to the next step.
		No	Repair suspected wiring harness.
18	• Perform spark test. (See 01–03C–68 Spark Test.) • Is strong blue spark visible at each cylinder?	Yes	Go to the next step.
		No	Repair or replace malfunctioning part according to malfunction results.
19	• Inspect spark plug conditions. • Is spark plug wet, covered with carbon or grayish white?	Yes	**Spark plug is wet or covered with carbon:** • Inspect for fuel leakage from injector. **Spark plug is grayish white:** • Inspect for clogged fuel injector.
		No	Install spark plugs on original cylinders. Go to the next step.
20	• Remove and shake PCV valve. • Does PCV valve rattle?	Yes	Go to the next step.
		No	Replace PCV valve.
21	• Inspect for restriction in the exhaust system. • Is there any restriction?	Yes	Inspect exhaust system.
		No	Go to the next step.

STEP	INSPECTION		ACTION
22	• Install fuel pressure gauge between pulsation damper and fuel distributor. • Short check connector terminal F/P to body GND using a jumper wire. (See 01–14A–6 AFTER REPAIR PROCEDURE [L3, AJ].) • Turn ignition switch to ON (Engine OFF). • Is fuel line pressure correct when ignition switch is cycled ON/OFF five times? (See 01–14A–7 FUEL LINE PRESSURE INSPECTION [L3, AJ].)	Yes	Go to the next step.
		No	**Zero or low:** • Inspect fuel pump relay and fuel pump circuit. • Inspect for clogged fuel line. — If normal, replace fuel pump unit. (See 01–14A–13 FUEL PUMP UNIT REMOVAL/ INSTALLATION [L3, AJ].) **High:** • Replace fuel pump unit. (See 01–14A–13 FUEL PUMP UNIT REMOVAL/ INSTALLATION [L3, AJ].)
23	• Visually inspect for fuel leakage at fuel injector O-ring and fuel line. • Service as necessary. • Is fuel line pressure held after ignition switch is turned to OFF position?	Yes	Go to the next step.
		No	Inspect fuel injector. (See 01–14A–32 FUEL INJECTOR INSPECTION [AJ].) • If fuel injector is normal, replace fuel pump unit. (See 01–14A–13 FUEL PUMP UNIT REMOVAL/ INSTALLATION [L3, AJ].)
24	• Disconnect vacuum hose between purge solenoid valve and intake manifold from purge solenoid valve side. • Plug opening end of vacuum hose. • Attempt to start engine. • Is starting condition improved?	Yes	Inspect if purge solenoid valve is stuck open mechanically. Inspect EVAP control system.
		No	Go to the next step.
25	• Is air leakage felt or heard at intake-air system components while racing engine to higher speed?	Yes	Repair or replace.
		No	Go to the next step.
26	• Inspect engine condition while tapping EGR valve housing. • Does engine condition improve?	Yes	Replace EGR valve. (See 01–16A–17 EGR VALVE REMOVAL/INSTALLATION [AJ].)
		No	Go to the next step.
27	• Perform variable valve timing control system operation inspection. (See 01–03C–74 Variable Valve Timing Control System Operation Inspection.) • Does variable valve timing control system work properly?	Yes	Go to the next step.
		No	Repair or replace malfunctioning part according to variable valve timing control system operation inspection results.
28	• Is engine compression correct? (See 01–10C–6 COMPRESSION INSPECTION [AJ].)	Yes	Inspect valve timing.
		No	Inspect for causes.
29	• Verify test results. — If normal, return to diagnostic index to service any additional symptoms. — If malfunction remains, inspect related Service Bulletins and/or On-line Repair Information and perform repair or diagnosis. • If vehicle is repaired, troubleshooting completed. • If vehicle is not repaired or additional diagnostic information is not available, reprogram PCM if later calibration is available. Retest.		

NO.7 SLOW RETURN TO IDLE [AJ]

E6U010318881W48

7	Slow return to idle
DESCRIPTION	• Engine takes more time than normal to return to idle speed.
POSSIBLE CAUSE	• ECT sensor malfunction • Thermostat is stuck open. • Throttle body malfunction • Air leakage from intake-air system

Diagnostic procedure

STEP	INSPECTION		ACTION
1	• Connect WDS or equivalent to DLC–2. • Turn ignition switch to ON position (Engine OFF). • Retrieve any DTCs. • Are there any DTCs displayed?	Yes	**DTC is displayed:** • Go to appropriate DTC test.
		No	**No DTC is displayed:** • Go to the next step.
2	• Remove thermostat and inspect operation. (See 01–12A–9 THERMOSTAT REMOVAL/ INSTALLATION [L3, AJ].) (See 01–12A–10 THERMOSTAT INSPECTION [L3, AJ].) • Is thermostat normal?	Yes	ECT and thermostat are normal. Go to the next step.
		No	Access ECT PID. Inspect for both ECT PID and temperature gauge on instrument cluster readings. • If temperature gauge on instrument cluster indicates normal range but ECT PID is not same as temperature gauge reading, inspect ECT sensor. • If temperature gauge on instrument cluster indicates cold range but ECT PID is normal, inspect temperature gauge and heat gauge unit.
3	• Is throttle body free of contaminations?	Yes	Inspect for air leakage from intake-air system components while racing engine to higher speed.
		No	Clean or replace throttle body.
4	• Verify test results. — If normal, return to diagnostic index to service any additional symptoms. — If malfunction remains, inspect related Service Bulletins and/or On-line Repair Information and perform repa or diagnosis. • If vehicle is repaired, troubleshooting completed. • If vehicle is not repaired or additional diagnostic information is not available, reprogram PCM if later calibration is available. Retest.		

NO.8 ENGINE RUNS ROUGH/ROLLING IDLE [AJ]

E6U010318881W49

8	Engine runs rough/rolling idle
DESCRIPTION	• Engine speed fluctuates between specified idle speed and lower speed and engine shakes excessively. • Idle speed is too slow and engine shakes excessively.
POSSIBLE CAUSE	• Air leakage from intake-air system parts • A/C system improper operation • Spark plug malfunction • Erratic signal to ignition coil • Purge solenoid valve malfunction • Improper operation of electronic throttle control system • EGR valve malfunction • Erratic or no signal from CMP sensor • Low engine compression • Improper valve timing • Improper operation of valve timing control system • Erratic signal from CKP sensor • Poor fuel quality • PCV valve malfunction • Air cleaner restriction • Restriction in exhaust system • Disconnected electrical connectors • Inadequate fuel pressure • Fuel pump mechanical malfunction • Improper load signal input • Fuel line restriction or clogging • Improper operation or fuel injection control • Fuel leakage from fuel injector • Fuel injector clogging • Engine overheating • Vacuum leakage • Pressure regulator malfunction **Warning** • **The following troubleshooting flow chart contains the fuel system diagnosis and repair procedures. Read the following warnings before performing the fuel system services:** **— Fuel vapor is hazardous. It can easily ignite, causing serious injury and damage. Always keep sparks and flames away from fuel.** **— Fuel line spills and leakage are dangerous. Fuel can ignite and cause serious injuries or death and damage. Fuel can also irritate skin and eyes. To prevent this, always complete "BEFORE REPAIR PROCEDURE" and "AFTER REPAIR PROCEDURE" described in this manual.** **(See 01–14A–6 BEFORE REPAIR PROCEDURE [L3, AJ].)** **(See 01–14A–6 AFTER REPAIR PROCEDURE [L3, AJ].)** **Caution** • **Disconnecting/connecting quick release connector without cleaning it may possibly cause damage to fuel pipe and quick release connector. Always clean quick release connector joint area before disconnecting/connecting, and make sure that it is free of foreign material.**

Diagnostic procedure

STEP	INSPECTION		ACTION
1	• Verify the following: — External fuel shut off or accessory (kill switch, alarm etc.) — Fuel quality: proper octane, contamination, winter/summer blend — No air leakage from intake-air system — Proper sealing of intake manifold and components attached to intake manifold: EGR valve — Ignition wiring — Electrical connections — Fuses — Smooth operation of throttle valve • Are all items normal?	Yes	Go to the next step.
		No	Service as necessary. Repeat Step 1.
2	• Connect WDS or equivalent to DLC–2. • Turn ignition switch to ON position (Engine OFF). • Retrieve any DTCs. • Are there any DTCs displayed?	Yes	**DTC is displayed:** • Go to appropriate DTC test.
		No	**No DTC is displayed:** • Go to the next step.
3	• Is engine overheating?	Yes	Go to symptom troubleshooting "No.17 Cooling system concerns — Overheating".
		No	Go to the next step.
4	**Note** • The following test is for engine running at rough idle with A/C on. If other symptoms exist, go to the next step. • Connect pressure gauge to A/C low and high pressure side lines. • Start engine and run it at idle. • Turn A/C switch on. • Measure low side and high side pressures. • Are reading pressures within specifications? (See 07–10–4 REFRIGERANT PRESSURE CHECK [L3, AJ].)	Yes	Go to the next step.
		No	If A/C is always on, go to symptom troubleshooting "No.24 A/C always on/A/C compressor runs continuously". For other symptoms, inspect the following: • Refrigerant charging amount • Condenser fan operation
5	**Note** • The following test is for engine running rough with P/S on. If other symptoms exist, go to the next step. • Start engine and run it at idle • Measure voltage at PSP switch terminal A. • Is voltage normal?	Yes	Go to the next step.
		No	Inspect PSP switch operation and wiring harness between PSP switch terminal A and PCM terminal 2T.
6	• Visually inspect CKP sensor and teeth of crankshaft pulley. • Are CKP sensor and teeth of crankshaft pulley normal?	Yes	Go to the next step.
		No	Replace malfunctioning part.
7	• Inspect ignition coil related harnesses condition (intermittent open or short circuit) for all cylinders. • Are all harnesses condition normal?	Yes	Go to the next step.
		No	Repair suspected wiring harness.
8	• Inspect spark plug conditions. • Is spark plug wet, covered with carbon or grayish white?	Yes	**Spark plug is wet or covered with carbon:** • Inspect for fuel leakage from injector. **Spark plug is grayish white:** • Inspect for clogged fuel injector.
		No	Install spark plugs on original cylinders. Go to the next step.
9	• Perform electronic throttle control system operation inspection. (See 01–03C–66 Electronic Throttle Control Inspection.) • Does electronic throttle control system work properly?	Yes	Go to the next step.
		No	Repair or replace malfunctioning part according to electronic throttle control system operation inspection results.

STEP	INSPECTION		ACTION
10	• Install fuel pressure gauge between pulsation damper and fuel distributor. • Start engine and run it at idle. • Measure fuel line pressure at idle. (See 01–14A–7 FUEL LINE PRESSURE INSPECTION [L3, AJ].) • Is fuel line pressure correct at idle?	Yes	Go to the next step.
		No	**Zero or low:** • Inspect fuel pump relay and fuel pump circuit. • Inspect for clogged fuel line. • If normal, replace fuel pump unit. (See 01–14A–13 FUEL PUMP UNIT REMOVAL/INSTALLATION [L3, AJ].) **High:** • Replace fuel pump unit. (See 01–14A–13 FUEL PUMP UNIT REMOVAL/INSTALLATION [L3, AJ].)
11	• Visually inspect for fuel leakage at fuel injector, O-ring, and fuel line. • Service if necessary. • Does fuel line pressure hold after ignition switch is turned to OFF position?	Yes	Go to the next step.
		No	Inspect fuel injector. (See 01–14A–32 FUEL INJECTOR INSPECTION [AJ].) • If fuel injector is normal, replace fuel pump unit. (See 01–14A–13 FUEL PUMP UNIT REMOVAL/INSTALLATION [L3, AJ].)
12	• Connect WDS or equivalent to DLC–2. • Start the engine and run it at idle. • Access LONGFT1 and LONGFT2 PID. • Measure LONGFT1 and LONGFT2 PID at idle. • Is PID value **within -15% — +15%**?	Yes	Go to the next step.
		No	LONGFT1 and LONGFT2 PID is out of specification. **Less than specification (too rich):** • Inspect EVAP control system. — If system is normal, go to Step 14. **Greater than specification (too lean):** • Inspect for air leakage at intake-air system components. — If system normal, go to the next step.
13	• Disconnect vacuum hose between purge solenoid valve and intake manifold from purge solenoid valve side. • Plug opening end of vacuum hose. • Start engine. • Does engine condition improve?	Yes	Inspect if purge solenoid valve sticks open mechanically. Inspect EVAP control system.
		No	Go to the next step.
14	• Remove and shake PCV valve. • Does PCV valve rattle?	Yes	Go to the next step.
		No	Replace PCV valve. (See 01–16A–17 EGR VALVE REMOVAL/INSTALLATION [AJ].)
15	• Inspect for restriction in the exhaust system. • Is there any restriction?	Yes	Inspect exhaust system.
		No	Go to the next step.
16	• Visually inspect CMP sensor and tooth of camshaft pulley. • Are CMP sensor and tooth of camshaft pulley normal?	Yes	Go to the next step.
		No	Replace malfunctioning part.
17	• Inspect engine condition while tapping EGR valve housing. • Does engine condition improve?	Yes	Replace EGR valve.
		No	Go to the next step.
18	• Perform variable valve timing control system inspection. (See 01–03C–74 Variable Valve Timing Control System Operation Inspection.) • Does variable valve timing control system work properly?	Yes	Go to the next step.
		No	Repair or replace malfunctioning part according to variable valve timing control system inspection results.
19	• Is engine compression correct? (See 01–10C–6 COMPRESSION INSPECTION [AJ].)	Yes	Inspect valve timing.
		No	Inspect for causes.
20	• Verify test results. — If normal, return to diagnostic index to service any additional symptoms. — If malfunction remains, inspect related Service Bulletins and/or On-line Repair Information and perform repair or diagnosis. • If vehicle is repaired, troubleshooting completed. • If vehicle is not repaired or additional diagnostic information is not available, reprogram PCM if later calibration is available. Retest.		

NO.9 FAST IDLE/RUNS ON [AJ]

E6U010318881W50

9	Fast idle/runs on
DESCRIPTION	• Engine speed continues at fast idle after warm-up. • Engine runs after ignition switch is turned to OFF position.
POSSIBLE CAUSE	• ECT sensor malfunction • Air leakage from intake-air system • Throttle body malfunction • APP sensor misadjustment • Cruise control system operation improperly • Improper operation of electronic throttle control system

Diagnostic procedure

STEP	INSPECTION		ACTION
1	• Connect WDS or equivalent to DLC–2. • Access ECT PID. • Start and warm-up engine to normal operating temperature. • Is ECT PID reading between **82—112 °C {180—234 °F}**?	Yes	Go to the next step.
		No	**ECT PID is higher than 112 °C {234 °F}:** • Go to symptom troubleshooting "No.17 Cooling system concerns—Overheating". **ECT PID is less than 82 °C {180 °F}:** • Go to symptom troubleshooting "No.18 Cooling system concerns—Runs cold".
2	• Connect WDS or equivalent to DLC–2. • Retrieve any DTCs. • Are there any DTCs displayed?	Yes	**DTC is displayed:** • Go to appropriate DTC test.
		No	**No DTC is displayed:** • Go to the next step.
3	• Measure voltage at PCM terminal 1AN, 1AH, 1AB (MTX), 2X (MTX) and 2T. • Are voltage normal?	Yes	Go to Step 5.(MTX) Go to the next step.(ATX)
		No	**If PCM terminal 1AN voltage is not as specified:** • Inspect A/C switch, refrigerant pressure switch and fan switch. **If PCM terminal 1AH voltage is not as specified:** • Inspect refrigerant pressure switch (middle pressure). **If PCM terminal 1AB voltage is not as specified:** • Inspect clutch switch. **If PCM terminal 2X voltage is not as specified:** • Inspect neutral switch. **If PCM terminal 2T voltage is not as specified:** • Inspect PSP switch.
4	• Inspect indication of selector lever position at instrument cluster. • Does indicator lamp indicate properly selector lever position?	Yes	Go to the next step.
		No	Perform N position learning. (See 05–17B–28 Neutral Position Learning.) If problem remains replace TR switch. (See 05–17B–25 TCM REMOVAL/INSTALLATION [AW6A-EL].)
5	• Is there air leakage felt or heard at intake-air system components while racing engine to higher speed?	Yes	Repair or replace parts as necessary.
		No	Inspect following: • Electronic throttle control system operation • Accelerator position sensor adjustment
6	• Verify test results. — If normal, return to diagnostic index to service any additional symptoms. — If malfunction remains, inspect related Service Bulletins and/or On-line Repair Information and perform repair or diagnosis. • If vehicle is repaired, troubleshooting completed. • If vehicle is not repaired or additional diagnostic information is not available, reprogram PCM if later calibration is available. Retest.		

NO.10 LOW IDLE/STALLS DURING DECELERATION [AJ]

E6U010318881W51

10	Low idle/stalls during deceleration
DESCRIPTION	• Engine stops unexpectedly at beginning of deceleration or recovery from deceleration.
POSSIBLE CAUSE	• Vacuum leakage • Improper operation of electronic throttle control system • Air leakage from intake-air system • Improper air/fuel ratio mixture control • EVAP control system malfunction • APP sensor or related circuit malfunction • APP sensor misadjustment • Neutral/clutch switch or related circuit malfunction (MTX) • TR switch or related circuit malfunction (ATX) • TP sensor or related circuit malfunction • MAF sensor or related circuit malfunction • Brake switch or related circuit malfunction • Improper operation of A/C magnetic clutch

Diagnostic procedure

STEP	INSPECTION		ACTION
1	• Does engine idle rough?	Yes	Go to symptom troubleshooting "No.8 Engine runs rough/ rolling idle".
		No	Go to the next step.
2	• Turn off A/C switch and fan switch. • Does A/C magnetic clutch engage?	Yes	Go to symptom troubleshooting "No.24 A/C always on or A/C compressor runs continuously"?
		No	Go to the next step.
3	• Verify following: — Proper routing and no damage to vacuum lines — No air leakage from intake-air system • Are all items normal?	Yes	Go to the next step.
		No	Service as necessary. Repeat Step 3.
4	• Connect WDS or equivalent to DLC–2. • Turn ignition switch to ON position (Engine OFF). • Retrieve any DTC. • Are there any DTCs displayed?	Yes	**DTC is displayed:** • Go to appropriate DTC test.
		No	**No DTC is displayed:** • Go to the next step.
5	• Perform electronic throttle control system operation inspection. (See 01–03C–66 Electronic Throttle Control Inspection.) • Does electronic controlled throttle work properly?	Yes	Go to the next step.
		No	Repair or replace malfunctioning part according to electronic throttle control system operation inspection results.
6	• Disconnect vacuum hose between purge solenoid valve and intake manifold from purge solenoid valve side. • Plug opening end of vacuum hose. • Drive vehicle. • Does engine condition improve?	Yes	Inspect EVAP control system.
		No	Go to the next step.
7	• Connect WDS or equivalent to DLC–2. • Access APP1, APP2, TP_REL, MAF and VSS PIDs. • Monitor each PID while driving vehicle. (See 01–40C–6 PCM INSPECTION [AJ].) • Are PIDs normal?	Yes	Intermittent concern exists. (See 01–03C–5 INTERMITTENT CONCERN TROUBLESHOOTING [AJ].)
		No	**APP1 or APP2 PIDs:** • Inspect APP sensor. (See 01–40C–26 ACCELERATOR PEDAL POSITION (APP) SENSOR INSPECTION [AJ].) **TP_REL PID:** • Inspect TP sensor. (See 01–40C–28 THROTTLE POSITION (TP) SENSOR INSPECTION [AJ].) **MAF PID:** • Inspect MAF sensor. (See 01–40C–32 MASS AIR FLOW (MAF) SENSOR INSPECTION [AJ].) **VSS PID:** • Inspect VSS. (See 05–15B–5 VEHICLE SPEED SENSOR INSPECTION (WITHOUT ABS) [A65M-R].)

STEP	INSPECTION	ACTION
8	• Verify test results. — If normal, return to diagnostic index to service any additional symptoms. — If malfunction remains, inspect related Service Bulletins and/or On-line Repair Information and perform repair or diagnosis. • If vehicle is repaired, troubleshooting completed. • If vehicle is not repaired or additional diagnostic information is not available, reprogram PCM if later calibration is available. Retest.	

NO.11 ENGINE STALLS/QUITS, ENGINE RUNS ROUGH, MISSES, BUCK/JERK, HESITATION/STUMBLE, SURGES [AJ]

E6U010318881W52

11	**Engine stalls/quits—acceleration/cruise** **Engine runs rough—acceleration/cruise** **Misses—acceleration/cruise** **Buck/jerk—acceleration/cruise/deceleration** **Hesitation/stumble—acceleration** **Surges—acceleration/cruise**
DESCRIPTION	• Engine stops unexpectedly at beginning of acceleration or during acceleration. • Engine stops unexpectedly while cruising. • Engine speed fluctuates during acceleration or cruising. • Engine misses during acceleration or cruising. • Vehicle bucks/jerks during acceleration, cruising or deceleration. • Momentary pause at beginning of acceleration or during acceleration • Momentary minor irregularity in engine output

POSSIBLE CAUSE	• A/C system improper operation • Erratic signal or no signal from CMP sensor • Air leakage from intake-air system parts • Purge solenoid valve malfunction • Improper operation of electronic throttle control system • EGR valve malfunction • Erratic signal from CKP sensor • Low engine compression • Vacuum leakage • Poor fuel quality • Main relay intermittent malfunction • Throttle body malfunction • Engine overheating • Spark plug malfunction • Improper air/fuel mixture control operation • Erratic signal to ignition coil • Air cleaner restriction • PCV valve malfunction • Improper valve timing due to jumping out of timing belt • Restriction in exhaust system • Intermittent open or short in fuel pump circuit • Inadequate fuel pressure • Fuel line and/or fuel filter restriction or clogging • Pressure regulator malfunction • APP sensor misadjustment • TP sensor misadjustment • Fuel pump mechanical malfunction • Fuel leakage from fuel injector • Fuel injector clogging • Intermittent open or short of MAF sensor, APP sensor, TP sensor and VSS • ATX malfunction (ATX) • Clutch slippage (MTX) **Warning** • **The following troubleshooting flow chart contains the fuel system diagnosis and repair procedures. Read the following warnings before performing the fuel system services:** **— Fuel vapor is hazardous. It can easily ignite, causing serious injury and damage. Always keep sparks and flames away from fuel.** **— Fuel line spills and leakage are dangerous. Fuel can ignite and cause serious injuries or death and damage. Fuel can also irritate skin and eyes. To prevent this, always complete "BEFORE REPAIR PROCEDURE" and "AFTER REPAIR PROCEDURE" described in this manual.** **(See 01–14A–6 BEFORE REPAIR PROCEDURE [L3, AJ].)** **(See 01–14A–6 AFTER REPAIR PROCEDURE [L3, AJ].)** **Caution** • **Disconnecting/connecting quick release connector without cleaning it may possibly cause damage to fuel pipe and quick release connector. Always clean quick release connector joint area before disconnecting/connecting, and make sure that it is free of foreign material.**

Diagnostic procedure

STEP	INSPECTION		ACTION
1	• Verify following: — Vacuum connection — Air cleaner element — No air leakage from intake-air system — No restriction of intake-air system — Proper sealing of intake manifold and components attached to intake manifold: EGR valve — Ignition wiring — Fuel quality: proper octane, contamination, winter/summer blend — Electrical connections — Smooth operation of throttle valve • Are all items normal?	Yes	Go to the next step.
		No	Service as necessary. Repeat Step 1.
2	• Connect WDS or equivalent DLC–2. • Turn ignition switch to ON position (Engine OFF). • Retrieve any DTCs. • Are there any DTCs displayed?	Yes	**DTC is displayed:** • Go to appropriate DTC test.
		No	**No DTC is displayed:** • Go to the next step.
3	• Is engine overheating?	Yes	Go to symptom troubleshooting "No.17 Cooling system concerns—Overheating".
		No	Go to the next step.
4	• Connect WDS or equivalent to DLC–2. • Access APP1, APP2, RPM, MAF, TP_REL and VSS PIDs. • Drive vehicle while monitoring PIDs. • Are PIDs within specification? (See 01–40C–6 PCM INSPECTION [AJ].)	Yes	Go to the next step.
		No	**APP1, APP2, PIDs:** • Inspect if output signal APP sensor changes smoothly. (See 01–40C–26 ACCELERATOR PEDAL POSITION (APP) SENSOR INSPECTION [AJ].) **RPM PID:** • Inspect CKP sensor and related harness for vibration or intermittent open/short circuit, or both. (See 01–40C–41 CRANKSHAFT POSITION (CKP) SENSOR INSPECTION [AJ].) **MAF PID:** • Inspect for intermittent open circuit between MAF sensor and related wire harness. (See 01–40C–32 MASS AIR FLOW (MAF) SENSOR INSPECTION [AJ].) **TP_REL PID:** • Inspect if output signal from TP sensor changes smoothly. (See 01–40C–28 THROTTLE POSITION (TP) SENSOR INSPECTION [AJ].) **VSS PID:** • Inspect for intermittent open circuit between VSS and related wire harness. (See 05–15B–5 VEHICLE SPEED SENSOR INSPECTION (WITHOUT ABS) [A65M-R].)
5	• Visually inspect CKP sensor and teeth of crankshaft pulley. • Are CKP sensor and teeth of crankshaft pulley normal?	Yes	Go to the next step.
		No	Replace malfunctioning part.
6	• Inspect spark plug conditions. • Is spark plug wet, covered with carbon or grayish white?	Yes	**Spark plug is wet or covered with carbon:** • Inspect for fuel leakage from fuel injector. **Spark plug is grayish white:** • Inspect for clogged fuel injector.
		No	Install spark plugs on original cylinders. Go to the next step.
7	• Remove and shake PCV valve. • Does PCV valve rattle?	Yes	Go to the next step.
		No	Replace PCV valve.

STEP	INSPECTION		ACTION
8	• Perform electronic throttle control system operation inspection. (See 01–03C–66 Electronic Throttle Control Inspection.) • Does electronic controlled throttle work properly?	Yes	Go to the next step.
		No	Repair or replace malfunctioning part according to electronic throttle control system operation inspection results.
9	• Inspect for restriction in the exhaust system. • Is there any restriction?	Yes	Inspect exhaust system.
		No	Go to the next step.
10	• Install fuel pressure gauge between pulsation damper and fuel distributor. • Short the check connector terminal F/P to body GND using a jumper wire. (See 01–14A–6 AFTER REPAIR PROCEDURE [L3, AJ].) • Turn ignition switch to ON position (Engine OFF). • Inspect fuel line pressure. (See 01–14A–7 FUEL LINE PRESSURE INSPECTION [L3, AJ].) • Is fuel line pressure correct with ignition switch at ON position?	Yes	Go to the next step.
		No	**Zero or low:** • Inspect fuel pump relay and fuel pump. • Inspect for clogged fuel line. — If normal, replace fuel pump unit. (See 01–14A–13 FUEL PUMP UNIT REMOVAL/ INSTALLATION [L3, AJ].) **High:** • Replace fuel pump unit. (See 01–14A–13 FUEL PUMP UNIT REMOVAL/ INSTALLATION [L3, AJ].)
11	• Visually inspect for fuel leakage at fuel injector O-ring and fuel line. • Service if necessary. • Does fuel line pressure hold after ignition switch is turned to OFF position? (See 01–14A–7 FUEL LINE PRESSURE INSPECTION [L3, AJ].)	Yes	Go to the next step.
		No	Inspect fuel injector. (See 01–14A–32 FUEL INJECTOR INSPECTION [AJ].) • If normal, replace fuel pump unit. (See 01–14A–13 FUEL PUMP UNIT REMOVAL/ INSTALLATION [L3, AJ].)
12	**Note** • The following test is for engine stall with A/C on. If other symptom exists, go to the next step. • Connect a pressure gauge to A/C low and high pressure side lines. • Turn A/C on and measure low side and high side pressures. • Are pressures within specifications? (See 07–10–4 REFRIGERANT PRESSURE CHECK [L3, AJ].)	Yes	Go to the next step.
		No	If A/C is always on, go to symptom troubleshooting "No.24 A/C always on/A/C compressor runs continuously". For other symptoms, inspect following: • Refrigerant charging amount • Condenser fan operation
13	**Note** • Following test is performed for symptom with cruise control on. If other symptom exists, go to the next step. • Inspect cruise control system. • Is cruise control system normal?	Yes	Go to the next step.
		No	Repair or replace malfunctioning part.
14	• Disconnect vacuum hose between purge solenoid valve and intake manifold from purge solenoid valve side. • Plug opening end of vacuum hose. • Drive vehicle. • Does engine condition improve?	Yes	Inspect if purge solenoid valve is stuck open mechanically. Inspect EVAP control system.
		No	Go to the next step.
15	• Visually inspect CMP sensor and projections of camshaft pulley. • Are CMP sensor and projections of camshaft pulley normal?	Yes	Go to the next step.
		No	Replace malfunctioning parts.
16	• Inspect EGR system. • Is EGR system normal?	Yes	Go to the next step.
		No	Replace malfunctioning parts.
17	• Is engine compression correct? (See 01–10C–6 COMPRESSION INSPECTION [AJ].)	Yes	Inspect following: • Valve timing • Internal transaxle part
		No	Inspect for cause.

STEP	INSPECTION	ACTION
18	• Verify test results. — If normal, return to diagnostic index to service any additional symptoms. — If malfunction remains, inspect related Service Bulletins and/or On-line Repair Information and perform repair or diagnosis. • If vehicle is repaired, troubleshooting completed. • If vehicle is not repaired or additional diagnostic information is not available, reprogram PCM if later calibration is available. Retest.	

NO.12 LACK/LOSS OF POWER-ACCELERATION/CRUISE [AJ]

E6U010318881W53

12	Lack/loss of power—acceleration/cruise
DESCRIPTION	• Performance is poor under load (e.g. power down when climbing hills).
POSSIBLE CAUSE	• Improper A/C system operation • Erratic signal or no signal from CMP sensor • Air leakage from intake-air system parts • Improper operation of electronic throttle control system • Purge control solenoid malfunction • EGR valve malfunction • Brake dragging • Erratic signal from CKP sensor • Low engine compression • Vacuum leakage • Poor fuel quality • Erratic signal ignition coil • Engine overheating • Throttle body malfunction • Spark plug malfunction • Air cleaner restriction • PCV valve malfunction • Improper valve timing due to jumping out of timing belt • Improper operation of variable valve timing control system • Restriction in exhaust system • Intermittent open or short in fuel pump circuit • Inadequate fuel pressure • Fuel pump mechanical malfunction • Fuel line restriction or clogging • Fuel leakage from fuel injector • Fuel injector clogging • Intermittent open or short of MAF sensor, APP sensor, TP sensor and VSS • ATX malfunction (ATX) • Clutch slippage (MTX) **Warning** • **The following troubleshooting flow chart contains the fuel system diagnosis and repair procedures. Read the following warnings before performing the fuel system services:** **— Fuel vapor is hazardous. It can easily ignite, causing serious injury and damage. Always keep sparks and flames away from fuel.** **— Fuel line spills and leakage are dangerous. Fuel can ignite and cause serious injuries or death and damage. Fuel can also irritate skin and eyes. To prevent this, always complete "BEFORE REPAIR PROCEDURE" and "AFTER REPAIR PROCEDURE" described in this manual.** **(See 01–14A–6 BEFORE REPAIR PROCEDURE [L3, AJ].)** **(See 01–14A–6 AFTER REPAIR PROCEDURE [L3, AJ].)** **Caution** • **Disconnecting/connecting quick release connector without cleaning it may possibly cause damage to fuel pipe and quick release connector. Always clean quick release connector joint area before disconnecting/connecting, and make sure that it is free of foreign material.**

Diagnostic procedure

STEP	INSPECTION		ACTION
1	• Verify the following: — Vacuum connection — Air cleaner element — No air leakage from intake-air system — No restriction of intake-air system — Proper sealing of intake manifold and components attached to intake manifold: EGR valve — Fuel quality: proper octane, contamination, winter/summer blend • Are all items normal?	Yes	Go to the next step.
		No	Service as necessary. Repeat Step 1.
2	• Connect WDS or equivalent to DLC–2. • Tun ignition switch to ON position (Engine OFF). • Retrieve any DTCs. • Are there any DTCs displayed?.	Yes	**DTC is displayed:** • Go to appropriate DTC test.
		No	**No DTC is displayed:** • Go to the next step.
3	Is engine overheating?	Yes	Go to symptom troubleshooting "No.17 Cooling system concerns—Overheating".
		No	Go to the next step.
4	• Connect WDS or equivalent to DLC–2. • Access APP1, APP2, RPM, MAF,TP_REL and VSS PIDs. • Drive vehicle with monitoring PIDs. • Are PIDs within specification? (See 01–40C–6 PCM INSPECTION [AJ].)	Yes	Go to the next step.
		No	**APP1, APP2, PIDs:** • Inspect if output signal from APP sensor changes smoothly. (See 01–40C–26 ACCELERATOR PEDAL POSITION (APP) SENSOR INSPECTION [AJ].) **RPM PID:** • Inspect CKP sensor and related harness for vibration or intermittent open/short circuit, or both. (See 01–40C–41 CRANKSHAFT POSITION (CKP) SENSOR INSPECTION [AJ].) **MAF PID:** • Inspect for intermittent open circuit between MAF sensor and related wire harness. (See 01–40C–32 MASS AIR FLOW (MAF) SENSOR INSPECTION [AJ].) **TP_REL PID:** • Inspect if output signal from TP sensor changes smoothly. (See 01–40C–28 THROTTLE POSITION (TP) SENSOR INSPECTION [AJ].) **VSS PID:** • Inspect for intermittent open circuit between VSS and related wire harness. (See 05–15B–5 VEHICLE SPEED SENSOR INSPECTION (WITHOUT ABS) [A65M-R].)
5	• Visually inspect CKP sensor and teeth of crankshaft pulley. • Are CKP sensor and teeth of crankshaft pulley normal?	Yes	Go to the next step.
		No	Replace malfunctioning part.
6	• Inspect spark plug conditions. • Is spark plug wet, covered with carbon or grayish white?	Yes	**Spark plug is wet or covered with carbon:** • Inspect for fuel leakage from fuel injector. • Inspect ignition system for suspect cylinder. **Spark plug is grayish white:** • Inspect for clogged fuel injector.
		No	Install spark plugs on original cylinders. Go to the next step.
7	• Remove and shake PCV valve. • Does PCV valve rattle?	Yes	Go to the next step.
		No	Replace PCV valve.
8	• Perform electronic throttle control system operation inspection. (See 01–03C–66 Electronic Throttle Control Inspection.) • Does electronic controlled throttle work properly?	Yes	Go to the next step.
		No	Repair or replace malfunctioning part according to electronic throttle control system operation inspection results.

STEP	INSPECTION		ACTION
9	• Inspect for restriction in the exhaust system. • Is there any restriction?	Yes	Inspect exhaust system.
		No	Go to the next step.
10	• Install fuel pressure gauge between pulsation damper and fuel distributor. • Short the check connector terminal F/P to body GND using a jumper wire. (See 01–14A–6 AFTER REPAIR PROCEDURE [L3, AJ].) • Turn ignition switch to ON position (Engine OFF). • Inspect fuel line pressure. (See 01–14A–7 FUEL LINE PRESSURE INSPECTION [L3, AJ].) • Is fuel line pressure correct with ignition switch at ON position?	Yes	Go to the next step.
		No	**Zero or low:** • Inspect fuel pump relay and fuel pump circuit. • Inspect for clogged fuel line. — Inspect normal, replace fuel pump unit. (See 01–14A–13 FUEL PUMP UNIT REMOVAL/ INSTALLATION [L3, AJ].) **High:** • Replace fuel pump unit. (See 01–14A–13 FUEL PUMP UNIT REMOVAL/ INSTALLATION [L3, AJ].)
11	**Note** • The following test is for engine stall with A/C on. If other symptom exists, go to the next step. • Connect pressure gauge to A/C low and high side pressure lines. • Turn A/C on and measure low side and high side pressures. • Are pressures within specifications? (See 07–10–4 REFRIGERANT PRESSURE CHECK [L3, AJ].)	Yes	Go to the next step.
		No	If A/C is always on, go to symptom troubleshooting "No.24 A/C always on/A/C compressor runs continuously". For other symptoms, inspect following: • Refrigerant charging amount • Condenser fan operation
12	• Inspect A/C cut-off operation. • Does A/C cut-off work properly?	Yes	Go to the next step.
		No	Inspect A/C cut-off system components.
13	• Disconnect vacuum hose between purge solenoid valve and intake manifold from purge solenoid valve side. • Plug opened end of vacuum hose. • Drive vehicle. • Does engine condition improve?	Yes	Inspect if purge solenoid valve is stuck open mechanically. Inspect EVAP control system.
		No	Go to the next step.
14	• Visually inspect CMP sensor and projections of camshaft pulley. • Are CMP sensor and projections of camshaft pulley normal?	Yes	Go to the next step.
		No	Replace malfunctioning part.
15	• Inspect EGR system. • Is EGR system normal?	Yes	Go to the next step.
		No	Replace malfunctioning part.
16	• Perform Variable Valve Timing Control System Inspection. (See 01–03C–74 Variable Valve Timing Control System Operation Inspection.) • Does variable valve timing control system work properly?	Yes	Go to the next step.
		No	Repair or replace malfunctioning part according to Variable Valve Timing Control System Inspection results.
17	• Is engine compression correct? (See 01–10C–6 COMPRESSION INSPECTION [AJ].)	Yes	Inspect following: • Valve timing • Internal transaxle components (ATX) • Clutch (MTX) • Brake system for dragging
		No	Inspect for cause.
18	• Verify test results. — If normal, return to diagnostic index to service any additional symptoms. — If malfunction remains, inspect related Service Bulletins and/or On-line Repair Information and perform repair or diagnosis. • If vehicle is repaired, troubleshooting completed. • If vehicle is not repaired or additional diagnostic information is not available, reprogram PCM if later calibration is available. Retest.		

NO.13 KNOCKING/PINGING-ACCELERATION/CRUISE [AJ]

E6U010318881W54

13	Knocking/pinging—acceleration/cruise
ESCRIPTION	• Sound is produced when air/fuel mixture is ignited by something other than spark plug (e.g. hot spot in combustion chamber).
POSSIBLE CAUSE	• Engine overheating due to cooling system malfunction • ECT sensor malfunction • IAT sensor malfunction • MAF sensor malfunction • Erratic signal from CMP sensor • Inadequate engine compression • Inadequate fuel pressure • KS and related circuit malfunction **Warning** • **The following troubleshooting flow chart contains the fuel system diagnosis and repair procedures. Read the following warnings before performing the fuel system services:** **— Fuel vapor is hazardous. It can easily ignite, causing serious injury and damage. Always keep sparks and flames away from fuel.** **— Fuel line spills and leakage are dangerous. Fuel can ignite and cause serious injuries or death and damage. Fuel can also irritate skin and eyes. To prevent this, always complete "BEFORE REPAIR PROCEDURE" and "AFTER REPAIR PROCEDURE" described in this manual.** **(See 01–14A–6 BEFORE REPAIR PROCEDURE [L3, AJ].)** **(See 01–14A–6 AFTER REPAIR PROCEDURE [L3, AJ].)** **Caution** • **Disconnecting/connecting quick release connector without cleaning it may possibly cause damage to fuel pipe and quick release connector. Always clean quick release connector joint area before disconnecting/connecting, and make sure that it is free of foreign material.**

Diagnostic procedure

STEP	INSPECTION		ACTION
1	• Connect WDS or equivalent to DLC–2. • Access ECT PID. • Verify ECT PID is **less than 116 °C {241 °F}** during driving. • Is ECT PID less than specification?	Yes	Go to the next step.
		No	Inspect cooling system for cause of overheating.
2	• Access IAT, MAF PIDs. • Monitor each PID. • Are PIDs normal?	Yes	Go to the next step.
		No	**IAT PID:** • Inspect IAT sensor. (See 01–40C–31 INTAKE AIR TEMPERATURE (IAT) SENSOR INSPECTION [AJ].) **MAF PID:** • Inspect MAF sensor. (See 01–40C–32 MASS AIR FLOW (MAF) SENSOR INSPECTION [AJ].)
3	• Connect WDS or equivalent to DLC–2. • Turn ignition switch to ON position (Engine OFF). • Retrieve any DTCs. • Are there any DTCs displayed?	Yes	**DTC is displayed:** • Go to appropriate DTC test.
		No	**No DTC is displayed:** • Go to the next step.
4	• Is engine compression correct? (See 01–10C–6 COMPRESSION INSPECTION [AJ].)	Yes	Go to the next step.
		No	Inspect for cause.
5	• Install fuel pressure gauge between pulsation damper and fuel distributor. • Start engine and run it at idle. • Measure fuel line pressure at idle. (See 01–14A–7 FUEL LINE PRESSURE INSPECTION [L3, AJ].) • Is fuel line pressure correct at idle?	Yes	Go to the next step.
		No	**Zero or low:** • Inspect fuel pump relay fuel pump circuit. • Inspect for clogged fuel line. — If normal, replace fuel pump unit. (See 01–14A–13 FUEL PUMP UNIT REMOVAL/INSTALLATION [L3, AJ].) **High:** • Replace fuel pump unit. (See 01–14A–13 FUEL PUMP UNIT REMOVAL/INSTALLATION [L3, AJ].)

STEP	INSPECTION		ACTION
6	• Inspect KS. (See 01–40C–38 KNOCK SENSOR (KS) INSPECTION [AJ].) • Is KS normal?	Yes	Inspect ignition timing. (See 01–10C–39 ENGINE TUNE-UP [AJ].)
		No	Replace KS. (See 01–40C–38 KNOCK SENSOR (KS) REMOVAL/ INSTALLATION [AJ].)
7	• Verify test results. — If normal, return to diagnostic index to service any additional symptoms. — If malfunction remains, inspect related Service Bulletins and/or On-line Repair Information and perform repair or diagnosis. • If vehicle is repaired, troubleshooting completed. • If vehicle is not repaired or additional diagnostic information is not available, reprogram PCM if later calibration is available. Retest.		

NO.14 POOR FUEL ECONOMY [AJ]

E6U010318881W55

14	Poor fuel economy
DESCRIPTION	• Fuel economy is unsatisfactory.
POSSIBLE CAUSE	• Contaminated air cleaner element • Engine cooling system malfunction • Improper ATF level (ATX) • Weak spark • Poor fuel quality • Erratic or no signal from CMP sensor • Clutch slippage (MTX) • Improper operation of variable valve timing control system • Improper coolant level • Inadequate fuel pressure • Spark plug malfunction • PCV valve malfunction • Brake dragging • Improper valve timing due to jumping out of timing belt • Contaminated MAF sensor • Improper engine compression • Exhaust system clogging **Warning** • **The following troubleshooting flow chart contains the fuel system diagnosis and repair procedures. Read the following warnings before performing the fuel system services:** **— Fuel vapor is hazardous. It can easily ignite, causing serious injury and damage. Always keep sparks and flames away from fuel.** **— Fuel line spills and leakage are dangerous. Fuel can ignite and cause serious injuries or death and damage. Fuel can also irritate skin and eyes. To prevent this, always complete "BEFORE REPAIR PROCEDURE" and "AFTER REPAIR PROCEDURE" described in this manual.** **(See 01–14A–6 BEFORE REPAIR PROCEDURE [L3, AJ].)** **(See 01–14A–6 AFTER REPAIR PROCEDURE [L3, AJ].)** **Caution** • **Disconnecting/connecting quick release connector without cleaning it may possibly cause damage to fuel pipe and quick release connector. Always clean quick release connector joint area before disconnecting/connecting, and make sure that it is free of foreign material.**

Diagnostic procedure

STEP	INSPECTION		ACTION
1	• Inspect following: — Air cleaner element for contamination — ATF level (ATX) — Fuel quality — Coolant level — Clutch slippage (MTX) • Are all items normal?	Yes	Go to the next step.
		No	Service as necessary. Repeat Step 1.
2	• Connect WDS or equivalent to DLC–2. • Tun ignition switch to ON position (Engine OFF). • Retrieve any DTCs. • Are there any DTCs displayed?	Yes	**DTC is displayed:** • Go to appropriate DTC test.
		No	**No DTC is displayed:** • Go to the next step.
3	• Access ECT PID. • Drive vehicle while monitoring PID. (See 01–40C–6 PCM INSPECTION [AJ].) • Is PID within specification?	Yes	Go to the next step.
		No	Inspect for coolant leakage. Inspect cooling fan operations or thermostat operations.
4	• Perform spark test. (See 01–03C–68 Spark Test.) • Is strong blue spark visible at each cylinder?	Yes	Inspect for following: • Spark plugs malfunction • CMP sensor is installed improperly. • Trigger wheel damage on camshaft • Open or short circuit on CMP sensor • Open or short circuit between CMP sensor and PCM terminal 2AA, 2AB, 2AD or 2AE. Repair or replace malfunctioning part. • If normal, go to the next step.
		No	Repair or replace malfunctioning part according to spark test results.
5	• Install fuel pressure gauge between fuel filter and fuel distributor. • Start engine and run it at idle. • Measure fuel line pressure at idle. (See 01–14A–7 FUEL LINE PRESSURE INSPECTION [L3, AJ].) • Is fuel line pressure correct at idle?	Yes	Go to the next step.
		No	**Zero or low:** • Inspect fuel pump relay and fuel pump circuit. • Inspect for clogged fuel line. — If normal, replace fuel pump unit. (See 01–14A–13 FUEL PUMP UNIT REMOVAL/ INSTALLATION [L3, AJ].) **High:** • Replace fuel pump unit. (See 01–14A–13 FUEL PUMP UNIT REMOVAL/ INSTALLATION [L3, AJ].)
6	• Remove and shake PCV valve. • Does PCV valve rattle?	Yes	Go to the next step.
		No	Replace PCV valve.
7	• Inspect for restriction in the exhaust system. • Is there any restriction?	Yes	Inspect exhaust system.
		No	Go to the next step.
8	• Is brake system functioning properly?	Yes	Go to the next step.
		No	Inspect for cause.
9	• Inspect MAF sensor for contamination. (See 01–40C–32 MASS AIR FLOW (MAF) SENSOR INSPECTION [AJ].) • Is there any contamination?	Yes	Replace MAF/IAT sensor.
		No	Go to the next step.
10	• Perform variable valve timing control system inspection. (See 01–03C–74 Variable Valve Timing Control System Operation Inspection.) • Does variable valve timing control system work properly?	Yes	Go to the next step.
		No	Repair or replace malfunctioning part according to variable valve timing control system inspection results.
11	• Is engine compression correct? (See 01–10C–6 COMPRESSION INSPECTION [AJ].)	Yes	Inspect valve timing.
		No	Inspect for cause.
12	• Verify test results. — If normal, return to diagnostic index to service any additional symptoms. — If malfunction remains, inspect related Service Bulletins and/or On-line Repair Information and perform repair or diagnosis. • If vehicle is repaired, troubleshooting completed. • If vehicle is not repaired or additional diagnostic information is not available, reprogram PCM if later calibration is available. Retest.		

NO.15 EMISSION COMPLIANCE [AJ]

E6U010318881W56

15	Emission compliance
DESCRIPTION	• Emission compliance test failed.
POSSIBLE CAUSE	• Vacuum lines leakage or blockage • Cooling system malfunction • Spark plug malfunction • Air leakage from intake manifold • Erratic or no signal from CMP sensor • Inadequate fuel pressure • PCV valve malfunction or incorrect valve installation • EGR valve malfunction • Exhaust system clogging • Fuel tank ventilation system malfunction • Charcoal canister damage • Air cleaner element clogging or restriction • Throttle body malfunction • Ignition coil or related circuit malfunction. • Improper air/fuel mixture ratio control operation • Excessive carbon built up in combustion chamber • Improper engine compression • Improper valve timing • Catalyst converter malfunction • Engine internal parts malfunction **Warning** • **The following troubleshooting flow chart contains the fuel system diagnosis and repair procedures. Read the following warnings before performing the fuel system services:** **— Fuel vapor is hazardous. It can easily ignite, causing serious injury and damage. Always keep sparks and flames away from fuel.** **— Fuel line spills and leakage are dangerous. Fuel can ignite and cause serious injuries or death and damage. Fuel can also irritate skin and eyes. To prevent this, always complete "BEFORE REPAIR PROCEDURE" and "AFTER REPAIR PROCEDURE" described in this manual.** **(See 01–14A–6 BEFORE REPAIR PROCEDURE [L3, AJ].)** **(See 01–14A–6 AFTER REPAIR PROCEDURE [L3, AJ].)** **Caution** • **Disconnecting/connecting quick release connector without cleaning it may possibly cause damage to fuel pipe and quick release connector. Always clean quick release connector joint area before disconnecting/connecting, and make sure that it is free of foreign material.**

Diagnostic procedure

STEP	INSPECTION		ACTION
1	• Inspect the following: — Vacuum lines for leakage or blockage — Electrical connections — Proper maintenance schedule followed — Intake-air system and air cleaner element concerns: obstructions, leakage or dirtiness • Are all items normal?	Yes	Go to the next step.
		No	Service as necessary. Repeat Step 1.
2	• Connect WDS or equivalent to DLC–2. • Turn ignition switch to ON position (Engine OFF). • Retrieve any DTCs. • Are there any DTCs displayed?	Yes	**DTC is displayed:** • Go to appropriate DTC test.
		No	**No DTC is displayed:** • Go to the next step.
3	• Is any other driveability concern present?	Yes	Go to appropriate symptom troubleshooting.
		No	Go to the next step.
4	• Connect WDS or equivalent to DLC–2. • Access ECT PID. • Warm up engine and run it at idle. • Verify ECT PID is correct. (See 01–40C–6 PCM INSPECTION [AJ].) • Is ECT PID correct?	Yes	Go to the next step.
		No	Inspect for coolant leakage. Inspect cooling fan and operation or thermostat operation.
5	• Perform spark test. (See 01–03C–68 Spark Test.) • Is strong blue spark visible at each cylinder?	Yes	Inspect for the following: • Spark plugs malfunction • CMP sensor is installed improperly. • Damage of trigger wheel on camshaft • Open or short circuit on CMP sensor • Open or short circuit between CMP sensor and PCM terminal 2AE, 2AD, 2AB or 2AA. Repair or replace malfunctioning part. • If normal, go to the next step.
		No	Repair or replace malfunctioning part according to spark test results.
6	• Install fuel pressure gauge between plastic fuel hose and fuel distributor. • Start engine and run it at idle. • Measure fuel line pressure at idle. (See 01–14A–7 FUEL LINE PRESSURE INSPECTION [L3, AJ].) • Is fuel line pressure correct at idle?	Yes	Go to the next step.
		No	**Zero or low:** • Inspect fuel pump relay and fuel pump circuit. • Inspect for clogged fuel line. — If normal, replace fuel pump unit. (See 01–14A–13 FUEL PUMP UNIT REMOVAL/ INSTALLATION [L3, AJ].) **High:** • Replace fuel pump unit. (See 01–14A–13 FUEL PUMP UNIT REMOVAL/ INSTALLATION [L3, AJ].)
7	• Remove and shake PCV valve. • Does PCV valve rattle?	Yes	Go to the next step.
		No	Replace PCV valve.
8	• Inspect for fuel saturation inside charcoal canister. • Is excess amount of liquid fuel present in canister?	Yes	Replace charcoal canister.
		No	Inspect fuel tank vent system. Then, go to the next step.
9	• Inspect WU–TWC. • Is WU–TWC normal?	Yes	Inspect EGR system.
		No	Replace WU–TWC.
10	• Inspect for restriction in the exhaust system. • Is there any restriction?	Yes	Inspect exhaust system.
		No	Go to the next step.
11	• Verify test results. — If normal, return to diagnostic index to service any additional symptoms. — If malfunction remains, inspect related Service Bulletins and/or On-line Repair Information and perform repair or diagnosis. • If vehicle is repaired, troubleshooting completed. • If vehicle is not repaired or additional diagnostic information is not available, reprogram PCM if later calibration is available. Retest.		

NO.16 HIGH OIL CONSUMPTION/LEAKAGE [AJ]

E6U010318881W57

16	High oil consumption/leakage
DESCRIPTION	• Oil consumption is excessive.
POSSIBLE CAUSE	• PCV valve malfunction • Improper dipstick • Improper engine oil viscosity • Engine internal part malfunction

Diagnostic procedure

STEP	INSPECTION		ACTION
1	• Remove and shake PCV valve. • Does PCV valve rattle?	Yes	Go to the next step.
		No	Replace PCV valve.
2	• Verify following: — No external leakage — Proper dipstick — Proper engine oil viscosity • Are all items normal?	Yes	Inspect internal engine parts such as valves, valve guides, valve stem seals, cylinder head drain passage, and piston rings.
		No	Service as necessary. Repeat Step 2.
3	• Verify test results. — If normal, return to diagnostic index to service any additional symptoms. — If malfunction remains, inspect related Service Bulletins and/or On-line Repair Information and perform repair or diagnosis. • If vehicle is repaired, troubleshooting completed. • If vehicle is not repaired or additional diagnostic information is not available, reprogram PCM if later calibration is available. Retest.		

NO.17 COOLING SYSTEM CONCERNS-OVERHEATING [AJ]

E6U010318881W58

17	Cooling system concerns—overheating
DESCRIPTION	• Engine runs at higher than normal temperature/overheats.
POSSIBLE CAUSE	• Improper coolant level • Blown fuses • Coolant leakage • Excessive A/C system pressure • A/C system operation is improper. • Improper water/anti-freeze mixture • Fans reverse rotation • Poor radiator condition • Thermostat malfunction • Radiator hoses damage • Condenser fan is inoperative. • Improper or damaged radiator cap • Cooling fan is inoperative. • Coolant overflow system malfunction • Improper tension of drive belt • Drive belt damage • Fan control module malfunction

Diagnostic procedure

STEP	INSPECTION		ACTION
1	• Inspect the following: — Engine coolant level — Coolant leakage — Water and anti-freeze mixture — Radiator condition — Collapsed or restricted radiator hoses — Radiator pressure cap — Overflow system — Fan rotational direction — Fuses • Are all items normal?	Yes	Go to the next step.
		No	Service as necessary. Repeat Step 1.
2	• Connect WDS or equivalent to DLC–2. • Turn ignition switch to ON position (Engine OFF). • Retrieve any DTCs. • Are there any DTCs displayed?	Yes	**DTC is displayed:** • Go to appropriate DTC test.
		No	**No DTC is displayed:** • Go to the next step.

STEP	INSPECTION		ACTION
3	• Start engine and run it at idle speed. • Turn A/C switch on. • Does A/C compressor engage?	Yes	Go to step 5.
		No	Inspect the following and repair or replace as necessary: • Refrigerant charging amount • Open circuit between A/C relay and PCM terminal 1AW • Seized A/C magnetic clutch • A/C magnetic clutch malfunction — If all items are normal, Inspect the following: • Refrigerant pressure switch operation • Evaporator temperature sensor and A/C amplifier • A/C switch is stuck open. • Open or short circuit between refrigerant pressure switch and PCM terminal 1AN • Open circuit of blower motor fan switch and resistor (if blower motor does not operate)
4	• Start engine and run it at idle speed. • Turn A/C switch on and set blower fan any speed. • Do cooling fan and condenser fan operate?	Yes	Go to the next step.
		No	**Cooling fan motor does not operate:** • Inspect for following: — Cooling fan motor malfunction — Cooling fan motor GND open circuit — Open circuit between cooling fan motor and fan control module **Condenser fan motor does not operate:** • Inspect for the following: — Condenser fan motor malfunction — Condenser fan motor GND open circuit — Open circuit between condenser fan motor and fan control module **Both cooling fan and condenser fan do not operate:** • Inspect for the following: — Fan control module malfunction — Fan control module GND open circuit — Open circuit between fan control module and cooling fan relay
5	• Is drive belt normal?	Yes	Go to the next step.
		No	Replace drive belt.
6	• Is there any leakage around heater unit in passenger compartment?	Yes	Inspect and service heater for leakage.
		No	Go to the next step.
7	• Is there any leakage at coolant hoses and/or radiator?	Yes	Replace malfunctioning part.
		No	Go to the next step.
8	• Cool down engine. • Remove thermostat and inspect operation. (See 01–12A–9 THERMOSTAT REMOVAL/ INSTALLATION [L3, AJ].) (See 01–12A–10 THERMOSTAT INSPECTION [L3, AJ].) • Is thermostat normal?	Yes	Engine coolant temperature and thermostat are normal. Inspect engine block for leakage or blockage.
		No	Access ECT PID on WDS or equivalent. Inspect both ECT PID and temperature gauge readings. • If temperature gauge on instrument cluster indicates normal range but ECT PID is not same as temperature gauge reading, inspect ECT sensor. • If temperature gauge on instrument cluster indicates overheating but ECT PID is normal, inspect temperature gauge and heat gauge unit.
9	• Verify test results. — If normal, return to diagnostic index to service any additional symptoms. — If malfunction remains, inspect related Service Bulletins and/or On-line Repair Information and perform repair or diagnosis. • If vehicle is repaired, troubleshooting completed. • If vehicle is not repaired or additional diagnostic information is not available, reprogram PCM if later calibration is available. Retest.		

NO.18 COOLING SYSTEM CONCERNS-RUNS COLD [AJ]

E6U010318881W59

18	Cooling system concerns—runs cold
DESCRIPTION	• Engine takes excessive time to reach normal operating temperature.
POSSIBLE CAUSE	• Thermostat malfunction • Condenser fan system malfunction • Cooling fan system malfunction

Diagnostic procedure

STEP	INSPECTION		ACTION
1	• Is customer complaint "Lack of passenger compartment heat" only?	Yes	Inspect A/C and heater systems.
		No	Go to the next step.
2	• Does engine speed continue at fast idle?	Yes	Go to symptom troubleshooting "No.9 Fast idle/runs on".
		No	Go to the next step.
3	• Remove thermostat and inspect operation. (See 01–12A–9 THERMOSTAT REMOVAL/INSTALLATION [L3, AJ].) (See 01–12A–10 THERMOSTAT INSPECTION [L3, AJ].) • Is thermostat normal?	Yes	Go to the next step.
		No	Replace thermostat. (See 01–12A–9 THERMOSTAT REMOVAL/INSTALLATION [L3, AJ].)
4	• Inspect fan control system operation. • Does fan control system work properly?	Yes	Access ECT PID using WDS or equivalent. Inspect for both ECT PID and temperature gauge on instrument cluster readings. • If temperature gauge on instrument cluster indicates normal range but ECT PID is not same as temperature gauge reading, inspect ECT sensor. • If temperature gauge on instrument cluster indicates cold range but ECT PID is normal, inspect instrument cluster and related harnesses.
		No	Repair or replace malfunctioning part.
5	• Verify test results. — If normal, return to diagnostic index to service any additional symptoms. — If malfunction remains, inspect related Service Bulletins and/or On-line Repair Information and perform repair or diagnosis. • If vehicle is repaired, troubleshooting completed. • If vehicle is not repaired or additional diagnostic information is not available, reprogram PCM if later calibration is available. Retest.		

NO.19 EXHAUST SMOKE [AJ]

E6U010318881W60

19	Exhaust smoke
DESCRIPTION	• Blue, black, or white smoke from exhaust system
POSSIBLE CAUSE	**Blue smoke (Burning oil):** • PCV valve malfunction • Engine internal oil leakage **White smoke (Water in combustion):** • Cooling system malfunction (coolant loss) • Engine internal coolant leakage **Black smoke (Rich fuel mixture):** • Air cleaner is restricted. • Intake-air system collapsed or restricted. • Fuel return line is restricted. • Excessive fuel pressure • Improper engine compression • Injector fuel leakage • Ignition system malfunction **Warning** • **The following troubleshooting flow chart contains the fuel system diagnosis and repair procedures. Read the following warnings before performing the fuel system services:** — **Fuel vapor is hazardous. It can easily ignite, causing serious injury and damage. Always keep sparks and flames away from fuel.** — **Fuel line spills and leakage are dangerous. Fuel can ignite and cause serious injuries or death and damage. Fuel can also irritate skin and eyes. To prevent this, always complete "BEFORE REPAIR PROCEDURE" and "AFTER REPAIR PROCEDURE" described in this manual.** **(See 01–14A–6 BEFORE REPAIR PROCEDURE [L3, AJ].)** **(See 01–14A–6 AFTER REPAIR PROCEDURE [L3, AJ].)** **Caution** • **Disconnecting/connecting quick release connector without cleaning it may possibly cause damage to fuel pipe and quick release connector. Always clean quick release connector joint area before disconnecting/connecting, and make sure that it is free of foreign material.**

Diagnostic procedure

STEP	INSPECTION		ACTION
1	• What color is smoke coming from exhaust system?	Blue	Burning oil is indicated. Go to the next step.
		White	Water in combustion is indicated. Go to Step 3.
		Black	Rich fuel mixture is indicated. Go to Step 4.
2	• Remove and shake PCV valve. • Does PCV valve rattle?	Yes	Inspect for the following: • Damaged valve guide, stems or valve seals • Blocked oil drain passage in cylinder head • Piston rings are not seated, seized or worn. • Damaged cylinder bore — If other driveability symptoms are present, return to diagnostic index to service any additional symptoms.
		No	Replace PCV valve.
3	• Does cooling system hold pressure?	Yes	Inspect for the following: • Cylinder head gasket leakage • Intake manifold gasket leakage • Engine block cracks or porosity — If other driveability symptoms are present, return to diagnostic index to service any additional symptoms.
		No	Inspect for cause.
4	• Inspect for the following: — Air cleaner restriction — Collapsed or restricted intake-air system — Restricted fuel return line • Are all items normal?	Yes	Go to the next step.
		No	Service as necessary. Repeat Step 4.
5	• Connect WDS or equivalent to DLC–2. • Turn ignition switch to ON position. • Retrieve any DTC. • Are there any DTCs displayed?	Yes	**DTC displayed:** • Go to appropriate DTC test.
		No	**No DTC displayed:** • Go to the next step.
6	• Install fuel pressure gauge between fuel filter and fuel distributor. • Start engine and run it at idle. • Measure fuel line pressure at idle. (See 01–14A–7 FUEL LINE PRESSURE INSPECTION [L3, AJ].) • Is fuel line pressure correct at idle?	Yes	Go to the next step.
		No	**Zero or low:** • Inspect fuel pump relay and fuel pump circuit. • Inspect for clogged fuel line. — If normal, replace fuel pump unit. (See 01–14A–13 FUEL PUMP UNIT REMOVAL/ INSTALLATION [L3, AJ].) **High:** • Replace fuel pump unit. (See 01–14A–13 FUEL PUMP UNIT REMOVAL/ INSTALLATION [L3, AJ].)
7	• Perform spark test. (See 01–03C–68 Spark Test.) • Is strong blue spark visible at each cylinder?	Yes	Inspect spark plugs and CMP sensor. (See 01–40C–39 CAMSHAFT POSITION (CMP) SENSOR INSPECTION [AJ].)
		No	Repair or replace malfunctioning part according to results of spark test.
8	• Verify test results. — If normal, return to diagnostic index to service any additional symptoms. — If malfunction remains, inspect related Service Bulletins and/or On-line Repair Information and perform repair or diagnosis. • If vehicle is repaired, troubleshooting completed. • If vehicle is not repaired or additional diagnostic information is not available, reprogram PCM if later calibration is available. Retest.		

NO.20 FUEL ODOR (IN ENGINE COMPARTMENT) [AJ]

E6U010318881W61

20	Fuel odor (in engine compartment)
DESCRIPTION	• Gasoline fuel smell or visible leakage
POSSIBLE CAUSE	• Excessive fuel pressure • Purge solenoid valve malfunction • Fuel tank vent system blockage • Charcoal canister malfunction • Fuel leakage from fuel system **Warning** • **The following troubleshooting flow chart contains the fuel system diagnosis and repair procedures. Read the following warnings before performing the fuel system services:** **— Fuel vapor is hazardous. It can easily ignite, causing serious injury and damage. Always keep sparks and flames away from fuel.** **— Fuel line spills and leakage are dangerous. Fuel can ignite and cause serious injuries or death and damage. Fuel can also irritate skin and eyes. To prevent this, always complete "BEFORE REPAIR PROCEDURE" and "AFTER REPAIR PROCEDURE" described in this manual.** **(See 01–14A–6 BEFORE REPAIR PROCEDURE [L3, AJ].)** **(See 01–14A–6 AFTER REPAIR PROCEDURE [L3, AJ].)** **Caution** • **Disconnecting/connecting quick release connector without cleaning it may possibly cause damage to fuel pipe and quick release connector. Always clean quick release connector joint area before disconnecting/connecting, and make sure that it is free of foreign material.**

Diagnostic procedure

STEP	INSPECTION		ACTION
1	• Visually inspect for fuel leakage at fuel injector O-ring, and fuel line. • Service if necessary. • Is fuel line pressure held after ignition switch is turned to OFF position?	Yes	Go to the next step.
		No	Inspect fuel injector. (See 01–14A–32 FUEL INJECTOR INSPECTION [AJ].) • If normal, replace fuel pump unit. (See 01–14A–13 FUEL PUMP UNIT REMOVAL/ INSTALLATION [L3, AJ].)
2	• Inspect for blockage/restriction or open circuit between engine vacuum port and charcoal canister. • Inspect for blockage in fuel tank vent system. • Is fault indicated?	Yes	Replace vacuum hose.
		No	Go to the next step.
3	• Inspect purge solenoid valve. (See 01–16A–13 PURGE SOLENOID VALVE INSPECTION [L3, AJ].) • Is solenoid operating properly?	Yes	Go to the next step.
		No	Replace purge solenoid valve.
4	• Connect WDS or equivalent to DLC–2. • Turn ignition switch to ON position (Engine OFF). • Retrieve any DTCs. • Are there any DTCs displayed?	Yes	**DTC is displayed:** • Go to appropriate DTC test.
		No	**No DTC is displayed:** • Inspect charcoal canister for fuel saturation. — If excess amount of liquid fuel present, replace charcoal canister.
5	• Verify test results. — If normal, return to diagnostic index to service any additional symptoms. — If malfunction remains, inspect related Service Bulletins and/or On-line Repair Information and perform repair or diagnosis. • If vehicle is repaired, troubleshooting completed. • If vehicle is not repaired or additional diagnostic information is not available, reprogram PCM if later calibration is available. Retest.		

NO.21 ENGINE NOISE [AJ]

E6U010318881W62

21	Engine noise
DESCRIPTION	• Engine noise from under hood
POSSIBLE CAUSE	**Squeal, click or chirp noise:** • Improper engine oil level • Improper drive belt tension **Rattle sound noise:** • Loose parts **Hiss sound noise:** • Vacuum leakage • Loose spark plug • Air leakage from intake-air system • Improper VAD control system operation **Rumble or grind noise:** • Improper drive belt tension **Rap or roar sound noise:** • Exhaust system looseness **Other noise:** • Camshaft friction gear noise or HLA noise • Timing chain noise

Diagnostic procedure

STEP	INSPECTION		ACTION
1	• Is squeal, click or chirp sound present?	Yes	Inspect engine oil level or drive belts.
		No	Go to the next step.
2	• Is rumble or grind sound present?	Yes	Inspect drive belt.
		No	Go to the next step.
3	• Is rattle sound present?	Yes	Inspect location of rattle for loose parts.
		No	Go to the next step.
4	• Is hiss sound present?	Yes	Inspect for the following: • Vacuum leakage • Spark plug loose • Intake-air system leakage • VAD control system operation
		No	Go to the next step.
5	• Is rap or roar sound present?	Yes	Inspect exhaust system for loose parts.
		No	Go to the next step.
6	• Is knock sound present?	Yes	Go to symptom troubleshooting "No.13 Knocking/ pinging".
		No	If noise comes from engine internal, inspect for friction gear, timing chain or HLA noise.
7	• Verify test results. — If normal, return to diagnostic index to service any additional symptoms. — If malfunction remains, inspect related Service Bulletins and/or On-line Repair Information and perform repair or diagnosis. • If vehicle is repaired, troubleshooting completed. • If vehicle is not repaired or additional diagnostic information is not available, reprogram PCM if later calibration is available. Retest.		

NO.22 VIBRATION CONCERNS (ENGINE) [AJ]

E6U010318881W63

22	Vibration concerns (engine)
DESCRIPTION	• Vibration from under hood or driveline
POSSIBLE CAUSE	• Loose attaching bolts or worn parts • Components malfunction such as worn parts

Diagnostic procedure

STEP	INSPECTION		ACTION
1	• Inspect the following components for loose attaching bolts or worn parts: — Cooling fan — Condenser fan — Drive belt and pulleys — Engine mounts • All items normal?	Yes	Inspect the following systems: • Wheels • ATX • Driveline • Suspension
		No	Readjust or retighten engine mount installation position. Service if necessary for other parts.
2	• Verify test results. — If normal, return to diagnostic index to service any additional symptoms. — If malfunction remains, inspect related Service Bulletins and/or On-line Repair Information and perform repair or diagnosis. • If vehicle is repaired, troubleshooting completed. • If vehicle is not repaired or additional diagnostic information is not available, reprogram PCM if later calibration is available. Retest.		

NO.23 A/C DOES NOT WORK SUFFICIENTLY [AJ]

E6U010318881W64

23	A/C does not work sufficiently.
DESCRIPTION	• A/C compressor magnetic clutch does not engage when A/C switch is turned on.
POSSIBLE CAUSE	• Improper refrigerant charging amount • Open A/C magnetic clutch • Open circuit between A/C relay and A/C magnetic clutch • Poor GND of A/C magnetic clutch • Refrigerant pressure switch is stuck open. • A/C relay is stuck open. • Seized A/C compressor • Open circuit between A/C switch and PCM through both refrigerant pressure switch and A/C amplifier

Diagnostic procedure

TEP	INSPECTION		ACTION
1	• Connect WDS or equivalent to DLC–2. • Turn ignition switch to ON position (Engine OFF). • Retrieve any DTCs. • Are there any DTCs displayed?	Yes	**DTC is displayed:** • Go to appropriate DTC test.
		No	**No DTC is displayed:** • Go to the next step.
2	• Disconnect A/C compressor connector. • Start engine and turn A/C switch on. • Is there correct voltage at terminal of A/C magnetic clutch connector? **Specification** **More than 10.5 V**	Yes	Inspect for GND condition of magnetic clutch on A/C compressor. • If GND condition is normal, inspect for open circuit of magnetic clutch coil.
		No	Go to the next step.
3	• Disconnect refrigerant pressure switch connector. • Connect jumper wire between terminals B and C (high and low pressure side) of refrigerant pressure switch connector. • Start engine and run it at idle. • Turn A/C switch on and set blower fan at any speed. • Does A/C work?	Yes	Inspect refrigerant pressure switch operation. • If switch is normal, go to the next step.
		No	Inspect for the following: • A/C switch is stuck open • Open circuit between refrigerant pressure switch and PCM terminal 1AN • Open circuit of blower motor fan switch and resistor (if blower motor does not operate) • Inspect evaporator temperature sensor and A/C amplifier
4	• Remove jumper wire from switch connector. • Reconnect connector to refrigerant pressure switch. • Start engine and turn A/C switch on. • Does fan operate?	Yes	Inspect for the following: • A/C relay is stuck open. • Open circuit between A/C relay and PCM terminal 1AW
		No	Inspect for the following and repair or replace if necessary: • Refrigerant charging amount • A/C compressor for being seized
5	• Verify test results. — If normal, return to diagnostic index to service any additional symptoms. — If malfunction remains, inspect related Service Bulletins and/or On-line Repair Information and perform repair or diagnosis. • If vehicle is repaired, troubleshooting completed. • If vehicle is not repaired or additional diagnostic information is not available, reprogram PCM if later calibration is available. Retest.		

NO.24 A/C ALWAYS ON/A/C COMPRESSOR RUNS CONTINUOUSLY [AJ]

E6U010318881W65

24	A/C always ON or A/C compressor runs continuously
DESCRIPTION	• A/C compressor magnetic clutch does not disengage.
POSSIBLE CAUSE	• Stuck engagement A/C compressor magnetic clutch • A/C relay is stuck closed. • Short to GND between A/C switch and PCM • Short to GND circuit between A/C relay and PCM • A/C relay to magnetic clutch circuit shorts to battery power.

Diagnostic procedure

STEP	INSPECTION		ACTION
1	• Connect WDS or equivalent to DLC–2. • Turn ignition switch to ON position (Engine OFF). • Retrieve any DTCs. • Are there any DTCs displayed?	Yes	**DTC is displayed:** • Go to appropriate DTC test.
		No	**No DTC is displayed:** • Go to the next step.
2	• Start engine and run it at idle. • Turn A/C switch on. • Remove A/C relay. • Does A/C magnetic clutch disengage?	Yes	Inspect for the following: • A/C relay is stuck closed. • Short to GND circuit between A/C relay and PCM terminal 1U — If both items are normal, go to the next step.
		No	Inspect if circuit between A/C relay and magnetic clutch shorts to battery power circuit. • If circuit is normal, inspect magnetic clutch stuck engagement or clearance.
3	• Disconnect refrigerant pressure switch connector. • Start the engine and A/C switch on. **Note** • A/C should not work when the connector disconnected. If A/C remains working, short to GND circuit may be present. • Does A/C remain working?	Yes	Inspect for short to GND circuit between refrigerant pressure switch and PCM terminal 1AN.
		No	Go to the next step.
4	• Reconnect refrigerant pressure switch connector. • Turn off A/C switch. **Note** • A/C should not work when the A/C switch is turned off. If A/C remains on, short to GND circuit may be present. • Does ACSW PID reading remain on?	Yes	Inspect for the following: • Short to GND circuit between A/C switch and A/C amplifier • Short to GND circuit between A/C amplifier and refrigerant pressure switch
		No	Inspect for stuck closed A/C switch.
5	• Verify test results. — If normal, return to diagnostic index to service any additional symptoms. — If malfunction remains, inspect related Service Bulletins and/or On-line Repair Information and perform repair or diagnosis. • If vehicle is repaired, troubleshooting completed. • If vehicle is not repaired or additional diagnostic information is not available, reprogram PCM if later calibration is available. Retest.		

NO.25 A/C DOES NOT CUT OFF UNDER WIDE OPEN THROTTLE CONDITIONS [AJ]

E6U010318881W66

25	A/C does not cut off under wide open throttle conditions.
DESCRIPTION	• A/C compressor magnetic clutch does not disengage under wide open throttle.
POSSIBLE CAUSE	• Accelerator position sensor malfunction • Accelerator position sensor misadjustment • Loosely installed accelerator position sensor

Diagnostic procedure

STEP	INSPECTION		ACTION
1	• Does A/C compressor disengage when A/C switch is turned off?	Yes	Go to the next step.
		No	Go to symptom troubleshooting "No.24 A/C always on/ A/C compressor runs continuously".
2	• Connect WDS or equivalent to DLC–2. • Turn ignition switch to ON position (Engine OFF). • Retrieve any DTCs. • Are there any DTCs displayed?	Yes	**DTC is displayed:** • Go to appropriate DTC test.
		No	**No DTC is displayed:** • Inspect accelerator position sensor for proper adjustment.
3	• Verify test results. — If normal, return to diagnostic index to service any additional symptoms. — If malfunction remains, inspect related Service Bulletins and/or On-line Repair Information and perform repair or diagnosis. • If vehicle is repaired, troubleshooting completed. • If vehicle is not repaired or additional diagnostic information is not available, reprogram PCM if later calibration is available. Retest.		

NO.26 EXHAUST SULPHUR SMELL [AJ]

E6U010318881W67

26	Exhaust sulphur smell
DESCRIPTION	• Rotten egg smell (sulphur) from exhaust
POSSIBLE CAUSE	• Electrical connectors are disconnected or connected poorly. • Charcoal canister malfunction • Vacuum lines are disconnected or connected improperly. • Improper fuel pressure • Poor fuel quality **Warning** • **The following troubleshooting flow chart contains the fuel system diagnosis and repair procedures. Read the following warnings before performing the fuel system services:** **— Fuel vapor is hazardous. It can easily ignite, causing serious injury and damage. Always keep sparks and flames away from fuel.** **— Fuel line spills and leakage are dangerous. Fuel can ignite and cause serious injuries or death and damage. Fuel can also irritate skin and eyes. To prevent this, always complete "BEFORE REPAIR PROCEDURE" and "AFTER REPAIR PROCEDURE" described in this manual.** **(See 01–14A–6 BEFORE REPAIR PROCEDURE [L3, AJ].)** **(See 01–14A–6 AFTER REPAIR PROCEDURE [L3, AJ].)** **Caution** • **Disconnecting/connecting quick release connector without cleaning it may possibly cause damage to fuel pipe and quick release connector. Always clean quick release connector joint area before disconnecting/connecting, and make sure that it is free of foreign material.**

Diagnostic procedure

STEP	INSPECTION		ACTION
1	• Are any driveability or exhaust smoke concerns present?	Yes	Go to appropriate flow chart.
		No	Go to the next step.
2	• Inspect the following: — Electrical connections — Vacuum lines — Fuel quality • Are all items normal?	Yes	Go to the next step.
		No	Service as necessary. Repeat Step 2.
3	• Connect WDS or equivalent to DLC–2. • Turn ignition switch to ON position (Engine OFF). • Retrieve any DTC. • Are there any DTCs displayed?	Yes	**DTC is displayed:** • Go to appropriate DTC test.
		No	**No DTC is displayed:** • Go to the next step.
4	• Install fuel pressure gauge between plastic fuel hose and fuel distributor. • Start engine and run it at idle. • Inspect fuel line pressure. (See 01–14A–7 FUEL LINE PRESSURE INSPECTION [L3, AJ].) • Is fuel line pressure correct at idle?	Yes	Go to the next step.
		No	**Zero or low:** • Inspect fuel pump relay and fuel pump circuit. • Inspect for clogged fuel line. — If normal, replace fuel pump unit. (See 01–14A–13 FUEL PUMP UNIT REMOVAL/ INSTALLATION [L3, AJ].) **High:** • Replace fuel pump unit. (See 01–14A–13 FUEL PUMP UNIT REMOVAL/ INSTALLATION [L3, AJ].)
5	• Inspect charcoal canister for fuel saturation. • Is excess amount of liquid fuel present in canister?	Yes	Replace charcoal canister.
		No	Inspect fuel tank vent system. • If fuel tank vent system is normal, since sulfur content can vary in different fuels, try a different brand. • If fuel tank vent system is not normal, repair or replace malfunctioning part.
6	• Verify test results. — If normal, return to diagnostic index to service any additional symptoms. — If malfunction remains, inspect related Service Bulletins and/or On-line Repair Information and perform repair or diagnosis. • If vehicle is repaired, troubleshooting completed. • If vehicle is not repaired or additional diagnostic information is not available, reprogram PCM if later calibration is available. Retest.		

NO.27 FUEL REFILL CONCERNS [AJ]

E6U010318881W68

27	Fuel refill concerns
DESCRIPTION	• Fuel tank does not fill smoothly.
POSSIBLE CAUSE	• Clogged EVAP pipes • Nonreturn valve malfunction • Improper use of fuel nozzle • Inadequate fuel filling speed **Warning** • **The following troubleshooting flow chart contains the fuel system diagnosis and repair procedures. Read the following warnings before performing the fuel system services:** **— Fuel vapor is hazardous. It can easily ignite, causing serious injury and damage. Always keep sparks and flames away from fuel.** **— Fuel line spills and leakage are dangerous. Fuel can ignite and cause serious injuries or death and damage. Fuel can also irritate skin and eyes. To prevent this, always complete "BEFORE REPAIR PROCEDURE" and "AFTER REPAIR PROCEDURE" described in this manual.** **(See 01–14A–6 BEFORE REPAIR PROCEDURE [L3, AJ].)** **(See 01–14A–6 AFTER REPAIR PROCEDURE [L3, AJ].)** **Caution** • **Disconnecting/connecting quick release connector without cleaning it may possibly cause damage to fuel pipe and quick release connector. Always clean quick release connector joint area before disconnecting/connecting, and make sure that it is free of foreign material.**

Diagnostic procedure

STEP	INSPECTION		ACTION
1	• Connect WDS or equivalent to DLC-2 • Turn ignition switch to ON position (Engine OFF). • Retrieve DTCs. • Are there any DTCs displayed?	Yes	**DTC is displayed:** • Go to appropriate DTC test.
		No	**No DTC is displayed:** • Go to the next step.
2	• Remove fuel-filler pipe. • Make sure nonreturn valve is installed properly. • Inspect nonreturn valve operation. • Is nonreturn valve normal?	Yes	Inspect for the following: • Improper use of fuel nozzle • Inadequate fuel filling speed
		No	**Nonreturn valve is installed improperly:** • Reinstall nonreturn valve to proper position. **Nonreturn valve does not operate properly:** • Replace nonreturn valve.
3	• Verify test results. — If normal, return to diagnostic index to service any additional symptoms. — If malfunction remains, inspect related Service Bulletins and/or On-line Repair Information and perform repair or diagnosis. • If vehicle is repaired, troubleshooting completed. • If vehicle is not repaired or additional diagnostic information is not available, reprogram PCM if later calibration is available. Retest.		

NO.28 FUEL FILLING SHUT OFF ISSUES [AJ]

E6U010318881W69

28	Fuel filling shut off issues
DESCRIPTION	• Fuel does not shut off properly.
POSSIBLE CAUSE	• Clogged EVAP pipes • Nonreturn valve malfunction • Fuel shut-off valve malfunction • Fuel nozzle malfunction • Fuel nozzle is not inserted correctly. **Warning** • **The following troubleshooting flow chart contains the fuel system diagnosis and repair procedures. Read the following warnings before performing the fuel system services:** **— Fuel vapor is hazardous. It can easily ignite, causing serious injury and damage. Always keep sparks and flames away from fuel.** **— Fuel line spills and leakage are dangerous. Fuel can ignite and cause serious injuries or death and damage. Fuel can also irritate skin and eyes. To prevent this, always complete "BEFORE REPAIR PROCEDURE" and "AFTER REPAIR PROCEDURE" described in this manual.** **(See 01–14A–6 BEFORE REPAIR PROCEDURE [L3, AJ].)** **(See 01–14A–6 AFTER REPAIR PROCEDURE [L3, AJ].)** **Caution** • **Disconnecting/connecting quick release connector without cleaning it may possibly cause damage to fuel pipe and quick release connector. Always clean quick release connector joint area before disconnecting/connecting, and make sure that it is free of foreign material.**

Diagnostic procedure

STEP	INSPECTION		ACTION
1	• Connect WDS or equivalent to DLC-2. • Turn ignition switch to ON position (Engine OFF). • Retrieve any DTCs. • Are there any DTCs displayed?	Yes	**DTC is displayed:** • Go to appropriate DTC test.
		No	**No DTC displayed:** • Go to the next step.
2	• Remove fuel-filler pipe. • Make sure nonreturn valve is installed properly. • Inspect nonreturn valve operation. • Is nonreturn valve normal?	Yes	Inspect for the following: • Improper use of fuel nozzle • Fuel-filler pipe is not inserted correctly. • Inspect fuel shut-off valve.
		No	**Nonreturn valve is installed improperly:** • Reinstall nonreturn valve to proper position. **Nonreturn valve does not operate properly:** • Replace nonreturn valve.
3	• Verify test results. — If normal, return to diagnostic index to service any additional symptoms. — If malfunction remains, inspect related Service Bulletins and/or On-line Repair Information and perform repair or diagnosis. • If vehicle is repaired, troubleshooting completed. • If vehicle is not repaired or additional diagnostic information is not available, reprogram PCM if later calibration is available. Retest.		

NO.29 SPARK PLUG CONDITION [AJ]

E6U010318881W70

29	Spark plug condition
DESCRIPTION	• Incorrect spark plug condition
POSSIBLE CAUSE	**Note** • Inspecting spark plugs condition can determine whether problem is related to a specific cylinder or to all cylinders. **Wet/carbon is stuck on specific plug:** • Spark—Weak, not visible • Air/fuel mixture—Excessive fuel injection volume • Compression—No compression, low compression • Faulty spark plug **Grayish white with specific plug:** • Air/fuel mixture—Insufficient fuel injection volume • Faulty spark plug **Wet/carbon stuck on all plugs:** • Spark—Weak • Air/fuel mixture—Too rich • Compression—Low compression • Clogging in intake/exhaust system **Grayish white with all plugs:** • Air/fuel mixture—Too lean **Warning** • **The following troubleshooting flow chart contains the fuel system diagnosis and repair procedures. Read the following warnings before performing the fuel system services:** **— Fuel vapor is hazardous. It can easily ignite, causing serious injury and damage. Always keep sparks and flames away from fuel.** **— Fuel line spills and leakage are dangerous. Fuel can ignite and cause serious injuries or death and damage. Fuel can also irritate skin and eyes. To prevent this, always complete "BEFORE REPAIR PROCEDURE" and "AFTER REPAIR PROCEDURE" described in this manual.** **(See 01–14A–6 BEFORE REPAIR PROCEDURE [L3, AJ].)** **(See 01–14A–6 AFTER REPAIR PROCEDURE [L3, AJ].)** **Caution** • **Disconnecting/connecting quick release connector without cleaning it may possibly cause damage to fuel pipe and quick release connector. Always clean quick release connector joint area before disconnecting/connecting, and make sure that it is free of foreign material.**

Diagnostic procedure

STEP	INSPECTION		ACTION
1	• Remove all spark plugs. • Inspect spark plug condition. • Is spark plug condition normal?	Yes	Troubleshooting completed.
		No	**Specific plug is wet or covered with carbon:** • Go to the next step. **Specific plug looks grayish white:** • Go to Step 7. **All plugs are wet or covered with carbon:** • Go to Step 9. **All plugs look grayish white:** • Go to Step 15.
2	• Is spark plug wet/covered with carbon by engine oil?	Yes	Working up and down inspect all areas related to oil.
		No	Go to the next step.
3	• Inspect spark plug for the following: — Cracked insulator — Heat range — Air gap — Worn electrode • Is spark plug normal?	Yes	Go to the next step.
		No	Replace spark plug.
4	• Inspect compression pressure at suspected faulty cylinder. • Is engine compression correct? (See 01–10C–6 COMPRESSION INSPECTION [AJ].)	Yes	Go to the next step.
		No	Repair or replace malfunctioning part.

STEP	INSPECTION		ACTION
5	• Install all spark plugs. • Perform spark test at suspected faulty cylinder. • Is strong blue spark visible? (Compare with normal cylinder.)	Yes	Go to the next step.
		No	Repair or replace malfunctioning parts.
6	• Install fuel pressure gauge between fuel filter and fuel distributor. • Short check connector terminal F/P to body GND using a jumper wire. (See 01–14A–6 AFTER REPAIR PROCEDURE [L3, AJ].) • Turn ignition switch to ON position (Engine OFF). • Inspect fuel line pressure. (See 01–14A–7 FUEL LINE PRESSURE INSPECTION [L3, AJ].) • Is fuel line pressure correct with ignition switch at ON position?	Yes	Inspect fuel injector for the following: • Open or short in injector • Leakage • Injection volume
		No	**Zero or low:** • Inspect fuel pump relay and fuel pump circuit. • Inspect for clogged fuel line. — If normal, replace fuel pump unit. (See 01–14A–13 FUEL PUMP UNIT REMOVAL/ INSTALLATION [L3, AJ].) **High:** • Replace fuel pump unit. (See 01–14A–13 FUEL PUMP UNIT REMOVAL/ INSTALLATION [L3, AJ].)
7	• Inspect spark plug for the following: — Heat range — Air gap • Is spark plug normal?	Yes	Go to the next step.
		No	Replace spark plug. (See 01–18A–5 SPARK PLUG INSPECTION [L3, AJ].)
8	• Remove suspected fuel injector. • Inspect for the following: — Resistance (See 01–14A–32 FUEL INJECTOR INSPECTION [AJ].) — Fuel injection volume (See 01–14A–32 FUEL INJECTOR INSPECTION [AJ].) • Are all above items normal?	Yes	Inspect for open circuit between suspected fuel injector terminals and PCM at the following terminals: • **For #1 cylinder:** 2I • **For #2 cylinder:** 2J • **For #3 cylinder:** 2K • **For #4 cylinder:** 2E • **For #5 cylinder:** 2F • **For #6 cylinder:** 2G
		No	Replace fuel injector. (See 01–14A–27 FUEL INJECTOR REMOVAL/ INSTALLATION [AJ].)
9	• Is air cleaner element free of restriction?	Yes	Go to the next step.
		No	Replace air cleaner element.
10	• Perform spark test. • Is strong blue spark visible at each cylinder?	Yes	Go to the next step.
		No	Repair or replace malfunctioning part.
11	• Install fuel pressure gauge between fuel filter and fuel distributor. • Short check connector terminal F/P to body GND using a jumper wire. (See 01–14A–6 AFTER REPAIR PROCEDURE [L3, AJ].) • Turn ignition switch to ON position (Engine OFF). • Is fuel line pressure correct with ignition switch at ON position. (See 01–14A–7 FUEL LINE PRESSURE INSPECTION [L3, AJ].)	Yes	Go to the next step.
		No	**Zero or low:** • Inspect fuel pump relay and fuel pump circuit. • Inspect for clogged fuel line. — If normal, replace fuel pump unit. (See 01–14A–13 FUEL PUMP UNIT REMOVAL/ INSTALLATION [L3, AJ].) **High:** • Replace fuel pump unit. (See 01–14A–13 FUEL PUMP UNIT REMOVAL/ INSTALLATION [L3, AJ].)
12	• Inspect the following PIDs: — ECT — O2S11 — O2S21 — MAF — O2S12 — O2S22 (See 01–40C–6 PCM INSPECTION [AJ].) • Are PIDs normal?	Yes	Go to the next step.
		No	Repair or replace malfunctioning part.
13	• Perform purge control inspection (when engine can be started). • Is purge control correct?	Yes	Go to the next step.
		No	Repair or replace malfunctioning part.

STEP	INSPECTION		ACTION
14	• Perform compression inspection. (See 01–10C–6 COMPRESSION INSPECTION [AJ].) • Is compression correct?	Yes	Inspect for clogging in exhaust system.
		No	Repair or replace malfunctioning part.
15	• When engine cannot be started, inspect intake-air system for air leakage. • When engine can be started, perform intake manifold vacuum inspection. • Is air sucked in from intake-air system?	Yes	Repair or replace malfunctioning part.
		No	Go to the next step.
16	• Install fuel pressure gauge between fuel filter and fuel distributor. • Short check connector terminal F/P to body GND using a jumper wire. (See 01–14A–6 AFTER REPAIR PROCEDURE [L3, AJ].) • Turn ignition switch to ON position (Engine OFF). • Is fuel line pressure correct with ignition switch at ON position? (See 01–14A–7 FUEL LINE PRESSURE INSPECTION [L3, AJ].)	Yes	Inspect the following PIDs: • ECT • O2S11 • O2S21 • MAF • O2S12 • O2S22 (See 01–40C–6 PCM INSPECTION [AJ].) Inspect PCM GND condition.
		No	**Zero or low:** • Inspect fuel pump relay and fuel pump related circuit. • Inspect for clogged fuel line. — If normal, replace fuel pump unit. (See 01–14A–13 FUEL PUMP UNIT REMOVAL/ INSTALLATION [L3, AJ].) **High:** • Replace fuel pump unit (See 01–14A–13 FUEL PUMP UNIT REMOVAL/ INSTALLATION [L3, AJ].)
17	• Verify test results. — If normal, return to diagnostic index to service any additional symptoms. — If malfunction remains, inspect related Service Bulletins and/or On-line Repair Information and perform repair or diagnosis. • If vehicle is repaired, troubleshooting completed. • If vehicle is not repaired or additional diagnostic information is not available, reprogram PCM if later calibration is available. Retest.		

ENGINE CONTROL SYSTEM OPERATION INSPECTION [AJ]

E6U010318881WB2

Input Signal System Investigation Procedure

1. Find an unusual signal. (See 01–03C–61 Finding unusual signals.)
2. Locate its source. (See 01–03C–61 Locating the source of unusual signals.)
3. Repair or replace the defective part.
4. Confirm that the unusual signal has been erased.

Finding unusual signals

While referring to 01–02C–6 ON-BOARD DIAGNOSTIC TEST [AJ], use the PID/DATA monitor and record function to inspect the input signal system relating to the problem.

1. Start the engine and idle the vehicle. You can assume that any signals that are out of specification by a wide margin are unusual.
2. When recreating the problem, any sudden change in monitor input signals that is not consciously created by the driver can be judged as unusual.

Locating the source of unusual signals

Caution

- **Compare the WDS or equivalent monitor voltage with the measurement voltage using the digital measurement system function. If you use another tester, misreading may occur.**
- **When measuring voltage, attach the tester GND to the GND of the PCM that is being tested, or to the engine itself. If this is not done, the measured voltage and actual voltage may differ.**
- **After connecting the pin to a waterproof coupler, confirming continuity and measuring the voltage, inspect the waterproof connector for cracks. If there are any, use sealant to fix them. Failure to do this may result in deterioration of the harness or terminal from water damage, leading to problems with the vehicle.**

Variable resistance type 1 (APP sensor, TP sensor and EGR boost sensor)

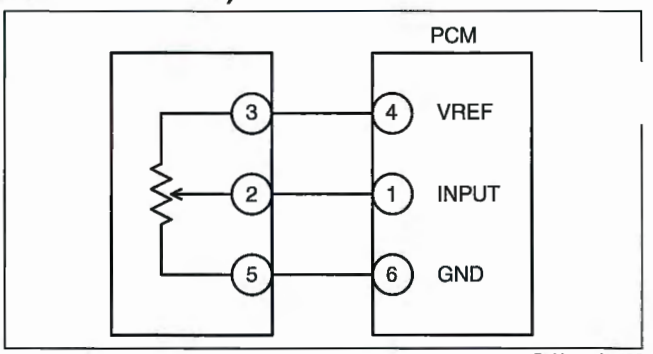

B6U0103W506

Investigate the input signal system for variable resistance type 1

1. When you get an unusual signal, measure the #1 PCM terminal voltage.
   - If the #1 terminal voltage and the WDS or equivalent monitor voltage are the same, proceed to the next step.
   - If there is a difference of **0.5 V or more**, inspect for the following points concerning the PCM connector.
     — Female terminal opening is loose.
     — Coupler (pin holder) damage
     — Pin discoloration (blackness)
     — Harness/pin crimp is loose or disconnected.
2. Measure the #2 sensor terminal voltage.
   - If there is a **0.5 V or more** difference between the sensor and WDS or equivalent voltages, inspect the harness for open or short circuits.
   - If the sensor and WDS or equivalent voltages are the same, inspect for the following points concerning the sensor connector.
   - If there are no problems, proceed to next investigation below.
     — Female terminal opening is loose.
     — Coupler (pin holder) damage
     — Pin discoloration (blackness)

Investigate the standard power supply system for variable resistance type 1

- Confirm that the #3 terminal is at **5 V**.
  — If the measured voltage on the #3 terminal is **5 V**, inspect the following points on the sensor connector.
  — If there is no problem, inspect for the following:
    - Female terminal opening loose
    - Coupler (pin holder) damage
    - Pin discoloration (blackness)
  — If the #3 terminal measures other than **5 V**, inspect for the following:
    - Open or short circuit in harness
    - Harness/pin crimp is loose or disconnected.

Investigate the GND system for variable resistance type 1

- Confirm that terminal sensor #5 is at **0 V**.
  — If it is at **0 V**, inspect the sensor.
    - If necessary, replace the sensor.
  — If not, inspect for the following:
    - Open or short circuit in harness
    - Female terminal opening is loose open or short circuit in harness
    - Coupler (pin holder) damage
    - Pin discoloration (blackness)
    - Harness/pin crimp is loose or disconnected.

Variable resistance type 2 (MAF sensor)

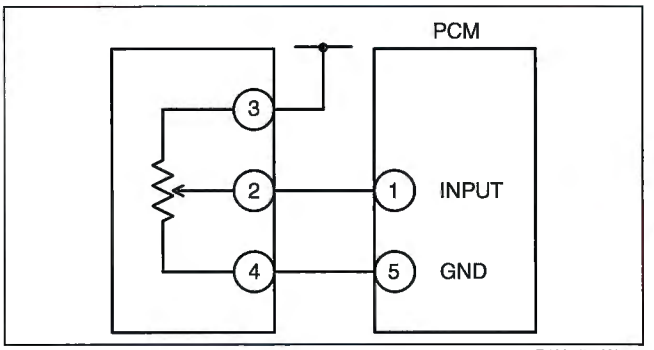

B6U0103W507

Investigate the GND system for variable resistance type 2

- Confirm that terminal sensor #4 is at **0 V**.
  - — If it is at **0 V**, inspect the sensor.
    - If necessary, replace the sensor.
  - — If not at **0 V**, inspect for the following:
    - Open circuit in harness
    - Female terminal opening is loose.
    - Coupler (pin holder) damage
    - Pin discoloration (blackness)
    - Harness/pin crimp is loose or disconnected.

Investigate the input signal system for variable resistance type 2

1. When you get an unusual signal, measure the #1 PCM terminal voltage.
   - If the #1 terminal voltage and the WDS or equivalent monitor voltage are the same, proceed to the next step.
   - If there is a difference of **0.5 V or more**, inspect for the following points concerning the PCM connector.
     - — Female terminal opening is loose.
     - — Coupler (pin holder) damage
     - — Pin discoloration (blackness)
     - — Harness/pin crimp is loose or disconnected.
2. Measure the #2 sensor terminal voltage.
   - If there is a **0.5 V or more** difference between the sensor and WDS or equivalent voltages, inspect the harness for open or short circuits.
   - If the sensor and WDS or equivalent voltages are the same, inspect the following points concerning the sensor connector.
     - — Female terminal opening is loose.
     - — Coupler (pin holder) damage
     - — Pin discoloration (blackness)
     - — Harness/pin crimp is loose or disconnected.
   - If there are no problems, proceed to next investigation below.

Investigate the electrical supply system for variable resistance type 2

- Confirm that the sensor #3 terminal is **B+**.
  - — If the measured voltage on the #3 terminal is **B+**, inspect the following points on the sensor connector.
  - — If there is no problem, inspect for the following:
    - Female terminal opening is loose.
    - Coupler (pin holder) damage
    - Pin discoloration (blackness)
  - — If the #3 terminal measures other than **B+**, inspect the following:
    - Open or short circuit in harness
    - Harness/pin crimp is loose or disconnected.

Thermistor type (IAT sensor and ECT sensor)

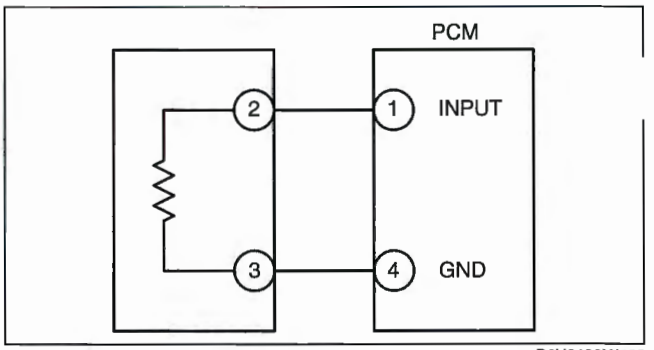

B6U0103W508

Investigate the input signal system for thermistor type

1. When you get an unusual signal, measure the #1 PCM terminal voltage.
   - If the #1 terminal voltage and the WDS or equivalent monitor voltage are the same, proceed to the next step.
   - If there is a difference of **0.5 V or more**, inspect the following points concerning the PCM connector.
     — Female terminal opening loose
     — Coupler (pin holder) damage
     — Pin discoloration (blackness)
     — Harness/pin crimp is loose or disconnected.
2. Measure the #2 sensor terminal voltage.
   - If there is a **0.5 V or more** difference between the sensor and WDS or equivalent voltages, inspect the harness for open or short circuits.
   - If the sensor and WDS or equivalent voltages are the same, inspect the following points concerning the sensor connector.
     — Female terminal opening is loose.
     — Coupler (pin holder) damage
     — Pin discoloration (blackness)
     — Harness/pin crimp is loose or disconnected.
   - If there are no problems, proceed to next investigation below.

Investigate the GND system for thermistor type

- Confirm that terminal sensor #3 is at **0 V**.
  — If it is at **0 V**, inspect the sensor. If necessary, replace the sensor.
  — If not, inspect for the following:
    - Open circuit in harness
    - Female terminal opening is loose.
    - Coupler (pin holder) damage
    - Pin discoloration (blackness)
    - Harness/pin crimp is loose or disconnected.

VSS

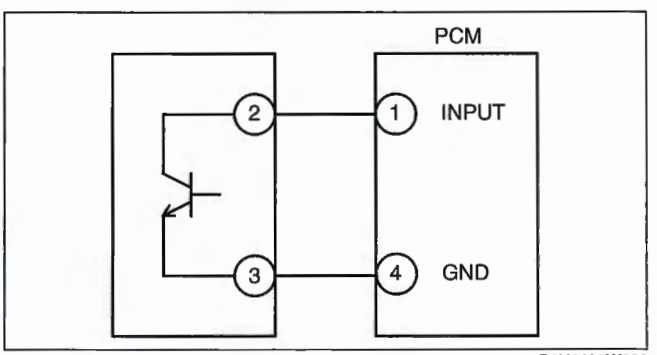

B6U0103W509

1. Measure the #1 PCM terminal voltage and confirm that it is at **0 V** or **5 V** when the ignition switch at ON position and the engine at idle.
   - If it is at **0 V** or **5 V**, intermittent concern exists. (See 01–03C–5 INTERMITTENT CONCERN TROUBLESHOOTING [AJ].)
   - If not, inspect the following points concerning the PCM connector.
   - If there is no problem, inspect for the following:
     — Female terminal opening is loose.
     — Coupler (pin holder) damage
     — Pin discoloration (blackness)
     — Harness/pin crimp is loose or disconnected.
2. Measure the #2 sensor terminal voltage and confirm that it is at **0 V** or **5 V** when the ignition switch at ON and the engine at idle.
   - If it is at **0 V** or **5 V**, intermittent concern exists. (See 01–03C–5 INTERMITTENT CONCERN TROUBLESHOOTING [AJ].)
   - If not, inspect the following points concerning the sensor connector.
   - If there is no problem, inspect for the following:
     — Female terminal opening is loose.
     — Coupler (pin holder) damage
     — Pin discoloration (blackness)
     — Harness/pin crimp is loose or disconnected.
3. Confirm that the #3 terminal switch voltage is at **0 V**.
   - If it is at **0 V**, inspect the sensor. If necessary, replace the sensor.
     — If necessary, replace the sensor.
   - If not, inspect for the following:
     — Open circuit in harness
     — Female terminal opening is loose.
     — Coupler (pin holder) damage
     — Pin discoloration (blackness)
     — Harness/pin crimp is loose or disconnected.

Main Relay Operation Inspection

Verify that the main relay clicks when the ignition switch is turned to ON position and off.

- If there is no operation sound, inspect the following:
  — Main relay (See09–21–7 RELAY INSPECTION.)
  — Harness and connector between ignition switch and main relay terminal A.
  — Harness and connector between PCM terminal 1Z and main relay terminal E.

Intake Manifold Vacuum Inspection

1. Verify air intake hoses are installed properly.
2. Start the engine and run it at idle.
3. Measure the manifold vacuum using a vacuum gauge.
   - If not as specified, inspect following:
     — Air suction at throttle body, intake manifold and PCV valve installation points
     — EGR valve (struck open)
     — Fuel injector insulator
     — Engine compression (See 01–10C–6 COMPRESSION INSPECTION [AJ].)

Specification
More than 60 kPa {450 mmHg, 18 inHg}

Note
- Air suction can be located by engine speed change when lubricant is sprayed on the area where suction occurs.

Electronic Throttle Control Inspection

Engine coolant temperature compensation inspection

1. Connect the WDS or equivalent to the DLC-2.
2. Select the PID/DATA MONITOR AND RECORD function on the WDS or equivalent display.
3. Select the following PIDs.
   - ECT
   - IAT
   - RPM
4. Verify that the engine is in cold condition, then start the engine.
5. Verify that the engine speed decreases as the engine warm-up.
   - If the engine speed does not decrease or decreases slowly, inspect the following:
     — ECT sensor and related harness (See 01–40C–29 ENGINE COOLANT TEMPERATURE (ECT) SENSOR INSPECTION [AJ].)
     — Throttle body and related harness (See 01–13C–6 THROTTLE ACTUATOR INSPECTION [AJ].) (See 01–40C–28 THROTTLE POSITION (TP) SENSOR INSPECTION [AJ].)

Load compensation inspection

1. Start the engine and run is at idle.
2. Connect the WDS or equivalent to the DLC-2.
3. Verify that P0506, P0507 or P0511 are not displayed.
   - If P0506, P0507 or P0511 are displayed, perform DTC inspection. (See 01–02C–13 DTC TABLE [AJ].)
4. Select the RPM PID.

   Note
   - Excludes temporary idle speed drop just after the loads are turned on.

5. Verify that the engine speed is within the specification under each load condition.
   - If not as specified at specific load condition, inspect the following:
     — A/C switch and related harness (See 07–40–33 CLIMATE CONTROL UNIT INSPECTION [L3, AJ].)
     — Fan switch and related harness (See 07–40–33 CLIMATE CONTROL UNIT INSPECTION [L3, AJ].)
     — PSP switch and related harness (See 01–40C–25 POWER STEERING PRESSURE (PSP) SWITCH INSPECTION [AJ].)

Idle speed

Condition	Engine speed (rpm)*1
No load	700—800
Electrical loads*2 ON	700—800
P/S ON	700—800
A/C ON	700—800

*1 : Excludes temporary idle speed drop just after the electrical loads are turned on.

*2 : Blower motor is operating at high speed. Headlight switch is turned on. Rear window defroster switch is turned on. Cooling fans are operating.

Throttle position (TP) sweep inspection

1. Connect the WDS or equivalent to the DLC-2.
2. Turn ignition switch to ON position.
3. Verify that following DTCs are not displayed:
   - P0121, P0122, P0123, P0221, P0222, P0223, P2100, P2101, P2102, P2103, P2107, P2108, P2119, P2122, P2123, P2127, P2128, P2135, P2136
     — If any DTC is displayed, perform DTC inspection. (See 01–02C–13 DTC TABLE [AJ].)
4. Access TP_REL PID.
5. Verify that the PID reading is within the CTP value. (See 01–40C–6 PCM INSPECTION [AJ].)
   - If the PID reading is out of range, perform the following:
     — Remove air duct from throttle body.
     — Verify that throttle valve moves when the accelerator pedal is depressed.
       - If the throttle valve moves, inspect the following:
     — TP sensor and related harness
       - If the throttle valve does not move, inspect the following:
     — Throttle actuator control motor and related harness
6. Gradually move the throttle valve and verify that the PID reading increases linearly.
   - If the PID reading drops momentarily, inspect the following:
     — TP sensor

7. Fully depress the accelerator pedal and verify that the PID reading is within the WOT value. (See 01–40C–6 PCM INSPECTION [AJ].)
   - If the PID reading is out of range, perform the following:
     — Remove air duct from throttle valve body.
     — Verify that the throttle valve moves when the accelerator pedal is depressed.
       - If the throttle valve moves, inspect the TP sensor and related harness.
       - If the throttle valve does not move, inspect the throttle actuator control motor and related harness.

Fuel Injector Operation Inspection

STEP	INSPECTION	RESULTS	ACTION
1	While cranking engine, inspect for fuel injector operation sound at each cylinder using a soundscope. Is operation sound heard?	Yes	Fuel injector operation is normal.
		No	**Not heard in any cylinders:** Go to the next step. **Heard in some cylinders:** Go to Step 3.
2	Perform main relay operation inspection. Is main relay operation normal?	Yes	Inspect the following: • Fuel injector power system related wiring harness and connectors • PCM connectors • Fuel injector GND and related wiring harness and connectors
		No	Repair or replace malfunctioning parts.
3	Change fuel injector connector of not operating fuel injector and operating fuel injector. Is operation sound heard?	Yes	Go to the next step.
		No	Replace fuel injector.
4	Are wiring harness and connectors of not operation fuel injector normal? (Open or short circuit)	Yes	Inspect PCM terminal voltage of fuel injector signal.
		No	Repair or replace malfunctioning parts.

Fuel Cut Control System Inspection

1. Warm-up engine and let it idle.
   Turn off the electrical loads and A/C switch.
3. Connect the WDS or equivalent to the DLC-2.
4. Select RPM PID.
5. Listen for the fuel injector operation sound at all cylinders using the soundscope and monitor PID while performing the following steps:
   (1) Depress the accelerator pedal and increase the engine speed to **4,000 rpm**.
   (2) Quickly release the accelerator pedal (brake pedal is not depressed) and verify that the fuel injector operation sound stops when the accelerator pedal is released and starts again when the engine speed drops **below 1,200 rpm**.
   - If not as specified, inspect the following:
     — ECT sensor and related harness (See 01–40C–29 ENGINE COOLANT TEMPERATURE (ECT) SENSOR INSPECTION [AJ].)
     — Neutral/clutch switch and related harness (MTX) (See 01–40C–23 CLUTCH PEDAL POSITION (CPP) SWITCH INSPECTION [AJ].)
     — TR switch and related harness (ATX) (See 05–17B–13 TRANSAXLE RANGE (TR) SWITCH INSPECTION [AW6A-EL].)

Fuel Pump Operation Inspection

Caution
- **Connecting the wrong check connector terminal may possibly cause malfunction. Carefully connect the specified terminal only.**

1. Short the check connector terminal F/P to body GND using a jumper wire. (See 01–14A–6 AFTER REPAIR PROCEDURE [L3, AJ].)
2. Remove the fuel-filler cap.
3. Turn ignition switch to ON position.
4. Verify that the fuel pump operation sound is heard.
   - If no operation sound is heard, proceed to next step.

5. Measure the voltage at harness side fuel pump connector terminal B.

Specification
B+ (Ignition switch at ON)

- If the voltage is as specified, inspect the following:
  — Fuel pump continuity
  — Fuel pump GND
  — Wiring harness between fuel pump relay and PCM terminal 1V
- If not as specified, inspect the following:
  — Fuel pump relay
  — Wiring harness connector (Main relay—fuel pump relay—fuel pump)

Fuel Pump Control System Inspection

1. Crank the engine and verify that fuel pump relay operation sound is heard.
   - If operation sound is not heard, inspect the following:
     — Fuel pump relay
     — Wiring harness and connectors (Main relay—fuel pump relay—PCM terminal 1V)
2. If operation sound is not heard, inspect the following:

Ignition Timing Control Inspection

1. Start the engine and run it at idle.
2. Warm up the engine to normal operating temperature.
3. Connect the WDS or equivalent to the DLC–2.
4. Select the PID/DATA MONITOR AND RECORD function on the WDS or equivalent display.
5. Select the SPARKADV PID.
6. Verify that SPARKADV PID is within the specification.

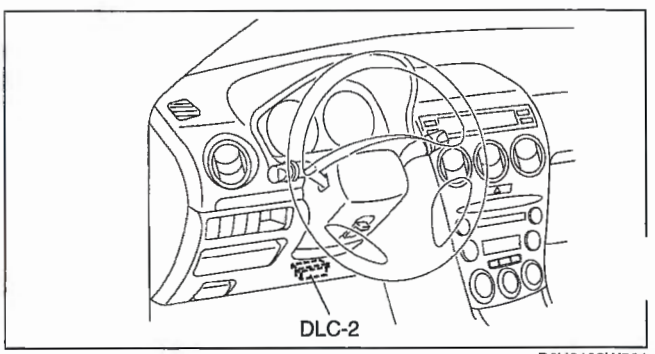

B6U0102W501

Specification
Approx. BTDC 10°

7. Increase the engine speed and verify that the SPARKADV PID value is advanced.
   - If it is not advanced, inspect the following:
     — CKP sensor and related harness (See 01–40C–41 CRANKSHAFT POSITION (CKP) SENSOR INSPECTION [AJ].)
     — MAF sensor and related harness (See 01–40C–32 MASS AIR FLOW (MAF) SENSOR INSPECTION [AJ].)
     — CMP sensors (left and right bank) and related harness (See 01–40C–39 CAMSHAFT POSITION (CMP) SENSOR INSPECTION [AJ]

Spark Test

1. Disconnect the fuel pump relay.
2. Verify that each ignition connector is connected properly.
3. Inspect the ignition system in the following procedure:

Warning

- **High voltage in the ignition system can cause strong electrical shock which can result in serious injury. Avoid direct contact to the vehicle body during the following spark test.**

STEP	INSPECTION		ACTION
1	• Disconnect ignition coil from spark plugs. • Remove spark plugs. • Reconnect spark plugs to ignition coil. • Ground spark plugs to engine. • Is strong blue spark visible at each cylinder while cranking?	Yes	Ignition system is normal.
		No	**Some cylinders do not spark:** • Go to the next step. **All cylinders do not spark:** • Go to Step 4.
2	• Inspect spark plugs for damage, wear, carbon deposits and proper plug gap. • Are spark plugs normal?	Yes	Go to the next step.
		No	Replace spark plugs, then go to Step.1.

STEP	INSPECTION		ACTION
3	• Inspect the following wiring harnesses for open or short circuit: — Ignition coil No.1 terminal B—PCM terminal 2BE — Ignition coil No.2 terminal B—PCM terminal 2BF — Ignition coil No.3 terminal B—PCM terminal 2BG — Ignition coil No.4 terminal B—PCM terminal 2BB — Ignition coil No.5 terminal B—PCM terminal 2BC — Ignition coil No.6 terminal B—PCM terminal 2BD • Are wiring harnesses normal?	Yes	Inspect and replace ignition coil. (See 01–18A–3 IGNITION COIL INSPECTION [L3, AJ].)
		No	Repair or replace malfunctioning part, then go to Step.1.
4	• Measure voltage at terminal A in each ignition coil. • Is voltage **B+**?	Yes	Go to the next step.
		No	Inspect power supply circuit of ignition coils.
5	• Do PCM connector or ignition coil connectors have poor connection?	Yes	Repair or replace connector, then go to Step.1.
		No	Go to the next step.
6	• Are the following parts normal? — CKP sensor and crankshaft pulley — PCM terminal 2Z or 2Y voltage **Specification** **Approx. 1.5 V**	Yes	Inspect for open or short in wiring harness and connector of CKP sensor.
		No	Repair or replace malfunctioning part, then go to Step.1.

EGR Control System Inspection

1. Verify that EGR valve operation (initial operation) sound is heard when the ignition switch is turned to ON position.
   - If the operation sound is not heard, connect WDS or equivalent to the DLC-2 and verify that the DTC P0403 is shown. Perform DTC inspection. (See 01–02C–13 DTC TABLE [AJ].)

   Start the engine and run it at idle.
3. Warm-up the engine to normal operating temperature.
4. Select the following PIDs:
   - ECT
   - RPM
   - SEGRP
   - APP1
   - APP2
   - TP_REL
   - VSS
5. Let the vehicle idle and verify that the SEGRP value is **0**.
6. Put the vehicle in drive.
7. Depress the accelerator pedal and verify that the SEGRP value increases.
   - If the SEGRP value does not increase, inspect the VSS, APP1, APP2, TP_REL and ECT PIDs. (See 01–40C–6 PCM INSPECTION [AJ].)
   - If the SEGRP value does increases, inspect the following:
     — EGR valve (Stuck open or close)
     — Wiring harness and connectors (Main relay—EGR valve—PCM)
8. Stop the vehicle and verify that the SEGRP value returns to **0**.

Purge Control System Inspection

1. Start the engine.
2. Disconnect the vacuum hose between the purge solenoid valve and the charcoal canister.
3. Put a finger to the purge solenoid valve and verify that there is no vacuum applied when the engine is cold.
   - If there is a vacuum, inspect the following:
     — Wiring harness and connectors (Purge solenoid valve - PCM terminal 1BF)
     — Purge solenoid valve
4. Warm-up the engine to the normal operating temperature.
   Stop the engine.
5. Connect the WDS or equivalent to the DLC-2 and verify that the DTC P0443 is displayed. Perform DTC inspection. (See 01–02C–13 DTC TABLE [AJ].)
7. Turn ignition switch to ON position.
8. Select ECT PID.

9. Verify that the engine coolant temperature is **60°C {140 °F} or above**.
   - If WDS or equivalent indicates **less than 60°C {140 °F}**, perform the ECT sensor inspection. (See 01–40C–29 ENGINE COOLANT TEMPERATURE (ECT) SENSOR INSPECTION [AJ].)
10. Set the vehicle on the dynamometer or chassis roller.

Warning

- **When the dynamometer or chassis roller is operating, there is a possibility that the operator may come into contact with or be caught up in the rotating parts, leading to serious injuries or death. When performing work while the dynamometer or chassis roller is operating, be careful not to come into contact with or be caught up in any of the rotating parts.**

11. Drive vehicle with engine speed at **approx. 2,000 rpm** for **more than 30 s**.
12. Put a finger to the purge solenoid valve and verify that there is no vacuum applied.
    - If there is no vacuum, inspect the following:
      — Wiring harness and connector (Main relay— purge solenoid valve—PCM terminal 1BF)
      — Purge solenoid valve
      — MAF, APP1, APP2, TP_REL and LOAD PIDs
    - If there is vacuum, inspect the following:
      — Vacuum hose (Purge Solenoid valve - charcoal canister)

A/C Cut-off Control System Inspection

1. Start the engine.
2. Turn the A/C switch and fan switch on.
3. Verify that the A/C compressor magnetic clutch actuates.
   - If it does not actuate, go to symptom troubleshooting "No.23 A/C does not work sufficiently".
4. Fully open the throttle valve and verify that the A/C compressor magnetic clutch does not actuate for **2—5 s**.
   - If it actuates, inspect the following:
     — A/C relay
     — Open or short to GND circuit in wiring harness and connectors (Ignition switch— A/C relay—PCM terminal 1AW)
     — A/C related parts
     — APP1, APP2 PIDs

Variable Air Duct (VAD) Control System Operation Inspection

1. Connect the WDS or equivalent to DLC-2.
2. Access ECT, TP_REL and RPM PIDs.
3. Start the engine.
4. Verify ECT PID is **70°C {158°F} or over**.
5. Inspect shutter valve operation under the following conditions:

VAD shutter valve operation

Engine speed	Above 6,000 rpm with TP_REL PID less than 60%	
	Below	Above
Shutter valve	Close	Open

- If the shutter valve operation is not as specified, inspect the following:

(1) Verify that DTC P2676 or P2677 is not displayed.
   - If DTC P2676 or P2677 is displayed, perform DTC inspection. (See 01–02C–13 DTC TABLE [AJ].)

(2) Inspect VAD control solenoid valve. (See 01–13C–5 VARIABLE AIR DUCT (VAD) CONTROL SOLENOID VALVE INSPECTION [AJ].)
   - If the VAD control solenoid valve is not normal, replace VAD control solenoid valve.
   - If the VAD control solenoid valve is normal, inspect the following:
     — Vacuum hose looseness or damage
     — Vacuum chamber crack or damage
     — Shutter valve actuator. (See 01–13C–4 VARIABLE AIR DUCT (VAD) SHUTTER VALVE INSPECTION [AJ].)
     — Shutter valve stuck open or close

Evaporative Emission (EVAP) System Leak Inspection

- To verify that the problem has been fixed properly after repairs, the run drive cycle or EVAP system leak inspection must be performed.

EVAP system leak inspection using WDS or equivalent

Note

EVAP system test outline

- The EVAP system test, which can substituted for the run drive cycle as an EVAP control system repair confirmation method, can be done while operating the WDS in the KOEO (Key On Engine Off) condition instead of actually driving the vehicle.

EVAP system test description

- The EVAP system test finds gas leaks in the system using the PCM to monitor changes in the air pump load current of the EVAP system leak detection pump. This test starts after sending an on-demand test signal from the WDS to the PCM. The PCM controls the air pump and change-over-valve operation and also stores the load current of the air pump as follows:
  i. The PCM commands turn the air pump on and retrieve the air pump load current value (LDP_MON PID) as a reference current (LDP_REF PID).
  ii. After retrieving a reference current value, the PCM commands the change-over-valve to open, then captures the air pump load current value (LDP_MON PID) as idle current (LDP_IDL PID). The EVAP system will be pressurized from this phase.
  iii. The PCM continues to monitor the air pump load current value (LDP_MON PID) until the end of the test.
- You can confirm whether any EVAP gas leak occurred or not by reading the test results.

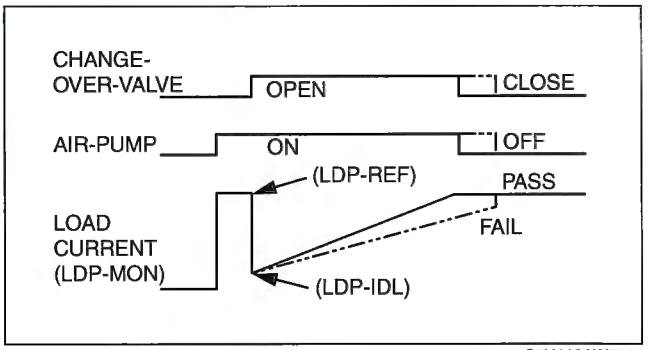

C5U116AW7001

EVAP system malfunction judgment

- The PCM calculates the stored air pump load current value and send the results to the WDS as DTCs:

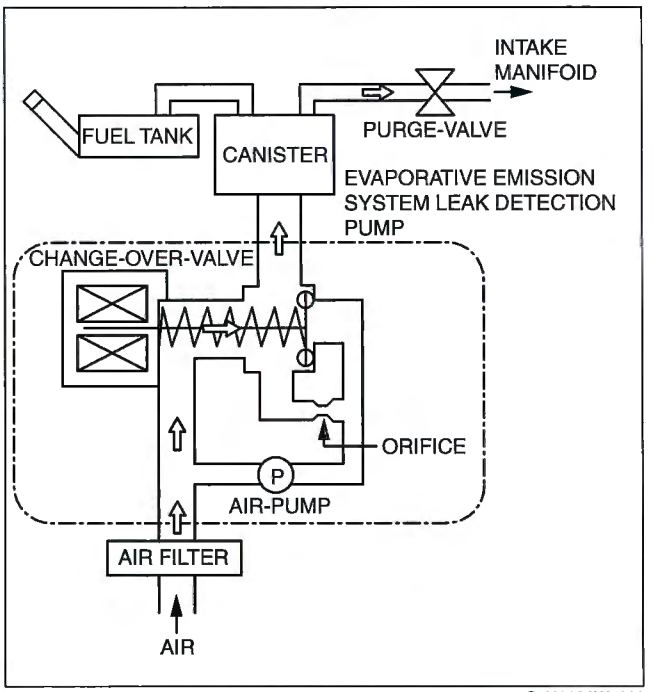

C5U116AW7002

DTC No.	Condition
P0442	EVAP control system leak detected (small leak)
P0446	Change-over valve (EVAP system leak detection pump) stuck close
P0455	EVAP control system leak detected (large leak)
P0456	EVAP control system leak detected (very small leak)
P2401	EVAP system leak detection pump control circuit low
P2402	EVAP system leak detection pump control circuit high
P2404	EVAP system leak detection pump sense circuit malfunction
P2405	EVAP system leak detection pump sense circuit low input
P2407	EVAP system leak detection pump sense circuit intermittent

Evaporative system test procedure

1. Select the EVAP system test from the Toolbox on the WDS display and follow the instructions.
2. Verify that all of the following PIDs are within the specifications at the pre-test confirmation screen.

Note

- To successfully perform this procedure, all PIDs must be within the following specifications before proceeding to the next step.
- The PCM will cancel the EVAP system test if the VPWR PID value falls lower than **11.0 V** during the test.

Specification

PID	PID Range
BARO	72.2 kPa {543 mmHg, 21.3 inHg} or more
FLI	15—85%
IAT	5—45 °C {41—113 °F}
VPWR	11.0 V or more

3. Start the engine.
4. Drive the vehicle or let the engine idle more than **20 min.**
5. Turn ignition switch off, then turn it to the ON position again (Key On Engine Off).
6. Press the tick icon to start the test.
7. Verify that no DTCs present after the completion of the test.

- If any test result is indicated with red, diagnose the problem using the following DTC troubleshooting procedure or component inspection procedure.
- If any DTCs are detected, diagnose the problem using the appropriate DTC troubleshooting procedure.

EVAP system leak inspection using leak tester

1. Perform the following **SST** (EVAP System Tester 134-01049) self-test:

Note

- If the tester does not work correctly during the self-test, refer to the tester operators manual for a more detailed self-test procedure.

(1) Verify that the control valve on the panel is in the HOLD position and open the nitrogen bottle valve.
(2) Connect the vehicle interface hose (part of the **SST**) to the SELF-TEST port located on the control panel.Hand tighten the fitting. (Do not overtighten.)
(3) Turn the control valve to the TEST position.
(4) The gauge should read **331—381 mm {13—15 in}** of water.
- If the gauge is not reading in this range, adjust the pressure by turning the black knob on the low pressure regulator at the nitrogen bottle.

(5) Turn the control valve to the HOLD position.
(6) Verify that the gauge holds pressure and that the flow meter reads no flow.
- If there is no drop in pressure and no flow, the tester passes the self-test.
- If the gauge leaks down, refer to the operators manual.

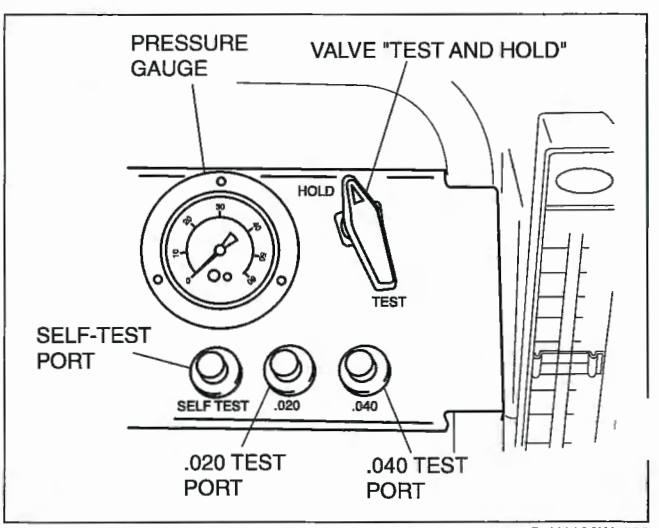

C5U116AW7003

2. Connect the **SST** to the vehicle.
   (1) Verify that the control valve on the panel is in the HOLD position and open the nitrogen bottle valve.
   (2) Remove the fuel-filler cap from the vehicle.
      • If the fuel-filler cap is not a genuine part, replace it.
   (3) Connect the receiver assembly (**SST**: 134-01059) to the vehicle cap test hose assembly (part of **SST**) and the fuel-filler cap from the vehicle.
   (4) Connect the cap adaptor (**SST**: 134-01058) to the vehicle cap test hose assembly (part of the **SST**) and to the fuel-filler neck.
   (5) Connect the vehicle interface hose (part of the **SST**) to the center fitting of the vehicle cap test hose assembly (part of the **SST**).

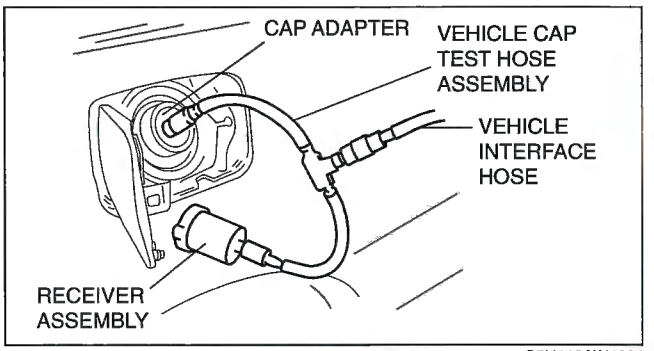

C5U116AW7004

3. Connect the WDS or equivalent to the DLC-2.
4. Turn the ignition switch to the ON position (Engine off).
5. Request the PCM on-board device control (Mode 08) using the WDS or equivalent to close the change-over valve (COV) in the EVAP system leak detection pump.

Note
- The COV is closed for **10 min** unless the following any actions are done:
  — The engine is started.
  — The ignition switch is turned off position.

6. Make sure the control valve on the 134-01049 is in the HOLD position and that the valve on the cylinder of nitrogen gas is open.
7. Turn the control valve to the open position and let the system fill. You should note a drop in the gauge pressure along with the flow meter being pegged at maximum flow for several minutes depending on how full or empty the fuel tank is, and how long it takes to completely fill and pressurize the evaporative emissions system hoses. If the gauge and the flow meter do not settle to a measurable level after **2—3 min**, then refer to the Mazda Workshop Manual to verify that the cut or vent valve is properly closed.
9. Verify the pressure gauge and flow meter reading to determine if there is an evaporative emissions leak:
   NO EVAPORATIVE LEAK:
   - The flow meter registers "zero flow" and the pressure gauge returns to the pre-set pressure of **356 mm {14 in}** of water (H2O).

   EVAPORATIVE LEAK:
   - The pressure does not return to the preset level of **356 mm {14 in}** of water (H2O) when measuring the flow. See "SETTING LEAK STANDARD FOR TESTING" (.020 to.040 inch H2O) of the Evaporative Emissions Tester operators manual (134-01067).

Note
- Turn the control valve to the HOLD position then disconnect the **SST**.

Main Fan/Additional Fan Motor Operation Inspection
1. Connect WDS or equivalent to DLC-2.
2. Warm-up the engine.
3. Access ECT PID.
4. Measure voltage fan control module connector terminal B at 2-pin connector with monitoring ECT PID.

Specification

Engine condition	A/C operation	ECT PID (°C {°F}	Voltage (V)
Ignition switch at ON or idle	Not operating	Below 95 {203}	0
Idle	Operating*		6.9—12.1
	Not operating	Above 100 {212}	0.6—14.6

* : A/C pressure switch (middle pressure) is on.

- If not as specified, inspect the following:
  — CKP sensor
  — ECT sensor
  — APP sensor
  — TP sensor
  — A/C pressure switch (middle pressure)

5. If all items are normal, replace fan control module.

Variable Valve Timing Control System Operation Inspection
When idling cannot be continued

Note
- Inspect for each bank

1. Remove the OCV and verify that the spool valve is at maximum retard position.
   - If the spool valve is stuck in advance direction, replace the OCV. (See 01–10C–41 OIL CONTROL VALVE (OCV) REMOVAL/INSTALLATION [AJ].)
2. Connect the OCV.
3. Turn the ignition switch to ON position.
4. Verify that the spool valve is at max. retard position.
   - If the spool valve is stuck in advance direction, inspect the following:
     — Short circuit in harnesses or connectors between the OCV and the PCM.
5. Inspect the variable valve timing actuator.

When idling can be continued
For right bank
1. Disconnect OCV (RH) connector.
2. Warm up the engine and it at idle.
3. Apply the battery voltage to the OCV and verify that the engine idles roughly or stalls.
   - If the engine idles roughly or stalls, inspect the timing belt component (valve timing deviation).
   - If the engine does not idle roughly or stall, go to the next step.
4. Remove the OCV (RH) and perform spool valve operation inspection. (See 01–10C–42 OIL CONTROL VALVE (OCV) INSPECTION [AJ].)
   - If not as specified, inspect the following:
     — OCV (RH)
     — Harnesses and connectors between OCV (RH) and PCM have an open or short circuit.
   - If as specified, inspect the following right bank hydraulic passages for clogging or leakage, or both.
     — Oil pressure switch - OCV
     — OCV - camshaft
     — Camshaft internal passage
5. If they are normal, replace the right bank camshaft pulley (with built-in variable valve timing actuator).

When idling can be continued
For left bank
1. Disconnect OCV (LH) connector.
2. Warm up the engine to idle.
3. Apply the battery voltage to the OCV and verify that the engine idles roughly or stalls.
   - If the engine idles roughly or stalls, inspect the timing belt component (valve timing deviation).
   - If the engine does not idle roughly or stall, go to the next step.
4. Remove the OCV (LH) and perform spool valve operation inspection. (See 01–10C–42 OIL CONTROL VALVE (OCV) INSPECTION [AJ].)
   - If not as specified, inspect the following:
     — OCV (LH)
     — Harnesses and connectors between OCV (LH) and PCM have an open or short circuit.
   - If as specified, inspect the following left bank hydraulic passages for clogging or leakage or both.
     — Oil pressure switch - OCV
     — OCV - camshaft
     — Camshaft internal passage
5. If they are normal, replace the left bank camshaft pulley (with built-in variable valve timing actuator).

01–10A MECHANICAL [L3]

MECHANICAL
LOCATION INDEX [L3] 01–10A–2
DRIVE BELT INSPECTION [L3] 01–10A–3
DRIVE BELT REPLACEMENT [L3] 01–10A–3
DRIVE BELT AUTO TENSIONER
INSPECTION [L3] 01–10A–3
PLUG HOLE PLATE
REMOVAL/INSTALLATION [L3] 01–10A–4
COMPRESSION INSPECTION [L3] 01–10A–4
VALVE CLEARANCE INSPECTION
[L3] 01–10A–5
VALVE CLEARANCE ADJUSTMENT
[L3] 01–10A–6
TIMING CHAIN
REMOVAL/INSTALLATION [L3] 01–10A–9
Crankshaft Pulley Lock Bolt
Removal Note 01–10A–12
Chain Tensioner Removal Note 01–10A–12
No.3 Engine Mount Rubber and No.3
Engine Joint Bracket
Removal Note 01–10A–12
Engine Front Cover Removal Note..... 01–10A–14
Oil Pump Sprocket Removal Note 01–10A–14
Oil Pump Sprocket
Installation Note 01–10A–14
Timing Chain Installation Note..... 01–10A–14
Engine Front Cover
Installation Note 01–10A–15
Front Oil Seal Installation Note 01–10A–16
No.3 Engine Mount Rubber and No.3
Engine Joint Bracket
Installation Note 01–10A–16
Crankshaft Pulley Lock Bolt
Installation Note 01–10A–17
Cylinder Head Cover
Installation Note 01–10A–18
CYLINDER HEAD GASKET
REPLACEMENT [L3] 01–10A–18
Camshaft Removal Note 01–10A–20
Cylinder Head Removal Note..... 01–10A–20
Cylinder Head Installation Note 01–10A–20
Camshaft Installation Note..... 01–10A–21
FRONT OIL SEAL REPLACEMENT
[L3] 01–10A–21
Crankshaft Pulley Lock Bolt
Removal Note 01–10A–22
Front Oil Seal Removal Note..... 01–10A–22
Front Oil Seal Installation Note 01–10A–23
Crankshaft Pulley Lock Bolt
Installation Note 01–10A–23
REAR OIL SEAL REPLACEMENT
[L3] 01–10A–24
Rear Oil Seal Installation Note 01–10A–24
ENGINE REMOVAL/INSTALLATION
[L3] 01–10A–25
No.1 Engine Mount Rubber
Removal Note 01–10A–27
No.4 Engine Mount Bracket and No.4
Engine Mount Rubber
Removal Note 01–10A–27
No.3 Engine Joint Bracket
Installation Note 01–10A–28
No.4 Engine Mount Bracket and No.4
Engine Mount Rubber
Installation Note 01–10A–28
No.1 Engine Mount Bracket
Installation Note 01–10A–28
No.1 Engine Mount Rubber
Installation Note 01–10A–29
ENGINE DISASSEMBLY/ASSEMBLY
[L3] 01–10A–29
ENGINE TUNE-UP [L3] 01–10A–29
Engine Tune-up Preparation 01–10A–29
Ignition Timing Inspection 01–10A–29
Idle Speed Inspection 01–10A–30
Idle Mixture Inspection 01–10A–30
VARIABLE VALVE TIMING ACTUATOR
INSPECTION [L3]..... 01–10A–30
VARIABLE VALVE TIMING ACTUATOR
REMOVAL/INSTALLATION [L3] 01–10A–31
OIL CONTROL VALVE (OCV)
REMOVAL/INSTALLATION [L3] 01–10A–31
OIL CONTROL VALVE (OCV)
INSPECTION [L3]..... 01–10A–32
Coil Resistance Inspection 01–10A–32
Spool Valve Operation Inspection..... 01–10A–32

MECHANICAL LOCATION INDEX [L3]

E6U011002000W06

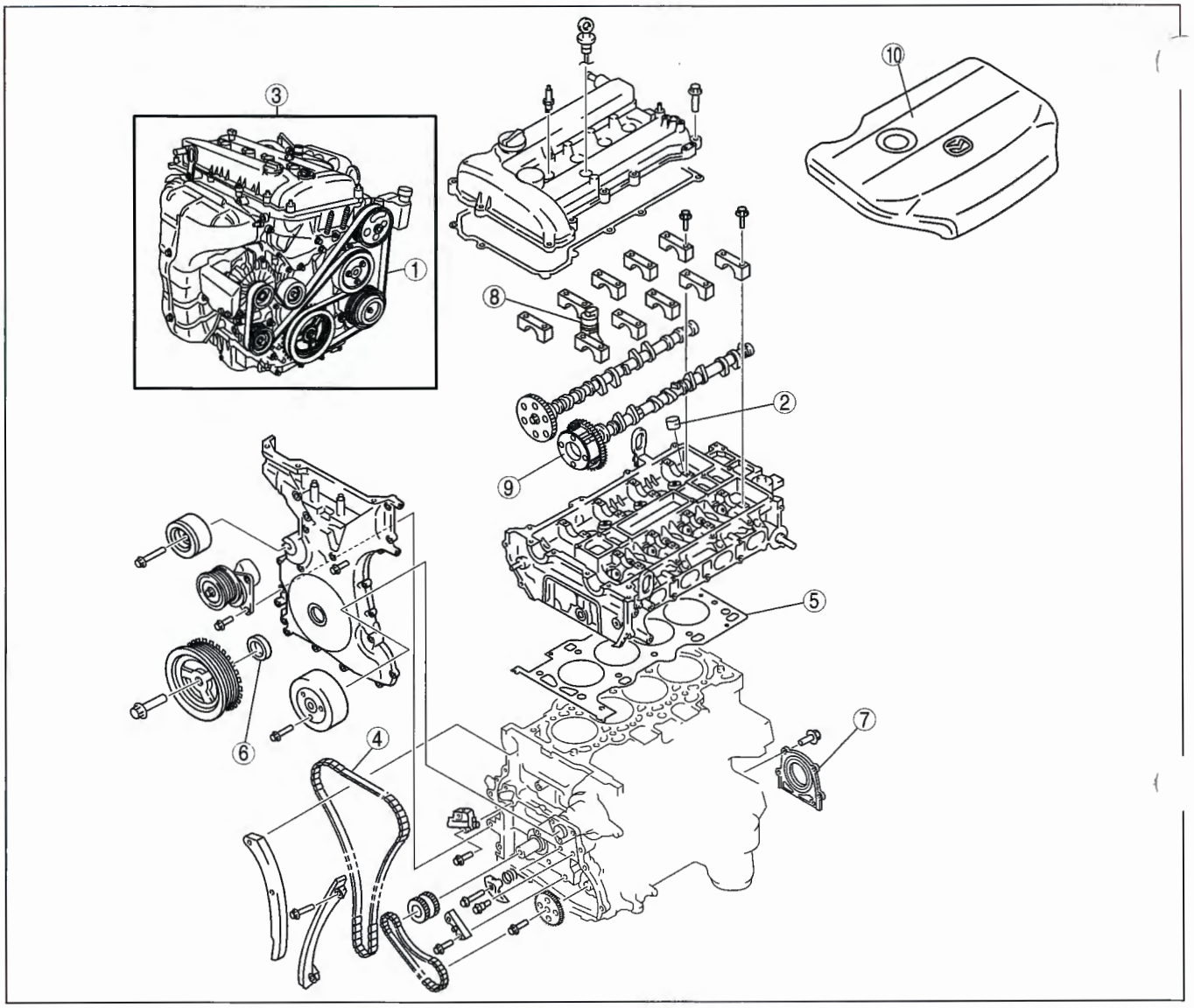

E6U110AW6001

1	Drive belt (See 01–10A–3 DRIVE BELT INSPECTION [L3]) (See 01–10A–3 DRIVE BELT REPLACEMENT [L3]) (See 01–10A–3 DRIVE BELT AUTO TENSIONER INSPECTION [L3])
2	Tappet (See 01–10A–5 VALVE CLEARANCE INSPECTION [L3]) (See 01–10A–6 VALVE CLEARANCE ADJUSTMENT [L3])
3	Engine (See 01–10A–4 COMPRESSION INSPECTION [L3]) (See 01–10A–25 ENGINE REMOVAL/ INSTALLATION [L3]) (See 01–10A–29 ENGINE DISASSEMBLY/ ASSEMBLY [L3])
4	Timing chain (See 01–10A–9 TIMING CHAIN REMOVAL/ INSTALLATION [L3])
5	Cylinder head gasket (See 01–10A–18 CYLINDER HEAD GASKET REPLACEMENT [L3])
6	Front oil seal (See 01–10A–21 FRONT OIL SEAL REPLACEMENT [L3])
7	Rear oil seal (See 01–10A–24 REAR OIL SEAL REPLACEMENT [L3])
8	Oil control valve (OCV) (See 01–10A–31 OIL CONTROL VALVE (OCV) REMOVAL/INSTALLATION [L3]) (See 01–10A–32 OIL CONTROL VALVE (OCV) INSPECTION [L3])
9	Variable valve timing actuator (See 01–10A–31 VARIABLE VALVE TIMING ACTUATOR REMOVAL/INSTALLATION [L3]) (See 01–10A–30 VARIABLE VALVE TIMING ACTUATOR INSPECTION [L3])
10	Plug hole plate (See 01–10A–4 PLUG HOLE PLATE REMOVAL/ INSTALLATION [L3])

DRIVE BELT INSPECTION [L3]

E6U011015800W03

Note
- Drive belt deflection/tension inspection is not necessary because of the use of the front drive belt auto tensioner.

1. Verify that the drive belt auto tensioner indicator mark does not exceed the limit.
   - If it exceeds the limit, replace the drive belt. (See 01–10A–3 DRIVE BELT REPLACEMENT [L3].)

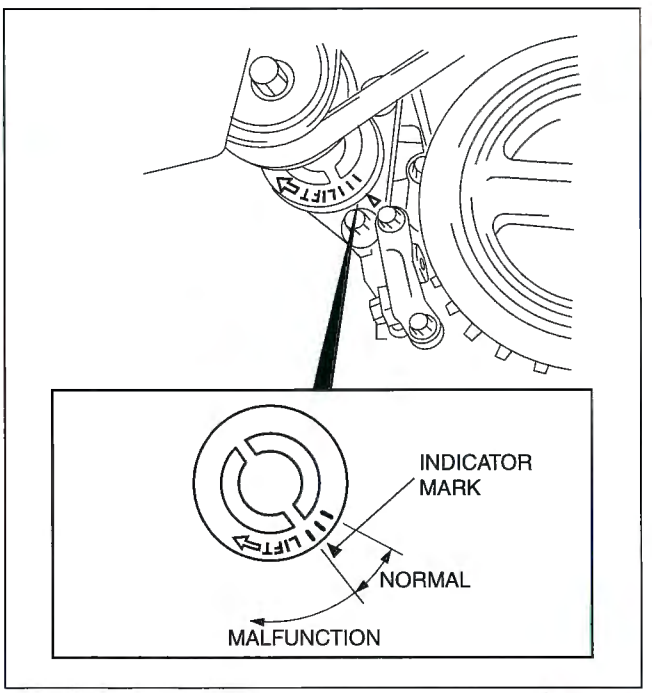

D6E110AW3006

DRIVE BELT REPLACEMENT [L3]

E6U011015800W04

1. Remove the splash shield (RH).
2. Turn the center of the tensioner pulley clockwise to release tension to the drive belt.
3. Remove the drive belt.
4. Reinstall the drive belt or install a new drive belt.
5. Verify that the drive belt auto tensioner indicator mark does not exceed the limit. (See 01–10A–3 DRIVE BELT INSPECTION [L3].)
   - If it exceeds the limit, replace the drive belt.
6. Install the splash shield (RH).

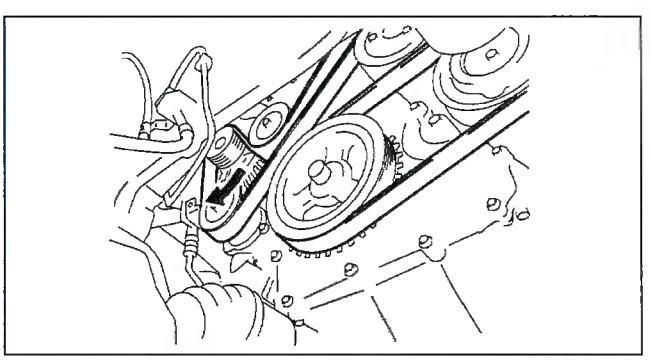

AME2210W002

DRIVE BELT AUTO TENSIONER INSPECTION [L3]

E6U011015980W02

1. Remove the drive belt. (See 01–10A–3 DRIVE BELT REPLACEMENT [L3].)
2. Verify that the drive belt auto tensioner moves smoothly in the operational direction.
   - Replace the drive belt auto tensioner if necessary.
3. Turn the drive belt auto tensioner pulley by hand and verify that it rotates smoothly.
   - Replace the drive belt auto tensioner if necessary.
4. Install the drive belt. (See 01–10A–3 DRIVE BELT REPLACEMENT [L3].)

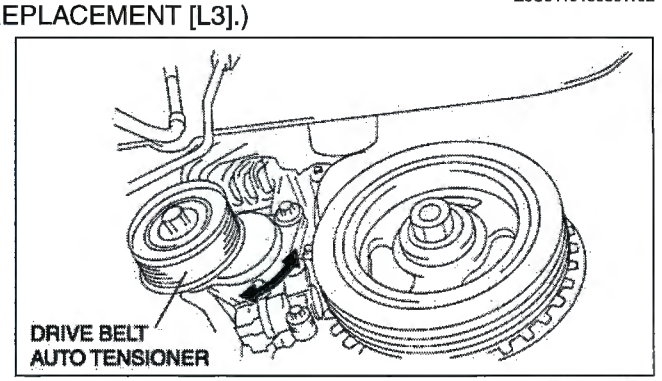

AME2210W003

PLUG HOLE PLATE REMOVAL/INSTALLATION [L3]

E6U011010291W01

1. Remove the plug hole plate.

Note
- Lift off and remove the plug hole plate from the installation areas (rubber and clips) as shown in the figure.

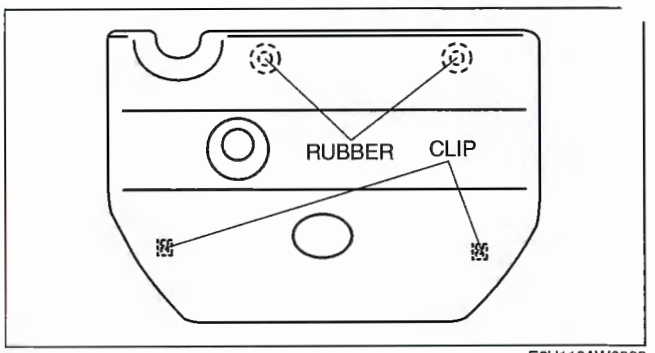

E6U110AW6002

2. Install the plug hole plate.

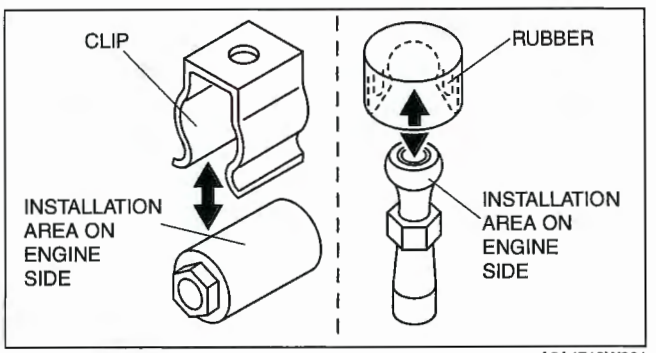

A6A4712W301

COMPRESSION INSPECTION [L3]

E6U011002000W07

Warning
- **Hot engines and oil can cause severe burns. Be careful not to burn yourself during removal/ installation of each component.**

1. Verify that the battery is fully charged.
   - Recharge it if necessary. (See 01–17A–2 BATTERY INSPECTION [L3, AJ].)
2. Warm up the engine to the normal operating temperature.
3. Stop the engine and allow it to cool down for **about 10 min.**
4. Perform "Fuel Line Safety Procedures". Leave the fuel pump relay removed. (See 01–14A–6 BEFORE REPAIR PROCEDURE [L3, AJ].)

Warning
- **Fuel vapor is hazardous. It can very easily ignite, causing serious injury and damage. Always keep sparks and flames away from fuel.**
- **Fuel line spills and leakage are dangerous. Fuel can ignite and cause serious injuries or death and damage. Fuel can also irritate skin and eyes. To prevent this, always complete the "Fuel Line Safety Procedure". (See 01–14A–6 Fuel Line Safety Procedure.)**

5. Remove the plug hole plate.
   (See 01–10A–4 PLUG HOLE PLATE REMOVAL/INSTALLATION [L3].)
6. Disconnect the ignition coil connector.
7. Remove the spark plugs. (See 01–18A–4 SPARK PLUG REMOVAL/INSTALLATION [L3, AJ].)
8. Connect a compression gauge into the spark plug hole.
9. Fully depress the accelerator pedal and crank the engine.
10. Note down the maximum gauge reading.

11. Inspect each cylinder as above.
    - If the measured value is less than the limited value, or there is a cylinder whose compression value varies from that of other cylinders by **196.1 kPa {2.0 kgf/cm^2, 28.5 psi} or more**, add a small amount of engine oil through the spark plug hole. Then measure the compression pressure and perform the respective operations for the following cases.
      — If the compression increases, the piston, the piston rings, or cylinder wall may be worn and overhaul is required.
      — If the compression stays low, a valve may be stuck or improperly seated and overhaul is required.
      — If the compression in adjacent cylinders stays low, the cylinder head gasket may be damaged or the cylinder head distorted and overhaul is required.

Compression

kPa {kgf/cm^2, psi} [rpm]

Item	Specification
Standard	1,372 {14.0, 199.08} [285]
Minimum	960 {9.79, 139.21} [285]
Maximum difference between cylinders	196.1 {2.0, 28.5}

12. Disconnect the compression gauge.
13. Install the spark plugs. (See 01–18A–4 SPARK PLUG REMOVAL/INSTALLATION [L3, AJ].)
14. Connect the ignition coil connector.
15. Install the plug hole plate.
    (See 01–10A–4 PLUG HOLE PLATE REMOVAL/INSTALLATION [L3].)
16. Install the fuel pump relay. (See 01–14A–6 BEFORE REPAIR PROCEDURE [L3, AJ].)

VALVE CLEARANCE INSPECTION [L3]

E6U011002000W08

1. Disconnect the negative battery cable.
2. Remove the tire (RH).
3. Remove the splash shield (RH).
4. Remove the plug hole plate.
   (See 01–10A–4 PLUG HOLE PLATE REMOVAL/INSTALLATION [L3].)
   Remove the spark plugs. (See 01–18A–4 SPARK PLUG REMOVAL/INSTALLATION [L3, AJ].)
6. Remove the oil control valve (OCV) connector.
7. Remove the ventilation hose.
8. Remove the cylinder head cover.
9. Verify that the engine is in cold condition.
10. Measure the valve clearance.
    (1) Turn the crankshaft clockwise so that the No.1 piston is at TDC of the compression stroke.
    (2) Measure the valve clearance at A in the figure.
        - If the valve clearance is out of the standard value, adjust it. (See 01–10A–6 VALVE CLEARANCE ADJUSTMENT [L3].)

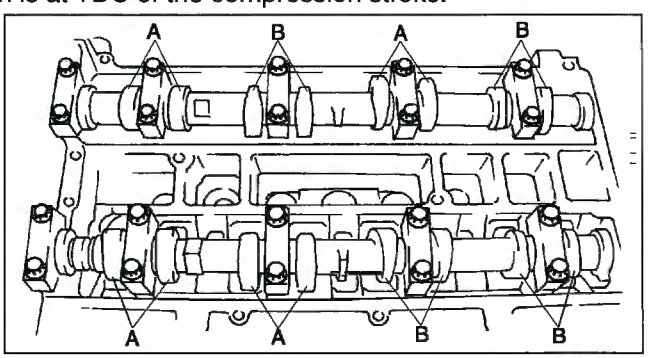

C6U110AW7001

Note
- Make sure to note down the measured values for choosing the suitable replacement tappets.

Standard [Engine cold]
IN: 0.22—0.28 mm {0.0087—0.0110 in}
EX: 0.27—0.33 mm {0.0107—0.0129 in}

(3) Rotate the crankshaft **360°** clockwise so that the No.4 piston is at TDC of the compression stroke.
(4) Measure the valve clearance at B in the figure.
- If the valve clearance is out of the standard value, adjust it. (See 01–10A–6 VALVE CLEARANCE ADJUSTMENT [L3].)

Note
- Make sure to note down the measured values for choosing the suitable replacement tappets.

Standard [Engine cold]
IN: 0.22—0.28 mm {0.0087—0.0110 in}
EX: 0.27—0.33 mm {0.0107—0.0129 in}

11. Install the cylinder head cover. (See 01–10A–18 Cylinder Head Cover Installation Note.)
12. Install the ventilation hose.
13. Install the oil control valve (OCV) connector.
14. Install the spark plugs. (See 01–18A–4 SPARK PLUG REMOVAL/INSTALLATION [L3, AJ].)
15. Install the plug hole plate.
    (See 01–10A–4 PLUG HOLE PLATE REMOVAL/INSTALLATION [L3].)
16. Install the splash shield (RH).
17. Install the tire (RH).

VALVE CLEARANCE ADJUSTMENT [L3]

E6U011002000W09

1. Disconnect the negative battery cable.
2. Remove the tire (RH).
3. Remove the splash shield (RH).
4. Remove the plug hole plate.
   (See 01–10A–4 PLUG HOLE PLATE REMOVAL/INSTALLATION [L3].)
5. Remove the spark plugs. (See 01–18A–4 SPARK PLUG REMOVAL/INSTALLATION [L3, AJ].)
6. Remove the oil control valve (OCV) connector.
7. Remove the ventilation hose.
8. Remove the cylinder head cover.
9. Remove the drive belt. (See 01–10A–3 DRIVE BELT REPLACEMENT [L3].)
10. Remove the front drive shaft (RH) from the joint shaft. (See 03–13–16 FRONT DRIVE SHAFT REMOVAL/ INSTALLATION [L3, L3 WITH TC].)
11. Remove the engine front cover lower blind plug.

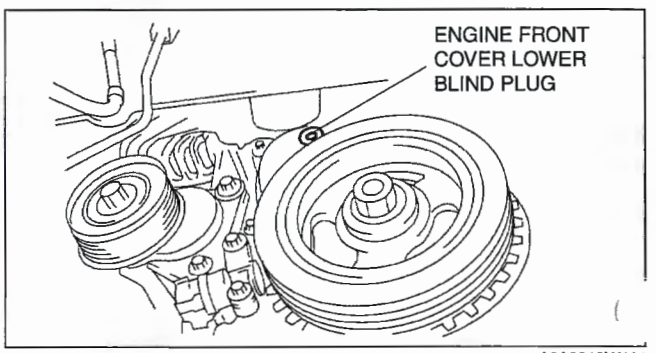

A6A2212W101

12. Remove the engine front cover upper blind plug.
13. Remove the cylinder block lower blind plug.

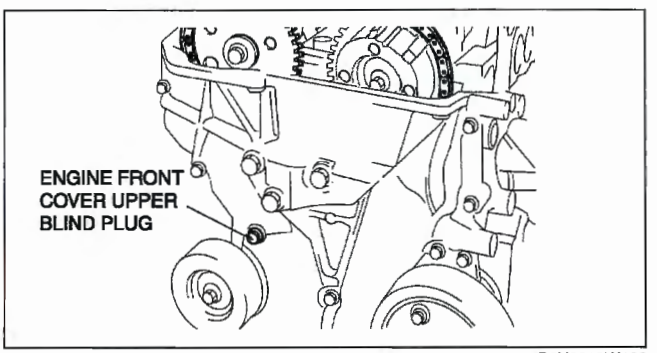

B6U2212W102

14. Install the **SST** as shown in the figure.
15. Rotate the crankshaft clockwise until the crankshaft is in the No.1 cylinder TDC position (until the balance weight is contacting the **SST**).

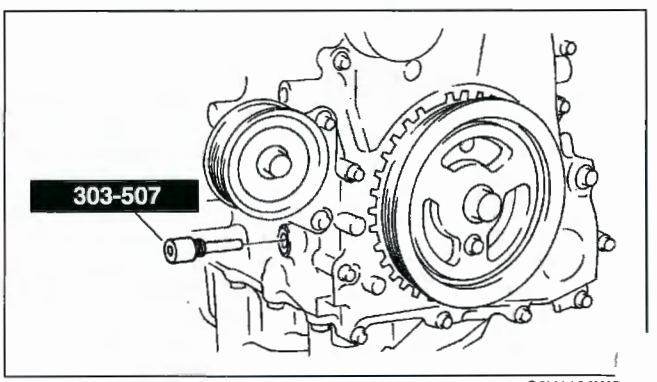

C6U110AWC

16. Loosen the timing chain.
    (1) Unlock the chain tensioner ratchet using a suitable screwdriver or equivalent tool.
    (2) Rotate the exhaust camshaft clockwise using a suitable wrench on the cast hexagon and loosen a timing chain.
    (3) Placing the suitable bolt **(M6 X 1.0 length 25—35 mm {0.99—1.37 in})** at the engine front cover upper blind plug, secure the chain guide at the position where the tension is released.

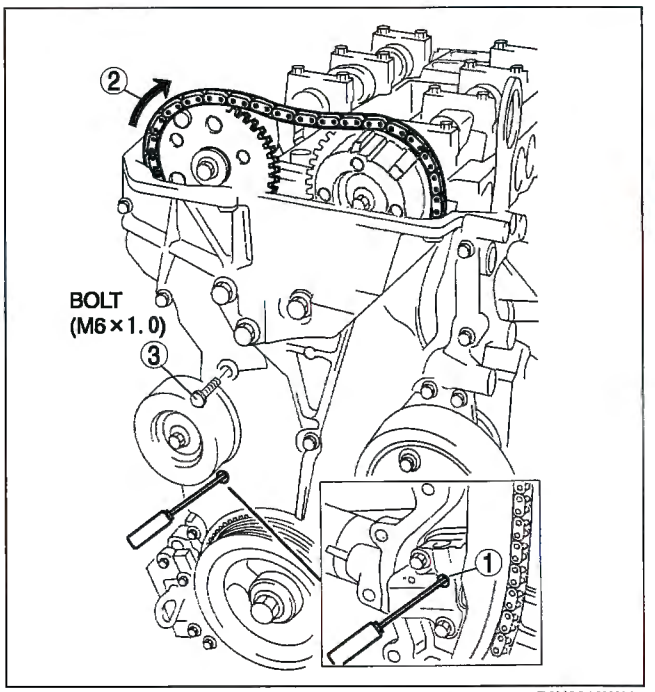

B6U2212W005

17. Hold the exhaust camshaft using a suitable wrench on the cast hexagon as shown in the figure.

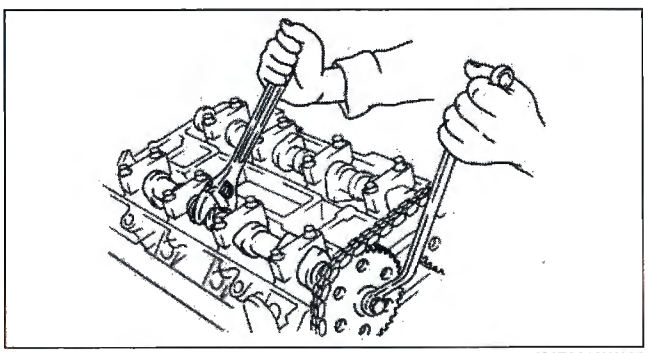
AME2212W006

18. Remove the exhaust camshaft sprocket.

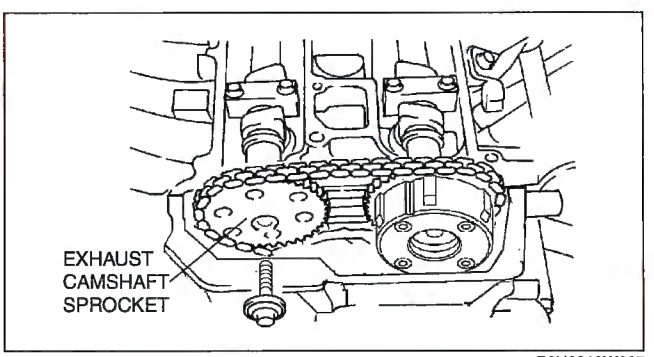

B6U2212W007

19. Loosen the camshaft cap bolts in two or three steps in the order shown in the figure.

Note
- The cylinder head and the camshaft caps are numbered to be reassembled in their original position correctly. When removed, keep the caps with the cylinder head from where they were removed. Do not mix the caps.

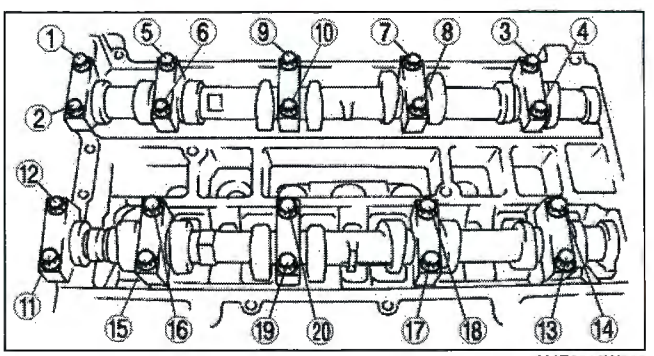

AME2212W008

20. Remove the camshaft.
21. Remove the tappet.

22. Select proper adjustment shim.
    New adjustment shim
    = Removed shim thickness + Measured valve clearance - Standard valve clearance (IN: 0.25 mm {0.0098 in}, EX: 0.30 mm {0.0118 in})
    Standard [Engine cold]
    IN: 0.22—0.28 mm {0.0087—0.0110 in}
    EX: 0.27—0.33 mm {0.0107—0.0129 in}
23. Install the camshaft and No.1 cylinder aligned with the TDC position.
24. Tighten the camshaft cap bolt in the following two steps.
    (1) Tighten to **5.0—9.0 N·m {51.0—91.7 kgf·cm, 44.3—79.6 in·lbf}**.
    (2) Tighten to **14.0—17.0 N·m {1.5—1.7 kgf·m, 10.4—12.5 ft·lbf}**.

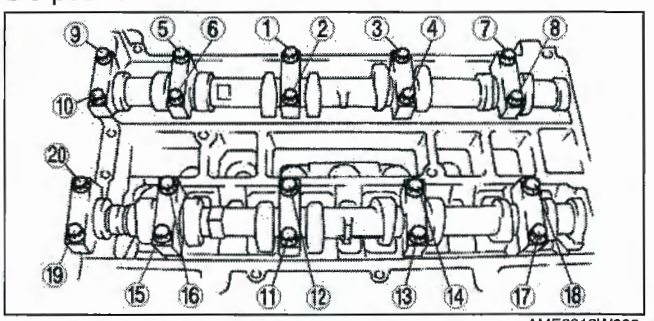

AME2212W009

25. Install a new washer.

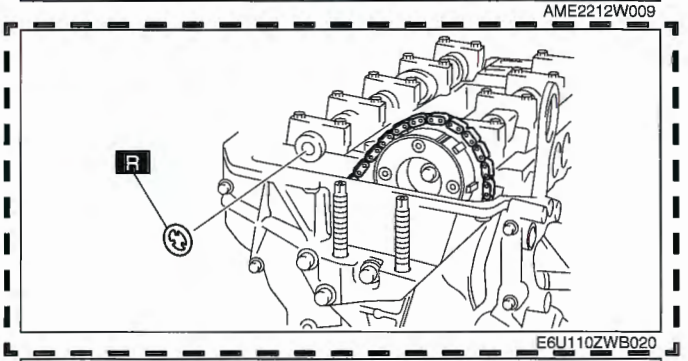

E6U110ZWB020

26. Install the exhaust camshaft sprocket.

    Note
    - Do not tighten the bolt for the camshaft sprocket during this step. First confirm the valve timing, then tighten the bolt.

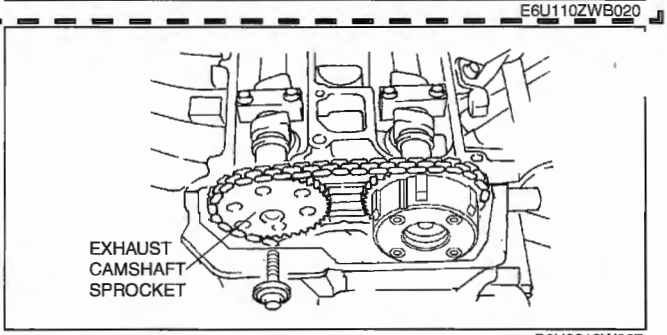

B6U2212W007

27. Install the **SST** to the camshaft as shown in the figure.
28. Remove the **(M6 X 1.0 length 25mm—35mm {0.99—1.37in})** bolt from the engine front cover to apply tension to the timing chain.
29. Turn the crankshaft clockwise until the crankshaft is in the No.1 cylinder TDC position (until the balance weight is contacting to the **SST**).

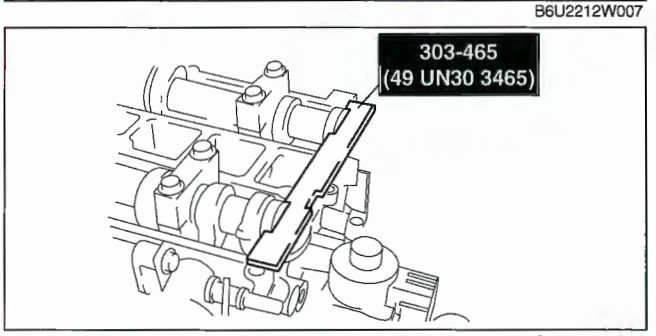

C3U0110W066

30. Hold the exhaust camshaft using a suitable wrench on the cast hexagon as shown in the figure.
31. Tighten the exhaust camshaft sprocket lock bolt.

    Tightening torque
    69—75 N·m {7.1—7.6 kgf·m, 50.9—55.3 ft·lbf}

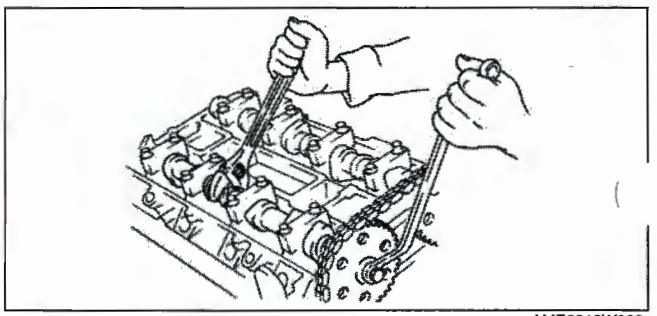
AME2212W006

32. Remove the **SST** from the camshaft.
33. Remove the **SST** from the block lower blind plug.

33. Rotate the crankshaft two times clockwise until the crankshaft is in the TDC position, reinstall the **SSTs** to the camshaft and cylinder block, and inspect the valve timing.
    - If not aligned, loosen the crankshaft pulley lock bolt and repeat from Step 16.

Apply silicone sealant to the engine front cover upper blind plug.

. Install the engine front cover upper blind plug.

Tightening torque
8.0—11.5 N·m {81.6—117.2 kgf·cm, 70.9—101.7 in·lbf}

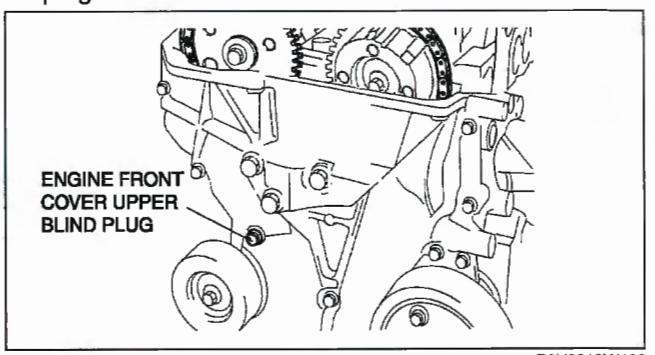

B6U2212W102

36. Install the cylinder block lower blind plug.

Tightening torque
18—22 N·m {1.9—2.2 kgf·m, 13.3—16.2 ft·lbf}

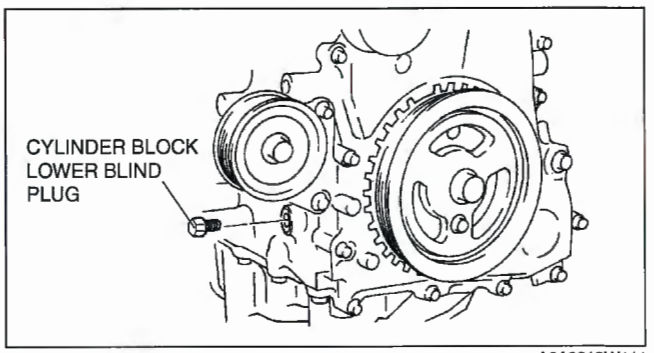

A6A2212W111

37. Install the new engine front cover lower blind plug.

Tightening torque
10.0—14.0 N·m {102.0—142.7 kgf·cm, 73.8—103.2 in·lbf}

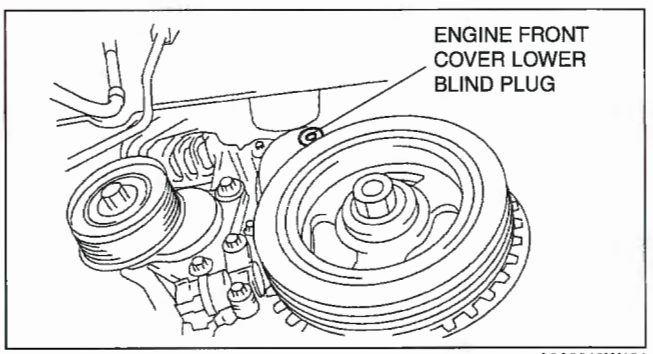

A6A2212W101

38. Connect the front drive shaft (RH) and the joint shaft. (See 03–13–16 FRONT DRIVE SHAFT REMOVAL/INSTALLATION [L3, L3 WITH TC].)
39. Install the drive belt. (See 01–10A–3 DRIVE BELT REPLACEMENT [L3].)
40. Install the cylinder head cover. (See 01–10A–18 Cylinder Head Cover Installation Note.)
41. Install the ventilation hose.
42. Install the oil control valve (OCV) connector.
43. Install the spark plugs. (See 01–18A–4 SPARK PLUG REMOVAL/INSTALLATION [L3, AJ].)
44. Install the plug hole plate. (See 01–10A–4 PLUG HOLE PLATE REMOVAL/INSTALLATION [L3].)
45. Install the splash shield (RH).
46. Install the tire (RH).

TIMING CHAIN REMOVAL/INSTALLATION [L3]

E6U011012201W02

Warning
- **Fuel vapor is hazardous. It can very easily ignite, causing serious injury and damage. Always keep sparks and flames away from fuel.**
- **Fuel line spills and leakage are dangerous. Fuel can ignite and cause serious injuries or death and damage. Fuel can also irritate skin and eyes. To prevent this, always complete the "Fuel Line Safety Procedure". (See 01–14A–6 Fuel Line Safety Procedure.)**

1. Disconnect the negative battery cable.
2. Remove the plug hole plate. (See 01–10A–4 PLUG HOLE PLATE REMOVAL/INSTALLATION [L3].)
3. Remove the dipstick.
4. Remove the spark plugs. (See 01–18A–4 SPARK PLUG REMOVAL/INSTALLATION [L3, AJ].)

5. Remove the tire (RH).
6. Remove the under cover.
7. Loosen the water pump pulley bolt and removal the drive belt. (See 01–10A–3 DRIVE BELT REPLACEMENT [L3].)
8. Remove the crankshaft position (CKP) sensor. (See 01–40A–45 CRANKSHAFT POSITION (CKP) SENSOF. REMOVAL/INSTALLATION [L3].)
9. Drain the engine oil. (See 01–11A–3 ENGINE OIL REPLACEMENT [L3, AJ].)
10. Remove the P/S oil pump with the oil hose still connected and position the P/S oil pump so that it is out of the way. (See 06–12–27 POWER STEERING OIL PUMP REMOVAL/INSTALLATION [L3, L3 WITH TC].)
11. Remove the front drive shaft (RH) from the joint shaft. (See 03–13–16 FRONT DRIVE SHAFT REMOVAL/ INSTALLATION [L3, L3 WITH TC].)
12. Remove in the order indicated in the table.
13. Install in the reverse order of removal.
14. Start the engine and:
    - Inspect for the engine oil, engine coolant, transaxle oil and fuel leakage.
    - Verify the ignition timing, idle speed and idle mixture. (See 01–10A–29 Ignition Timing Inspection.) (See 01–10A–30 Idle Speed Inspection.) (See 01–10A–30 Idle Mixture Inspection.)
15. Perform a road test.

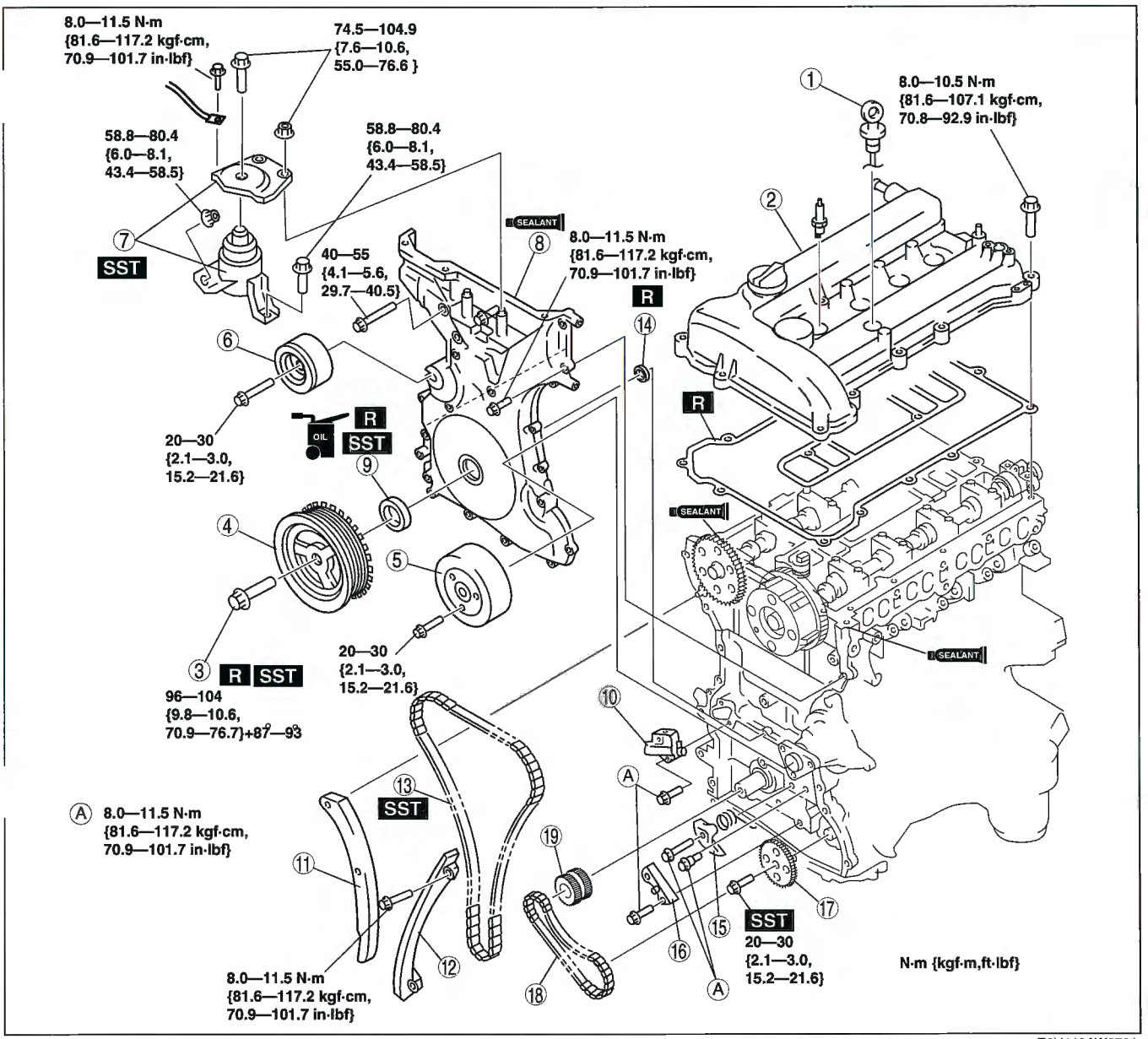

E6U110AW6701

1	Dipstick
2	Cylinder head cover (See 01–10A–18 Cylinder Head Cover Installation Note)
3	Crankshaft pulley lock bolt (See 01–10A–12 Crankshaft Pulley Lock Bolt Removal Note) (See 01–10A–17 Crankshaft Pulley Lock Bolt Installation Note)
4	Crankshaft pulley
5	Water pump pulley
6	Drive belt idler pulley
7	No.3 engine mount rubber and No.3 engine joint bracket (See 01–10A–12 No.3 Engine Mount Rubber and No.3 Engine Joint Bracket Removal Note) (See 01–10A–16 No.3 Engine Mount Rubber and No.3 Engine Joint Bracket Installation Note)
8	Engine front cover (See 01–10A–15 Engine Front Cover Installation Note)

9	Front oil seal (See 01–10A–14 Engine Front Cover Removal Note) (See 01–10A–16 Front Oil Seal Installation Note)
10	Chain tensioner (See 01–10A–12 Chain Tensioner Removal Note)
11	Tensioner arm
12	Chain guide
13	Timing chain (See 01–10A–14 Timing Chain Installation Note)
14	Seal
15	Oil pump chain tensioner
16	Oil pump chain guide
17	Oil pump sprocket (See 01–10A–14 Oil Pump Sprocket Removal Note) (See 01–10A–14 Oil Pump Sprocket Installation Note)
18	Oil pump chain
19	Crankshaft sprocket

Crankshaft Pulley Lock Bolt Removal Note

1. Remove the cylinder block lower blind plug.
2. Install the **SST**.
3. Rotate the crankshaft clockwise until the crankshaft is in the No.1 cylinder TDC position (until the balance weight is contacting to the **SST**).

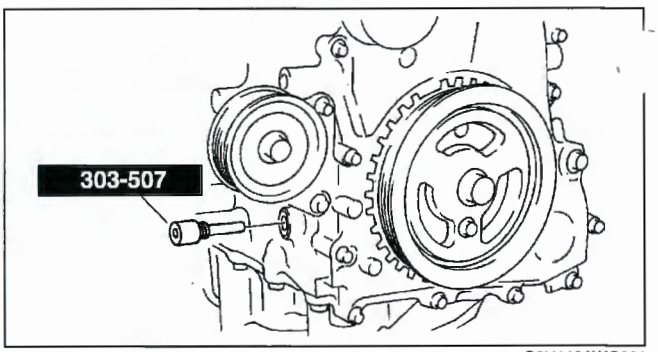

C6U110AWC001

4. Hold the crankshaft pulley using the **SSTs**.

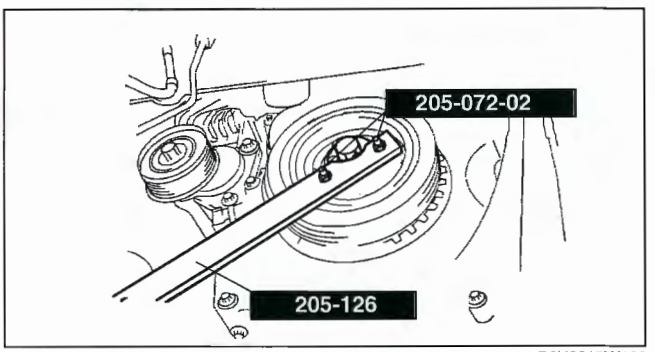

B6U2215W100

Chain Tensioner Removal Note

1. Hold the chain tensioner ratchet lock mechanism away from the ratchet stem using a thin screwdriver.
2. Slowly compress the tensioner piston.
3. Hold the tensioner piston using a **1.5 mm {0.059 in}** wire or paper clip.

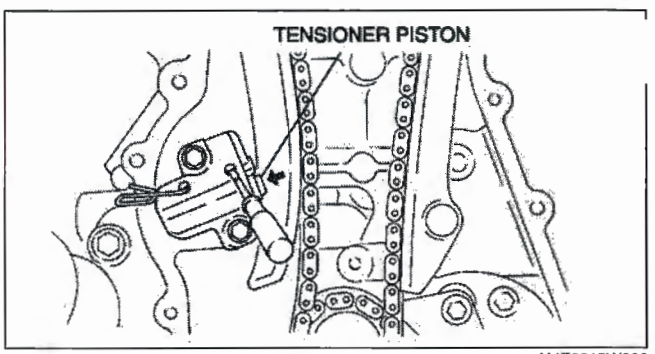

AME2215W003

No.3 Engine Mount Rubber and No.3 Engine Joint Bracket Removal Note

1. Install the **SST** using the following procedure.

Caution

- **Refer to the SST instruction manual for the basic handing procedure.**

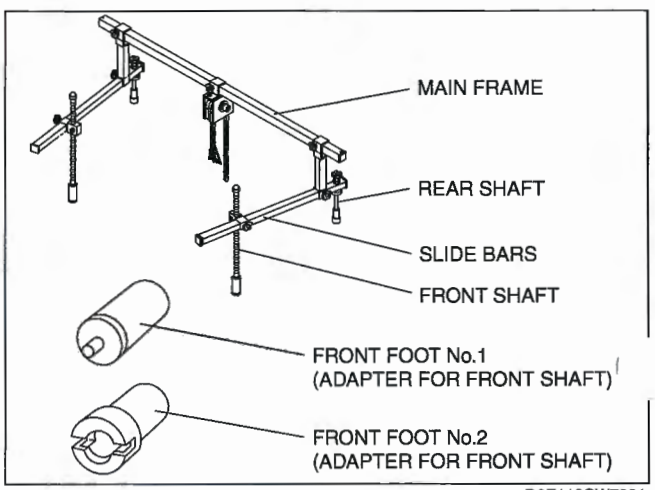

D6E110CW7001

(1) Install the right rear shaft of the **SST** to the bolt of the right shock absorber as shown in the figure.
(2) Install the left rear shaft of the **SST** to the bolt of the left shock absorber. (Identical position to the right side)

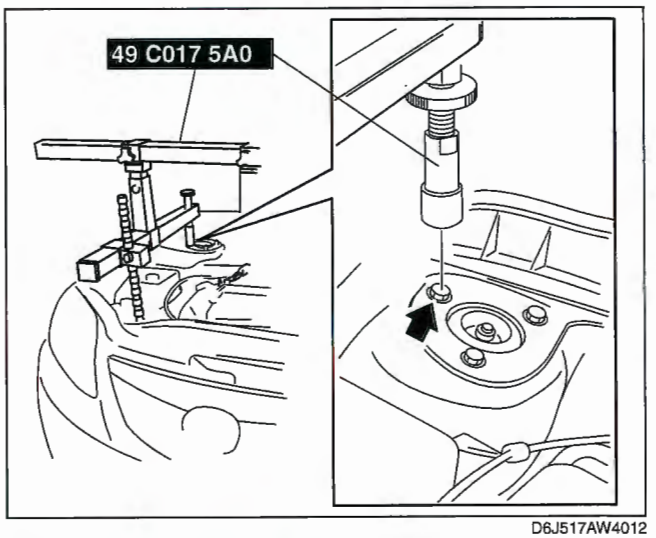

D6J517AW4012

(3) Install the left/right front shaft of the **SST** with front foot No.2 to the bolt as shown in the figure.

* : If equipped.

(4) Adjust the positions of the **SST** side bars so that they are the same height (left and right) and horizontal.
(5) Make sure each joint is securely tightened.

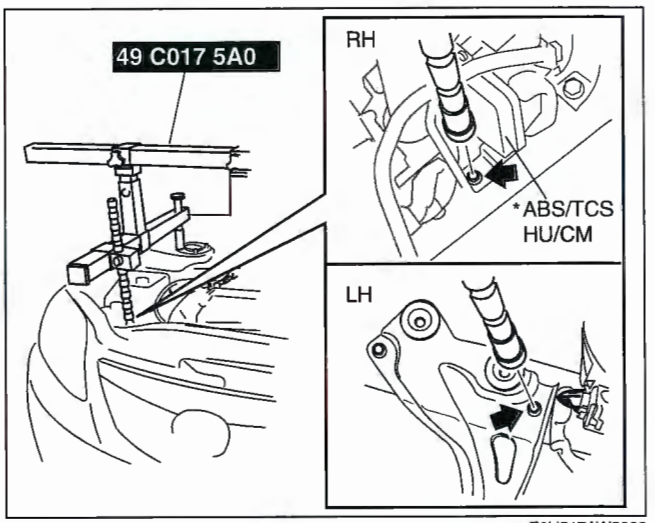

E6U517AW5003

2. Support the engine using the **SST**.

Note
- The SST (49 E017 5A0) can be used in place of the SST (49 C017 5A0).

3. Remove the No.3 engine mount.

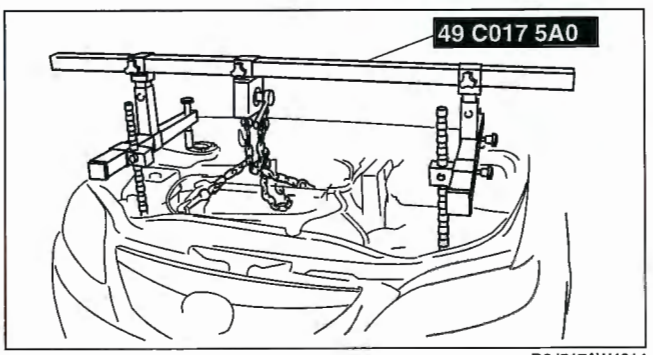

D6J517AW4014

Engine Front Cover Removal Note

1. Remove the oil seal using a screwdriver as shown in the figure.

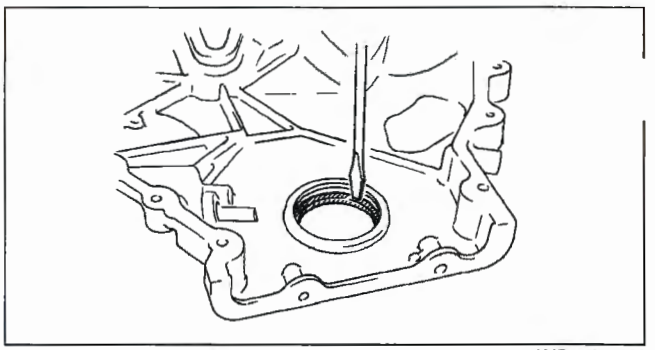

AME2215W006

Oil Pump Sprocket Removal Note

1. Hold the oil pump sprocket using the **SST**.

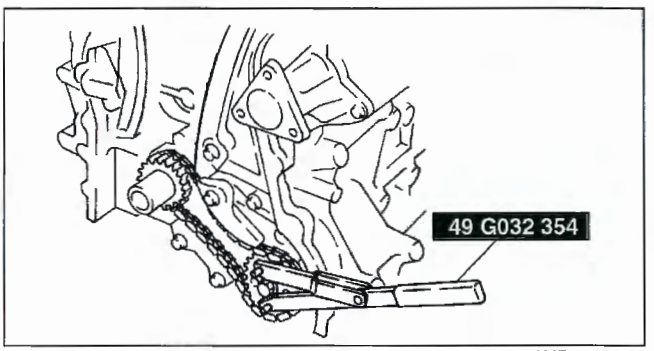

AME2215W005

Oil Pump Sprocket Installation Note

1. Hold the oil pump sprocket using the **SST**.

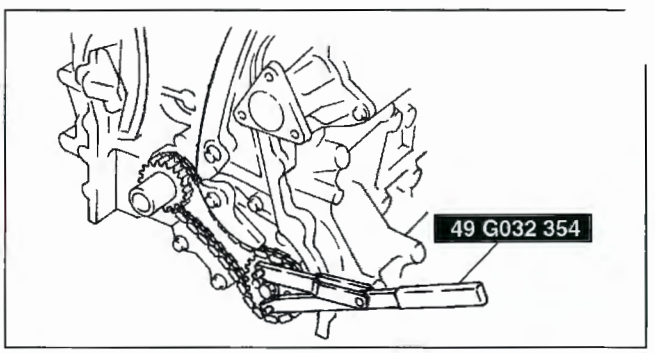

AME2215W005

Timing Chain Installation Note

1. Install the **SST** to the camshaft as shown in the figure.
2. Install the timing chain.
3. Remove the retaining wire or paper clip from the auto tensioner to apply tension to the timing chain.

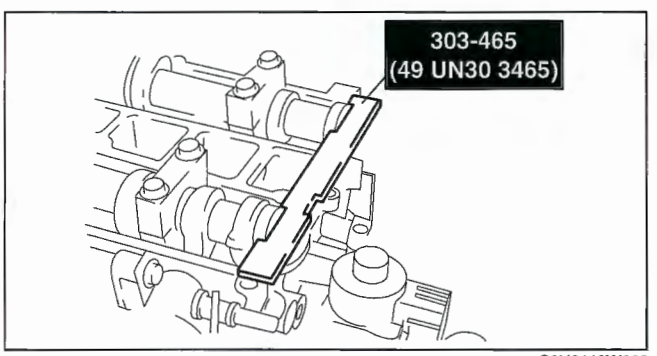

C3U0110W066

Engine Front Cover Installation Note

1. Apply silicone sealant to the engine front cover as shown in the figure.

Caution

- **Install the engine front cover within 10 min of applying the silicone sealant.**
- **Silicone sealant is not needed in the area indicated by C as shown in the figure as it is a seal.**

Thickness

A: 2.0—3.0 mm {0.079—0.118 in}
B: 1.5—2.5 mm {0.059—0.098 in}

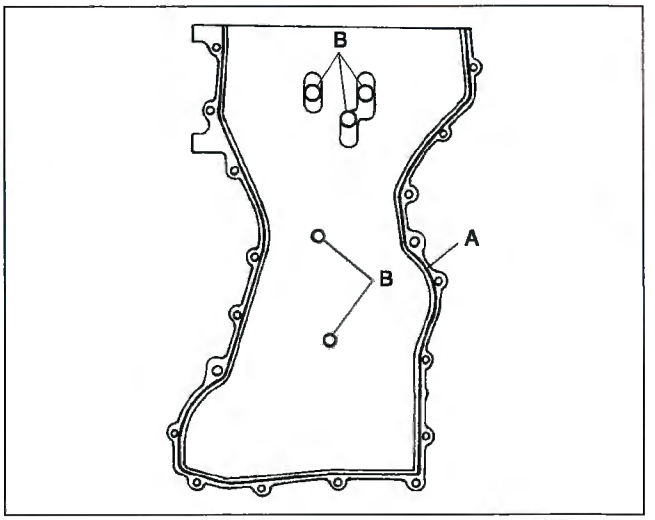

AME2215W007

2. Install the engine front cover bolts in the order as shown in the figure.

Bolt No.	Tightening torque
1—18	8.0—11.5 N·m {81.6—117.2 kgf·cm, 70.9—101.7 in·lbf}
19—22	40—55 N·m {4.1—5.6 kgf·m, 29.7—40.5 ft·lbf}

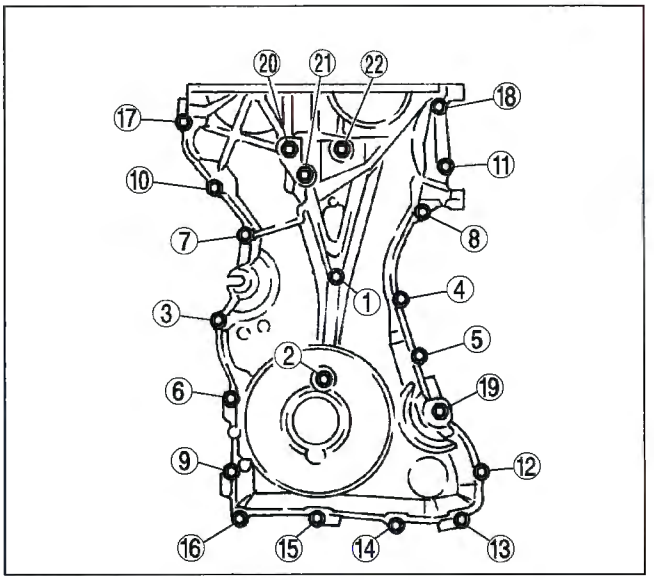

AME2215W008

Front Oil Seal Installation Note

1. Apply clean engine oil to the oil seal.
2. Push the oil seal slightly in by hand.
3. Compress the oil seal using the **SST** and a hammer.

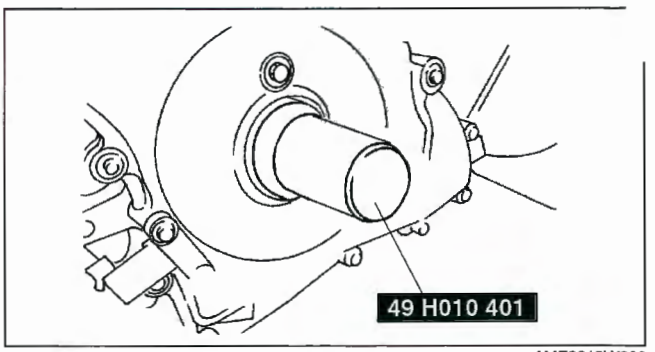

AME2215W009

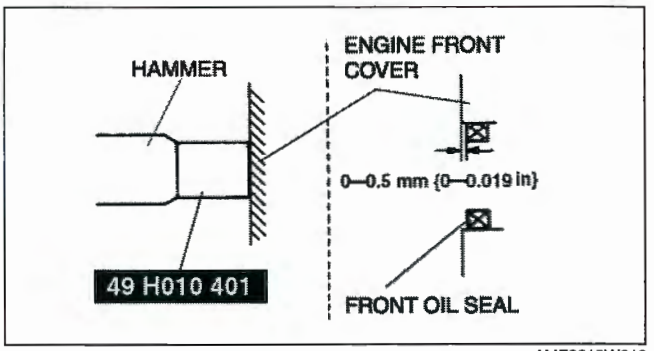

AME2215W010

No.3 Engine Mount Rubber and No.3 Engine Joint Bracket Installation Note

1. Tighten the stud bolt of the No.3 engine mount bracket.

   Tightening torque
   7.0—13 N·m {71.4—132.5 kgf·cm, 62.0—115.0 in·lbf}

2. Hand-tighten the No.3 engine mount rubber and No.3 engine joint bracket.

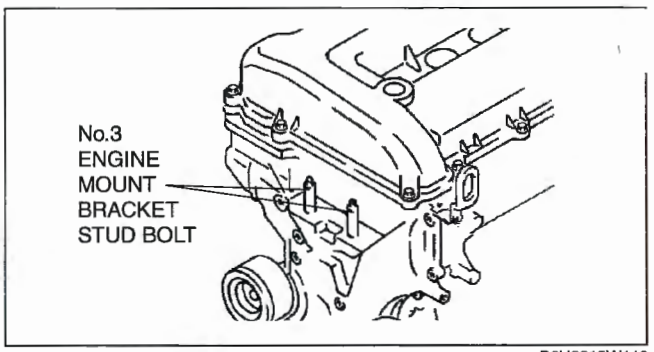

B6U2215W110

3. Tighten the bolts and nuts in the order shown in the figure.

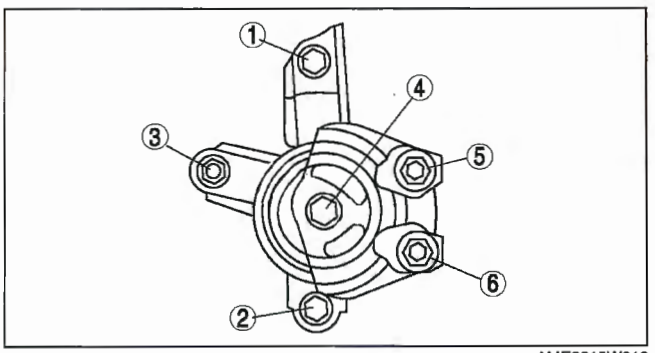

AME2215W012

Crankshaft Pulley Lock Bolt Installation Note

1. Install the **SST** to the camshaft as shown in the figure.

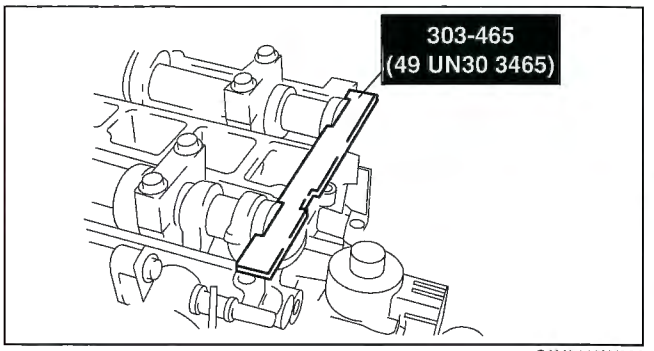

C3U0110W066

2. Install the **M6 x 1.0** bolt in by hand.
3. Rotate the crankshaft clockwise until the crankshaft is in the No.1 cylinder TDC position (until the balance weight is contacting to the **SST**).

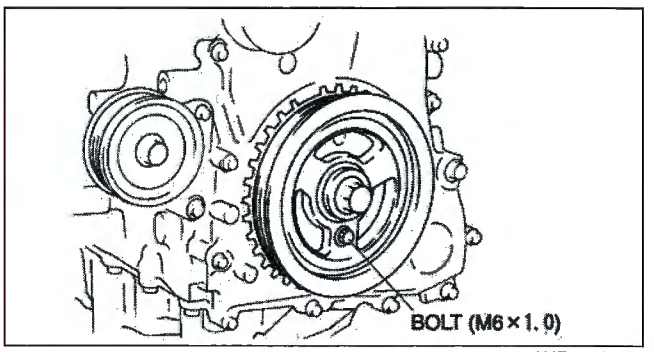

AME2215W013

4. Hold the crankshaft pulley using the **SST**.
5. Tighten the crankshaft pulley lock bolt in the following two steps using the **SST (49 D032 316)**.
   (1) Tighten to **96—104 N·m {9.8—10.6 kgf·m, 70.9—76.7 ft·lbf}**
   (2) Tighten **87°—93°**
6. Remove the **M6 x 1.0** bolt.
7. Remove the **SST** from the camshaft.
8. Remove the **SST** from the cylinder block lower blind plug.
9. Rotate the crankshaft two times clockwise until the crankshaft is in the TDC position, reinstall the **SSTs** to the camshaft and cylinder block, and inspect the valve timing.
   - If not aligned, loosen the crankshaft pulley lock bolt and repeat from Step 1.

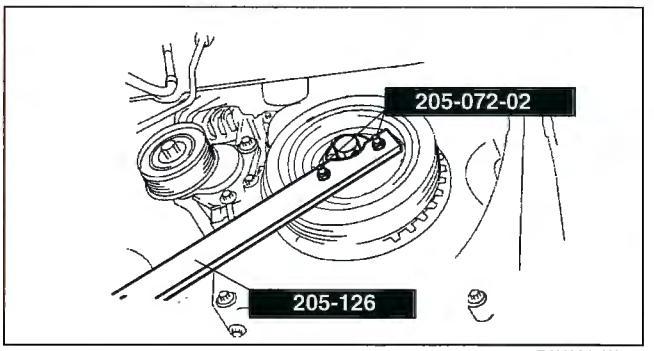

B6U2215W100

10. Install the cylinder block lower blind plug.

Tightening torque
18—22 N·m {1.9—2.2 kgf·m, 13.3—16.2 ft·lbf}

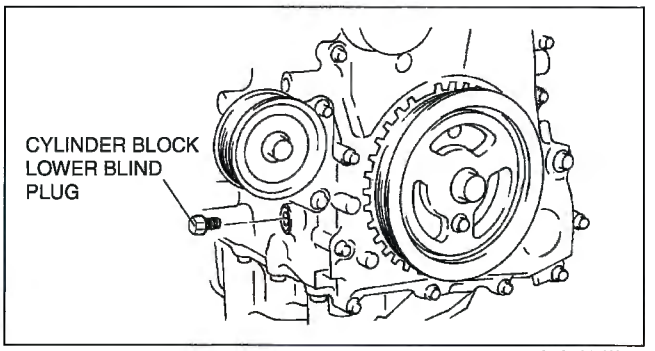

A6A2212W111

Cylinder Head Cover Installation Note

1. Apply silicone sealant to the mating faces as shown in the figure.

   Caution
   - **Install the cylinder head cover within 10 min of applying the silicone sealant.**

   Thickness
   4.0—6.0 mm {0.16—0.23 in}

2. Install the cylinder head cover with a new gasket.

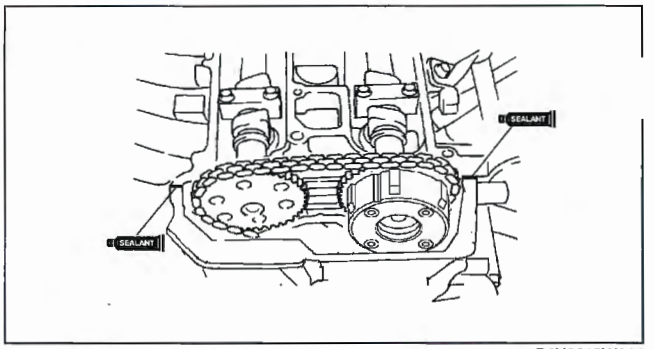

B6U2215W014

3. Tighten the bolts in the order shown in the figure.

   Tightening torque
   8.0—10.5 N·m {81.6—107.1 kgf·cm, 70.9—92.9 in·lbf}

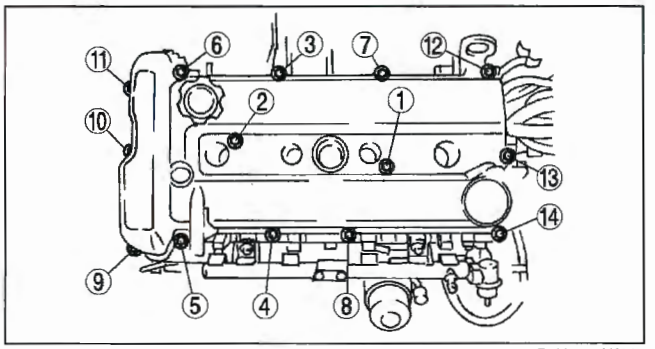

B6U2215W015

CYLINDER HEAD GASKET REPLACEMENT [L3]

E6U011010271W02

Warning
- **Fuel vapor is hazardous. It can very easily ignite, causing serious injury and damage. Always keep sparks and flames away from fuel.**
- **Fuel line spills and leakage are dangerous. Fuel can ignite and cause serious injuries or death a damage. Fuel can also irritate skin and eyes. To prevent this, always complete the "Fuel Line Safety Procedure". (See 01–14A–6 Fuel Line Safety Procedure.)**

1. Remove the timing chain. (See 01–10A–9 TIMING CHAIN REMOVAL/INSTALLATION [L3].)
2. Disconnect the generator, but do not remove it from the vehicle. Fix the generator using a rope to prevent it from falling. (See 01–17A–4 GENERATOR REMOVAL/INSTALLATION [L3, AJ].)
3. Remove the front pipe. (See 01–15A–2 EXHAUST SYSTEM REMOVAL/INSTALLATION [L3].)
4. Remove the intake manifold. (See 01–13A–4 INTAKE AIR SYSTEM REMOVAL/INSTALLATION [L3].)
5. Disconnect the heater hose, bypass hose, and radiator hose.
6. To firmly support the engine, first set the engine jack and attachment to the oil pan.
7. Remove in the order indicated in the table.
8. Install in the reverse order of removal.
9. Inspect the compression. (See 01–10A–4 COMPRESSION INSPECTION [L3].)

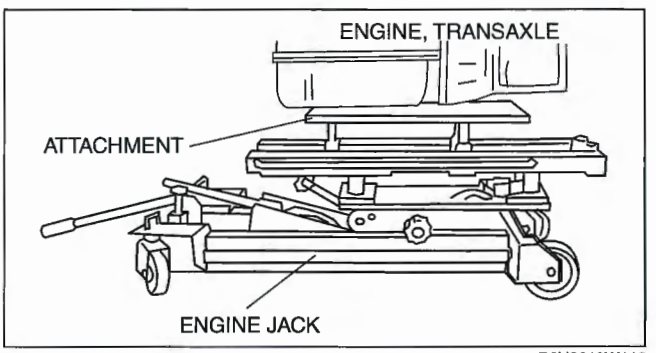

B6U2218W110

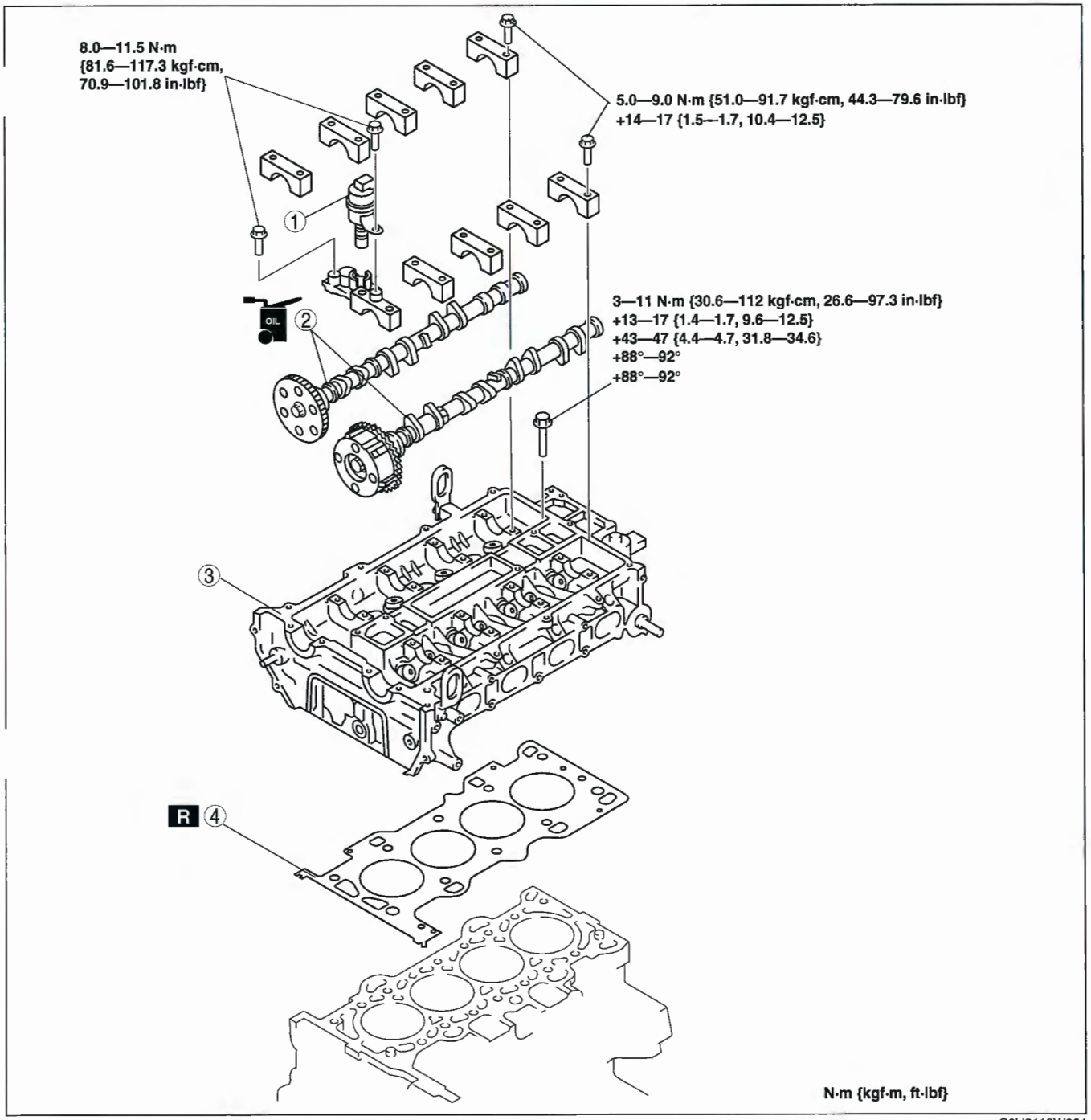

C6U0110W051

1	Oil control valve (OCV)
2	Camshaft (See 01–10A–20 Camshaft Removal Note) (See 01–10A–21 Camshaft Installation Note)

3	Cylinder head (See 01–10A–20 Cylinder Head Removal Note) (See 01–10A–20 Cylinder Head Installation Note)
4	Cylinder head gasket

Camshaft Removal Note

Note
- The cylinder head and the camshaft caps are numbered to be reassembled in their original position correctly. When removed, keep the caps with the cylinder head they were removed from. Do not mix the caps.

1. Loosen the camshaft cap bolts in two or three steps in the order shown in the figure.

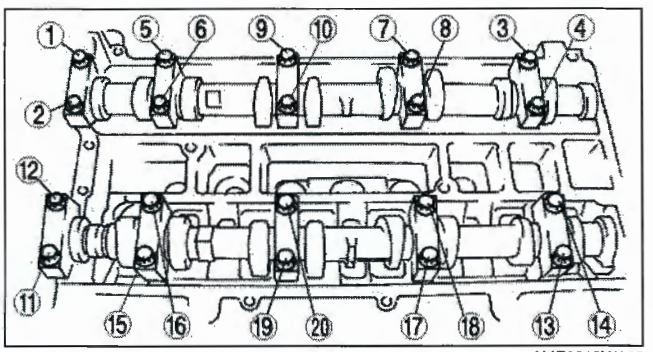

AME2212W008

Cylinder Head Removal Note

1. Loosen the cylinder head bolts in two or three steps in the order shown in the figure.

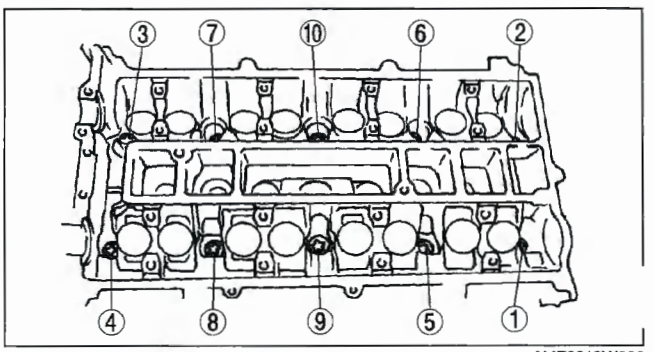

AME2218W003

Cylinder Head Installation Note

1. Measure the length of each cylinder head bolt.
   - Replace any that exceeds maximum length.

   Length L
   145.2—145.8 mm {5.717—5.740 in}

   Maximum
   146.5 mm {5.767 in}

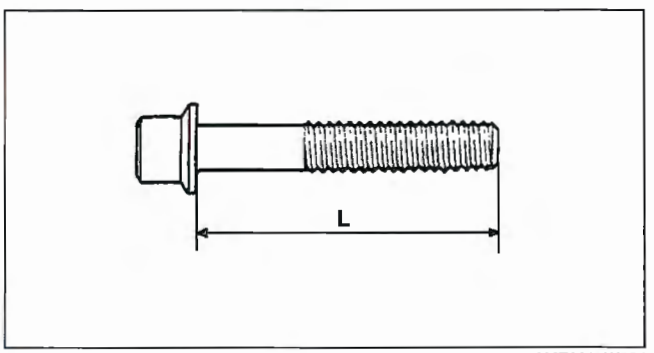

AME2218W004

2. Tighten the cylinder head bolts in the order shown following 5 steps.
   (1) Tighten to **3—11 N·m {30.6—112 kgf·cm, 26.6—97.3 in·lbf}**
   (2) Tighten **13—17 N·m {1.4—1.7 kgf·m, 9.6—12.5 ft·lbf}**
   (3) Tighten **43—47 N·m {4.4—4.7 kgf·m, 31.8—34.6 ft·lbf}**
   (4) Tighten **88°—92°**
   (5) Tighten **88°—92°**

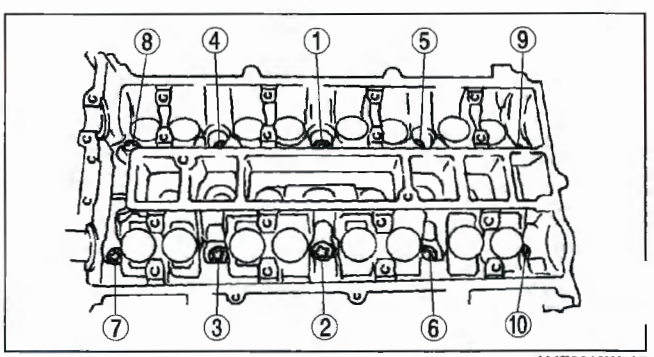

AME2218W005

Camshaft Installation Note

1. Set the cam position of No.1 cylinder at the top dead center (TDC) and install the camshaft.
2. Temporarily tighten the camshaft bearing caps evenly in two or three steps.
   Tighten the camshaft cap bolts in the order shown with the following two steps.
   (1) Tighten to **5.0—9.0 N·m {51.0—91.7 kgf·cm, 44.3—79.6 in·lbf}**
   (2) Tighten to **14—17 N·m {1.5—1.7 kgf·m, 10.4—12.5 ft·lbf}**

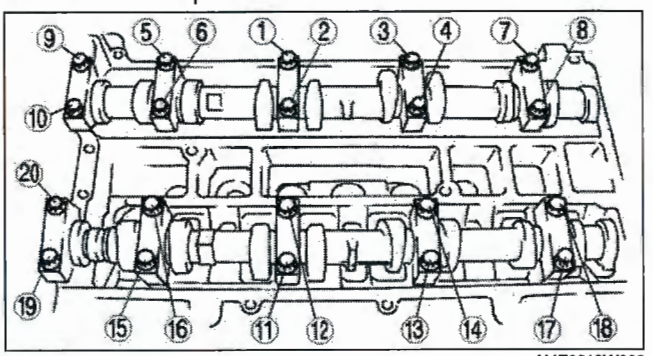

AME2212W009

FRONT OIL SEAL REPLACEMENT [L3]

E6U011010602W02

1. Disconnect the negative battery cable.
2. Remove the plug hole plate. (See 01–10A–4 PLUG HOLE PLATE REMOVAL/INSTALLATION [L3].)
3. Remove the dipstick.
4. Remove the spark plugs. (See 01–18A–4 SPARK PLUG REMOVAL/INSTALLATION [L3, AJ].)
5. Remove the cylinder head cover. (See 01–10A–18 Cylinder Head Cover Installation Note.)
6. Remove the drive belt. (See 01–10A–3 DRIVE BELT REPLACEMENT [L3].)
7. Remove the front drive shaft (RH) from the joint shaft. (See 03–13–16 FRONT DRIVE SHAFT REMOVAL/INSTALLATION [L3, L3 WITH TC].)
8. Remove the crankshaft position (CKP) sensor.
   (See 01–40A–45 CRANKSHAFT POSITION (CKP) SENSOR REMOVAL/INSTALLATION [L3].)
9. Remove in the order indicated in the table.
10. Install in the reverse order of removal.

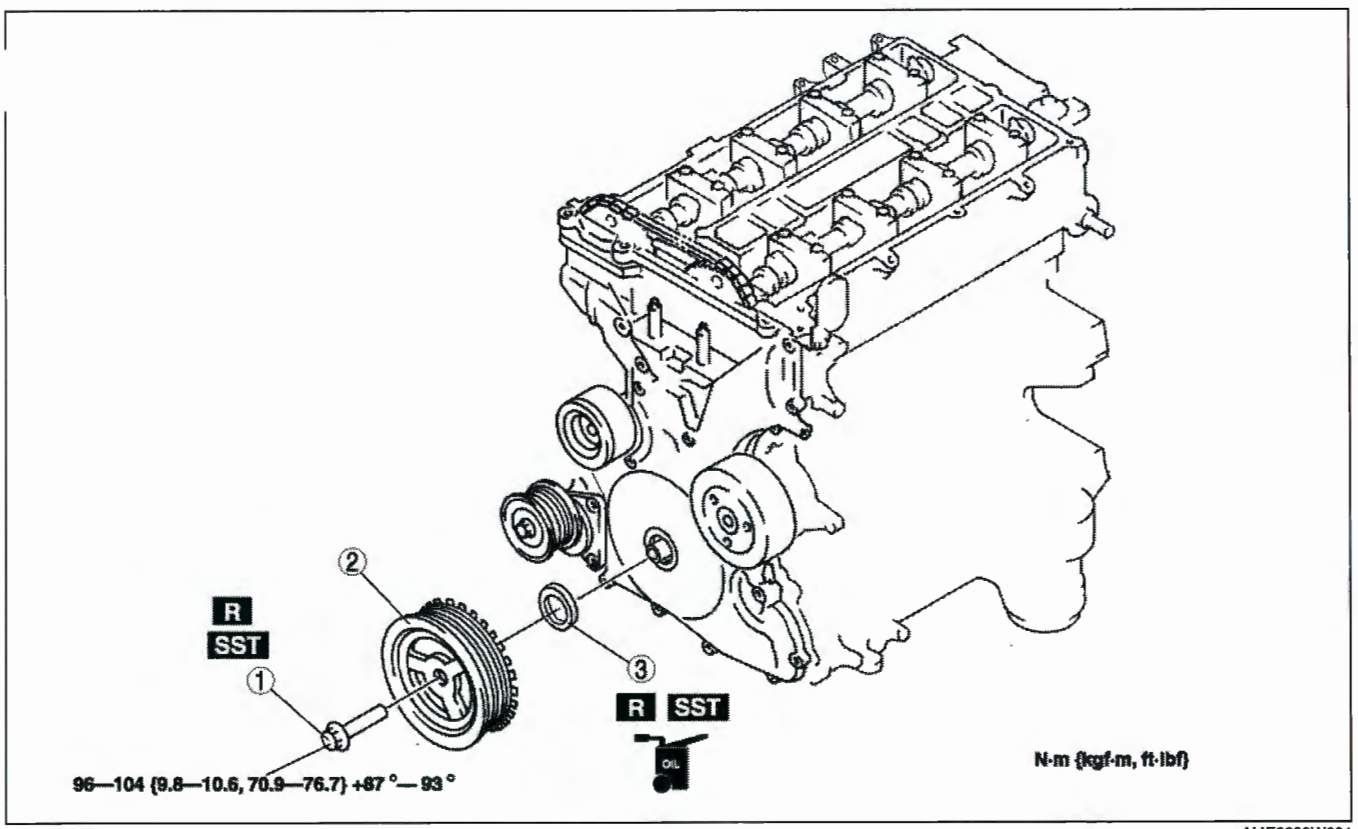

AME2220W001

1	Crankshaft pulley lock bolt (See 01–10A–22 Crankshaft Pulley Lock Bolt Removal Note) (See 01–10A–23 Crankshaft Pulley Lock Bolt Installation Note)

2	Crankshaft pulley
3	Front oil seal (See 01–10A–22 Front Oil Seal Removal Note) (See 01–10A–23 Front Oil Seal Installation Note)

Crankshaft Pulley Lock Bolt Removal Note

1. Remove the cylinder block lower blind plug.
2. Install the **SST**.
3. Rotate the crankshaft clockwise until the crankshaft is in the No.1 cylinder TDC position (until the balance weight is contacting to the **SST**).

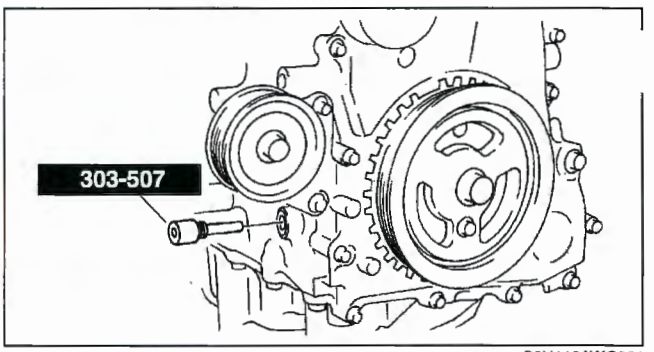

C6U110AWC001

4. Hold the crankshaft pulley using the **SSTs**.

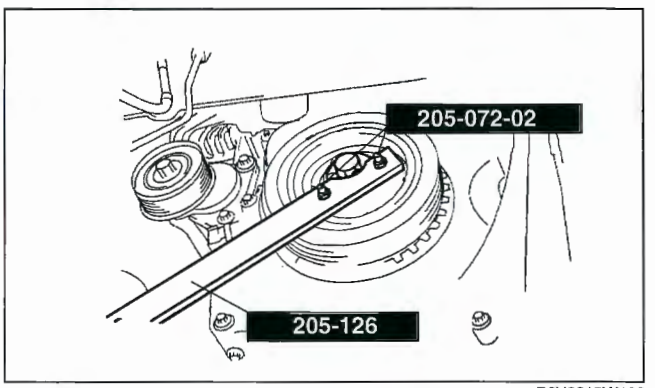

B6U2215W100

Front Oil Seal Removal Note

1. Cut the oil seal lip using a razor knife.
2. Remove the oil seal using a screwdriver wrapped with a rag.

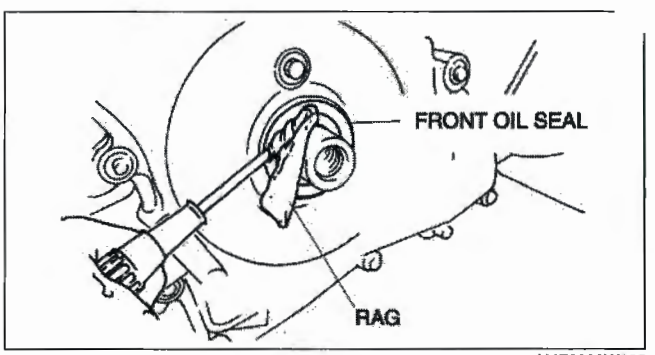

AME2220W002

Front Oil Seal Installation Note

1. Apply clean engine oil to the oil seal lip.
2. Push the oil seal slightly in by hand.
   Tap the oil seal in evenly using the **SST** and a hammer.

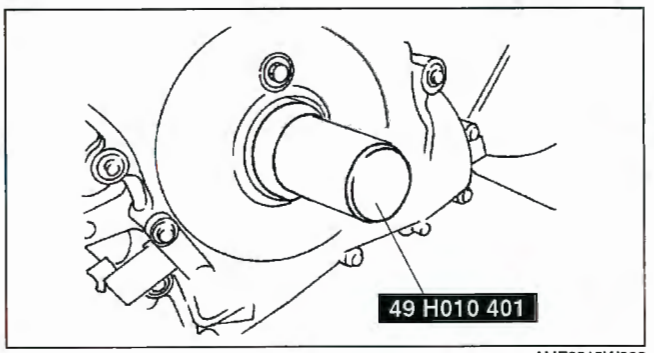

AME2215W009

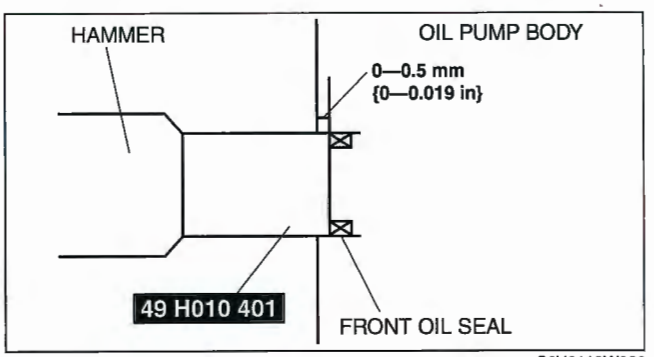

C6U0110W052

Crankshaft Pulley Lock Bolt Installation Note

1. Install the **SST** on the camshaft as shown in the figure.

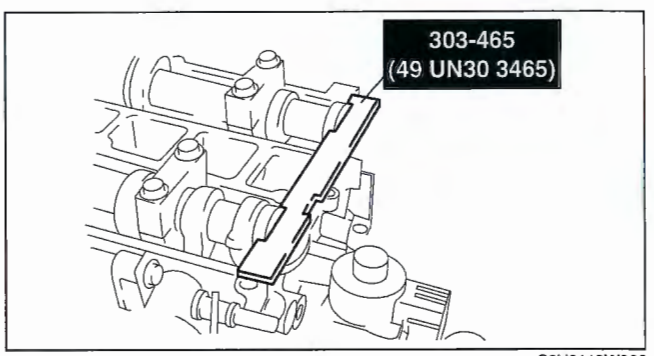

C3U0110W066

2. Install the **M6 x 1.0** bolt by hand.
3. Rotate the crankshaft clockwise until the crankshaft is in the No.1 cylinder TDC position (until the balance weight is contacting to the **SST**).

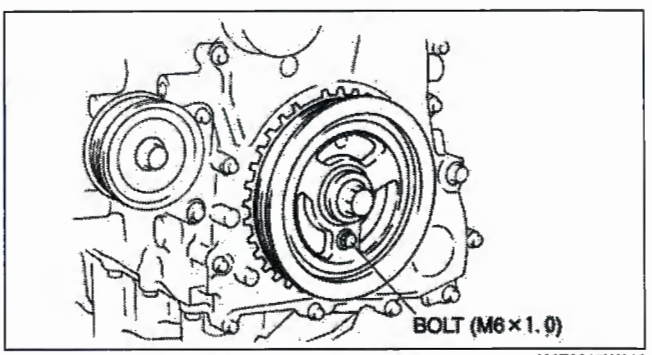

AME2215W013

4. Hold the crankshaft pulley using the **SSTs**.
5. Tighten the crankshaft pulley lock bolt in the order shown following two steps using the **SST (49 D032 316)**.
   (1) Tighten to **96—104 N·m {9.8—10.6 kgf·m, 70.9—76.7 ft·lbf}**
   (2) Tighten **87°—93°**
6. Remove the **M6 x 1.0** bolt.
7. Remove the **SST** from the camshaft.
8. Remove the **SST** from the cylinder block lower blind plug.
9. Rotate the crankshaft two times clockwise until the crankshaft is in the TDC position, reinstall the **SSTs** to the camshaft and cylinder block, and inspect the valve timing.
   - If not aligned, loosen the crankshaft pulley lock bolt and repeat from Step 1.
10. Install the cylinder block lower blind plug.

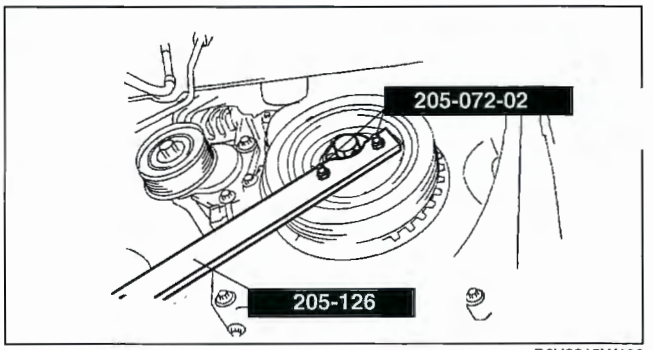

B6U2215W100

Tightening torque
18—22 N·m {1.9—2.2 kgf·m, 13.3—16.2 ft·lbf}

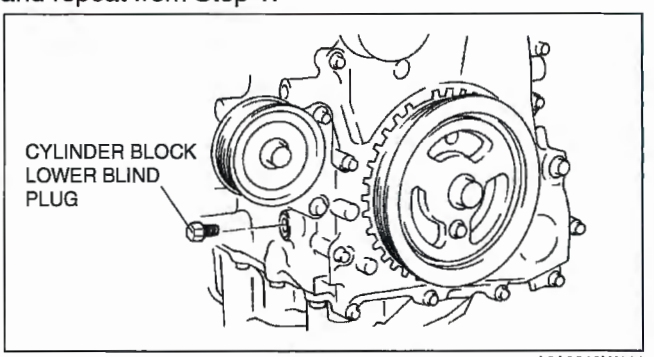

A6A2212W111

REAR OIL SEAL REPLACEMENT [L3]

E6U011011399W02

1. Remove the flywheel. (MTX) (See 05–10–19 CLUTCH UNIT REMOVAL/INSTALLATION [G35M-R, A65M-R].)
2. Remove the drive plate. (ATX) (See 05–17A–56 DRIVE PLATE REMOVAL/INSTALLATION [FS5A-EL].) (See 05–17B–54 DRIVE PLATE REMOVAL/INSTALLATION [AW6A-EL].)
3. Remove in the order indicated in the table.
4. Install in the reverse order of removal.

1	Bolt
2	Rear oil seal (See 01–10A–24 Rear Oil Seal Installation Note)

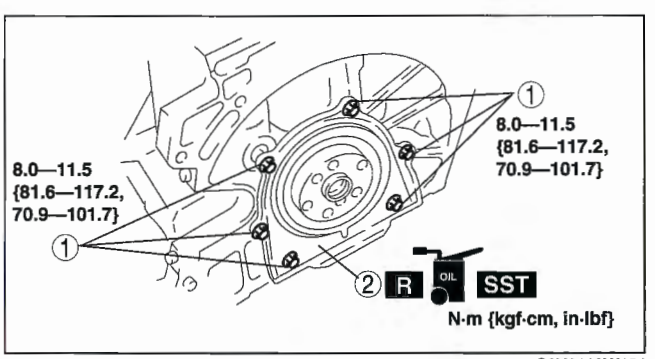

C3U0110W124

Rear Oil Seal Installation Note

1. Apply silicone sealant to the mating faces as shown in the figure.

   Thickness
   4.0—6.0 mm {0.16—0.23 in}

2. Apply clean engine oil to the new oil seal lip.

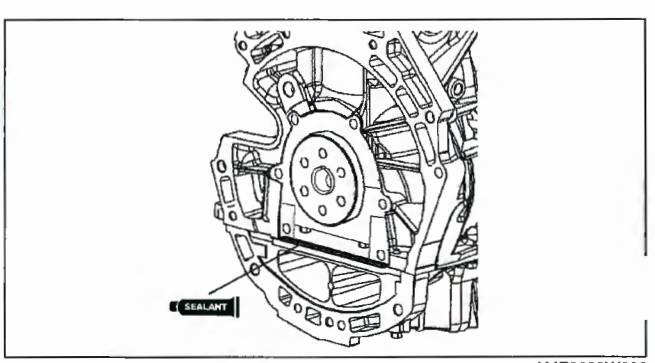

AME2222W002

3. Install the rear oil seal using the **SST** as shown in the figure.

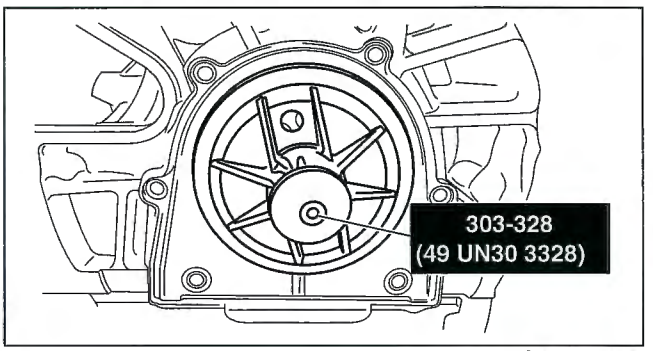

CUE110BW2005

4. Tighten the rear oil seal bolts in the order as shown.

Tightening torque
8.0—11.5 N·m {81.6—117.2 kgf·cm, 70.9—101.7 in·lbf}

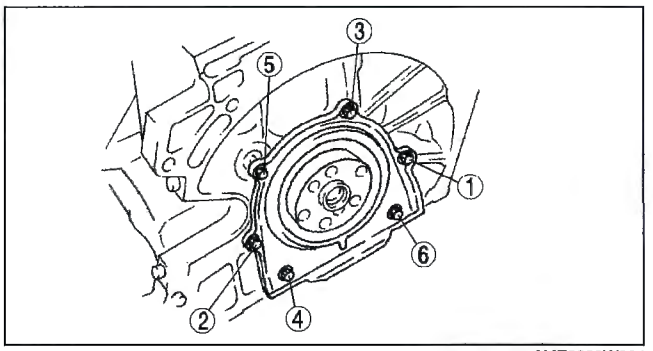

AME2222W004

ENGINE REMOVAL/INSTALLATION [L3]

E6U011002000W10

Warning
- **Fuel vapor is hazardous. It can very easily ignite, causing serious injury and damage. Always keep sparks and flames away from fuel.**
- **Fuel line spills and leakage are dangerous. Fuel can ignite and cause serious injuries or death and damage. Fuel can also irritate skin and eyes. To prevent this, always complete the "Fuel Line Safety Procedure". (See 01–14A–6 Fuel Line Safety Procedure.)**

1. Remove the battery. (See 01–17A–1 BATTERY REMOVAL/INSTALLATION [L3, AJ].)
2. Remove the battery tray. (See 01–17A–1 BATTERY REMOVAL/INSTALLATION [L3, AJ].)
3. Remove the shroud panel. (See 09–10–17 SHROUD PANEL REMOVAL/INSTALLATION.)
4. Remove the radiator. (See 01–12A–8 RADIATOR REMOVAL/INSTALLATION [L3, AJ].)
5. Drain the transaxle oil.
6. Remove the plug hole plate.
   (See 01–10A–4 PLUG HOLE PLATE REMOVAL/INSTALLATION [L3].)
7. Remove the P/S oil pump with the oil hose still connected and position the P/S oil pump so that it is out of the way. (See 06–12–27 POWER STEERING OIL PUMP REMOVAL/INSTALLATION [L3, L3 WITH TC])
8. Remove the A/C compressor with the pipes still connected. Position the A/C compressor so that it is out of the way. Use wire or rope to secure.
9. Remove the joint shaft. (See 03–13–3 JOINT SHAFT REMOVAL/INSTALLATION [L3].)
10. Remove the front drive shaft (LH) from the transaxle. (See 03–13–16 FRONT DRIVE SHAFT REMOVAL/INSTALLATION [L3, L3 WITH TC].)
11. Remove the air cleaner, intake air duct and bracket, and vacuum hose. (See 01–13A–4 INTAKE AIR SYSTEM REMOVAL/INSTALLATION [L3].)
12. Remove the ATF hose and selector cable. (ATX) (See 05–17A–39 AUTOMATIC TRANSAXLE REMOVAL/INSTALLATION [FS5A-EL].)
13. Remove the vacuum hose and heater hose.
14. Remove the release cylinder and control cable. (MTX) (See 05–15A–4 MANUAL TRANSAXLE REMOVAL/INSTALLATION [G35M-R].)
15. Remove the fuel hose. (See 01–14A–16 Plastic Fuel Hose Removal Note.) (See 01–14A–20 Plastic Fuel Hose Installation Note.)
16. Disconnect the wiring harness from the engine side.
    Remove the front pipe. (See 01–15A–2 EXHAUST SYSTEM REMOVAL/INSTALLATION [L3].)
17. Remove in the order indicated in the table.
19. Install in the reverse order of removal.

20. Start the engine and:
    - Inspect for the engine oil, engine coolant, transaxle oil and fuel leakage.
    - Verify the ignition timing, idle speed and idle mixture. (See 01–10A–29 Ignition Timing Inspection.) (See 01–10A–30 Idle Speed Inspection.) (See 01–10A–30 Idle Mixture Inspection.)
21. Perform a road test.

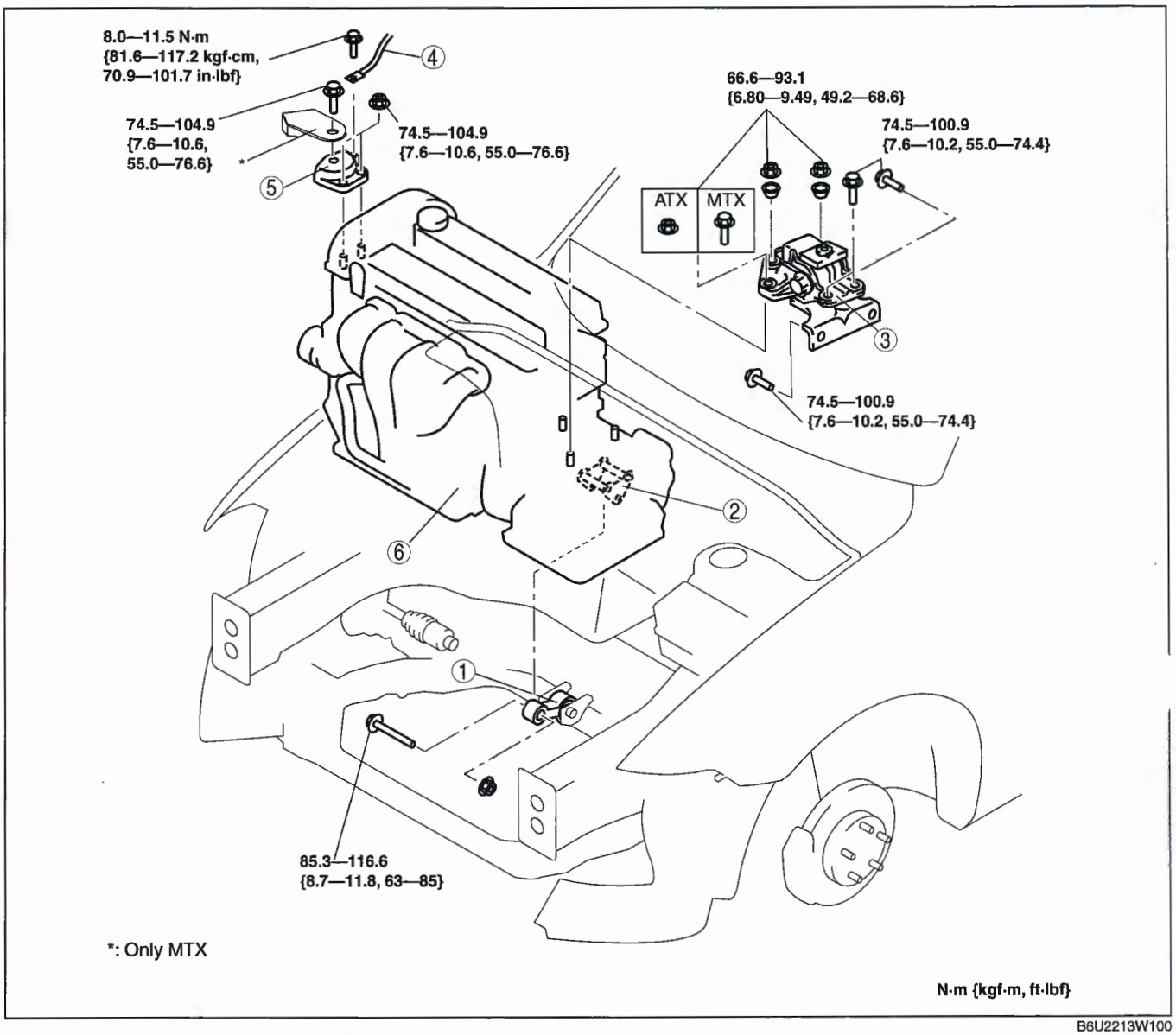

B6U2213W100

1	No.1 Engine mount rubber (See 01–10A–27 No.1 Engine Mount Rubber Removal Note) (See 01–10A–29 No.1 Engine Mount Rubber Installation Note)
2	No.1 Engine mount bracket (See 01–10A–28 No.1 Engine Mount Bracket Installation Note)
3	No.4 Engine mount bracket and No.4 Engine mount rubber (See 01–10A–27 No.4 Engine Mount Bracket and No.4 Engine Mount Rubber Removal Note) (See 01–10A–28 No.4 Engine Mount Bracket and No.4 Engine Mount Rubber Installation Note)
4	Engine ground
5	No.3 Engine joint bracket (See 01–10A–28 No.3 Engine Joint Bracket Installation Note)
6	Engine, transaxle

No.1 Engine Mount Rubber Removal Note

1. Remove through bolt A on the No.1 engine mount bracket side.
2. Loosen through bolt B on the crossmember side until approximately three pitches are showing.

Note

- Do not remove the No.1 engine mount rubber from the vehicle.

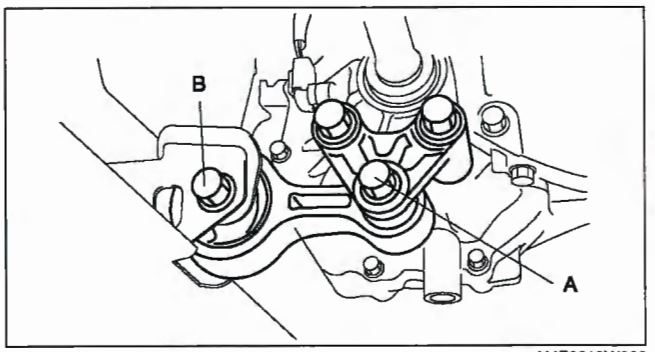

AME2213W002

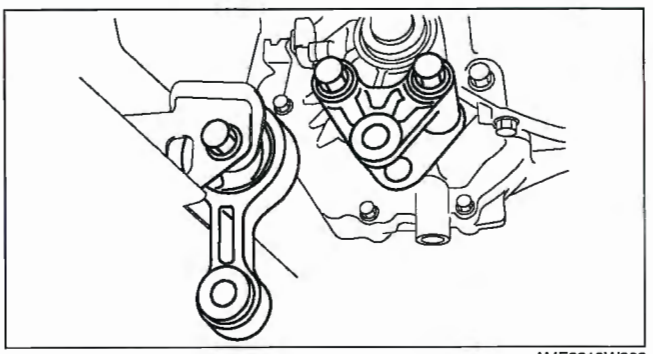

AME2213W003

No.4 Engine Mount Bracket and No.4 Engine Mount Rubber Removal Note

1. Secure the engine and the transaxle using a hoist.

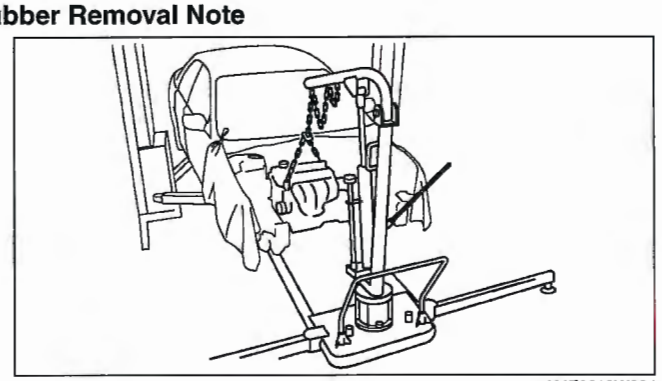

AME2213W004

2. Remove the No.4 engine mount bracket and engine mount rubber together as a unit.

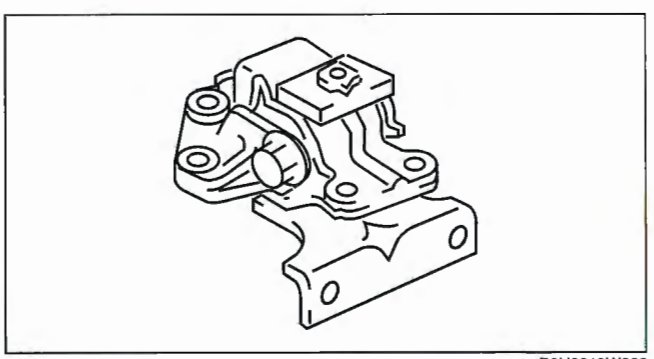

B6U2213W003

No.3 Engine Joint Bracket Installation Note

1. Tighten the No.3 engine mount bracket stud bolt.

Tightening torque
7.0—13 N·m {71.4—132.5 kgf·cm, 62.0—115.0 in·lbf}

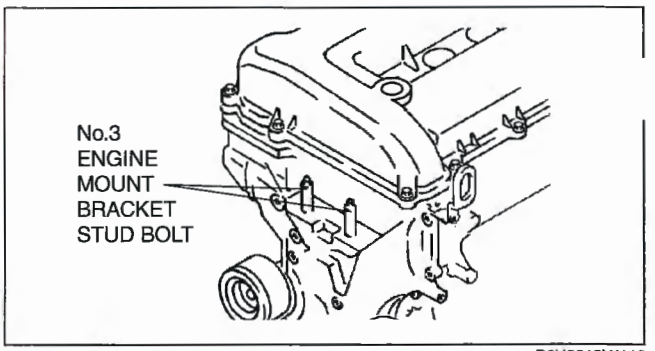

B6U2215W110

2. Tighten the No.3 engine joint bracket bolt and nut in the order as shown.

Tightening torque
74.5—104.9 N·m {7.6—10.6 kgf·m, 55.0—76.6 ft·lbf}

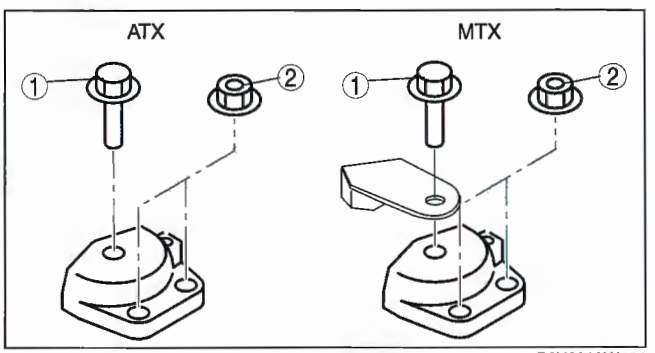

B6U2213W001

No.4 Engine Mount Bracket and No.4 Engine Mount Rubber Installation Note

1. Tighten the No.4 engine mount bracket and No.4 engine mount rubber bolt and nut in the order as shown.

Bolt and nut No.	Tightening torque (N·m {kgf·m, ft·lbf})
1, 2, 3	74.5—100.9 {7.6—10.2, 55.0—74.4}
4, 5, 6	66.6—93.1 {6.80—9.49, 49.2—68.6}

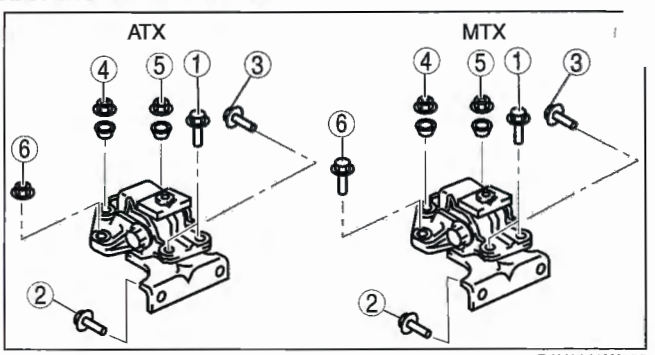

B6U2213W002

No.1 Engine Mount Bracket Installation Note

1. Tighten No.1 engine mount bracket bolt A.

Tightening torque
93.1—116.6 N·m {9.5—11.8 kgf·m, 68.7—85.9 ft·lbf}

2. Tighten No.1 engine mount bracket bolt B.

Tightening torque
93.1—116.6 N·m {9.5—11.8 kgf·m, 68.7—85.9 ft·lbf}

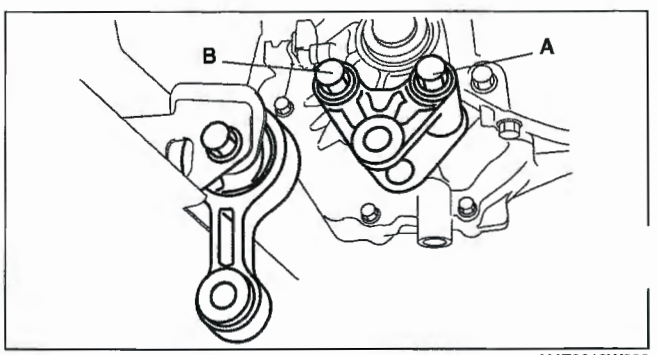

AME2213W008

No.1 Engine Mount Rubber Installation Note

1. Tighten through bolt A on the No.1 engine mount bracket.

   Tightening torque
   85.3—116.6 N·m {8.7—11.8 kgf·m, 63—85 ft·lbf}

2. Tighten through bolt B on the crossmember side.

   Tightening torque
   93.1—116.6 N·m {9.5—11.8 kgf·m, 68.7—85.9 ft·lbf}

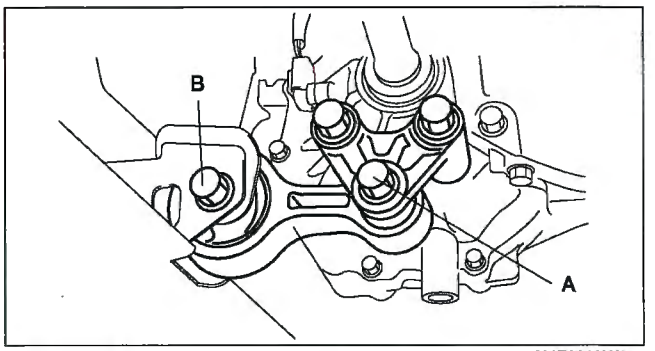

AME2213W009

ENGINE DISASSEMBLY/ASSEMBLY [L3]

E6U011002000W11

1. Disconnect the engine and automatic transaxle. (ATX) (See 05–17B–30 AUTOMATIC TRANSAXLE REMOVAL/INSTALLATION [AW6A-EL].)
2. Disconnect the engine and manual transaxle. (MTX) (See 05–15A–4 MANUAL TRANSAXLE REMOVAL/INSTALLATION [G35M-R].)
3. Remove the intake-air system. (See 01–13A–4 INTAKE AIR SYSTEM REMOVAL/INSTALLATION [L3].)
4. Remove the exhaust system. (See 01–15A–2 EXHAUST SYSTEM REMOVAL/INSTALLATION [L3].)
5. Remove the generator. (See 01–17A–4 GENERATOR REMOVAL/INSTALLATION [L3, AJ].)
6. Remove the ignition coils. (See 01–18A–2 IGNITION COIL REMOVAL/INSTALLATION [L3, AJ].)
7. Remove the crankshaft position (CKP) sensor. (See 01–40A–45 CRANKSHAFT POSITION (CKP) SENSOR REMOVAL/INSTALLATION [L3].)
8. Assemble in the reverse order of disassembly.

ENGINE TUNE-UP [L3]

E6U011002000W12

Engine Tune-up Preparation

1. Turn off the electrical loads.
2. Warm up the engine as follows.
   (1) Start the engine.
   (2) Maintain the engine speed **2,500—3,000 rpm** until the cooling fans start to operate.
   (3) Release the accelerator pedal.
   (4) Wait until the cooling fans stop.
3. Connect the **SST** (WDS or equivalent) to the DLC-2.

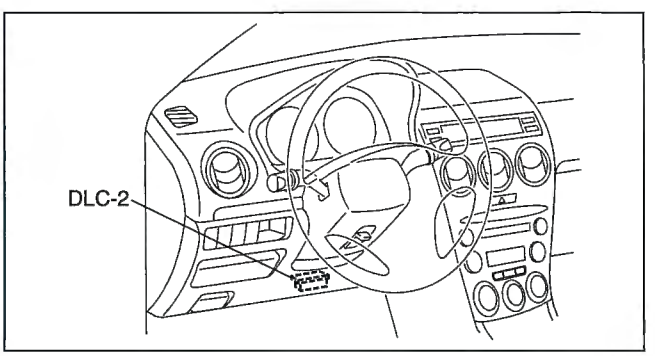

A6E3970W002

Ignition Timing Inspection

Note
- Ignition timing is not adjustable.
- Ignition timing verification requires WDS or equivalent.

Verify that the ignition timing (WDS: SPARKADV PID) is within the specification using WDS or equivalent.

Ignition timing
Approx. BTDC 8°

2. Verify that ignition timing advances when the engine speed increases gradually.

Idle Speed Inspection

Note
- Idle speed is not adjustable.
- Idle speed verification requires WDS or equivalent.

1. Verify that the idle speed (WDS: RPM PID) is within the specification using WDS or equivalent.

Standard

Condition	Engine speed (rpm)*1 N, D position (ATX), Neutral position (MTX)		
	ATX		MTX
	N range	D range	
No load	650—750	600—700	650—750
Electrical loads*2 ON	650—750	650—750	650—750
P/S ON	650—750	650—750	650—750
A/C ON and refrigerant pressure switch (middle) OFF	700—800	700—800	700—800
A/C ON and refrigerant pressure switch (middle) ON	700—800	700—800	700—800

*1 : Excludes temporary idle speed drop just after the electrical loads are turned on.
*2 : Blower motor is operating at high speed. Headlight switch is turned on. Rear window defroster switch is turned on. Cooling fans are operating.

Idle Mixture Inspection

1. Verify that the idle speed and ignition timing are within the specification. (See 01–10A–30 Idle Speed Inspection.) (See 01–10A–29 Ignition Timing Inspection.)
2. Insert an exhaust gas analyzer to the tailpipe.
3. Verify that the CO and HC concentrations are within the regulation.

VARIABLE VALVE TIMING ACTUATOR INSPECTION [L3]

E6U011012490W03

Caution
- **The variable valve timing actuator cannot be disassembled because it is a precision unit.**

1. Disconnect the negative battery cable.
2. Remove the plug hole plate. (See 01–10A–4 PLUG HOLE PLATE REMOVAL/INSTALLATION [L3].)
3. Remove the dipstick.
4. Remove the oil control valve (OCV) connector.
5. Remove the ventilation hose.
6. Remove the cylinder head cover.
7. Confirm that the groove on the rotor and the notch on the cover of the variable valve timing actuator are aligned and fitted.
   - If the groove and the notch are not aligned, turn the crankshaft clockwise two rotations. Verify that the groove and the notch are aligned.
   - If the groove and notch are still not aligned, replace the variable valve timing actuator.
   - If, when turning the crankshaft, there is a hitting noise from the variable valve timing actuator each time the cam passes the fully lifted position, it means that the actuator is not secured. Replace the actuator.

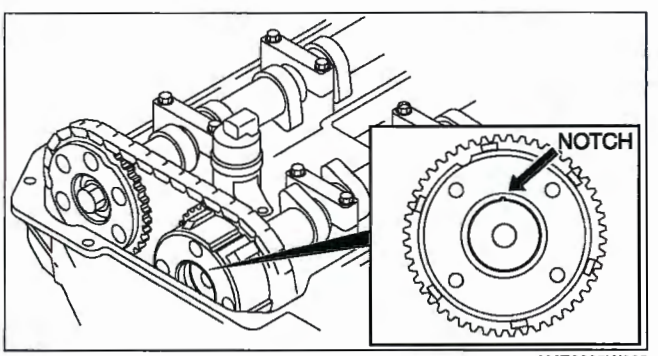

AME2225W002

8. Install the cylinder head cover. (See 01–10A–18 Cylinder Head Cover Installation Note.)
9. Install the ventilation hose.
10. Install the oil control valve (OCV) connector.
11. Install the plug hole plate. (See 01–10A–4 PLUG HOLE PLATE REMOVAL/INSTALLATION [L3].)

VARIABLE VALVE TIMING ACTUATOR REMOVAL/INSTALLATION [L3]

E6U011012490W04

Caution
- **The variable valve timing actuator cannot be disassembled because it is a precision unit.**

Note
- Intake camshaft sprocket is integrated with the variable valve timing actuator and cannot be disassembled.

1. Follow the valve clearance adjustment procedure from 1 to 20 and remove the intake camshaft and variable valve timing actuator as a single unit. (See 01–10A–6 VALVE CLEARANCE ADJUSTMENT [L3].)
2. Remove the variable valve timing actuator.
   (1) Mark the camshaft and variable valve timing actuator as shown in the figure to make sure they are installed in their original position.

   Note
   - Do not add scratch marks to the camshaft thrust area.

   (2) Secure the camshaft in a vise.
   (3) Loosen the variable valve timing actuator tightening bolt.

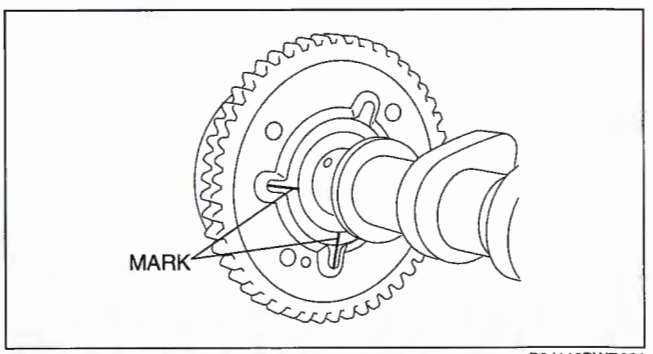

B3J110BWB001

3. Install a new washer.
4. Install the variable valve timing actuator.
   (1) Secure the camshaft in a vise.
   (2) Align the marks of the camshaft and variable valve timing actuator.

   Caution
   - **When the variable valve timing actuator is replaced with a new one, mark it in the same location as the old one.**

   (3) Tighten the variable valve timing actuator tightening bolt.

   Tightening torque
   69—75N·m {7.1—7.6 kgf·m, 50.9—55.3 ft·lbf}

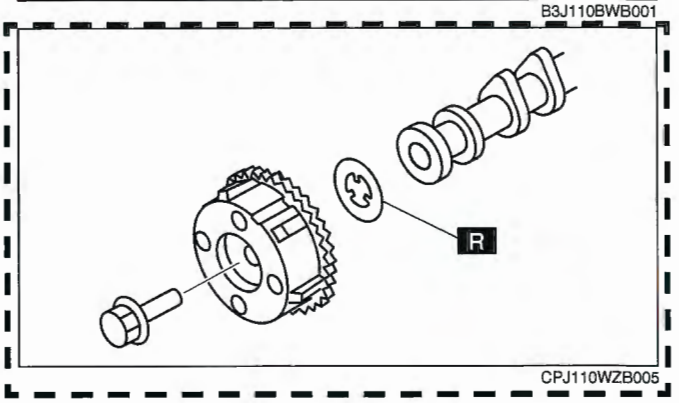

CPJ110WZB005

5. Follow the valve clearance adjustment procedure from 24 to 48 and install the intake camshaft and variable valve timing actuator. (See 01–10A–6 VALVE CLEARANCE ADJUSTMENT [L3].)

OIL CONTROL VALVE (OCV) REMOVAL/INSTALLATION [L3]

E6U011014420W03

1. Disconnect the negative battery cable.
2. Remove the plug hole plate. (See 01–10A–4 PLUG HOLE PLATE REMOVAL/INSTALLATION [L3].)
3. Remove the dipstick.
4. Remove the OCV connector.
5. Remove the ventilation hose.
6. Remove the cylinder head cover.
7. Remove the OCV.
8. Install the OCV.

   Tightening torque
   8.0—11.5 N·m {81.6—117.2 kgf·cm, 70.9—101.7 in·lbf}

9. Install the cylinder head cover. (See 01–10A–18 Cylinder Head Cover Installation Note.)
10. Install the ventilation hose.
11. Install the OCV connector.
12. Install the plug hole plate. (See 01–10A–4 PLUG HOLE PLATE REMOVAL/INSTALLATION [L3].)

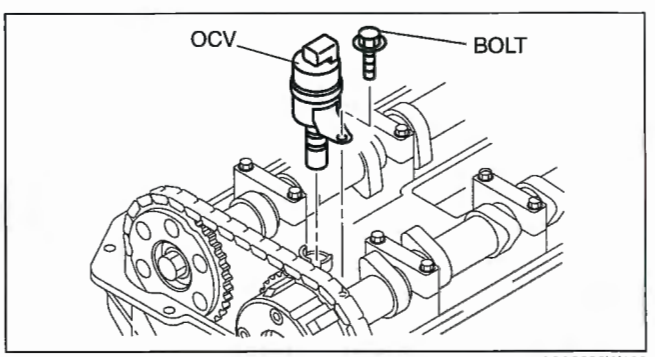

A6A2226W100

OIL CONTROL VALVE (OCV) INSPECTION [L3]

E6U011014420W04

Coil Resistance Inspection

1. Disconnect the negative battery cable.
2. Remove the plug hole plate. (See 01–10A–4 PLUG HOLE PLATE REMOVAL/INSTALLATION [L3].)
3. Remove the dipstick.
4. Disconnect the OCV connector.
5. Measure the resistance between terminals A and B using an ohmmeter.
   - If not as specified, replace the OCV.

   Specification
   6.9—7.9 ohms

6. Connect the OCV connector.
7. Install the plug hole plate. (See 01–10A–4 PLUG HOLE PLATE REMOVAL/INSTALLATION [L3].)

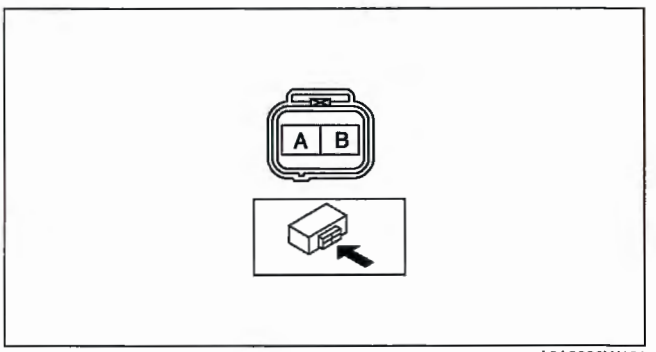

A6A2226W101

Spool Valve Operation Inspection

1. Disconnect the negative battery cable.
2. Remove the plug hole plate. (See 01–10A–4 PLUG HOLE PLATE REMOVAL/INSTALLATION [L3].)
3. Remove the OCV. (See 01–10A–4 PLUG HOLE PLATE REMOVAL/INSTALLATION [L3].)
4. Verify that the spool valve in the OCV is in the maximum valve timing retard position as indicated in the figure.
   - If not as specified, replace the OCV.
5. Verify that the battery is fully charged.
   - If not as specified, recharge the battery.

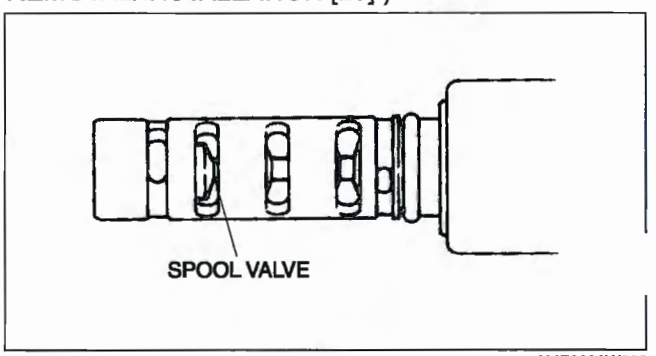

AME2226W003

6. Apply battery positive voltage between the OCV terminals and verify that the spool valve operates and moves to the maximum valve timing advance position.

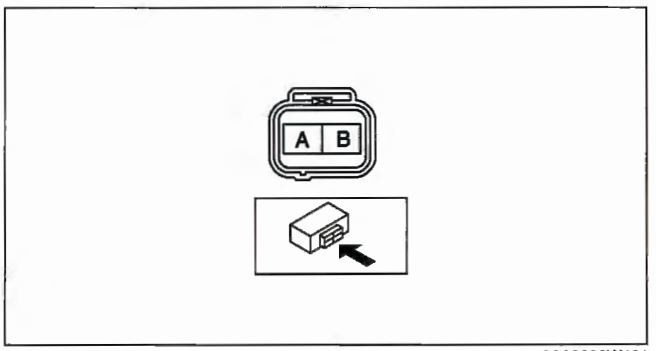

A6A2226W101

   - If not as specified, replace the OCV.

   Note
   - When applying battery positive voltage between the OCV terminals, the connection can be either of the following:
     — Positive battery cable to terminal A, negative battery cable to terminal B
     — Positive battery cable to terminal B, negative battery cable to terminal A

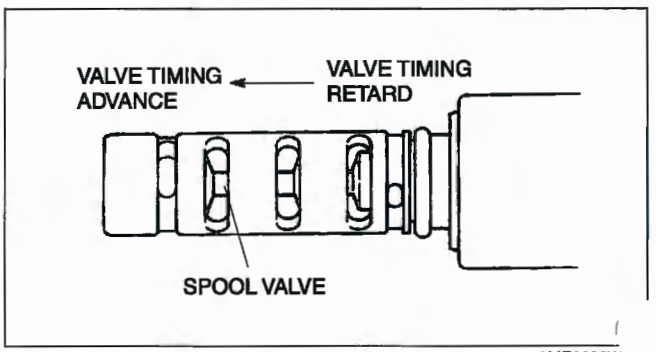

AME2226W

7. Stop applying battery positive voltage and verify that the spool valve returns to the maximum valve timing retard position.
   - If not as specified, replace the OCV.
8. Install the OCV. (See 01–10A–31 OIL CONTROL VALVE (OCV) REMOVAL/INSTALLATION [L3].)
9. Install the plug hole plate. (See 01–10A–4 PLUG HOLE PLATE REMOVAL/INSTALLATION [L3].)

01–10B MECHANICAL [L3 WITH TC]

MECHANICAL LOCATION INDEX [L3 WITH TC] 01–10B–2
DRIVE BELT INSPECTION [L3 WITH TC] 01–10B–3
DRIVE BELT REPLACEMENT [L3 WITH TC] 01–10B–3
DRIVE BELT AUTO TENSIONER INSPECTION [L3 WITH TC] 01–10B–3
VALVE CLEARANCE INSPECTION/ADJUSTMENT [L3 WITH TC] 01–10B–4
VALVE CLEARANCE INSPECTION 01–10B–4
VALVE CLEARANCE ADJUSTMENT 01–10B–5
COMPRESSION INSPECTION [L3 WITH TC] 01–10B–9
TIMING CHAIN REMOVAL/INSTALLATION [L3 WITH TC] 01–10B–10
Cylinder Head Cover Removal Note 01–10B–12
Crankshaft Pulley Lock Bolt Removal Note 01–10B–12
No.3 Engine Mount Rubber, No.3 Engine Joint Bracket Removal Note 01–10B–13
Engine Front Cover Removal Note 01–10B–14
Chain Tensioner Removal Note 01–10B–14
Oil Pump Driven Sprocket Removal Note 01–10B–15
Oil Pump Drive Sprocket Installation Note 01–10B–16
Oil Pump Driven Sprocket Installation Note 01–10B–16
Timing Chain Installation Note 01–10B–16
Front Oil Seal Installation Note 01–10B–17
Engine Front Cover Installation Note 01–10B–17
No.3 Engine Mount Rubber, No.3 Engine Joint Bracket Installation Note 01–10B–18
Crankshaft Pulley Lock Bolt Installation Note 01–10B–19
Cylinder Head Cover Installation Note 01–10B–20
CYLINDER HEAD GASKET REPLACEMENT [L3 WITH TC] 01–10B–20
Camshaft Removal Note 01–10B–22
Cylinder Head Removal Note 01–10B–22
Cylinder Head Installation Note 01–10B–22
Camshaft Installation Note 01–10B–23
FRONT OIL SEAL REPLACEMENT [L3 WITH TC] 01–10B–23
Crankshaft Pulley Lock Bolt Removal Note 01–10B–24
Front Oil Seal Removal Note 01–10B–25
Front Oil Seal Installation Note 01–10B–25
Crankshaft Pulley Lock Bolt Installation Note 01–10B–25
REAR OIL SEAL REPLACEMENT [L3 WITH TC] 01–10B–27
Rear Oil Seal Installation Note 01–10B–27
ENGINE REMOVAL/INSTALLATION [L3 WITH TC] 01–10B–28
No.1 Engine Mount Rubber Removal Note 01–10B–30
No.4 Engine Mount Bracket, No.4 Engine Mount Rubber Removal Note 01–10B–30
No.3 Engine Joint Bracket Installation Note 01–10B–32
No.4 Engine Mount Bracket, No.4 Engine Mount Rubber Installation Note 01–10B–34
No.1 Engine Mount Bracket Installation Note 01–10B–35
No.1 Engine Mount Rubber Installation Note 01–10B–35
ENGINE DISASSEMBLY/ASSEMBLY [L3 WITH TC] 01–10B–35
VARIABLE VALVE TIMING ACTUATORE REMOVAL/INSTALLATION [L3 WITH TC] 01–10B–36
VARIABLE VALVE TIMING ACTUATOR INSPECTION [L3 WITH TC] 01–10B–37
OIL CONTROL VALVE (OCV) REMOVAL/INSTALLATION [L3 WITH TC] 01–10B–37
OIL CONTROL VALVE (OCV) INSPECTION [L3 WITH TC] 01–10B–38
Unable to Keep Idling 01–10B–38
Able to Keep Idling 01–10B–38
Coil Resistance Inspection 01–10B–39
Spool Valve Operation Inspection 01–10B–39
ENGINE TUNE-UP [L3 WITH TC] 01–10B–40
Ignition Timing Inspection 01–10B–40
Idle Speed Inspection 01–10B–40
Idle Mixture Inspection 01–10B–40

MECHANICAL LOCATION INDEX [L3 WITH TC]

E6U011002000W13

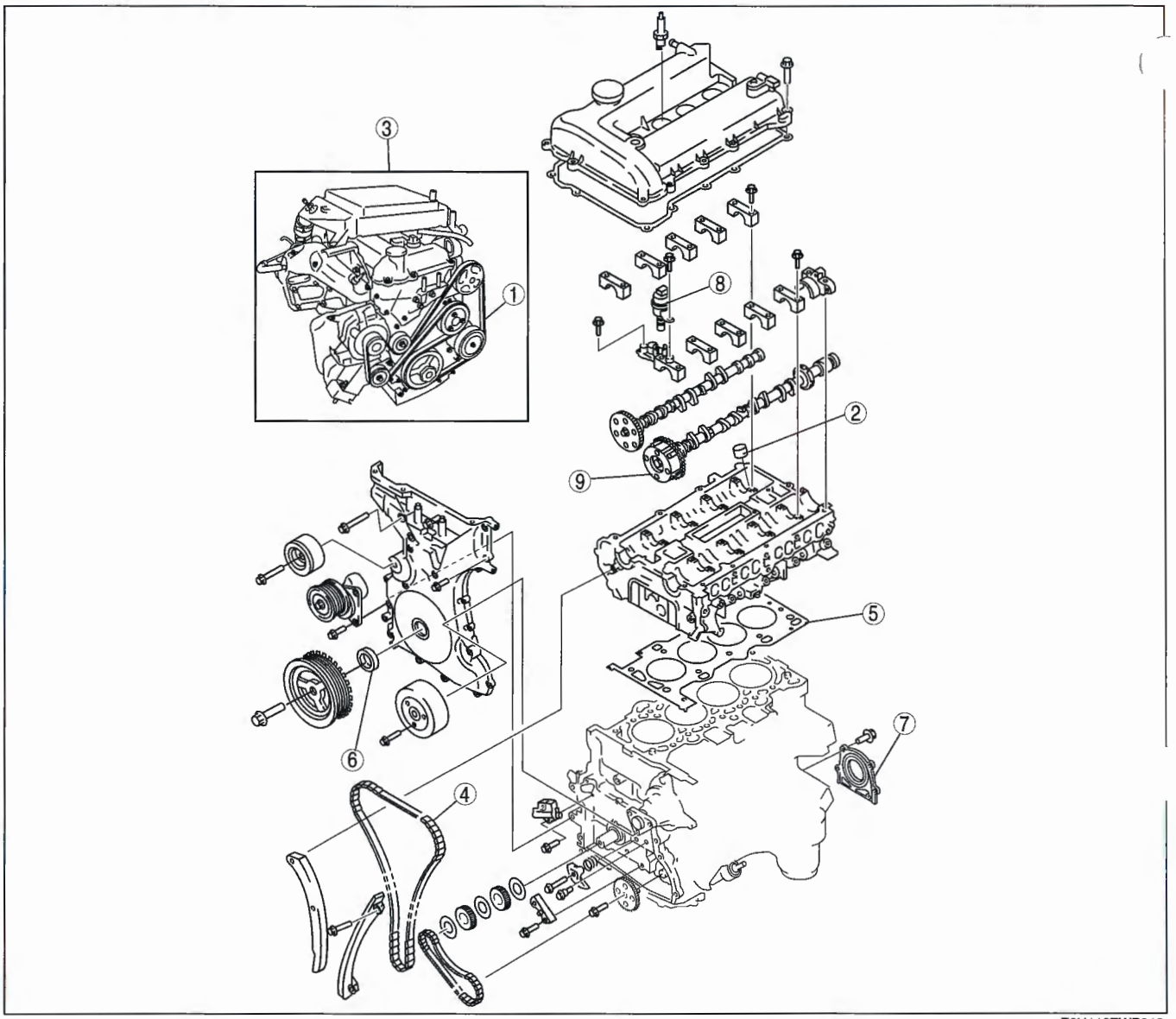

E6U110ZWB013

1	Drive belt (See 01–10B–3 DRIVE BELT INSPECTION [L3 WITH TC].) (See 01–10B–3 DRIVE BELT REPLACEMENT [L3 WITH TC].) (See 01–10B–3 DRIVE BELT AUTO TENSIONER INSPECTION [L3 WITH TC].)
2	Tappet (See 01–10B–4 VALVE CLEARANCE INSPECTION/ADJUSTMENT [L3 WITH TC].)
3	Engine (See 01–10B–9 COMPRESSION INSPECTION [L3 WITH TC].) (See 01–10B–28 ENGINE REMOVAL/ INSTALLATION [L3 WITH TC].) (See 01–10B–35 ENGINE DISASSEMBLY/ ASSEMBLY [L3 WITH TC].)
4	Timing chain (See 01–10B–10 TIMING CHAIN REMOVAL/ INSTALLATION [L3 WITH TC].)

5	Cylinder head gasket (See 01–10B–20 CYLINDER HEAD GASKET REPLACEMENT [L3 WITH TC].)
6	Front oil seal (See 01–10B–23 FRONT OIL SEAL REPLACEMENT [L3 WITH TC].)
7	Rear oil seal (See 01–10B–27 REAR OIL SEAL REPLACEMENT [L3 WITH TC].)
8	Oil control valve (OCV) (See 01–10B–37 OIL CONTROL VALVE (OCV) REMOVAL/INSTALLATION [L3 WITH TC].) (See 01–10B–38 OIL CONTROL VALVE (OCV) INSPECTION [L3 WITH TC].)
9	Variable valve timing actuator (See 01–10B–36 VARIABLE VALVE TIMING ACTUATORE REMOVAL/INSTALLATION [L3 WITH TC].) (See 01–10B–37 VARIABLE VALVE TIMING ACTUATOR INSPECTION [L3 WITH TC].)

DRIVE BELT INSPECTION [L3 WITH TC]

E6U011015800W05

Note
- Drive belt deflection/tension inspection is not necessary because of the use of the drive belt auto tensioner.

1. Verify that the drive belt auto tensioner indicator mark does not exceed the limit.
   - If it exceeds the limit, replace the drive belt. (See 01–10B–3 DRIVE BELT REPLACEMENT [L3 WITH TC].)

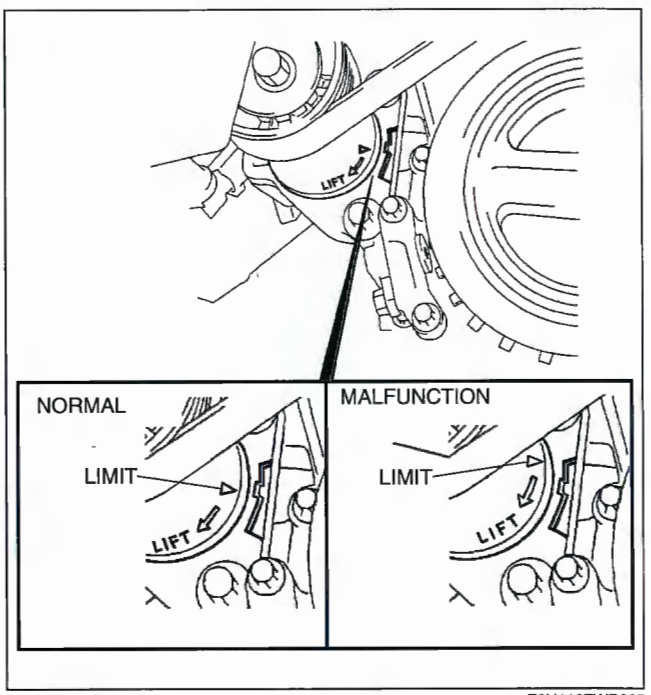

E6U110ZWB035

IVE BELT REPLACEMENT [L3 WITH TC]

E6U011015800W06

1. Remove the splash shield (RH).
2. Rotate the drive belt auto tensioner in the direction shown in the figure and remove the drive belt.
3. Install a new drive belt.
4. Verify that the drive belt auto tensioner indicator mark does not exceed the limit. (See 01–10B–3 DRIVE BELT INSPECTION [L3 WITH TC].)
5. Install the splash shield (RH).

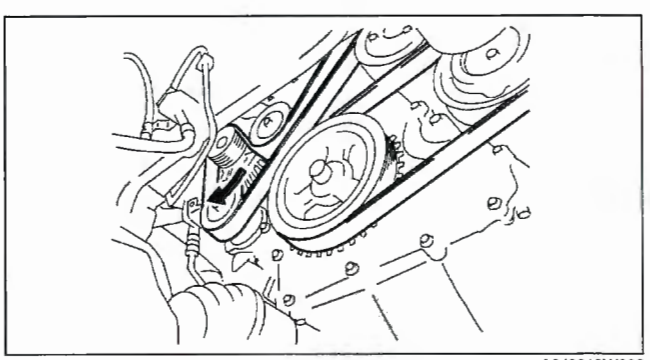

A6J2210W002

DRIVE BELT AUTO TENSIONER INSPECTION [L3 WITH TC]

E6U011015980W03

1. Remove the drive belt. (See 01–10B–3 DRIVE BELT REPLACEMENT [L3 WITH TC].)
2. Verify that the drive belt auto tensioner moves smoothly in the operational direction.
   - Replace the drive belt auto tensioner if necessary.
3. Rotate the drive belt auto tensioner pulley by hand and verify that it rotates smoothly.
   - Replace the drive belt auto tensioner if necessary.
4. Install the drive belt. (See 01–10B–3 DRIVE BELT REPLACEMENT [L3 WITH TC].)

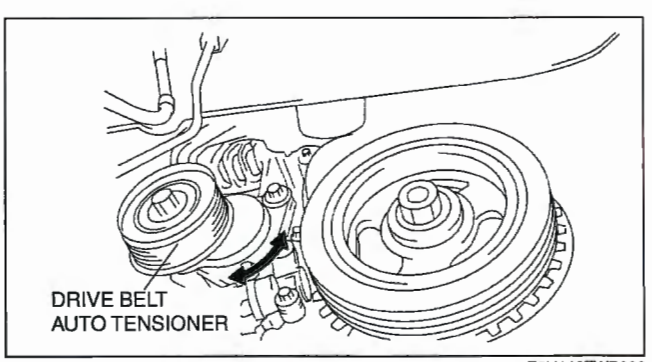

E6U110ZWB036

VALVE CLEARANCE INSPECTION/ADJUSTMENT [L3 WITH TC]

E6U011002000W14

VALVE CLEARANCE INSPECTION

1. Disconnect the negative battery cable.
2. Remove the front tire (RH).
3. Remove the under cover.
4. Remove the splash shield (RH).
5. Remove the charge air cooler. (See01–13B–4 INTAKE AIR SYSTEM REMOVAL/INSTALLATION [L3 WITH TC].)
6. Remove the high pressure fuel pump. (See 01–14B–18 HIGH PRESSURE FUEL PUMP REMOVAL/ INSTALLATION [L3 WITH TC].)
7. Remove the ignition coils. (See 01–18B–2 IGNITION COIL REMOVAL/INSTALLATION [L3 WITH TC].)
8. Disconnect the OCV connector.
9. Disconnect the CMP sensor connector.
10. Disconnect the P/S oil pump connector.
11. Remove the ventilation hose.
12. Remove the cylinder head cover. (See 01–10B–12 Cylinder Head Cover Removal Note.)
13. Measure the valve clearance.
    (1) Rotate the crankshaft clockwise so that the No.1 cylinder is at TDC of the compression stroke.
    (2) Measure the valve clearance of location A shown in the figure.

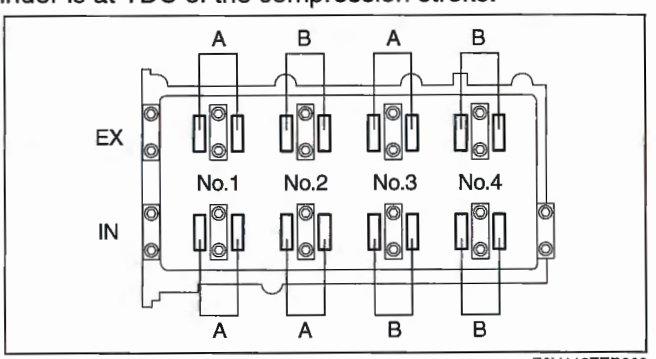

E6U110ZEB002

Standard valve clearance [Engine cold]
IN: 0.22—0.28 mm {0.0087—0.0110 in}
EX: 0.27—0.33 mm {0.0107—0.0129 in}

    (3) If it is not within the specification, replace the tappet and adjust the valve clearance to the median value of the standard (See 01–10B–5 VALVE CLEARANCE ADJUSTMENT)

Note
- Make sure to note down the measured values for choosing the suitable replacement tappets.

    (4) Rotate the crankshaft clockwise **360°** so that the No.4 cylinder is at TDC of the compression stroke.
    (5) Measure the valve clearance of location B shown in the figure.

Standard valve clearance [Engine cold]
IN: 0.22—0.28 mm {0.0087—0.0110 in}
EX: 0.27—0.33 mm {0.0107—0.0129 in}

    (6) If not within the specification, replace the tappet and adjust the valve clearance to the median value of the standard (See 01–10B–5 VALVE CLEARANCE ADJUSTMENT)
14. Install the cylinder head cover. (See 01–10B–12 Cylinder Head Cover Removal Note.)
15. Install the ventilation hose.
16. Connect the P/S oil pump connector.
17. Connect the CMP sensor connector.
18. Connect the OCV connector.
19. Install the ignition coils. (See 01–18B–2 IGNITION COIL REMOVAL/INSTALLATION [L3 WITH TC].)
20. Install the high pressure fuel pump. (See 01–14B–18 HIGH PRESSURE FUEL PUMP REMOVAL/ INSTALLATION [L3 WITH TC].)
21. Install the charge air cooler. (See01–13B–4 INTAKE AIR SYSTEM REMOVAL/INSTALLATION [L3 WITH TC].)
22. Install the splash shield (RH).
23. Install the under cover.
24. Install the front tire (RH).
25. Connect the negative battery cable.
26. Bleed the air from the cooling system. (See01–12B–4 ENGINE COOLANT REPLACEMENT [L3 WITH TC].)

VALVE CLEARANCE ADJUSTMENT

1. Disconnect the negative battery cable.
2. Remove the front tire (RH).
3. Remove the under cover.
   Remove the splash shield (RH).
4. Remove the charge air cooler. (See01–13B–4 INTAKE AIR SYSTEM REMOVAL/INSTALLATION [L3 WITH TC].)
5. Remove the high pressure fuel pump. (See 01–14B–18 HIGH PRESSURE FUEL PUMP REMOVAL/INSTALLATION [L3 WITH TC].)
6. Remove the ignition coils. (See 01–18B–2 IGNITION COIL REMOVAL/INSTALLATION [L3 WITH TC].)
7. Disconnect the OCV connector.
8. Disconnect the CMP sensor connector.
9. Disconnect the P/S oil pump connector.
10. Remove the ventilation hose.
11. Remove the cylinder head cover. (See 01–10B–12 Cylinder Head Cover Removal Note.)
12. Remove the drive belt. (See 01–10B–3 DRIVE BELT REPLACEMENT [L3 WITH TC].)
13. Disconnect the front drive shaft (RH) from the joint shaft. (See 03–13–16 FRONT DRIVE SHAFT REMOVAL/INSTALLATION [L3, L3 WITH TC].)
14. Remove the engine front cover lower blind plug.
15. Remove the engine front cover upper blind plug.

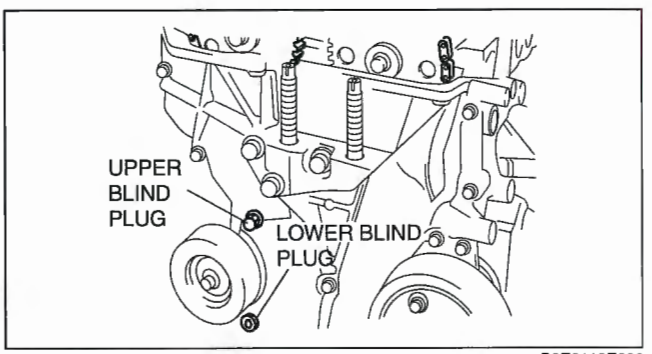

B3E0110E093

16. Remove the cylinder block lower blind plug, and install the **SST**.
    Rotate the crankshaft clockwise so that the No.1 cylinder is at TDC of the compression stroke.
    (The position crank weight contacts the **SST**.)

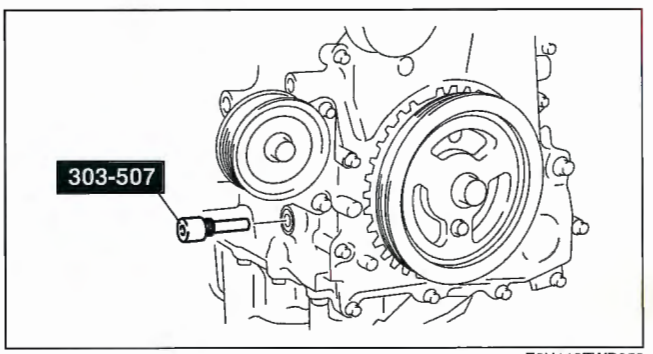

E6U110ZWB050

17. Release the tension on the timing chain.
    (1) Using a suitable screwdriver or equivalent tool, unlock the chain tensioner ratchet.

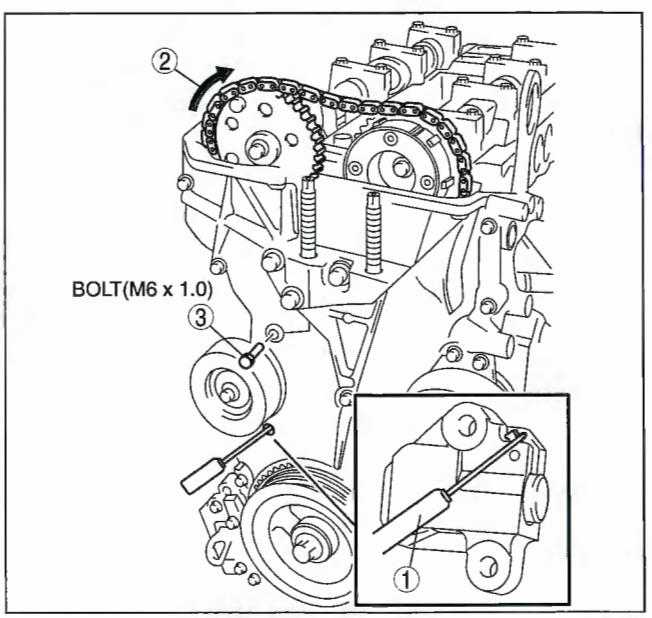

E6U110ZWB052

(2) Rotate the exhaust camshaft clockwise using a suitable wrench on the cast hexagon and loosen the tension on the timing chain.
(3) Using a suitable bolt **(M6 X 1.0 length 25mm—35mm {0.99—1.37 in})** at the engine front cover upper blind plug, secure the tensioner arm at the position where the tension is released.

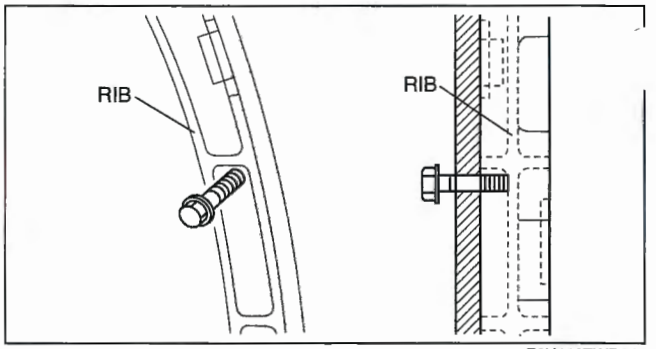

E6U110ZWB045

20. Fix the exhaust camshaft using a wrench on the cast hexagon, and loosen the camshaft sprocket installation bolt.

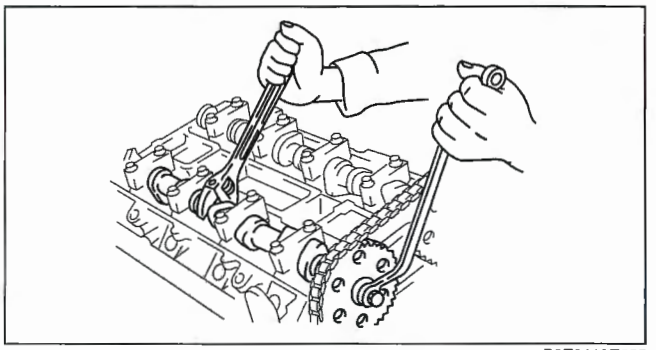
B3E0110E095

21. Remove the installation bolt and remove the exhaust camshaft sprocket.

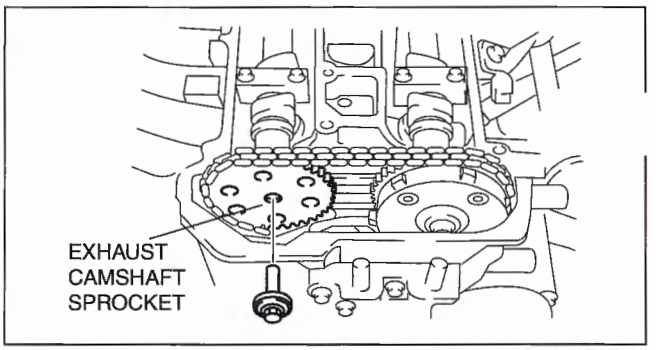

E6U110ZWB008

22. Loosen the camshaft cap bolts in two or three passes in the order shown in the figure and remove the camshaft cap.

Note
- The camshaft caps are to be kept ordered for correct reassembly in their original positions. Do not mix the caps.

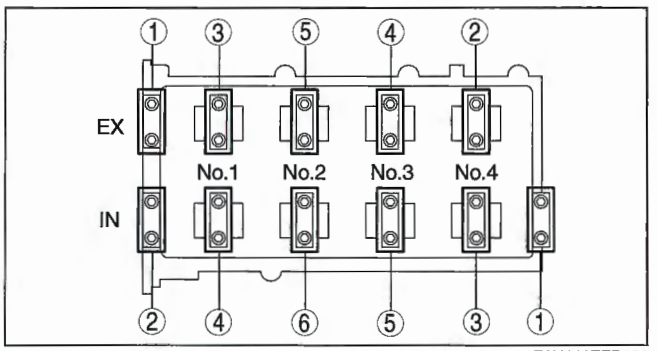

E6U110ZEB001

23. Remove the camshafts for the intake and exhaust sides.
24. Remove the tappet.
25. Install an appropriate tappet based on the results of the valve clearance inspection.
Selected tappet = Removed tappet thickness + Measured valve clearance - Standard valve clearance

Standard valve clearance [Engine cold]
IN: 0.22—0.28 mm {0.0087—0.0110 in}
EX: 0.27—0.33 mm {0.0107—0.0129 in}

26. Install the camshaft with No.1 cylinder cam aligned at TDC of the compression stroke.

27. Carefully apply adhesive agent to the area indicated in the figure so that it does not leak into the sliding part.

Thickness
1.0 mm {0.039 in}

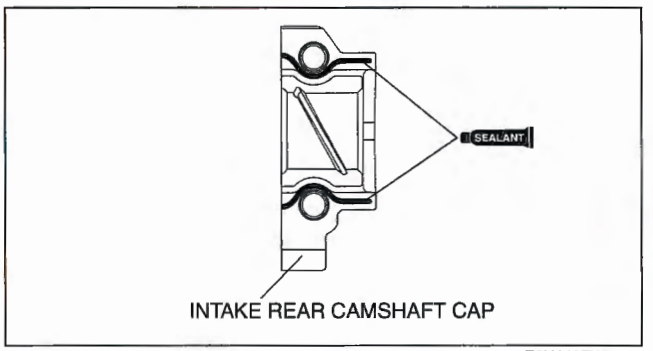

E6U110ZWB063

28. Install the camshaft caps and temporarily tighten the camshaft cap bolts evenly in two or three passes, and then tighten the camshaft cap bolts in two passes, using the following two steps and in the order shown in the figure.

Tightening procedure
(1) 5.0—9.0 N·m {51.0—91.7 kgf·cm, 44.3—79.6 in·lbf}
(2) 14.0—17.0 N·m {1.5—1.7 kgf·m, 10.4—12.5 ft·lbf

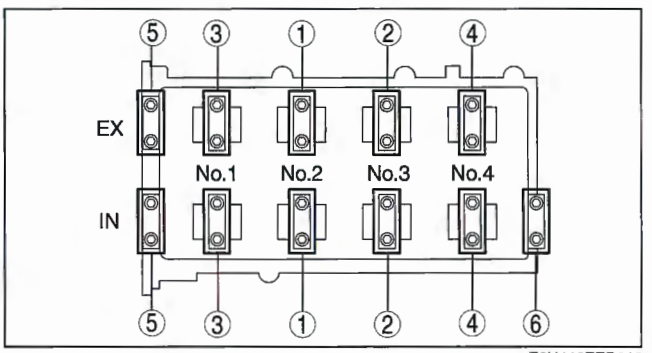

E6U110ZEB012

29. Install a new washer.

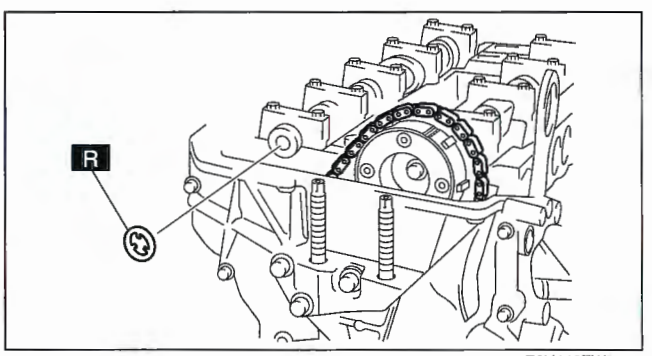

E6U110ZWB020

30. Install the exhaust camshaft sprocket.

Caution
- **Do not tighten the camshaft sprocket installation bolt at this stage. Verify the valve timing before performing the bolt tightening.**

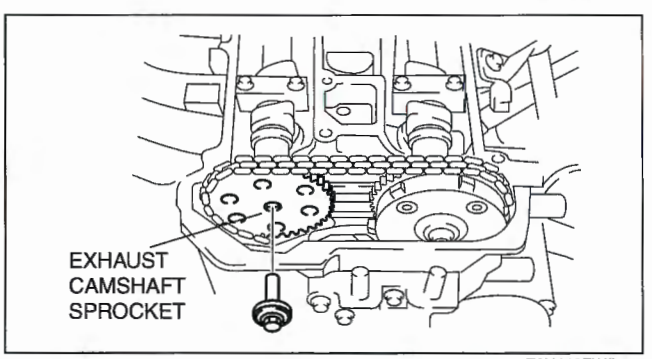

E6U110ZWB008

31. Install the **SST** on the camshaft as shown in the figure.
32. Remove the installation bolt for the engine front cover upper blind plug (**M6 X 1.0 length 25—35mm {0.99—1.37 in}**), and apply tension to the timing chain.
33. Rotate the crankshaft clockwise and verify that the No.1 cylinder is at TDC of the compression stroke. (The position crank weight contacts the **SST**.)

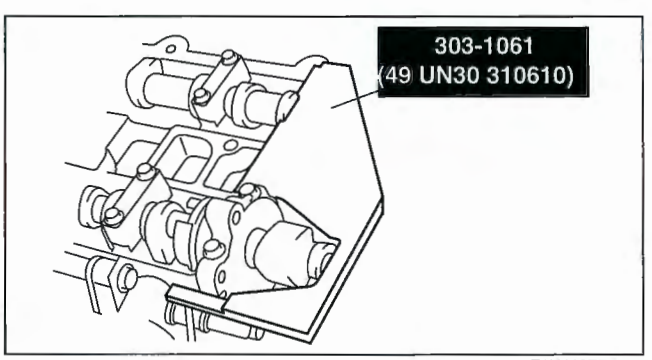

E6U110ZEB036

34. Fix the exhaust camshaft using a wrench on the cast hexagon, and tighten the sprocket installation bolt.

    Tightening torque
    69—75 N·m {7.1—7.6 kgf·m, 50.9—55.3 ft·lbf}

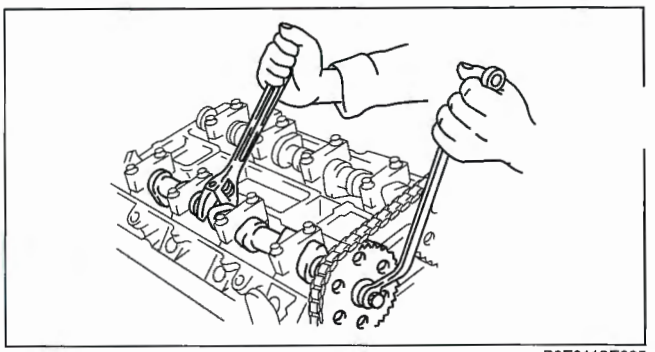
B3E0110E095

35. Remove the **SST** from the camshaft.
36. Remove the **SST** installed in the cylinder block lower blind plug hole.
37. Rotate the crankshaft clockwise two turns and inspect the valve timing.
    - If it is not aligned, repeat the procedure.
38. Apply the silicone sealant and install the engine front cover upper blind plug.

    Tightening torque
    8.0—11.5 N·m {81.6—117.2 kgf·cm, 70.9—101.7 in·lbf}

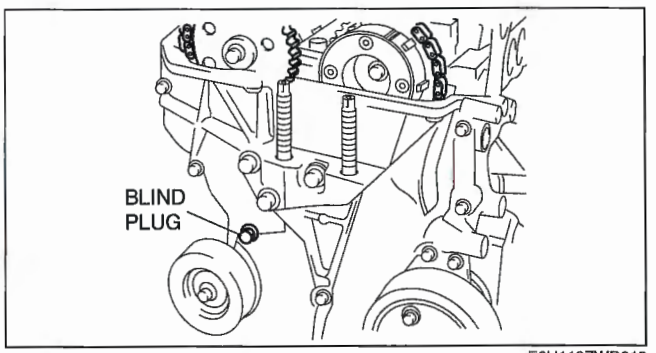

E6U110ZWB018

39. Install the cylinder block lower blind plug.

    Tightening torque
    18—22 N·m {1.9—2.2 kgf·m, 13.3—16.2 ft·lbf}

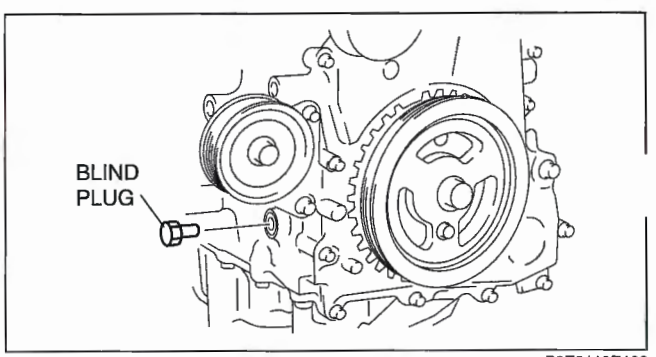

B3E0110E102

40. Install a new engine front cover lower blind plug.

    Tightening torque
    10.0—14.0 N·m {102.0—142.7 kgf·cm, 73.8—103.2 in·lbf}

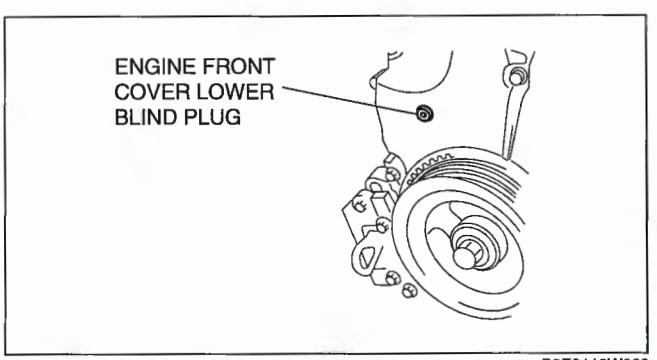

B3E0110W063

41. Connect the front drive shaft (RH) with the joint shaft. (See 03–13–16 FRONT DRIVE SHAFT REMOVAL/INSTALLATION [L3, L3 WITH TC].)
42. Install the drive belt. (See 01–10B–3 DRIVE BELT REPLACEMENT [L3 WITH TC].)
43. Install the cylinder head cover. (See 01–10B–20 Cylinder Head Cover Installation Note.)
44. Install the ventilation hose.
45. Connect the P/S oil pump connector.
46. Connect the CMP sensor connector.
47. Connect the OCV connector.
48. Install the ignition coils. (See 01–18B–2 IGNITION COIL REMOVAL/INSTALLATION [L3 WITH TC].)
49. Install the high pressure fuel pump. (See 01–14B–18 HIGH PRESSURE FUEL PUMP REMOVAL/INSTALLATION [L3 WITH TC].)
50. Install the charge air cooler. (See01–13B–4 INTAKE AIR SYSTEM REMOVAL/INSTALLATION [L3 WITH TC
51. Install the splash shield (RH).
52. Install the under cover.
53. Install the front tire (RH).
54. Connect the negative battery cable.
55. Bleed the air from the cooling system. (See01–12B–4 ENGINE COOLANT REPLACEMENT [L3 WITH TC].)

COMPRESSION INSPECTION [L3 WITH TC]

E6U011002000W15

Warning
- **Hot engines can cause severe burns. Be careful not to burn yourself during removal/installation of each component.**
- **Fuel vapor is hazardous. It can very easily ignite, causing death, serious injury, or damage. Always keep sparks and flames away from fuel.**

1. Verify that the battery is completely charged. (See 01–17B–2 BATTERY INSPECTION [L3 WITH TC].)
2. Warm up the engine.

Warning
- **Fuel line spills and leakage from the pressurized fuel system are dangerous. Fuel can easily ignite and cause serious injury or death and damage. Fuel can also irritate skin and eyes. To prevent this, always perform the Fuel Line Safety Procedure. (See 01–14B–4 BEFORE REPAIR PROCEDURE [L3 WITH TC].)**

3. Remove the charge air cooler.
4. Remove the ignition coils. (See 01–18B–2 IGNITION COIL REMOVAL/INSTALLATION [L3 WITH TC].)
5. Remove all the spark plugs. (See 01–18B–3 SPARK PLUG REMOVAL/INSTALLATION [L3 WITH TC])
6. Remove the fuel pump relay. (See 01–14B–4 BEFORE REPAIR PROCEDURE [L3 WITH TC].)
7. Disconnect the injector driver module connectors. (See 01–40B–21 INJECTOR DRIVER MODULE REMOVAL/INSTALLATION [L3 WITH TC].)
8. Measure the compression pressure using the following procedure.
   (1) Press the compression gauge into the spark plug hole.
   (2) Fully open the throttle valve.
   (3) Crank the engine and measure the compression pressure.

   Compression
   Standard:1,280 kPa {13.1 kgf/cm^2, 185.65 psi} [250rpm]
   Minimum:896 kPa {9.14 kgf/cm^2, 129.96 psi} [250rpm]
   Maximum difference between cylinders:196.1 kPa {2.0 kgf/cm^2, 28.5 psi}

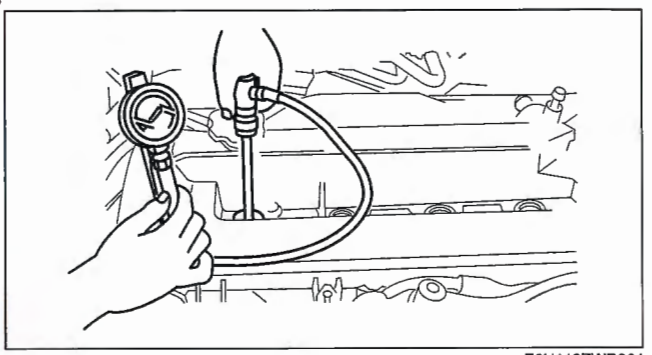

E6U110ZWB064

   (4) Perform Steps (1) to (3) for all cylinders.
   (5) If it is less than the minimum specification, or there is a cylinder with a compression value that differs from that of other cylinders by **196.1 kPa or more {2.0 kgf/cm^2, 28.5 psi}**, add a small quantity of engine oil through the spark plug hole and perform Steps (1) to (3).
      - If the pressure increases by adding the engine oil, the piston ring or the the cylinder surface is worn, or they are damaged. Perform overhaul servicing.
      - If the pressure does not increase, valve seizure, valve attachment failure, or pressure leakage from the cylinder head gasket might be occurring. Perform overhaul servicing.
9. connect the injector driver module connectors. (See 01–40B–21 INJECTOR DRIVER MODULE REMOVAL/INSTALLATION [L3 WITH TC].)
10. Install the fuel pump relay. (See 01–14B–4 BEFORE REPAIR PROCEDURE [L3 WITH TC].)
11. Install the spark plugs. (See 01–18B–3 SPARK PLUG REMOVAL/INSTALLATION [L3 WITH TC])
12. Install the ignition coils. (See 01–18B–2 IGNITION COIL REMOVAL/INSTALLATION [L3 WITH TC].)
13. Install the charge air cooler.

TIMING CHAIN REMOVAL/INSTALLATION [L3 WITH TC]

E6U011012201W03

1. Disconnect the negative battery cable.
2. Remove the under cover.
3. Remove the front tire (RH).
4. Remove the splash shield (RH).
5. Remove the charge air cooler. (See01–13B–4 INTAKE AIR SYSTEM REMOVAL/INSTALLATION [L3 WITH TC].)
6. Remove the high pressure fuel pump. (See 01–14B–18 HIGH PRESSURE FUEL PUMP REMOVAL/INSTALLATION [L3 WITH TC].)
7. Remove the ignition coils. (See 01–18B–2 IGNITION COIL REMOVAL/INSTALLATION [L3 WITH TC].)
8. Disconnect the OCV connector.
9. Disconnect the CMP sensor connector.
10. Disconnect the P/S oil pump connector.
11. Remove the ventilation hose.
12. Remove the cylinder head cover. (See 01–10B–12 Cylinder Head Cover Removal Note.)
13. Loosen the water pump pulley installation bolt and remove the drive belt. (See 01–10B–3 DRIVE BELT REPLACEMENT [L3 WITH TC].)
14. Remove the CKP sensor. (See 01–40B–41 CRANKSHAFT POSITION (CKP) SENSOR REMOVAL/INSTALLATION [L3 WITH TC].)
15. Remove the P/S oil pump with the hoses and pipes still connected. (See 06–12–27 POWER STEERING OIL PUMP REMOVAL/INSTALLATION [L3, L3 WITH TC].)

Note

- Position and secure the P/S oil pump out of the way with a rope or wire.

16. Disconnect the front drive shaft (RH) from the joint shaft. (See 03–13–16 FRONT DRIVE SHAFT REMOVAL/INSTALLATION [L3, L3 WITH TC].)

17. Remove in the order indicated in the figure.
18. Install in the reverse order of removal.
19. Start the engine and inspect and adjust the following:
    (1) Bleed the air from the cooling system. (See01–12B–4 ENGINE COOLANT REPLACEMENT [L3 WITH TC].)
    (2) Engine oil amount (See 01–11B–2 ENGINE OIL LEVEL INSPECTION [L3 WITH TC].)
    (3) Runout and contact of pulley and belt.
    (4) Ignition timing, idle speed, and idle mixture (CO and HC) verification (See 01–10B–40 ENGINE TUNE-UP [L3 WITH TC].)
20. Perform a road test and verify that there is no abnormal vibration or noise.

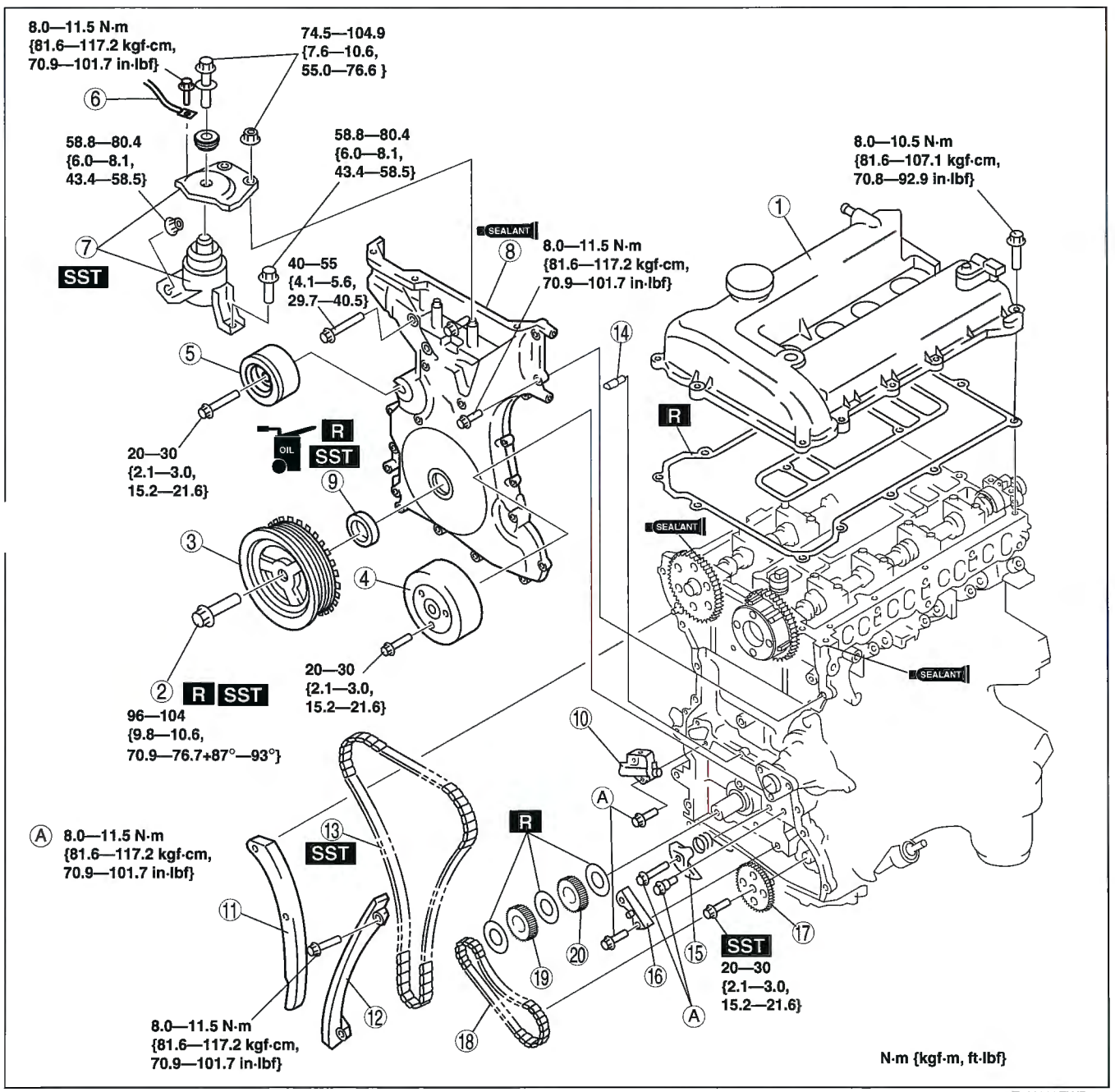

E6U110ZWB015

1	Cylinder head cover (See 01–10B–12 Cylinder Head Cover Removal Note.) (See 01–10B–20 Cylinder Head Cover Installation Note.)
2	Crankshaft pulley lock bolt (See 01–10B–12 Crankshaft Pulley Lock Bolt Removal Note.) (See 01–10B–19 Crankshaft Pulley Lock Bolt Installation Note.)
3	Crankshaft pulley
4	Water pump pulley
5	Front drive belt idler pulley
6	Engine ground
7	No. 3 engine mount rubber, No. 3 Engine joint bracket (See 01–10B–13 No.3 Engine Mount Rubber, No.3 Engine Joint Bracket Removal Note.) (See 01–10B–18 No.3 Engine Mount Rubber, No.3 Engine Joint Bracket Installation Note)
8	Engine front cover (See 01–10B–17 Engine Front Cover Installation Note.)
9	Front oil seal (See 01–10B–14 Engine Front Cover Removal Note.) (See 01–10B–17 Front Oil Seal Installation Note.)
10	Chain tensioner (See 01–10B–14 Chain Tensioner Removal Note.)
11	Tensioner arm
12	Chain guide
13	Timing chain (See 01–10B–16 Timing Chain Installation Note.)
14	Oil jet
15	Oil pump chain tensioner
16	Oil pump chain guide
17	Oil pump driven sprocket (See 01–10B–15 Oil Pump Driven Sprocket Removal Note.) (See 01–10B–16 Oil Pump Driven Sprocket Installation Note.)
18	Oil pump chain
19	Crankshaft sprocket
20	Oil pump drive sprocket (See 01–10B–16 Oil Pump Drive Sprocket Installation Note.)

Cylinder Head Cover Removal Note

1. Loosen the cylinder head cover bolts in the order shown in the figure.

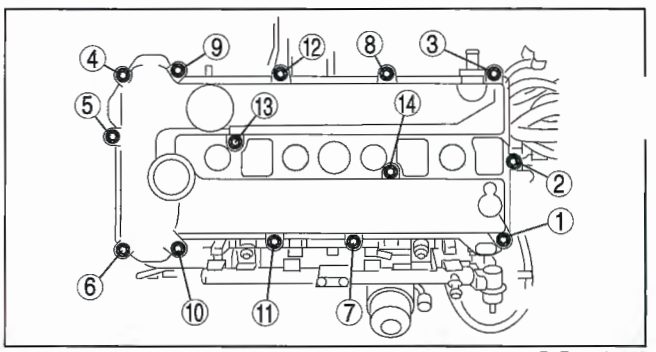

B3E0110W250

Crankshaft Pulley Lock Bolt Removal Note

1. Remove the cylinder block lower blind plug and install the **SST.**
2. Rotate the crankshaft clockwise so that the No.1 cylinder is at TDC of the compression stroke. (Position crank weight contacts **SST**.)

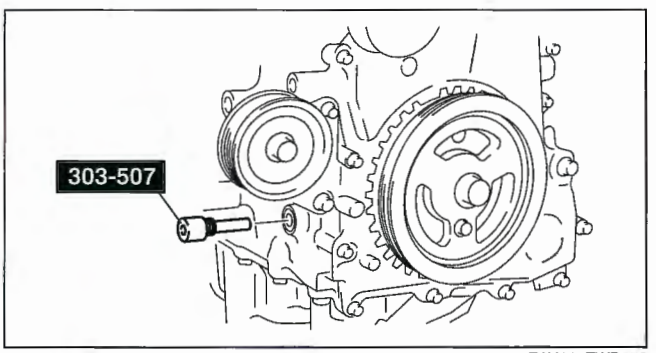

E6U110ZWB050

3. Install the **SST** to the crankshaft pulley and lock the crankshaft against rotation.

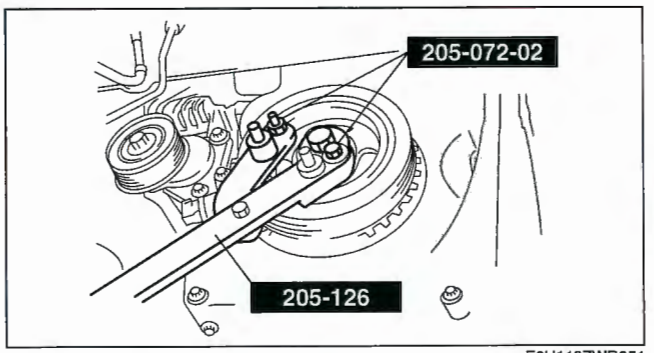

E6U110ZWB051

No.3 Engine Mount Rubber, No.3 Engine Joint Bracket Removal Note

1. Remove the air cleaner. (See 01–13B–4 INTAKE AIR SYSTEM REMOVAL/INSTALLATION [L3 WITH TC].)
2. Install the **SST** using the following procedure.

Caution

- **Refer to the SST instruction manual for the basic handing procedure.**

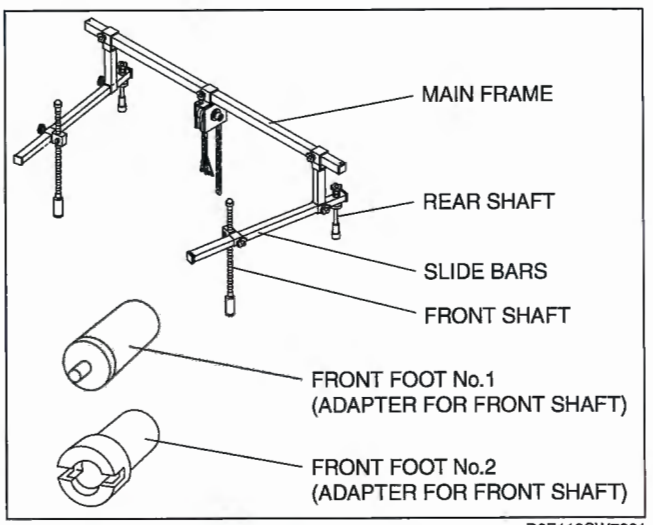

D6E110CW7001

(1) Install the right rear shaft of the **SST** to the bolt of the right shock absorber as shown in the figure.
(2) Install the left rear shaft of the **SST** to the bolt of the left shock absorber. (Identical position to the right side)

Caution

- **When setting the SST on the right side, make sure it doesn't interfere with the DSC HU/CM.**

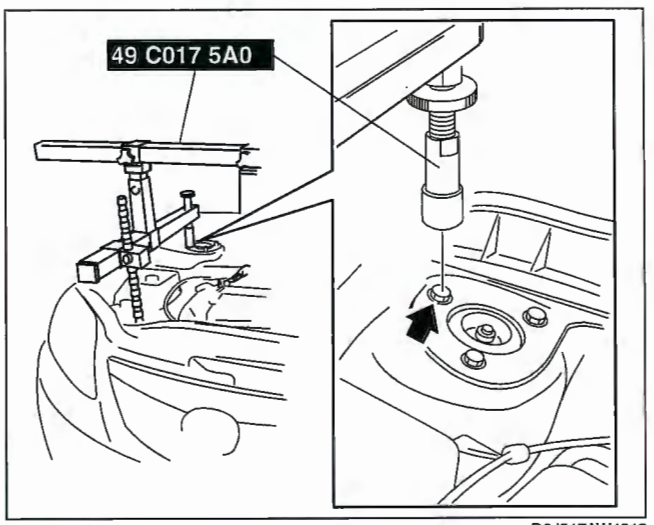

D6J517AW4012

(3) Install the left/right front shaft of the **SST** with front foot No.2 to the bolt as shown in the figure.
(4) Adjust the positions of the **SST** side bars so that they are the same height (left and right) and horizontal.
(5) Make sure each joint is securely tightened.

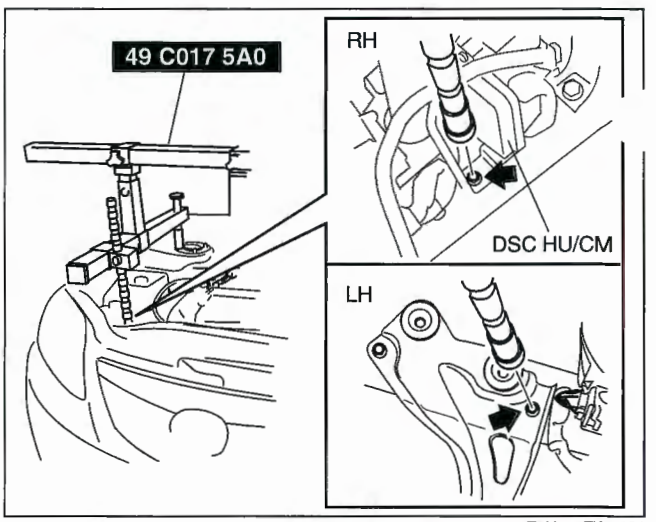

E6U515ZW7001

3. Support the engine using the **SST**.

Note
- The SST (49 E017 5A0) can be used in place of the SST (49 C017 5A0).

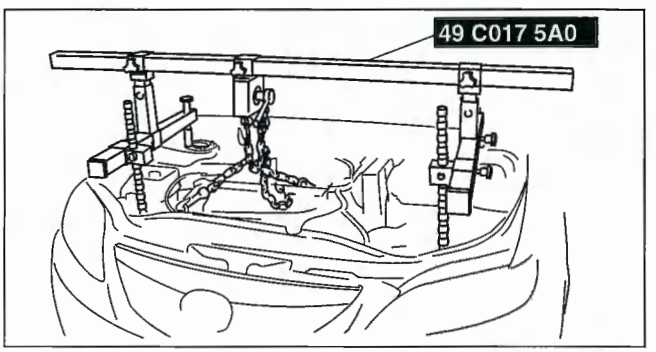

D6J517AW4014

Engine Front Cover Removal Note
1. Remove the front oil seal using a flathead screwdriver or similar tool.

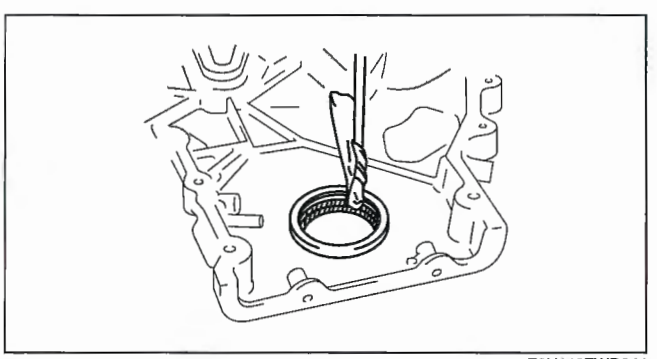
E6U110ZWB044

Chain Tensioner Removal Note
1. Press the timing chain tensioner ratchet to the left using a thin flathead screwdriver (precision screwdriver) to unlock the plunger.

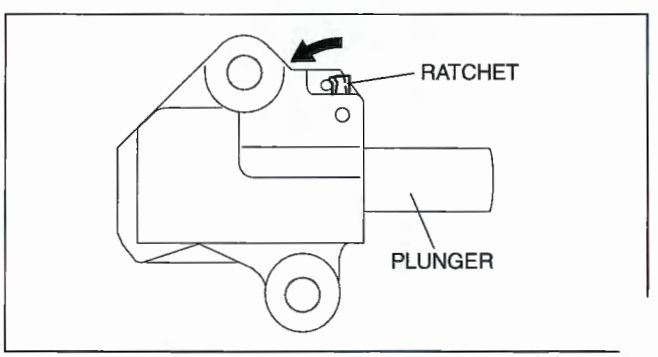

E6U110ZWB054

2. Slowly press the plunger back in the direction shown in the figure while pressing the ratchet.

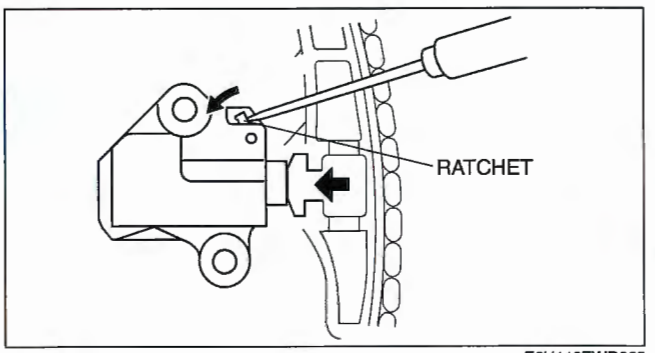

E6U110ZWB055

3. Release the ratchet with the plunger still pressed down.

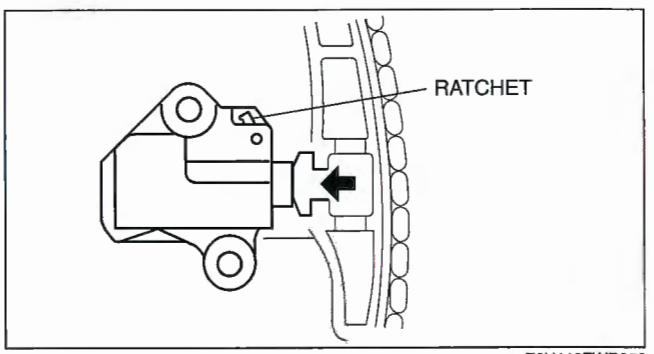

E6U110ZWB056

4. Press-in the plunger until the ratchet position is as indicated in the figure, and then insert the wire to lock the plunger.

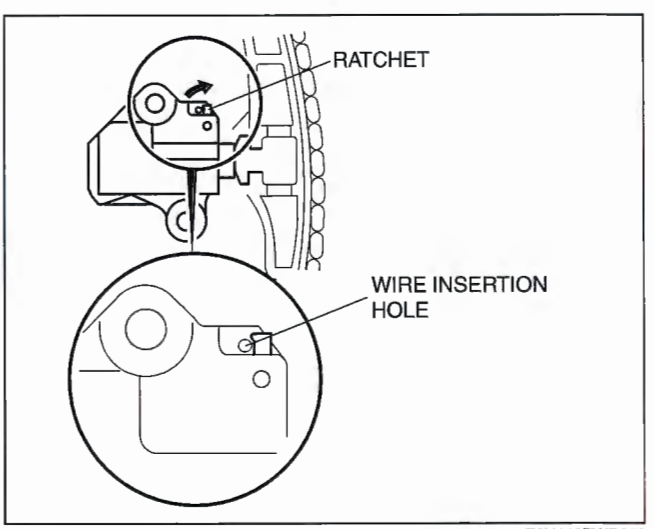

E6U110ZWB053

Oil Pump Driven Sprocket Removal Note

1. Install the **SSTs** to the oil pump driven sprocket, and lock it against rotation.

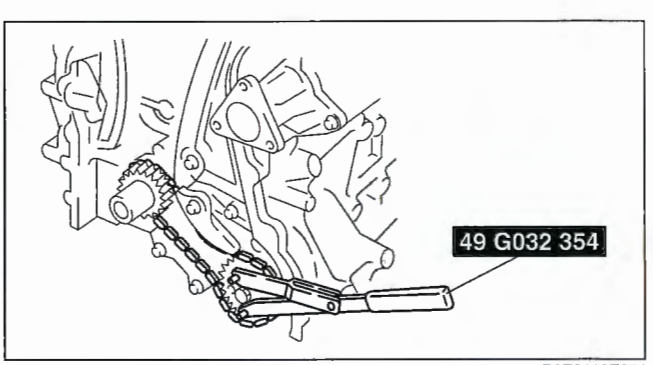

B3E0110E054

Oil Pump Drive Sprocket Installation Note

1. The oil pump drive sprocket has the assembly direction as shown in the figure.

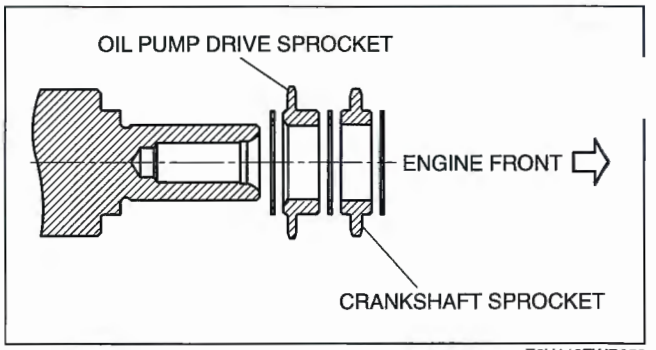

E6U110ZWB059

Oil Pump Driven Sprocket Installation Note

1. Install the **SST** to the oil pump driven sprocket and lock the oil pump against rotation.

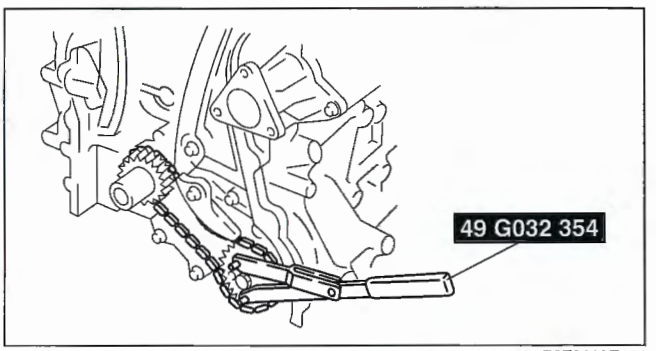

B3E0110E054

Timing Chain Installation Note

1. Install the **SST** to the camshaft as shown in the figure.
2. Install the timing chain.
3. Remove the wire or paper clip from the chain tensioner piston and apply tension to the timing chain.

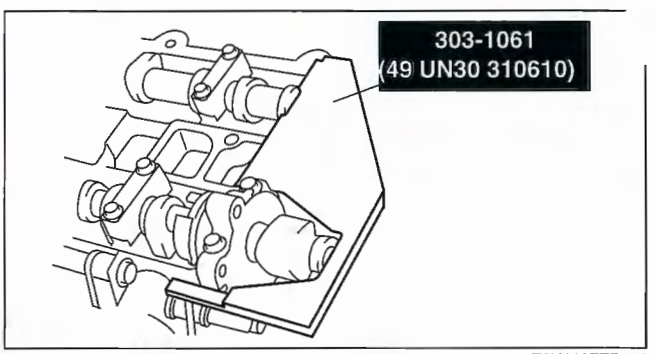

E6U110ZEB036

Front Oil Seal Installation Note

1. Apply clean engine oil to a new front oil seal.
2. Push the front oil seal in the engine front cover by hand. Use the SST to tap in the front oil seal.

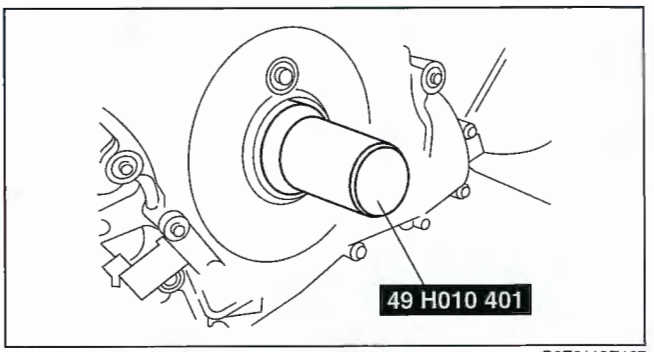

B3E0110E127

Front oil seal press-in amount
0—0.5 mm {0—0.019 in}

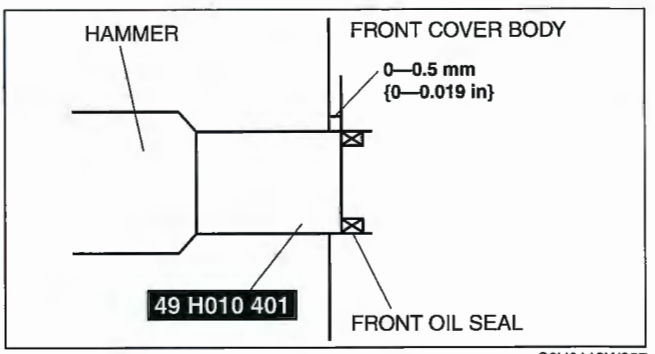

C3U0110W057

Engine Front Cover Installation Note

Apply silicone sealant to the engine front cover.

Caution

- **Install the engine front cover within 10 min of applying the silicone sealant.**
- **Silicone sealant is not needed in area C shown in the figure.**

Thickness

A: 2.2—3.2 mm {0.086—0.126 in}
B: 1.5—2.5 mm {0.059—0.098 in}

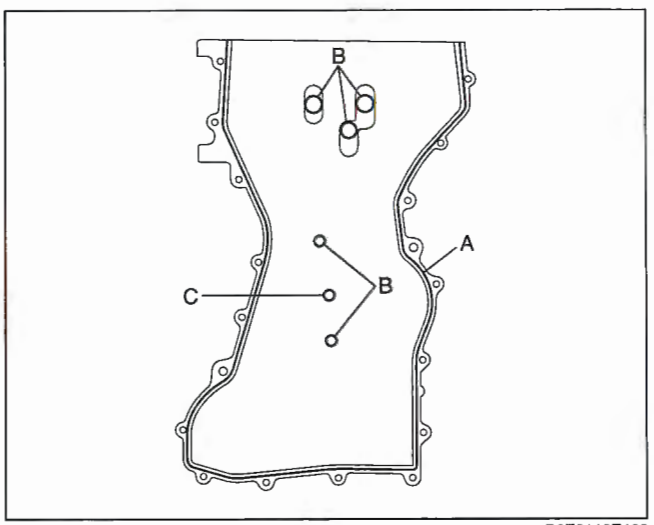

B3E0110E129

2. Tighten the engine front cover installation bolts in the order shown in the figure.

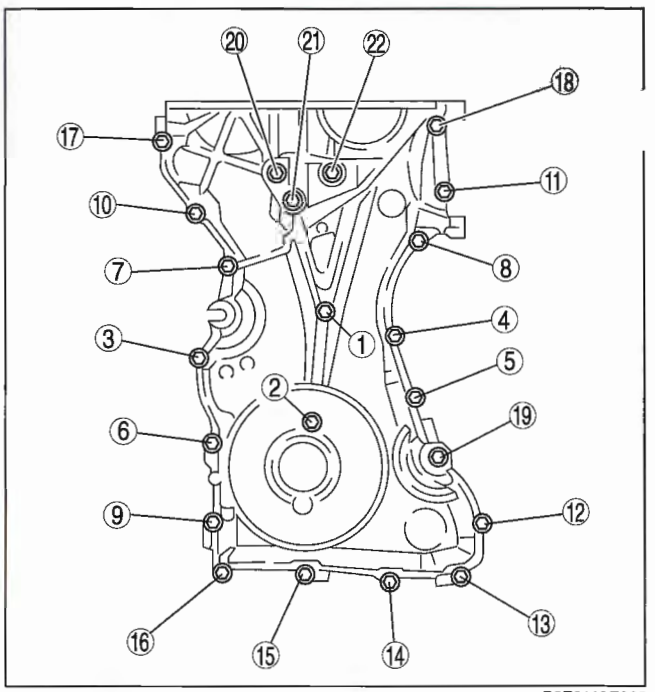

B3E0110E062

Installation Position	Tightening Torque N·m {kgf·m, ft·lbf}
1—18	8.0—11.5 N·m {81.6—117.2 kgf·cm, 70.9—101.7 in·lbf}
19—22	40—55 {4.1—5.6, 29.7—40.5}

No.3 Engine Mount Rubber, No.3 Engine Joint Bracket Installation Note

1. Tighten the No.3 engine mount bracket stud bolts.

   Tightening torque
   7.0—13 N·m {71.4—132.5 kgf·cm, 62.0—115.0 in·lbf}

2. Temporarily tighten the No.3 engine mount rubber installation bolts.

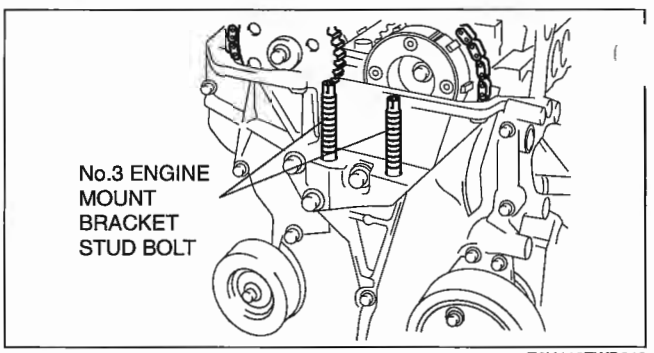

E6U110ZWB019

3. Install the No.3 engine joint bracket and tighten the bolts and nuts in the order shown in the figure.

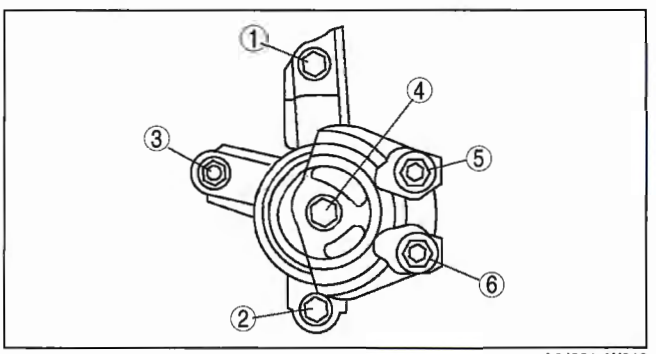

A6J2215W012

Crankshaft Pulley Lock Bolt Installation Note

1. Install the **SST** to the camshaft as shown in the figure.
   Verify that cylinder No.1 is at TDC of the compression stroke. (Position crank weight contacts **SST**.)

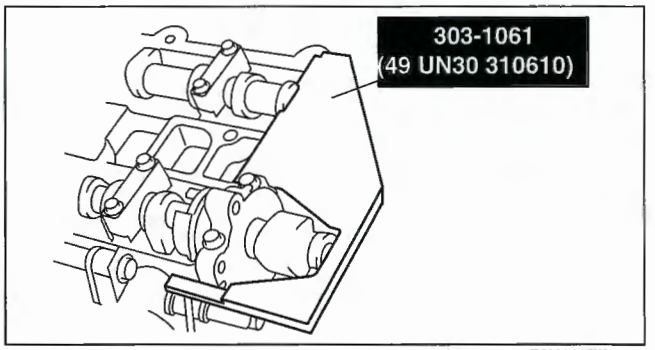

E6U110ZEB036

3. To position the crankshaft pulley, temporarily tighten it and, using a suitable bolt **(M6 X 1.0 length 25—35 mm {0.99—1.37 in})**, fix the crankshaft pulley to the engine front cover.

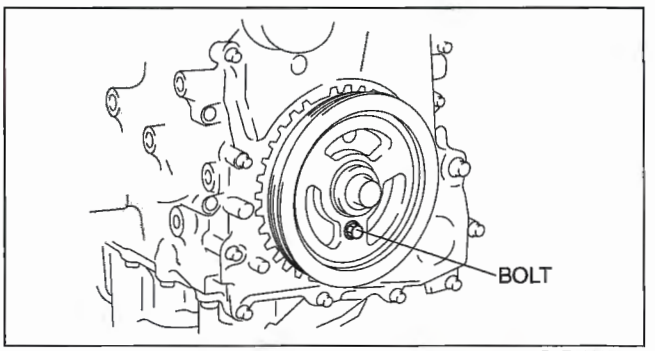

B3E0110E063

4. Install the **SSTs** to the crankshaft pulley, lock the crankshaft against rotation, and tighten the crankshaft pulley lock bolt using the following two steps.

   Tightening procedure
   (1) 96—104 N·m {9.8—10.6 kgf·m, 70.9—76.7 ft·lbf}
   (2) 87°—93°

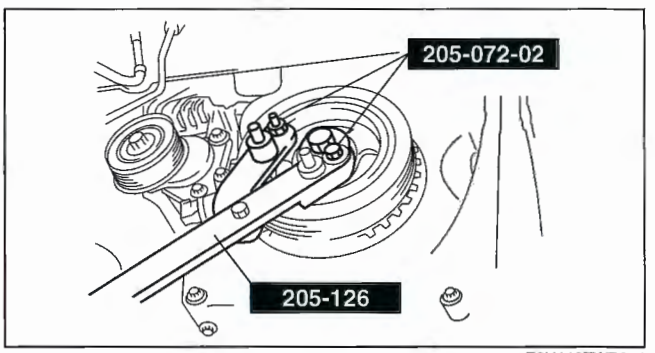

E6U110ZWB051

5. Remove the bolt **(M6 X 1.0 length 25—35 mm {0.99—1.37 in})** installed to the crankshaft pulley.
6. Remove the **SST** from the camshaft.
7. Remove the **SST** installed in the cylinder block lower blind plug hole.
8. Rotate the crankshaft clockwise two turns and inspect the valve timing.
   - If not aligned, repeat from Step 1.
9. Install the cylinder block lower blind plug.

   Tightening torque
   18—22 N·m {1.9—2.2 kgf·m, 13.3—16.2 ft·lbf}

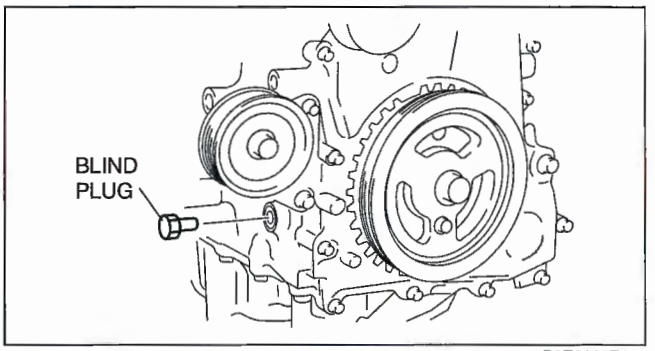

B3E0110E102

Cylinder Head Cover Installation Note

1. Apply silicone sealant to the areas shown in the figure.

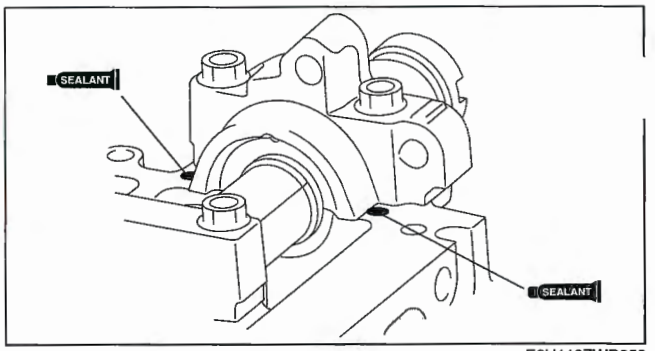

E6U110ZWB058

Thickness
5.0 mm {0.196 in}

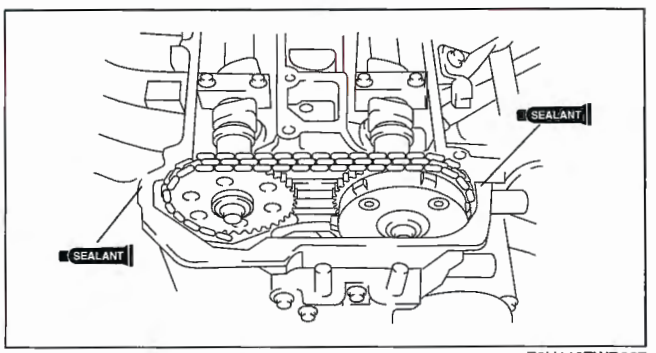

E6U110ZWB007

2. Tighten the cylinder head cover bolts in the order shown in the figure.

Tightening torque
8.0—10.5 N·m {81.6—107.1 kgf·cm, 70.8—92.9 in·lbf}

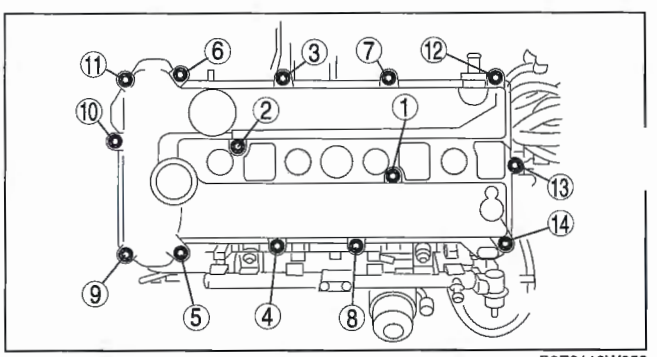

B3E0110W050

CYLINDER HEAD GASKET REPLACEMENT [L3 WITH TC]

E6U011010271W03

Warning

- **Fuel vapor is hazardous. It can very easily ignite, causingdeath, serious injury, or damage. Always keep sparks and flames away from fuel.**
- **Fuel line spills and leakage from the pressurized fuel system are dangerous. Fuel can easily ignite and cause serious injury or death and damage. Fuel can also irritate skin and eyes. To prevent this, always perform the Fuel Line Safety Procedure. (See 01–14B–4 BEFORE REPAIR PROCEDURE [L3 WITH TC].)**

1. Remove the timing chain. (See 01–10B–10 TIMING CHAIN REMOVAL/INSTALLATION [L3 WITH TC].)
2. Remove the generator. (See 01–17B–4 GENERATOR REMOVAL/INSTALLATION [L3 WITH TC].)

Note

- Place the generator out of the way with the wiring harnesses connected.

3. Remove the exhaust manifold. (See 01–15B–2 EXHAUST SYSTEM REMOVAL/INSTALLATION [L3 WITH TC].)
4. Remove the intake manifold. (See 01–13B–4 INTAKE AIR SYSTEM REMOVAL/INSTALLATION [L3 WITH TC].)
5. Disconnect the heater, bypass, radiator hoses.

6. To firmly support the engine, first set the engine jack and attachment to the oil pan.
7. Remove in the order indicated in the figure. Install in the reverse order of removal.
. Bleed the air from the cooling system. (See01–12B–4 ENGINE COOLANT REPLACEMENT [L3 WITH TC].)

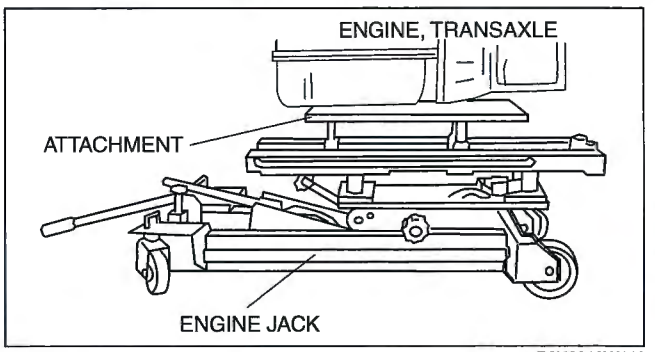

B6U2218W110

10. Inspect the compression pressure. (See 01–10B–9 COMPRESSION INSPECTION [L3 WITH TC].)

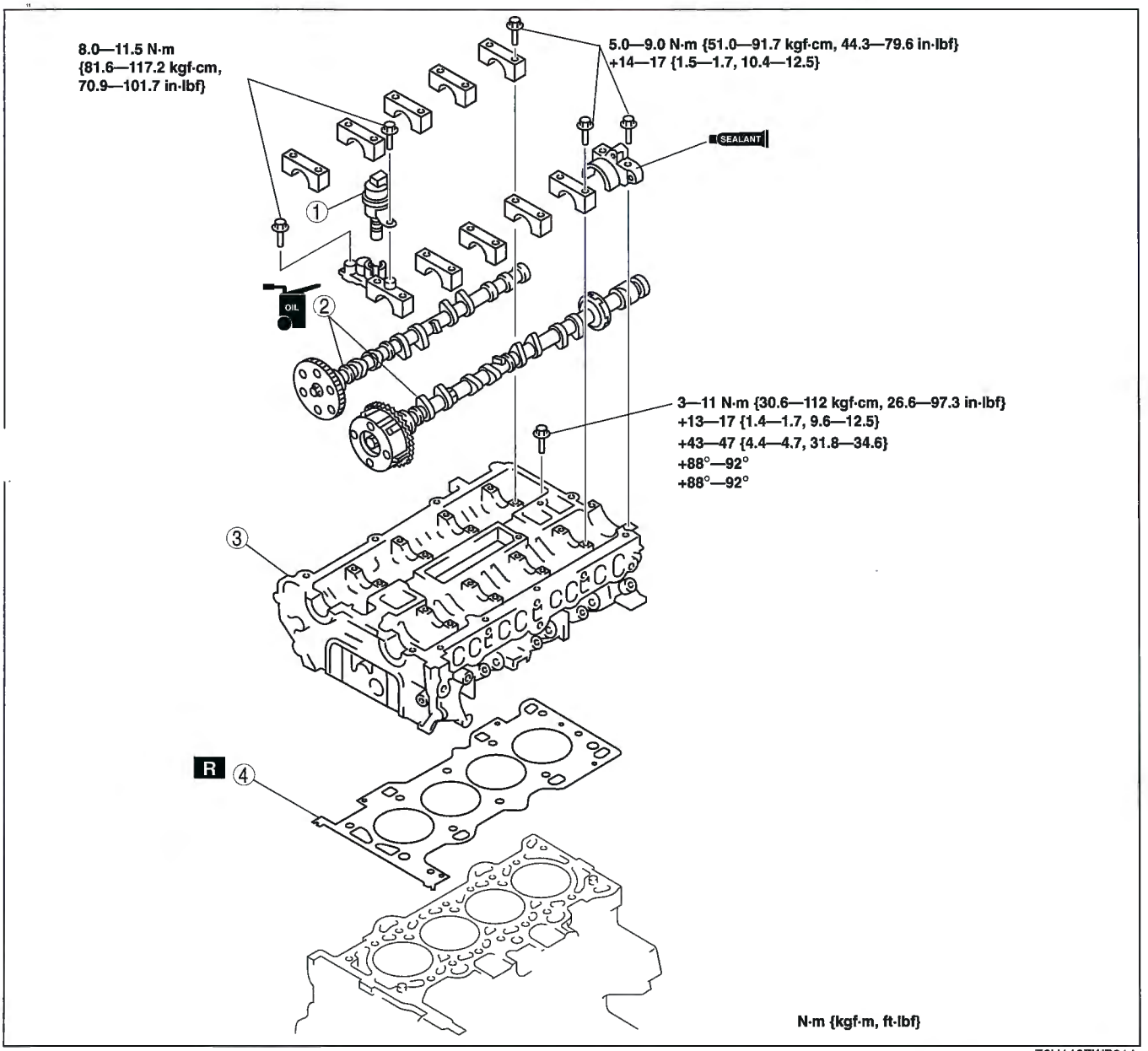

E6U110ZWB014

1	Oil Control Valve (OCV)
2	Camshaft (See 01–10B–22 Camshaft Removal Note.) (See 01–10B–23 Camshaft Installation Note.)
3	Cylinder head (See 01–10B–22 Cylinder Head Removal Note.) (See 01–10B–22 Cylinder Head Installation Note.)
4	Cylinder head gasket

Camshaft Removal Note

Note
- The camshaft caps are to be kept ordered for correct reassembly in their original positions.

1. Loosen the camshaft cap bolts in two or three passes in the order shown, and remove them.

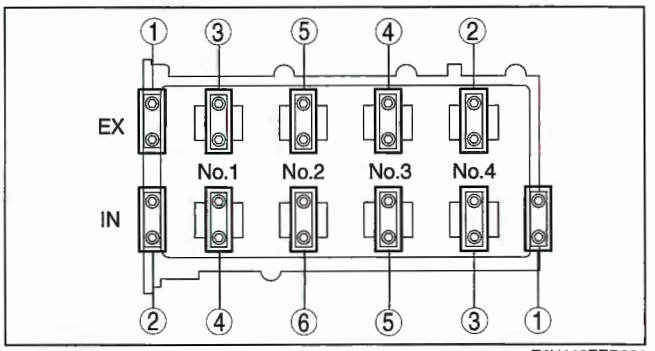

E6U110ZEB001

Cylinder Head Removal Note

1. Loosen the cylinder head installation bolts in two to three passes in the order shown in the figure and remove them.

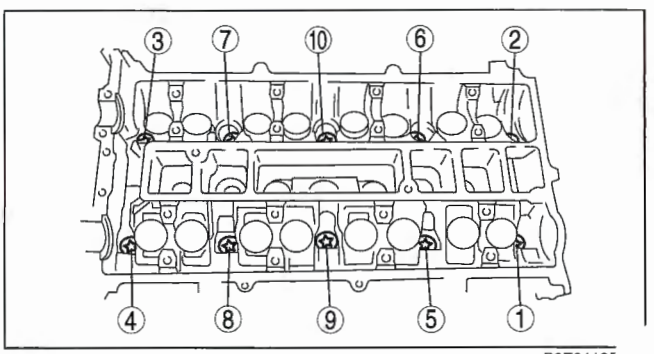

B3E0110E

Cylinder Head Installation Note

1. Measure the length of each cylinder head bolt.
   - Replace any cylinder head bolts that exceed the maximum length.

Cylinder head bolt length
Standard
144.7—145.3 mm {5.700—5.720 in}
Maximum:
146 mm {5.748 in}

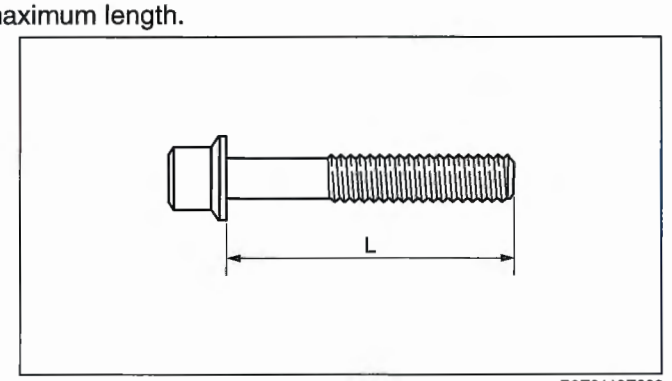

B3E0110E088

Tightening procedure
(1) 3—11 N·m {30.6—112 kgf·cm, 26.6—97.3 in·lbf}
(2) 13—17 N·m {1.4—1.7 kgf·m, 9.6—12.5 ft·lbf}
(3) 43—47 N·m {4.4—4.7 kgf·m, 31.8—34.6 ft·lbf}
(4) 88°—92°
(5) 88°—92°

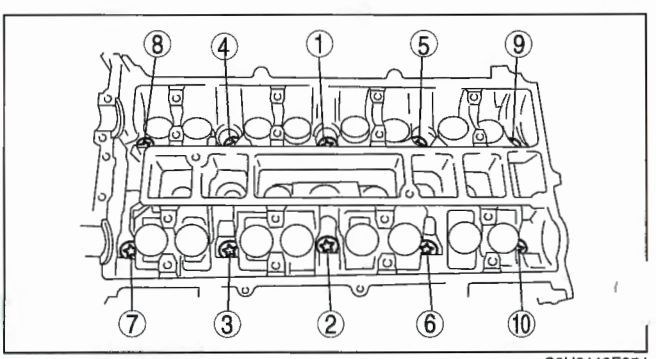

C3U0110E054

Camshaft Installation Note

1. Install the camshaft with No.3 cylinder cam aligned at TDC of compression stroke.
2. Carefully apply adhesive agent to the area indicated in the figure so that it does not leak into the sliding part.

   Thickness
   1.0 mm {0.039 in}

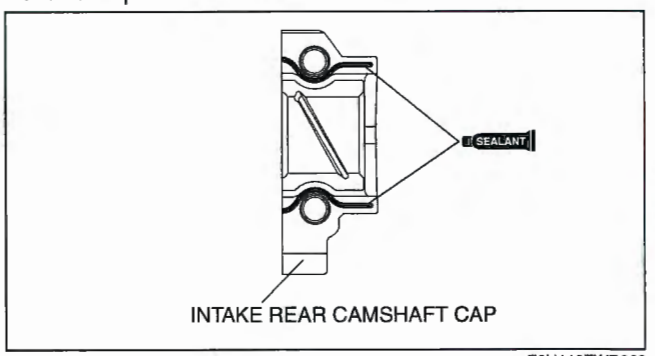

E6U110ZWB063

3. Install the camshaft caps and temporarily tighten the camshaft cap bolts evenly in two or three passes, and then tighten the camshaft cap bolts using the following two steps, in the order shown in the figure.

   Tightening procedure
   (1) 5.0—9.0 N·m {51.0—91.7 kgf·cm, 44.3—79.6 in·lbf}
   (2) 14.0—17.0 N·m {1.5—1.7 kgf·m, 10.4—12.5 ft·lbf}

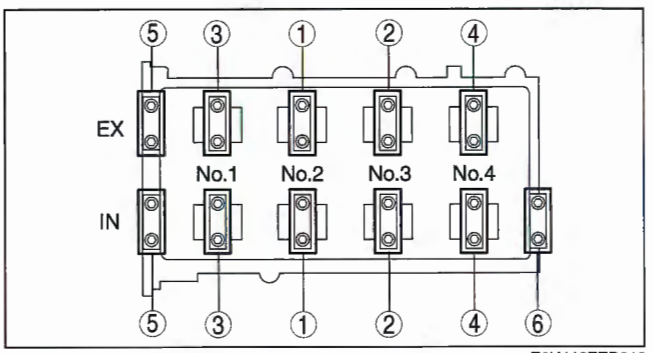

E6U110ZEB012

FRONT OIL SEAL REPLACEMENT [L3 WITH TC]

E6U011010602W03

1. Disconnect the negative battery cable.
2. Remove the front tire (RH).
   Remove the under cover.
3. Remove the splash shield (RH).
5. Remove the charge air cooler. (See01–13B–4 INTAKE AIR SYSTEM REMOVAL/INSTALLATION [L3 WITH TC].)
6. Remove the high pressure fuel pump. (See 01–14B–18 HIGH PRESSURE FUEL PUMP REMOVAL/INSTALLATION [L3 WITH TC].)
7. Remove the ignition coils. (See 01–18B–2 IGNITION COIL REMOVAL/INSTALLATION [L3 WITH TC].)
8. Disconnect the OCV connectors.
9. Disconnect the CMP sensor connector.
10. Disconnect the P/S oil pump connector.
11. Remove the ventilation hose.
12. Remove cylinder head cover. (See 01–10B–12 Cylinder Head Cover Removal Note.)
13. Remove the drive belt. (See 01–10B–3 DRIVE BELT REPLACEMENT [L3 WITH TC].)
14. Disconnect the front drive shaft (RH) from the joint shaft. (See 03–13–16 FRONT DRIVE SHAFT REMOVAL/INSTALLATION [L3, L3 WITH TC].)
15. Remove the CKP sensor. (See 01–40B–41 CRANKSHAFT POSITION (CKP) SENSOR REMOVAL/INSTALLATION [L3 WITH TC].)

16. Remove in the order indicated in the figure.
17. Install in the reverse order of removal.
18. Bleed the air from the cooling system. (See01–12B–4 ENGINE COOLANT REPLACEMENT [L3 WITH TC].)

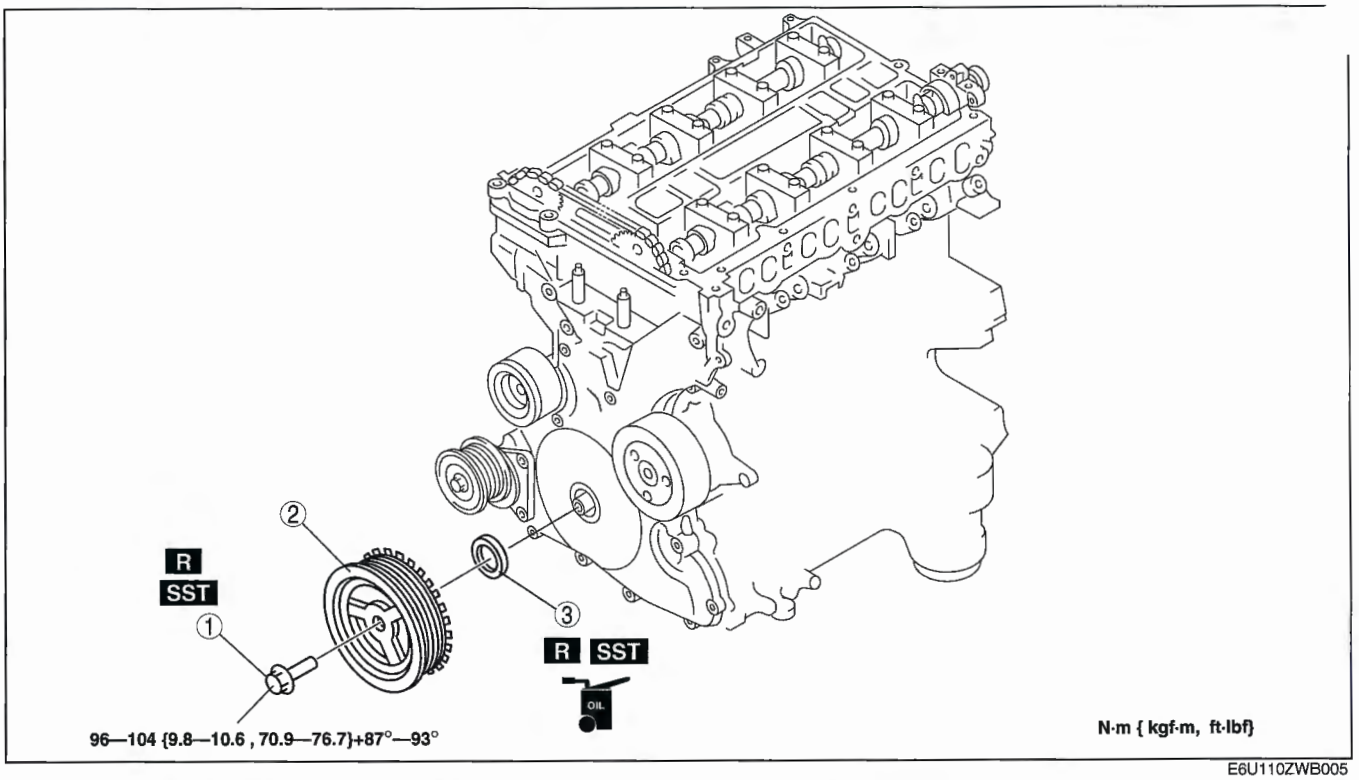

E6U110ZWB005

1	Crankshaft pulley lock bolt (See 01–10B–24 Crankshaft Pulley Lock Bolt Removal Note.) (See 01–10B–24 Crankshaft Pulley Lock Bolt Removal Note.)
2	Crankshaft pulley
3	Front oil seal (See 01–10B–25 Front Oil Seal Removal Note.) (See 01–10B–25 Front Oil Seal Installation Note.)

Crankshaft Pulley Lock Bolt Removal Note

1. Remove the cylinder block lower blind plug and install the **SST**.
2. Verify that cylinder No.1 is at TDC of the compression stroke. (Position crank weight contacts **SST**.)

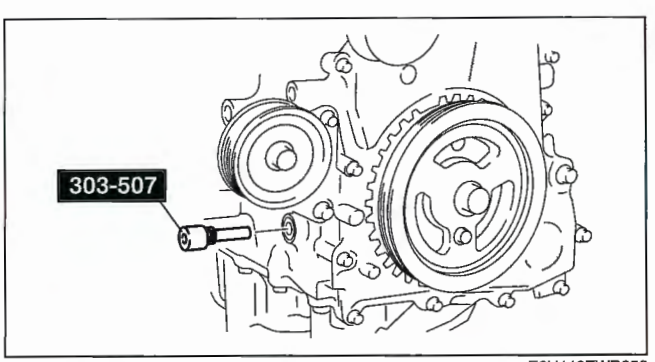

E6U110ZWB050

3. Install the **SSTs** to the crankshaft pulley and lock the crankshaft against rotation.

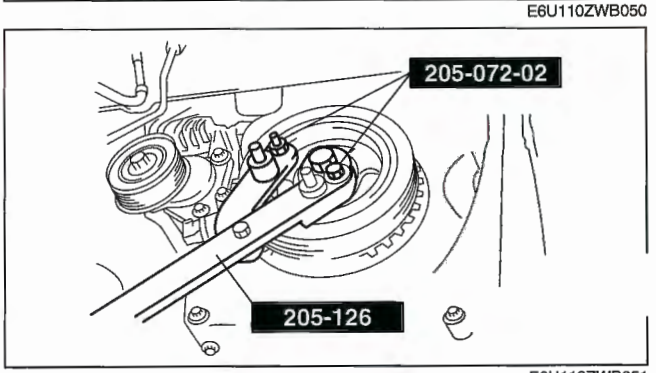

E6U110ZWB051

Front Oil Seal Removal Note

1. Remove the oil seal lip using a razor.
2. Remove the oil seal using a flathead screwdriver with the tip protected by a rag to prevent crankshaft oil seal damage.

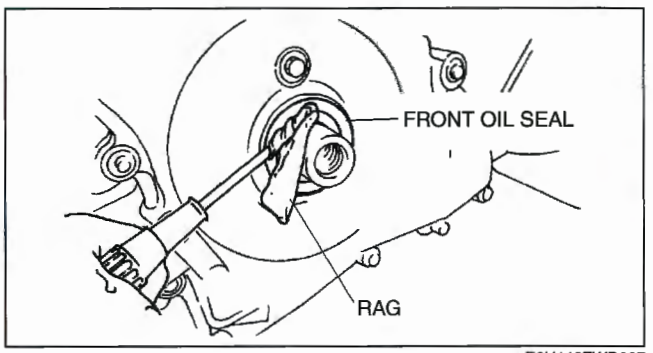

E6U110ZWB037

Front Oil Seal Installation Note

1. Apply clean engine oil to a new oil seal.
2. Insert the oil seal into the engine front cover.
3. Tap in the oil seal using the **SST**.

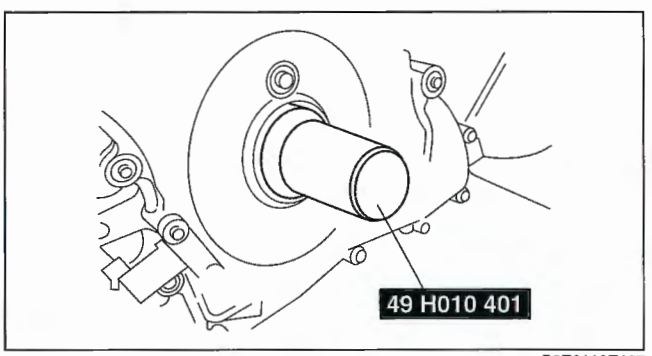

B3E0110E127

Front oil seal press-in amount
0—0.5 mm {0—0.019 in}

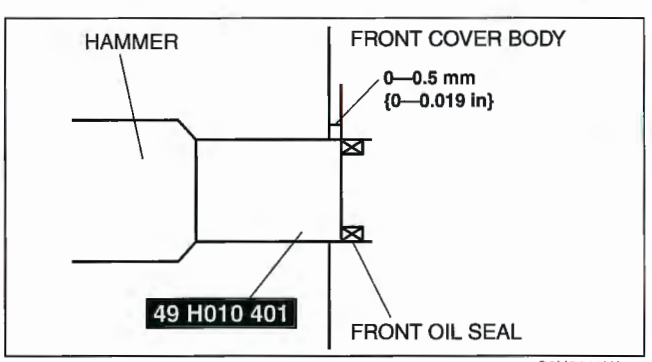

C3U0110W057

Crankshaft Pulley Lock Bolt Installation Note

1. Install the **SST** to the camshaft as shown in the figure.
2. Verify that cylinder No.1 is at TDC of the compression stroke. (Position crank weight contacts **SST**.)

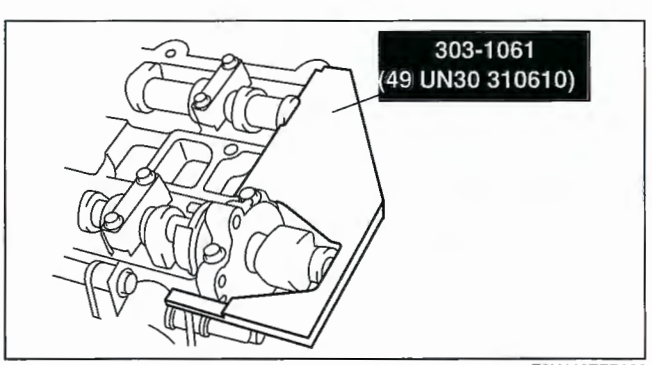

E6U110ZEB036

3. To position the crankshaft pulley, temporarily tighten it and, using a suitable bolt **(M6 x 1.0)** , fix the crankshaft pulley to the engine front cover.

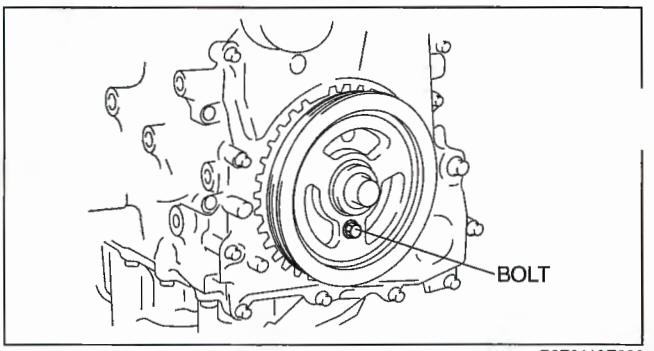

B3E0110E063

4. Install the **SSTs** to the crankshaft pulley and lock the crankshaft against rotation, and tighten the crankshaft pulley lock bolt using the following two steps.

   Tightening procedure
   (1) 96—104 N·m {9.8—10.6 kgf·m, 70.9—76.7 ft·lbf}
   (2) 87°—93°

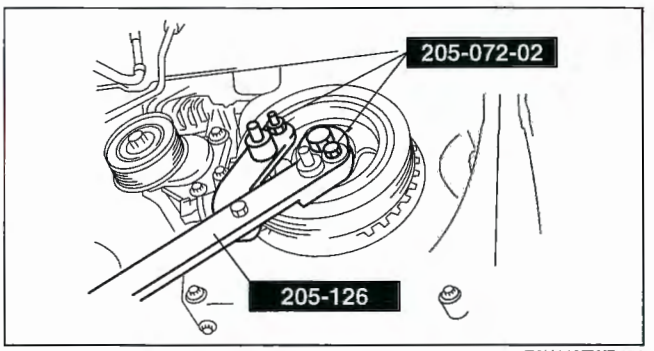

E6U110ZWB051

5. Remove the crankshaft pulley installation bolt **(M6 X 1.0)**.
6. Remove the **SST** from the camshaft.
7. Remove the **SST** installed in the cylinder block lower blind plug hole.
8. Rotate the crankshaft clockwise **two turns** and inspect the valve timing.
   - If not aligned, repeat from Step 1.
9. Install the cylinder block lower blind plug.

   Tightening torque
   18—22 N·m {1.9—2.2 kgf·m, 13.3—16.2 ft·lbf}

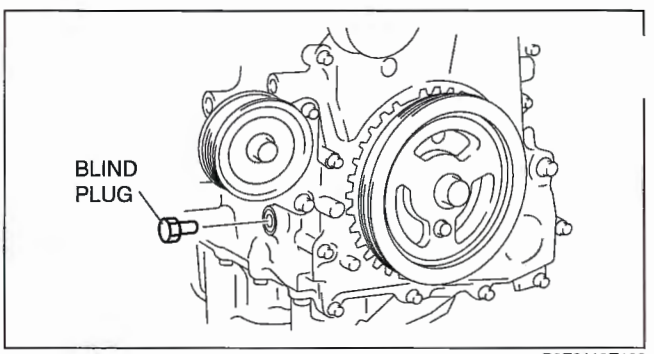

B3E0110E102

REAR OIL SEAL REPLACEMENT [L3 WITH TC]

E6U011011399W03

1. Remove the flywheel. (See 05–10–25 CLUTCH UNIT REMOVAL/INSTALLATION [A26MX-R].)
2. Remove in the order indicated in the figure.
   Install in the reverse order of removal.

1	Bolt
2	Rear oil seal (See 01–10B–27 Rear Oil Seal Installation Note.)

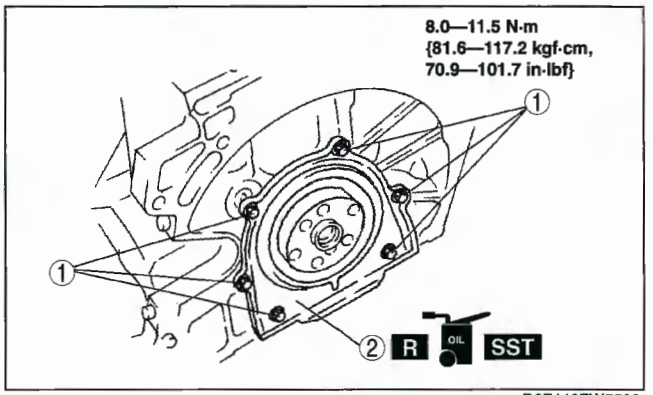

D6E110ZW5502

Rear Oil Seal Installation Note

1. Apply silicone sealant to the areas shown in the figure.

Caution
- **Install the rear oil seal within 10 min of applying the silicone sealant.**

Thickness
4.0—6.0 mm {0.16—0.23 in}

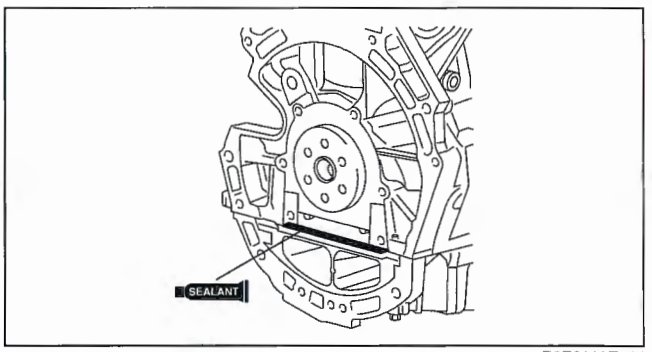

B3E0110E114

2. Apply clean engine oil to a new rear oil seal.

3. Install the rear oil seal using a **SST**.

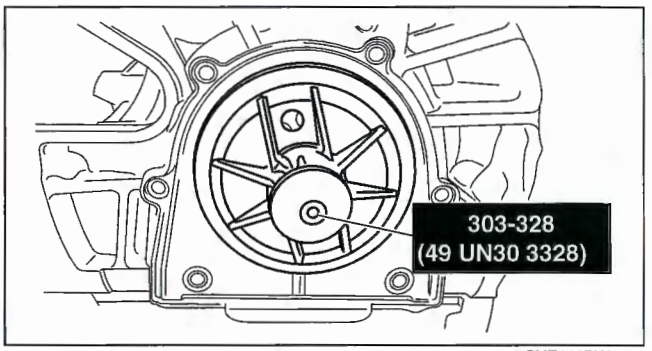

CUE110BW2005

4. Tighten the rear oil seal installation bolts in the order shown in the figure.

Tightening torque
8.0—11.5 N·m {81.6—117.2 kgf·cm, 70.9—101.7 in·lbf}

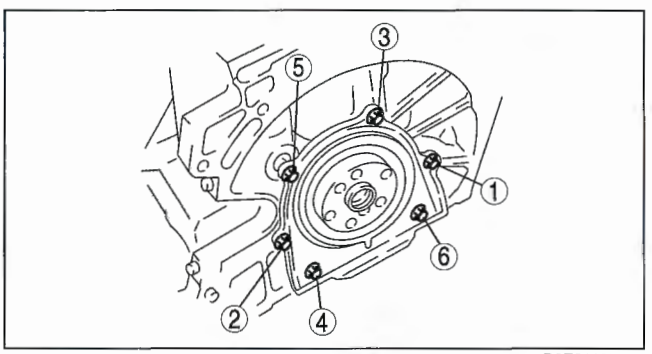

B3E0110E116

ENGINE REMOVAL/INSTALLATION [L3 WITH TC]

E6U011002000W16

Warning

- **Fuel vapor is hazardous. It can very easily ignite, causing death, serious injury, or damage. Alway keep sparks and flames away from fuel.'**
- **Fuel line spills and leakage from the pressurized fuel system are dangerous. Fuel can easily ignite and cause serious injury or death and damage. Fuel can also irritate skin and eyes. To prevent this, always perform the Fuel Line Safety Procedure. (See 01–14B–4 BEFORE REPAIR PROCEDURE [L3 WITH TC].)**

Note

- The engine and manual transaxle component shall be installed or removed from the upper side of the vehicle.

1. Remove the battery. (See 01–17B–2 BATTERY REMOVAL/INSTALLATION [L3 WITH TC].)
2. Remove the battery tray. (See 01–17B–2 BATTERY REMOVAL/INSTALLATION [L3 WITH TC].)
3. Remove the battery bracket.
4. Remove the charge air cooler. (See01–13B–4 INTAKE AIR SYSTEM REMOVAL/INSTALLATION [L3 WITH TC].)
5. Remove the shroud panel. (See 09–10–17 SHROUD PANEL REMOVAL/INSTALLATION.)
6. Remove the cooling fan component. (See 01–12B–8 COOLING FAN REMOVAL/INSTALLATION [L3 WITH TC].)
7. Remove the radiator. (See 01–12B–6 RADIATOR REMOVAL/INSTALLATION [L3 WITH TC].)
8. Drain the transaxle oil. (See05–15C–2 TRANSAXLE OIL INSPECTION [A26MX-R].)
9. Remove the P/S oil pump with the oil hoses and pipes still connected.

Note

- Position and secure the P/S oil pump out of the way with a rope.

10. Remove the A/C compressor with the pipes still connected.

Note

- Position and secure the A/C compressor out of the way with rope or wire.

11. Disconnect the front drive shaft (RH) from the joint shaft side. (See 03–13–16 FRONT DRIVE SHAFT REMOVAL/INSTALLATION [L3, L3 WITH TC].)
12. Disconnect the front drive shaft (LH) from the transaxle side. (See 03–13–16 FRONT DRIVE SHAFT REMOVAL/INSTALLATION [L3, L3 WITH TC].)
13. Remove the propeller shaft. (See 03–15–4 PROPELLER SHAFT REMOVAL/INSTALLATION.)
14. Remove the air cleaner, intake air duct, and vacuum hose.
15. Disconnect the shift cable and selector cable from the transaxle side. (See 05–15C–4 MANUAL TRANSAXLE REMOVAL/INSTALLATION [A26MX-R].)
16. Remove the clutch release cylinder with the pipes still connected. (See 05–10–16 CLUTCH RELEASE CYLINDER REMOVAL/INSTALLATION [A26MX-R].)
17. Disconnect the vacuum hose and the heater hose.
18. Disconnect the wiring harnesses.
19. Remove the TWC.
20. Remove the front pipe. (See 01–15B–2 EXHAUST SYSTEM REMOVAL/INSTALLATION [L3 WITH TC].)

21. Remove in the order indicated in the figure.
22. Install in the reverse order of removal.
23. Start the engine, and inspect and adjust the following:
    - Bleed the air from the cooling system. (See01–12B–4 ENGINE COOLANT REPLACEMENT [L3 WITH TC].)
    - Runout and contact on pulley and belt
    - Leakage of engine oil, engine coolant, automatic transmission fluid, or fuel.
    - Ignition timing, idle speed and idle mixture (CO and HC)
    - Engine accessories operation
24. Perform a road test and verify that there is no abnormal vibration or noise.

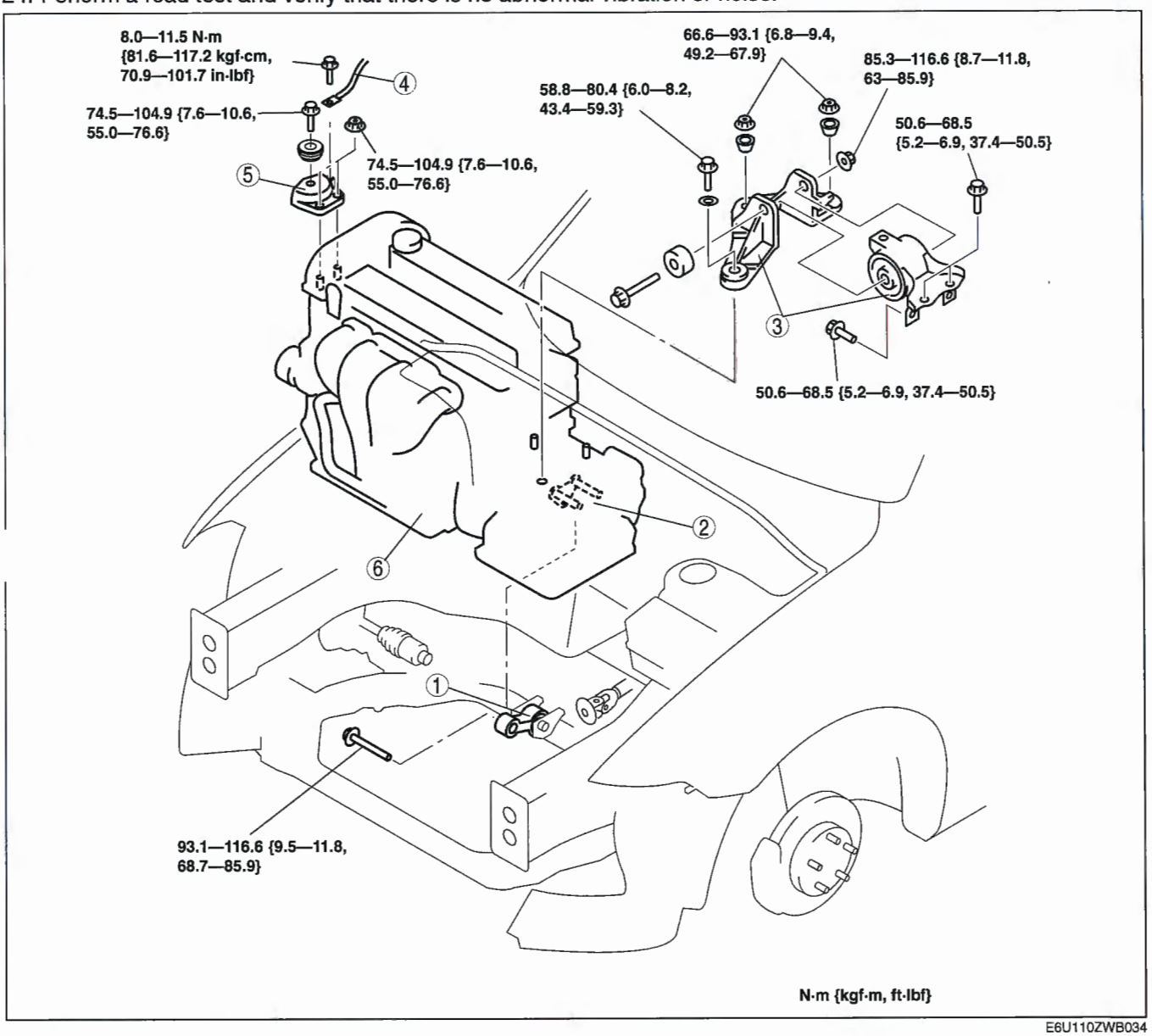

E6U110ZWB034

1	No.1 Engine mount rubber (See 01–10B–30 No.1 Engine Mount Rubber Removal Note.) (See 01–10B–35 No.1 Engine Mount Rubber Installation Note.)
2	No.1 Engine mount bracket (See 01–10B–35 No.1 Engine Mount Bracket Installation Note.)
3	No.4 Engine mount bracket, No.4 engine mount rubber (See 01–10B–34 No.4 Engine Mount Bracket, No.4 Engine Mount Rubber Installation Note.)

4	Engine ground
5	No.3 Engine joint bracket (See 01–10B–32 No.3 Engine Joint Bracket Installation Note.)
6	Engine, manual transaxle

No.1 Engine Mount Rubber Removal Note

1. Remove through-bolt A on the No.1 engine mount bracket side from the underside of the vehicle.
2. Loosen through-bolt B on the crossmember side until approx. three pitches remain.

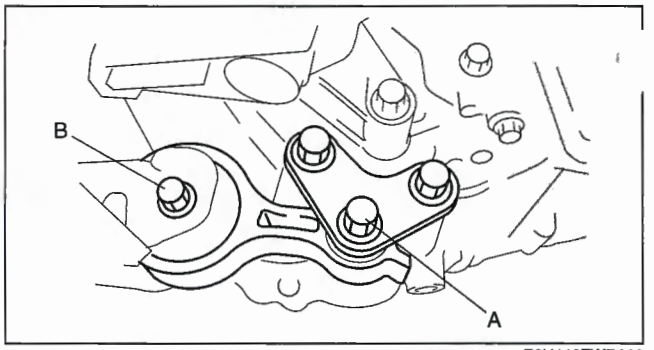

E6U110ZWB009

Note

- Do not remove the No.1 engine mount rubber from the crossmember.

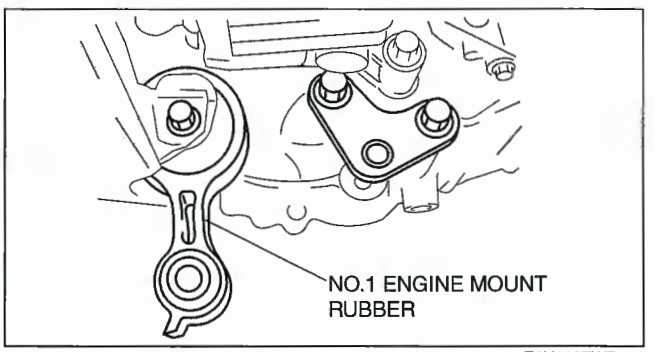

E6U110ZWB010

No.4 Engine Mount Bracket, No.4 Engine Mount Rubber Removal Note

1. Install the **SST** using the following procedure.

Caution

- **Refer to the SST instruction manual for the basic handing procedure.**

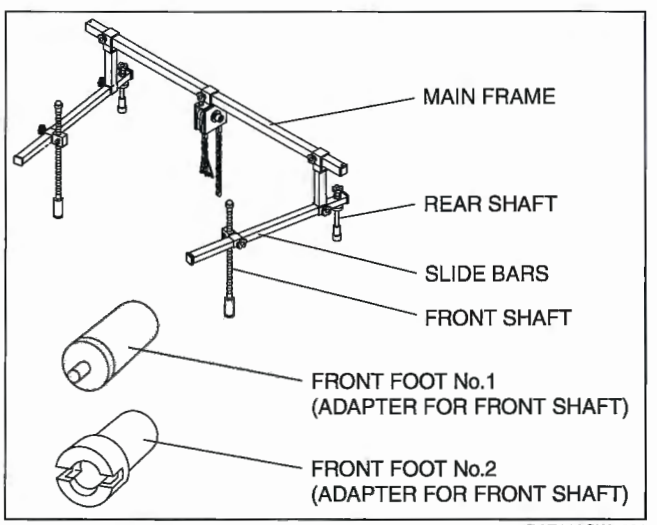

D6E110CW7001

(1) Install the right rear shaft of the **SST** to the bolt of the right shock absorber as shown in the figure.
(2) Install the left rear shaft of the **SST** to the bolt of the left shock absorber. (Identical position to the right side)

Caution
- **When setting the SST on the right side, make sure it doesn't interfere with the DSC HU/CM.**

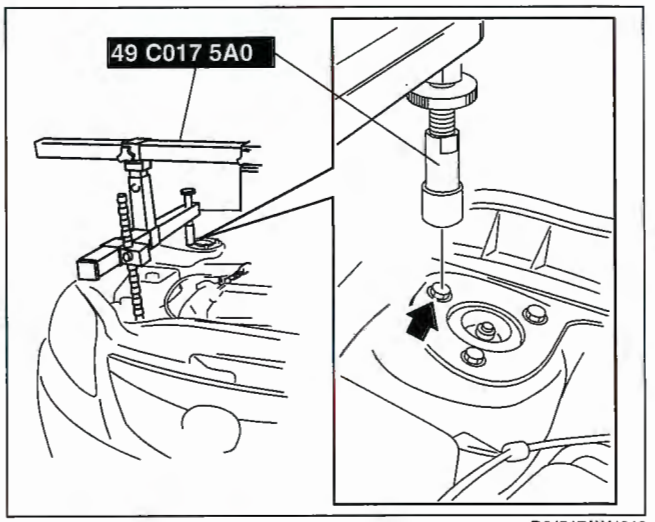

D6J517AW4012

(3) Install the left/right front shaft of the **SST** with front foot No.2 to the bolt as shown in the figure.
(4) Adjust the positions of the **SST** side bars so that they are the same height (left and right) and horizontal.
(5) Make sure each joint is securely tightened.

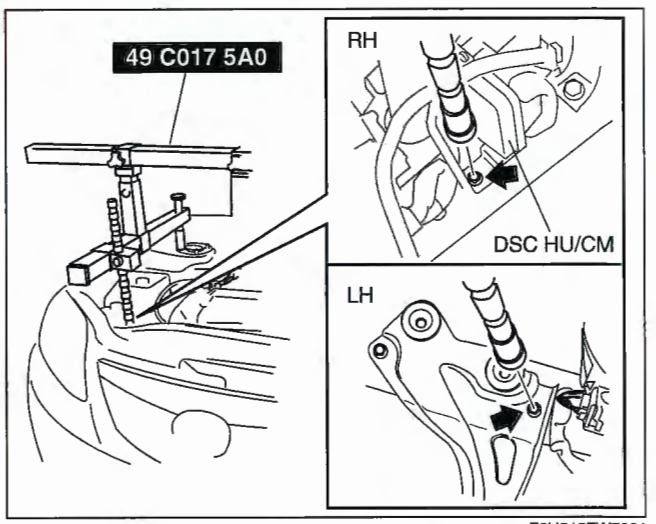

E6U515ZW7001

2. Support the engine using the **SST**.

Note
- The SST (49 E017 5A0) can be used in place of the SST (49 C017 5A0).

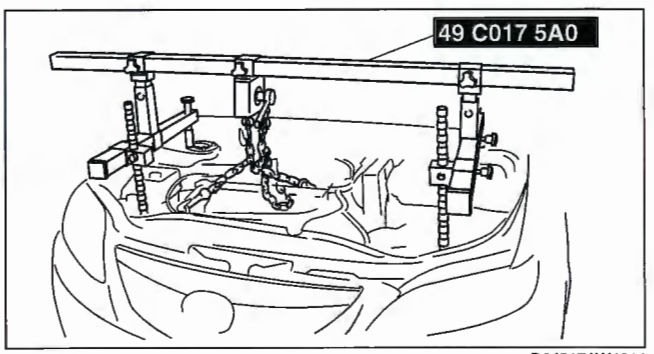

D6J517AW4014

3. Secure the engine and transaxle using an engine jack and attachment.

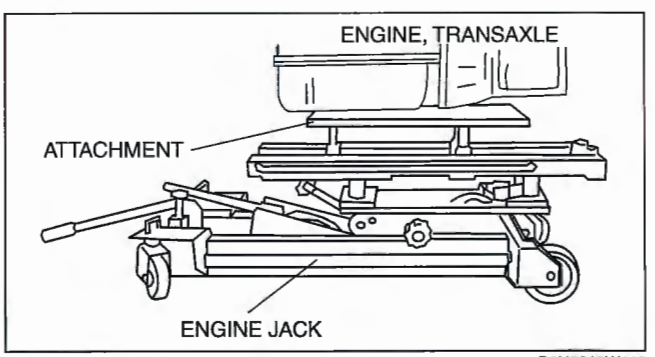

B6U2218W110

4. Remove the **SST**.

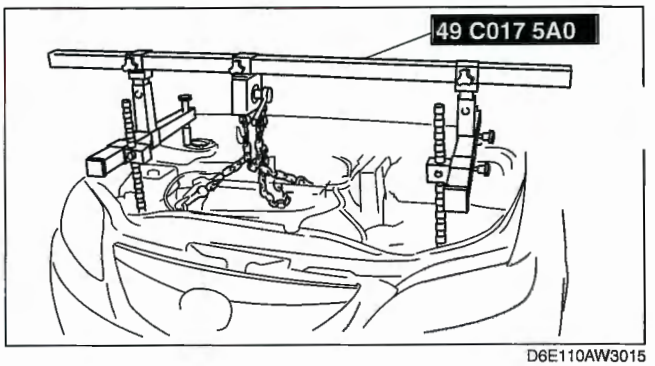

D6E110AW3015

5. Secure the engine using a hoist.

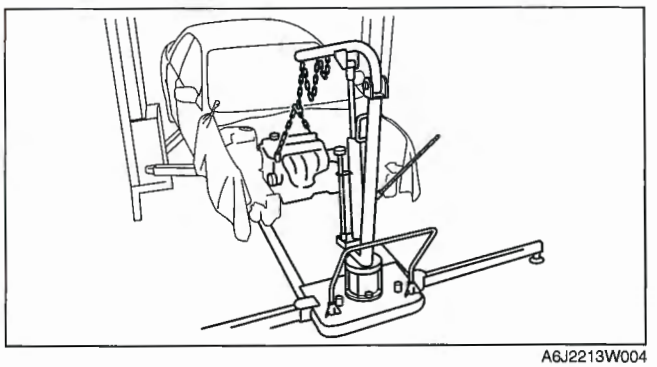
A6J2213W004

No.3 Engine Joint Bracket Installation Note

1. Secure the engine and transaxle using an engine jack and attachment.

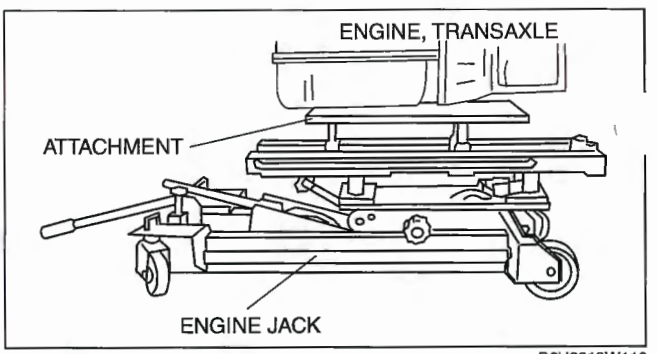

B6U2218W110

2. Install the SST using the following procedure.

Caution
- **Refer to the SST instruction manual for the basic handing procedure.**

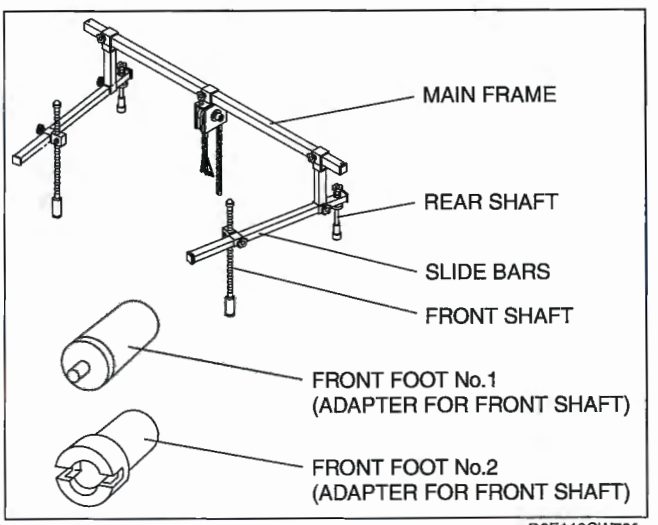

D6E110CW70

(1) Install the right rear shaft of the **SST** to the bolt of the right shock absorber as shown in the figure.
(2) Install the left rear shaft of the **SST** to the bolt of the left shock absorber. (Identical position to the right side)

Caution
- **When setting the SST on the right side, make sure it doesn't interfere with the DSC HU/CM.**

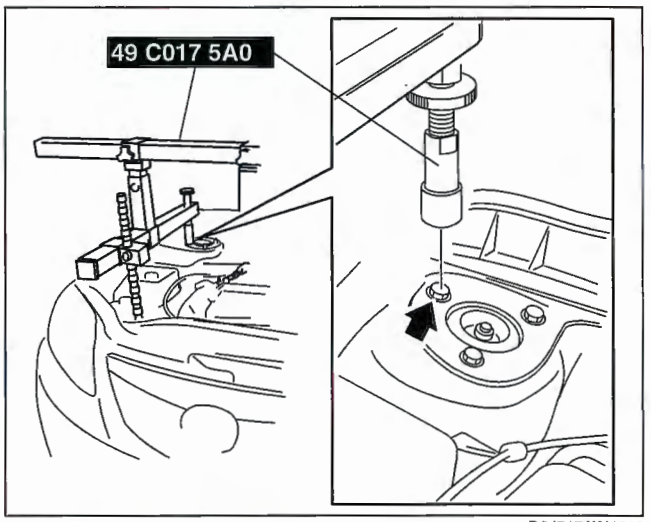

D6J517AW4012

(3) Install the left/right front shaft of the **SST** with front foot No.2 to the bolt as shown in the figure.
(4) Adjust the positions of the **SST** side bars so that they are the same height (left and right) and horizontal.
(5) Make sure each joint is securely tightened.

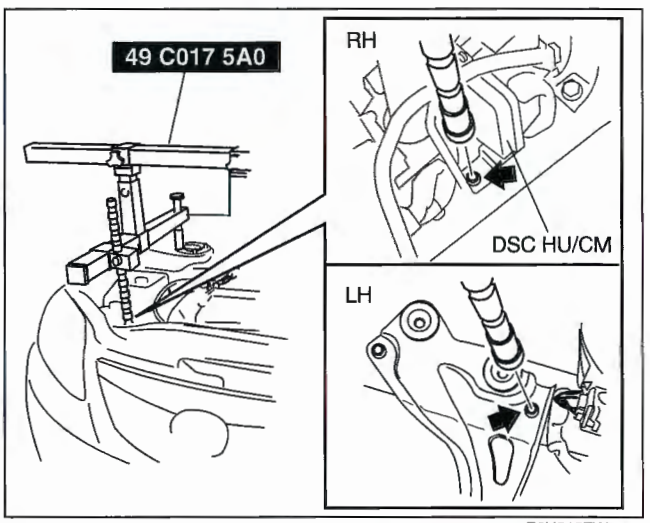

E6U515ZW7001

3. Support the engine using the **SST**.

Note
- The SST (49 E017 5A0) can be used in place of the SST (49 C017 5A0).

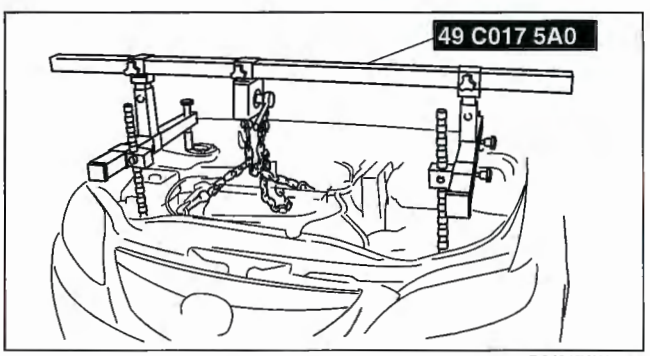

D6J517AW4014

4. Tighten the No. 3 engine mount bracket stud bolt.

Tightening torque
7.0—13 N·m {71.4—132.5 kgf·cm, 62.0—115.0 in·lbf}

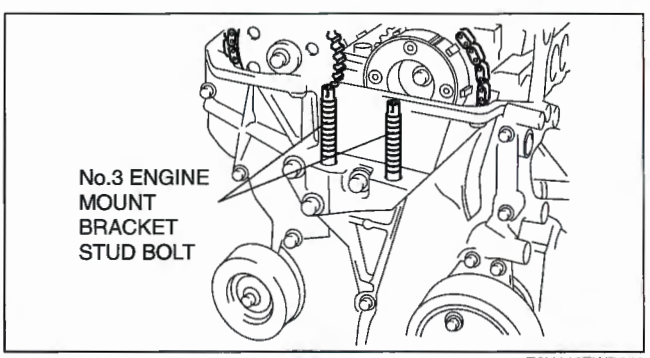

E6U110ZWB019

5. Tighten the No.3 engine joint bracket bolts and nuts in the order shown in the figure.

Tightening procedure
(1) Temporarily tighten (2).
(2) Completely tighten (1).
(3) Completely tighten (2).

Tightening torque
74.5—104.9 N·m {7.6—10.6 kgf·m, 55.0—76.6 ft·lbf}

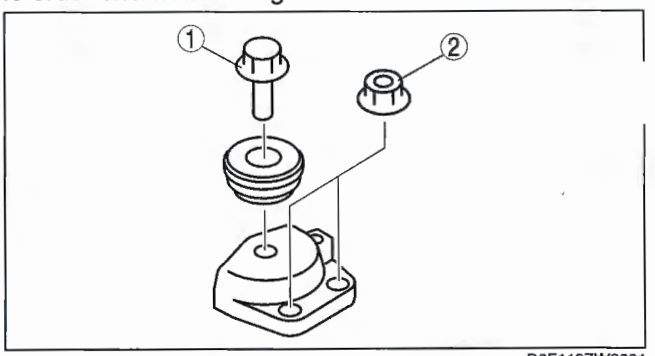

D6E110ZW2001

No.4 Engine Mount Bracket, No.4 Engine Mount Rubber Installation Note

1. Tighten the No.4 engine mount bracket and No.4 engine mount rubber bolts and nuts in the order shown in the figure.

Tightening procedure
(1) Temporarily tighten (1).
(2) Align (2) in position and temporarily tighten.
(3) Completely tighten (1) from the front side.
(4) Completely tighten (2).
(5) Completely tighten (3).
(6) Temporarily tighten (4).
(7) Completely tighten in the order of (5), (6),(7).
(8) Completely tighten (4).

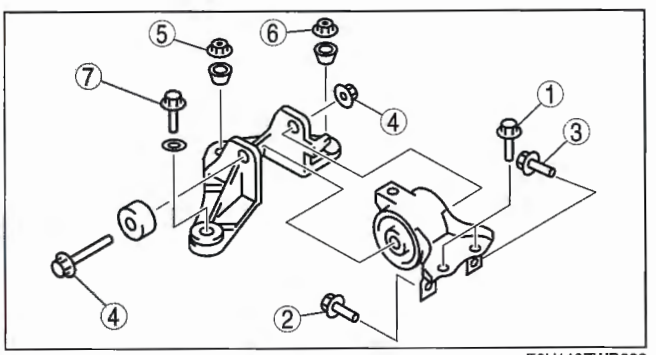

E6U110ZWB033

Tightening torque
(1)—(3) 50.6—68.5 N·m {5.2—6.9 kgf·m, 37.4—50.5 ft·lbf}
(4) 85.3—116.6 N·m {8.7—11.8 kgf·m, 63.0—85.9 ft·lbf}
(5)—(7) 66.6—93.1 N·m {6.80—9.49 kgf·m, 49.2—68.6 ft·lbf}

3. Secure the engine and transaxle using an engine jack and attachment.

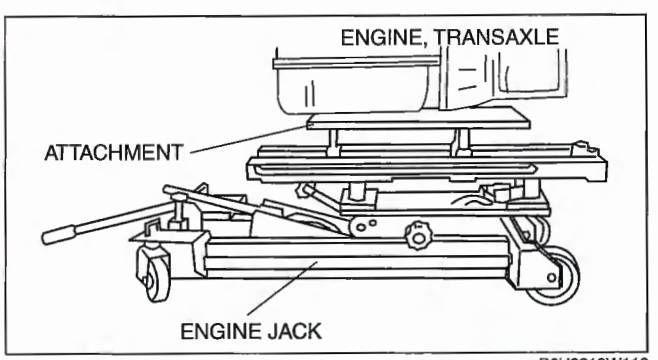

B6U2218W110

4. Remove the hoist and secure the engine and transaxle using **SST**.
5. Remove the engine jack.

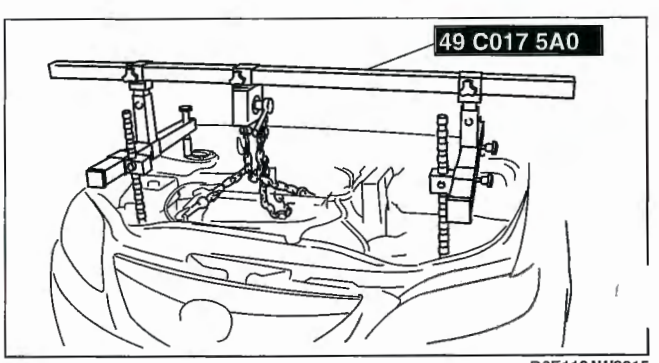

D6E110AW3015

No.1 Engine Mount Bracket Installation Note

1. Tighten No.1 engine mount bracket bolt A.

   Tightening torque
   93.1—116.6 N·m {9.5—11.8 kgf·m, 68.7—85.9 ft·lbf}

2. Tighten No.1 engine mount bracket bolt B.

   Tightening torque
   93.1—116.6 N·m {9.5—11.8 kgf·m, 68.7—85.9 ft·lbf}

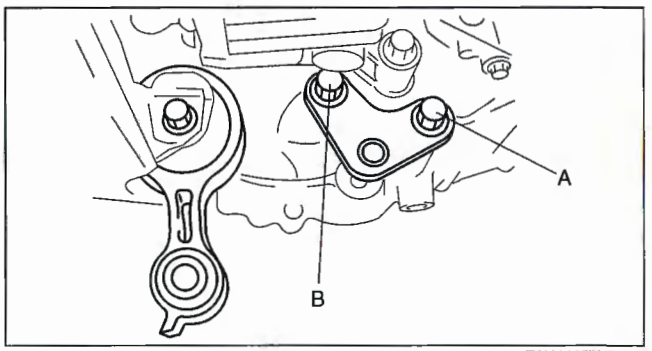

E6U110ZWB011

No.1 Engine Mount Rubber Installation Note

1. Remove through-bolt A on the No.1 engine mount bracket side.

   Tightening torque
   93.1—116.6 N·m {9.5—11.8 kgf·m, 68.7—85.9 ft·lbf}

2. Tighten through-bolt B on the crossmember side.

   Tightening torque
   93.1—116.6 N·m {9.5—11.8 kgf·m, 68.7—85.9 ft·lbf}

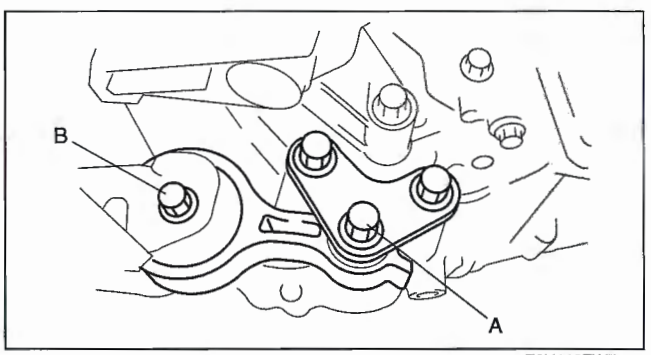

E6U110ZWB009

ENGINE DISASSEMBLY/ASSEMBLY [L3 WITH TC]

E6U011002000W17

1. Remove the engine from the transaxle. (See 05–15C–4 MANUAL TRANSAXLE REMOVAL/INSTALLATION [A26MX-R].)
2. Remove the intake-air system. (See 01–13B–4 INTAKE AIR SYSTEM REMOVAL/INSTALLATION [L3 WITH TC].)
3. Remove the exhaust system. (See 01–15B–2 EXHAUST SYSTEM REMOVAL/INSTALLATION [L3 WITH TC].)
4. Remove the generator. (See 01–17B–4 GENERATOR REMOVAL/INSTALLATION [L3 WITH TC].)
5. Remove the starter. (See 01–19B–2 STARTER REMOVAL/INSTALLATION [L3 WITH TC].)
6. Remove the CKP sensor. (See 01–40B–41 CRANKSHAFT POSITION (CKP) SENSOR REMOVAL/INSTALLATION [L3 WITH TC].)
7. Install in the reverse order of removal.

VARIABLE VALVE TIMING ACTUATORE REMOVAL/INSTALLATION [L3 WITH TC]

E6U011012490W05

Caution
- **Remove the variable valve timing actuator and camshaft sprocket as a single unit.**

Note
- The variable valve timing actuator and camshaft sprocket cannot be disassembled.

1. Referring to the valve clearance adjustment procedure, remove the variable valve timing actuator and the camshaft on the intake air side as a single unit. (See 01–10B–4 VALVE CLEARANCE INSPECTION/ ADJUSTMENT [L3 WITH TC].)
2. Remove the variable valve timing actuator.
   (1) Place alignment marks on the camshaft and variable valve timing actuator as shown in the figure so that the variable valve timing actuator is re-assembled in its original position.
   (2) Fix the camshaft in a vise.
   (3) Loosen the variable valve timing actuator installation bolt.

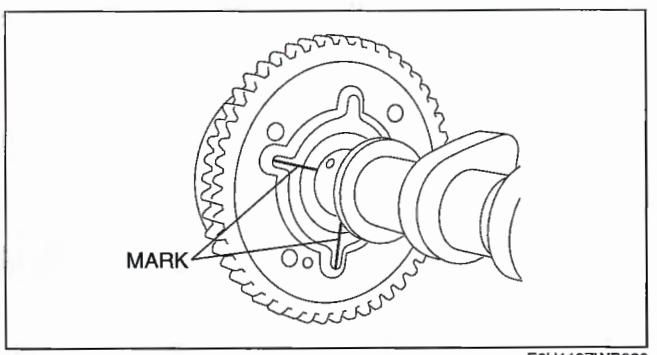

E6U110ZWB026

3. Install a new washer.
4. Install the variable valve timing actuator.
   (1) Fix the camshaft in a vise.
   (2) Align the marks on the camshaft and the variable valve timing actuator.

Caution
- **If replacing with a new variable valve timing actuator, place alignment marks in the same positions as those prior to the replacement.**

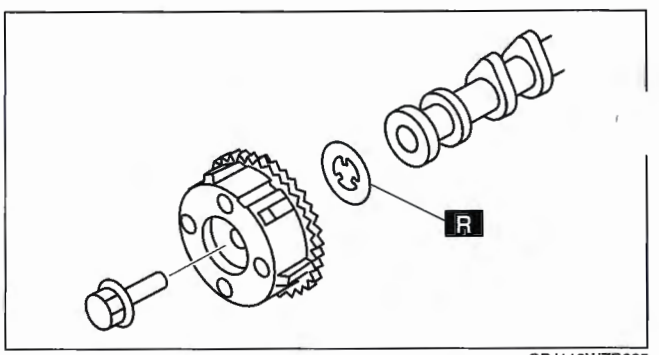

CPJ110WZB005

   (3) Tighten the variable valve timing actuator installation bolt.

Tightening torque
69—75 N·m {7.1—7.6 kgf·m, 50.9—55.3 ft·lbf}

5. Referring to the valve clearance adjustment procedure, install the variable valve timing actuator and camshaft on the intake air side as a single unit. (See 01–10B–4 VALVE CLEARANCE INSPECTION/ADJUSTMENT [L3 WITH TC].)

VARIABLE VALVE TIMING ACTUATOR INSPECTION [L3 WITH TC]

E6U011012490W06

Caution
- **Due to the precision interior construction of the variable valve timing actuator, it cannot be disassembled.**

1. Disconnect the negative battery cable.
2. Remove the charge air cooler.
3. Remove the ignition coils. (See 01–18B–2 IGNITION COIL REMOVAL/INSTALLATION [L3 WITH TC].)
4. Remove the spark plugs. (See 01–18B–3 SPARK PLUG REMOVAL/INSTALLATION [L3 WITH TC].)
5. Disconnect the OCV connectors.
6. Disconnect the CMP sensor connector.
7. Disconnect the P/S oil pump connector.
8. Remove the ventilation hose.
9. Remove cylinder head cover. (See 01–10B–12 Cylinder Head Cover Removal Note.)
10. Verify that the groove of the rotor and notch of the cover on the variable valve timing actuator are aligned and fitted.
    - If they are not aligned, rotate the crankshaft in the direction of engine rotation two times and verify that they are aligned.
      — If they will not align, replace the variable valve timing actuator.
    - If under any condition, the variable valve timing actuator always makes a hitting noise directly after the camshaft exceeds maximum lift while rotating the crankshaft two times in the direction of engine rotation, replace the variable valve timing actuator as it has not been fixed.

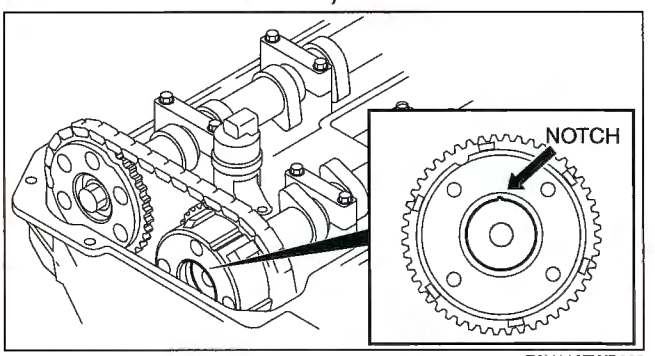

E6U110ZWB039

11. Install the cylinder head cover. (See 01–10B–20 Cylinder Head Cover Installation Note.)
12. Install the ventilation hose.
    Connect the P/S oil pump connector.
    . Connect the CMP sensor connector.
15. Connect the OCV connector.
16. Install the spark plugs. (See 01–18B–3 SPARK PLUG REMOVAL/INSTALLATION [L3 WITH TC].)
17. Install the ignition coils. (See 01–18B–2 IGNITION COIL REMOVAL/INSTALLATION [L3 WITH TC].)
18. Install the charge air cooler.
19. Connect the negative battery cable.

OIL CONTROL VALVE (OCV) REMOVAL/INSTALLATION [L3 WITH TC]

E6U011014420W05

1. Disconnect the negative battery cable.
2. Remove the charge air cooler. (See01–13B–4 INTAKE AIR SYSTEM REMOVAL/INSTALLATION [L3 WITH TC].)
3. Remove the ignition coils. (See 01–18B–2 IGNITION COIL REMOVAL/INSTALLATION [L3 WITH TC].)
4. Disconnect the OCV connectors.
5. Disconnect the CMP connectors.
6. Disconnect the P/S oil pump connector.
7. Remove the ventilation hose.
8. Remove the cylinder head cover. (See 01–10B–20 Cylinder Head Cover Installation Note.)
9. Remove the OCV installation bolt.
10. Install the OCV installation bolt.

    Tightening torque
    8.0—11.5 N·m {81.6—117.2 kgf·cm, 70.9—101.7 in·lbf}

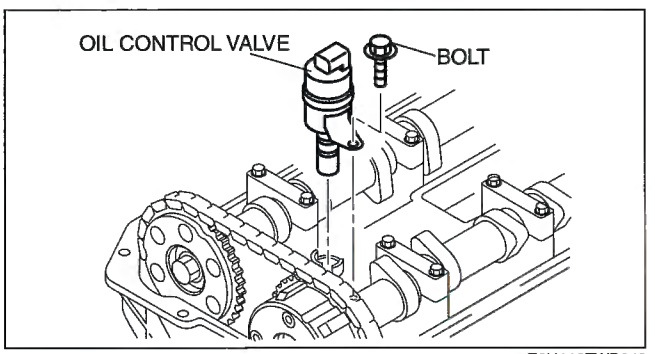

E6U110ZWB043

11. Install the cylinder head cover. (See 01–10B–20 Cylinder Head Cover Installation Note.)
12. Install the ventilation hose.
13. Connect the P/S oil pump connector.
14. Connect the CMP connector.
    Connect the OCV connector.
    . Install the spark plugs. (See 01–18B–3 SPARK PLUG REMOVAL/INSTALLATION [L3 WITH TC].)
17. Install the ignition coils. (See 01–18B–2 IGNITION COIL REMOVAL/INSTALLATION [L3 WITH TC].)
18. Install the charge air cooler.
19. Connect the negative battery cable.

OIL CONTROL VALVE (OCV) INSPECTION [L3 WITH TC]

E6U011014420W06

Unable to Keep Idling

1. Remove the OCV.
2. Verify that the spool valve inside the OCV is at the maximum valve timing retard position as shown in the figure.
   - If there is any malfunction, replace the OCV.
3. Connect the OCV connector.
4. Turn the ignition switch to the ON position.
5. Verify that the spool valve inside the OCV is at the maximum valve timing retard position.
   - If there is any malfunction, inspect the harnesses and connectors between the OCV and PCM for a short circuit.
6. Inspect the variable valve timing actuator. (See 01–10B–37 VARIABLE VALVE TIMING ACTUATOR INSPECTION [L3 WITH TC].)

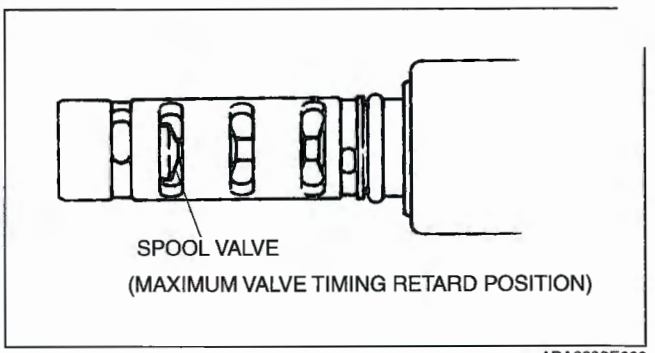

ADA2226E003

Able to Keep Idling

When using the SST (WDS or equivalent).

1. Connect the **SST** (WDS or equivalent).
2. Warm up the engine.
3. Using the VT DUTY1 simulation function, set the duty value of the OCV to **100%** and verify that the engine idles roughly or stalls.
   - If it idles roughly or stalls, verify the timing chain assembly (valve timing).
   - If it does not idle roughly or stall, perform the following inspection.

   (1) Remove the OCV and connect the OCV connector.
   (2) Turn the ignition switch to the ON position.
   (3) Using the VT DUTY1 simulation function, change the duty value for the OCV from **0%** to **100%**, and then verify that the spool valve inside the OCV operates and moves to the maximum valve timing advance position.
      — If it does not operate, inspect OCV operation and the wiring harnesses and connectors between the OCV and PCM for a short circuit or disconnection.
   (4) Inspect the hydraulic passage for leakage.

   Hydraulic passage
   Between the oil pressure switch and the OCV
   Between the OCV and the camshaft
   Oil passage inside the camshaft

   (5) If the inspected parts are normal, replace the variable valve timing actuator.

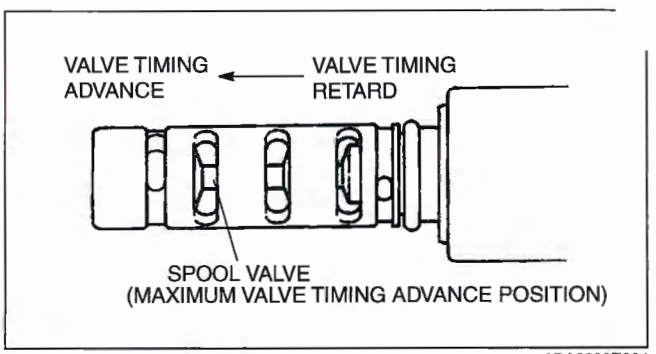

ADA2226E004

When not using the SST (WDS or equivalent)

1. Disconnect the OCV connector.
2. Start the engine and idle it.
3. When applying battery positive voltage between the oil control valve terminals, verify if the engine rough idles or stalls.
   - If it idles roughly or stalls, verify the timing chain assembly (valve timing).
   - If it does not idle roughly or stall, perform the following inspection.

   Note
   - When applying battery positive voltage between the oil control valve terminals, the connection of the positive and negative cables can be either terminal A or B.

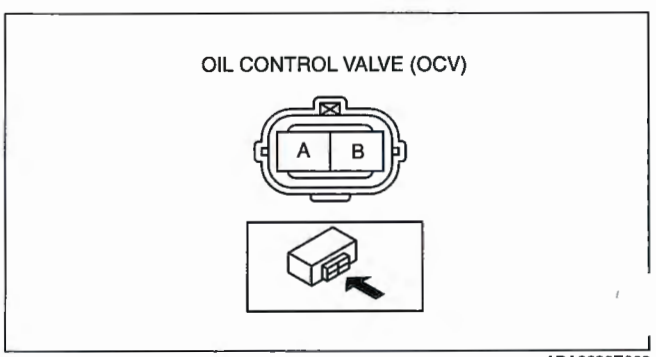

ADA2226E002

(1) Inspect OCV operation.
(2) Inspect the harnesses and connectors between the OCV and PCM for a disconnection and short circuit.
(3) Inspect the hydraulic passage for leakage.

Hydraulic passage
Between the oil pressure switch and the OCV
Between the OCV and the camshaft
Oil passage inside the camshaft

(4) If the inspected parts are normal, replace the variable valve timing actuator.

Coil Resistance Inspection

1. Disconnect the negative battery cable.
2. Disconnect the OCV connector.
3. Measure the coil resistance between terminals A and B using a tester.
   - If it is not within the specification, replace the OCV.

   Oil control valve resistance
   6.9—7.9 ohms [20°C {68°F}]

4. Connect the OCV connector.

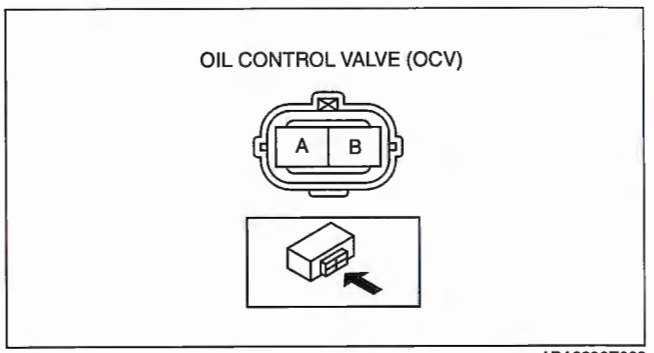

ADA2226E002

Spool Valve Operation Inspection

1. Disconnect the negative battery cable.
2. Remove the OCV.
3. Verify that the spool valve inside the OCV is at the maximum valve timing retard position as shown in the figure.
   - If there is any malfunction, replace the OCV.
4. Verify that the battery is completely charged.

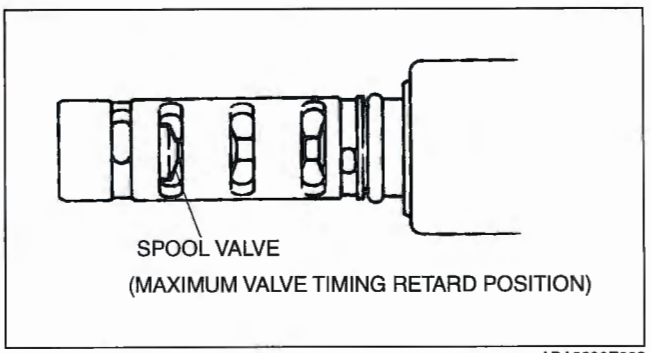

ADA2226E003

5. When battery positive voltage is applied between OCV terminals A and B, verify that the spool valve moves to the maximum valve timing retard position.
   - If there is any malfunction, replace the OCV.

   Note
   - When applying battery positive voltage between the OCV terminals, the connection of the positive and negative cables can be either terminal A or B.

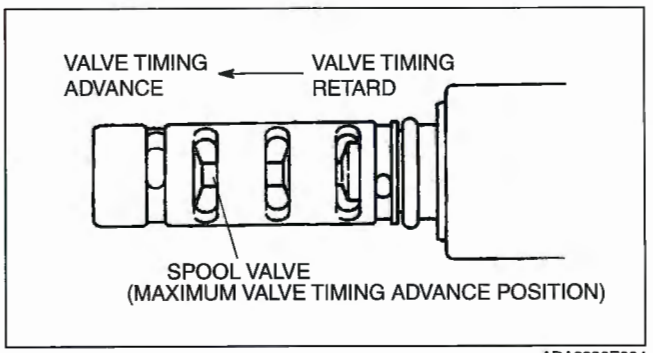

ADA2226E004

6. Stop applying battery positive voltage and verify that the spool valve returns to the maximum valve timing advance position.
   - If there is any malfunction, replace the OCV.
7. Install the OCV.

ENGINE TUNE-UP [L3 WITH TC]

E6U011002000W18

Ignition Timing Inspection

Caution
- **Do not change the crankshaft position sensor installation position. Changing the CKP sensor installation location while attempting to adjust the ignition timing could cause an engine malfunction.**

Note
- The ignition timing cannot be adjusted.
- The **SST** (WDS or equivalent) is required to verify the ignition timing.

1. Warm up the engine.
   (1) Turn off all electrical loads.
   (2) Increase the engine speed to **2,500—3,000 rpm** until the cooling fan starts running.
   (3) When the cooling fan starts running, release the accelerator pedal and wait until the cooling fan stops running.
2. Connect the **SST** (WDS or equivalent) to the DLC-2.
3. Verify the ignition timing (WDS: SPARKADV) using the PID/data monitor function of the **SST** (WDS or equivalent).

   Ignition timing (BTDC)
   10°

4. Gradually raise the engine speed and verify that the ignition timing advances.

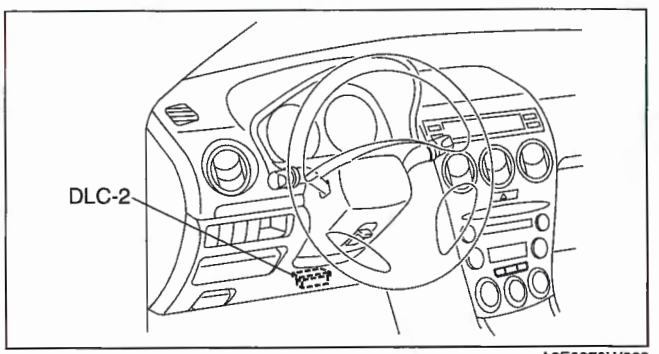

A6E3970W002

Idle Speed Inspection

Note
- Idle rotation cannot be adjusted.

1. Warm up the engine.
   (1) Turn off all electrical loads.
   (2) Increase the engine speed to **2,500—3,000 rpm** until the cooling fan starts running.
   (3) When the cooling fan starts running, release the accelerator pedal and wait until the cooling fan stops running.
2. Connect the **SST** (WDS or equivalent) to the DLC-2.
3. Verify that the engine speed (WDS: RPM) is as follows using the PID/data monitor function of the **SST (WDS or equivalent)** as follows:

   Idle speed
   No load
   650—750

   Idle-up speed (rpm) *1
   Electrical load on
   650—750
   P/S operation
   650—750
   A/C operation (medium-pressure switch off)
   700—800
   A/C operation (medium-pressure switch on)
   725—825

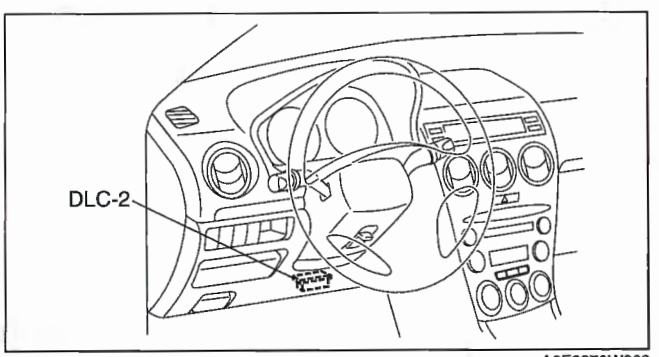

A6E3970W002

*1. When the following electrical loads are on: Headlights, rear defroster, cooling fan No.1, cooling fan No.2, and the blower motor (2-step or more.)

Idle Mixture Inspection

1. Verify that the idle speed and ignition timing are within the specification. (See 01–10B–40 Idle Speed Inspection.) (See 01–10B–40 Ignition Timing Inspection.)
2. Insert an exhaust gas analyzer to the tailpipe.
3. Verify that the CO and HC concentrations are within the regulation.

   Idle mixture
   HC concentration: Within the regulation
   CO concentration: Within the regulation

01–10C MECHANICAL [AJ]

ENGINE LOCATION INDEX [AJ] 01–10C–2
IVE BELT INSPECTION [AJ]..... 01–10C–3
Front Drive Belt **01–10C–4**
DRIVE BELT REPLACEMENT [AJ] 01–10C–4
Front Drive Belt **01–10C–4**
Water Pump Drive Belt..... **01–10C–4**
DRIVE BELT AUTO TENSIONER INSPECTION [AJ]..... 01–10C–5
Front Drive Belt Auto Tensioner..... **01–10C–5**
COMPRESSION INSPECTION [AJ].... 01–10C–6
TIMING CHAIN REMOVAL/INSTALLATION [AJ]..... 01–10C–6
Water Pump Drive Belt Pulley Removal Note **01–10C–9**
Camshaft Oil Seal Removal Note **01–10C–9**
Cylinder Head Cover (LH) Removal Note **01–10C–9**
Engine Hanger Removal Note **01–10C–9**
Cylinder Head Cover (RH) Removal Note **01–10C–10**
No.3 Engine Joint Bracket Removal Note **01–10C–10**
Crankshaft Pulley Lock Bolt Removal Note **01–10C–12**
Crankshaft Pulley Removal Note..... **01–10C–12**
Front Oil Seal Removal Note **01–10C–12**
Engine Front Cover Removal Note.... **01–10C–13**
Timing Chain Component (RH) Removal Note **01–10C–13**
Camshaft Caps (RH) Removal Note **01–10C–14**
Timing Chain Component (LH) Removal Note **01–10C–14**
Camshaft Caps (LH) Removal Note... **01–10C–15**
Timing Chain Component (LH) Installation Note..... **01–10C–16**
Chain Tensioner (LH) Installation Note..... **01–10C–17**
Timing Chain Component (RH) Installation Note..... **01–10C–18**
Chain Tensioner (RH) Installation Note..... **01–10C–20**
Crankshaft Position (CKP) Sensor Pulse Wheel Installation Note..... **01–10C–20**
Engine Front CoverInstallation Note .. **01–10C–21**
Front Oil Seal Installation Note **01–10C–21**
Crankshaft PulleyInstallation Note.... **01–10C–22**
Crankshaft Pulley Lock Bolt Installation Note..... **01–10C–22**
Cylinder Head Cover (RH) Installation Note..... **01–10C–22**
Engine Hanger Installation Note **01–10C–23**
Cylinder Head Cover (LH) Installation Note..... **01–10C–23**
Camshaft Oil SealInstallation Note ... **01–10C–23**
Water Pump Drive Belt Pulley Installation Note..... **01–10C–24**
CYLINDER HEAD GASKET REPLACEMENT [AJ] 01–10C–24
Water Bypass Tube Removal Note ... **01–10C–26**
Camshaft (RH) Removal Note..... **01–10C–26**
Cylinder Head (RH) Removal Note.... **01–10C–27**
Camshaft (LH) Removal Note..... **01–10C–27**
Cylinder Head (LH) Removal Note **01–10C–28**
Cylinder Head (LH) Installation Note **01–10C–28**
Camshaft (LH) Installation Note **01–10C–28**
Cylinder Head (RH) Installation Note **01–10C–28**
Camshaft (RH) Installation Note **01–10C–28**
HYDRAULIC LASH ADJUSTER (HLA) REMOVAL/INSTALLATION [AJ] 01–10C–29
Camshaft (RH) Removal Note..... **01–10C–29**
Rocker Arm (RH) Removal Note..... **01–10C–30**
Camshaft (LH) Removal Note..... **01–10C–30**
Rocker Arm (LH) Removal Note **01–10C–31**
Camshaft (LH) Installation Note **01–10C–31**
Camshaft (RH) Installation Note **01–10C–31**
FRONT OIL SEAL REPLACEMENT [AJ] 01–10C–32
Crankshaft Pulley Lock Bolt Removal Note **01–10C–32**
Crankshaft Pulley Removal Note **01–10C–33**
Front Oil Seal Removal Note..... **01–10C–33**
Front Oil Seal Installation Note **01–10C–33**
Crankshaft Pulley Installation Note **01–10C–34**
Crankshaft Pulley Lock Bolt Installation Note **01–10C–34**
REAR OIL SEAL REPLACEMENT [AJ] 01–10C–34
ENGINE REMOVAL/INSTALLATION [AJ] 01–10C–35
No.1 Engine Mount and Insulator Installation Note **01–10C–37**
No.3 Engine Joint Bracket and No.4 Engine Mount Bracket Removal Note **01–10C–37**
No.3 Engine Joint Bracket Installation Note **01–10C–37**
No.4 Engine Mount Bracket Installation Note **01–10C–38**
ENGINE DISASSEMBLY/ASSEMBLY [AJ] 01–10C–38
ENGINE TUNE-UP [AJ] 01–10C–39
Engine Tune-up Preparation **01–10C–39**
Ignition Timing Inspection **01–10C–39**
Idle Speed Inspection **01–10C–39**
Idle Mixture Inspection **01–10C–40**
VARIABLE VALVE TIMING ACTUATOR INSPECTION [AJ] 01–10C–40
VARIABLE VALVE TIMING ACTUATOR REMOVAL/INSTALLATION [AJ] 01–10C–40
OIL CONTROL VALVE (OCV) REMOVAL/INSTALLATION [AJ] 01–10C–41
RH bank **01–10C–41**
LH bank..... **01–10C–42**
OIL CONTROL VALVE (OCV) INSPECTION [AJ] 01–10C–42
Coil Resistance Inspection **01–10C–42**
Spool Valve Operation Inspection..... **01–10C–43**

ENGINE LOCATION INDEX [AJ]

E6U011002000W01

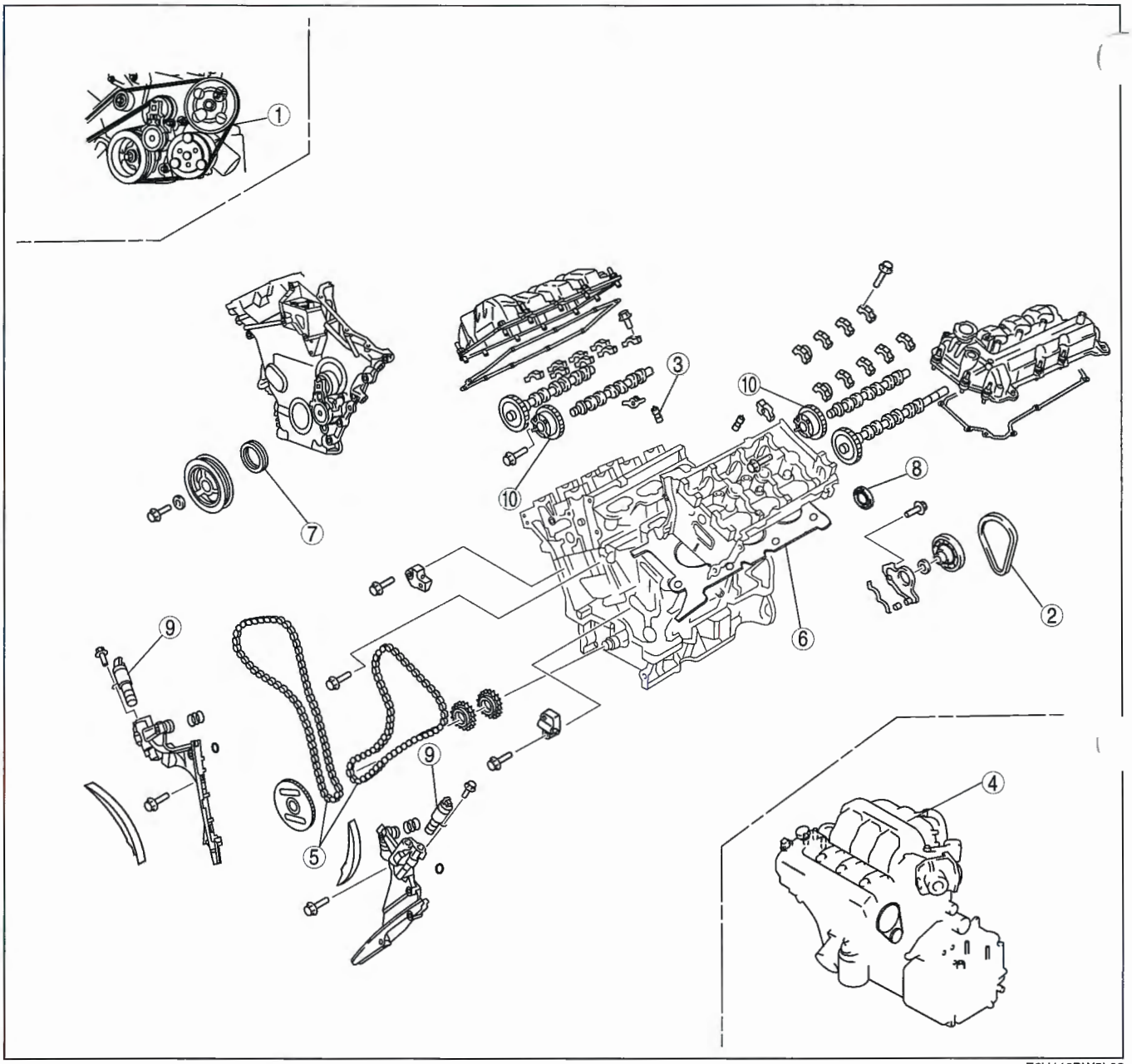

E6U110BW5L02

1	Front drive belt (See 01–10C–3 DRIVE BELT INSPECTION [AJ].) (See 01–10C–4 DRIVE BELT REPLACEMENT [AJ].) (See 01–10C–5 DRIVE BELT AUTO TENSIONER INSPECTION [AJ].)
2	Water pump drive belt (See 01–10C–3 DRIVE BELT INSPECTION [AJ].) (See 01–10C–4 DRIVE BELT REPLACEMENT [AJ].) (See 01–10C–5 DRIVE BELT AUTO TENSIONER INSPECTION [AJ].)
3	Hydraulic lash adjuster (HLA) (See 01–10C–29 HYDRAULIC LASH ADJUSTER (HLA) REMOVAL/INSTALLATION [AJ].)

4	Engine (See 01–10C–6 COMPRESSION INSPECTION [AJ].) (See 01–10C–35 ENGINE REMOVAL/ INSTALLATION [AJ].) (See 01–10C–38 ENGINE DISASSEMBLY/ ASSEMBLY [AJ].)
5	Timing chain (See 01–10C–6 TIMING CHAIN REMOVAL/ INSTALLATION [AJ].)
6	Cylinder head gasket (See 01–10C–24 CYLINDER HEAD GASKET REPLACEMENT [AJ].)
7	Front oil seal (See 01–10C–32 FRONT OIL SEAL REPLACEMENT [AJ].)

8	Rear oil seal (See 01–10C–34 REAR OIL SEAL REPLACEMENT [AJ].)
9	Oil control valve (OCV) (See 01–10C–41 OIL CONTROL VALVE (OCV) REMOVAL/INSTALLATION [AJ].) (See 01–10C–42 OIL CONTROL VALVE (OCV) INSPECTION [AJ].)
10	Variable valve timing actuator (See 01–10C–40 VARIABLE VALVE TIMING ACTUATOR REMOVAL/INSTALLATION [AJ].) (See 01–10C–40 VARIABLE VALVE TIMING ACTUATOR INSPECTION [AJ].)

DRIVE BELT INSPECTION [AJ]

E6U011015800W01

Symptom Chart

Condition	Possible Source	Action
• Drive belt cracking	• Front and water pump drive belt.	• Replace drive belt. (See 01–10C–4 DRIVE BELT REPLACEMENT [AJ])
• Drive belt chunking	• Front and water pump drive belt.	• Replace drive belt. (See 01–10C–4 DRIVE BELT REPLACEMENT [AJ])
• Drive belt noise or squeal	• Front and water pump drive belt. • Pulley(s).	• Determine what area of pulley(s) noise is coming from, then check that area with straight edge and see if each pulley is out of position in fore or aft direction, or at an angle to the straight edge.
• Drive belt does not hold tension (See 01–10C–4 Front Drive Belt)	• Front and water pump drive belt cracking or damaged.	• Inspect drive belt for cracking parallel with and through to the backing. Replace drive belt if necessary. • Check drive belt tensioner for damage and correct operation. Replace drive belt auto tensioner if necessary.
• Drive belt squeal or chirp	• Incorrect front and water pump drive belt installed. • Lubricant or other contamination on front and water pump drive belt. • Each pulley not aligned properly, damaged or not rotating freely.	• Check drive belt for correct part application. • Check drive belt for oil, coolant, power steering fluid, brake fluid or other contamination. Remove drive belt and wash with detergent and water. If drive belt cannot be cleaned or is damaged (softened) by contamination, replace drive belt. • Check each pulley for proper alignment, pulleys and related parts for proper freedom of rotation and damage. Repair pulleys and related parts if necessary.

Note

- Front and water pump drive belt deflection/tension inspection is not necessary because of the use of the drive belt auto tensioner.

Front Drive Belt

1. Verify that the front drive belt auto tensioner indicator mark does not exceeds the limit.

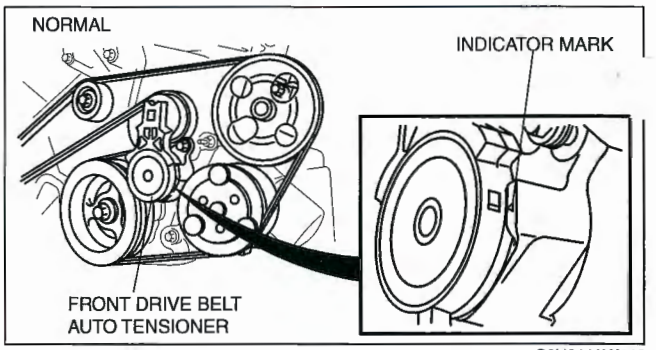

C6U0110W013

- If it exceeds the limit, replace the front drive belt.(See01–10C–4 Front Drive Belt.)

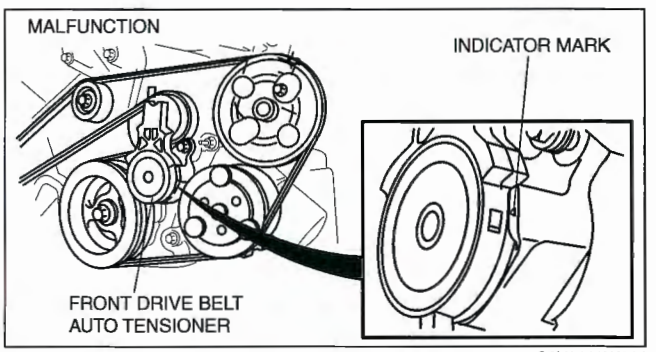

C6U0110W014

DRIVE BELT REPLACEMENT [AJ]

E6U011015800W02

Front Drive Belt

1. Remove the under cover and splash shield (RH).
2. Set a breaker bar on the center of the front drive belt auto tensioner pulley as shown.
3. Using the breaker bar, turn the center of the front drive belt auto tensioner pulley Counterclockwise to release tension to the drive belt.
4. Remove the front drive belt.
5. Reinstall the front drive belt or install a new front drive belt.
6. Verify that the front drive belt auto tensioner indicator mark does not exceed the limit. (See 01–10C–4 Front Drive Belt.)
   - If it exceeds the limit, replace the front drive belt.
7. Install the splash shield (RH).

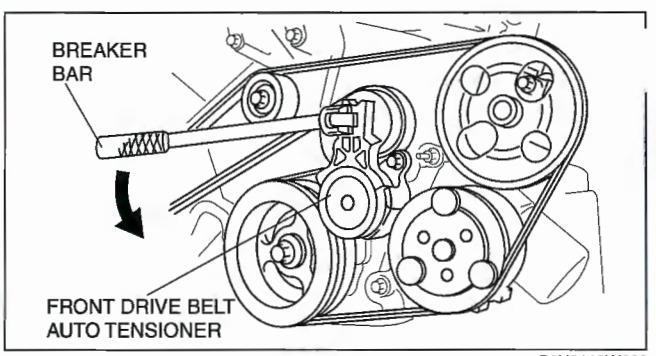

C6U0110W003

Water Pump Drive Belt

1. Remove the plug hole plate.
2. Remove the front wheel and tire (RH).
3. Remove the splash shield (RH).
4. Hold down the belt while cutting as shown in the figure.

Caution

- **To prevent the belt from snapping back, always hold down the belt while cutting it. Also, keep your face away from the belt.**
- **The belt is not reusable.**

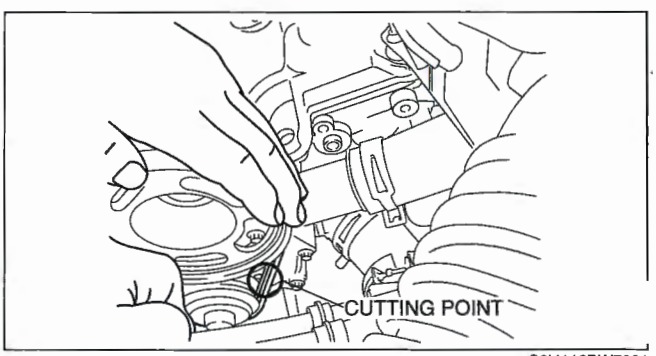

C6U110BW7001

5. Secure the water pump drive pulley and the new belt using a tie wrap.

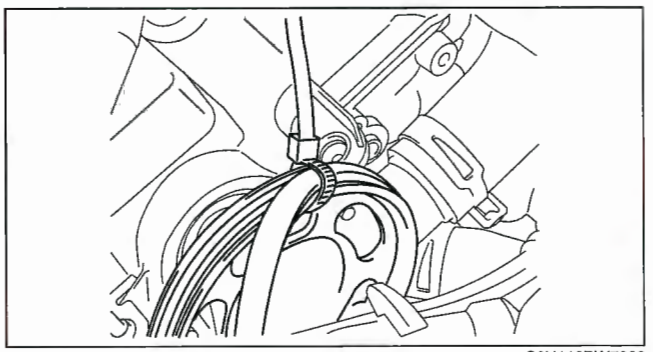
C6U110BW7002

Note
- It is acceptable to use a tie wrap with a releasable lock.

6. Rotate the crankshaft verifying that the belt engages properly.

Crankshaft rotating angle (reference)
Approx. 110

7. Verify that the belt is installed securely in the pulley groove.

Caution
- **If the belt slips while rotating the crankshaft, verify that the belt engages properly by rotating the crankshaft further.**

8. Remove the tie wrap.

Caution
- **To prevent damage to the belt, cut the tie wrap at the pulley side using the nipper or scissors when removing the tie wrap by cutting it.**

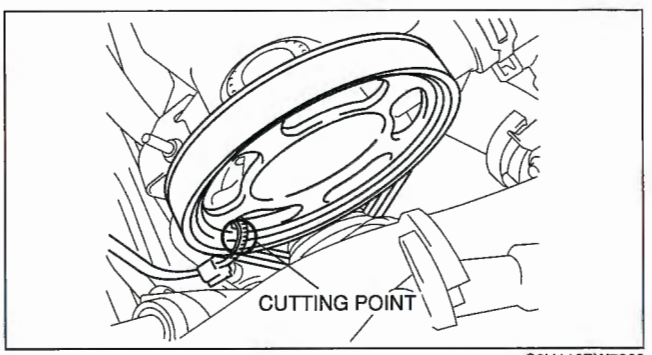

C6U110BW7003

9. Install the splash shield (RH)
10. Install the front wheel and tire (RH).
11. Install the plug hole plate.

DRIVE BELT AUTO TENSIONER INSPECTION [AJ]

E6U011015980W01

Front Drive Belt Auto Tensioner

1. Remove the front drive belt. (See 01–10C–4 Front Drive Belt.)
2. Verify that the front drive belt auto tensioner moves smoothly in the operational direction.
   - Replace the front drive belt auto tensioner if necessary.
3. Turn the front drive belt auto tensioner pulley and verify that it rotates smoothly.
   - Replace the front drive belt auto tensioner if necessary.

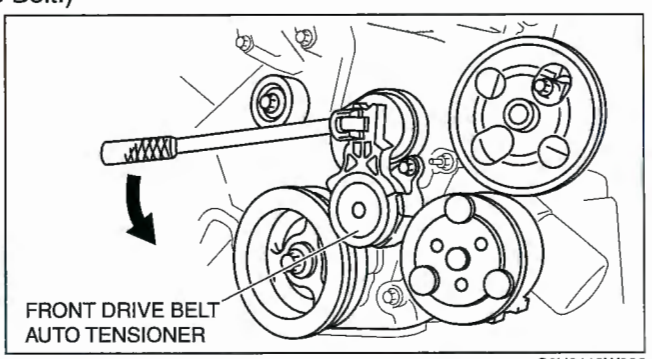

C6U0110W005

4. Install the front drive belt.

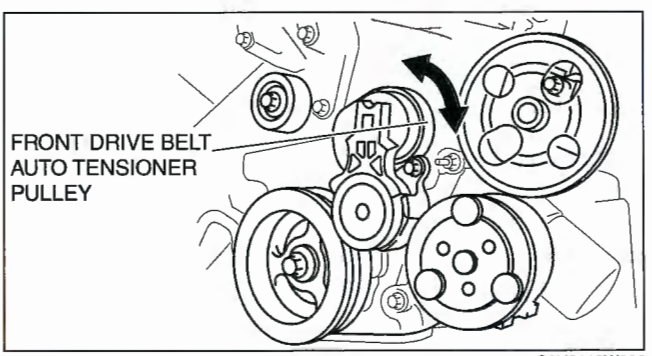

C6U0110W006

COMPRESSION INSPECTION [AJ]

E6U011002000W02

Warning
- **Hot engines and engine oil can cause severe burns. Turn off the engine and wait until it and the engine have cooled.**

1. Verify that the battery is fully charged.
   - Recharge it if necessary. (See 01–17A–3 BATTERY RECHARGING [L3, AJ].)
2. Warm up the engine to the normal operating temperature.
3. Perform "Fuel Line Safety Procedure". Leave the fuel pump relay removed. (See 01–14A–6 Fuel Line Safety Procedure.)

Warning
- **Fuel vapor is hazardous. It can very easily ignite, causing serious injury and damage. Always keep sparks and flames away from fuel.**
- **Fuel line spills and leakage are dangerous. Fuel can ignite and cause serious injures or death and damage. Fuel can also irritate skin and eyes. To prevent this, always complete the "Fuel Line Safety Procedure". (See 01–14A–6 Fuel Line Safety Procedure.)**

4. Remove the ignition coils. (See 01–18A–2 IGNITION COIL REMOVAL/INSTALLATION [L3, AJ].)
5. Remove the spark plugs.
6. Install the compression gauge into the spark plug hole.
7. Crank the engine a minimum of five compression strokes and record the highest reading. Note the approximate number of compression strokes required to obtain the highest reading.
8. Repeat the test on each cylinder, cranking the engine approximately the same number of compression strokes.
9. The indicated compression pressures are considered within specification if the lowest reading cylinder is within **75%** of the highest reading.

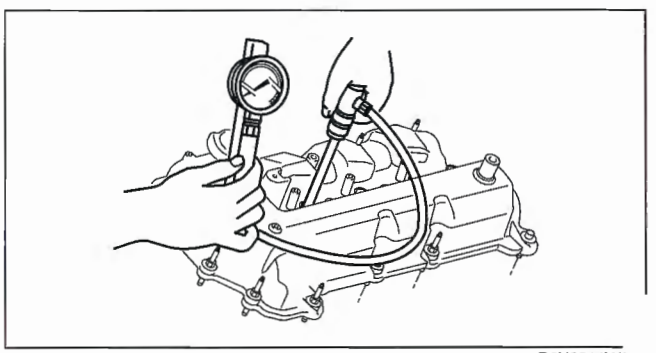

B6U2214W01

   - If the compression in one or more cylinders is low or the compression difference between cylinders exceeds the maximum, pour a small amount of clean engine oil into the cylinder and recheck the compression.
     — If the compression increases, the piston, the piston rings, or cylinder wall may be worn and overhaul is required.
     — If the compression stays low, a valve may be stuck or improperly seated and overhaul is required.
     — If two adjacent cylinders indicate low compression pressures and squirting oil on piston does not increase compression, the head gasket may be leaking between cylinders. Engine oil and/or coolant in the cylinders could result from this condition.
10. Remove the compression gauge.
11. Install the spark plugs.

Tightening torque
9—20 N·m {91—204 kgf·cm, 79—177 in·lbf}

12. Install the ignition coils. (See 01–18A–2 IGNITION COIL REMOVAL/INSTALLATION [L3, AJ].)
13. Install the fuel pump relay.

TIMING CHAIN REMOVAL/INSTALLATION [AJ]

E6U011012201W01

Warning
- **Fuel vapor is hazardous. It can very easily ignite, causing serious injury and damage. Always keep sparks and flames away from fuel.**
- **Fuel line spills and leakage are dangerous. Fuel can ignite and cause serious injures or death and damage. Fuel can also irritate skin and eyes. To prevent this, always complete the "Fuel Line Safety Procedure". (See 01–14A–6 Fuel Line Safety Procedure.)**

1. Disconnect the negative battery cable.
2. Remove the dynamic chamber. (See 01–13C–2 INTAKE AIR SYSTEM REMOVAL/INSTALLATION [AJ].)
3. Remove the ignition coils. (See 01–18A–2 IGNITION COIL REMOVAL/INSTALLATION [L3, AJ].)

4. Remove the front drive belt. (See 01–10C–4 Front Drive Belt.)
5. Remove the P/S oil pump and bracket with the P/S pipe connected, and fix the P/S oil pump using a rope to prevent it from falling. (See 06–12–28 POWER STEERING OIL PUMP REMOVAL/INSTALLATION [AJ].) Remove the A/C compressor with the A/C pipe connected, and fix the A/C compressor using a rope to prevent it from falling.
7. Disconnect the generator, but do not remove it from the vehicle. After disconnection, fix the generator using a rope to prevent it from falling. (See 01–17A–4 GENERATOR REMOVAL/INSTALLATION [L3, AJ].)
8. Remove the drive shaft (RH). (See 03–13–19 FRONT DRIVE SHAFT REMOVAL/INSTALLATION [AJ].)
9. Remove the front crossmember. (See 02–13–20 FRONT CROSSMEMBER REMOVAL/INSTALLATION.)
10. Remove the TWC (LH). (See 01–15C–2 EXHAUST SYSTEM REMOVAL/INSTALLATION [AJ].)
11. Remove the oil pan. (See 01–11A–8 OIL PAN REMOVAL/INSTALLATION [L3, AJ].)
12. Remove in the order indicated in the table.
13. Install in the reverse order of removal.
14. Start the engine and:
    - Inspect for the engine oil, engine coolant, transaxle oil and fuel leakage.
    - Verify the ignition timing, idle speed and idle mixture. (See 01–10C–39 Ignition Timing Inspection.) (See 01–10C–39 Idle Speed Inspection.) (See 01–10C–40 Idle Mixture Inspection.)
15. Perform a road test.

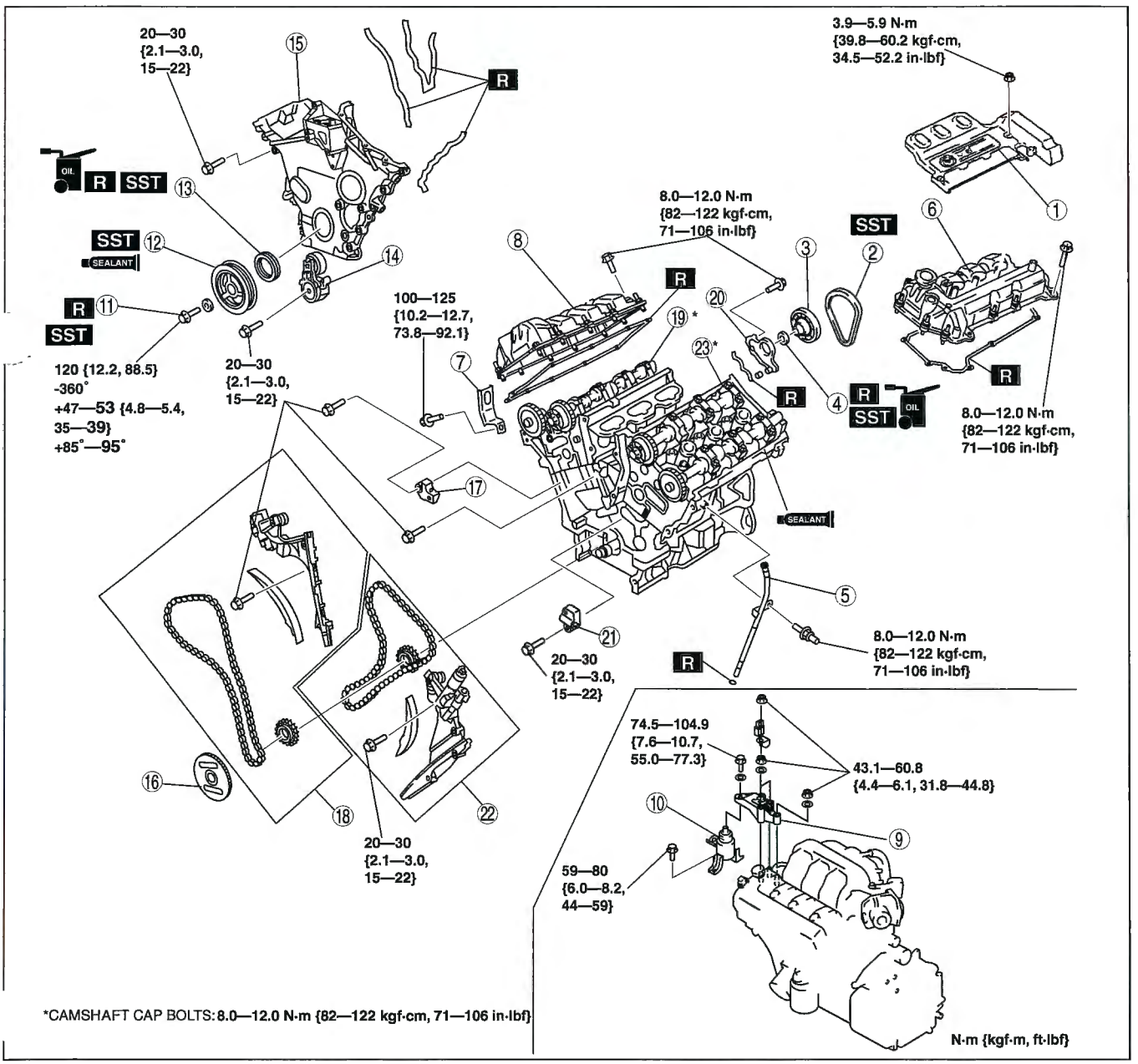

E6U110BW5L01

1	Plug hole plate
2	Water pump drive belt (See 01–10C–4 Water Pump Drive Belt.)
3	Water pump drive belt pulley (See 01–10C–9 Water Pump Drive Belt Pulley Removal Note.) (See 01–10C–24 Water Pump Drive Belt Pulley Installation Note.)
4	Camshaft oil seal (See 01–10C–9 Camshaft Oil Seal Removal Note.) (See 01–10C–23 Camshaft Oil Seal Installation Note.)
5	Oil level gauge pipe
6	Cylinder head cover (LH) (See 01–10C–9 Cylinder Head Cover (LH) Removal Note.) (See 01–10C–23 Cylinder Head Cover (LH) Installation Note.)
7	Engine hanger (RH) (See 01–10C–9 Engine Hanger Removal Note.) (See 01–10C–23 Engine Hanger Installation Note.)
8	Cylinder head cover (RH) (See 01–10C–10 Cylinder Head Cover (RH) Removal Note.) (See 01–10C–22 Cylinder Head Cover (RH) Installation Note.)
9	No.3 engine joint bracket (See 01–10C–10 No.3 Engine Joint Bracket Removal Note.) (See 01–10C–37 No.3 Engine Joint Bracket Installation Note.)
10	No.3 engine mount rubber
11	Crankshaft pulley lock bolt (See 01–10C–12 Crankshaft Pulley Lock Bolt Removal Note.) (See 01–10C–22 Crankshaft Pulley Lock Bolt Installation Note.)
12	Crankshaft pulley (See 01–10C–12 Crankshaft Pulley Removal Note.) (See 01–10C–22 Crankshaft Pulley Installation Note.)
13	Front oil seal (See 01–10C–12 Front Oil Seal Removal Note.) (See 01–10C–21 Front Oil Seal Installation Note.)
14	Front drive belt auto tensioner
15	Engine front cover (See 01–10C–13 Engine Front Cover Removal Note.) (See 01–10C–21 Engine Front Cover Installation Note.)
16	CKP sensor pulse wheel (See 01–10C–20 Crankshaft Position (CKP) Sensor Pulse Wheel Installation Note.)
17	Chain tensioner (RH) (See 01–10C–20 Chain Tensioner (RH) Installation Note.)
18	Timing chain component (RH) (See 01–10C–13 Timing Chain Component (RH) Removal Note.) (See 01–10C–18 Timing Chain Component (RH) Installation Note.)
19	Camshaft cap (RH) (See 01–10C–14 Camshaft Caps (RH) Removal Note.)
20	Camshaft oil seal housing
21	Chain tensioner (LH) (See 01–10C–17 Chain Tensioner (LH) Installation Note)
22	Timing chain component (LH) (See 01–10C–14 Timing Chain Component (LH) Removal Note.) (See 01–10C–16 Timing Chain Component (LH) Installation Note.)
23	Camshaft cap (LH) (See 01–10C–15 Camshaft Caps (LH) Removal Note.)

Water Pump Drive Belt Pulley Removal Note

1. Replace part A of the **SST** [303-009 (49 UN30 3009)] with the **SST** [303-457 (49 UN30 3457)].

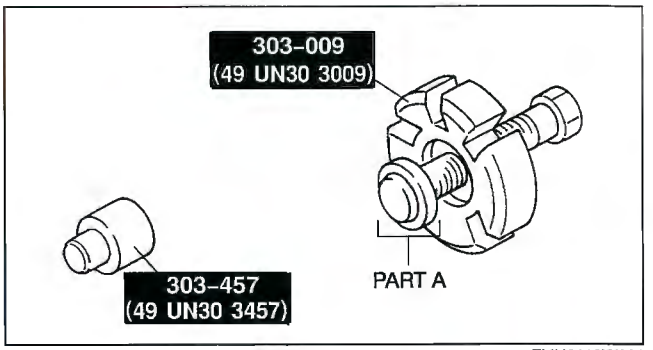

ZMU0110W001

2. Remove the water pump pulley using the **SSTs**.

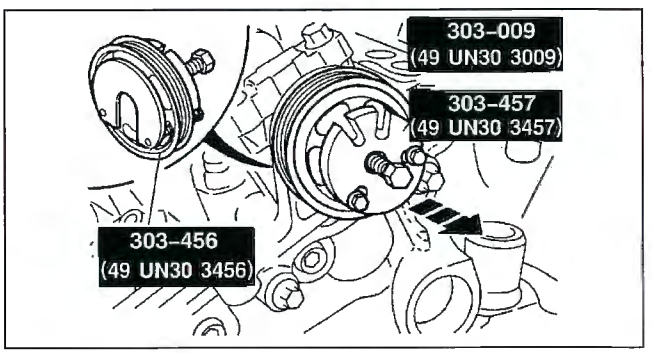

ZMU0110W002

Camshaft Oil Seal Removal Note

1. Cut the oil seal lip using a razor knife.
2. Remove the oil seal using a screwdriver as shown.

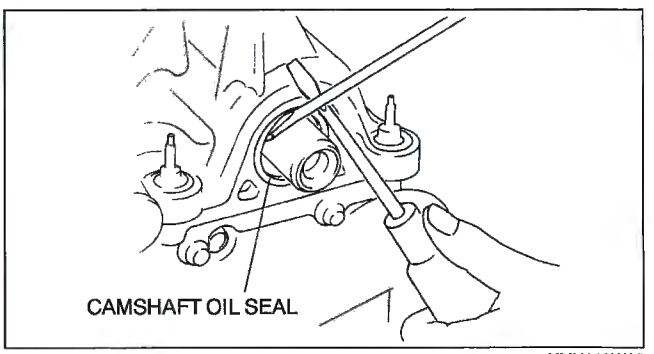

YMU110WA9

Cylinder Head Cover (LH) Removal Note

1. Remove the cylinder head cover bolts in the order shown.

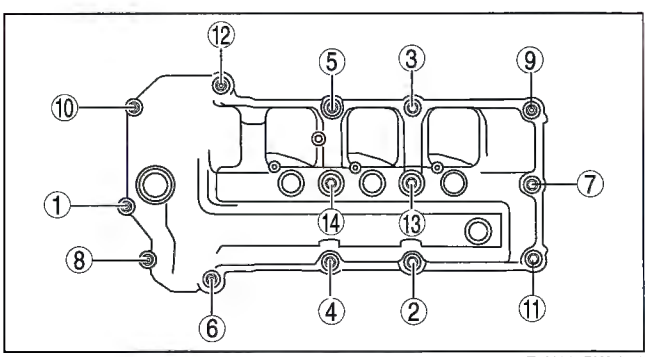

E6U110BW5L03

gine Hanger Removal Note

1. Lift up the vehicle and loosen the engine hanger installation bolts from under the vehicle.

Cylinder Head Cover (RH) Removal Note

1. Remove the cylinder head cover bolts in the order shown.

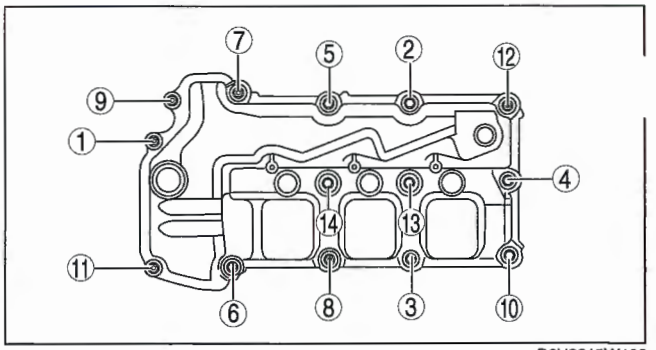

B6U2215W102

2. Remove the oil control valve (OCV) with cylinder head cover raised as shown in the figure.

   Note
   - Take care not to let the OCV tightening bolt slip into the timing chain cover when removing the OCV tightening bolt from engine front.

3. Remove the cylinder head cover.

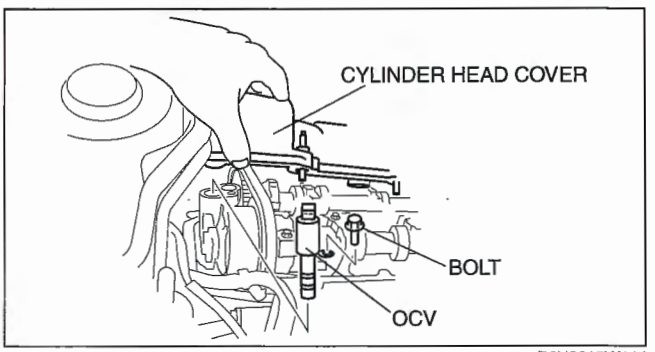

B6U2215W114

No.3 Engine Joint Bracket Removal Note

1. Remove the ABS/TCS HU/CM connector. (See 04–13–4 ABS/TCS HU/CM REMOVAL/INSTALLATION.)
2. Remove the dynamic chamber. (See 01–13C–2 INTAKE AIR SYSTEM REMOVAL/INSTALLATION [AJ].)
3. Using the bolts **M12×1.25, length 25 mm {0.984 in}** to Install the **SST** as shown (LH bank and RH bank).

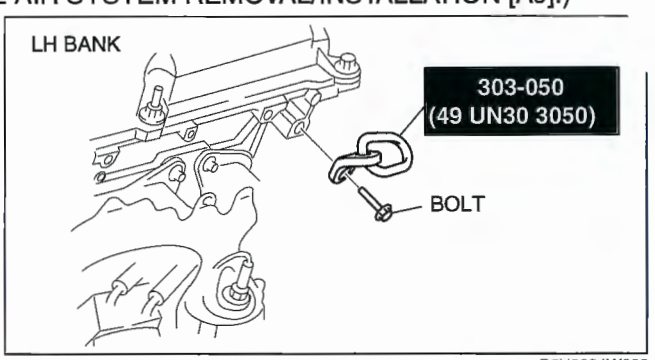

B6U2324W002

Tightening torque
100—125 N·m {10.2—12.7 kgf·m, 73.8—92.1 ft·lbf}

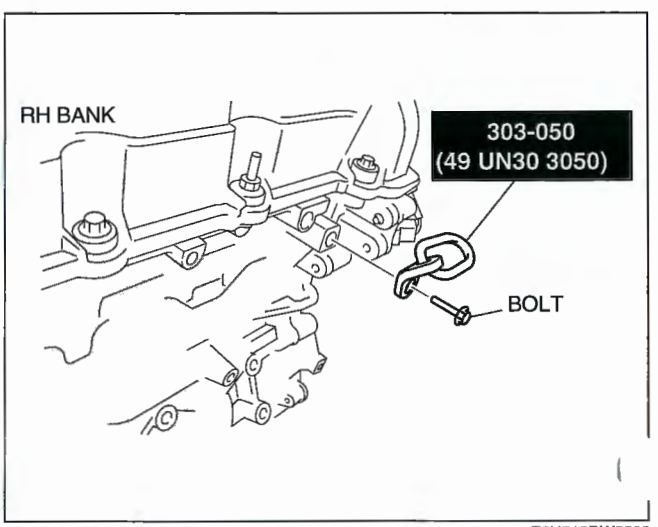

E6U515BW5502

4. Install the SST using the following procedure.

Caution
- **Refer to the SST instruction manual for the basic handing procedure.**

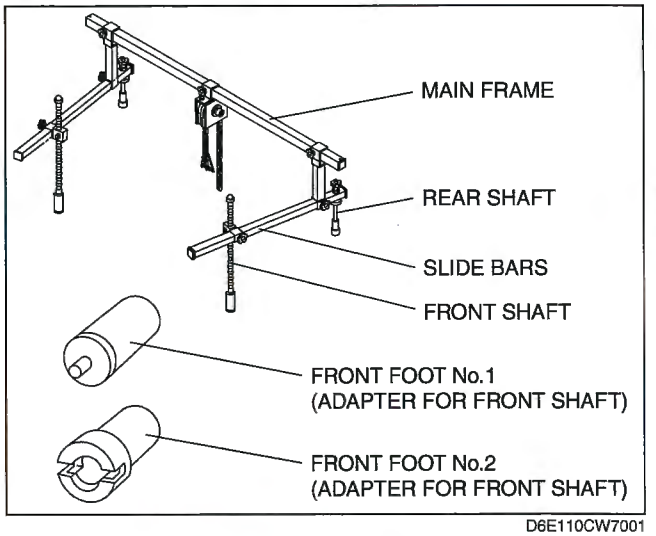

D6E110CW7001

(1) Install the right rear shaft of the **SST** to the bolt of the right shock absorber as shown in the figure.
(2) Install the left rear shaft of the **SST** to the bolt of the left shock absorber. (Identical position to the right side)

Note
- When setting the **SST** on the right side, make sure it doesn't interfere with the ABS (ABS/TCS) HU/CM or the DSC HU/CM.

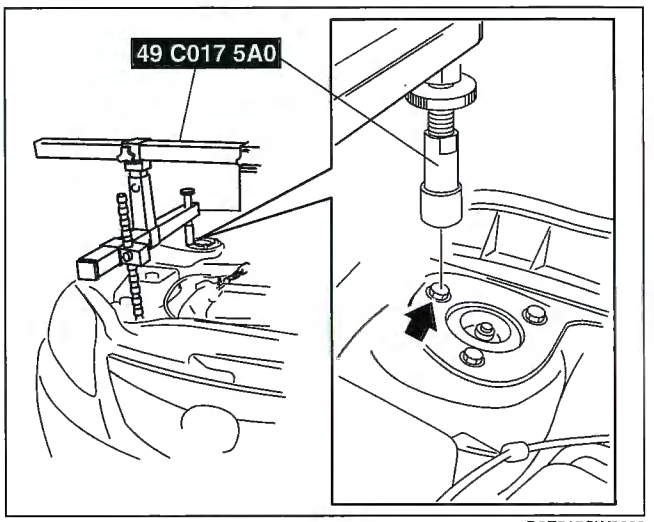

D6E515CW3008

(3) Install the left/right front shaft of the **SST** with front foot No.2 to the bolt as shown in the figure.

* : If equipped

(4) Adjust the positions of the **SST** side bars so that they are the same height (left and right) and horizontal.
(5) Make sure each joint is securely tightened.

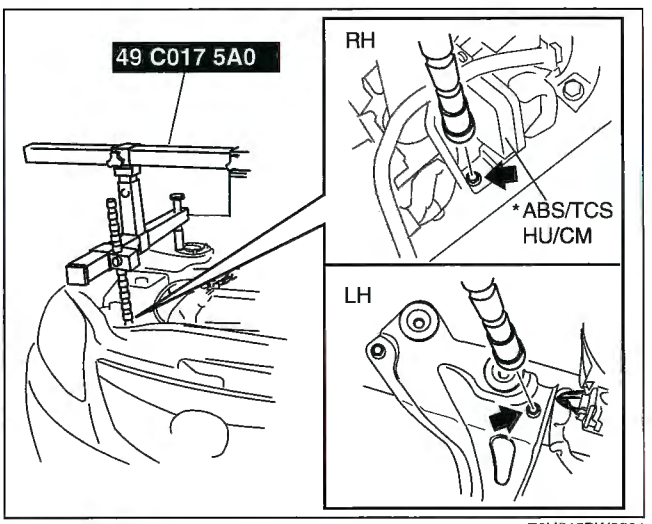

E6U515BW5501

5. Support the engine using the **SST**.

Note
- The **SST** (49 E017 5A0) can be used in place of the **SST** (49 C017 5A0).

6. Remove the No.3 engine joint bracket.

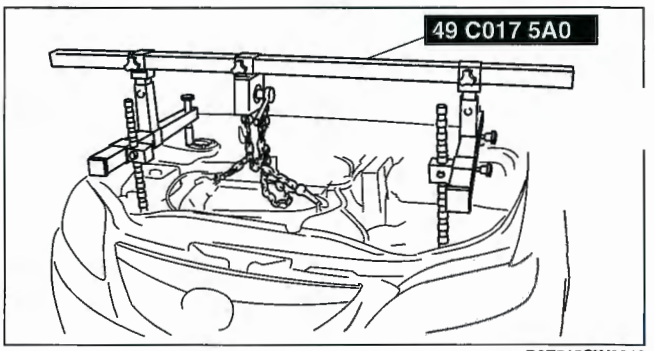

D6E515CW3010

Crankshaft Pulley Lock Bolt Removal Note
1. Remove the A/C compressor with the pipes still connected.
2. Hold the crankshaft pulley using the **SSTs**.

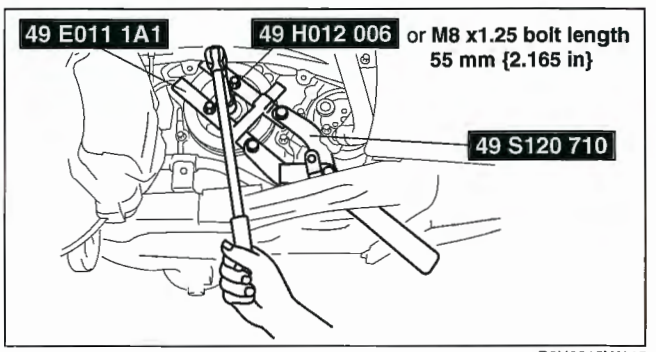

B6U2215W115

Crankshaft Pulley Removal Note
1. Remove the crankshaft pulley using the **SST**.

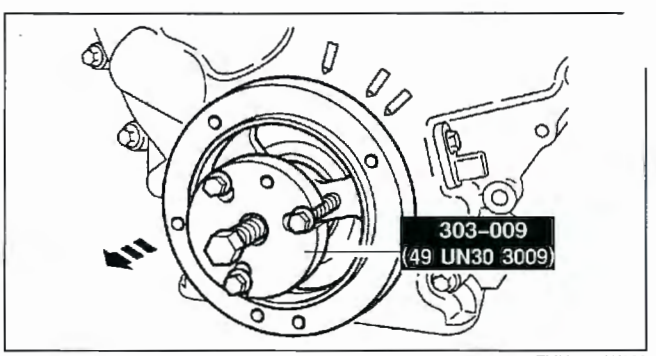

ZMU0110W003

Front Oil Seal Removal Note
1. Remove the front oil seal using a screwdriver as shown.

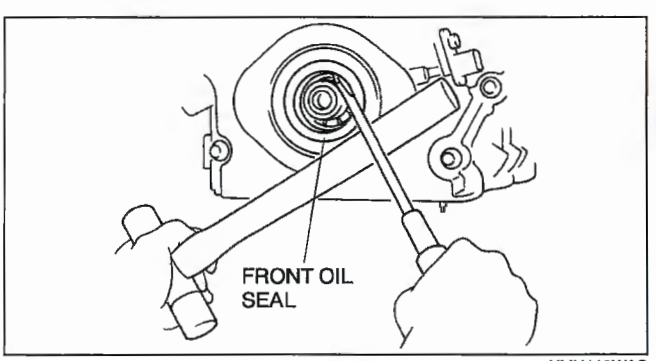

YMU110WAG

Engine Front Cover Removal Note

1. Remove the engine front cover bolts and studs in the order shown.

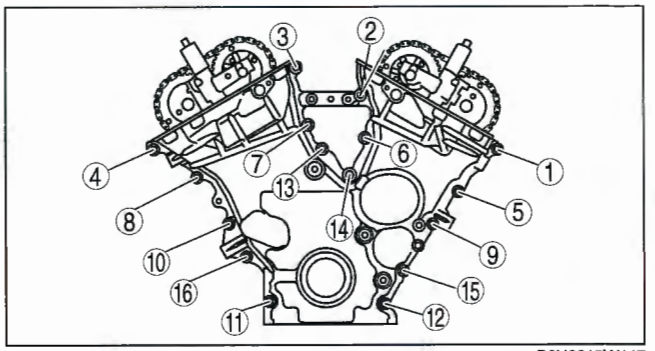

B6U2215W117

Timing Chain Component (RH) Removal Note

1. Rotate the crankshaft clockwise so that the crankshaft keyway is in the 3 o'clock position. (The camshafts (RH) are in the neutral position.)

   Caution
   - **Do not rotate the crankshaft counterclockwise. The timing chains may bind, causing engine damage.**

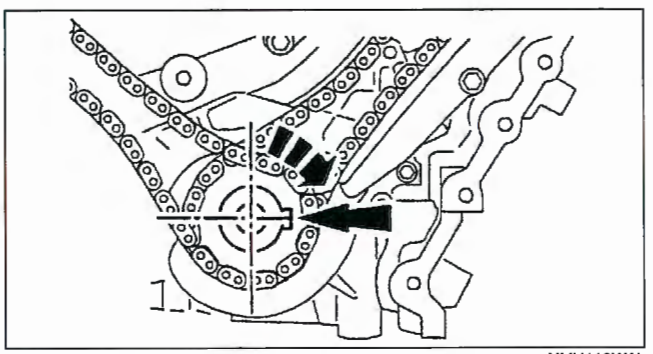

YMU110WAL

2. Place alignment marks on the timing chain corresponding to each of the alignment marks on the timing sprocket.

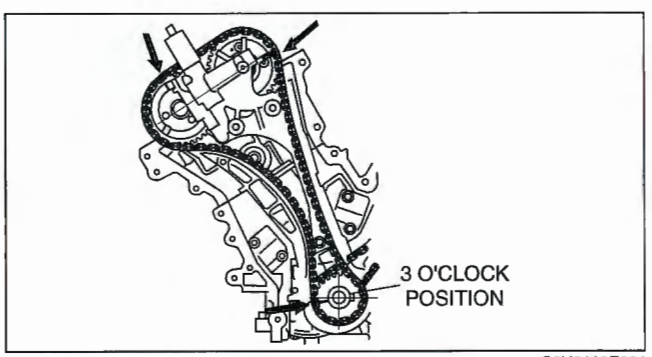

C6U0110E001

3. Remove the timing chain (RH) in the following order.
   (1) Chain tensioner
   (2) Tensioner arm
   (3) Timing chain
   (4) Chain guide
   (5) Timing chain crankshaft sprocket

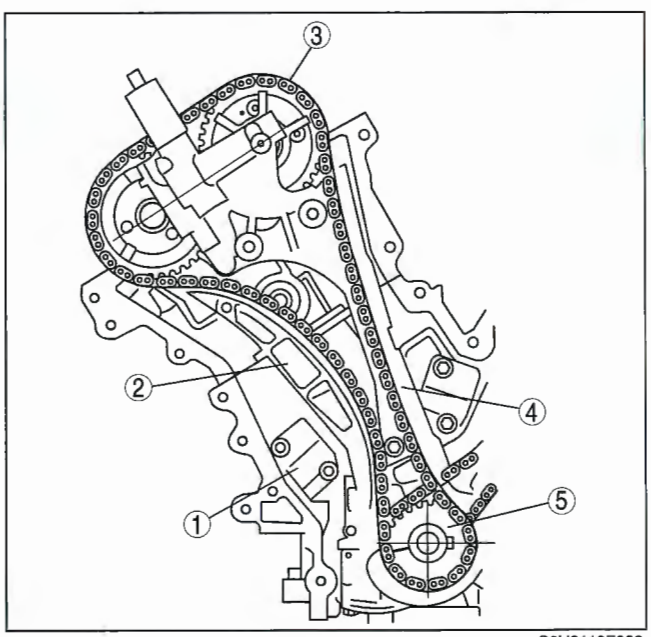

C6U0110E002

Camshaft Caps (RH) Removal Note

Caution
- **Remove the camshaft bearing thrust caps No. 1R and 5R first. Do not loosen any of the other bolt until the thrust caps are removed, or damage to the thrust caps may occur.**

Note
- Cylinder head and the camshaft bearing caps are numbered to make sure they are assembled in their original position. When removed, keep the bearing caps with the cylinder head from where they were removed together. Do not mix the caps.

1. Loosen bolts in several passes.

Note
- Do not remove bolts completely.

2. Remove the RH camshaft thrust caps 1R and 5R.

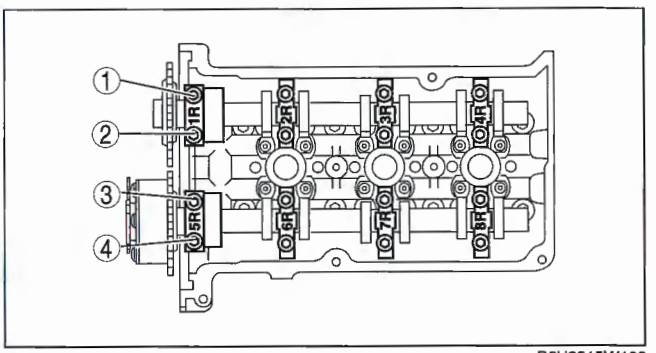

B6U2215W103

3. Loosen the remaining bolts 7–8 turns in the indicated sequence in several passes to allow the camshafts (RH) to be slowly raised.

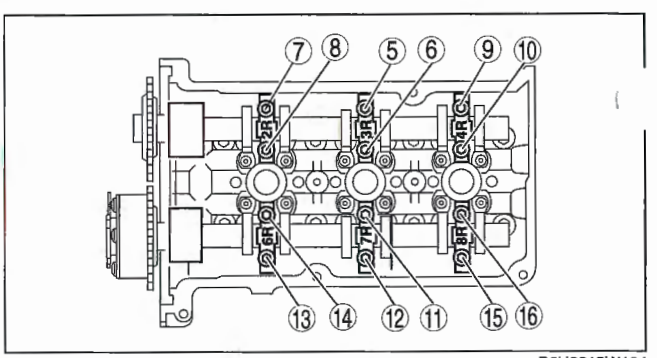

B6U2215W104

Timing Chain Component (LH) Removal Note

1. Rotate the crankshaft clockwise 1 and 2/3 turns until the keyway is in the 11 o'clock position.

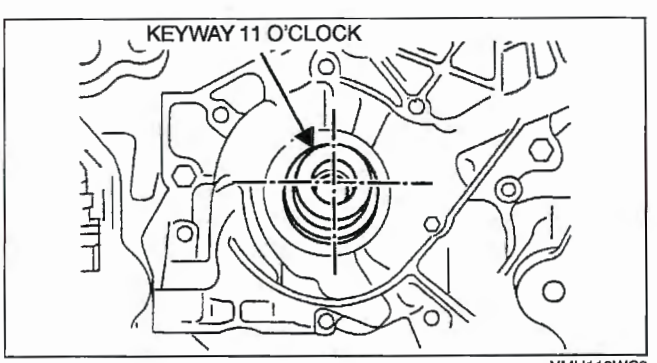

YMU110WC9

2. Place alignment marks on the timing chain corresponding to each of the alignment marks on the timing sprocket.

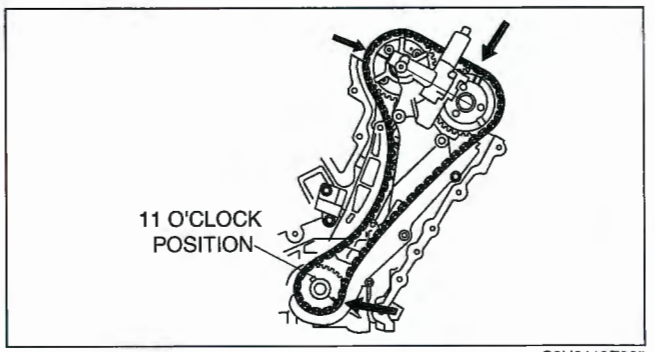

C6U0110E005

3. Remove the timing chain (LH) in the following order.
   (1) Chain tensioner
   (2) Tensioner arm
   (3) Timing chain
   (4) Chain guide
   (5) Timing chain crankshaft sprocket

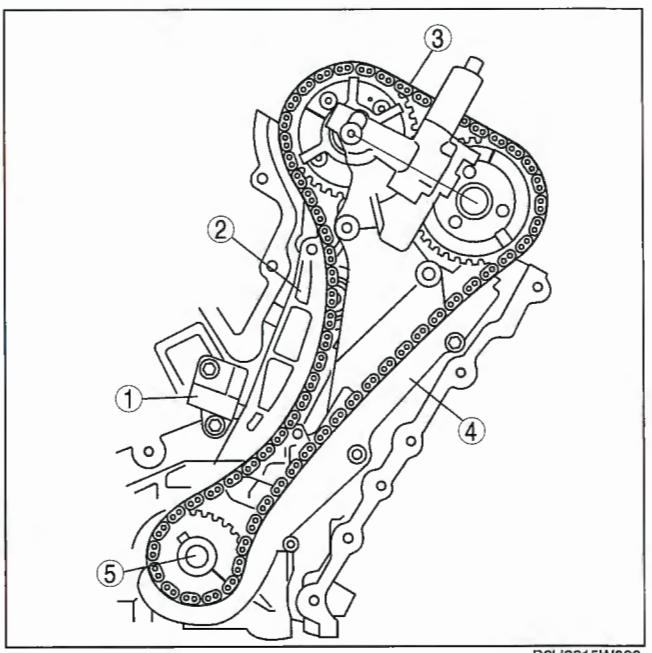

B6U2215W003

Camshaft Caps (LH) Removal Note

Caution
- **Remove the camshaft bearing thrust caps No. 1L and 6L first. Do not loosen any of the other bolts until the thrust caps are removed, or damage to the thrust caps may occur.**

Note
- Cylinder head and the camshaft bearing caps are numbered to make sure they are assembled in their original position. When removed, keep the bearing caps with the cylinder head from where they were removed together. Do not mix the caps.

1. Loosen bolts in several passes.

Note
- Do not remove bolts completely.

2. Remove the camshaft (LH) thrust caps 1L and 6L.

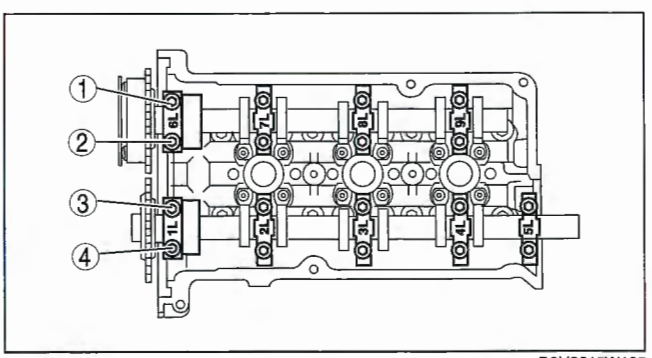

B6U2215W105

3. Loosen the remaining bolts 7—8 turns in the indicated sequence to allow the camshaft (LH) to rise.

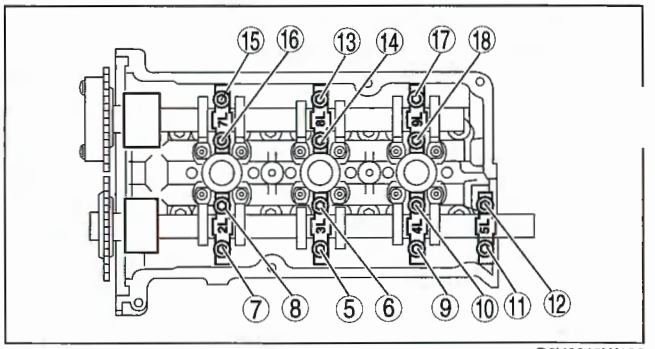

B6U2215W106

Timing Chain Component (LH) Installation Note

1. Verify that the crankshaft keyway is at 11 o'clock position.

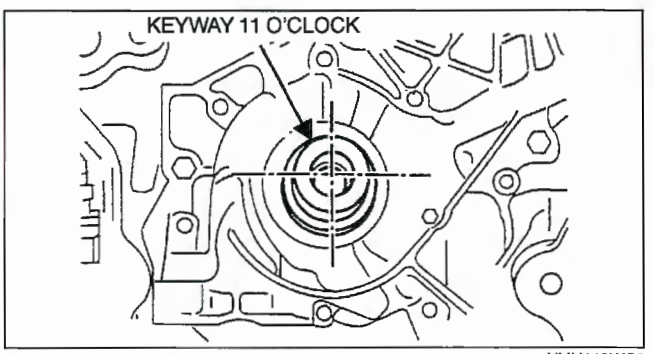

YMU110WC9

2. Position the mark on the intake camshaft to 9 o'clock position.
3. Position the mark on the exhaust camshaft to 12 o'clock position.

Note
- Install the timing chain by aligning the colored links on the timing chain with the marks on the timing sprockets.

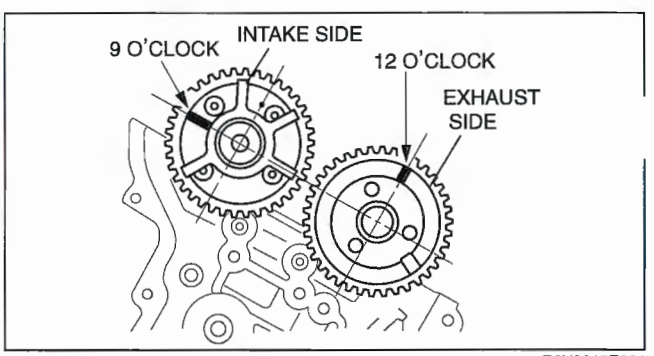

B6U2215E001

4. Install the timing chain (LH) in the following order.
   (1) Timing chain crankshaft sprocket
   (2) Chain guide
   (3) Timing chain
   (4) Tensioner arm
   (5) Chain tensioner

Note
- The chain guide should be installed to the actuator and allowed to hang freely when the bolts are installed. Do not hold the chain guide in an upward position when the bolts are installed. The actuator causes a wear O-ring and this installation method will allow that wear to continue.

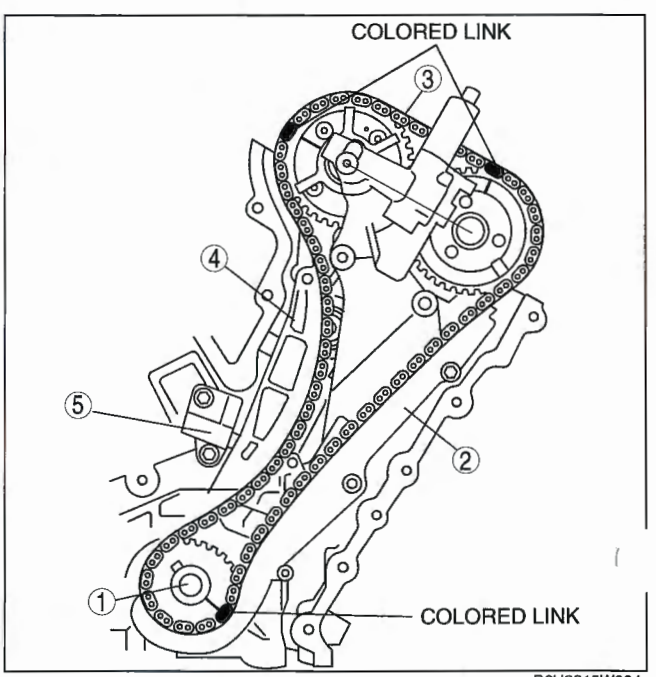

B6U2215W004

Note

- If timing marks in the timing chains are not evident, use a permanent-type marker to mark the crankshaft and camshaft timing marks on the timing chain.
  1. Mark any link to use as the crankshaft timing mark.
  2. Count 29 links from the crankshaft timing mark and mark as the exhaust camshaft sprocket timing mark.
  3. Continue counting to 42 mark the link as the intake camshaft sprocket timing mark.

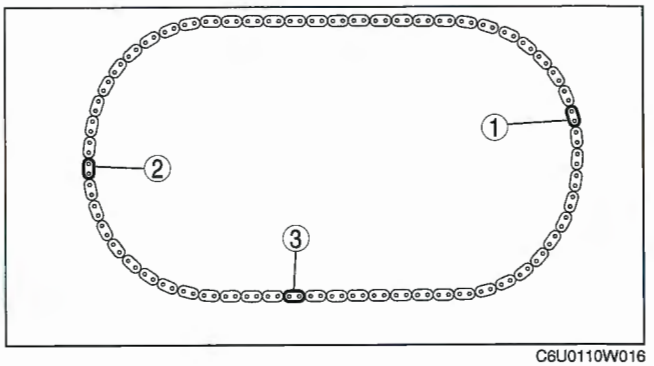

C6U0110W016

Caution

- **Install the camshaft journal thrust caps last, or damage to the thrust caps may occur.**

5. Tighten the bearing caps evenly in the order shown in several passes.

Note

- After adjusting the camshaft end play using the thrust caps 1L and 6L, tighten the other bearing caps.

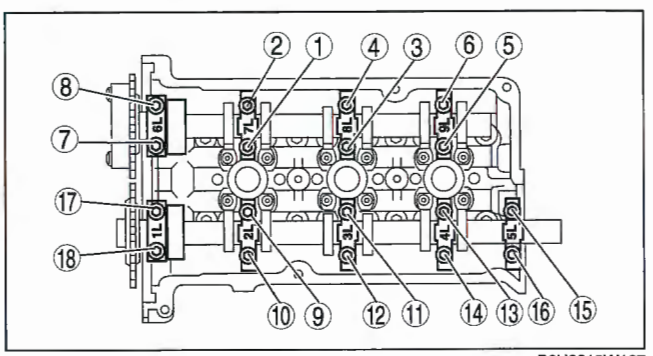

B6U2215W107

ain Tensioner (LH) Installation Note

1. Set the chain tensioner (LH) in a vise with jaw protectors.

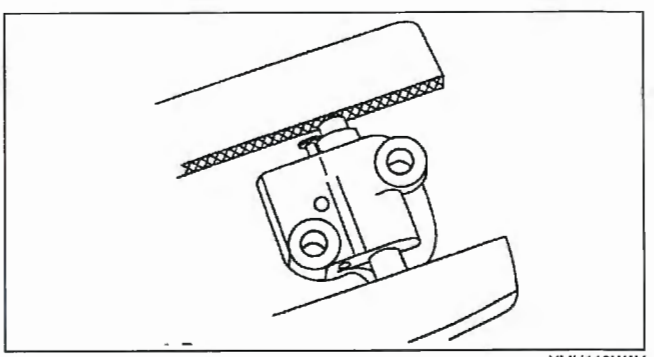
YMU110WAV

2. Using a thin screwdriver, hold the chain tensioner (LH) ratchet lock mechanism away from the ratchet stem.

Note

- The piston should retract with minimal force. If binding occurs, remove the tensioner from the vise and reset it in the vise.

3. Slowly compress the tensioner piston.

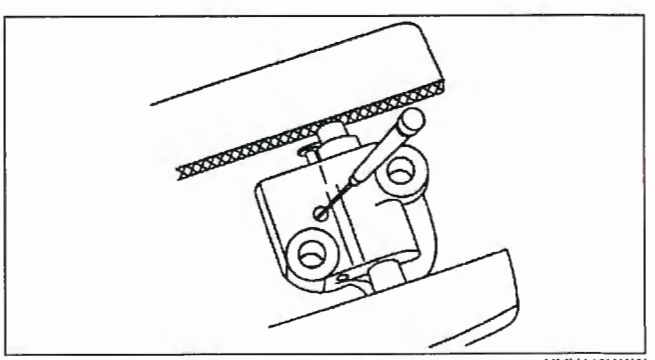
YMU110WAW

4. Hold the tensioner piston using a **1.5 mm {0.059 in}** wire or paper clip.

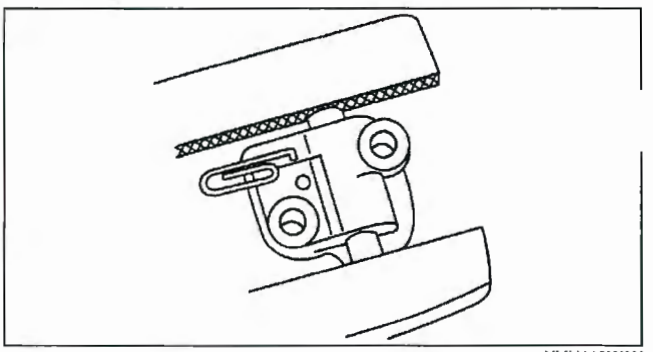
YMU110WAX

5. Install the chain tensioner (LH) and remove the retaining wire.

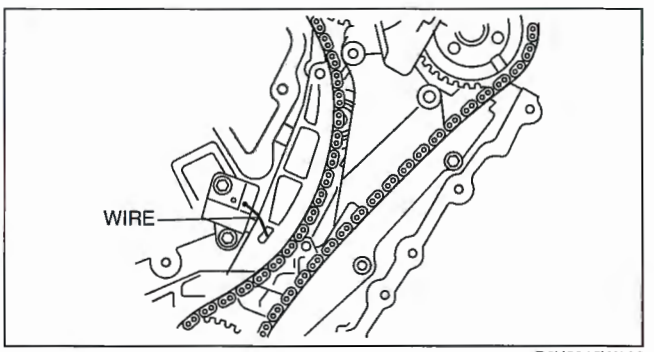

B6U2215W006

Timing Chain Component (RH) Installation Note

1. Rotate the crankshaft clockwise until the keyway is in the 3 o'clock position.

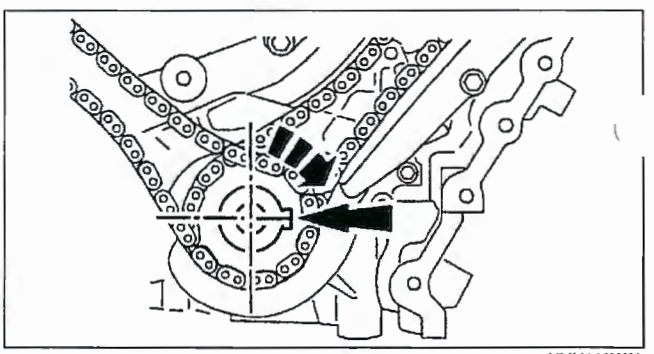
YMU110WAL

2. Position the mark on the exhaust camshaft to 12 o'clock position.
3. Position the mark on the intake camshaft to 3 o'clock position.

Note

- Install the timing chain (RH) by aligning the colored links on the timing chain (RH) with the marks on the timing sprockets.

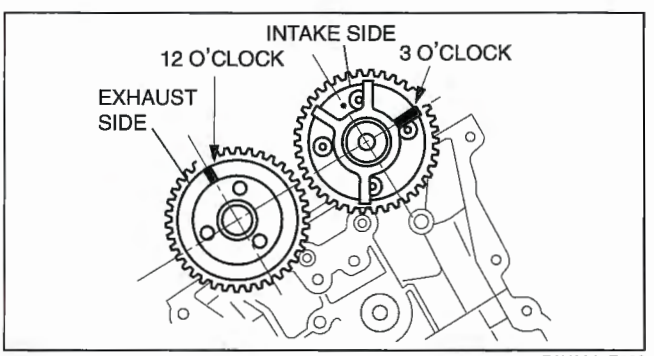

B6U2215E003

4. Install the timing chain (RH) in the following order.
   (1) Timing chain crankshaft sprocket
   (2) Chain guide
   (3) Timing chain
   (4) Tensioner arm
   (5) Chain tensioner

Note
- The chain guide should be installed to the actuator and allowed to hang freely when the bolts are installed. Do not hold the chain guide in an upward position when the bolts are installed. The actuator causes a wear O-ring and this installation method will allow that wear to continue.

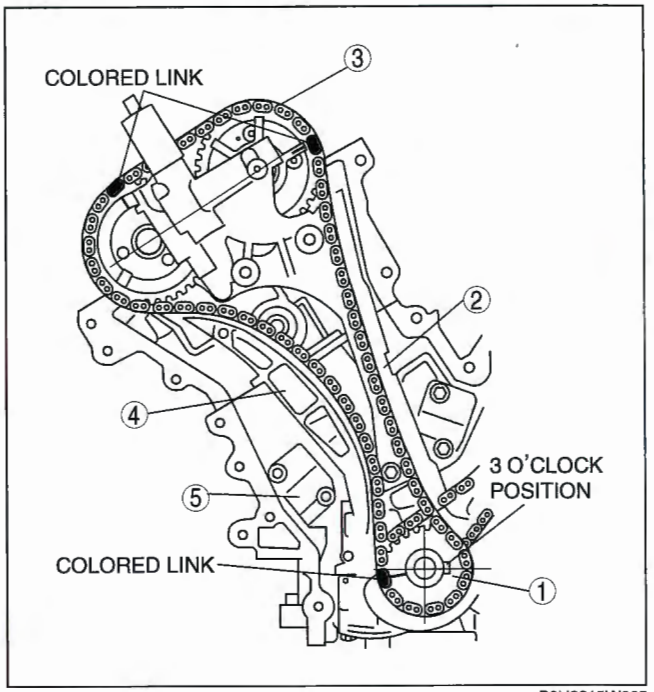

B6U2215W005

Note
- If timing marks in the timing chains are not evident, use a permanent-type marker to mark the crankshaft and camshaft timing marks on the timing chain.
  1. Mark any link to use as the crankshaft timing mark.
  2. Count 29 links from the crankshaft timing mark and mark as the exhaust camshaft sprocket timing mark.
  3. Continue counting to 42 mark the link as the intake camshaft sprocket timing mark.

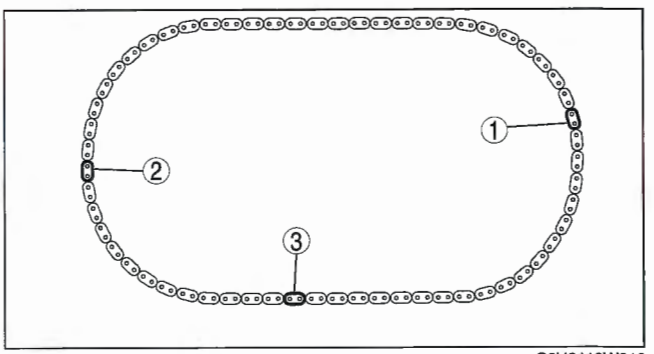

C6U0110W016

Caution
- **Install the camshaft journal thrust caps last, or damage to the thrust caps may occur.**

5. Tighten the bearing caps evenly in several passes in the order shown.

Note
- After adjusting the camshaft end play using the thrust caps 1R and 5R, tighten the other bearing caps.

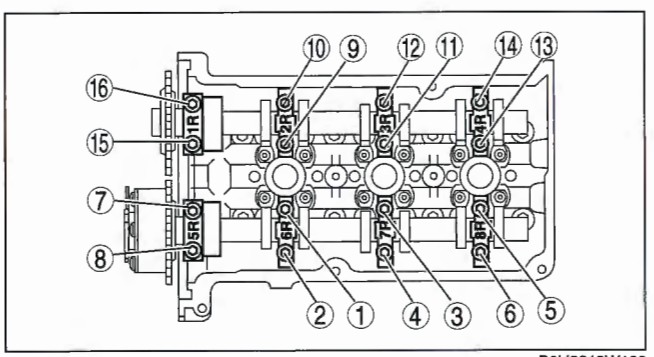

B6U2215W108

Chain Tensioner (RH) Installation Note

1. Set the chain tensioner (RH) in a vise with jaw protectors.

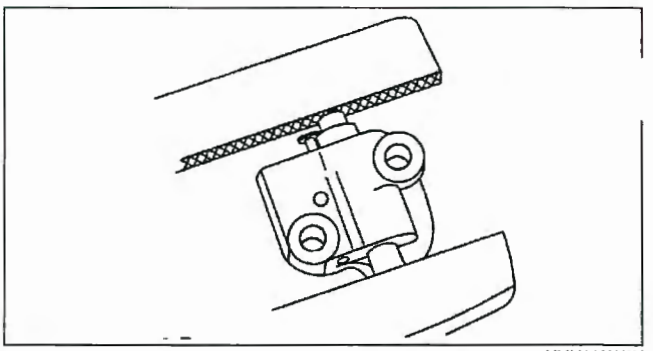

YMU110WAV

2. Using a thin screwdriver, hold the chain tensioner (RH) ratchet lock mechanism away from the ratchet stem.

   Note
   - The piston should retract with minimal force. If binding occurs, remove the tensioner from the vise and reset it in the vise.

3. Slowly compress the tensioner piston.

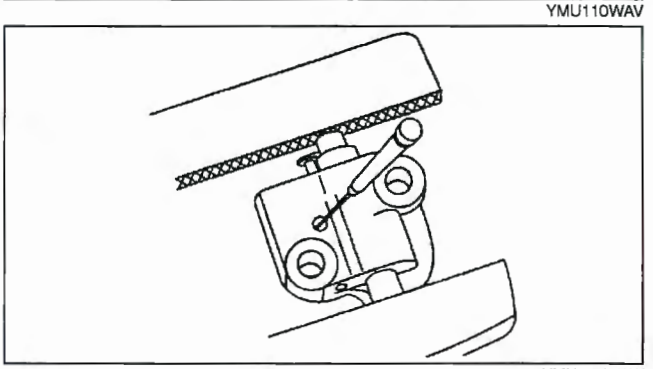

YMU110WAW

4. Hold the tensioner piston using a **1.5 mm {0.059 in}** wire or paper clip.

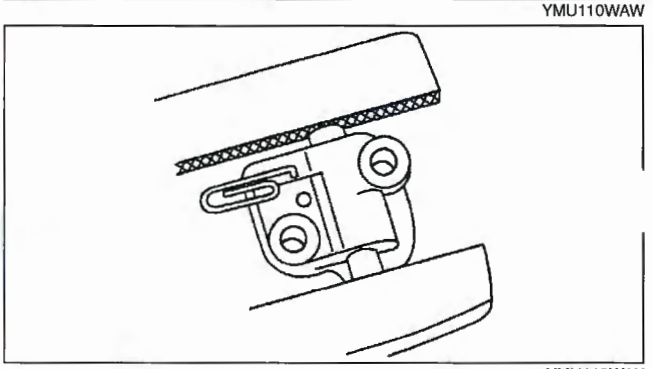

YMU110WAX

5. Install the chain tensioner (RH) and remove the retaining wire.

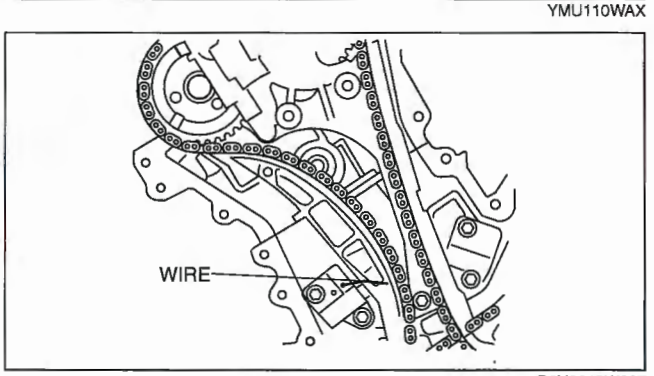

B6U2215W007

Crankshaft Position (CKP) Sensor Pulse Wheel Installation Note

1. With the "FRONT" mark of the pulse wheel facing you, install the crankshaft position (CKP) sensor pulse wheel using the keyway on the same side as the empty space shown in figure.

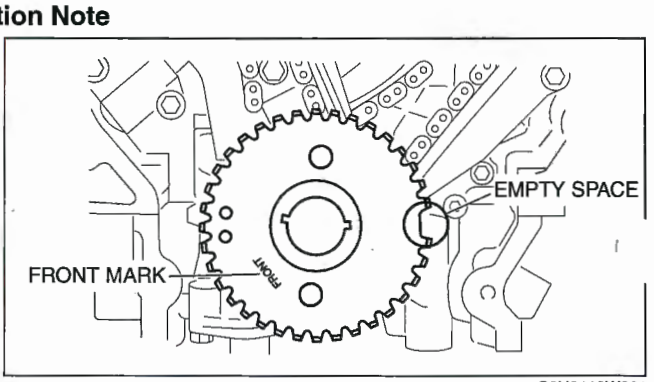

C6U0110W001

Engine Front Cover Installation Note

1. Apply a **6 mm {0.24 in}** dot of silicone sealant at the indicated location.

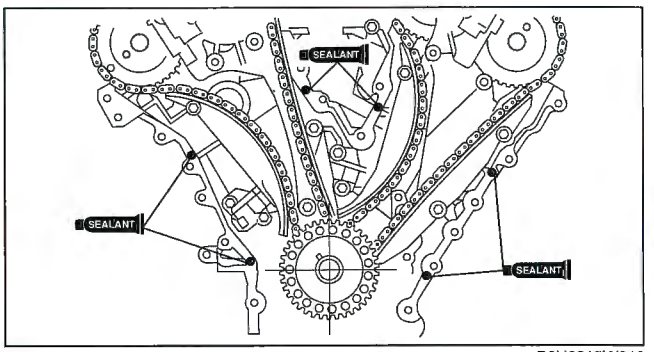

B6U2215W010

2. Install the remaining bolts and studs, and then tighten all bolts and studs in the order shown.

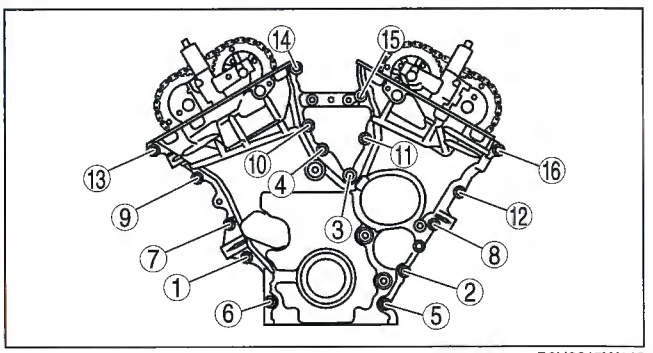

B6U2215W116

Front Oil Seal Installation Note

1. Assemble the front oil seal using part A of the **SST**[303-335 (49 UN30 3335)] and the **SST** [303-102 (49 UN01 002)].
2. Apply clean engine oil to the oil seal.
3. Push the oil seal slightly in by hand.

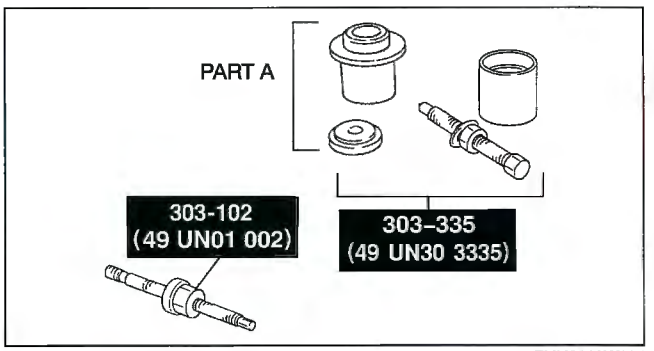

ZMU0110W004

4. Compress the oil seal using the **SSTs**.

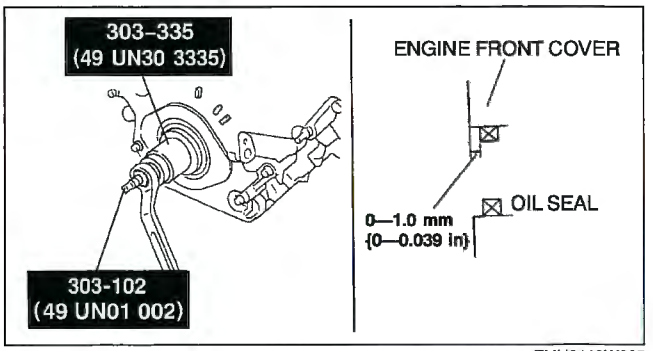

ZMU0110W005

Crankshaft Pulley Installation Note

1. Seal the keyway in the crankshaft pulley using silicone sealant.
2. Install the crankshaft pulley using the **SST** and the crankshaft pulley lock bolt washer.

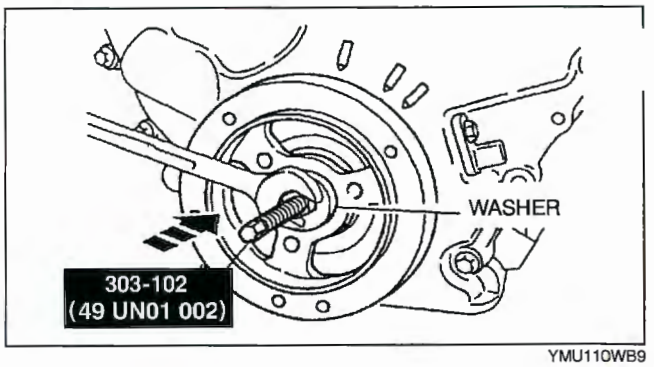

YMU110WB9

Crankshaft Pulley Lock Bolt Installation Note

1. Hold the crankshaft pulley using the **SSTs.**
2. Tighten the new crankshaft pulley lock bolt in four steps.
   (1) Tighten to **120 N·m {12.2 kgf·m, 88.5 ft·lbf}**.
   (2) Loosen **360°** (one full turn) in reverse order.
   (3) Tighten to **47—53 N·m {4.8—5.4 kgf·m, 35—39 ft·lbf}**.
   (4) Tighten **85°—95°**.
3. Install the A/C compressor.

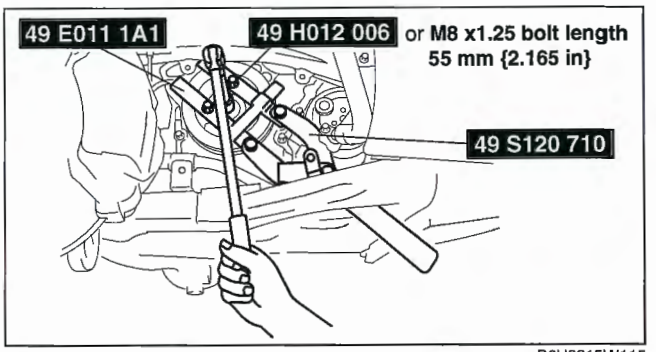

B6U2215W115

Cylinder Head Cover (RH) Installation Note

1. Apply silicone sealant to the mating faces as shown.
2. Install the cylinder head cover with a new gasket.

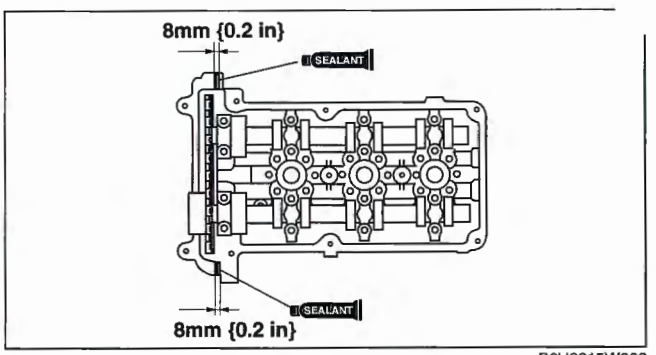

B6U2215W008

3. Install the oil control valve (OCV) with cylinder head cover raised as shown in the figure.

   Note
   - Take care not to let the OCV tightening bolt slip into the timing chain cover when Installing the OCV tightening bolt from engine front.

   Tightening torque
   8.0—12.0 N·m {82—122 kgf·cm, 71—106 in·lbf}

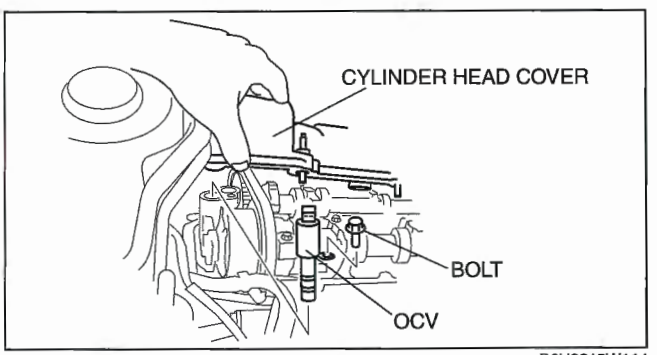

B6U2215W114

4. Install the cylinder head cover.

5. Tighten the bolts in the order shown.

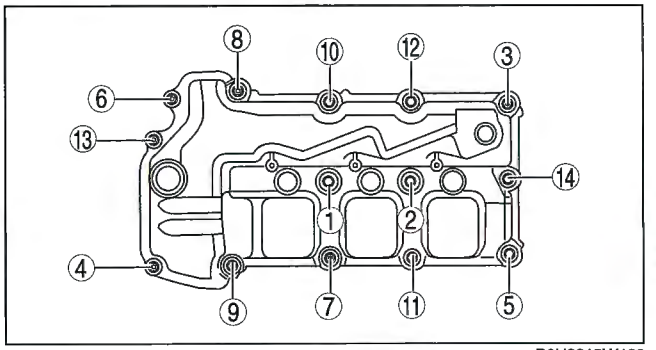

B6U2215W109

Engine Hanger Installation Note

1. Lift up the vehicle and tighten the engine hanger installation bolts from under the vehicle.

Cylinder Head Cover (LH) Installation Note

1. Apply silicone sealant to the mating faces as shown.
2. Install the cylinder head cover with a new gasket.

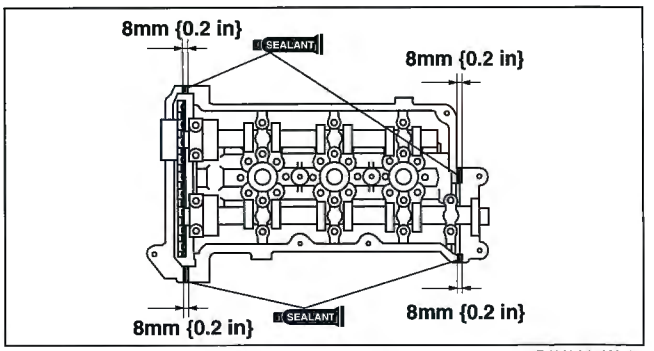

B6U2215W009

Tighten the bolts in the order shown.

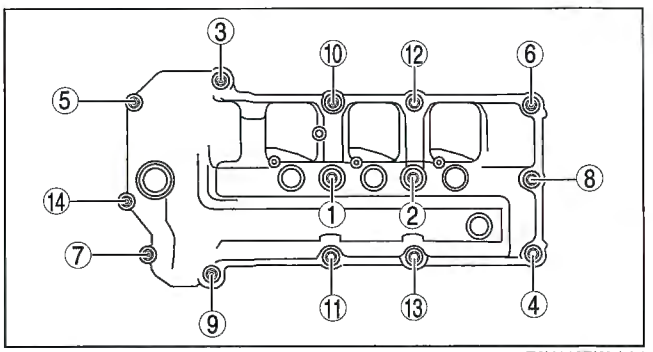

E6U110BW5L04

Camshaft Oil Seal Installation Note

1. Apply clean engine oil to the camshaft oil seal.
2. Install the camshaft oil seal using the **SSTs**.

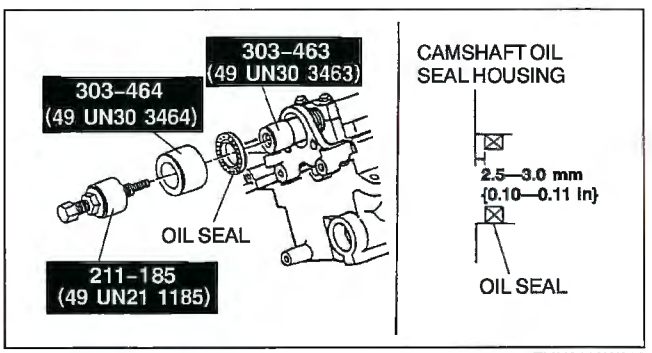

ZMU0110W006

Water Pump Drive Belt Pulley Installation Note

1. Install the water pump pulley using the **SST**.

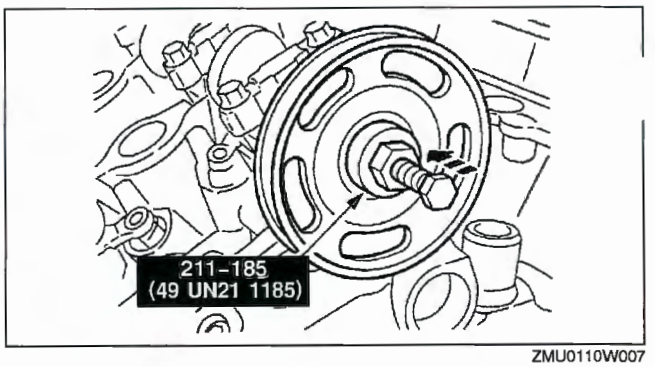

ZMU0110W007

CYLINDER HEAD GASKET REPLACEMENT [AJ]

E6U011010271W01

Warning

- **Fuel vapor is hazardous. It can very easily ignite, causing serious injury and damage. Always keep sparks and flames away from fuel.**
- **Fuel line spills and leakage are dangerous. Fuel can ignite and cause serious injuries or death and damage. Fuel can also irritate skin and eyes. To prevent this, always complete the "Fuel Line Safety Procedure". (See 01–14A–6 Fuel Line Safety Procedure.)**

1. Drain the engine coolant. (See 01–12A–3 COOLING SYSTEM SERVICE WARNINGS [L3, AJ].)
2. Remove the water pump. (See 01–12A–10 WATER PUMP REMOVAL/INSTALLATION [L3, AJ].)
3. Remove the timing chain. (See 01–10C–6 TIMING CHAIN REMOVAL/INSTALLATION [AJ].)
4. Install the oil pan. (See 01–11A–8 OIL PAN REMOVAL/INSTALLATION [L3, AJ].)
5. Secure the engine and the transaxle using an engine jack and attachment as shown.
6. Remove in the order indicated in the table.

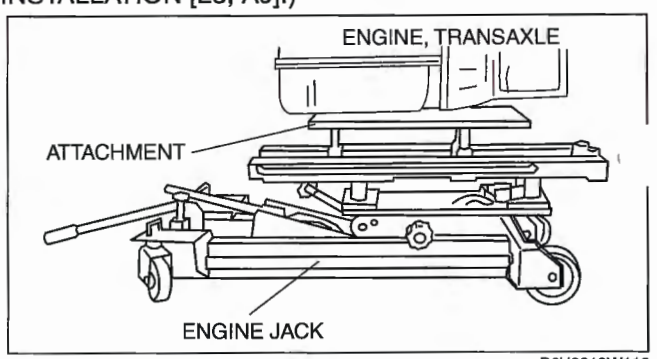

B6U2218W110

7. Install in the reverse order of removal.

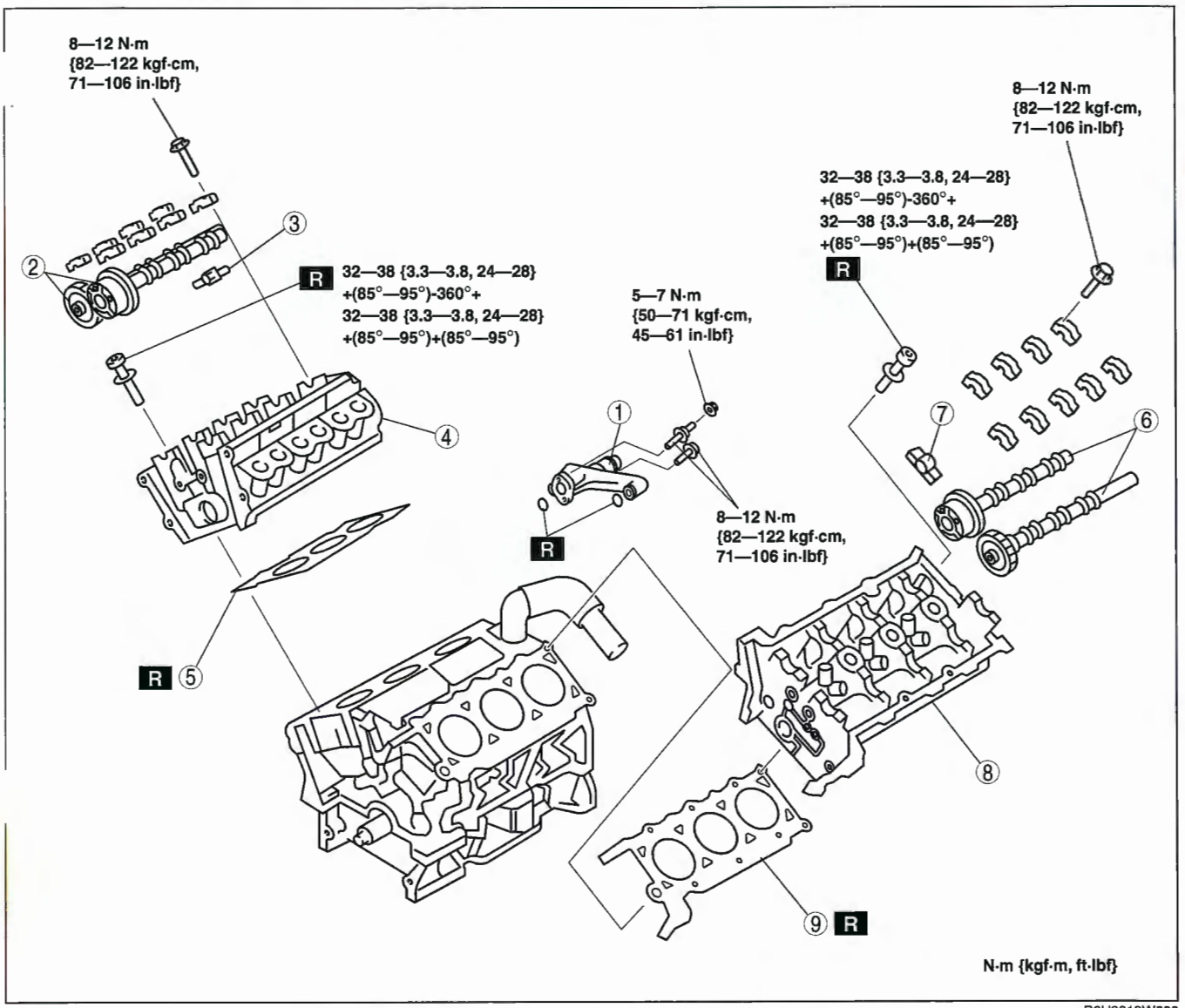

B6U2218W003

1	Water bypass tube (See 01–10C–26 Water Bypass Tube Removal Note)
2	Camshaft (RH) (See 01–10C–26 Camshaft (RH) Removal Note) (See 01–10C–28 Camshaft (RH) Installation Note)
3	Rocker arm (RH)
4	Cylinder head (RH) (See 01–10C–27 Cylinder Head (RH) Removal Note) (See 01–10C–28 Cylinder Head (RH) Installation Note)
5	Cylinder head gasket (RH)

6	Camshaft (LH) (See 01–10C–27 Camshaft (LH) Removal Note) (See 01–10C–28 Camshaft (LH) Installation Note)
7	Rocker arm (LH)
8	Cylinder head (LH) (See 01–10C–28 Cylinder Head (LH) Removal Note) (See 01–10C–28 Cylinder Head (LH) Installation Note)
9	Cylinder head gasket (LH)

Water Bypass Tube Removal Note

1. Remove the water bypass tube installation stud bolt and bolt, and disconnect the water bypass tube from the cylinder head.

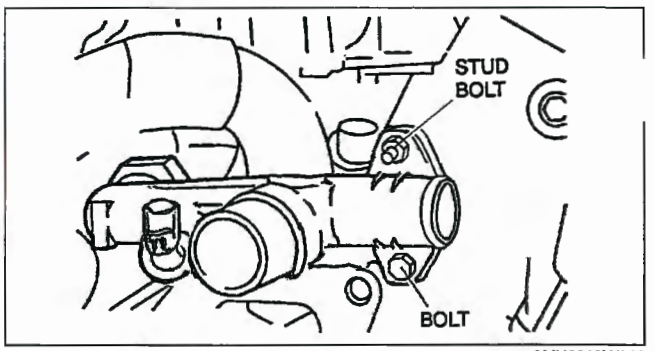

AMU2218W002

Camshaft (RH) Removal Note

Caution

- **Remove the camshaft bearing thrust caps No. 1R and 5R first. Do not loosen any of the other bolts until the thrust caps are removed, or damage to the thrust caps may occur.**

Note

- Cylinder head and the camshaft bearing caps are numbered to make sure they are assembled in their original position. When removed, keep the bearing caps with the cylinder head from where they were removed together. Do not mix the caps.

1. Loosen bolts in several passes.

Note

- Do not remove bolts completely.

2. Remove the RH camshaft thrust caps 1R and 5R.

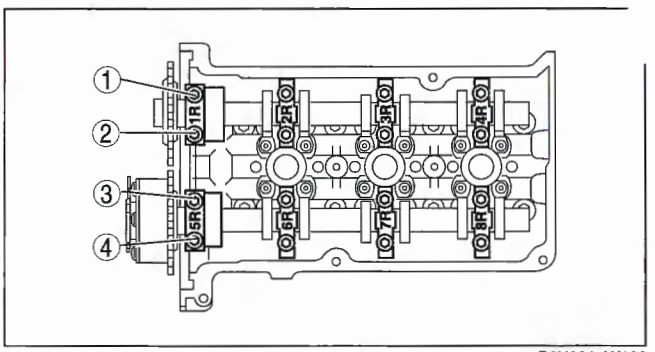

B6U2215W103

3. Loosen the remaining bolts 7–8 turns in the indicated sequence in several passes to allow the camshafts (RH) to be slowly raised.

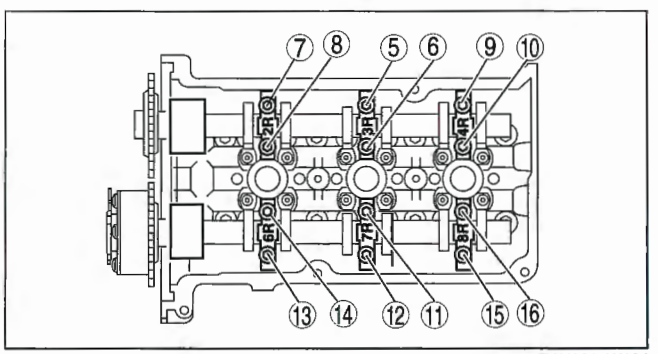

B6U2215W104

Cylinder Head (RH) Removal Note

1. Loosen the cylinder head bolts in several passes in the order shown.

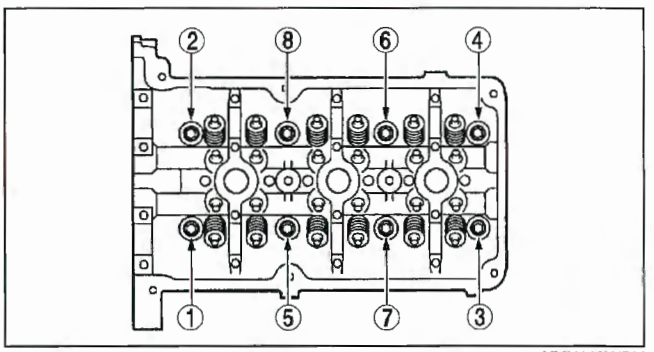

YMU110WBM

Camshaft (LH) Removal Note

Caution

- **Remove the camshaft bearing thrust caps No. 1L and 6L first. Do not loosen any of the other bolts until the thrust caps are removed, or damage to the thrust caps may occur.**

Note

- Cylinder head and the camshaft bearing caps are numbered to make sure they are assembled in their original position. When removed, keep the bearing caps with the cylinder head from where they were removed together. Do not mix the caps.

1. Loosen bolts in several passes.

Note

- Do not remove bolts completely.

Remove the camshaft (LH) thrust caps 1L and 6L.

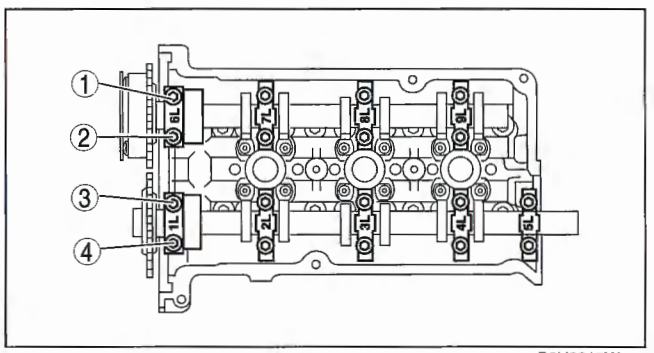

B6U2215W105

3. Loosen the remaining bolts 7—8 turns in the indicated sequence to allow the camshaft (LH) to rise.

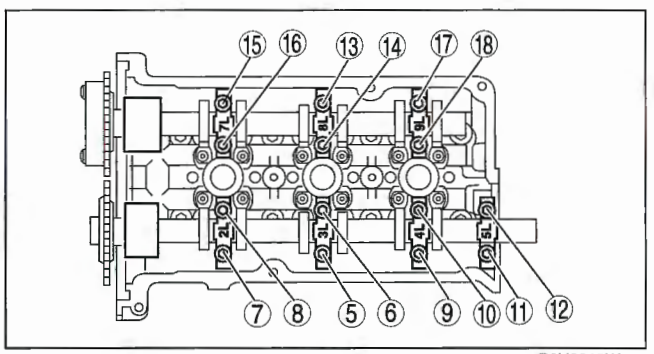

B6U2215W106

Cylinder Head (LH) Removal Note

1. Loosen the cylinder head bolts in several passes in the order shown.

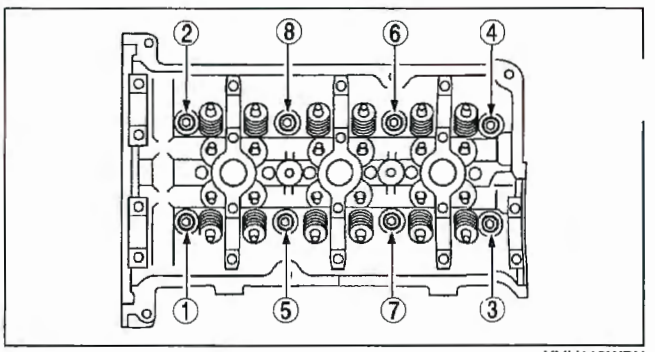

YMU110WBN

Cylinder Head (LH) Installation Note

1. Tighten the cylinder head bolts in the order shown using the following 6 steps.
   (1) Tighten to **32—38 N·m {3.3—3.8 kgf·m, 24—28 ft·lbf}**.
   (2) Tighten **85°—95°**.
   (3) Loosen **360°** (one full turn) in reverse order.
   (4) Tighten to **32—38 N·m {3.3—3.8 kgf·m, 24—28 ft·lbf}**.
   (5) Tighten **85°—95°**.
   (6) Tighten **85°—95°**.

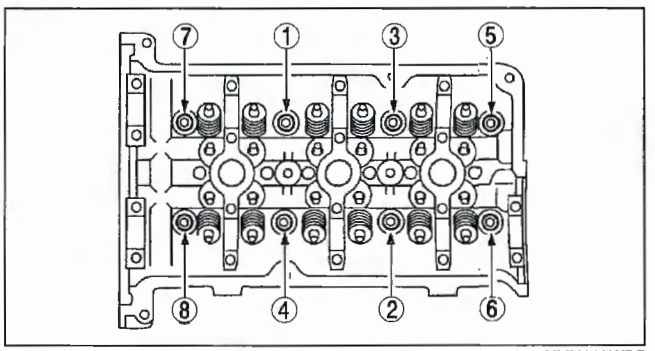

YMU110WBP

Camshaft (LH) Installation Note

1. Install the camshaft (LH) referring to Timing Chain Component (LH) Installation Note in TIMING CHAIN REMOVAL/INSTALLATION. (See 01–10C–16 Timing Chain Component (LH) Installation Note.)

Cylinder Head (RH) Installation Note

1. Tighten the cylinder head bolts in the order shown using the following 6 steps.
   (1) Tighten to **32—38 N·m {3.3—3.8 kgf·m, 24—28 ft·lbf}**.
   (2) Tighten **85°—95°**.
   (3) Loosen **360°** (one full turn) in reverse order.
   (4) Tighten to **32—38 N·m {3.3—3.8 kgf·m, 24—28 ft·lbf}**.
   (5) Tighten **85°—95°**.
   (6) Tighten **85°—95°**.

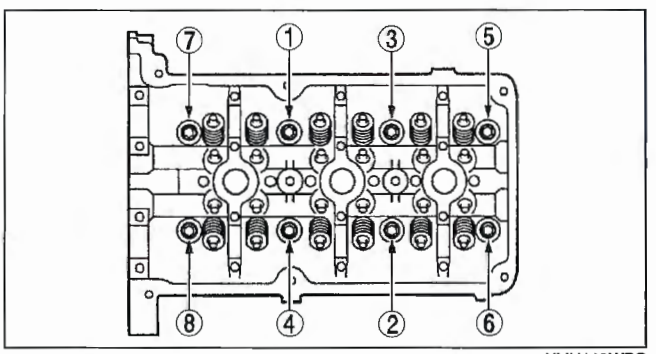

YMU110WBQ

Camshaft (RH) Installation Note

1. Install the camshaft (RH) referring to Timing Chain Component (RH) Installation Note in TIMING CHAIN REMOVAL/INSTALLATION. (See 01–10C–18 Timing Chain Component (RH) Installation Note.)

HYDRAULIC LASH ADJUSTER (HLA) REMOVAL/INSTALLATION [AJ]

E6U011012100W01

1. Remove the timing chain. (See 01–10C–6 TIMING CHAIN REMOVAL/INSTALLATION [AJ].)
2. Remove in the order indicated in the table.
   Install in the reverse order of removal.

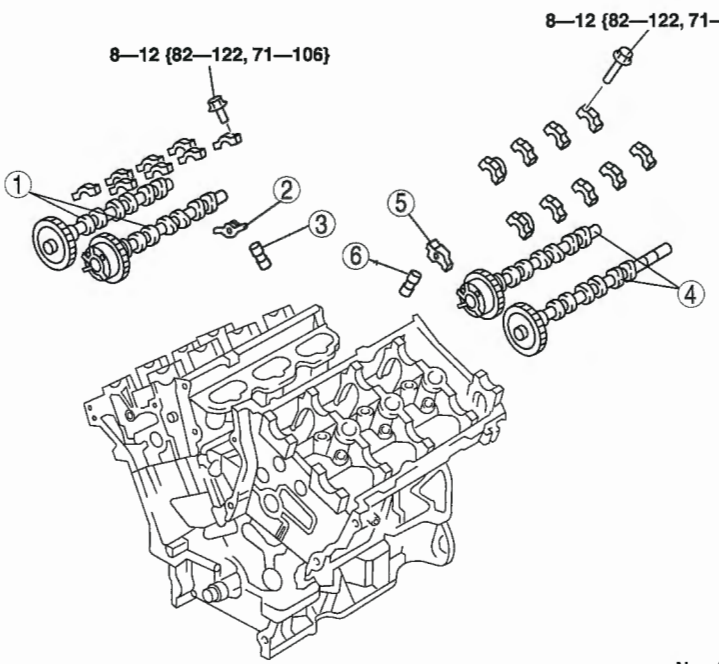

B6U2224W215

1	Camshaft (RH) (See 01–10C–29 Camshaft (RH) Removal Note) (See 01–10C–31 Camshaft (RH) Installation Note)
2	Rocker arm (RH) (See 01–10C–30 Rocker Arm (RH) Removal Note)
3	HLA (RH)

4	Camshaft (LH) (See 01–10C–30 Camshaft (LH) Removal Note) (See 01–10C–31 Camshaft (LH) Installation Note)
5	Rocker arm (LH) (See 01–10C–31 Rocker Arm (LH) Removal Note)
6	HLA (LH)

Camshaft (RH) Removal Note

Caution

- **Remove the camshaft bearing thrust caps No. 1R and 5R first. Do not loosen any of the other bolts until the thrust caps are removed, or damage to the thrust caps may occur.**

Note

- Cylinder head and the camshaft bearing caps are numbered to make sure they are assembled in their original position. When removed, keep the bearing caps with the cylinder head from where they were removed together. Do not mix the caps.

1. Loosen bolts in several passes.

Note

- Do not remove bolts completely.

2. Remove the RH camshaft thrust caps 1R and 5R.

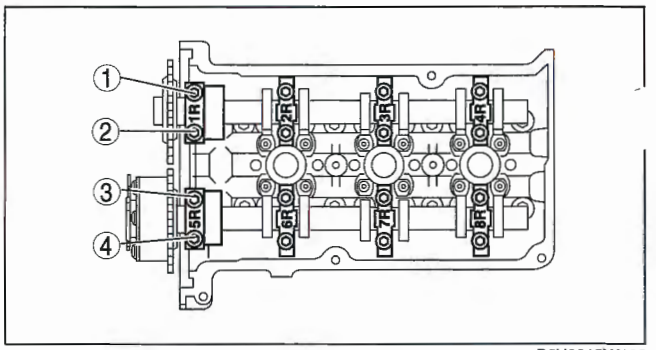

B6U2215W103

3. Loosen the remaining bolts 7–8 turns in the indicated sequence in several passes to allow the camshafts (RH) to be slowly raised.

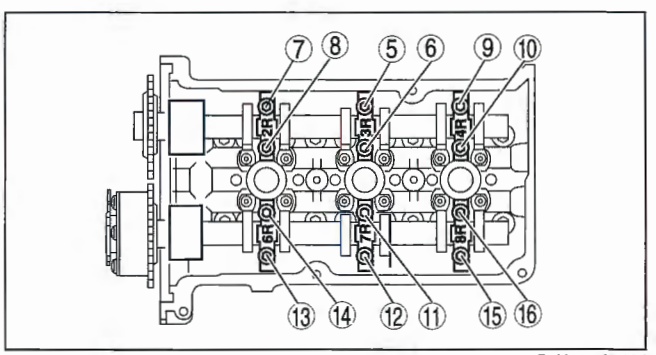

B6U2215W104

Rocker Arm (RH) Removal Note

Note
- If the rocker arm and HLA are to be reused, mark their positions to make sure they are assembled in the original location.
- Take care not to let the rocker arm slip into the timing chain cover when removing the rocker arm from engine front.

Camshaft (LH) Removal Note

Caution
- **Remove the camshaft bearing thrust caps No. 1L and 6L first. Do not loosen any of the other bolts until the thrust caps are removed, or damage to the thrust caps may occur.**

Note
- Cylinder head and the camshaft bearing caps are numbered to make sure they are assembled in their original position. When removed, keep the bearing caps with the cylinder head from where they were removed together. Do not mix the caps.

1. Loosen bolts in several passes.

Note
- Do not remove bolts completely.

2. Remove the camshaft (LH) thrust caps 1L and 6L.

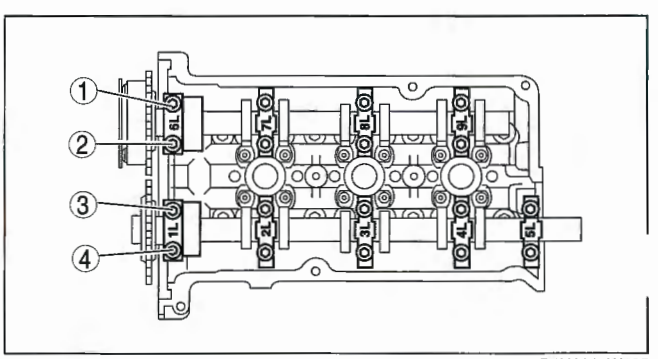

B6U2215W105

3. Loosen the remaining bolts 7—8 turns in the indicated sequence to allow the camshaft (LH) to rise.

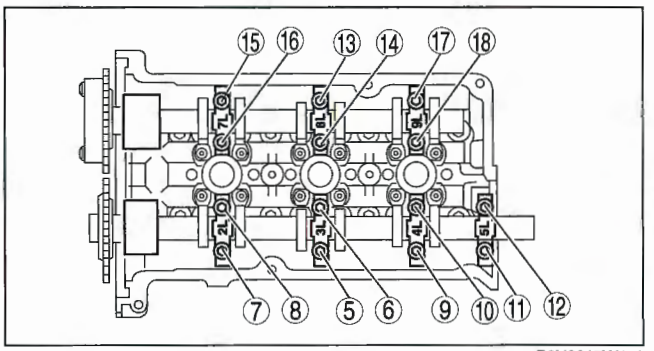

B6U2215W106

Rocker Arm (LH) Removal Note

Note
- If the rocker arm and HLA are to be reused, mark their positions to make sure they are assembled in the original location.
- Take care not to let the rocker arm slip into the timing chain cover when removing the rocker arm from engine front.

Camshaft (LH) Installation Note
1. Install the camshaft (LH) referring to Timing Chain Component (LH) Installation Note in TIMING CHAIN REMOVAL/INSTALLATION. (See 01–10C–16 Timing Chain Component (LH) Installation Note.)

Camshaft (RH) Installation Note
1. Install the camshaft (RH) referring to Timing Chain Component (RH) Installation Note in TIMING CHAIN REMOVAL/INSTALLATION. (See 01–10C–18 Timing Chain Component (RH) Installation Note.)

FRONT OIL SEAL REPLACEMENT [AJ]

E6U011010602W01

1. Disconnect the negative battery cable.
2. Remove the drive belt. (See 01–10C–4 DRIVE BELT REPLACEMENT [AJ].)
3. Remove in the order indicated in the table.
4. Install in the reverse order of removal.

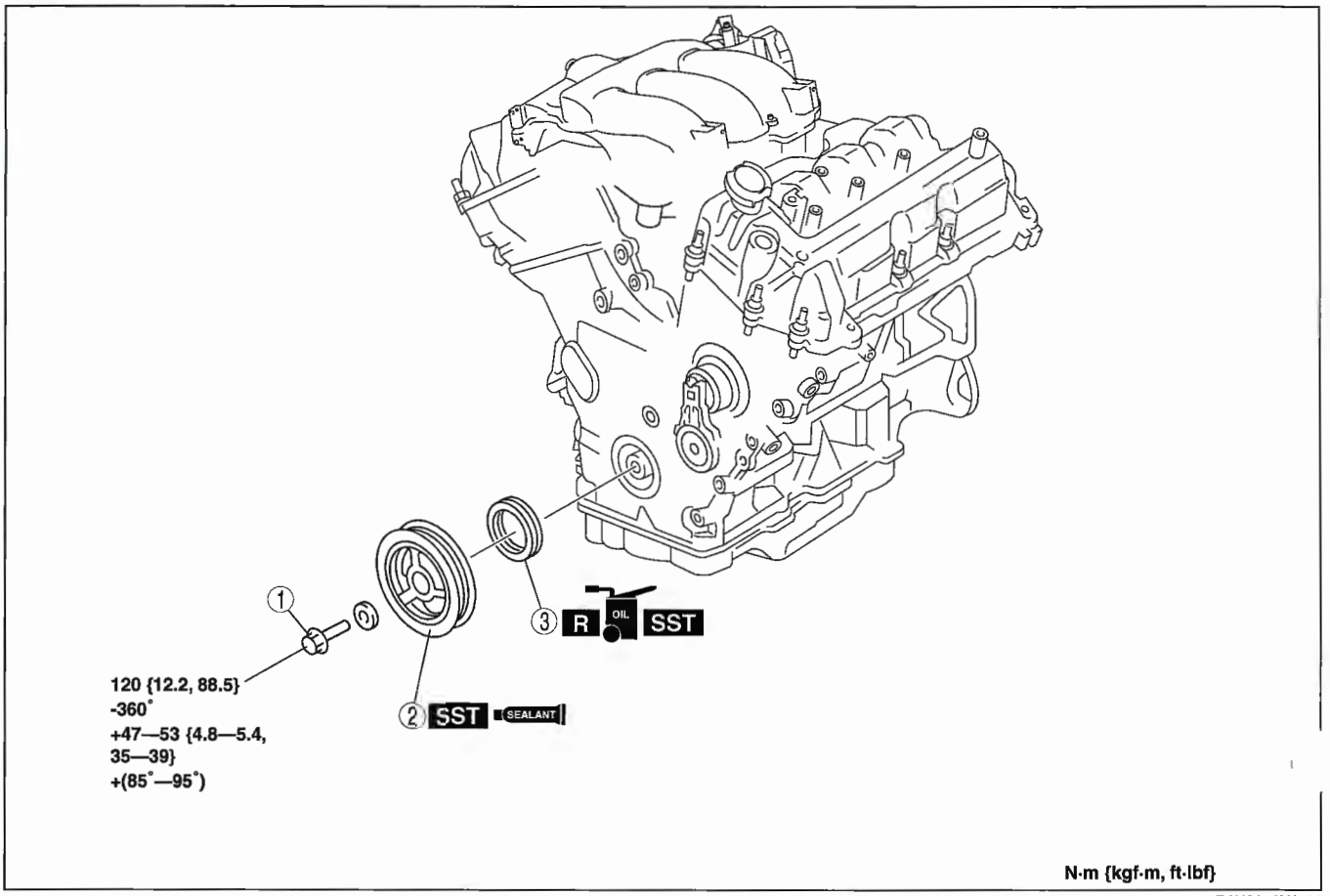

B6U2220W001

1	Crankshaft pulley lock bolt (See 01–10C–32 Crankshaft Pulley Lock Bolt Removal Note) (See 01–10C–34 Crankshaft Pulley Lock Bolt Installation Note)

2	Crankshaft pulley
3	Front oil seal (See 01–10C–33 Front Oil Seal Removal Note) (See 01–10C–33 Front Oil Seal Installation Note)

Crankshaft Pulley Lock Bolt Removal Note

1. Hold the crankshaft pulley using the **SSTs**.

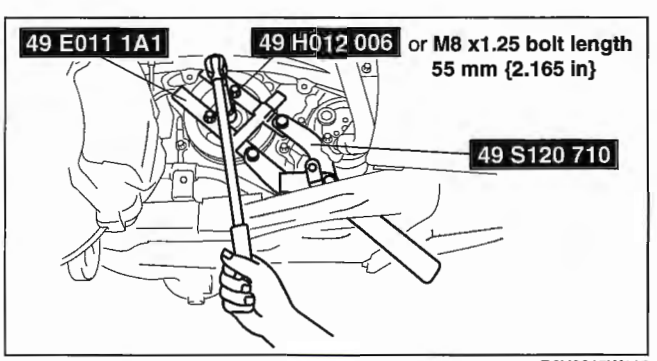

B6U2215W115

Crankshaft Pulley Removal Note

1. Remove the A/C compressor with the pipes still connected.
2. Remove the crankshaft pulley using the **SST**.

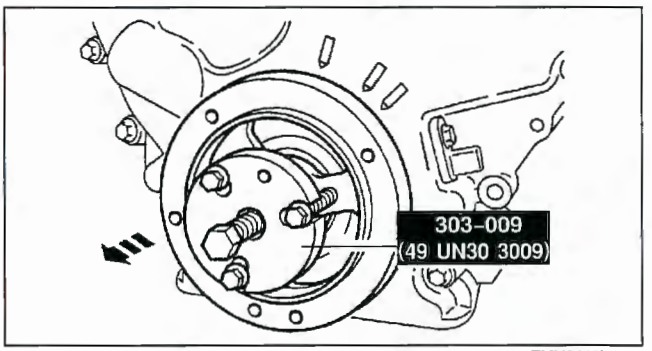

ZMU0110W003

Front Oil Seal Removal Note

1. Remove the front oil seal using a screwdriver as shown.

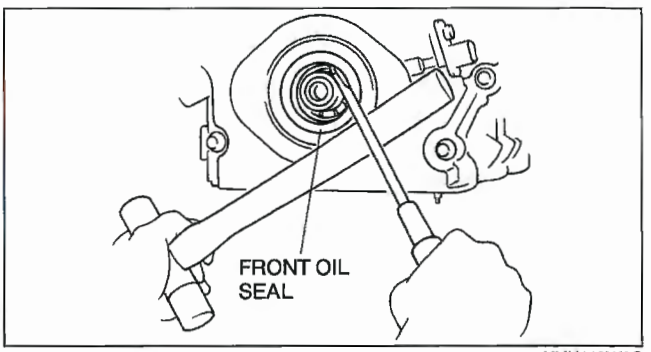

YMU110WAG

ɔnt Oil Seal Installation Note

. Assemble the front oil seal using part A of the **SST** [303-335 (49 UN30 3335)] and the **SST** [303-102 (49 UN01 002)].
2. Apply clean engine oil to the oil seal.
3. Push the oil seal slightly in by hand.

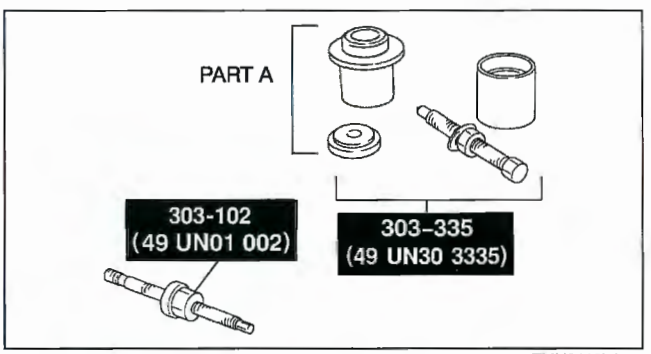

ZMU0110W004

4. Compress the oil seal using the **SSTs**.

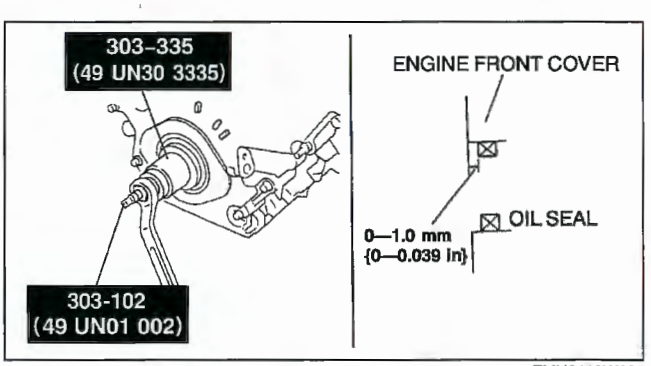

ZMU0110W005

Crankshaft Pulley Installation Note

1. Seal the keyway in the crankshaft pulley using silicone sealant.
2. Install the crankshaft pulley using the **SST** and the crankshaft pulley lock bolt washer.

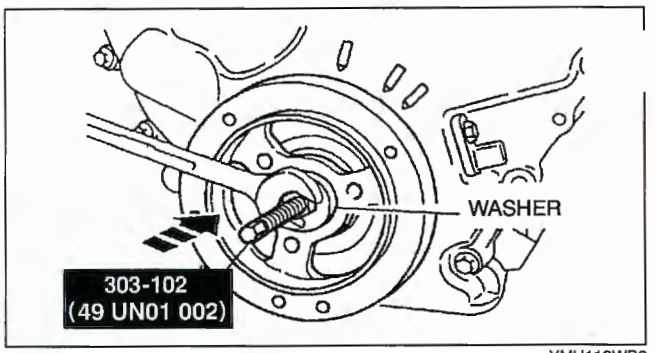

YMU110WB9

Crankshaft Pulley Lock Bolt Installation Note

1. Hold the crankshaft pulley using the **SSTs**.
2. Tighten the new crankshaft pulley lock bolt in four steps.
   (1) Tighten to **120 N·m {12.2 kgf·m, 88.5 ft·lbf}**.
   (2) Loosen **360°** (one full turn) in reverse order.
   (3) Tighten to **47—53 N·m {4.8—5.4 kgf·m, 35—39 ft·lbf}**.
   (4) Tighten **85°—95°**.
3. Install the A/C compressor.

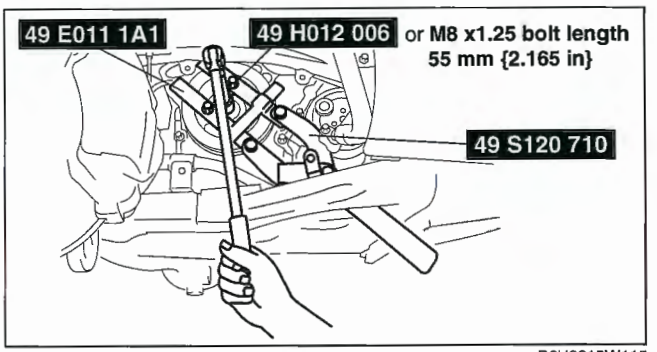

B6U2215W115

REAR OIL SEAL REPLACEMENT [AJ]

E6U011011399W01

1. Remove the flywheel. (MTX) (See 05–10–19 CLUTCH UNIT REMOVAL/INSTALLATION [G35M-R, A65M-R].)
2. Remove the drive plate. (ATX) (See 05–17B–54 DRIVE PLATE REMOVAL/INSTALLATION [AW6A-EL].)
3. Cut the oil seal lip using a razor knife.
4. Remove the rear oil seal using a screwdriver as shown.

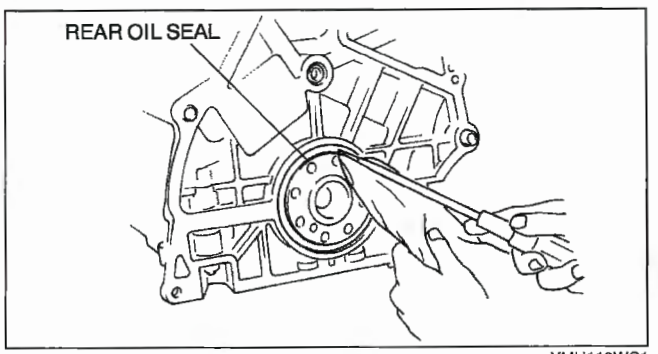

YMU110WC1

5. Install the rear oil seal with part A of the **SST** [303-178 (49 UN01 070)] and the **SST** [303-384 (49 UN30 3384)].

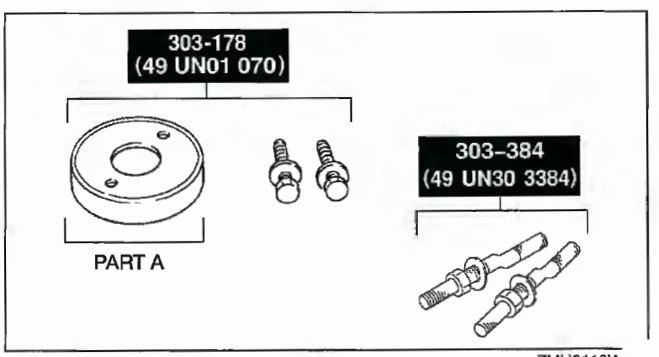

ZMU0110W

6. Install the studs of the **SST** [303-384 (49 UN30 3384)] as indicated in the figure.
7. Apply clean engine oil to the new oil seal. Push the oil seal slightly in by hand.

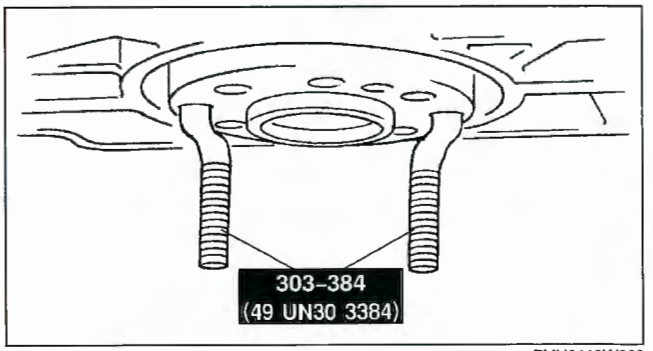

ZMU0110W009

9. Install part A of the **SST** [303-178 (49 UN01 070)] and compress the oil seal with the nuts of the **SST** [303-384 (49 UN30 3384)].
10. Install the drive plate. (ATX) (See 05–17B–54 DRIVE PLATE REMOVAL/INSTALLATION [AW6A-EL].)
11. Install the flywheel. (MTX) (See 05–10–19 CLUTCH UNIT REMOVAL/INSTALLATION [G35M-R, A65M-R].)

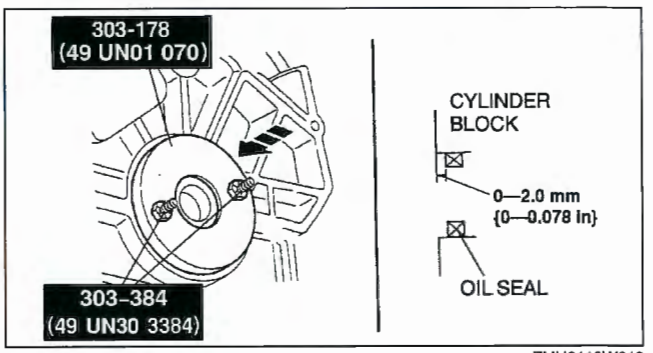

ZMU0110W010

ENGINE REMOVAL/INSTALLATION [AJ]

E6U011002000W03

Warning

- **Fuel vapor is hazardous. It can very easily ignite, causing serious injury and damage. Always keep sparks and flames away from fuel.**
- **Fuel line spills and leakage are dangerous. Fuel can ignite and cause serious injuries or death and damage. Fuel can also irritate skin and eyes. To prevent this, always complete the "Fuel Line Safety Procedure". (See 01–14A–6 Fuel Line Safety Procedure.)**

1. Remove the under cover.
2. Drain the engine coolant. (See 01–12A–3 COOLING SYSTEM SERVICE WARNINGS [L3, AJ].)
3. Drain the ATF (ATX). (See 05–17B–12 AUTOMATIC TRANSAXLE FLUID (ATF) REPLACEMENT [AW6A-EL].) (See 05–17A–12 AUTOMATIC TRANSAXLE FLUID (ATF) REPLACEMENT [FS5A-EL].)
4. Remove the plug hole plate. (See 01–10C–6 TIMING CHAIN REMOVAL/INSTALLATION [AJ].)
5. Remove the battery and battery tray. (See 01–17A–1 BATTERY REMOVAL/INSTALLATION [L3, AJ].)
6. Remove the air cleaner, intake air duct and vacuum hose. (See 01–13C–2 INTAKE AIR SYSTEM REMOVAL/INSTALLATION [AJ].)
7. Disconnect the ATF hose and selector cable (ATX). (See 05–17B–30 AUTOMATIC TRANSAXLE REMOVAL/INSTALLATION [AW6A-EL].)
8. Disconnect the shift cable, selector cable and clutch release cylinder (MTX). (See 05–15B–5 MANUAL TRANSAXLE REMOVAL/INSTALLATION [A65M-R].)
9. Disconnect the plastic fuel hose. (See 01–14A–28 Plastic Fuel Hose Removal Note.) (See 01–14A–29 Plastic Fuel Hose Installation Note.)
10. Disconnect the engine and PCM wiring harness
11. Remove the joint shaft (RH). (See 03–13–5 JOINT SHAFT REMOVAL/INSTALLATION [AJ].)
12. Disconnect the drive shaft (LH) from the transaxle. (See 03–13–19 FRONT DRIVE SHAFT REMOVAL/INSTALLATION [AJ].)
13. Remove the front crossmember. (See 02–13–20 FRONT CROSSMEMBER REMOVAL/INSTALLATION.)
14. Remove the front drive belt. (See 01–10C–4 DRIVE BELT REPLACEMENT [AJ].)
15. Remove the oil level gauge pipe. (See 01–10C–6 TIMING CHAIN REMOVAL/INSTALLATION [AJ].)
16. Disconnect the P/S oil pump pipes and drain the P/S fluid reservoir. (See 06–12–32 POWER STEERING OIL PUMP DISASSEMBLY/ASSEMBLY [AJ].)
17. Remove the A/C compressor. (See 07–11–15 A/C COMPRESSOR REMOVAL/INSTALLATION [L3, AJ].)
    Remove the TWC (LH) (See 01–15C–2 EXHAUST SYSTEM REMOVAL/INSTALLATION [AJ].)
19. Remove the front pipe. (See 01–15C–2 EXHAUST SYSTEM REMOVAL/INSTALLATION [AJ].)
20. Disconnect the radiator hose and heater hose.
21. Remove in the order indicated in the table.
22. Install in the reverse order of removal.

23. Start the engine and:
    (1) Inspect for the engine oil, engine coolant, transaxle oil and fuel leakage.
    (2) Verify the ignition timing, idle speed and idle mixture. (See 01–10C–39 Ignition Timing Inspection.) (See 01–10C–39 Idle Speed Inspection.) (See 01–10C–40 Idle Mixture Inspection.)

Note
- If the engine is overhauled and installed to the vehicle, perform the road test and verify that there is no abnormality.

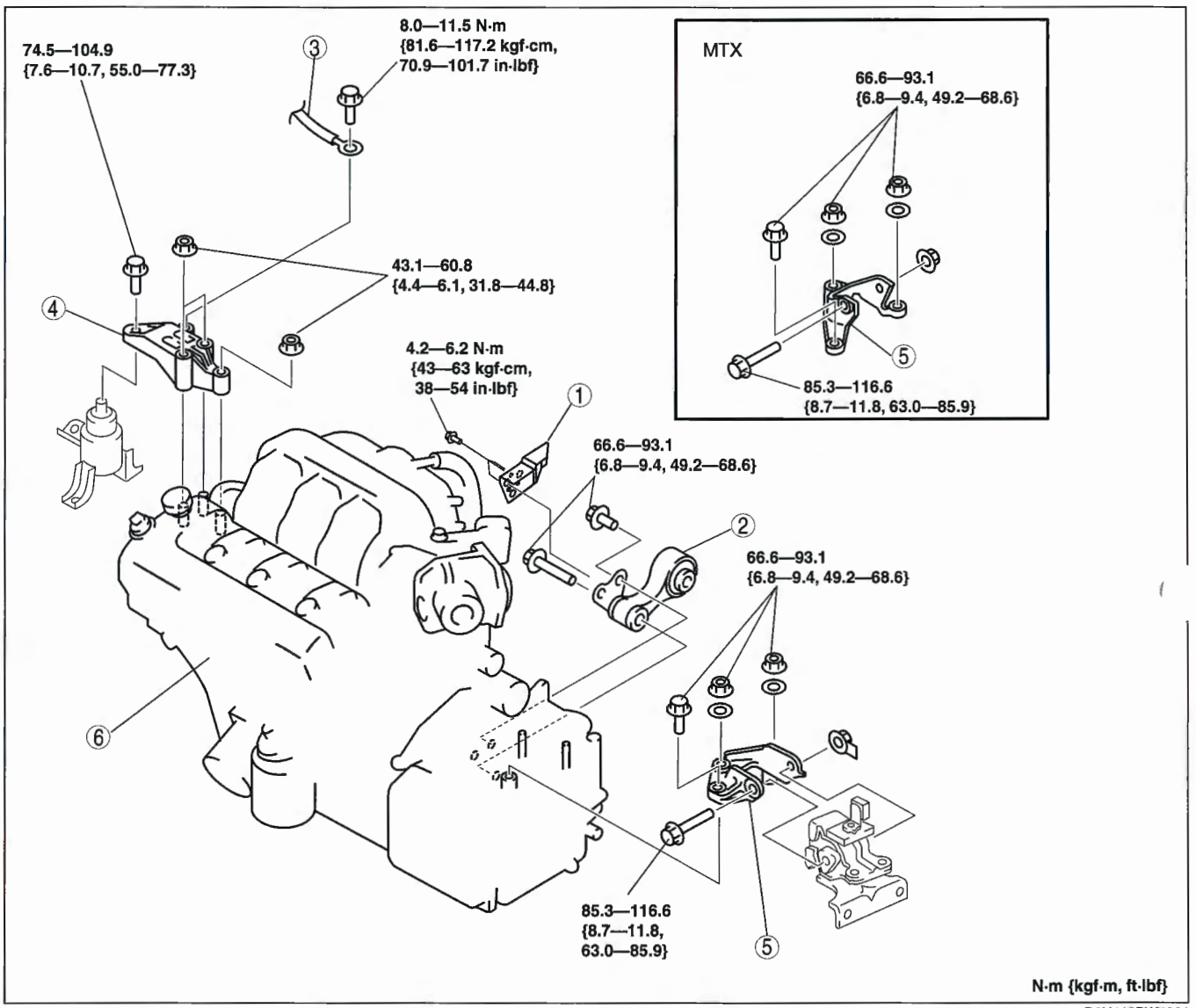

D6U110BW7001

1	No.1 engine mount insulator [AW6A-EL] (See 01–10C–37 No.1 Engine Mount and Insulator Installation Note.)
2	No.1 engine mount rubber
3	Engine ground
4	No.3 engine joint bracket (See 01–10C–37 No.3 Engine Joint Bracket and No.4 Engine Mount Bracket Removal Note) (See 01–10C–37 No.3 Engine Joint Bracket Installation Note)

5	No.4 engine mount bracket (See 01–10C–37 No.3 Engine Joint Bracket and No.4 Engine Mount Bracket Removal Note) (See 01–10C–38 No.4 Engine Mount Bracket Installation Note)
6	Engine, transaxle

No.1 Engine Mount and Insulator Installation Note

1. Align the hole of the No.1 engine mount rubber with the bolt hole of the transaxle.
2. Temporarily tighten bolt A, then tighten bolts B, C.
   Tighten bolt A.

   Tightening torque
   A, B, C: 66.6—93.1 N·m {6.8—9.4 kgf·m, 49.2—68.6 ft·lbf}

4. Align the hole of the insulator with the bolt hole of the No.1 engine mount rubber.
5. Temporarily tighten bolt D.
6. Tighten bolt E and F in the order of E→F.

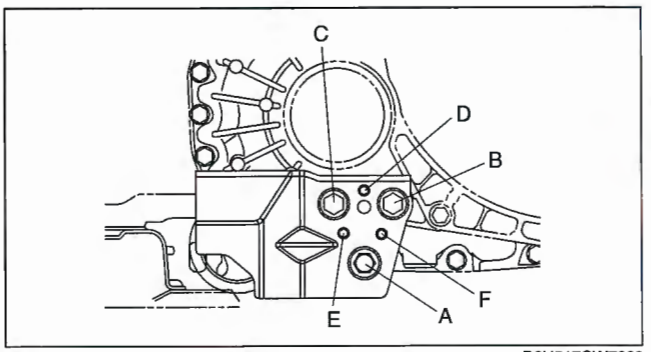

D6U517CW7038

7. Tighten bolt D.

   Tightening torque
   D, E, F: 4.2—6.2 N·m {43—63 kgf·cm, 38—54 in·lbf}

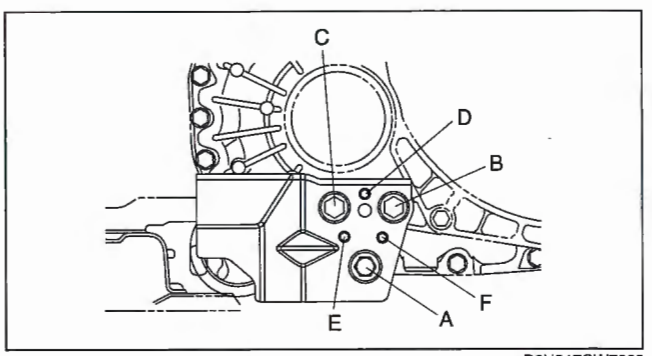

D6U517CW7038

No.3 Engine Joint Bracket and No.4 Engine Mount Bracket Removal Note

Secure the engine and the transaxle using an engine jack and attachment as shown.

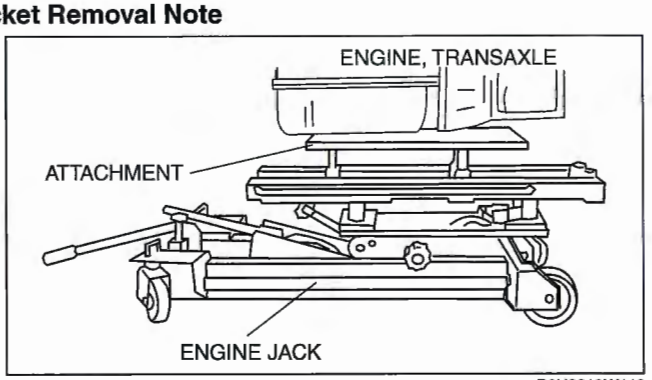

B6U2218W110

No.3 Engine Joint Bracket Installation Note

1. Secure the engine and the transaxle using an engine jack and attachment as shown.

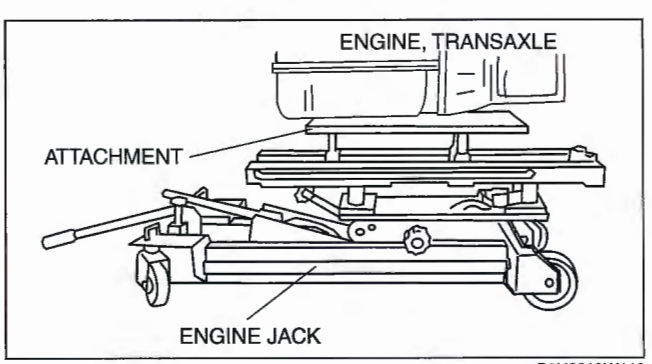

B6U2218W110

2. Tighten the No.3 engine joint bracket bolts and nuts in the order shown.

Bolt and nut No.	Tightening torque (N·m {kgf·m, ft·lbf})
1	74.5—104.9 {7.6—10.7, 55.0—77.3}
2, 3, 4	43.1—60.8 {4.4—6.1, 31.8—44.8}

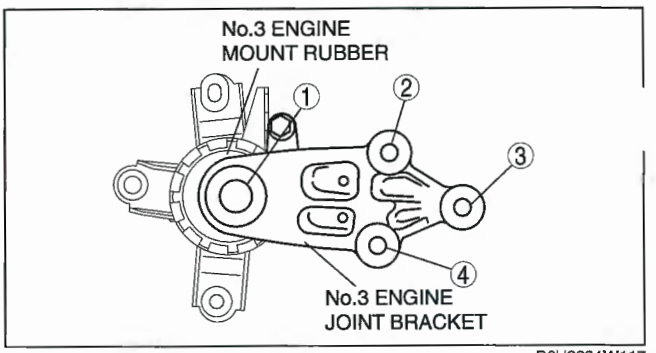

B6U2224W117

No.4 Engine Mount Bracket Installation Note

1. Secure the engine and the transaxle using an engine jack and attachment as shown.

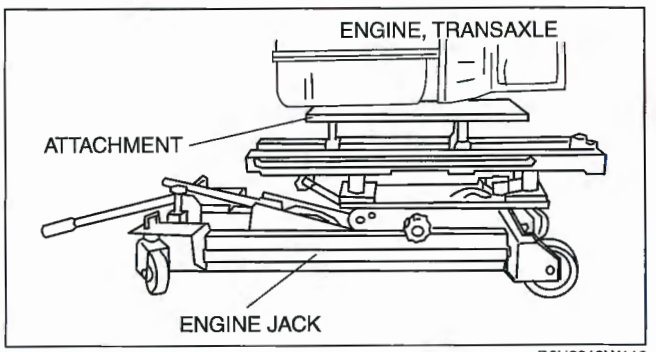

B6U2218W110

2. Tighten the No.4 engine joint bracket bolts and nuts in the order shown.

Bolt and nut No.	Tightening torque (N·m {kgf·m, ft·lbf})
1, 2, 3	66.6—93.1 {6.8—9.4, 49.2—68.6}
4	85.3—116.6 {8.7—11.8, 63.0—85.9}

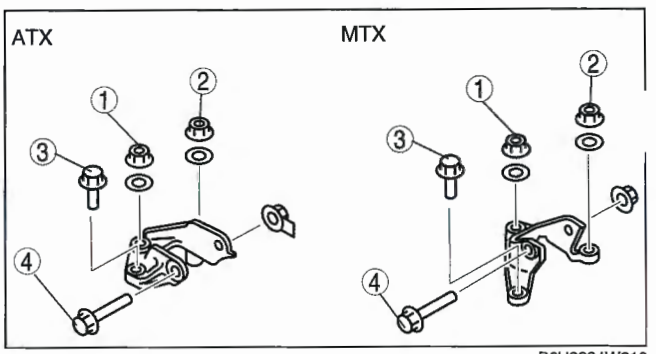

B6U2224W218

ENGINE DISASSEMBLY/ASSEMBLY [AJ]

E6U011002000W04

1. Using the bolts **part number 99794 1025** or **M10×1.25, length 25 mm {0.984 in}** to Install the **SST** as shown.

   Tightening torque
   100—125 N·m {10.2—12.7 kgf·m, 73.8—92.1 ft·lbf}

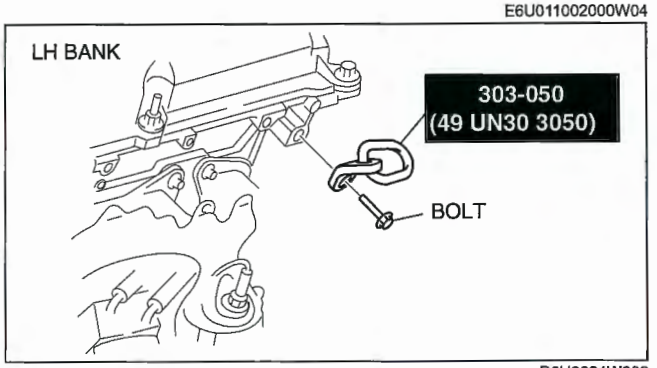

B6U2324W002

2. Remove the engine and transaxle from the engine jack.
3. Disconnect the engine and transaxle. (See 05–17B–30 AUTOMATIC TRANSAXLE REMOVAL/INSTALLATION [AW6A-EL].)
4. Remove the generator. (See 01–17A–4 GENERATOR REMOVAL/INSTALLATION [L3, AJ].)
5. Remove the P/S oil pump. (See 06–12–32 POWER STEERING OIL PUMP DISASSEMBLY/ASSEMBLY [AJ
6. Remove the intake-air system. (See 01–13C–2 INTAKE AIR SYSTEM REMOVAL/INSTALLATION [AJ].)
7. Remove the exhaust system. (See 01–15C–2 EXHAUST SYSTEM REMOVAL/INSTALLATION [AJ].)

8. Remove the thermostat case and water hose component.
9. Remove the water bypass tube. (See 01–10C–26 Water Bypass Tube Removal Note.)
10. Remove the Ignition coils. (See 01–18A–2 IGNITION COIL REMOVAL/INSTALLATION [L3, AJ].)
11. Assemble in the reverse order of disassembly.

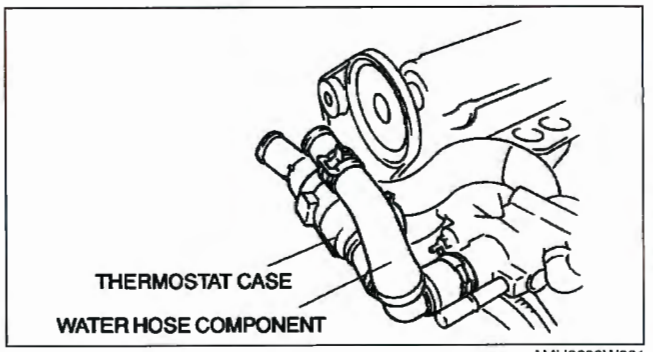

AMU3630W001

ENGINE TUNE-UP [AJ]

E6U011002000W05

Engine Tune-up Preparation

1. Turn off the electrical loads.
2. Warm up the engine as follows.
   (1) Start the engine.
   (2) Maintain the engine speed **2,500—3,000 rpm** until the cooling fans start to operate.
   (3) Release the accelerator pedal.
   (4) Wait until the cooling fans stop.
3. Connect the **SST** (WDS or equivalent) to the DLC-2.

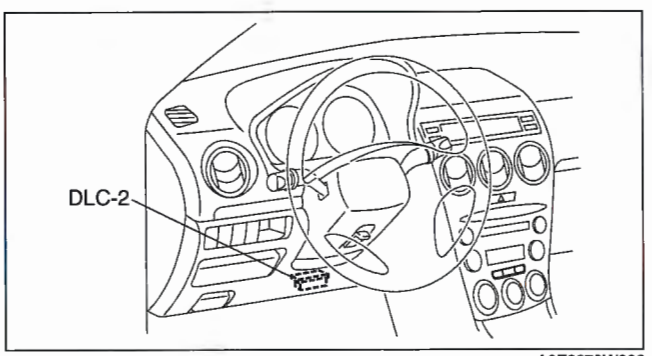

A6E3970W002

Ignition Timing Inspection

Note
- Ignition timing is not adjustable.
- Ignition timing verification requires WDS or equivalent.

1. Verify that the ignition timing (WDS: SPARKADV PID) is within the specification using WDS or equivalent.

Ignition timing
Approx. BTDC 10°

2. Verify that ignition timing advances when the engine speed increases gradually.

Idle Speed Inspection

Note
- Idle speed is not adjustable.
- Idle speed verification requires WDS or equivalent.

1. Verify that the idle speed (WDS: RPM PID) is within the specification using WDS or equivalent.

Standard

Condition	Engine speed (rpm)*1 N,D position (ATX), Neutral position (MTX)		
	ATX		MTX
	N range	D range	
No load	650—750	600—700	700—800
Electrical loads*2 ON	700—800	600—700	700—800
PS ON	700—800	700—800	700—800
AC ON	700—800	700—800	700—800

*1 : Excludes temporary idle speed drop just after the electrical loads are turned on.
*2 : Blower motor is operating at high speed. Headlight switch is turned on. Rear window defroster switch is turned on. Cooling fans are operating.

Idle Mixture Inspection

1. Verify that the idle speed and ignition timing are within the specification. (See 01–10C–39 Idle Speed Inspection.) (See 01–10C–39 Ignition Timing Inspection.)
2. Insert an exhaust gas analyzer to the tailpipe.
3. Verify that the CO and HC concentrations are within the regulation.

VARIABLE VALVE TIMING ACTUATOR INSPECTION [AJ]

E6U011012490W01

Caution

- **The variable valve timing actuator cannot be disassembled because it is a precision unit.**

1. Remove the cylinder head cover.(See 01–10C–6 TIMING CHAIN REMOVAL/INSTALLATION [AJ].)
2. Confirm that the key groove on the rotor and the timing mark on the sprocket of the variable valve timing actuator are aligned and fitted.
   - If the key groove and the timing mark are not aligned, rotate the crankshaft clockwise one rotation and then counterclockwise one rotation. Verify that the key groove and the timing mark are aligned.
   - If the key groove and timing mark are still not aligned, replace the variable valve timing actuator.
   - If, when rotating the crankshaft, there is a hitting noise from the variable valve timing actuator each time the cam passes the fully lifted position, it means that the actuator is not secured. Replace the actuator.

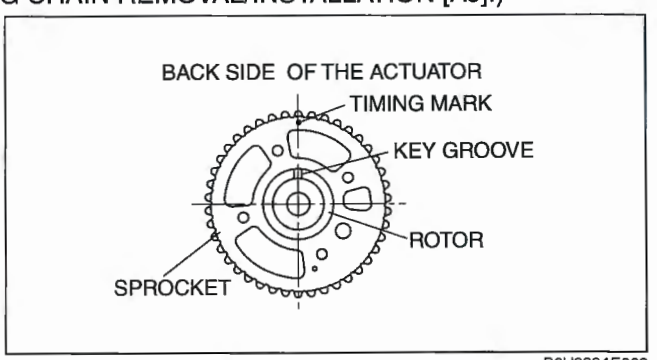

B6U2224E002

3. Install the cylinder head cover. (See 01–10C–6 TIMING CHAIN REMOVAL/INSTALLATION [AJ].)

VARIABLE VALVE TIMING ACTUATOR REMOVAL/INSTALLATION [AJ]

E6U011012490W02

Caution

- **The variable valve timing actuator cannot be disassembled because it is a precision unit.**

Note

- The camshaft sprocket is integrated with the variable valve timing actuator and cannot be disassembled.

1. Remove the camshaft component. (See 01–10C–29 HYDRAULIC LASH ADJUSTER (HLA) REMOVAL/ INSTALLATION [AJ].)
2. Secure the camshaft sprocket in a vise using the **SST**.
3. Loosen the variable valve timing actuator tightening bolt.
4. Remove the variable valve timing actuator.
5. Install the variable valve timing actuator using a new tightening bolt.

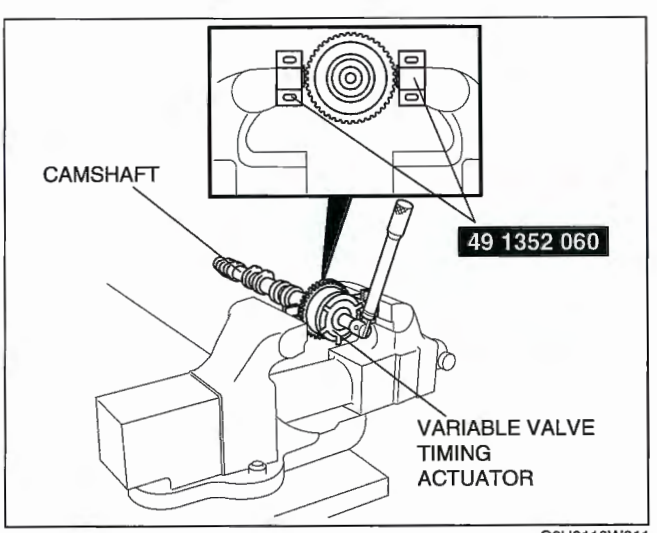

C6U0110W011

6. Secure the camshaft sprocket in a vise using the **SST**.
7. Tighten the variable valve timing actuator tightening bolt in two steps.
   (1) Tighten to **40 N·m {4.1 kgf·m, 29.5 ft·lbf}**.
   (2) Tighten **90°**.

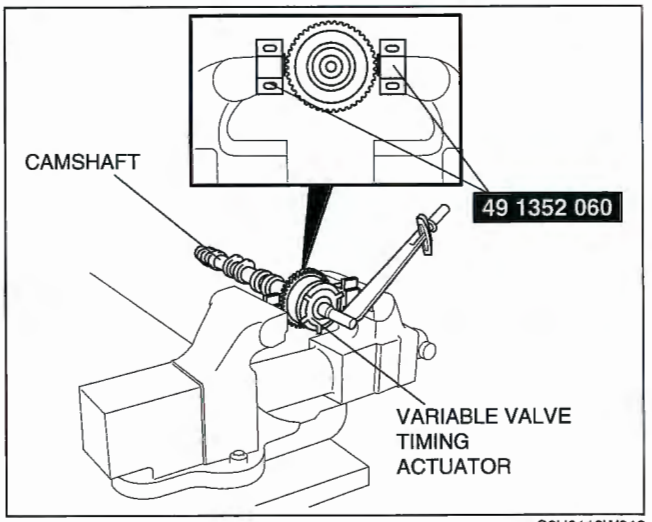

C6U0110W012

OIL CONTROL VALVE (OCV) REMOVAL/INSTALLATION [AJ]

E6U011014420W01

RH bank

1. Disconnect the negative battery cable.
2. Remove the plug hole plate.
3. Remove the dynamic chamber. (See 01–13C–2 INTAKE AIR SYSTEM REMOVAL/INSTALLATION [AJ].)
4. Remove the ignition coil. (See 01–18A–2 IGNITION COIL REMOVAL/INSTALLATION [L3, AJ].)
5. Remove the OCV connector.
6. Remove the ventilation hose.
7. Remove the cylinder head cover tightening bolt.
8. Remove the OCV with cylinder head cover raised as shown in the figure.

Note

- Take care not to let the OCV tightening bolt slip into the timing chain cover when removing the OCV tightening bolt from engine front.

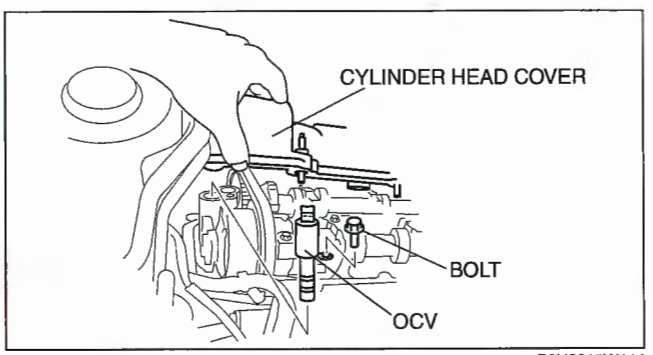

B6U2215W114

9. Install the OCV.

Tightening torque
8.0—12.0 N·m {82—122 kgf·cm, 71—106 in·lbf}

10. Install the cylinder head cover. (See 01–10C–22 Cylinder Head Cover (RH) Installation Note.)
11. Install the ventilation hose.
12. Install the OCV connector.
13. Install the ignition coil. (See 01–18A–2 IGNITION COIL REMOVAL/INSTALLATION [L3, AJ].)
14. Install the plug hole plate.
15. Install the dynamic chamber. (See 01–13C–2 INTAKE AIR SYSTEM REMOVAL/INSTALLATION [AJ].)

LH bank

1. Disconnect the negative battery cable.
2. Remove the plug hole plate.
3. Remove the ignition coil. (See 01–18A–2 IGNITION COIL REMOVAL/INSTALLATION [L3, AJ].)
4. Remove the OCV connector.
5. Remove the ventilation hose.
6. Remove the cylinder head cover.
7. Remove the OCV.
8. Install the OCV.

   Tightening torque
   8.0—12.0 N·m {82—122 kgf·cm, 71—106 in·lbf}

9. Install the cylinder head cover. (See 01–10C–22 Cylinder Head Cover (RH) Installation Note.)
10. Install the ventilation hose.
11. Install the OCV connector.
12. Install the ignition coil. (See 01–18A–2 IGNITION COIL REMOVAL/INSTALLATION [L3, AJ].)
13. Install the plug hole plate.

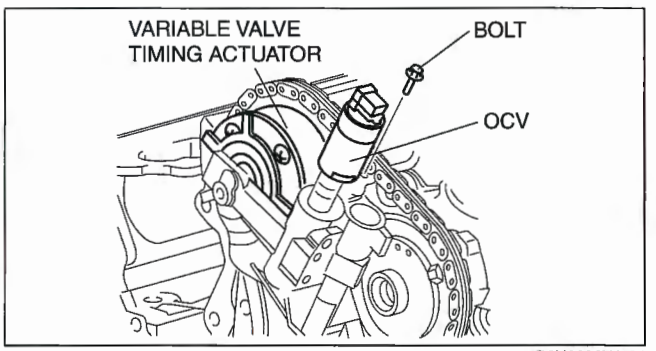

B6U2226W101

OIL CONTROL VALVE (OCV) INSPECTION [AJ]

E6U011014420W02

Coil Resistance Inspection

1. Disconnect the negative battery cable.
2. Disconnect the oil control valve (OCV) connector.
3. Measure the resistance between terminals A and B using an ohmmeter.
   - If not as specified, replace the oil control valve (OCV).

   Specification
   7.05—7.95 ohms

4. Connect the oil control valve (OCV) connector.

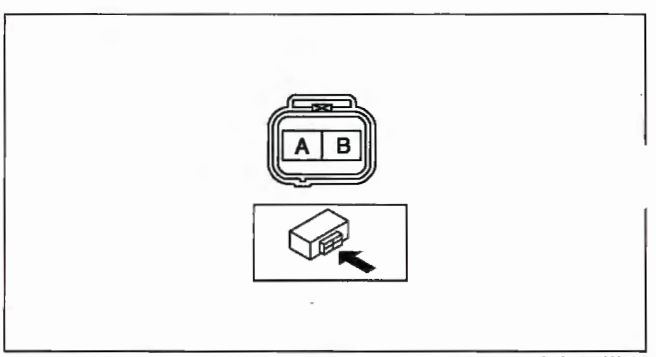

A6A2226W101

Spool Valve Operation Inspection

1. Disconnect the negative battery cable.
2. Remove the oil control valve (OCV).
   Verify that the spool valve in the oil control valve (OCV) is in the maximum valve timing retard position as indicated in the figure.
   - If not as specified, replace the oil control valve (OCV).
4. Verify that the battery is fully charged.
   - If not as specified, recharge the battery.

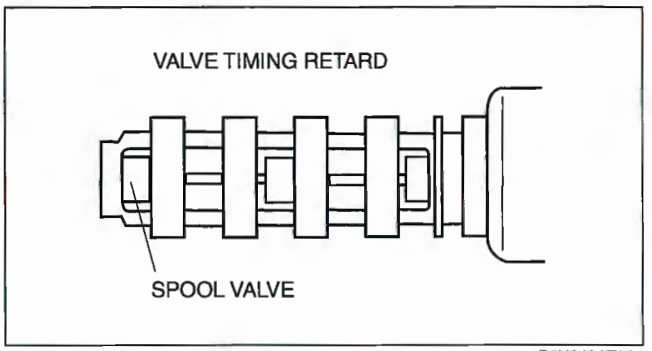

B6U2424E001

5. Apply battery positive voltage between the oil control valve (OCV) terminals and verify that the spool valve operates and moves to the maximum valve timing advance position.

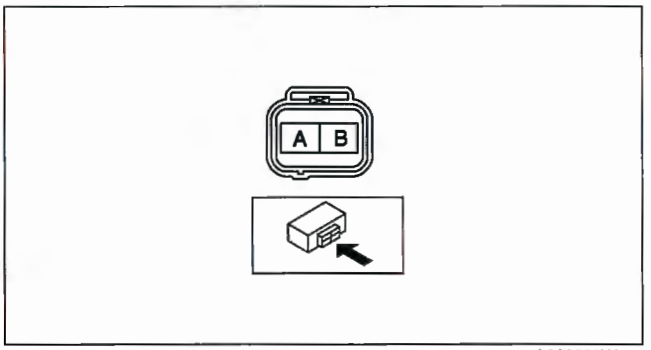

A6A2226W101

   - If not as specified, replace the oil control valve (OCV).

   Note
   - When applying battery positive voltage between the oil control valve (OCV) terminals, the connection can be either of the following:
     — Positive battery cable to terminal A, negative battery cable to terminal B
     — Positive battery cable to terminal B, negative battery cable to terminal A

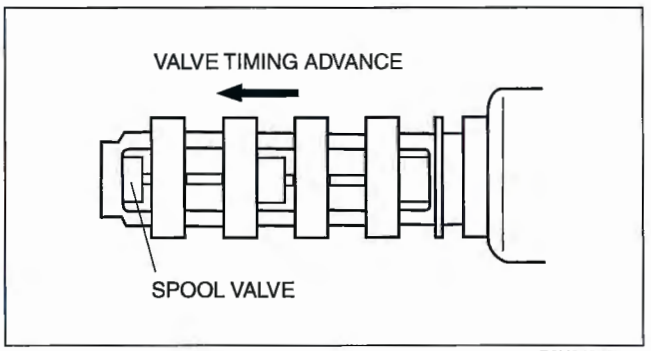

B6U2424E002

6. Stop applying battery positive voltage and verify that the spool valve returns to the maximum valve timing retard position.
   - If not as specified, replace the oil control valve (OCV).

01–11A LUBRICATION [L3, AJ]

LUBRICATION SYSTEM
LOCATION INDEX [L3, AJ] 01–11A–2
ENGINE OIL LEVEL INSPECTION
[L3, AJ] 01–11A–3
ENGINE OIL REPLACEMENT
[L3, AJ] 01–11A–3
L3 ..... **01–11A–3**
AJ **01–11A–4**
OIL PRESSURE INSPECTION
[L3, AJ] 01–11A–5
L3 ..... **01–11A–5**
AJ **01–11A–6**
OIL FILTER REPLACEMENT
[L3, AJ] 01–11A–7
L3 ..... **01–11A–7**
AJ **01–11A–8**
OIL PAN REMOVAL/INSTALLATION
[L3, AJ] 01–11A–8
L3 ..... **01–11A–8**
Oil Pan Removal Note (L3) **01–11A–9**
Oil Pan Installation Note (L3) **01–11A–9**
AJ **01–11A–10**
Oil Pan Removal Note (AJ) **01–11A–11**
Oil Pan Gasket Installation Note (AJ) **01–11A–11**
Oil Pan Installation Note (AJ) **01–11A–11**
OIL PUMP REMOVAL/INSTALLATION
[L3, AJ] 01–11A–12
L3 ..... **01–11A–12**
Oil Pump Sprocket Removal/Installation Note (L3) **01–11A–13**
Oil Pump Installation Note (L3) **01–11A–13**
AJ **01–11A–14**
Oil Pump Removal Note (AJ) **01–11A–15**
Oil Pump Installation Note (AJ) **01–11A–15**

LUBRICATION SYSTEM LOCATION INDEX [L3, AJ]

E6U011100000W01

L3

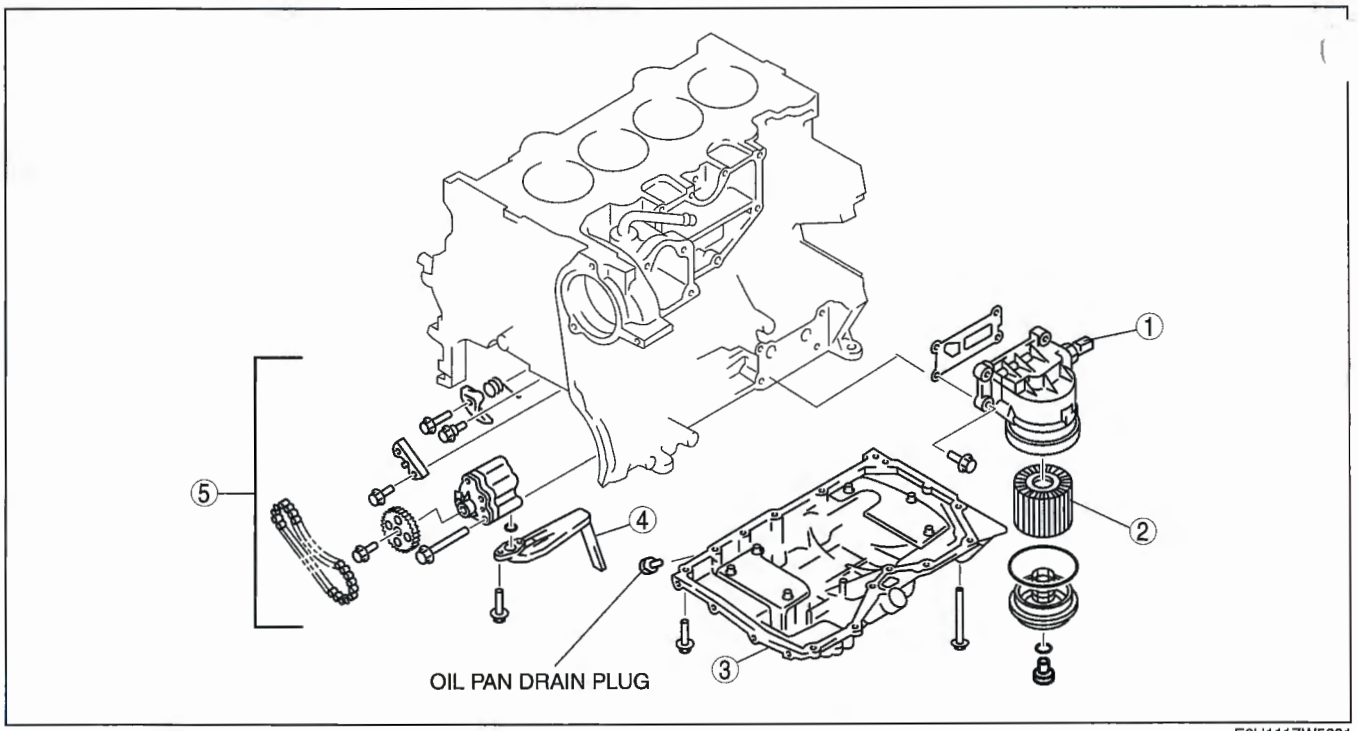

E6U111ZW5001

AJ

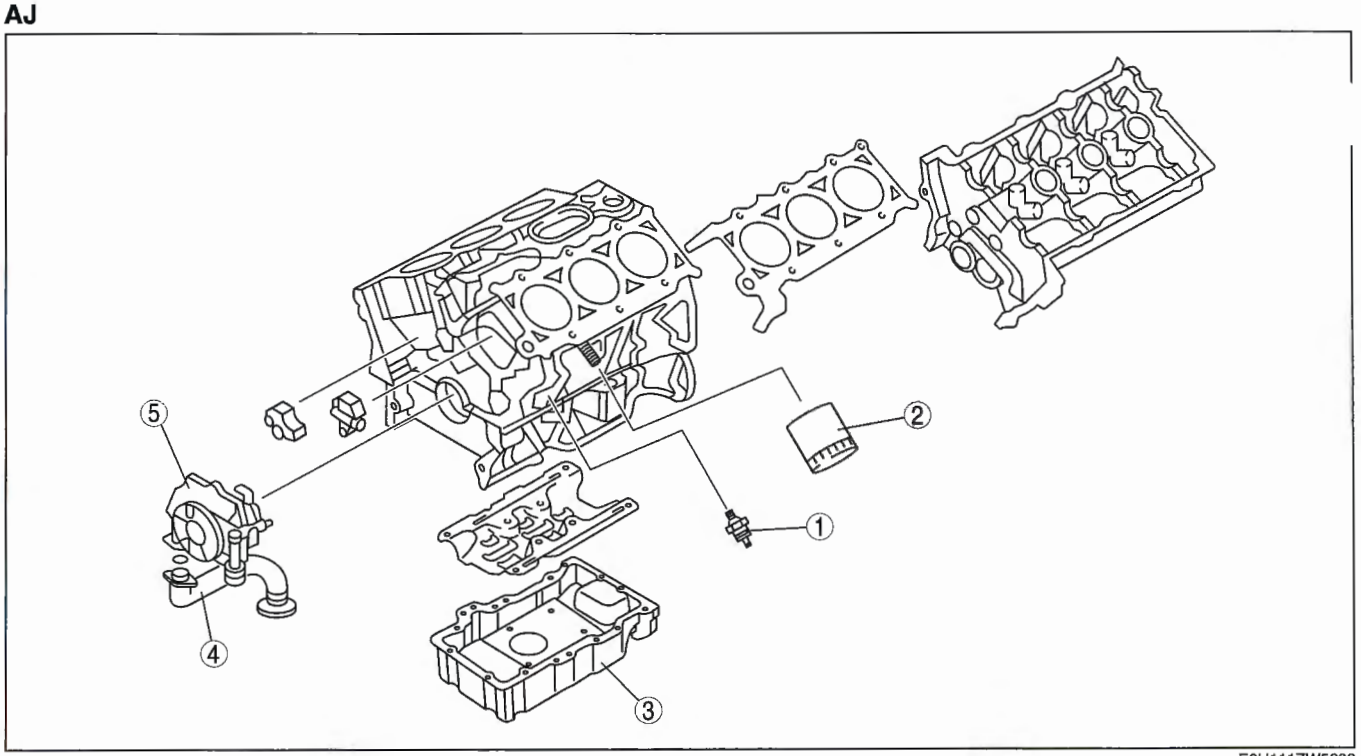

E6U111ZW5002

1	Oil pressure switch (See 01–11A–5 OIL PRESSURE INSPECTION [L3, AJ].)
2	Oil filter (See 01–11A–7 OIL FILTER REPLACEMENT [L3, AJ].)
3	Oil pan (See 01–11A–8 OIL PAN REMOVAL/ INSTALLATION [L3, AJ].)
4	Oil strainer (See 01–11A–12 OIL PUMP REMOVAL/ INSTALLATION [L3, AJ].)
5	Oil pump component (See 01–11A–12 OIL PUMP REMOVAL/ INSTALLATION [L3, AJ].)

ENGINE OIL LEVEL INSPECTION [L3, AJ]

E6U011114001W01

1. Position the vehicle on level ground.
2. Warm up the engine to normal operating temperature. Stop the engine and wait for **5 min**.
3. Remove the dipstick and verify that the oil level is between the F and L marks on the dipstick and inspect the engine oil condition.
   - If the oil level is below the L mark, add the recommended engine oil.
   - If necessary, replace with the recommended engine oil.

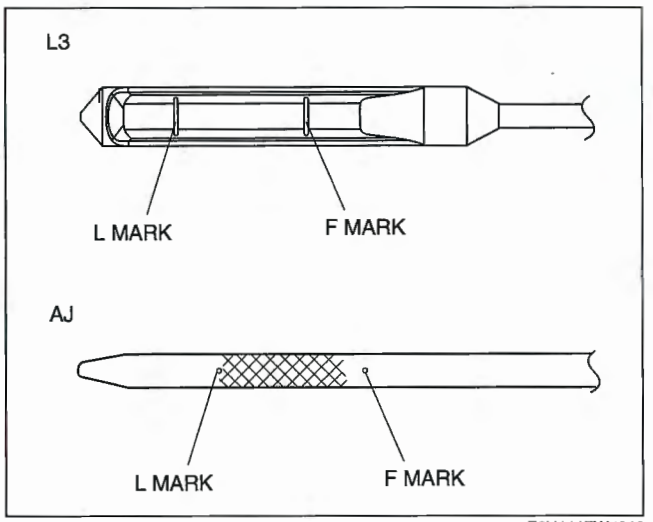

E6U111ZW5013

ENGINE OIL REPLACEMENT [L3, AJ]

E6U011114001W02

Warning

- **Hot engines and engine oil can cause severe burns. Turn off the engine and wait until it and the engine oil have cooled.**
- **A vehicle that is lifted but not securely supported on safety stands is dangerous. It can slip or fall, causing death or serious injury. Never work around or under a lifted vehicle if it is not securely supported on safety stands.**
- **Continuous exposure to USED engine oil has caused skin cancer in laboratory mice. Protect your skin by washing with soap and water immediately after working with engine oil.**

Caution

- **In case you spill the engine oil on the exhaust system, wipe it off completely. If you fail to wipe the spilled engine oil, it will produce fumes because of the heat.**

L3

1. Position the vehicle on level ground.
2. Remove the oil filler cap.
3. Remove the under cover.
4. Remove the oil pan drain plug.
5. Drain the engine oil into a container.
6. Inspect the rubber seal of the oil pan drain plug and make sure there are no cracks or damage.
   - If necessary, replace the oil pan drain plug.
7. Clean the flange surface (seal rubber) on the oil pan drain plug, then install the oil pan drain plug.

Oil pan drain plug tightening torque
25—30 N·m {2.6—3.0 kgf·m, 19—22 ft·lbf}

Note

- The amount of residual oil in the engine can vary according to factors such as the replacement method, oil temperature. Verify the oil level after engine oil replacement.

8. Refill the following type and amount of the engine oil.

Oil capacity

L {US qt, Imp qt}

Item	Specification
	L3
Oil replacement	3.9 {4.1, 3.4}
Oil and oil filter replacement	4.3 {4.5, 3.8}
Total (dry engine)	4.6 {4.8, 4.0}

Engine oil specification

Item	U.S.A. and CANADA	Except U.S.A. and CANADA
Engine oil grade	(ILSAC)	API SL or ILSAC
Engine oil viscosity	5W-20	

9. Install the oil filler cap.
10. Start the engine and confirm that there is no oil leakage.
    - If there is oil leakage, repair or replace the applicable part.
11. Inspect the oil level. (See 01–11A–3 ENGINE OIL LEVEL INSPECTION [L3, AJ].)
12. Install the under cover.

AJ

1. Position the vehicle on level ground.
2. Remove the oil filler cap.
3. Remove the under cover.
4. Remove the oil pan drain plug.
5. Drain the engine oil into a container.
6. Inspect the rubber seal of the oil pan drain plug and make sure there are no cracks or damage.
    - If necessary, replace the oil pan drain plug.
7. Clean the flange surface (seal rubber) on the oil pan drain plug, then install the oil pan drain plug.

Tightening torque
22—30 N·m {2.2—3.0 kgf·m, 16.3—21.6 ft·lbf}

Note
- The amount of residual oil in the engine can vary according to the replacement method, oil temperature, etc. Verify the oil level after engine oil replacement.

8. Refill the following type and amount of the engine oil.

Oil capacity

L {US qt, Imp qt}

Item	Specifications
	AJ
Oil replacement	5.2 {5.5, 4.6}
Oil and oil filter replacement	5.7 {6.0, 5.0}
Total (dry engine)	6.2 {6.6, 5.5}

Engine oil specification

Item	U.S.A. and CANADA	Except U.S.A. and CANADA
Engine oil grade	(ILSAC)	(ILSAC) API SL or ILSAC
Engine oil viscosity	5W-20	

9. Install the oil filler cap.
10. Start the engine and confirm that there is no oil leakage.
    - If there is oil leakage, repair or replace the applicable part.

Inspect the oil level. (See 01–11A–3 ENGINE OIL LEVEL INSPECTION [L3, AJ].)

Install the under cover.

OIL PRESSURE INSPECTION [L3, AJ]

E6U011118500W01

L3

Warning

- **Continuous exposure to USED engine oil has caused skin cancer in laboratory mice. Protect your skin by washing with soap and water immediately after working with engine oil.**
- **Hot engines and the engine oil can cause severe burns. Turn off the engine and wait until it and the engine oil have cooled.**

1. Remove the under cover.
2. Remove the oil pressure switch.
3. Screw the **SSTs** into the oil pressure switch installation hole.
4. Warm up the engine to normal operating temperature.
5. Run the engine at the specified speed, and note the gauge readings.
   - If not within the specification, inspect for the cause and repair or replace if necessary.

Note

- The oil pressure can vary with oil viscosity and temperature.

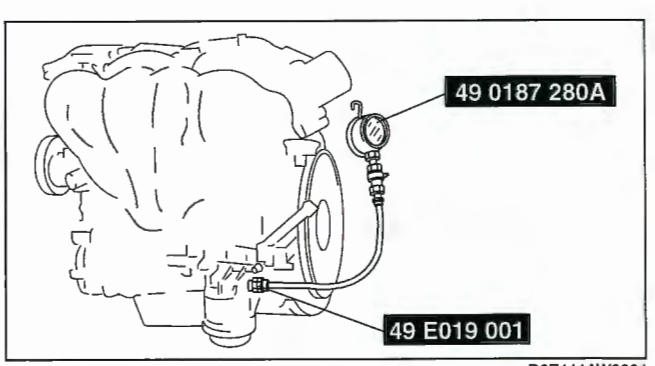

D6E111AW3004

Oil pressure

337—591 kPa {3.44—6.03 kgf/cm^2, 33.9—75.5 psi} [3,000 rpm]

6. Stop the engine and wait until it is cool.
7. Remove the **SSTs**.

8. Apply silicone sealant to the oil pressure switch threads as shown in the figure.
9. Install the oil pressure switch.

   Tightening torque
   12—18 N·m {1.2—1.8 kgf·m, 9—13 ft·lbf}

10. Start the engine and confirm that there is no oil leakage.
    - If there is oil leakage, repair or replace applicable part.
11. Install the under cover.

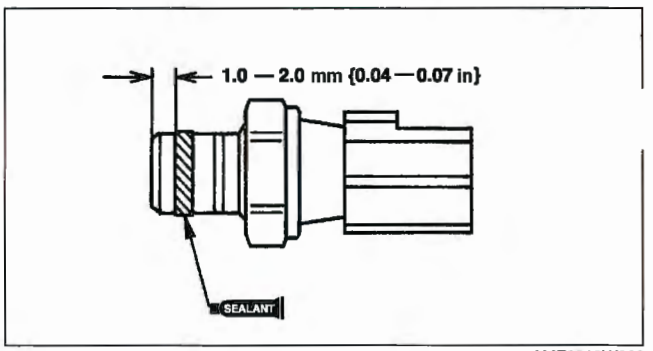

AME3310W002

AJ

Warning
- **Continuous exposure to USED engine oil has caused skin cancer in laboratory mice. Protect your skin by washing with soap and water immediately after working with engine oil.**
- **Hot engines and the engine oil can cause severe burns. Turn off the engine and wait until it and the engine oil have cooled.**

1. Remove the under cover.
2. Remove the drive belt. (See 01–10C–4 DRIVE BELT REPLACEMENT [AJ].)
3. Remove the A/C compressor with the pipe still connected. Position the A/C compressor so that it is out of the way. (See 07–11–15 A/C COMPRESSOR REMOVAL/INSTALLATION [L3, AJ].)
4. Remove the oil pressure switch.
5. Screw the **SSTs** into the oil pressure switch installation hole.
6. Install the A/C compressor. (See 07–11–15 A/C COMPRESSOR REMOVAL/INSTALLATION [L3, AJ].)
7. Install the drive belt. (See 01–10C–4 DRIVE BELT REPLACEMENT [AJ].)
8. Warm up the engine to normal operating temperature.
9. Run the engine at the specified speed, and note the gauge readings.
   - If not within the specification, inspect for the cause and repair or replace if necessary.

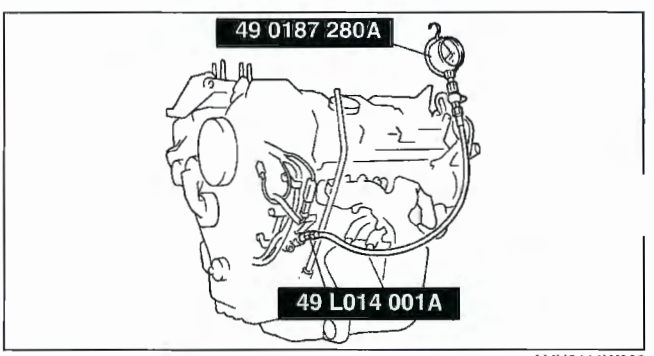

AMU0111W003

Note
- The oil pressure can vary with oil viscosity and temperature.

Oil pressure
138—310 kPa {1.40—3.17 kgf/cm^2, 20—45 psi} [1,500 rpm]

10. Stop the engine and wait until it is cool.
11. Remove the drive belt. (See 01–10C–4 DRIVE BELT REPLACEMENT [AJ].)
12. Remove the A/C compressor with the pipe still connected. Position the A/C compressor so that it is out of the way. (See 07–11–15 A/C COMPRESSOR REMOVAL/INSTALLATION [L3, AJ].)
13. Remove the **SSTs**.
14. Apply silicone sealant to the oil pressure switch threads as shown in the figure.
15. Install the oil pressure switch.

    Tightening torque
    19.1—25.9 N·m {1.95—2.64 kgf·m, 14.1—19.0 ft·lbf}

16. Install the A/C compressor. (See 07–11–15 A/C COMPRESSOR REMOVAL/INSTALLATION [L3, AJ].)
17. Install the drive belt. (See 01–10C–4 DRIVE BELT REPLACEMENT [AJ].)
18. Start the engine and confirm that there is no oil leakage.
    - If there is oil leakage, repair or replace applicable part.
19. Install the under cover.

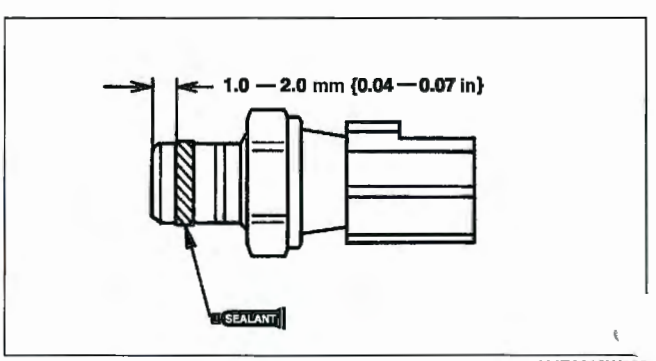

AME3310W002

OIL FILTER REPLACEMENT [L3, AJ]

E6U011114300W01

Warning
- **Continuous exposure with USED engine oil has caused skin cancer in laboratory mice. Protect your skin by washing with soap and water immediately after this work.**
- **Hot engines and engine oil can cause severe burns. Turn off the engine and wait until it and the engine oil have cooled.**

L3

Caution
- **To avoid damage to the oil filter, use only specified oil filter.**

1. Remove the under cover.
2. Loosen the oil filter drain plug. (Do not remove.)
3. Loosen the filter cover for 1 turn using a commercially available, cup-type oil filter wrench (**diameter- 74 mm {2.9 in}, 14 sided**).
4. Remove the oil filter drain plug, and drain the engine oil.

Note
- Oil could be easily drained when the air is in the filter.

5. Loosen the oil filter cover for another 1 turn.

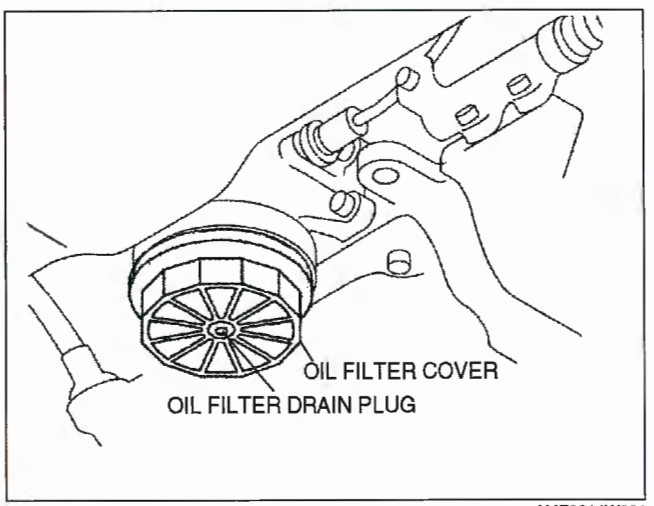

AME3314W001

6. Remove the oil filter cover and the oil filter.
7. Use a clean rag to wipe off the mounting surface on the oil filter adapter and the oil filter cover.
8. Apply clean oil to a new O-ring of the oil filter cover.
9. Apply clean oil to a new O-ring of the oil filter drain plug.
10. Install the oil filter, oil filter drain plug, and oil filter cover.
11. Tighten the oil filter cover and the oil filter drain plug.

Tightening torque
Oil filter cover:30—35 N·m {3.1—3.5 kgf·m, 22.2—25.8 ft·lbf}
Oil filter drain plug:9—11 N·m {91.8—112.2 kgf·cm, 79.6—97.2 in·lbf}

12. Start the engine and confirm that there is no oil leakage.
    - If there is oil leakage, repair or replace applicable part.
13. Inspect the oil level. (See 01–11A–3 ENGINE OIL LEVEL INSPECTION [L3, AJ].)
14. Install the under cover.

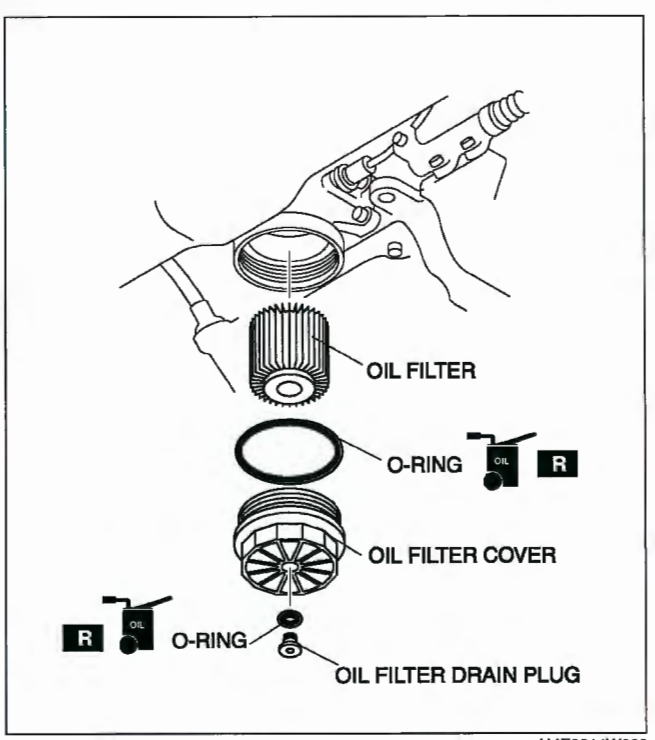

AME3314W002

AJ

1. Remove the under cover.
2. Remove the oil filter from above using a filter wrench.
3. Use a clean rag to wipe off the mounting surface.
4. Apply clean engine oil to the O-ring of new oil filter.
5. Install the oil filter until the O-ring contacts the sealing surface.
6. Tighten the filter 3/4 turns by hand.

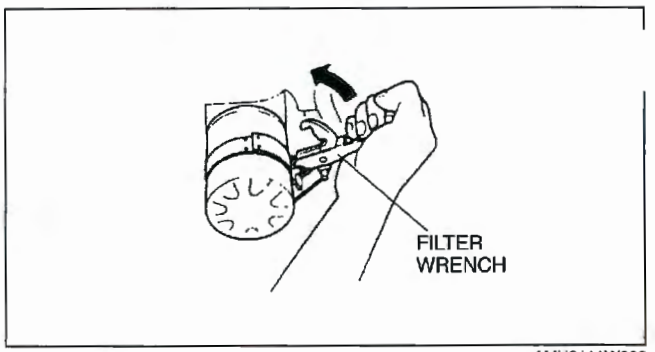

AMU0111W002

Caution

- **In case you spill engine oil on the exhaust system or the engine, wipe it off completely. If you fail to wipe the spilled engine oil, it will produce fumes because of the heat.**

7. Start the engine and confirm that there is no oil leakage.
   - If there is oil leakage, repair or replace applicable part.
8. Inspect the oil level. (See 01–11A–3 ENGINE OIL LEVEL INSPECTION [L3, AJ].)
9. Install the under cover.

OIL PAN REMOVAL/INSTALLATION [L3, AJ]

E6U011110040W01

L3

1. Disconnect the negative battery cable.
2. Remove the under cover.
3. Drain the engine oil. (See 01–11A–3 ENGINE OIL REPLACEMENT [L3, AJ].)
4. Remove the engine front cover. (See 01–10A–9 TIMING CHAIN REMOVAL/INSTALLATION [L3].)
5. Remove in the order indicated in the table.
6. Install in the reverse order of removal.
7. Refill the specified type and amount of the engine oil. (See 01–11A–3 ENGINE OIL REPLACEMENT [L3, A
8. Start the engine and confirm that there is no oil leakage.
   - If there is oil leakage, repair or replace applicable part.
9. Inspect the oil level. (See 01–11A–3 ENGINE OIL LEVEL INSPECTION [L3, AJ].)

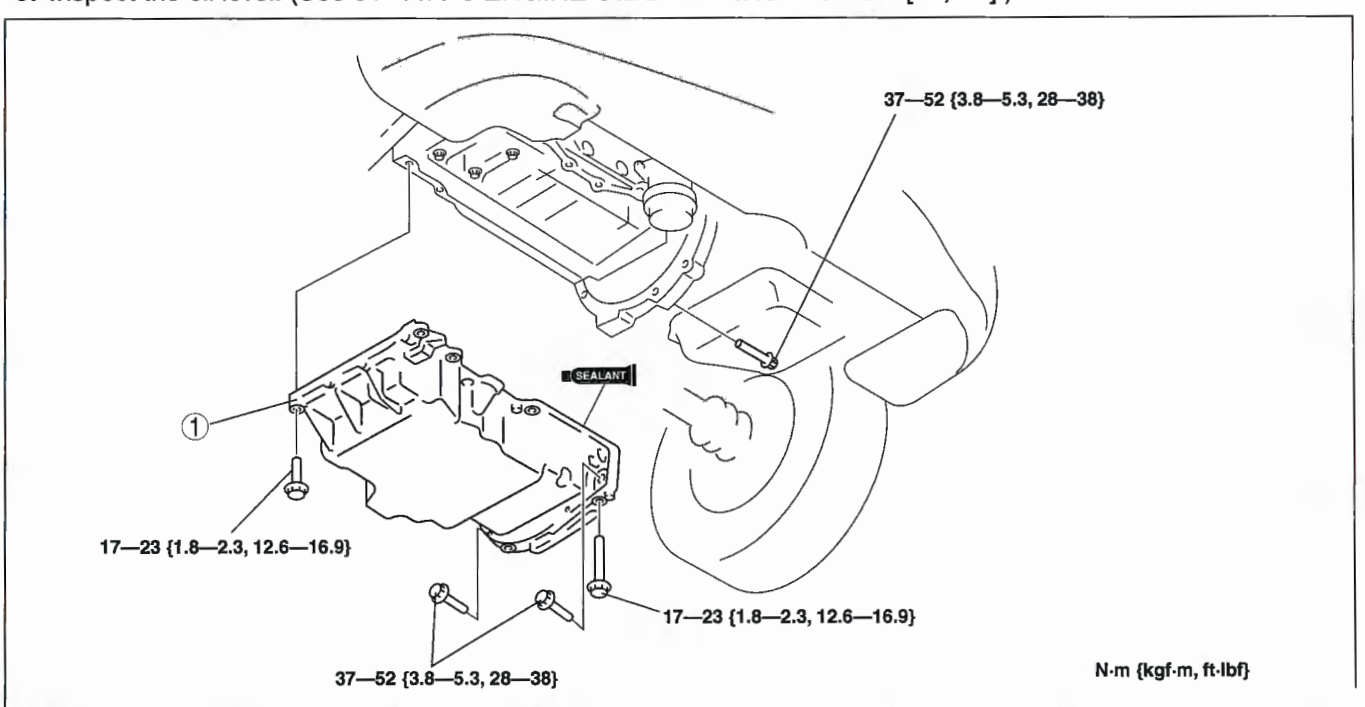

E6U111ZW

1	Oil pan (See 01–11A–9 Oil Pan Removal Note (L3).) (See 01–11A–9 Oil Pan Installation Note (L3).)

Oil Pan Removal Note (L3)

1. Remove the oil pan using the separator tool.

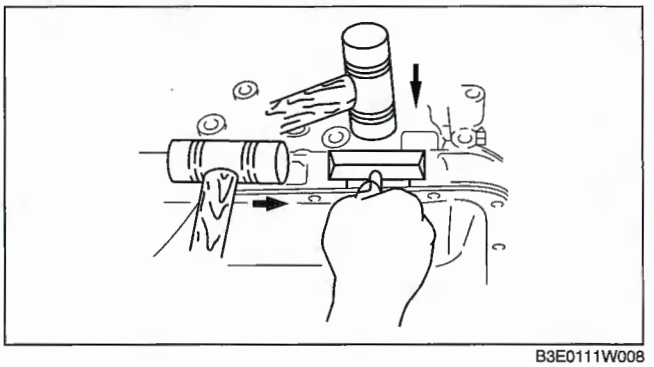

B3E0111W008

Oil Pan Installation Note (L3)

Caution
- **Apply the silicon sealant in a single, unbroken line around the whole perimeter.**
- **Using bolts with the old seal adhering could cause cracks in the housing.**

1. Completely clean and remove any oil, dirt, sealant or other foreign material that may be adhering to the housing and oil pan.
2. When reusing the oil pan installation bolts, clean any old sealant from the bolts.

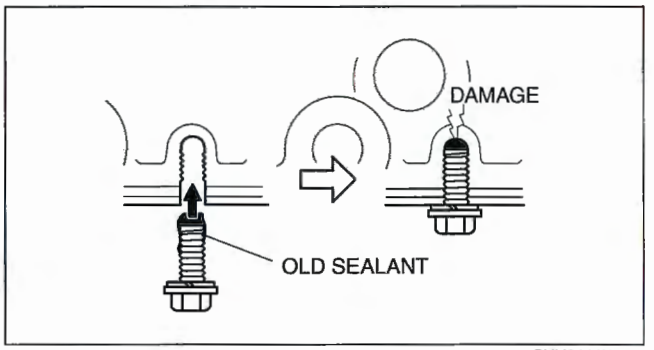

CHU0111W004

. Use a square ruler to align the oil pan and the cylinder block junction side on the engine front cover side.

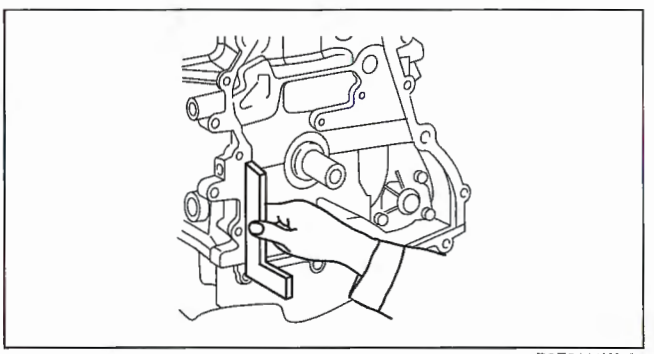

B3E0111W007

4. Apply silicone sealant to the oil pan along the inside of the bolt holes as shown in the figure.

Thickness
2.2—3.2 mm {0.087—0.126 in}

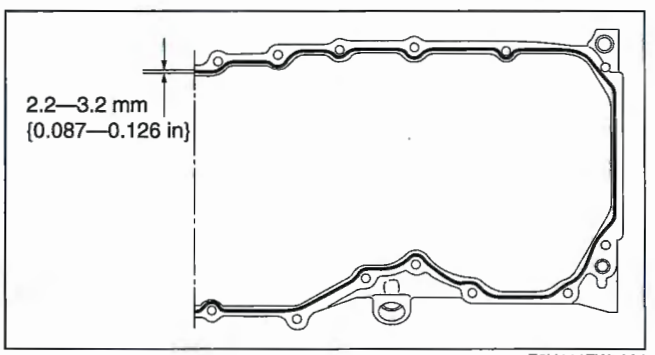

E6U111ZW5004

5. Tighten the bolts in the order shown in the figure.

Tightening torque
17—23 N·m {1.8—2.3 kgf·m, 12.6—16.9 ft·lbf}

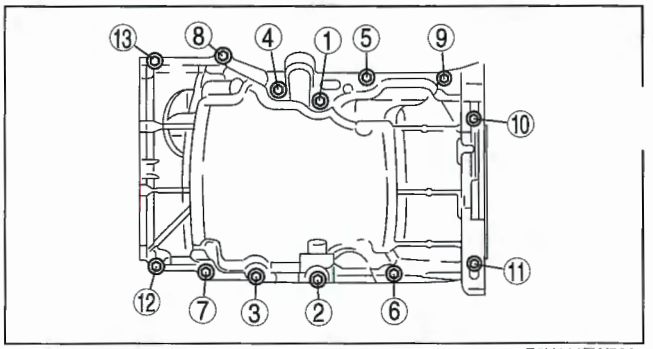

E6U111ZW5005

6. Tighten the oil pan-transaxle installation bolts.

Tightening torque
37—52 N·m {3.8—5.3 kgf·m, 28—38 ft·lbf}

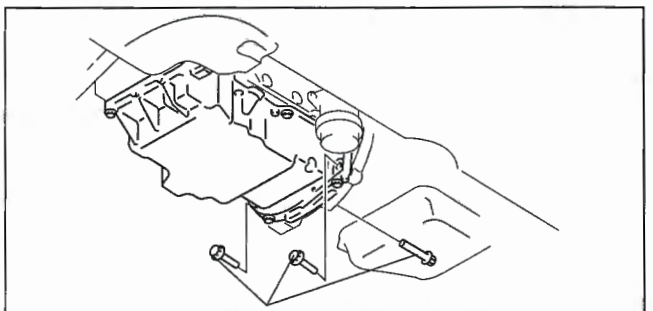

OIL PAN-TRANSAXLE INSTALLATION BOLTS

E6U111ZW5006

AJ

1. Disconnect the negative battery cable.
2. Remove the under cover.
3. Drain the engine oil. (See 01–11A–3 ENGINE OIL REPLACEMENT [L3, AJ].)
4. Remove the TWC (RH). (See 01–15C–2 EXHAUST SYSTEM REMOVAL/INSTALLATION [AJ].)
5. Remove in the order indicated in the table.
6. Install in the reverse order of removal.
7. Refill the specified type and amount of the engine oil. (See 01–11A–3 ENGINE OIL REPLACEMENT [L3, AJ].)
8. Start the engine and confirm that there is no oil leakage.
   - If there is oil leakage, repair or replace applicable part.
9. Inspect the oil level. (See 01–11A–3 ENGINE OIL LEVEL INSPECTION [L3, AJ].)

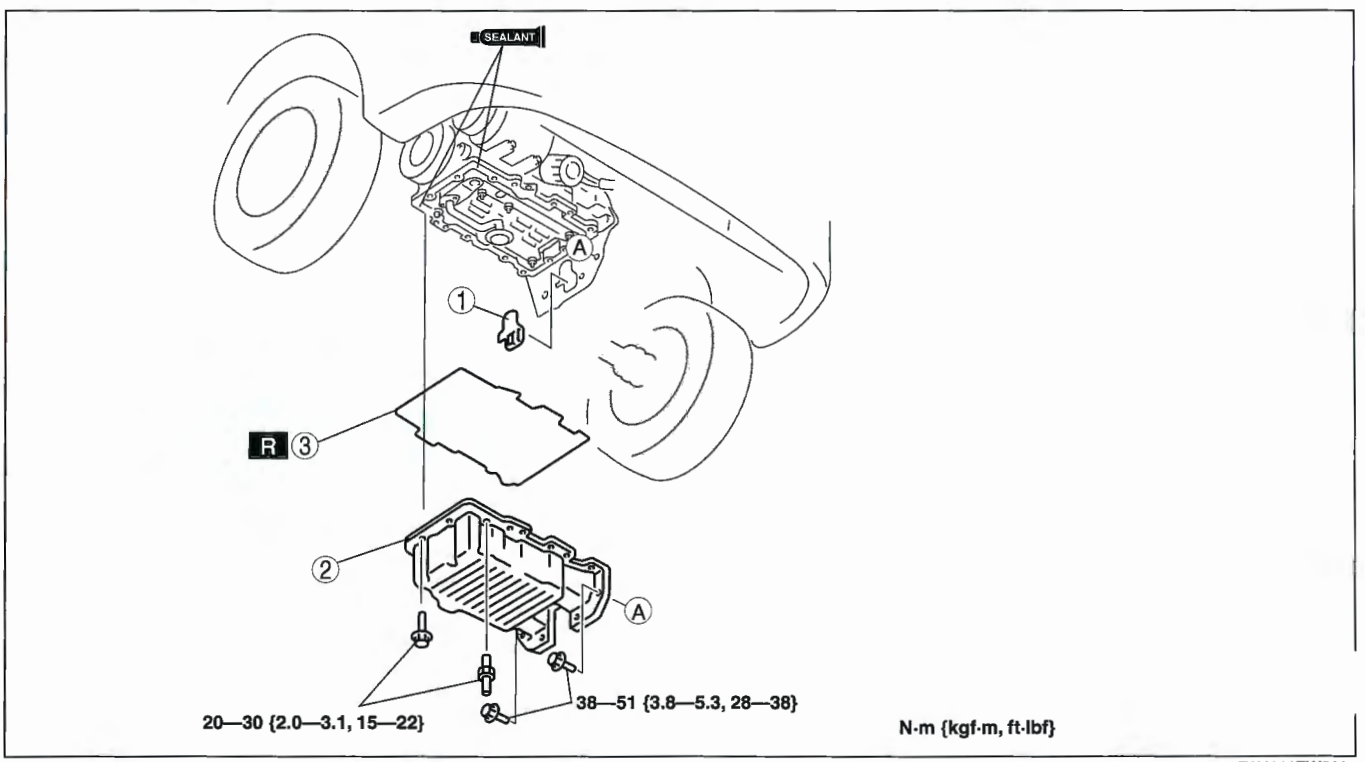

E6U111ZW5007

1	End plate cover
2	Oil Pan (See 01–11A–11 Oil Pan Removal Note (AJ).) (See 01–11A–11 Oil Pan Installation Note (AJ).)
3	Oil pan gasket (See 01–11A–11 Oil Pan Gasket Installation Note (AJ).)

Oil Pan Removal Note (AJ)

1. Remove the transaxle housing bolts from oil pan.

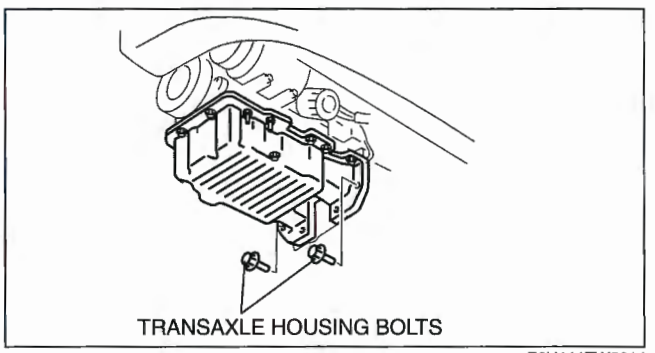

E6U111ZW5014

2. Loosen the oil pan bolts and studs in two or three passes in the order shown in the figure.

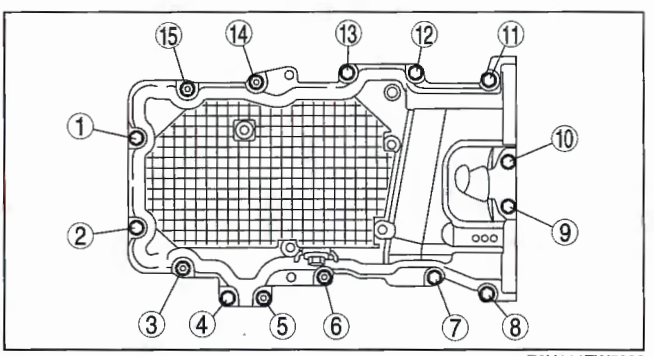

E6U111ZW5008

Oil Pan Gasket Installation Note (AJ)

1. Apply silicone sealant to the cylinder block as shown in the figure.

   Dot diameter
   10 mm {0.39 in}

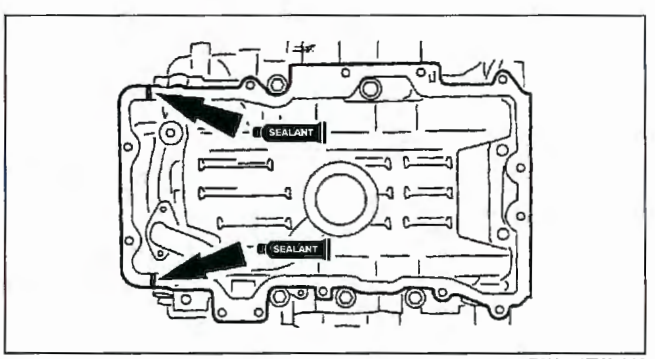

E6U111ZW5012

Oil Pan Installation Note (AJ)

1. Install the oil pan bolts and studs as shown in the figure.

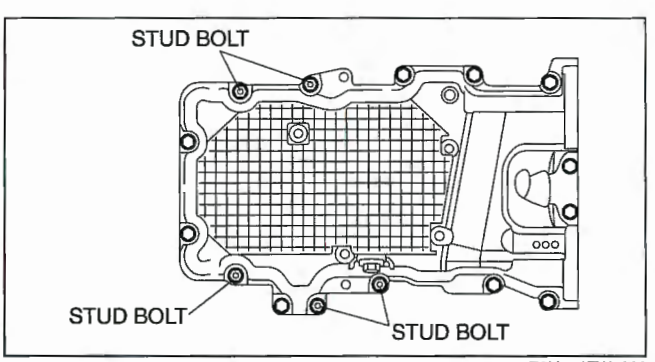

E6U111ZW5009

2. Tighten the transaxle housing bolts to oil pan.

Tightening torque
38—51 N·m {3.8—5.3 kgf·m, 28—38 ft·lbf}

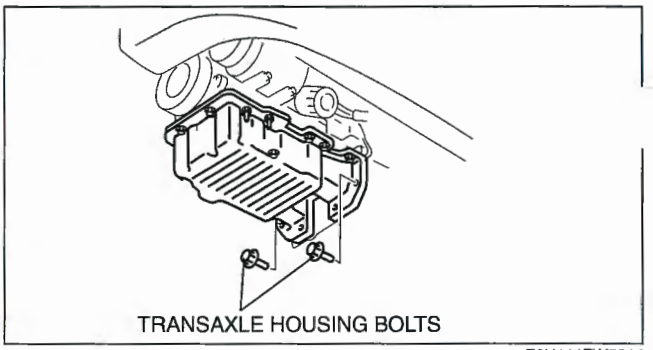

E6U111ZW5014

3. Tighten the oil pan bolts and studs in several passes in the order shown in the figure.

Tightening torque
20—30 N·m {2.0—3.1 kgf·m, 15—22 ft·lbf}

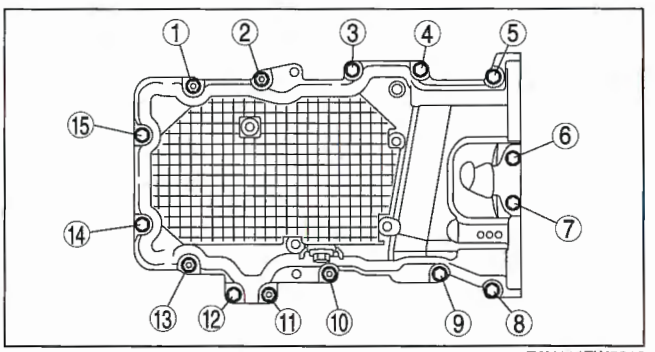

E6U111ZW5010

OIL PUMP REMOVAL/INSTALLATION [L3, AJ]

E6U011119220W01

L3

1. Disconnect the negative battery cable.
2. Remove the under cover.
3. Remove the oil pan. (See 01–11A–8 OIL PAN REMOVAL/INSTALLATION [L3, AJ].)
4. Remove in the order indicated in the table.
5. Install in the reverse order of removal.
6. Start the engine and confirm that there is no oil leakage.
   - If there is oil leakage, repair or replace applicable part.
7. Inspect the oil level. (See 01–11A–3 ENGINE OIL LEVEL INSPECTION [L3, AJ].)
8. Inspect the oil pressure. (See 01–11A–5 OIL PRESSURE INSPECTION [L3, AJ].)

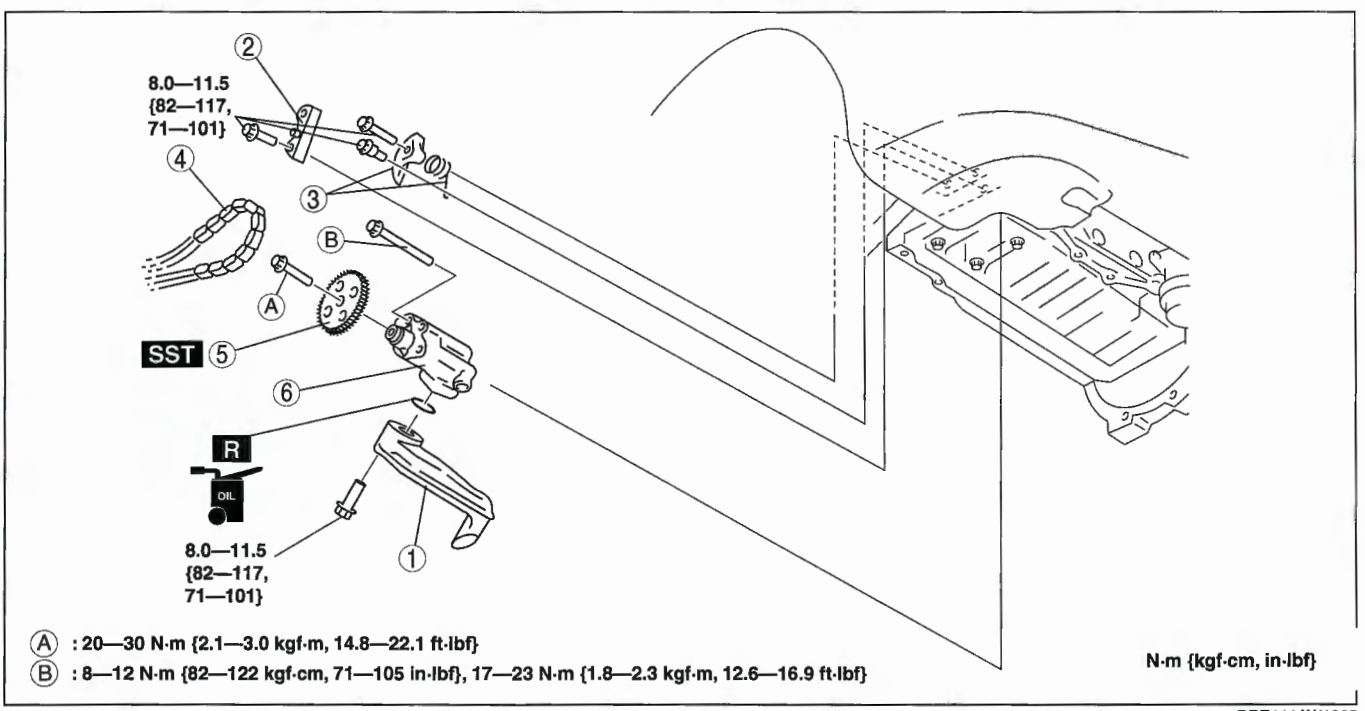

DPE111AW1005

1	Oil strainer	2	Oil pump chain guide

3	Oil pump chain tensioner
4	Oil pump chain
5	Oil pump sprocket (See 01–11A–13 Oil Pump Sprocket Removal/ Installation Note (L3).)
6	Oil pump (See 01–11A–13 Oil Pump Installation Note (L3).)

Oil Pump Sprocket Removal/Installation Note (L3)

1. Install the **SST** to the oil pump sprocket to stop the oil pump from rotating.

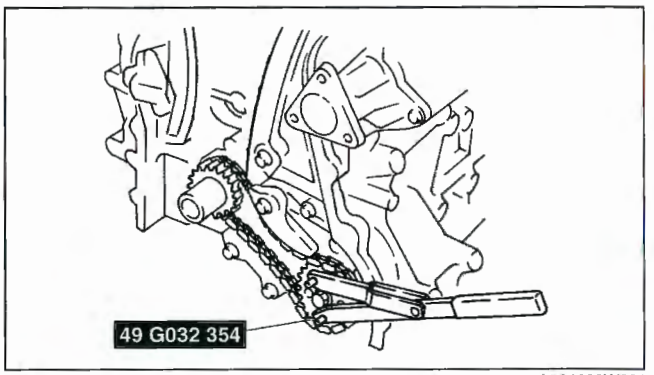

A6A3322W201

Oil Pump Installation Note (L3)

1. Tighten the oil pump bolts in two steps in the order shown in the figure.

   Tightening torque
   Step 1: 8—12 N·m {82—122 kgf·cm, 71—105 in·lbf}
   Step 2: 17—23 N·m {1.8—2.3 kgf·m, 12.6—16.9 ft·lbf}

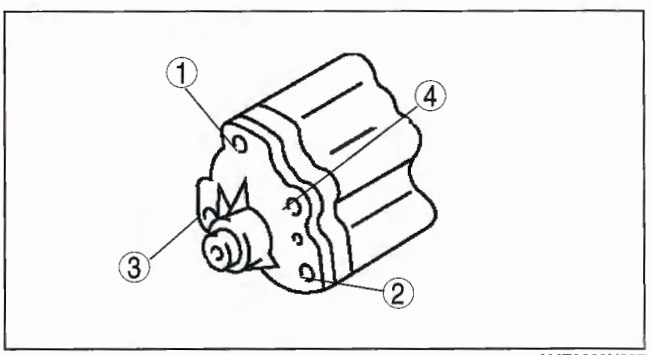

AME3300N007

AJ

1. Disconnect the negative battery cable.
2. Remove the under cover.
3. Remove the oil pan. (See 01–11A–8 OIL PAN REMOVAL/INSTALLATION [L3, AJ].)
4. Remove the timing chain. (See 01–10C–6 TIMING CHAIN REMOVAL/INSTALLATION [AJ].)
5. Remove in the order indicated in the table.
6. Install in the reverse order of removal.
7. Start the engine and confirm that there is no oil leakage.
   - If there is oil leakage, repair or replace applicable part.
8. Inspect the oil level. (See 01–11A–3 ENGINE OIL LEVEL INSPECTION [L3, AJ].)
9. Inspect the oil pressure. (See 01–11A–5 OIL PRESSURE INSPECTION [L3, AJ].)

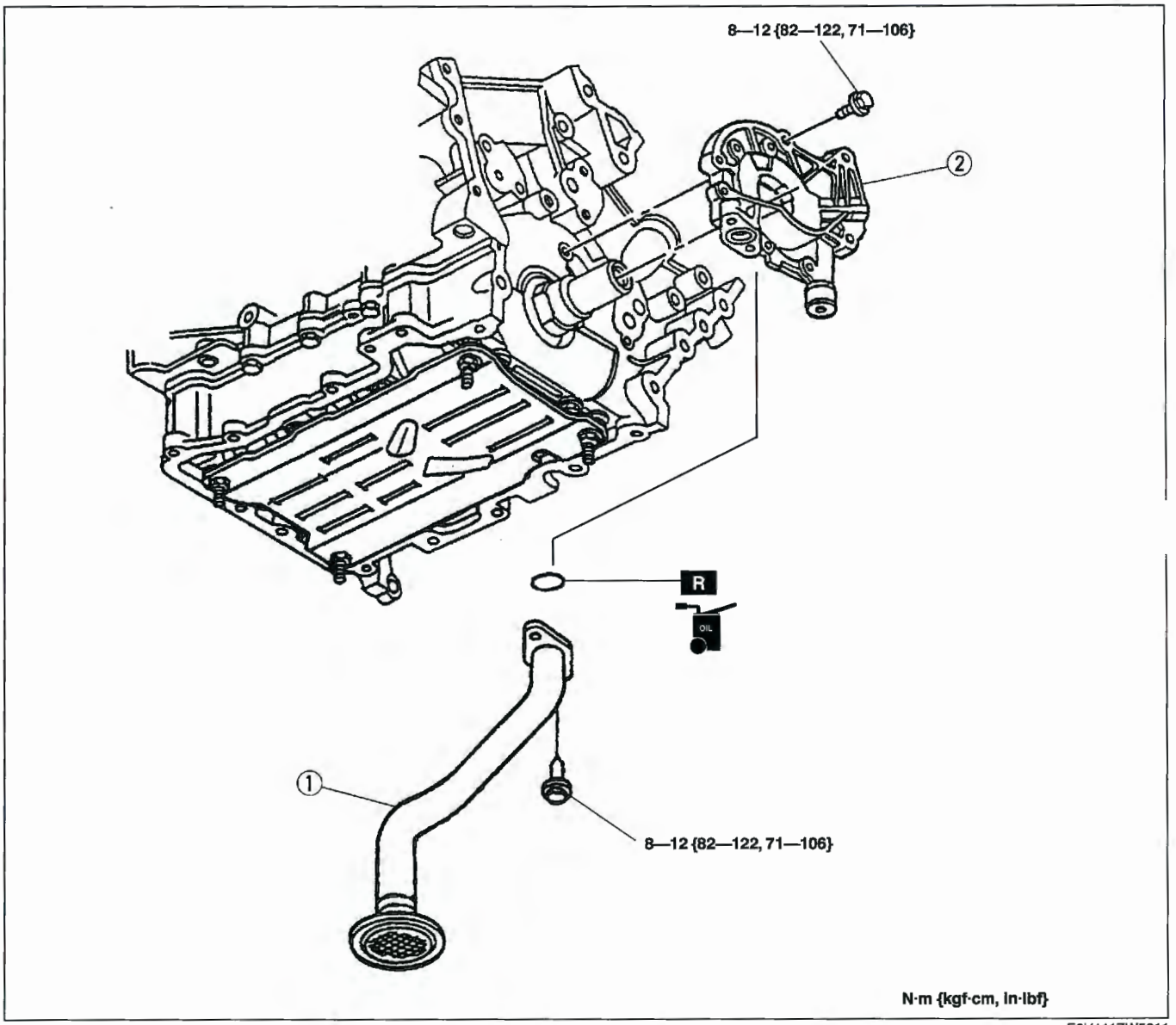

E6U111ZW5011

1	Oil strainer

2	Oil pump (See 01–11A–15 Oil Pump Removal Note (AJ).) (See 01–11A–15 Oil Pump Installation Note (AJ).)

Oil Pump Removal Note (AJ)

1. Loosen the oil pump bolts in the order shown in the figure.

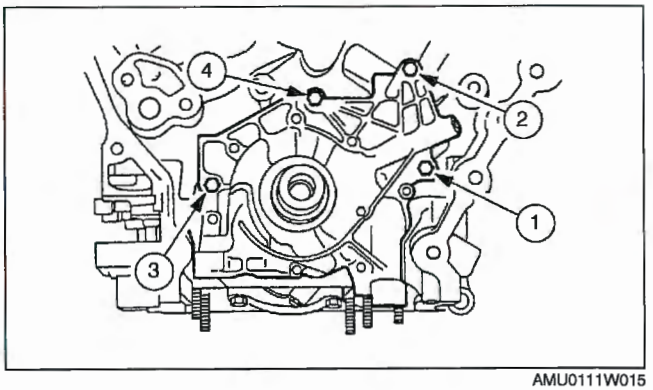

AMU0111W015

Oil Pump Installation Note (AJ)

1. Tighten the oil pump bolts in the order shown in the figure.

   Tightening torque
   8—12 N·m {82—122 kgf·cm, 71—106 in·lbf}

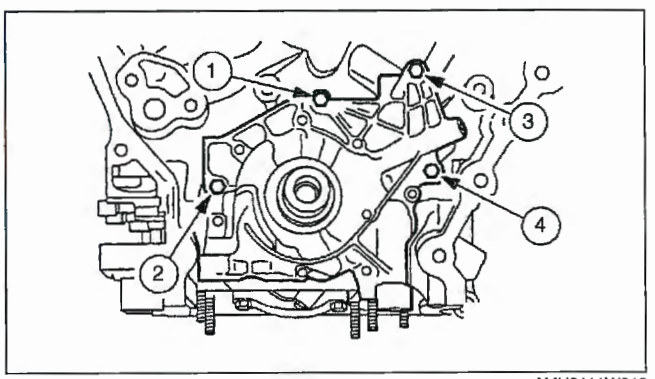

AMU0111W016

01–11B LUBRICATION [L3 WITH TC]

LUBRICATION SYSTEM
LOCATION INDEX [L3 WITH TC] 01–11B–1
ENGINE OIL LEVEL INSPECTION
[L3 WITH TC] 01–11B–2
ENGINE OIL REPLACEMENT
[L3 WITH TC] 01–11B–2
OIL PRESSURE INSPECTION
[L3 WITH TC] 01–11B–3
OIL FILTER REPLACEMENT
[L3 WITH TC] 01–11B–4
OIL COOLER REMOVAL/INSTALLATION
[L3 WITH TC] 01–11B–5
OIL PAN REMOVAL/INSTALLATION
[L3 WITH TC] 01–11B–5
Oil Pan Removal Note 01–11B–6
Oil Pan Installation Note 01–11B–6
OIL PUMP REMOVAL/INSTALLATION
[L3 WITH TC] 01–11B–8
Oil Pump Sprocket
Removal/Installation Note 01–11B–9
Oil Pump Installation Note 01–11B–9

LUBRICATION SYSTEM LOCATION INDEX [L3 WITH TC]

E6U011100000W02

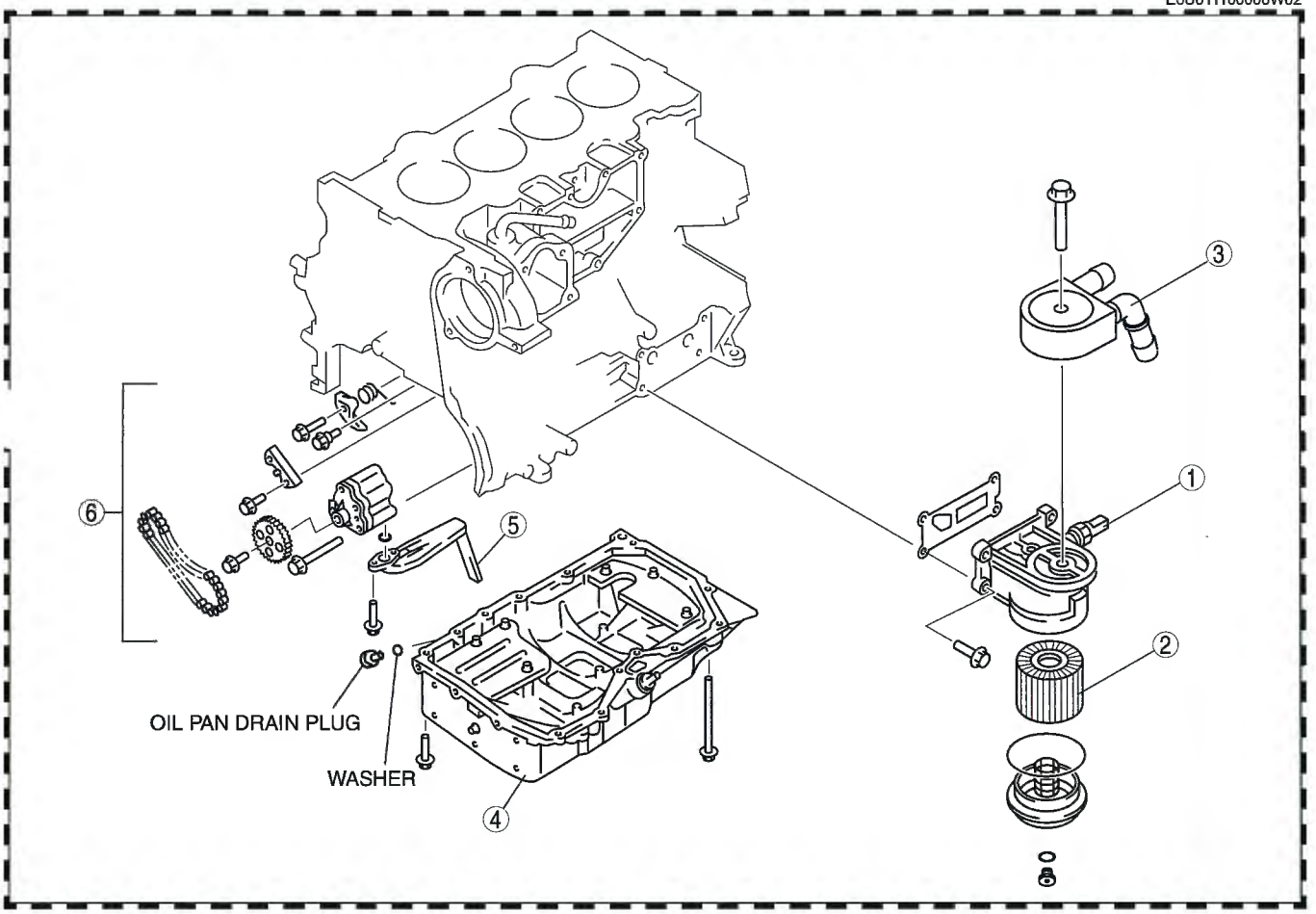

E6U111ZLA001

1	Oil pressure switch (See 01–11B–3 OIL PRESSURE INSPECTION [L3 WITH TC].)
2	Oil filter (See 01–11B–4 OIL FILTER REPLACEMENT [L3 WITH TC].)
3	Oil cooler (See 01–11B–5 OIL COOLER REMOVAL/ INSTALLATION [L3 WITH TC].)
4	Oil pan (See 01–11B–5 OIL PAN REMOVAL/ INSTALLATION [L3 WITH TC].)
5	Oil strainer (See 01–11B–8 OIL PUMP REMOVAL/ INSTALLATION [L3 WITH TC].)
6	Oil pump component (See 01–11B–8 OIL PUMP REMOVAL/ INSTALLATION [L3 WITH TC].)

ENGINE OIL LEVEL INSPECTION [L3 WITH TC]

E6U011114001W03

1. Position the vehicle on level ground.
2. Warm up the engine to normal operating temperature.
3. Stop the engine and wait for **5 min**.
4. Remove the dipstick and verify that the oil level is between the MIN and MAX marks on the dipstick and inspect the engine oil condition.
   - If the oil level is below the MIN mark, add the recommended engine oil.
   - If necessary, replace with the recommended engine oil.

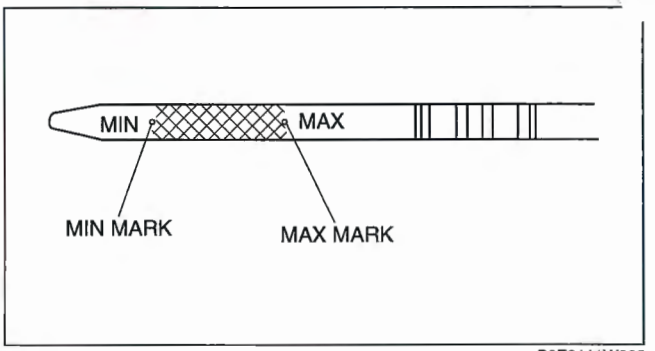

B3E0111W005

ENGINE OIL REPLACEMENT [L3 WITH TC]

E6U011114001W04

Warning

- **Hot engines and engine oil can cause severe burns. Turn off the engine and wait until it and the engine oil have cooled.**
- **A vehicle that is lifted but not securely supported on safety stands is dangerous. It can slip or fall, causing death or serious injury. Never work around or under a lifted vehicle if it is not securely supported on safety stands.**
- **Continuous exposure to USED engine oil has caused skin cancer in laboratory mice. Protect your skin by washing with soap and water immediately after working with engine oil.**

Caution

- **In case you spill the engine oil on the exhaust system, wipe it off completely. If you fail to wipe the spilled engine oil, it will produce fumes because of the heat.**

1. Position the vehicle on level ground.
2. Remove the oil filler cap.
3. Remove the under cover.
4. Remove the oil pan drain plug.
5. Drain the engine oil into a container.
6. Install the oil pan drain plug with a new washer.

Oil pan drain plug tightening torque
30—41 N·m {3.1—4.1 kgf·m, 23—30 ft·lbf}

Note

- The amount of residual oil in the engine can vary according to factors such as the replacement method and oil temperature. Verify the oil level after engine oil replacement.

7. Refill with the following type and amount of the engine oil.

Engine oil capacity (approx. quantity)
Oil replacement: 5.3 L {5.6 US qt, 4.7 Imp qt}
Oil and oil filter replacement: 5.7 L {6.0 US qt, 5.0 Imp qt}
Total (dry engine): 6.4 L {6.8 US qt, 5.6 Imp qt}

Engine oil specification

Item	U.S.A. and CANADA	Except U.S.A. and CANADA
Engine oil grade	(ILSAC)	API SL or ILSAC
Engine oil viscosity	5W-30	

8. Install the oil filler cap.
9. Start the engine and confirm that there is no oil leakage.
   - If there is oil leakage, repair or replace the applicable part.
10. Inspect the oil level. (See 01–11B–2 ENGINE OIL LEVEL INSPECTION [L3 WITH TC].)
11. Install the under cover.

OIL PRESSURE INSPECTION [L3 WITH TC]

E6U011114000W01

Warning
- **Hot engines and engine oil can cause severe burns. Turn off the engine and wait until it and the engine oil have cooled.**
- **A vehicle that is lifted but not securely supported on safety stands is dangerous. It can slip or fall, causing death or serious injury. Never work around or under a lifted vehicle if it is not securely supported on safety stands.**
- **Continuous exposure to USED engine oil has caused skin cancer in laboratory mice. Protect your skin by washing with soap and water immediately after working with engine oil.**

1. Remove the under cover.
2. Remove the oil pressure switch.
3. Screw the **SSTs** into the oil pressure switch installation hole.
4. Warm up the engine to normal operating temperature.
5. Run the engine at the specified speed, and note the gauge readings.
   - If not within the specification, inspect for the cause and repair or replace if necessary.

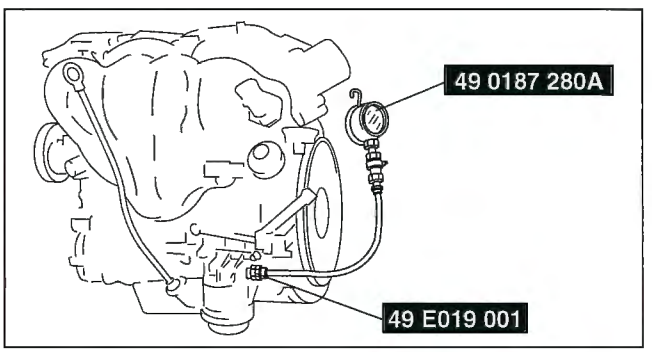

B3E0111W004

Note
- The oil pressure can vary with oil viscosity and temperature.

Oil pressure (reference value) [oil temperature: 100 °C {212 °F}]
297—551 kPa {3.03—5.61 kgf/cm^2, 43.1—79.9 psi} [3,000 rpm]

6. Stop the engine and wait until it is cool.
7. Remove the **SSTs**.

Caution
- **Make sure that there is no sealant between 1.0—2.0 mm {0.04—0.07 in} from the end of the oil pressure switch to prevent a possible operation malfunction.**

8. Apply silicone sealant to the oil pressure switch threads as shown in the figure.
9. Install the oil pressure switch.

Tightening torque
12—18 N·m {1.3—1.8 kgf·m, 9—13 ft·lbf}

10. Start the engine and confirm that there is no oil leakage.
    - If there is oil leakage, repair or replace the applicable part.
11. Install the under cover.

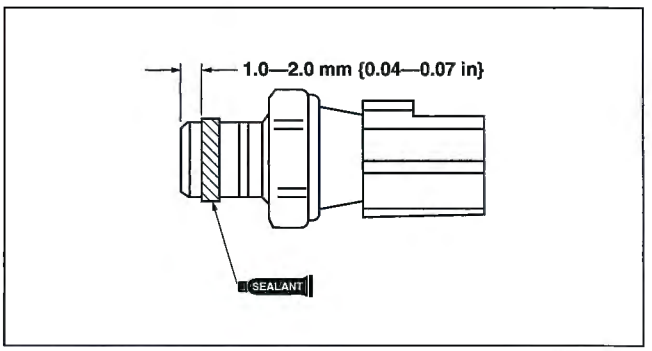

B3E0111W003

OIL FILTER REPLACEMENT [L3 WITH TC]

E6U011114300W02

Warning
- **Hot engines and engine oil can cause severe burns. Turn off the engine and wait until it and the engine oil have cooled.**
- **A vehicle that is lifted but not securely supported on safety stands is dangerous. It can slip or fall, causing death or serious injury. Never work around or under a lifted vehicle if it is not securely supported on safety stands.**
- **Continuous exposure to USED engine oil has caused skin cancer in laboratory mice. Protect your skin by washing with soap and water immediately after working with engine oil.**

Caution
- **In case you spill engine oil on the exhaust system, wipe it off completely. If you fail to wipe the spilled engine oil, it will produce fumes because of the heat.**
- **To avoid damage to the oil filter, use only specified oil filter.**

1. Remove the under cover.
2. Loosen the oil filter drain plug. (Do not remove.)
3. Loosen the filter cover for 1 turn using a commercially available, cup-type oil filter wrench (**74 mm {2.9 in} diameter, 14 sided**).
4. Remove the oil filter drain plug, and drain the engine oil.

Note
- Oil could be easily drained when the air is in the filter.

5. Loosen the oil filter cover for another 1 turn.

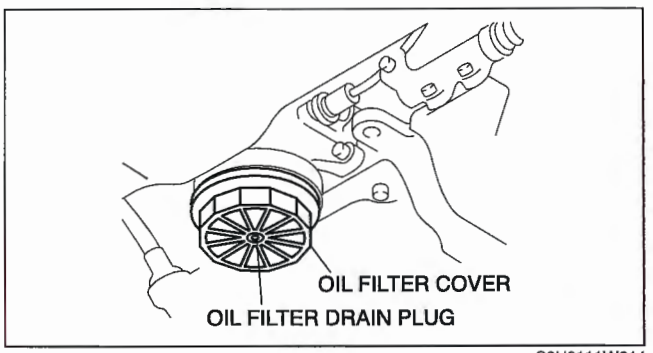

C3U0111W014

6. Remove the oil filter cover and the oil filter.
7. Use a clean rag to wipe off the mounting surface on the oil filter adapter and the oil filter cover.
8. Apply clean oil to a new O-ring of the oil filter cover.
9. Apply clean oil to a new O-ring of the oil filter drain plug.
10. Install the oil filter, oil filter drain plug, and oil filter cover.
11. Tighten the oil filter cover and the oil filter drain plug.

Tightening torque
Oil filter cover: 30—35 N·m {3.1—3.5 kgf·m, 22.2—25.8 ft·lbf}
Oil filter drain plug: 9—11 N·m {91.8—112.2 kgf·cm, 79.6—97.2 in·lbf}

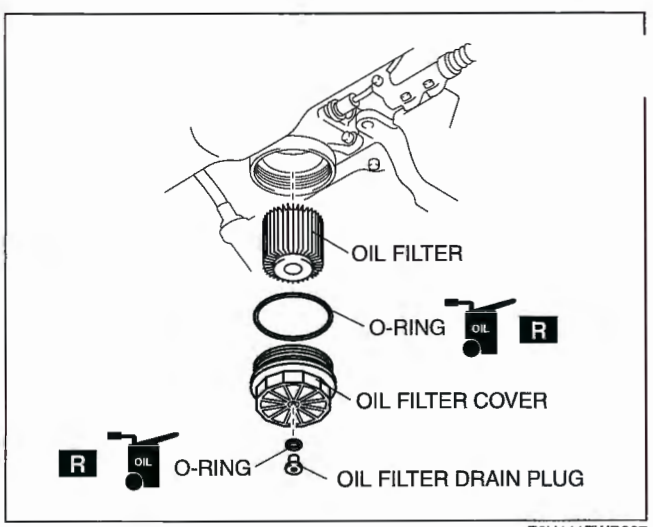

E6U111ZWB007

12. Start the engine and confirm that there is no oil leakage.
    - If there is oil leakage, repair or replace the applicable part.
13. Inspect the oil level. (See 01–11B–2 ENGINE OIL LEVEL INSPECTION [L3 WITH TC].)
14. Install the under cover.

OIL COOLER REMOVAL/INSTALLATION [L3 WITH TC]

E6U011114700W01

Warning

- **Hot engines and engine oil can cause severe burns. Turn off the engine and wait until it and the engine oil have cooled.**
- **A vehicle that is lifted but not securely supported on safety stands is dangerous. It can slip or fall, causing death or serious injury. Never work around or under a lifted vehicle if it is not securely supported on safety stands.**
- **Continuous exposure to USED engine oil has caused skin cancer in laboratory mice. Protect your skin by washing with soap and water immediately after working with engine oil.**

1. Disconnect the negative battery cable.
2. Remove the under cover.
3. Drain the engine coolant. (See 01–12B–4 ENGINE COOLANT REPLACEMENT [L3 WITH TC].)
4. Remove in the order indicated in the table.

1	Water hose
2	Oil cooler

5. Use a clean rag to wipe off the mounting surface on the oil filter adapter and the oil cooler.
6. Install in the reverse order of the removal.
7. Refill the engine coolant. (See 01–12B–4 ENGINE COOLANT REPLACEMENT [L3 WITH TC].)
8. Start the engine and confirm that there is no oil leakage.
   - If there is oil leakage, repair or replace the applicable part.
9. Inspect the oil level. (See 01–11B–2 ENGINE OIL LEVEL INSPECTION [L3 WITH TC].)

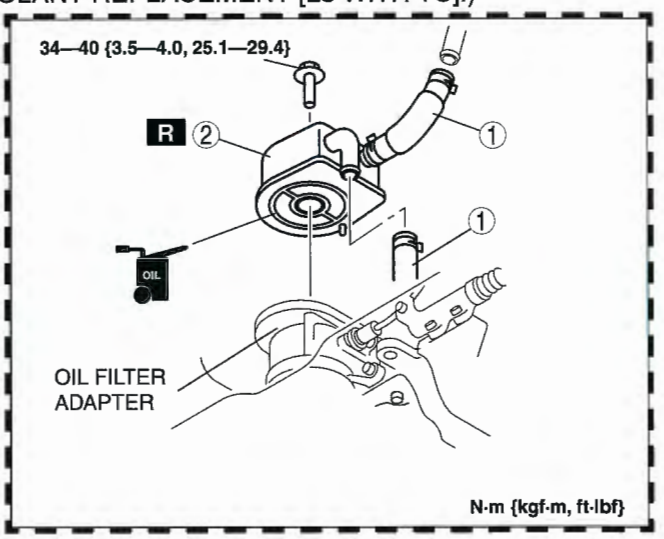

E6U111ZLA002

OIL PAN REMOVAL/INSTALLATION [L3 WITH TC]

E6U011110040W02

Warning

- **Hot engines and engine oil can cause severe burns. Turn off the engine and wait until it and the engine oil have cooled.**
- **A vehicle that is lifted but not securely supported on safety stands is dangerous. It can slip or fall, causing death or serious injury. Never work around or under a lifted vehicle if it is not securely supported on safety stands.**
- **Continuous exposure to USED engine oil has caused skin cancer in laboratory mice. Protect your skin by washing with soap and water immediately after working with engine oil.**

1. Disconnect the negative battery cable.
2. Remove the under cover.
3. Drain the engine oil. (See 01–11B–2 ENGINE OIL REPLACEMENT [L3 WITH TC].)
4. Remove the engine front cover. (See 01–10B–10 TIMING CHAIN REMOVAL/INSTALLATION [L3 WITH TC].)
5. Remove in the order indicated in the table.
6. Install in the reverse order of removal.
7. Refill with the specified type and amount of the engine oil. (See 01–11B–2 ENGINE OIL REPLACEMENT [L3 WITH TC].)
8. Start the engine and confirm that there is no oil leakage.
   - If there is oil leakage, repair or replace the applicable part.

9. Inspect the oil level. (See 01–11B–2 ENGINE OIL LEVEL INSPECTION [L3 WITH TC].)

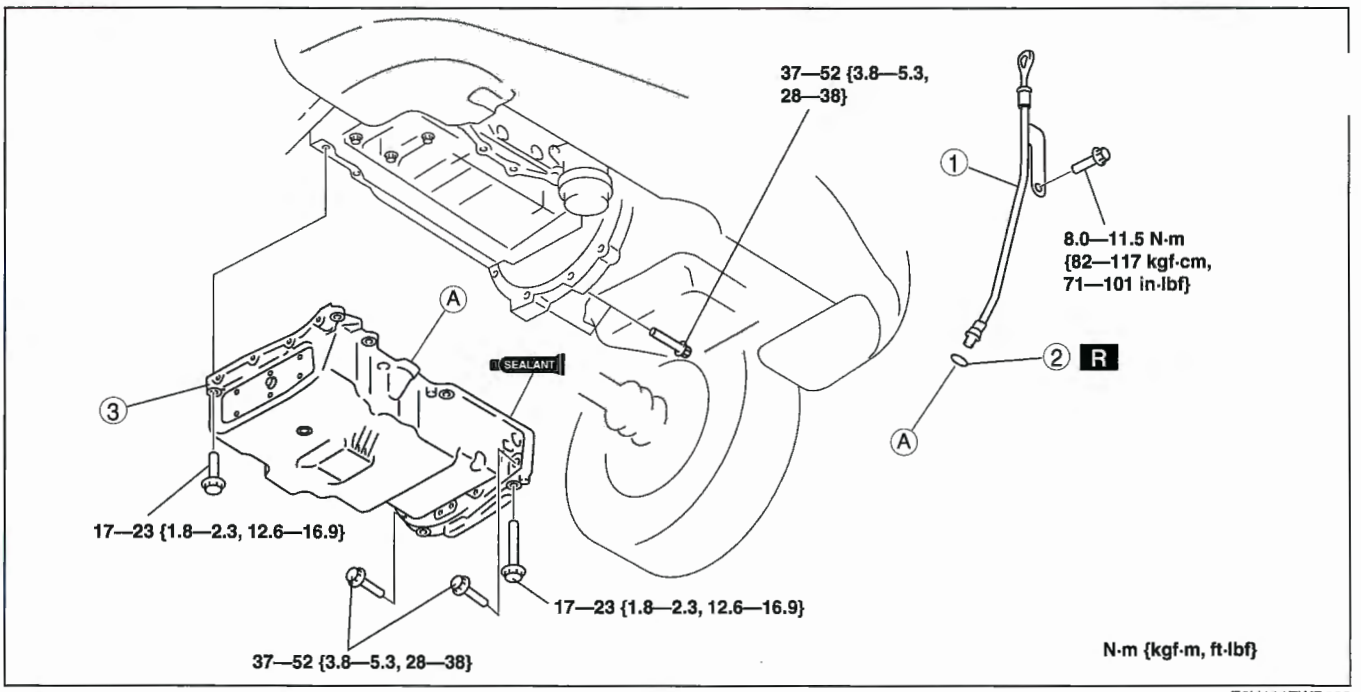

E6U111ZWB003

1	Oil level gauge pipe
2	O-ring

3	Oil pan (See 01–11B–6 Oil Pan Removal Note.) (See 01–11B–6 Oil Pan Installation Note.)

Oil Pan Removal Note

1. Remove the oil pan using the separator tool.

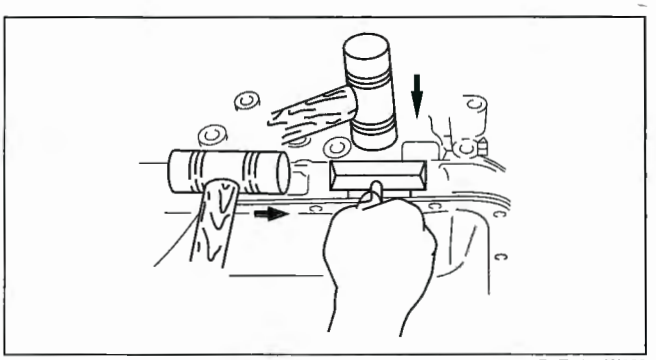

B3E0111W008

Oil Pan Installation Note

Caution

- **Apply the silicon sealant in a single, unbroken line around the whole perimeter.**
- **Using bolts with the old seal adhering could cause cracks in the housing.**

1. Completely clean and remove any oil, dirt, sealant or other foreign material that may be adhering to the housing and oil pan.
2. When reusing the oil pan installation bolts, clean any old sealant from the bolts.

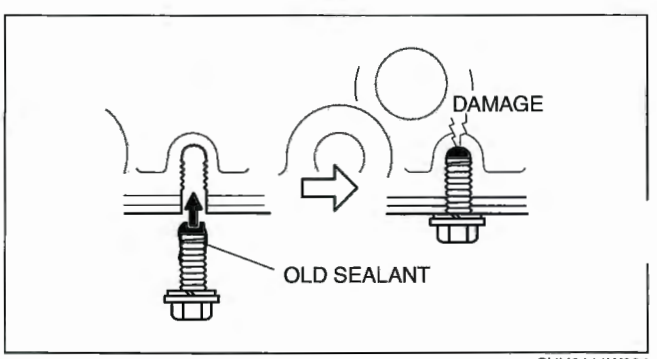

CHU0111W004

3. Use a square ruler to align the oil pan and the cylinder block junction side on the engine front cover side.

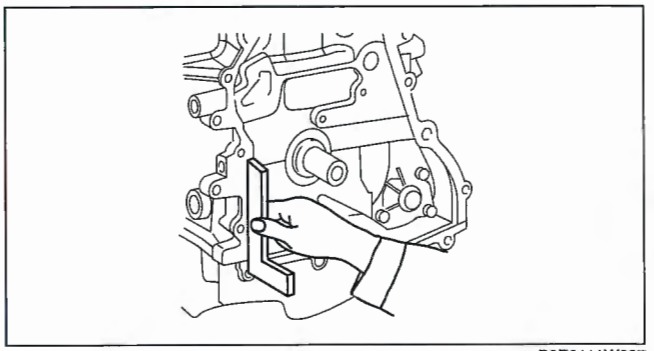

B3E0111W007

4. Apply silicone sealant to the oil pan along the inside of the bolt holes as shown in the figure.

   Thickness
   2.2—3.2 mm {0.087—0.126 in}

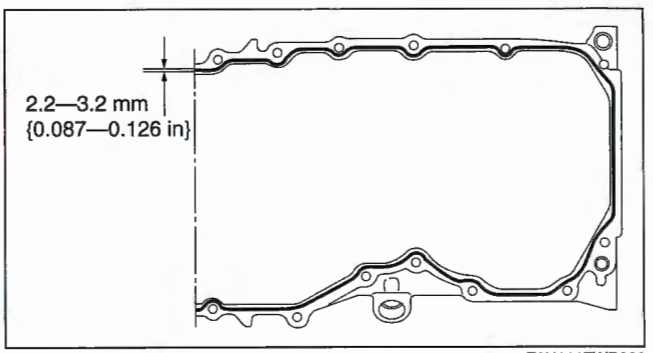

E6U111ZWB006

5. Tighten the bolts in the order shown in the figure.

   Tightening torque
   17—23 N·m {1.8—2.3 kgf·m, 12.6—16.9 ft·lbf}

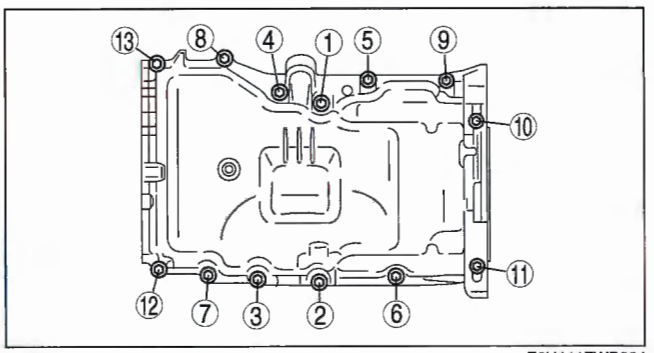

E6U111ZWB004

6. Tighten the oil pan-transaxle installation bolts.

   Tightening torque
   37—52 N·m {3.8—5.3 kgf·m, 28—38 ft·lbf}

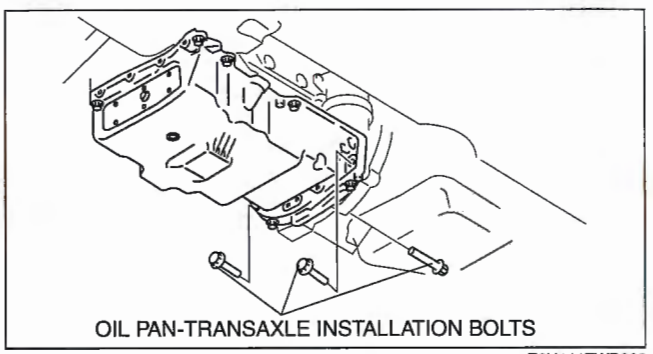

OIL PAN-TRANSAXLE INSTALLATION BOLTS

E6U111ZWB008

OIL PUMP REMOVAL/INSTALLATION [L3 WITH TC]

E6U011114100W01

Warning

- **Hot engines and engine oil can cause severe burns. Turn off the engine and wait until it and the engine oil have cooled.**
- **A vehicle that is lifted but not securely supported on safety stands is dangerous. It can slip or fall, causing death or serious injury. Never work around or under a lifted vehicle if it is not securely supported on safety stands.**
- **Continuous exposure to USED engine oil has caused skin cancer in laboratory mice. Protect your skin by washing with soap and water immediately after working with engine oil.**

1. Disconnect the negative battery cable.
2. Remove the under cover.
3. Drain the engine oil. (See 01–11B–2 ENGINE OIL REPLACEMENT [L3 WITH TC].)
4. Remove the engine front cover. (See 01–10B–10 TIMING CHAIN REMOVAL/INSTALLATION [L3 WITH TC].)
5. Remove the oil pan. (See 01–11B–5 OIL PAN REMOVAL/INSTALLATION [L3 WITH TC].)
6. Remove in the order indicated in the table.
7. Install in the reverse order of removal.
8. Refill with the specified type and amount of the engine oil. (See 01–11B–2 ENGINE OIL REPLACEMENT [L3 WITH TC].)
9. Start the engine and confirm that there is no oil leakage.
   - If there is oil leakage, repair or replace the applicable part.
10. Inspect the oil level. (See 01–11B–2 ENGINE OIL LEVEL INSPECTION [L3 WITH TC].)
11. Inspect the oil pressure. (See 01–11B–3 OIL PRESSURE INSPECTION [L3 WITH TC].)

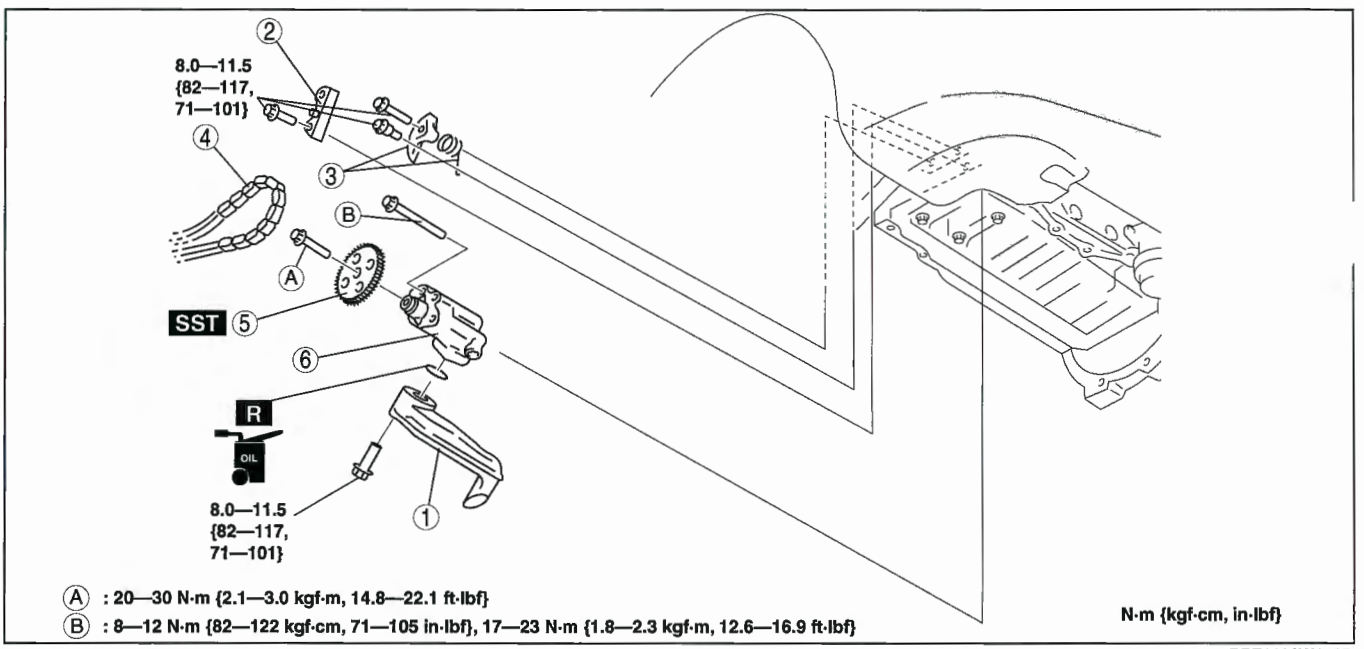

DPE111AW1005

1	Oil strainer
2	Oil pump chain guide
3	Oil pump chain tensioner
4	Oil pump chain

5	Oil pump sprocket (See 01–11B–9 Oil Pump Sprocket Removal/ Installation Note.)
6	Oil pump (See 01–11B–9 Oil Pump Installation Note.)

Oil Pump Sprocket Removal/Installation Note

1. Install the **SST** to the oil pump sprocket to stop the oil pump from rotating.

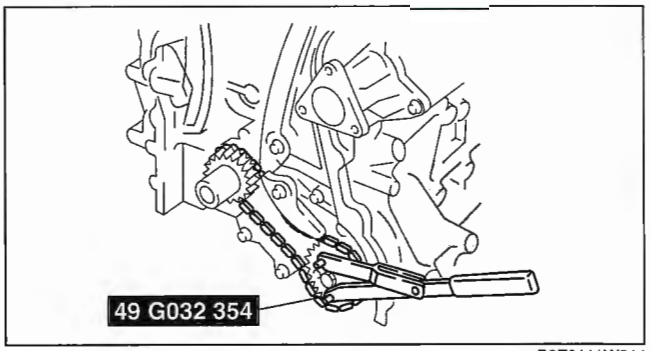

B3E0111W014

Oil Pump Installation Note

1. Tighten the oil pump bolts in two steps in the order shown in the figure.

Tightening torque
Step 1: 8—12 N·m {82—122 kgf·cm, 71—105 in·lbf}
Step 2: 17—23 N·m {1.8—2.3 kgf·m, 12.6—16.9 ft·lbf}

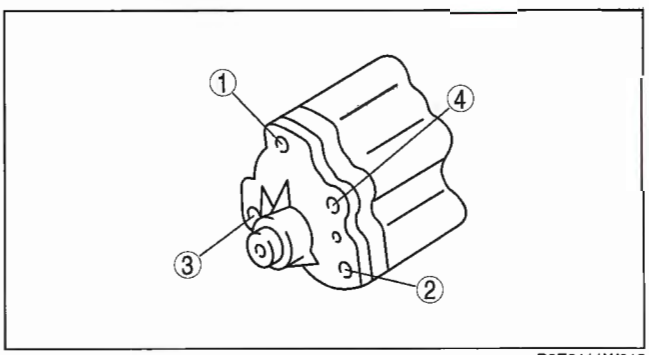

B3E0111W015

01–12A COOLING SYSTEM [L3, AJ]

COOLING SYSTEM LOCATION INDEX [L3, AJ] 01–12A–2
COOLING SYSTEM SERVICE WARNINGS [L3, AJ] 01–12A–3
ENGINE COOLANT LEVEL INSPECTION [L3, AJ] 01–12A–3
ENGINE COOLANT PROTECTION INSPECTION [L3, AJ] 01–12A–4
ENGINE COOLANT REPLACEMENT [L3, AJ] 01–12A–5
ENGINE COOLANT LEAKAGE INSPECTION [L3, AJ] 01–12A–7
COOLING SYSTEM CAP INSPECTION [L3, AJ] 01–12A–7
RADIATOR REMOVAL/INSTALLATION [L3, AJ] 01–12A–8
THERMOSTAT REMOVAL/INSTALLATION [L3, AJ] 01–12A–9
L3 ..... 01–12A–9
AJ 01–12A–9
Thermostat Installation Note (AJ) 01–12A–10
THERMOSTAT INSPECTION [L3, AJ] 01–12A–10
WATER PUMP REMOVAL/INSTALLATION [L3, AJ] 01–12A–10
L3 ..... 01–12A–10
AJ 01–12A–11
Water Pump Installation Note (AJ) 01–12A–11
COOLING FAN REMOVAL/INSTALLATION [L3, AJ] 01–12A–12
L3 ..... 01–12A–12
AJ 01–12A–13
COOLING FAN MOTOR INSPECTION [L3, AJ] 01–12A–14
L3 ..... 01–12A–14
AJ 01–12A–15
FAN CONTROL MODULE INSPECTION [AJ] 01–12A–15

COOLING SYSTEM LOCATION INDEX [L3, AJ]

E6U011200000W01

L3

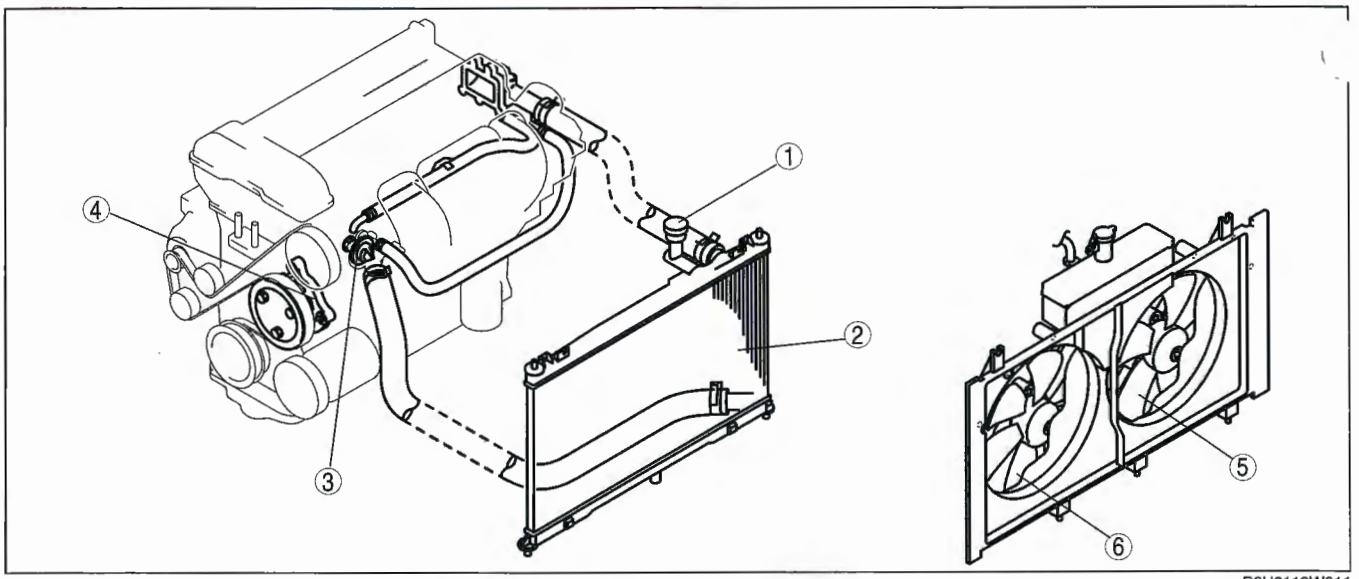

B6U0112W011

1	Cooling system cap (See 01–12A–7 COOLING SYSTEM CAP INSPECTION [L3, AJ].)
2	Radiator (See 01–12A–8 RADIATOR REMOVAL/ INSTALLATION [L3, AJ].)
3	Thermostat (See 01–12A–9 THERMOSTAT REMOVAL/ INSTALLATION [L3, AJ].) (See 01–12A–10 THERMOSTAT INSPECTION [L3, AJ].)
4	Water pump (See 01–12A–10 WATER PUMP REMOVAL/ INSTALLATION [L3, AJ].)
5	Cooling fan No.1 (See 01–12A–12 COOLING FAN REMOVAL/ INSTALLATION [L3, AJ].) (See 01–12A–14 COOLING FAN MOTOR INSPECTION [L3, AJ].)
6	Cooling fan No.2 (See 01–12A–12 COOLING FAN REMOVAL/ INSTALLATION [L3, AJ].) (See 01–12A–14 COOLING FAN MOTOR INSPECTION [L3, AJ].)

AJ

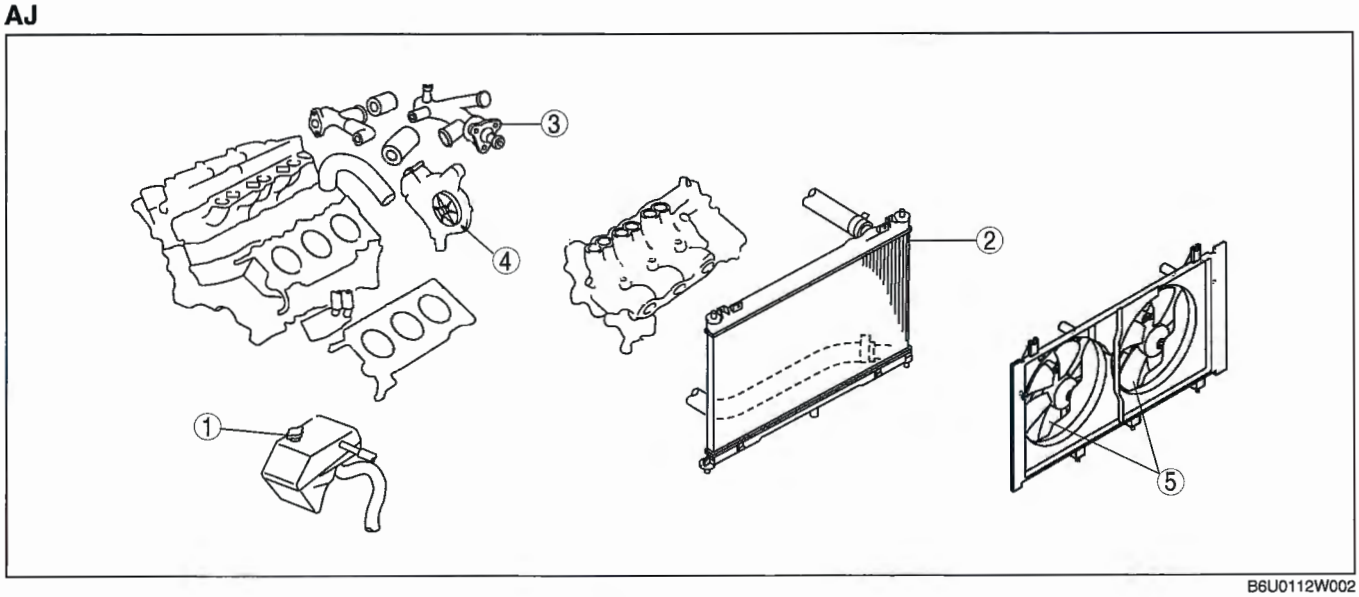

B6U0112W002

1	Cooling system cap (See 01–12A–7 COOLING SYSTEM CAP INSPECTION [L3, AJ].)
2	Radiator (See 01–12A–8 RADIATOR REMOVAL/ INSTALLATION [L3, AJ].)

3	Thermostat (See 01–12A–9 THERMOSTAT REMOVAL/ INSTALLATION [L3, AJ].) (See 01–12A–10 THERMOSTAT INSPECTION [L3, AJ].)
4	Water pump (See 01–12A–10 WATER PUMP REMOVAL/ INSTALLATION [L3, AJ].)
5	Cooling fan (See 01–12A–12 COOLING FAN REMOVAL/ INSTALLATION [L3, AJ].) (See 01–12A–14 COOLING FAN MOTOR INSPECTION [L3, AJ].) (See 01–12A–15 FAN CONTROL MODULE INSPECTION [AJ].)

COOLING SYSTEM SERVICE WARNINGS [L3, AJ]

E6U011200000W02

Warning

- **Never remove the cooling system cap or loosen the radiator drain plug while the engine is running, or when the engine and radiator are hot. Scalding engine coolant and steam may shoot out and cause serious injury. It may also damage the engine and cooling system.**
- **Turn off the engine and wait until it has cooled. Even then, be very careful when removing the cap. Wrap a thick cloth around it and slowly turn it counterclockwise to the first stop. Step back while the pressure escapes. (L3)**
- **When you are sure all the pressure is gone, press down on the cap using the cloth, turn it, and remove it. (L3)**
- **Turn off the engine and wait until it has cooled. Even then, be very careful when removing the cap. Wrap a thick cloth around it and slowly turn it counterclockwise 2.5 turns. Step back while the pressure escapes. (AJ)**
- **When you are sure all the pressure is gone, turn the cap using the cloth, and remove it. (AJ)**

ENGINE COOLANT LEVEL INSPECTION [L3, AJ]

E6U011215001W01

Warning

- **Never remove the cooling system cap or loosen the radiator drain plug while the engine is running, or when the engine and radiator are hot. Scalding engine coolant and steam may shoot out and cause serious injury. It may also damage the engine and cooling system.**
- **Turn off the engine and wait until it has cooled. Even then, be very careful when removing the cap. Wrap a thick cloth around it and slowly turn it counterclockwise to the first stop. Step back while the pressure escapes. (L3)**
- **When you are sure all the pressure is gone, press down on the cap using the cloth, turn it, and remove it. (L3)**
- **Turn off the engine and wait until it has cooled. Even then, be very careful when removing the cap. Wrap a thick cloth around it and slowly turn it counterclockwise 2.5 turns. Step back while the pressure escapes. (AJ)**
- **When you are sure all the pressure is gone, turn the cap using the cloth, and remove it. (AJ)**

Note

- If the "FL22" mark is shown on or near the cooling system cap, use FL22 type engine coolant.
- FL22 type engine coolant is shipped as a diluted solution (55% coolant, 45% water). Use the solution as is when replacing coolant.

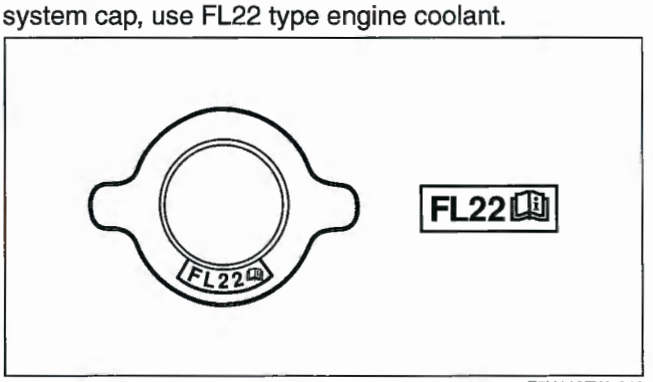

E5U112ZW5010

1. Verify that the engine coolant level in the engine coolant reserve tank is between the F and L marks.
   - If the engine coolant level is below L, remove the cooling system cap and add engine coolant. (See 01–12A–5 ENGINE COOLANT REPLACEMENT [L3, AJ].)

L3

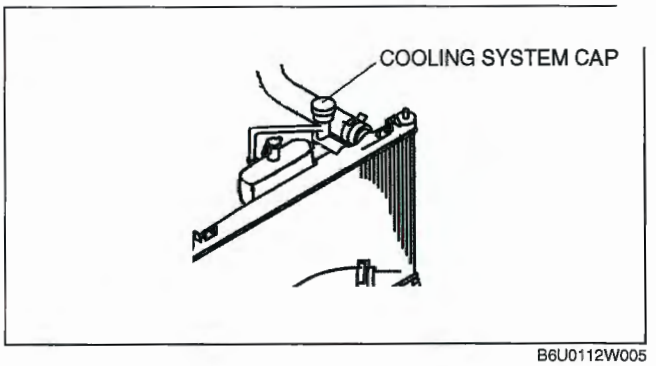

B6U0112W005

AJ

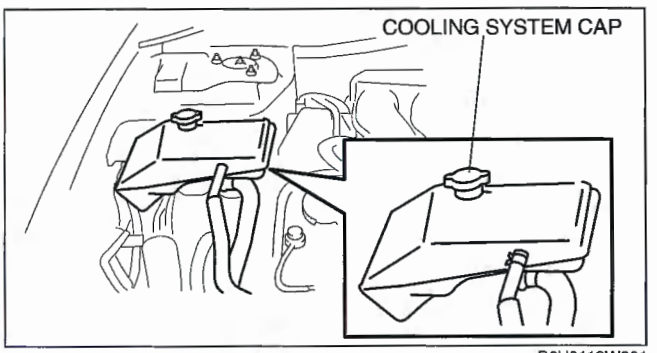

B6U0112W001

ENGINE COOLANT PROTECTION INSPECTION [L3, AJ]

E6U011215001W

1. Measure the engine coolant temperature and specific gravity with a thermometer and a hydrometer.

Caution

- **Use engine coolant at a concentration that meets the environmental conditions in which the vehicle is driven, otherwise engine damage could occur.**
- **The engine has aluminum parts and must be protected by an ethylene-glycol-based coolant to prevent corrosion and freezing.**
- **Do not use coolants containing Alcohol, Methanol, Borate or Silicate. These coolants could damage the cooling system.**
- **Use only soft (demineralized) water in the coolant mixture. Water that contains minerals will cut down on the coolant's effectiveness.**
- **Engine coolant damages paint. If engine coolant does get on a painted surface, rinse it off quickly.**

Note

- If the "FL22" mark is shown on or near the cooling system cap, use FL22 type engine coolant.
- FL22 type engine coolant is shipped as a diluted solution (55% coolant, 45% water). Use the solution as is when replacing coolant.

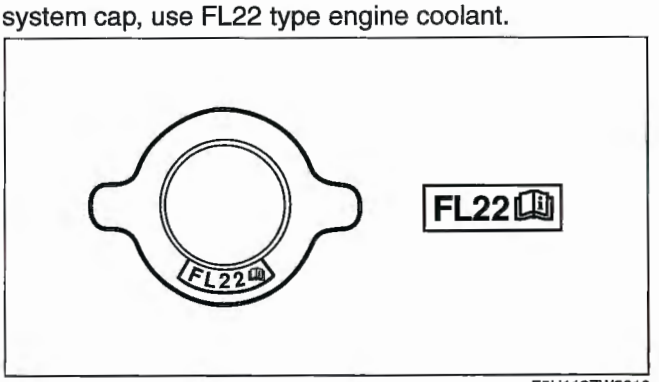

E5U112ZW501

2. Determine the engine coolant protection by referring to the graph shown.
   - If the engine coolant protection is not proper, add water or engine coolant.

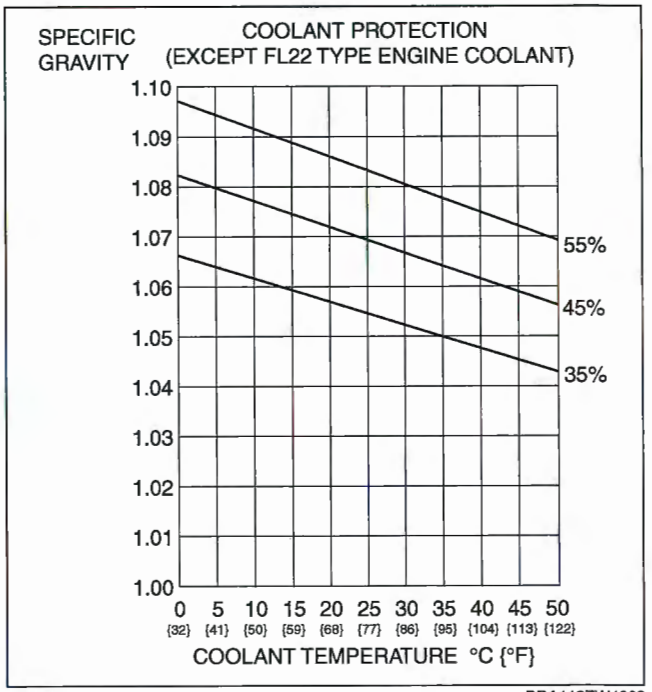

DDA112ZW4003

ENGINE COOLANT REPLACEMENT [L3, AJ]

E6U011215001W03

Warning

- **Never remove the cooling system cap or loosen the radiator drain plug while the engine is running, or when the engine and radiator are hot. Scalding engine coolant and steam may shoot out and cause serious injury. It may also damage the engine and cooling system.**
- **Turn off the engine and wait until it has cooled. Even then, be very careful when removing the cap. Wrap a thick cloth around it and slowly turn it counterclockwise to the first stop. Step back while the pressure escapes. (L3)**
- **When you are sure all the pressure is gone, press down on the cap using the cloth, turn it, and remove it. (L3)**
- **Turn off the engine and wait until it has cooled. Even then, be very careful when removing the cap. Wrap a thick cloth around it and slowly turn it counterclockwise 2.5 turns. Step back while the pressure escapes. (AJ)**
- **When you are sure all the pressure is gone, turn the cap using the cloth, and remove it. (AJ)**

Caution

- **Use engine coolant at a concentration that meets the environmental conditions in which the vehicle is driven, otherwise engine damage could occur.**
- **The engine has aluminum parts and must be protected by an ethylene-glycol-based coolant to prevent corrosion and freezing.**
- **Do not use coolants containing Alcohol, Methanol, Borate or Silicate. These coolants could damage the cooling system.**
- **Use only soft (demineralized) water in the coolant mixture. Water that contains minerals will cut down on the coolant's effectiveness.**
- **Engine coolant damages paint. If engine coolant does get on a painted surface, rinse it off quickly.**

Note

- If the "FL22" mark is shown on or near the cooling system cap, use FL22 type engine coolant.
- FL22 type engine coolant is shipped as a diluted solution (55% coolant, 45% water). Use the solution as is when replacing coolant.

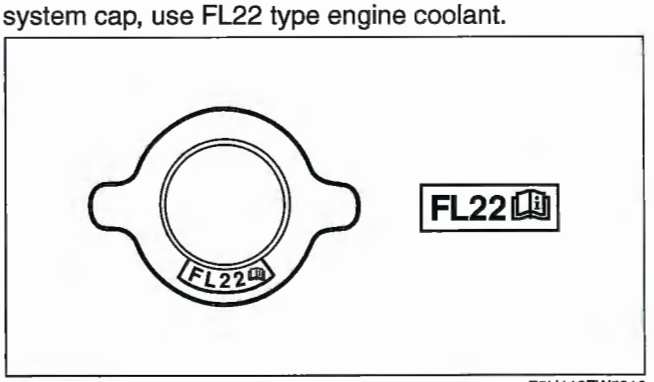

E5U112ZW5010

1. Remove the cooling system cap and the radiator drain plug.
2. Drain the engine coolant into a container.
3. Flush the cooling system with water until all traces of color are gone.
4. Let the system drain completely.
5. Tighten the radiator drain plug.
6. Referring to the following chart, select proper volume percentage of the water and engine coolant.

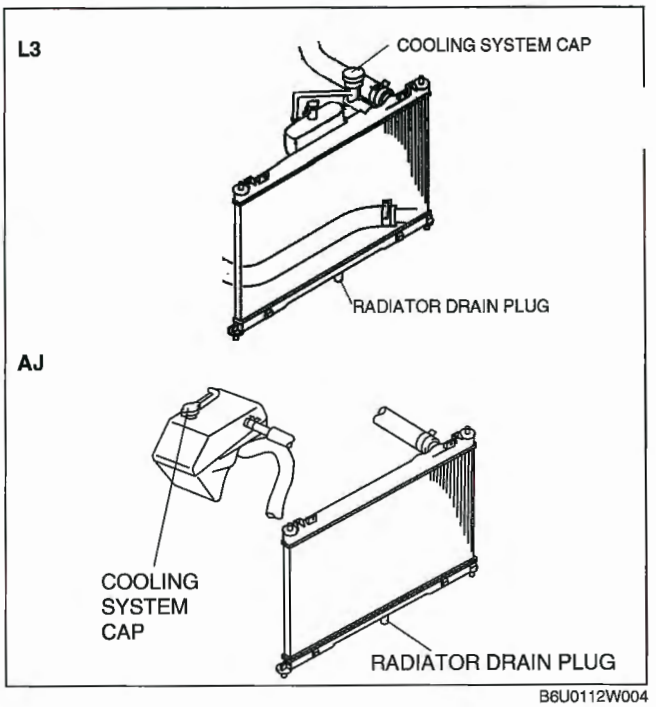

B6U0112W004

Antifreeze solution mixture percentage (Except FL22 type engine coolant)

Engine coolant protection	Volume percentage (%)		Gravity at 20 °C {68 °F}
	Water	Coolant	
Above -16 °C {3 °F}	65	35	1.057
Above -26 °C {-15 °F}	55	45	1.072
Above -40 °C {-40 °F}	45	55	1.086

7. Slowly pour the engine coolant into the radiator up to the engine coolant filler port. (L3 engine model)
8. Fill the engine coolant into the engine coolant reserve tank up to the F mark on the engine coolant reserve tank.
9. Tighten the cooling system cap.

Caution
- **If the water temperature gauge rises too high, stop the engine and decrease the water temperature to prevent overheating. Then, verify the malfunctioning part and repair or replace it.**
- **If the engine coolant level in the coolant reserve tank is below the L mark during engine coolant air bleeding operation, stop the engine, and after the engine coolant temperature decreases, add engine coolant. Then, resume the engine coolant air bleeding operation.**

10. Start the engine and idle it until the cooling fan operates.
11. After engine warms up, perform the following steps.
    (1) Run the engine at **2,500 rpm** for **5 min**.
    (2) Run the engine at **3,000 rpm** for **5 s**, then idle.
    (3) Repeat steps (2) several times.
    (4) Idle the engine for **1 min**.
12. Stop the engine and wait until it is cool.
13. Inspect the engine coolant level.
    - If it is low, repeat Steps 7—13 (L3 engine model), Steps 8—13 (AJ engine model).
14. Install the cooling system cap.
15. Inspect for engine coolant leakage. (See 01–12A–7 ENGINE COOLANT LEAKAGE INSPECTION [L3, AJ].)

ENGINE COOLANT LEAKAGE INSPECTION [L3, AJ]

E6U011215001W04

Warning

- **Never remove the cooling system cap or loosen the radiator drain plug while the engine is running, or when the engine and radiator are hot. Scalding engine coolant and steam may shoot out and cause serious injury. It may also damage the engine and cooling system.**
- **Turn off the engine and wait until it has cooled. Even then, be very careful when removing the cap. Wrap a thick cloth around it and slowly turn it counterclockwise to the first stop. Step back while the pressure escapes. (L3)**
- **When you are sure all the pressure is gone, press down on the cap using the cloth, turn it, and remove it. (L3)**
- **Turn off the engine and wait until it has cooled. Even then, be very careful when removing the cap. Wrap a thick cloth around it and slowly turn it counterclockwise 2.5 turns. Step back while the pressure escapes. (AJ)**
- **When you are sure all the pressure is gone, turn the cap using the cloth, and remove it. (AJ)**

1. Inspect the engine coolant level. (See 01–12A–3 ENGINE COOLANT LEVEL INSPECTION [L3, AJ].)
2. Remove the cooling system cap.
3. Clean the installation parts of the cooling system cap.
4. Install the **SST** and a radiator cap tester (L3 engine model), commercially available radiator cap tester (AJ engine model) to the engine coolant filler port.
5. Apply pressure using the radiator cap tester.

Caution

- **Applying more than 127 kPa {1.3 kgf/cm^2, 18 psi} (L3 engine model), 107.9 kPa {1.1 kgf/cm^2, 15.6 psi} (AJ engine model) can damage the hoses, fittings, and other components, and cause leakage.**

Pressure

L3: 127 kPa {1.3 kgf/cm^2, 18 psi}
AJ: 107.9 kPa {1.1 kgf/cm^2, 15.6 psi}

6. When pressurizing the cooling system, verify that the pressure is maintained.
   - If the gauge needle drops, it may indicate water leakage. Repair or replace the applicable part.

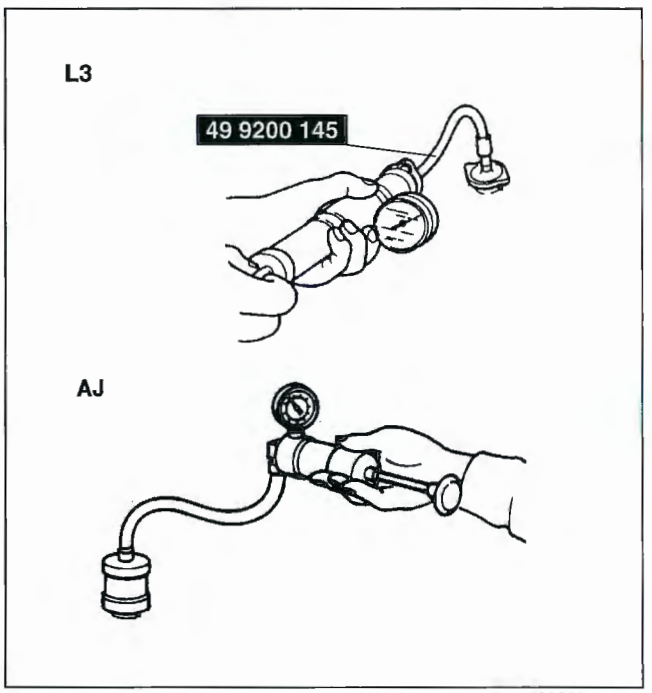

A6A3612W202

COOLING SYSTEM CAP INSPECTION [L3, AJ]

E6U011215201W01

Warning

- **Never remove the cooling system cap or loosen the radiator drain plug while the engine is running, or when the engine and radiator are hot. Scalding engine coolant and steam may shoot out and cause serious injury. It may also damage the engine and cooling system.**
- **Turn off the engine and wait until it has cooled. Even then, be very careful when removing the cap. Wrap a thick cloth around it and slowly turn it counterclockwise to the first stop. Step back while the pressure escapes. (L3)**
- **When you are sure all the pressure is gone, press down on the cap using the cloth, turn it, and remove it. (L3)**
- **Turn off the engine and wait until it has cooled. Even then, be very careful when removing the cap. Wrap a thick cloth around it and slowly turn it counterclockwise 2.5 turns. Step back while the pressure escapes. (AJ)**
- **When you are sure all the pressure is gone, turn the cap using the cloth, and remove it. (AJ)**

1. Clean the cooling system cap and the sealed part.
2. Inspect the crack or turn over on the sealed part of the cooling system cap.
   - If not as specified, replace the cooling system cap.

3. Fill the **SST** (L3 engine model), commercially available radiator cap tester (AJ engine model) with the water or the engine coolant to the full level and attach the cooling system cap to the **SST** (L3 engine model), radiator cap tester (AJ engine model).
4. Hold the cooling system cap downward and apply pressure gradually. Verify that the pressure become held for **10 s** within the specification.
   - If the pressure is not held stable within the specification, replace the cooling system cap.

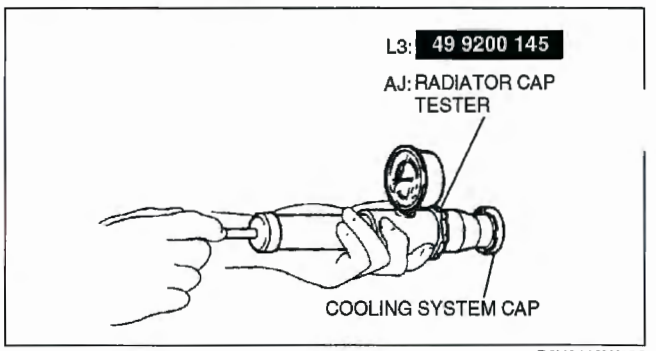

B6U0112W050

Pressure
L3: 113—142 kPa {1.15—1.44 kgf/cm^2, 16.4—20.4 psi}
AJ: 94—122 kPa {0.95—1.25 kgf/cm^2, 13.6—17.7 psi}

RADIATOR REMOVAL/INSTALLATION [L3, AJ]

E6U011215200W01

1. Disconnect the negative battery cable.
2. Drain the engine coolant. (See 01–12A–5 ENGINE COOLANT REPLACEMENT [L3, AJ].)
3. Remove the air cleaner. (See L3: 01–13A–4 INTAKE AIR SYSTEM REMOVAL/INSTALLATION [L3], AJ: 01–13C–2 INTAKE AIR SYSTEM REMOVAL/INSTALLATION [AJ].)
4. Remove the shroud panel. (See 09–10–17 SHROUD PANEL REMOVAL/INSTALLATION.)
5. Remove the cooling fan. (See 01–12A–12 COOLING FAN REMOVAL/INSTALLATION [L3, AJ].)
6. Disconnect the upper radiator hose from the radiator. (L3 engine model)
7. Disconnect the oil hose from the radiator. (ATX)
8. Remove the engine coolant reserve hose. (AJ engine model)
9. Remove in the order indicated in the table.
10. Install in the reverse order of the removal.
11. Add the engine coolant. (See 01–12A–5 ENGINE COOLANT REPLACEMENT [L3, AJ].)
12. Inspect for engine coolant leakage. (01–12A–7 ENGINE COOLANT LEAKAGE INSPECTION [L3, AJ].)
13. Inspect the ATF level. (ATX) (See 05–17A–10 AUTOMATIC TRANSAXLE FLUID (ATF) INSPECTION [FS5A-EL].) (See 05–17B–11 AUTOMATIC TRANSAXLE FLUID (ATF) INSPECTION [AW6A-EL].)

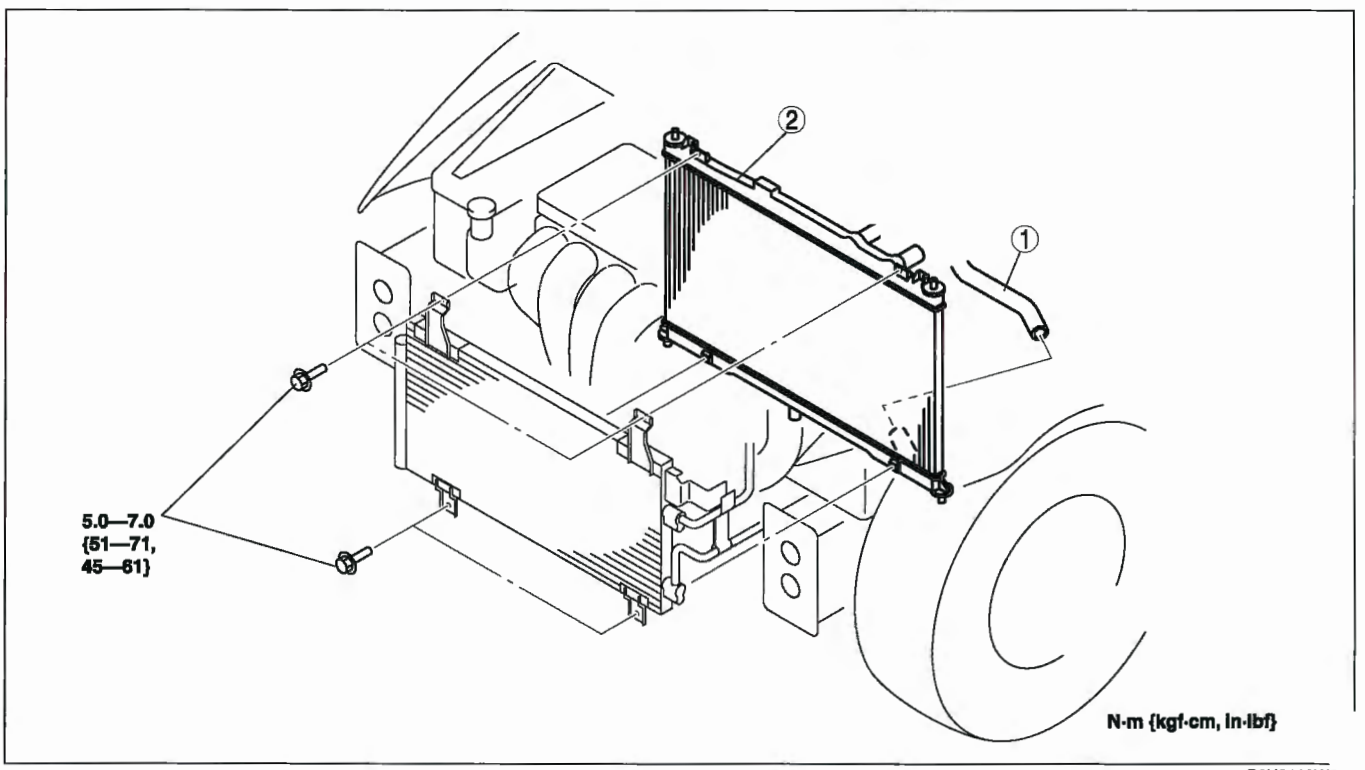

B6U0112W0∪∪

1	Lower radiator hose	2	Radiator

THERMOSTAT REMOVAL/INSTALLATION [L3, AJ]

E6U011215171W01

L3

1. Disconnect the negative battery cable.
   Drain the engine coolant. (See 01–12A–5 ENGINE COOLANT REPLACEMENT [L3, AJ].)
2. Remove the drive belt. (See 01–10A–3 DRIVE BELT REPLACEMENT [L3].)
3. Remove the P/S oil pump with hoses and pipe still connected. Position the P/S oil pump out of the way. (See 06–12–27 POWER STEERING OIL PUMP REMOVAL/INSTALLATION [L3, L3 WITH TC].)
4. Remove in the order indicated in the table.
5. Install in the reverse order of removal.
6. Add the engine coolant. (See 01–12A–5 ENGINE COOLANT REPLACEMENT [L3, AJ].)
7. Inspect the engine coolant leakage. (See 01–12A–7 ENGINE COOLANT LEAKAGE INSPECTION [L3, AJ].)

1	Water hose
2	Lower radiator hose
3	Thermostat
4	Gasket

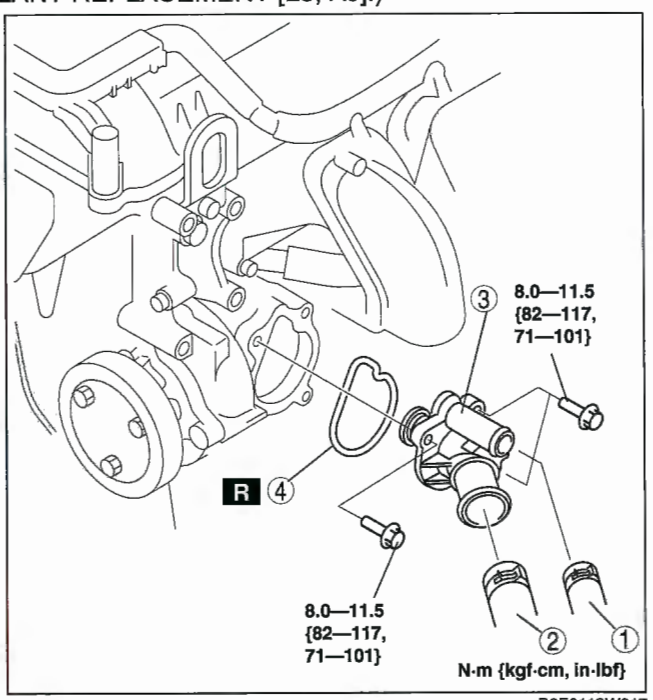

B3E0112W017

AJ

1. Disconnect the negative battery cable.
2. Remove the air cleaner. (See 01–13C–2 INTAKE AIR SYSTEM REMOVAL/INSTALLATION [AJ].)
3. Drain the engine coolant. (See 01–12A–5 ENGINE COOLANT REPLACEMENT [L3, AJ].)
4. Remove in the order indicated in the table.
5. Install in the reverse order of removal.
6. Add the engine coolant. (See 01–12A–5 ENGINE COOLANT REPLACEMENT [L3, AJ].)
7. Inspect the engine coolant leakage. (See 01–12A–7 ENGINE COOLANT LEAKAGE INSPECTION [L3, AJ].)

1	Upper radiator hose
2	Lower radiator hose
3	Thermostat cover
4	O-ring
5	Thermostat (See 01–12A–10 Thermostat Installation Note (AJ).)

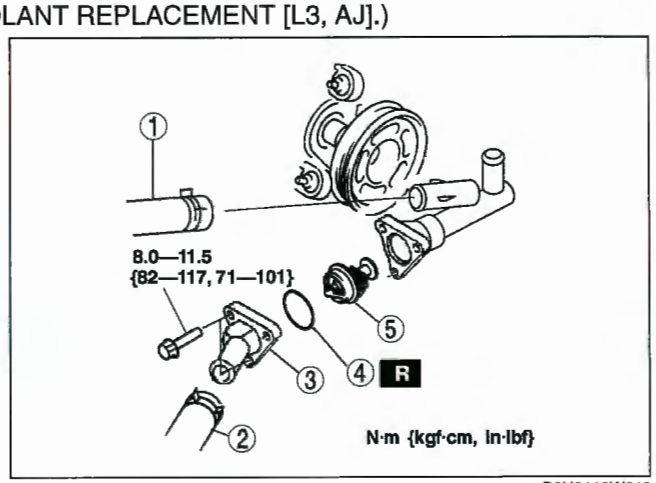

B6U0112W010

Thermostat Installation Note (AJ)

1. Install the thermostat into the thermostat case with the jiggle pin at the top.

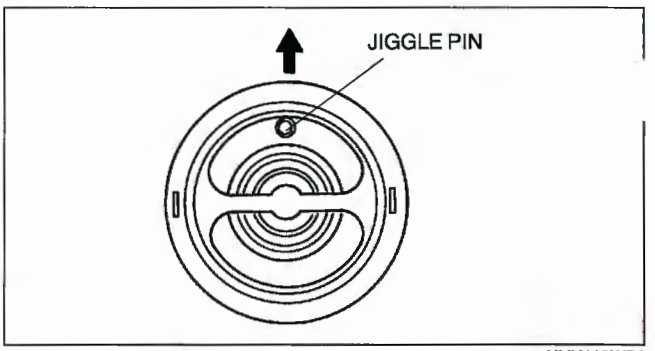

YMU112WB2

THERMOSTAT INSPECTION [L3, AJ]

E6U011215171W02

1. Visually inspect that the thermostat valve is closed.
2. Place the thermostat and a thermometer in water.

Warning

- **During inspection, the thermostat and water are extremely hot and can cause severe burns. Do not touch the thermostat and water directly.**

3. Heat the water and inspect the following.
   - If not as specified, replace the thermostat.

Condition	Engine	
	L3	AJ
Initial-opening temperature (°C {°F})	80—84 {176—183}	84—88 {184—190}
Full-open temperature (°C {°F})	97 {206}	99 {210}
Full-open lift (mm {in})	More than 8.0 {0.31}	More than 7.3 {0.29}

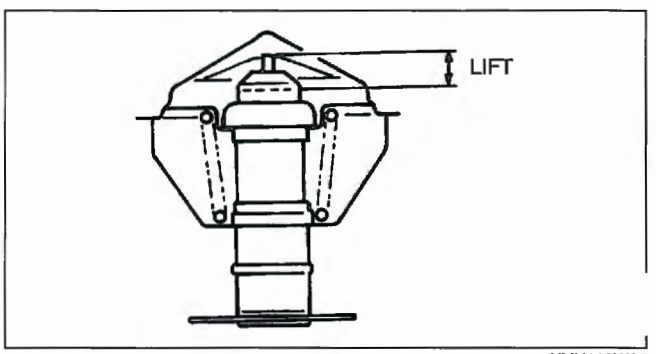

YMU112WA7

WATER PUMP REMOVAL/INSTALLATION [L3, AJ]

E6U011215010W01

L3

1. Disconnect the negative battery cable.
2. Drain the engine coolant. (See 01–12A–5 ENGINE COOLANT REPLACEMENT [L3, AJ].)
3. Remove the drive belt. (See 01–10A–3 DRIVE BELT REPLACEMENT [L3].)
4. Remove in the order indicated in the table.
5. Install in the reverse order of removal.
6. Add the engine coolant. (See 01–12A–5 ENGINE COOLANT REPLACEMENT [L3, AJ].)

1	Water pump pulley
2	Water pump
3	O-ring

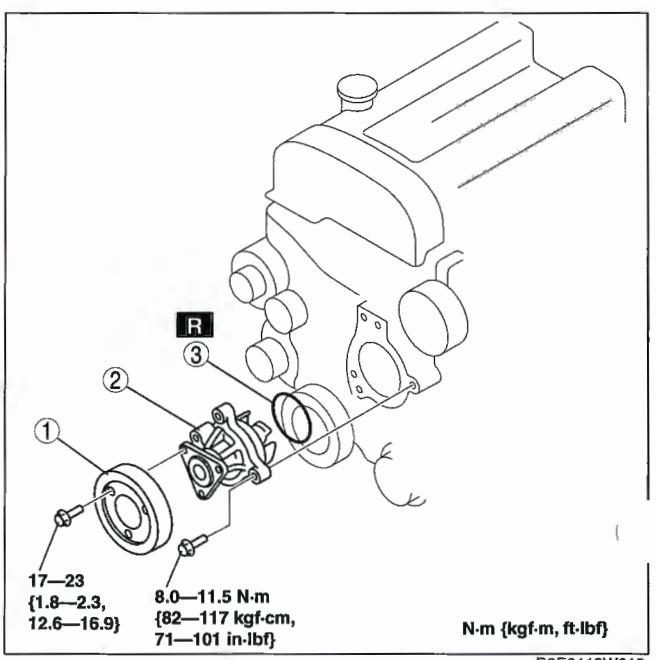

B3E0112W015

AJ

1. Disconnect the negative battery cable.
2. Remove the under cover.
   Remove the air cleaner. (See 01–13C–2 INTAKE AIR SYSTEM REMOVAL/INSTALLATION [AJ].)
   . Drain the engine coolant. (See 01–12A–5 ENGINE COOLANT REPLACEMENT [L3, AJ].)
5. Remove the water pump drive belt pulley. (See 01–10C–9 Water Pump Drive Belt Pulley Removal Note.)
6. Remove in the order indicated in the table.
7. Install in the reverse order of removal.
8. Install the new water pump drive belt pulley. (See 01–10C–24 Water Pump Drive Belt Pulley Installation Note.)
9. Add the engine coolant. (See 01–12A–5 ENGINE COOLANT REPLACEMENT [L3, AJ].)

1	Thermostat case
2	Heater hose
3	Water outlet pipe
4	Water pump (See 01–12A–11 Water Pump Installation Note (AJ).)

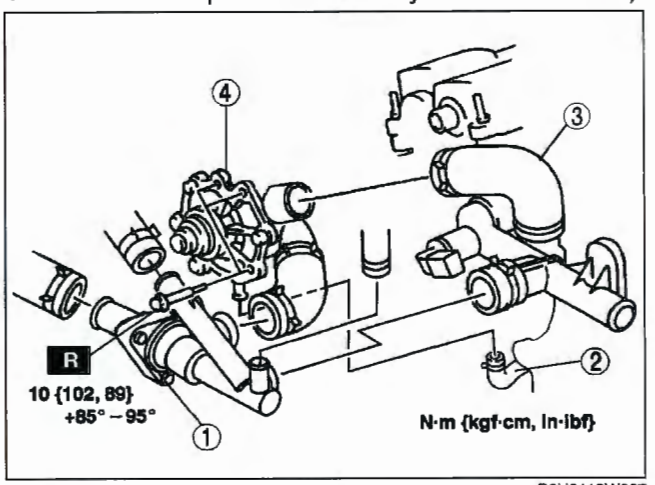

B6U0112W007

Water Pump Installation Note (AJ)

1. Tighten the bolts to the specified torque, then tighten them further **85°—95°**.

Tightening torque
10 N·m {102 kgf·cm, 89 in·lbf}

COOLING FAN REMOVAL/INSTALLATION [L3, AJ]

E6U011215025W01

L3

1. Disconnect the negative battery cable.
2. Remove the shroud panel. (See 09–10–17 SHROUD PANEL REMOVAL/INSTALLATION.)
3. Remove the cooler pipe stay. (See 07–11–17 CONDENSER REMOVAL/INSTALLATION [L3, AJ].)
4. Remove the oil hose stay. (ATX)
5. Remove in the order indicated in the table.
6. Install in the reverse order of removal.

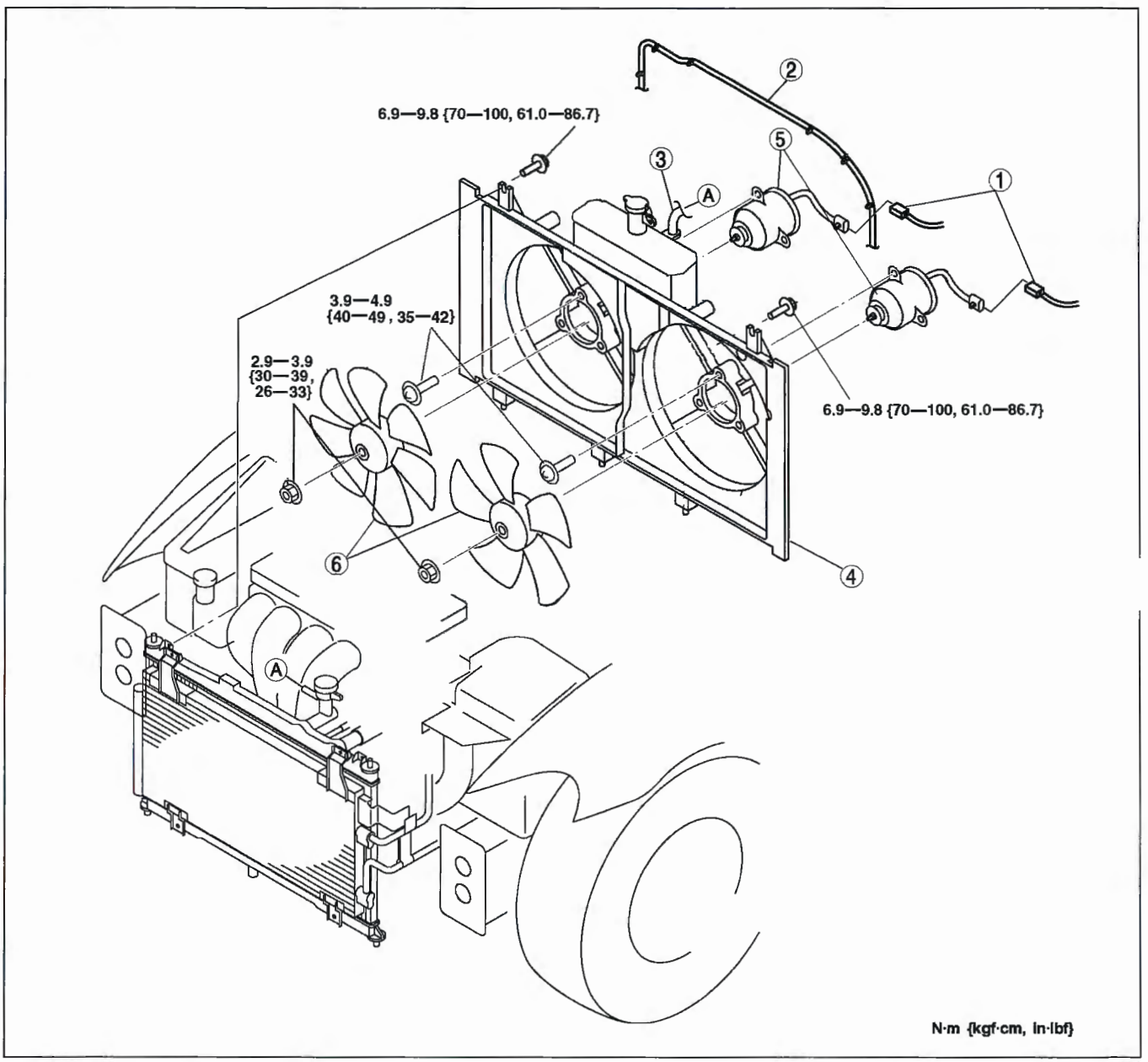

E6U112ZW5001

1	Cooling fan motor connector
2	Cooling fan wiring harness
3	Engine coolant reserve hose

4	Cooling fan component
5	Cooling fan motor
6	Cooling fan blades

AJ

1. Disconnect the negative battery cable.
2. Drain the engine coolant. (See 01–12A–5 ENGINE COOLANT REPLACEMENT [L3, AJ].)
   Remove the shroud panel. (See 09–10–17 SHROUD PANEL REMOVAL/INSTALLATION.)
   . Remove the cooler pipe stay. (See 07–11–17 CONDENSER REMOVAL/INSTALLATION [L3, AJ].)
5. Remove the oil hose stay. (ATX)
6. Disconnect the engine coolant reserve hose from the radiator.
7. Remove in the order indicated in the table.
8. Install in the reverse order of removal.
9. Add the engine coolant. (See 01–12A–5 ENGINE COOLANT REPLACEMENT [L3, AJ].)

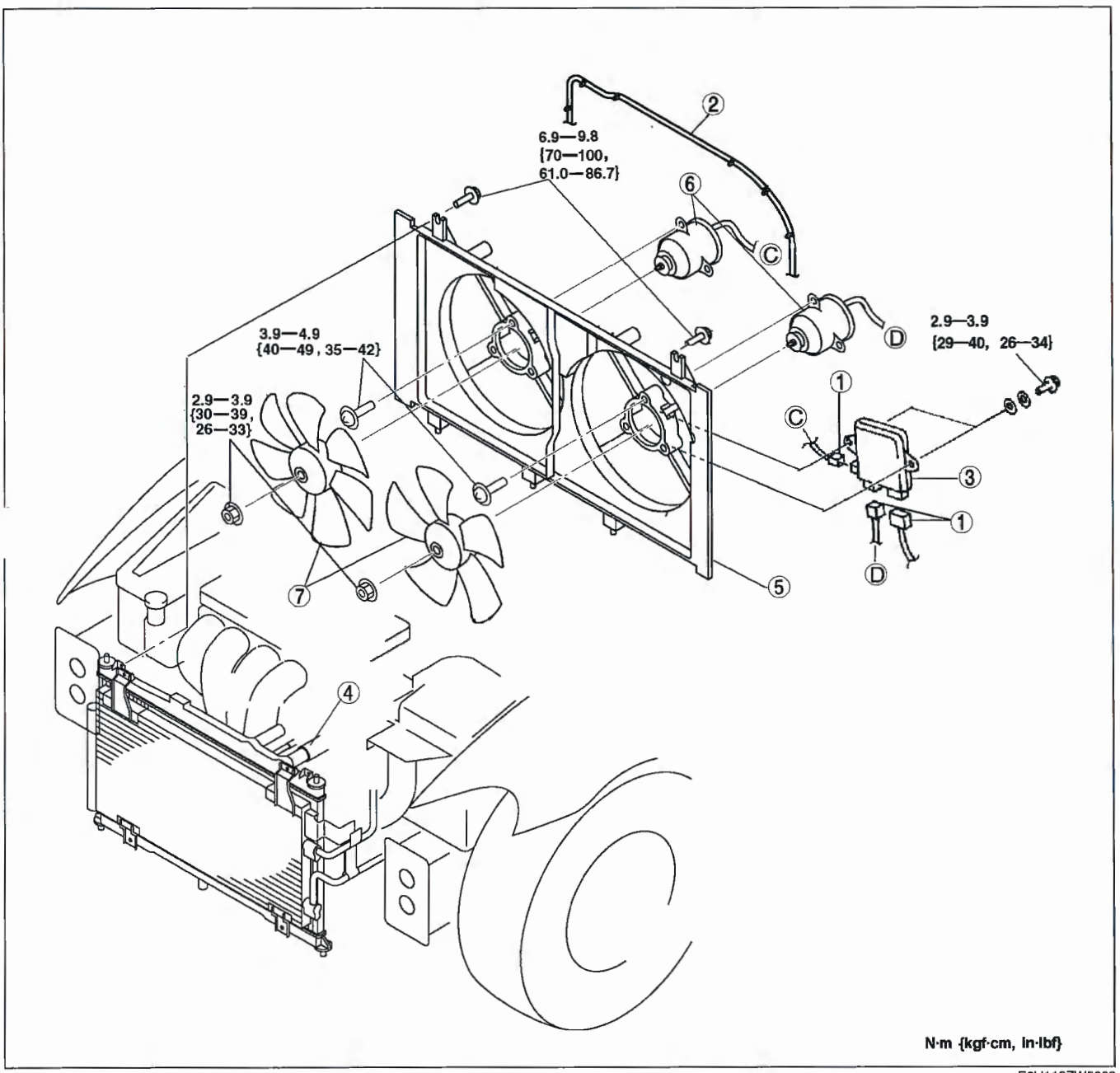

E6U112ZW5002

1	Fan control module connectors
2	Cooling fan wiring harness
3	Fan control module
4	Radiator upper hose

5	Cooling fan component
6	Cooling fan motor
7	Cooling fan blades

COOLING FAN MOTOR INSPECTION [L3, AJ]

E6U011215025W02

L3

1. Verify that the battery is fully charged. (See 01–17A–2 BATTERY INSPECTION [L3, AJ].)
2. Connect the battery positive voltage and an ammeter to the fan motor connector.
3. Verify that the fan motor operates smoothly at the standard current draw.
   - If not within the specification, replace the fan motor.

Standard current [12 V]
8.5—11.5 (A)

High (Cooling fan motor No.1 and No.2)

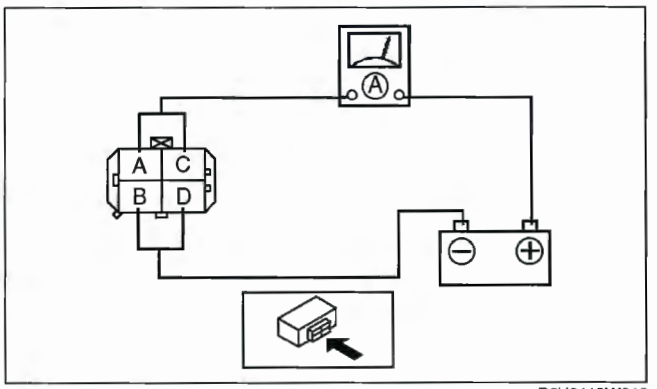

B6U0112W012

Middle (Cooling fan motor No.2)

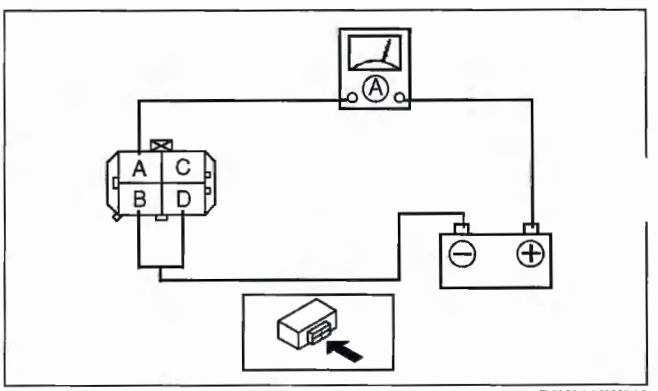

B6U0112W013

Low (Cooling fan motor No.1 and No.2)

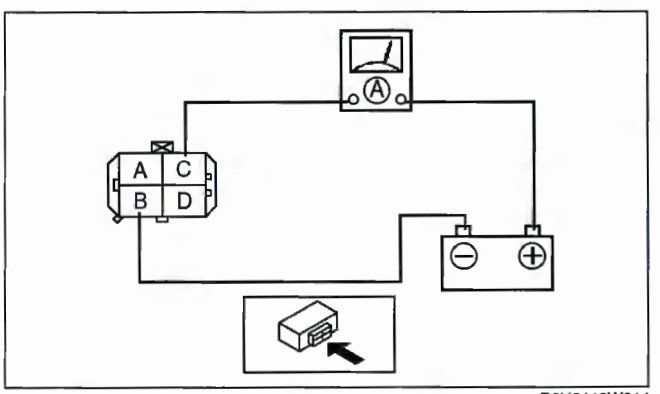

B6U0112W014

AJ

1. Verify that the battery is fully charged. (See 01–17A–2 BATTERY INSPECTION [L3, AJ].)
2. Disconnect the fan control module connector (3 terminals).
   Connect the positive battery voltage and an ammeter to the fan control module connector on fan motor side. (2 terminals)
4. Verify that the fan motor operates smoothly at the standard current draw.
   - If not within the specification, replace the fan motor.

   Standard current [12 V]
   11.8—14.8 (A)

5. Perform the same procedure as Step 2 for the cooling fan motor No.2.

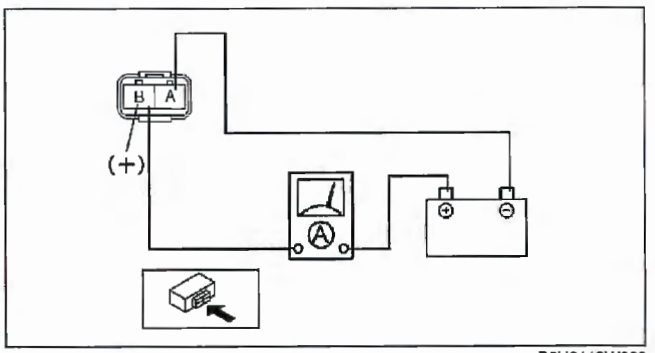

B6U0112W030

FAN CONTROL MODULE INSPECTION [AJ]

E6U011215150W01

1. Remove the two bolts from the fan control module with the connectors still connected.
2. Start and warm up the engine.
3. Monitor the engine coolant temperature with the WDS or equivalent.
4. Measure the voltage at the terminal B of fan control module connector (2 terminals) as shown in the table.
   - If there is any malfunction, replace the fan control module.

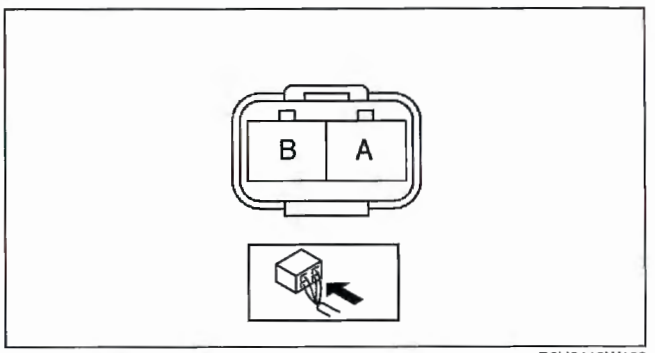

B6U0112W100

Inspection			Result
Condition	A/C	Engine coolant temp.	
IG SW ON	OFF	95 °C {203 °F} or less	Fan stops
IG SW ON (Idling)	OFF	95 °C {203 °F} or less	Fan stops
IG SW ON (Idling)	ON*	95 °C {203 °F} or less	6.9V—12.1V
IG SW ON (Idling)	OFF	100 °C {212 °F} or more	0.6V—14.6V

* : When the magnetic clutch and the middle pressure SW are on.

01–12B COOLING SYSTEM [L3 WITH TC]

COOLING SYSTEM LOCATION INDEX [L3 WITH TC] 01–12B–1
COOLING SYSTEM SERVICE WARNINGS [L3 WITH TC] 01–12B–2
ENGINE COOLANT LEVEL INSPECTION [L3 WITH TC] 01–12B–2
ENGINE COOLANT PROTECTION INSPECTION [L3 WITH TC] 01–12B–3
ENGINE COOLANT REPLACEMENT [L3 WITH TC] 01–12B–4
ENGINE COOLANT LEAKAGE INSPECTION [L3 WITH TC] 01–12B–5
COOLING SYSTEM CAP INSPECTION [L3 WITH TC] 01–12B–5
RADIATOR REMOVAL/INSTALLATION [L3 WITH TC] 01–12B–6
THERMOSTAT REMOVAL/INSTALLATION [L3 WITH TC] 01–12B–7
THERMOSTAT INSPECTION [L3 WITH TC] 01–12B–7
WATER PUMP REMOVAL/INSTALLATION [L3 WITH TC] 01–12B–8
COOLING FAN REMOVAL/INSTALLATION [L3 WITH TC] 01–12B–8
Fan Control Module Removal Note 01–12B–10
COOLING FAN MOTOR INSPECTION [L3 WITH TC] 01–12B–10
FAN CONTROL MODULE INSPECTION [L3 WITH TC] 01–12B–10

COOLING SYSTEM LOCATION INDEX [L3 WITH TC]

E6U011200000W03

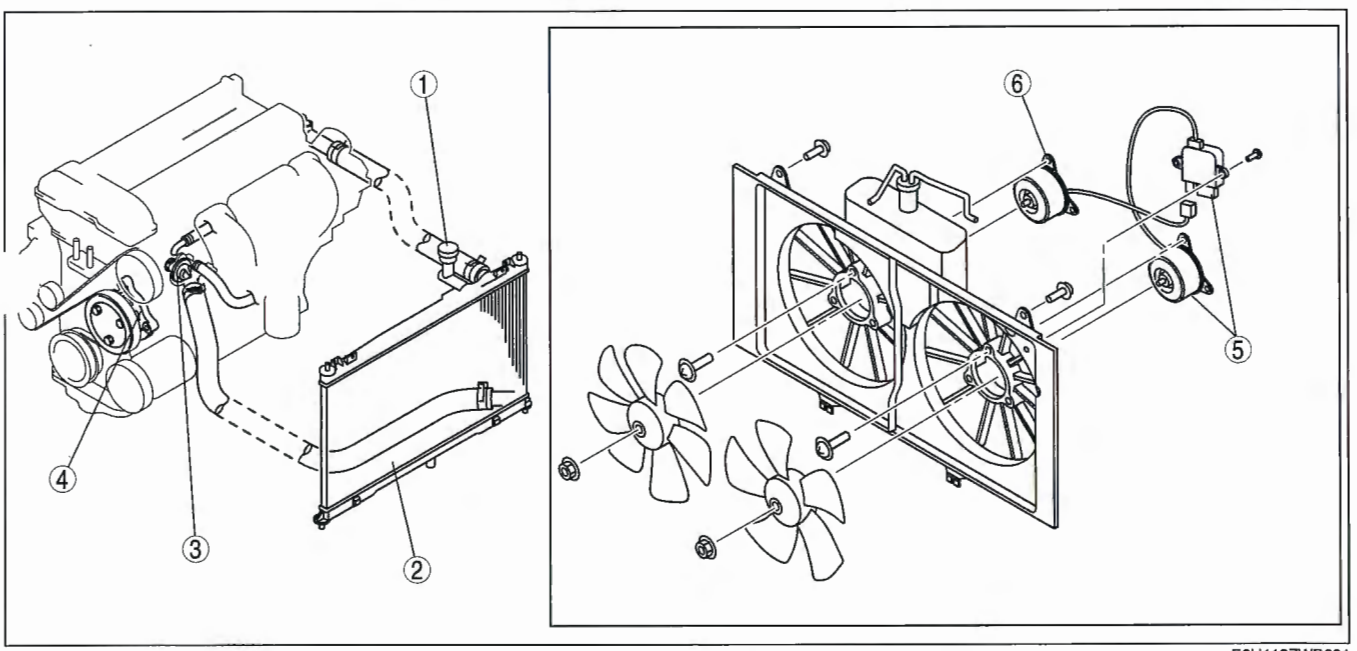

E6U112ZWB001

1	Cooling system cap (See 01–12B–5 COOLING SYSTEM CAP INSPECTION [L3 WITH TC].)
2	Radiator (See 01–12B–6 RADIATOR REMOVAL/ INSTALLATION [L3 WITH TC].)
3	Thermostat (See 01–12B–7 THERMOSTAT REMOVAL/ INSTALLATION [L3 WITH TC].) (See 01–12B–7 THERMOSTAT INSPECTION [L3 WITH TC].)

4	Water pump (See 01–12B–8 WATER PUMP REMOVAL/ INSTALLATION [L3 WITH TC].)
5	Cooling fan motor No.1 and fan control module component (See 01–12B–8 COOLING FAN REMOVAL/ INSTALLATION [L3 WITH TC].) (See 01–12B–10 FAN CONTROL MODULE INSPECTION [L3 WITH TC].)
6	Cooling fan motor No.2 (See 01–12B–8 COOLING FAN REMOVAL/ INSTALLATION [L3 WITH TC].) (See 01–12B–10 COOLING FAN MOTOR INSPECTION [L3 WITH TC].)

COOLING SYSTEM SERVICE WARNINGS [L3 WITH TC]

E6U011200000W04

Warning

- **Never remove the cooling system cap or loosen the radiator drain plug while the engine is running, or when the engine and radiator are hot. Scalding engine coolant and steam may shoot out and cause serious injury. It may also damage the engine and cooling system.**
- **Turn off the engine and wait until it has cooled. Even then, be very careful when removing the cap. Wrap a thick cloth around it and slowly turn it counterclockwise to the first stop. Step back while the pressure escapes.**
- **When you are sure all the pressure is gone, press down on the cap using the cloth, turn it, and remove it.**

ENGINE COOLANT LEVEL INSPECTION [L3 WITH TC]

E6U011215001W05

Warning

- **Never remove the cooling system cap or loosen the radiator drain plug while the engine is running, or when the engine and radiator are hot. Scalding engine coolant and steam may shoot out and cause serious injury. It may also damage the engine and cooling system.**
- **Turn off the engine and wait until it has cooled. Even then, be very careful when removing the cap. Wrap a thick cloth around it and slowly turn it counterclockwise to the first stop. Step back while the pressure escapes.**
- **When you are sure all the pressure is gone, press down on the cap using the cloth, turn it, and remove it.**

Note

- If the "FL22" mark is shown on or near the cooling system cap, use FL22 type engine coolant.
- FL22 type engine coolant is shipped as a diluted solution (55% coolant, 45% water). Use the solution as is when replacing coolant.

1. Verify that the engine coolant level in the engine coolant reserve tank is between the FULL and LOW marks.
   - If the engine coolant level is below LOW, remove the cooling system cap and add engine coolant. (See 01–12B–4 ENGINE COOLANT REPLACEMENT [L3 WITH TC].)

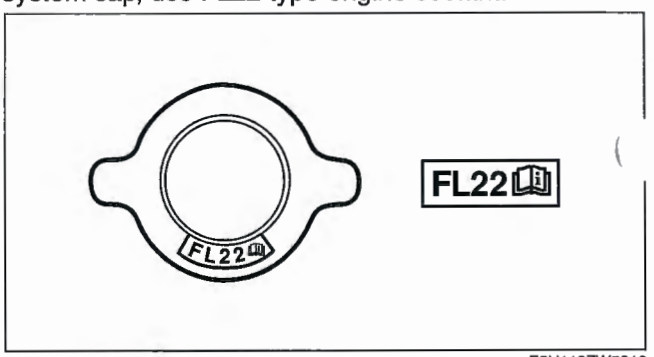

E5U112ZW5010

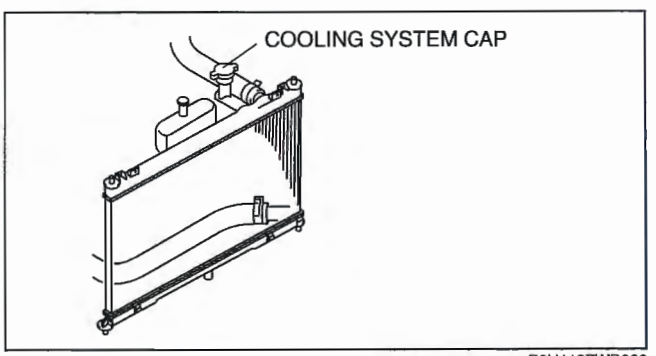

E6U112ZWB002

ENGINE COOLANT PROTECTION INSPECTION [L3 WITH TC]

E6U011215001W06

1. Measure the engine coolant temperature and specific gravity using a thermometer and a hydrometer.

Caution

- **Use engine coolant at a concentration that meets the environmental conditions in which the vehicle is driven, otherwise engine damage could occur.**
- **The engine has aluminum parts and must be protected by an ethylene-glycol-based coolant to prevent corrosion and freezing.**
- **Do not use coolants containing Alcohol, Methanol, Borate or Silicate. These coolants could damage the cooling system.**
- **Use only soft (demineralized) water in the coolant mixture. Water that contains minerals will cut down on the coolant's effectiveness.**
- **Engine coolant damages paint. If engine coolant does get on a painted surface, rinse it off quickly.**

Note

- If the "FL22" mark is shown on or near the cooling system cap, use FL22 type engine coolant.
- FL22 type engine coolant is shipped as a diluted solution (55% coolant, 45% water). Use the solution as is when replacing coolant.

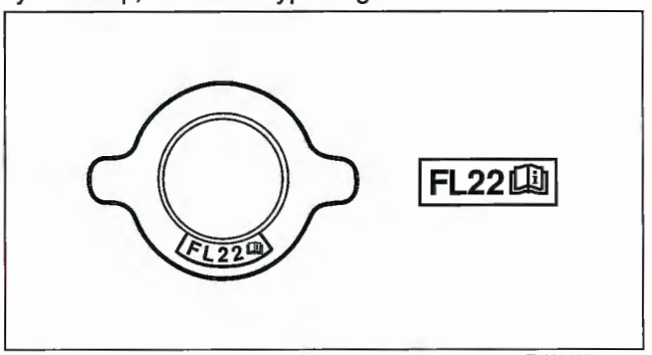

E5U112ZW5010

2. Determine the engine coolant protection level by referring to the graph shown.
   - If the engine coolant protection level is not correct, add water or engine coolant.

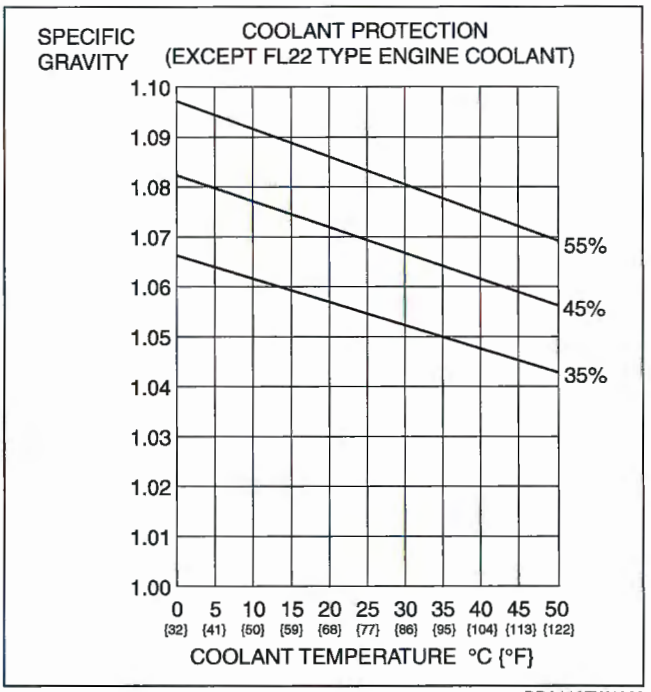

DDA112ZW4003

ENGINE COOLANT REPLACEMENT [L3 WITH TC]

E6U011215001W07

Warning

- **Never remove the cooling system cap or loosen the radiator drain plug while the engine is running, or when the engine and radiator are hot. Scalding engine coolant and steam may shoot out and cause serious injury. It may also damage the engine and cooling system.**
- **Turn off the engine and wait until it has cooled. Even then, be very careful when removing the cap. Wrap a thick cloth around it and slowly turn it counterclockwise to the first stop. Step back while the pressure escapes.**
- **When you are sure all the pressure is gone, press down on the cap using the cloth, turn it, and remove it.**

Caution

- **Use engine coolant at a concentration that meets the environmental conditions in which the vehicle is driven, otherwise engine damage could occur.**
- **The engine has aluminum parts and must be protected by an ethylene-glycol-based coolant to prevent corrosion and freezing.**
- **Do not use coolants containing Alcohol, Methanol, Borate or Silicate. These coolants could damage the cooling system.**
- **Use only soft (demineralized) water in the coolant mixture. Water that contains minerals will cut down on the coolant's effectiveness.**
- **Engine coolant damages paint. If engine coolant does get on a painted surface, rinse it off quickly.**

Note

- If the "FL22" mark is shown on or near the cooling system cap, use FL22 type engine coolant.
- FL22 type engine coolant is shipped as a diluted solution (55% coolant, 45% water). Use the solution as is when replacing coolant.

Engine coolant capacity (approx. quantity)
8.0 L {8.5 US qt, 7.0 Imp qt}

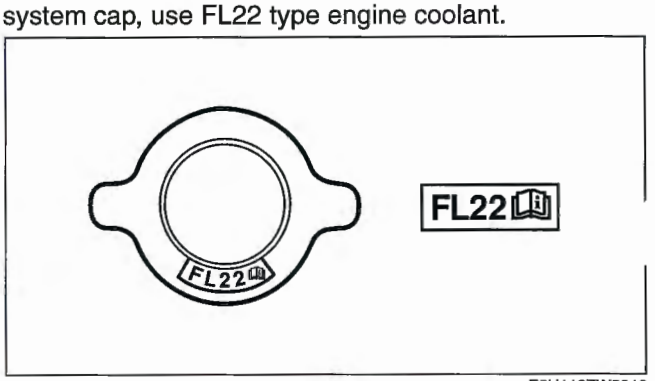

E5U112ZW5010

1. Remove the cooling system cap and the radiator drain plug.
2. Drain the engine coolant into a container.
3. Flush the cooling system with water until all traces of color are gone.
4. Let the system drain completely.
5. Tighten the radiator drain plug.

Tightening torque
1.5—2.4 N·m {15—25 kgf·cm, 13—21 in·lbf}

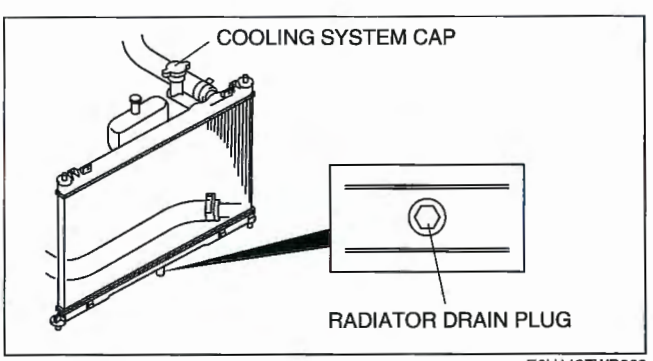

E6U112ZWB003

6. Referring to the following chart, select the correct volume percentage of the water and engine coolant.

Antifreeze solution mixture percentage (Except FL22 type engine coolant)

Engine coolant protection	Volume percentage (%)		Gravity at 20 °C {68 °F}
	Water	Coolant	
Above -16 °C {3 °F}	65	35	1.057
Above -26 °C {-15 °F}	55	45	1.072
Above -40 °C {-40 °F}	45	55	1.086

7. Slowly pour the engine coolant into the radiator up to the engine coolant filler port.
8. Fill the engine coolant into the engine coolant reserve tank up to the FULL mark on the engine coolant reserve tank.

9. Install the cooling system cap.

Caution
- **If the engine coolant temperature becomes too high, stop the engine to prevent it from overheating.**

10. Start the engine and idle it until the cooling fan operates.
11. After engine warms up, perform the following steps.
    (1) Run the engine at **2,500 rpm** for **5 min.**
    (2) Run the engine at **3,000 rpm** for **5 s**, then idle.
    (3) Repeat step (2) several times.
    (4) Idle the engine for **1 min.**
12. Stop the engine and wait until it is cools.
13. Inspect the engine coolant level.
    - If it is low, repeat steps 7—13.
14. Inspect for engine coolant leakage. (See 01–12B–5 ENGINE COOLANT LEAKAGE INSPECTION [L3 WITH TC].)

ENGINE COOLANT LEAKAGE INSPECTION [L3 WITH TC]

E6U011215001W08

Warning
- **Never remove the cooling system cap or loosen the radiator drain plug while the engine is running, or when the engine and radiator are hot. Scalding engine coolant and steam may shoot out and cause serious injury. It may also damage the engine and cooling system.**
- **Turn off the engine and wait until it has cooled. Even then, be very careful when removing the cap. Wrap a thick cloth around it and slowly turn it counterclockwise to the first stop. Step back while the pressure escapes.**
- **When you are sure all the pressure is gone, press down on the cap using the cloth, turn it, and remove it.**

1. Inspect the engine coolant level. (See 01–12B–2 ENGINE COOLANT LEVEL INSPECTION [L3 WITH TC].) Remove the cooling system cap.
2. Install the **SST** to the engine coolant filler port.
4. Apply specified pressure to the cooling system.

Caution
- **Applying more than 142.2 kPa {1.45 kgf/cm^2, 20.6 psi} can damage the hoses, fittings, and other components, and cause leaks.**

Pressure
142.2 kPa {1.45 kgf/cm^2, 20.6 psi}

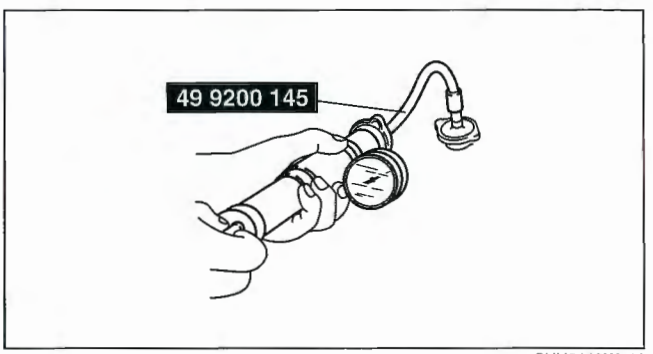

CHU0112W013

5. When pressurizing the cooling system, verify that the pressure is maintained.
    - If the gauge needle drops, it may indicate water leakage. Repair or replace the applicable part.

COOLING SYSTEM CAP INSPECTION [L3 WITH TC]

E6U011215201W02

Warning
- **Never remove the cooling system cap or loosen the radiator drain plug while the engine is running, or when the engine and radiator are hot. Scalding engine coolant and steam may shoot out and cause serious injury. It may also damage the engine and cooling system.**
- **Turn off the engine and wait until it has cooled. Even then, be very careful when removing the cap. Wrap a thick cloth around it and slowly turn it counterclockwise to the first stop. Step back while the pressure escapes.**
- **When you are sure all the pressure is gone, press down on the cap using the cloth, turn it, and remove it.**

1. Clean the cooling system cap and the sealed part.
2. Inspect the cooling system cap for cracks or everted seal.
    - If there is any malfunction, replace the cooling system cap.

3. Fill the **SST** with water or engine coolant to the full level and attach the cooling system cap to the **SST**.
4. Hold the cooling system cap downward and apply pressure gradually. Verify that the pressure is held stable for **10 s**.
   - If the pressure is not held stable, replace the cooling system cap.

Cooling system cap valve opening pressure
112.8—142.2 kPa {1.15—1.45 kgf/cm^2, 16.4—20.6 psi}

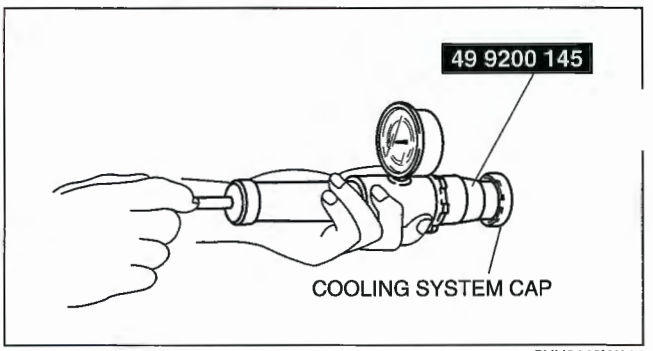

CHU0112W011

RADIATOR REMOVAL/INSTALLATION [L3 WITH TC]

E6U011215200W02

Warning
- **Remove and install all parts when the engine is cold, otherwise they can cause severe burns or serious injury.**

1. Disconnect the negative battery cable.
2. Drain the engine coolant. (See 01–12B–4 ENGINE COOLANT REPLACEMENT [L3 WITH TC].)
3. Remove the air cleaner. (See 01–13B–4 INTAKE AIR SYSTEM REMOVAL/INSTALLATION [L3 WITH TC].)
4. Remove the shroud panel. (See 09–10–17 SHROUD PANEL REMOVAL/INSTALLATION.)
5. Remove the cooling fan component. (See 01–12B–8 COOLING FAN REMOVAL/INSTALLATION [L3 WITH TC].)
6. Remove in the order indicated in the table.
7. Install in the reverse order of the removal.
8. Refill the engine coolant. (See 01–12B–4 ENGINE COOLANT REPLACEMENT [L3 WITH TC].)
9. Inspect for engine coolant leakage. (See 01–12B–5 ENGINE COOLANT LEAKAGE INSPECTION [L3 WITH TC].)

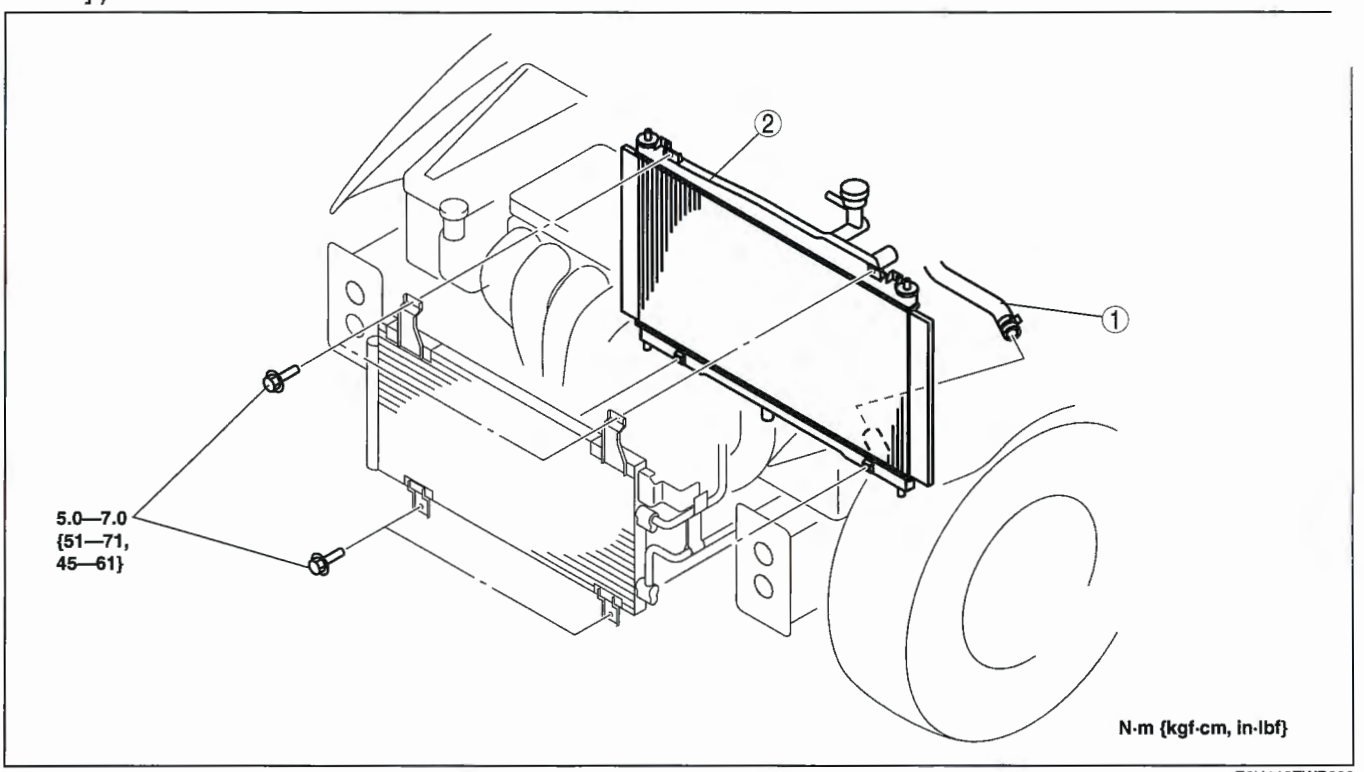

E6U112ZWB009

1	Lower radiator hose	2	Radiator

THERMOSTAT REMOVAL/INSTALLATION [L3 WITH TC]

E6U011215171W03

Warning
- **Remove and install all parts when the engine is cold, otherwise they can cause severe burns or serious injury.**

1. Disconnect the negative battery cable.
2. Drain the engine coolant. (See 01–12B–4 ENGINE COOLANT REPLACEMENT [L3 WITH TC].)
3. Remove the drive belt. (See 01–10B–3 DRIVE BELT REPLACEMENT [L3 WITH TC].)
4. Remove the P/S oil pump with hoses and pipe still connected. Position the P/S oil pump out of the way. (See 06–12–27 POWER STEERING OIL PUMP REMOVAL/INSTALLATION [L3, L3 WITH TC].)
5. Remove in the order indicated in the table.
6. Install in the reverse order of removal.
7. Refill the engine coolant. (See 01–12B–4 ENGINE COOLANT REPLACEMENT [L3 WITH TC].)
8. Inspect for engine coolant leakage. (See 01–12B–5 ENGINE COOLANT LEAKAGE INSPECTION [L3 WITH TC].)

1	Water hose
2	Lower radiator hose
3	Thermostat
4	Gasket

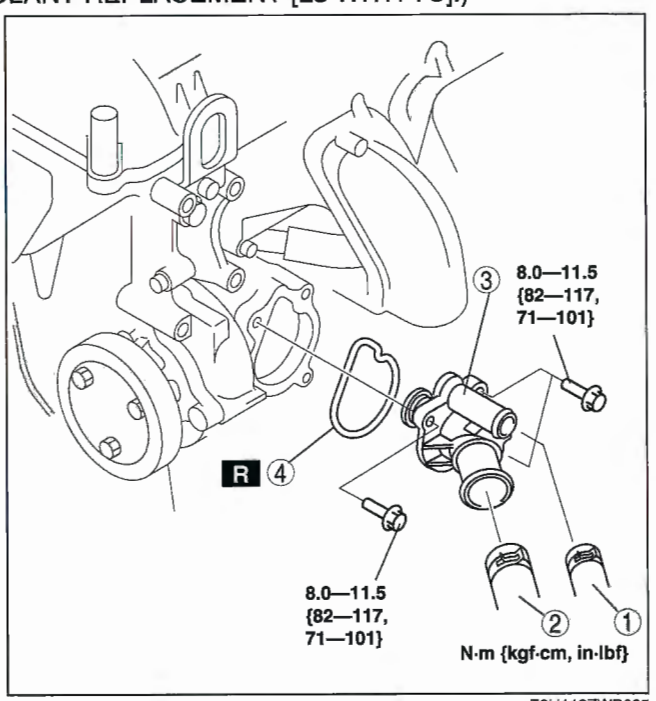

E6U112ZWB005

THERMOSTAT INSPECTION [L3 WITH TC]

E6U011215171W04

1. Visually inspect that the thermostat valve is closed.
2. Place the thermostat and a thermometer in water.

Warning
- **During inspection, the thermostat and water are extremely hot and can cause severe burns. Do not touch the thermostat and water directly.**

3. Heat the water and inspect the following.
   - If not as specified, replace the thermostat.

Thermostat initial-opening temperature
80—84 °C {176—183 °F}

Thermostat full-open temperature
97 °C {206 °F}

Thermostat full-open lift
More than 8.0 mm {0.31 in}

WATER PUMP REMOVAL/INSTALLATION [L3 WITH TC]

E6U011215010W02

Warning
- **Remove and install all parts when the engine is cold, otherwise they can cause severe burns or serious injury.**

1. Disconnect the negative battery cable.
2. Drain the engine coolant. (See 01–12B–4 ENGINE COOLANT REPLACEMENT [L3 WITH TC].)
3. Remove the drive belt. (See 01–10B–3 DRIVE BELT REPLACEMENT [L3 WITH TC].)
4. Remove the P/S oil pump with hoses and pipe still connected. Position the P/S oil pump out of the way. (See 06–12–27 POWER STEERING OIL PUMP REMOVAL/INSTALLATION [L3, L3 WITH TC].)
5. Remove in the order indicated in the table.
6. Install in the reverse order of removal.
7. Refill the engine coolant. (See 01–12B–4 ENGINE COOLANT REPLACEMENT [L3 WITH TC].)
8. Inspect for engine coolant leakage. (See 01–12B–5 ENGINE COOLANT LEAKAGE INSPECTION [L3 WITH TC].)

1	Water pump pulley
2	Water pump
3	O-ring

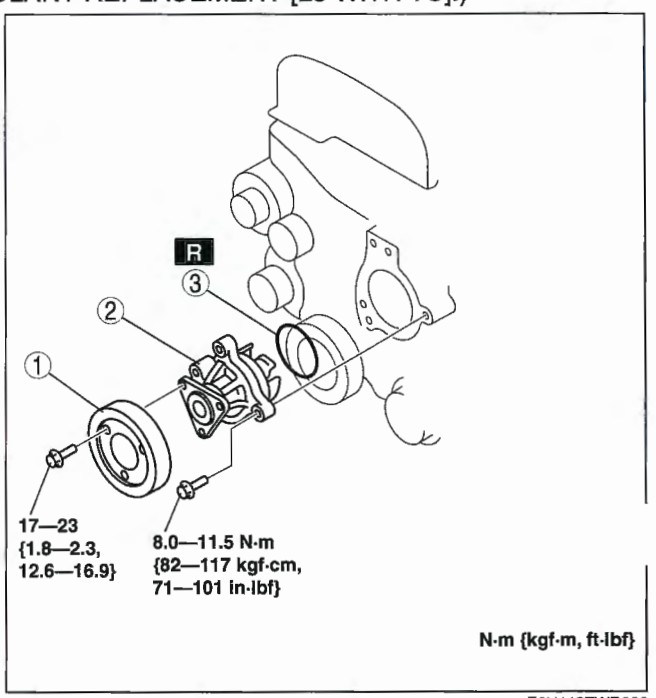

E6U112ZWB006

COOLING FAN REMOVAL/INSTALLATION [L3 WITH TC]

E6U011215025W03

Warning
- **Remove and install all parts when the engine is cold, otherwise they can cause severe burns or serious injury.**

1. Disconnect the negative battery cable.
2. Drain the engine coolant. (See 01–12B–4 ENGINE COOLANT REPLACEMENT [L3 WITH TC].)
3. Remove the air cleaner. (See 01–13B–4 INTAKE AIR SYSTEM REMOVAL/INSTALLATION [L3 WITH TC].)
4. Remove the shroud panel. (See 09–10–17 SHROUD PANEL REMOVAL/INSTALLATION.)
5. Remove in the order indicated in the table.
6. Install in the reverse order of removal.
7. Refill the engine coolant. (See 01–12B–4 ENGINE COOLANT REPLACEMENT [L3 WITH TC].)

8. Inspect for engine coolant leakage. (See 01–12B–5 ENGINE COOLANT LEAKAGE INSPECTION [L3 WITH TC].)

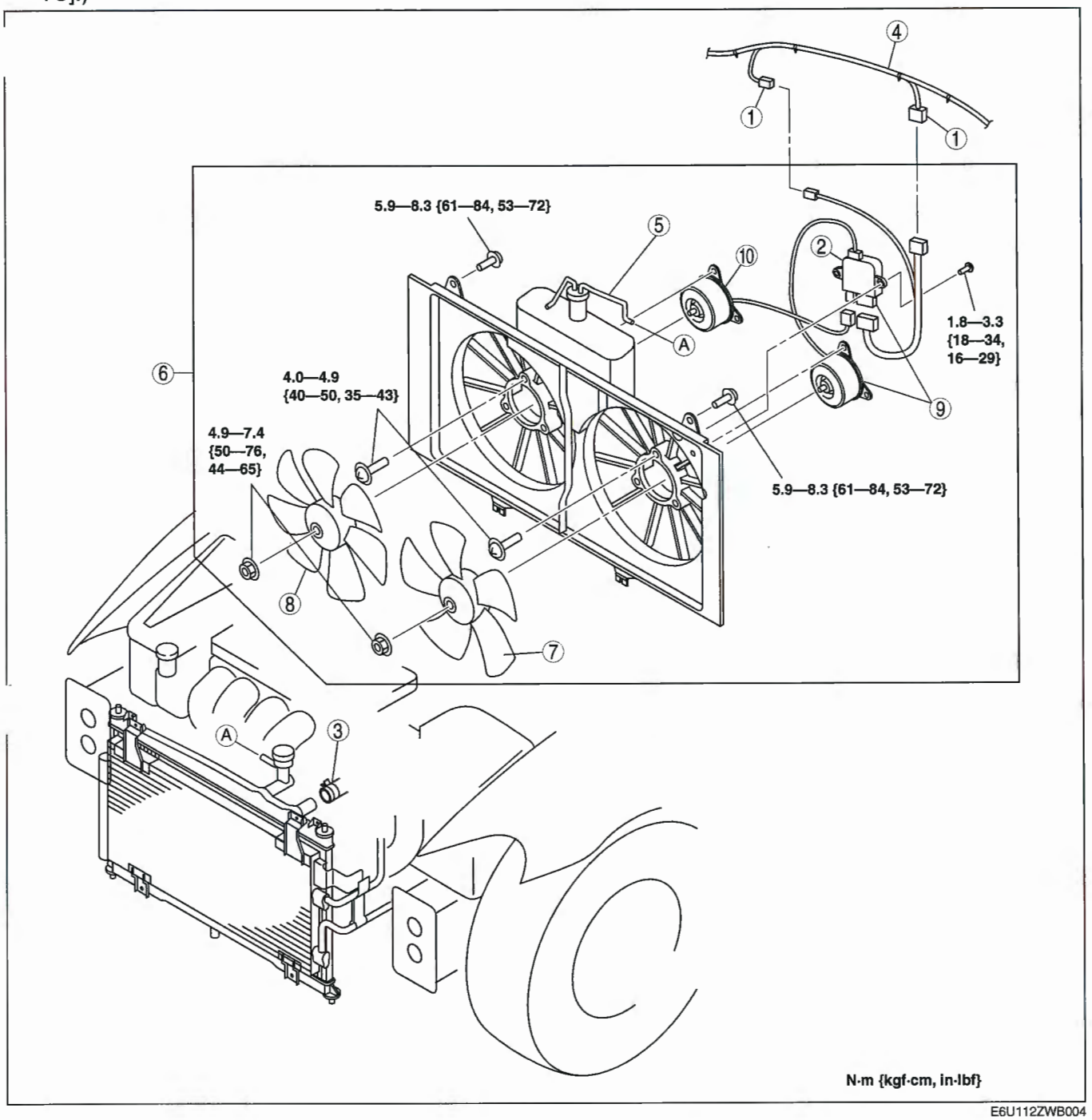

E6U112ZWB004

1	Fan control module connectors
2	Fan control module (See 01–12B–10 Fan Control Module Removal Note.)
3	Upper radiator hose
4	Wiring harness
5	Coolant reserve tank hose

6	Cooling fan component
7	Cooling fan No.1
8	Cooling fan No.2
9	Cooling fan motor No.1 and fan control module component
10	Cooling fan motor No.2

Fan Control Module Removal Note

Note
- Cooling fan component cannot be removed with the fan control module attached to the fan cowling.

1. Remove the two fan control module installation screws with the connector still connected so that the fan control module is movable.

COOLING FAN MOTOR INSPECTION [L3 WITH TC]

E6U011215025W04

Note
- Cooling fan motor No.2 can be inspected, however, cooling fan motor No.1 cannot be inspected because it is integrated with the fan control module.

1. Verify that the battery is fully charged. (See 01–17B–2 BATTERY INSPECTION [L3 WITH TC].)
2. Disconnect the cooling fan motor No.2 connector (2 terminals).
3. Install a tester and battery to the cooling fan motor No.2 connector (2 terminals) as shown in the figure.
4. Verify that fan motor No.2 operates smoothly at the standard current.
   - If not within the specification, replace the fan motor No.2.

Cooling fan motor No.2 current
12.8—16.8 A

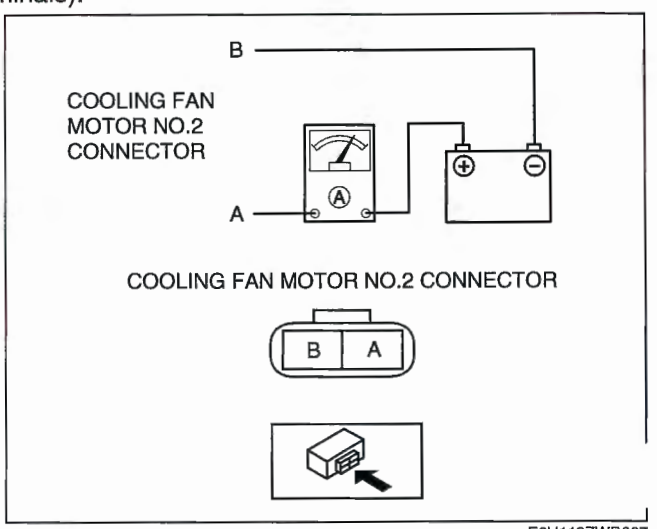

E6U112ZWB007

FAN CONTROL MODULE INSPECTION [L3 WITH TC]

E6U011215150W02

1. Remove the two bolts from the fan control module with the connectors still connected.
2. Start and warm up the engine.
3. Monitor the engine coolant temperature with the WDS or equivalent.
4. Measure the voltage at terminal A of the fan control module connector (2 terminals) as shown in the table.
   - If there is any malfunction, replace the fan control module.

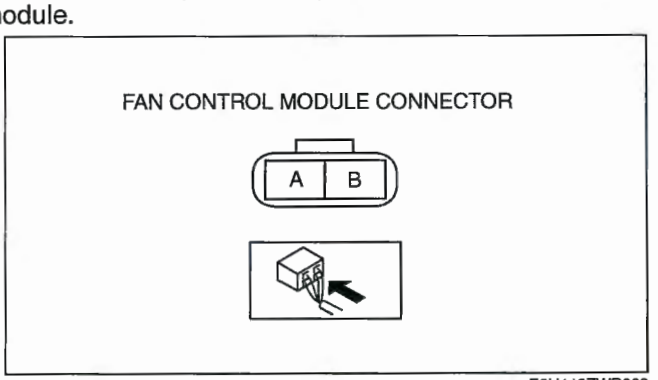

E6U112ZWB008

Inspection			Result
Condition	A/C	Engine coolant temp.	
IG SW ON	OFF	95 °C {203 °F} or less	Fan stops
IG SW ON (Idling)	OFF	95 °C {203 °F} or less	Fan stops
IG SW ON (Idling)	ON*	95 °C {203 °F} or less	8.9—10.3V
IG SW ON (Idling)	OFF	100 °C {212 °F} or more	0.6—14.6V

* : When the magnetic clutch and the middle pressure switches are on.

01–13A INTAKE-AIR SYSTEM [L3]

INTAKE AIR SYSTEM LOCATION INDEX [L3] 01–13A–2
INTAKE AIR SYSTEM FLOW DIAGRAM [L3] 01–13A–3
VACUUM HOSE ROUTING DIAGRAM [L3] 01–13A–3
INTAKE AIR SYSTEM REMOVAL/INSTALLATION [L3] 01–13A–4
Resonance Chamber Removal Note 01–13A–5
Water Hose Removal Note 01–13A–5
Air Cleaner Case Installation Note 01–13A–5
AIR CLEANER ELEMENT INSPECTION [L3] 01–13A–5
VARIABLE AIR DUCT (VAD) SHUTTER VALVE INSPECTION [L3] 01–13A–5
VARIABLE AIR DUCT (VAD) CONTROL SOLENOID VALVE INSPECTION [L3] 01–13A–6
Circuit Open/Short Inspection 01–13A–6
VARIABLE AIR DUCT (VAD) CHECK VALVE (ONE-WAY) INSPECTION [L3] 01–13A–6
THROTTLE ACTUATOR INSPECTION [L3] 01–13A–7
Resistance Inspection 01–13A–7
Circuit Open/Short Inspection 01–13A–7
VARIABLE INTAKE AIR SHUTTER VALVE ACTUATOR INSPECTION [L3] 01–13A–8
VARIABLE INTAKE AIR SOLENOID VALVE INSPECTION [L3] 01–13A–8
Circuit Open/Short Inspection 01–13A–8
VARIABLE TUMBLE SHUTTER VALVE ACTUATOR INSPECTION [L3] 01–13A–9
VARIABLE TUMBLE SOLENOID VALVE INSPECTION [L3] 01–13A–9
Circuit Open/Short Inspection 01–13A–9
ACCELERATOR PEDAL REMOVAL/INSTALLATION [L3] 01–13A–10

INTAKE AIR SYSTEM LOCATION INDEX [L3]

E6U011300000W09

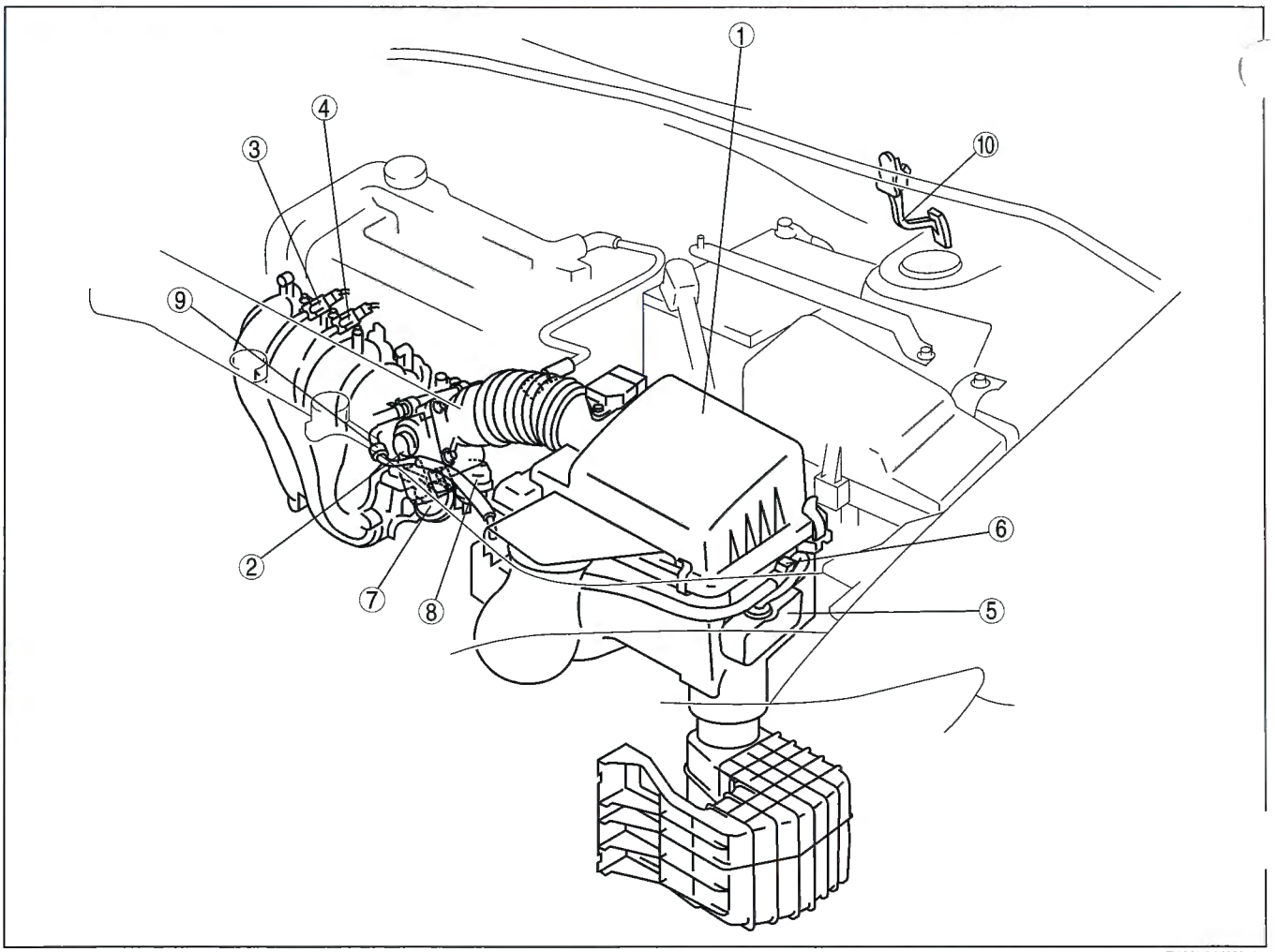

B6U0113W015

1	Air cleaner (See 01–13A–4 INTAKE AIR SYSTEM REMOVAL/ INSTALLATION [L3])
2	Throttle body (See 01–13A–4 INTAKE AIR SYSTEM REMOVAL/ INSTALLATION [L3])
3	Variable intake air solenoid valve (See 01–13A–8 VARIABLE INTAKE AIR SOLENOID VALVE INSPECTION [L3])
4	Variable tumble solenoid valve (See 01–13A–9 VARIABLE TUMBLE SOLENOID VALVE INSPECTION [L3])
5	VAD shutter valve (See 01–13A–5 VARIABLE AIR DUCT (VAD) SHUTTER VALVE INSPECTION [L3])

6	VAD control solenoid valve (See 01–13A–6 VARIABLE AIR DUCT (VAD) CONTROL SOLENOID VALVE INSPECTION [L3])
7	Variable intake air shutter valve actuator (See 01–13A–8 VARIABLE INTAKE AIR SHUTTER VALVE ACTUATOR INSPECTION [L3])
8	Variable tumble shutter valve actuator (See 01–13A–9 VARIABLE TUMBLE SHUTTER VALVE ACTUATOR INSPECTION [L3])
9	VAD check valve (one-way) (See 01–13A–6 VARIABLE AIR DUCT (VAD) CHECK VALVE (ONE-WAY) INSPECTION [L3])
10	Accelerator pedal (See 01–13A–10 ACCELERATOR PEDAL REMOVAL/INSTALLATION [L3])

INTAKE AIR SYSTEM FLOW DIAGRAM [L3]

E6U011300000W10

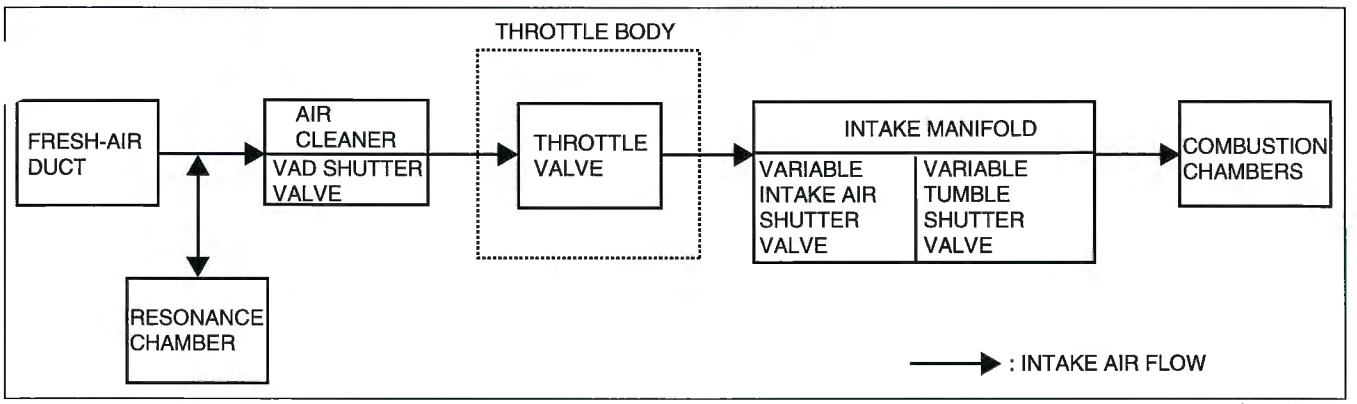

C6U0113W001

VACUUM HOSE ROUTING DIAGRAM [L3]

E6U011300000W11

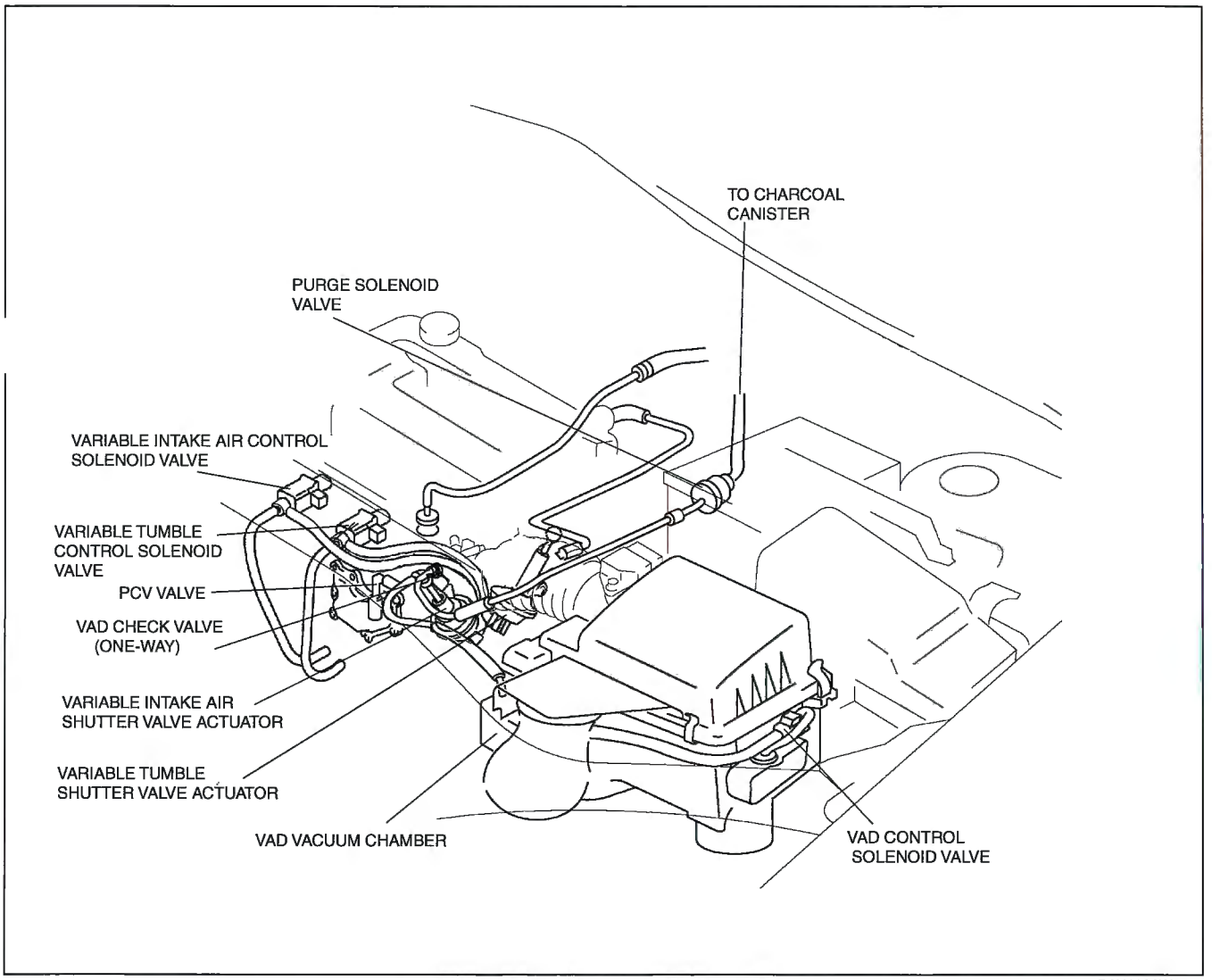

D6U113AW7001

INTAKE AIR SYSTEM REMOVAL/INSTALLATION [L3]

E6U011300000W12

Warning

- **A hot engine and intake-air system can cause severe burns. Turn off the engine and wait until the are cool before removing the intake-air system.**
- **Fuel vapor is hazardous. It can easily ignite, causing serious injury and damage. Always keep sparks and flames away from fuel.**
- **Fuel line spills and leakage are dangerous. Fuel can ignite and cause serious injuries or death and damage. Fuel can also irritate skin and eyes. To prevent this, always complete the "Fuel Line Safety Procedure". (See 01–14A–6 BEFORE REPAIR PROCEDURE [L3, AJ].)**

1. Disconnect the negative battery cable.
2. Remove in the order indicated in the table.
3. Install in the reverse order of removal.
4. Complete the "AFTER REPAIR PROCEDURE". (See 01–14A–6 AFTER REPAIR PROCEDURE [L3, AJ].)

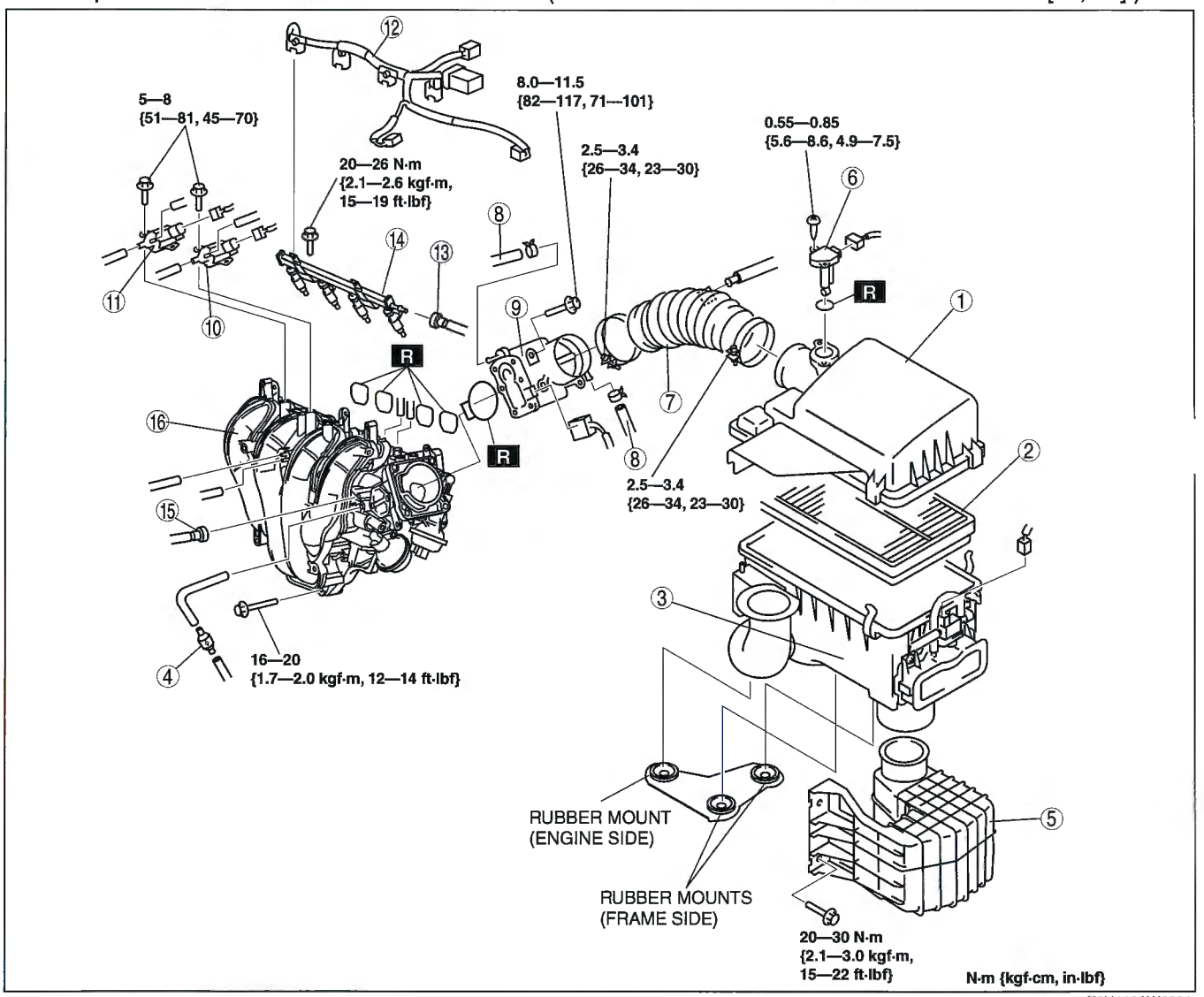

E6U113AW5001

1	Air cleaner cover
2	Air cleaner element
3	Air cleaner case (See 01–13A–5 Air Cleaner Case Installation Note)
4	VAD check valve (one-way)
5	Resonance chamber (See 01–13A–5 Resonance Chamber Removal Note)
6	MAF/IAT sensor

7	Air hose
8	Water hose (See 01–13A–5 Water Hose Removal Note)
9	Throttle body
10	Variable tumble solenoid valve
11	Variable intake air solenoid valve
12	Fuel injector connector

13	Plastic fuel hose (See 01–14A–24 Plastic Fuel Hose Removal Note) (See 01–14A–26 Plastic Fuel Hose Installation Note)

14	Fuel distributor
15	Evaporative hose (See 01–16A–7 Evaporative Hose Removal Note (Type A)) (See 01–16A–9 Evaporative Hose Installation Note)
16	Intake manifold

Resonance Chamber Removal Note

1. Remove the front mudguard (LH) before removing the resonance chamber.

Water Hose Removal Note

1. Drain the engine coolant before removing the water hose. (See 01–12A–5 ENGINE COOLANT REPLACEMENT [L3, AJ].)

Air Cleaner Case Installation Note

Caution

- **Before assembling the air cleaner, verify that the rubber mounts have not fallen off from the air cleaner bracket (3 locations).**
- **Always install the air cleaner case using the following procedure.**

Note

- When inserting the rubber mounts into the air cleaner case, soapy water can be applied.

1. Verify that the rubber mounts are set in the air cleaner bracket (3 locations).
2. Install the projections on the frame side (2 locations).
3. Verify that the projections on the frame side are installed securely.
4. Install the projection on the engine side (remaining location).
5. Verify that the projection on the engine side installed securely.

AIR CLEANER ELEMENT INSPECTION [L3]

E6U011313300W01

1. Remove the air cleaner element. (See 01–13A–4 INTAKE AIR SYSTEM REMOVAL/INSTALLATION [L3].)
2. Verify that the air cleaner element surface is free of dirt.
   - If there is dirt, use an air gun or similar tool to clean the element.
   - If the replacement time limit has passed, replace the element.

vARIABLE AIR DUCT (VAD) SHUTTER VALVE INSPECTION [L3]

E6U011320131W01

1. Remove the air cleaner case. (See 01–13A–4 INTAKE AIR SYSTEM REMOVAL/INSTALLATION [L3].)
2. Disconnect the vacuum hose from the VAD shutter valve actuator.
3. Connect a vacuum pump to the VAD shutter valve actuator.
4. Apply vacuum and verify that the rod moves.
   - If the rod does not move, replace the air cleaner.

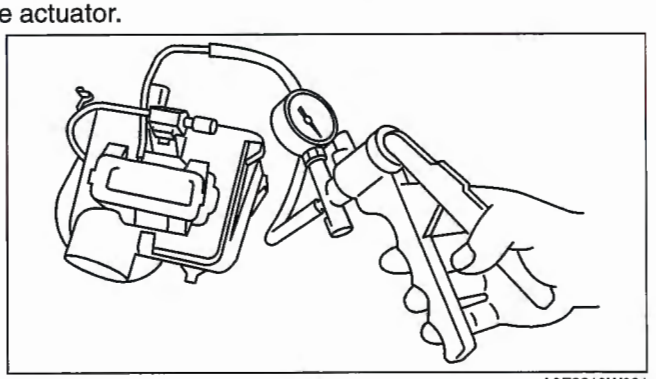

A6E3910W031

Vacuum kPa {mmHg, inHg}	Rod movement
Below –10 {–75, –3.0}	Not move
Above –35 {–263, –10.4}	Fully pulled

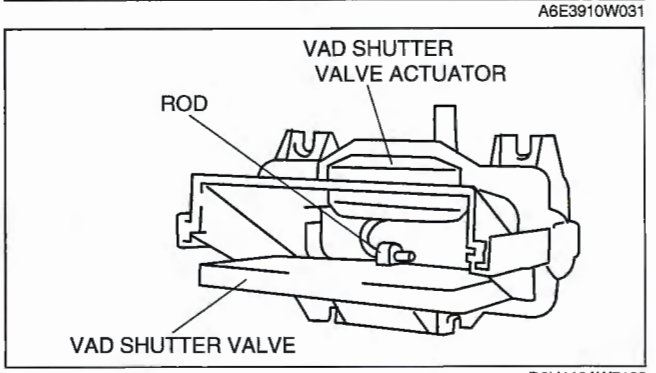

D6U113AW7108

VARIABLE AIR DUCT (VAD) CONTROL SOLENOID VALVE INSPECTION [L3]

E6U011318741W01

1. Remove the VAD control solenoid valve. (See 01–13A–4 INTAKE AIR SYSTEM REMOVAL/INSTALLATION [L3].)
2. Inspect airflow between the ports under the following conditions.
   - If not as specified, replace the VAD control solenoid valve.
   - If as specified, carry out the "Circuit Open/Short Inspection".

○—○ : Continuity ○═○ : Airflow

Step	Terminal		Port		
	A	B	A	B	C
1	○	○	○	○	
2	B+	GND	○		○

B6U0113W008

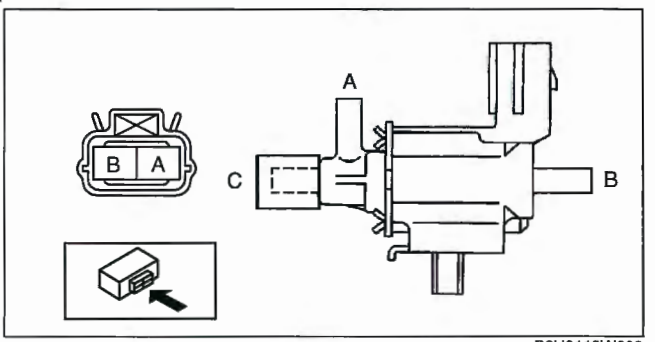

B6U0113W009

Circuit Open/Short Inspection

1. Disconnect the PCM connector. (See 01–40A–9 PCM REMOVAL/INSTALLATION [L3].)
2. Inspect the following wiring harness for open or short circuit (continuity check).

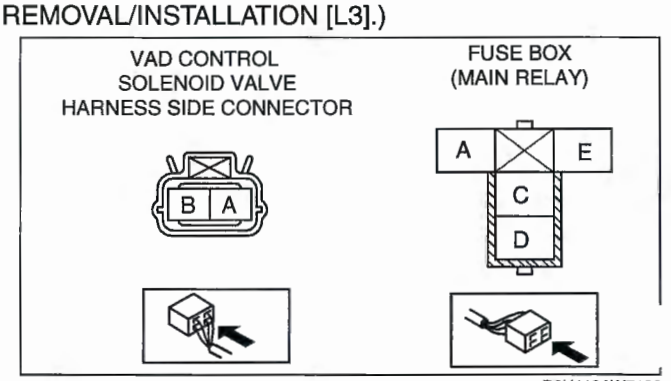

D6U113AW7100

Open circuit

- If there is no continuity, there is an open circuit. Repair or replace the harness.
  - — VAD control solenoid valve terminal B and PCM terminal 1K
  - — VAD control solenoid valve terminal A and main relay terminal C

Short circuit

- If there is continuity, there is a short circuit. Repair or replace the harness.
  - — VAD control solenoid valve terminal B and body GND
  - — VAD control solenoid valve terminal A and power supply

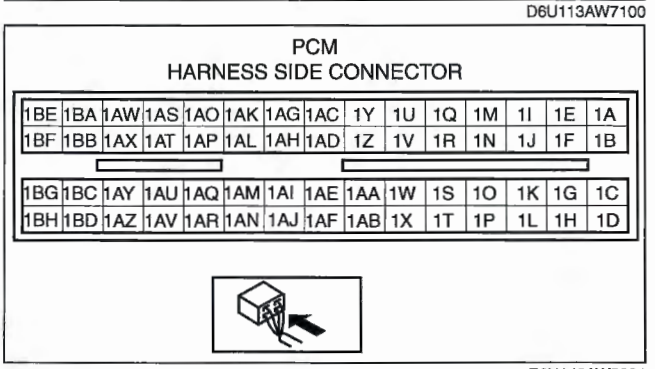

E6U140AW5991

VARIABLE AIR DUCT (VAD) CHECK VALVE (ONE-WAY) INSPECTION [L3]

E6U011342910W01

1. Remove the VAD check valve (one-way). (See 01–13A–4 INTAKE AIR SYSTEM REMOVAL/INSTALLATION [L3].)
2. Blow through A and verify that air flows from B.
3. Blow through B and verify that air does not flow from A.
   - If not as specified, replace the VAD check valve (one-way).

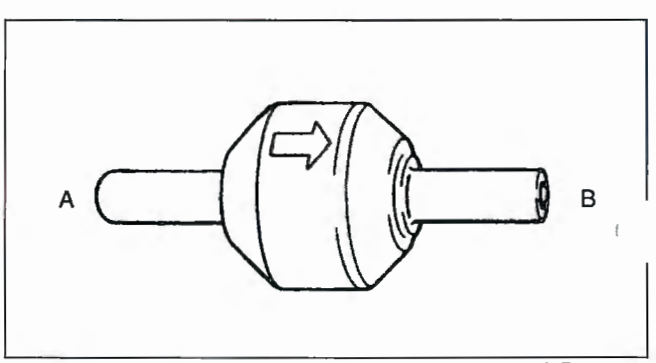

A6E3910W039

THROTTLE ACTUATOR INSPECTION [L3]

E6U011320663W01

Note
- Perform the following inspection only when directed.

Resistance Inspection
1. Disconnect the negative battery cable.
2. Disconnect the throttle body connector.
3. Measure the resistance between the throttle actuator terminals using an ohmmeter.
   - If not as specified, replace the throttle body. (See 01–13A–4 INTAKE AIR SYSTEM REMOVAL/INSTALLATION [L3].)
   - If as specified, carry out the "Circuit Open/Short Inspection".

Specification

Ambient temperature (°C {°F})	Resistance (ohm)
Approx. 20 {68}	0.3—100

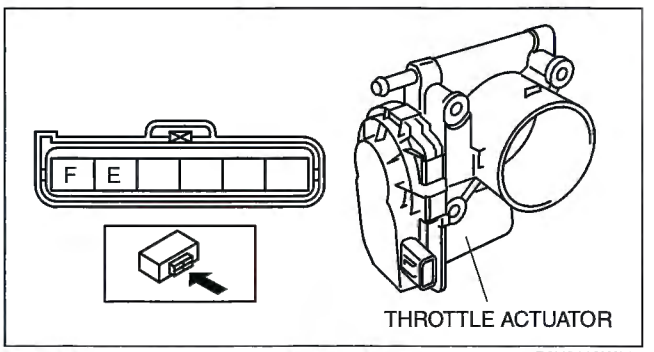

B6U0113W027

Circuit Open/Short Inspection
1. Disconnect the PCM connector. (See 01–40A–9 PCM REMOVAL/INSTALLATION [L3].)
2. Inspect the following wiring harnesses for open or short circuit (continuity check).

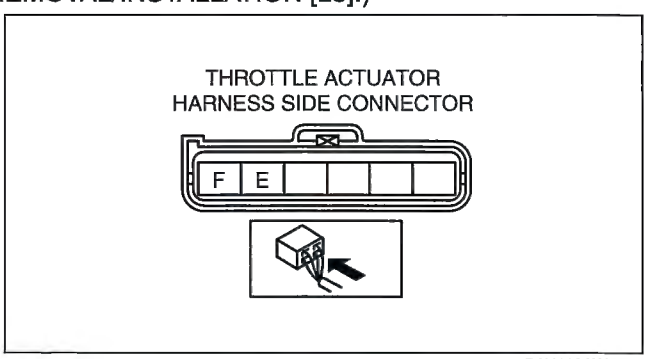

D6U113AW7102

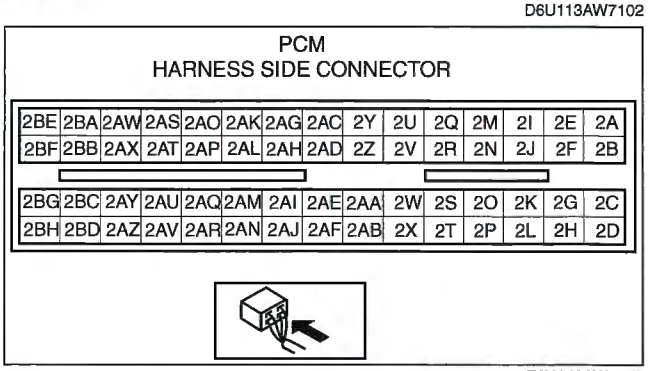

E6U140AW5992

Open circuit
- If there is no continuity, there is an open circuit. Repair or replace the harness.
  - — Throttle actuator terminal F and PCM terminal 2A
  - — Throttle actuator terminal E and PCM terminal 2B

Short circuit
- If there is continuity, there is a short circuit. Repair or replace the harness.
  - — Throttle actuator terminal F and power supply
  - — Throttle actuator terminal F and GND
  - — Throttle actuator terminal E and power supply
  - — Throttle actuator terminal E and GND

VARIABLE INTAKE AIR SHUTTER VALVE ACTUATOR INSPECTION [L3]

E6U011320132W01

1. Remove the air hose. (See 01–13A–4 INTAKE AIR SYSTEM REMOVAL/INSTALLATION [L3].)
2. Disconnect the vacuum hose from the Variable intake air solenoid valve.
3. Connect a vacuum pump to the Variable intake air shutter valve actuator.
4. Apply vacuum and verify that the rod moves.
   - If the rod does not move, replace the intake manifold.

Vacuum kPa {mmHg, inHg}	Rod movement
Below –2.7 {–20, –0.7}	Not move
Above –33.4 {–250, –9.9}	Fully pulled

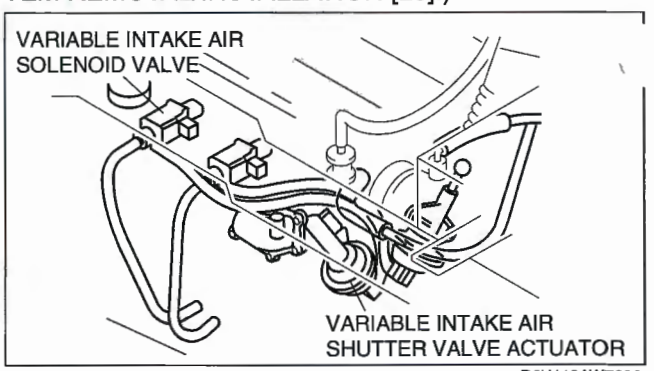

D6U113AW7003

VARIABLE INTAKE AIR SOLENOID VALVE INSPECTION [L3]

E6U011318740W01

1. Remove the Variable intake air solenoid valve. (See 01–13A–4 INTAKE AIR SYSTEM REMOVAL/INSTALLATION [L3].)
2. Inspect airflow between the ports under the following conditions.
   - If not as specified, replace the Variable intake air solenoid valve.
   - If as specified, carry out the "Circuit Open/Short Inspection".

○—○ : Continuity ○═○ : Airflow

Step	Terminal		Port		
	A	B	A	B	C
1	○—○			○—○	
2	B+	GND	○—○		

B6U0113W016

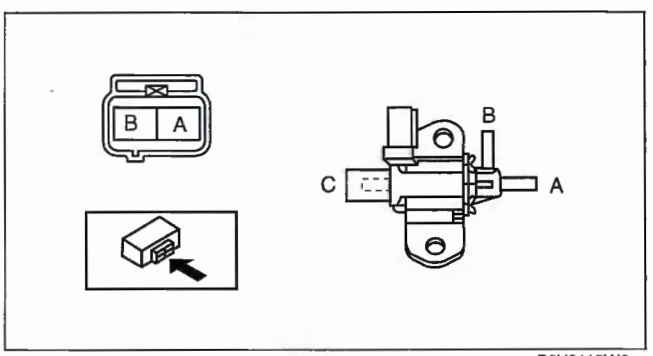

B6U0113W

Circuit Open/Short Inspection

1. Disconnect the PCM connector. (See 01–40A–9 PCM REMOVAL/INSTALLATION [L3].)
2. Inspect the following wiring harness for open or short circuit (continuity check).

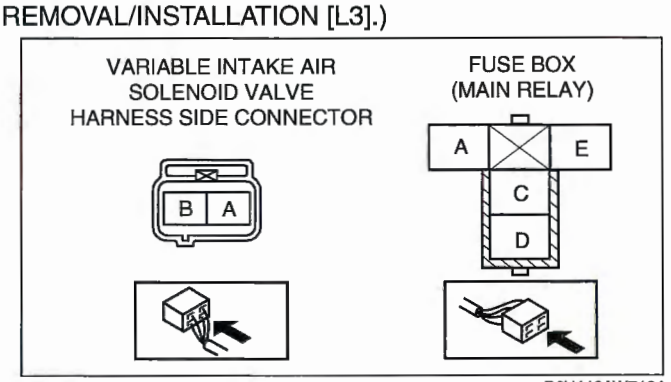

D6U113AW7104

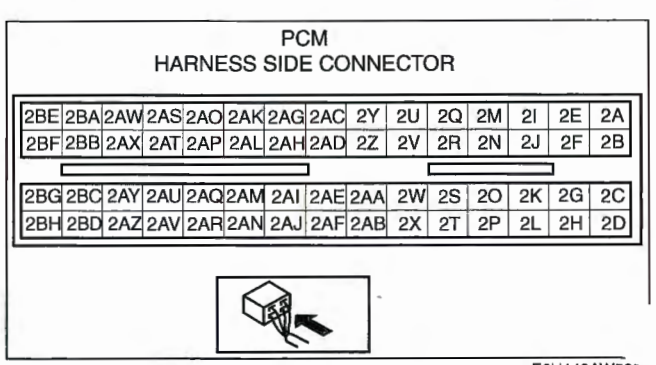

E6U140AW599

Open circuit

- If there is no continuity, there is an open circuit. Repair or replace the harness.
  - — Variable intake air solenoid valve terminal B and PCM terminal 2J
  - — Variable intake air solenoid valve terminal A and main relay terminal C

Short circuit

- If there is continuity, there is a short circuit. Repair or replace the harness.
  - — Variable intake air solenoid valve terminal B and body GND
  - — Variable intake air solenoid valve terminal A and power supply

VARIABLE TUMBLE SHUTTER VALVE ACTUATOR INSPECTION [L3]

E6U011320135W01

1. Remove the air hose. (See 01–13A–4 INTAKE AIR SYSTEM REMOVAL/INSTALLATION [L3].)
2. Disconnect the vacuum hose from the variable tumble solenoid valve.
3. Connect a vacuum pump to the Variable tumble shutter valve actuator.
4. Apply vacuum and verify that the rod moves.
   - If the rod does not move, replace the intake manifold.

Vacuum kPa {mmHg, inHg}	Rod movement
Below –2.7 {–20, –0.7}	Not move
Above –33.4 {–250, –9.9}	Fully pulled

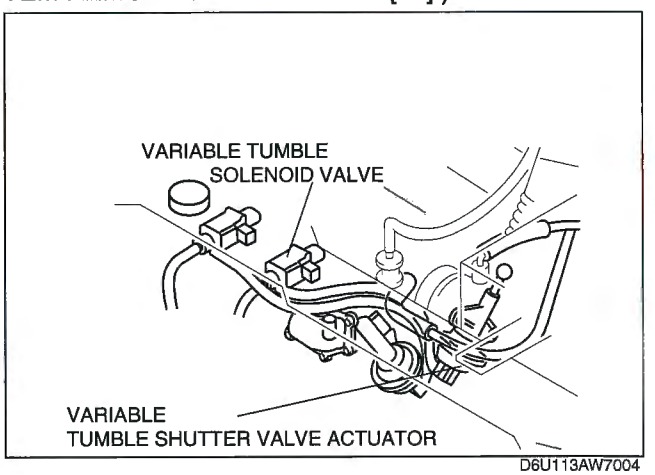

D6U113AW7004

VARIABLE TUMBLE SOLENOID VALVE INSPECTION [L3]

E6U011318745W01

1. Remove the variable tumble solenoid valve. (See 01–13A–4 INTAKE AIR SYSTEM REMOVAL/INSTALLATION [L3].)
2. Inspect airflow between the ports under the following conditions.
   - If not as specified, replace the variable tumble solenoid valve.
   - If as specified, carry out the "Circuit Open/ Short Inspection".

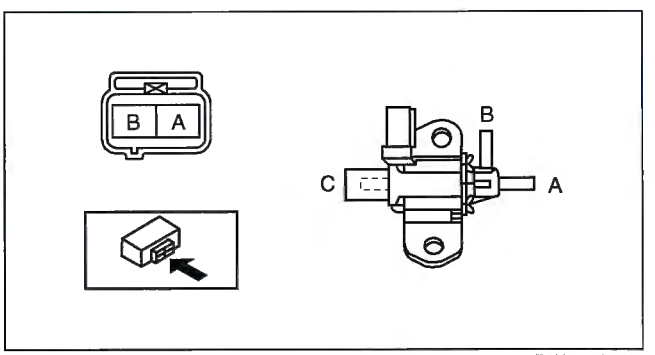

B6U0113W025

○—○ : Continuity ○═○ : Airflow

Step	Terminal		Port		
	A	B	A	B	C
1	○	○		○	○
2	B+	GND	○	○	

B6U0113W016

Circuit Open/Short Inspection

1. Disconnect the PCM connector. (See 01–40A–9 PCM REMOVAL/INSTALLATION [L3].)
2. Inspect the following wiring harness for open or short circuit (continuity check).

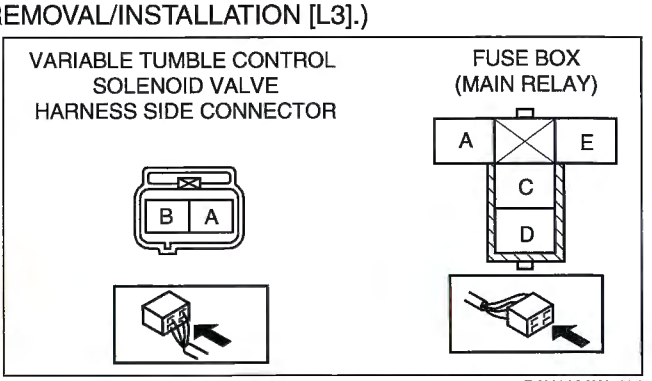

D6U113AW7106

Open circuit

- If there is no continuity, there is an open circuit. Repair or replace the harness.
  - — Variable tumble solenoid valve terminal B and PCM terminal 2I
  - — Variable tumble solenoid valve terminal A and main relay terminal C

Short circuit

If there is continuity, there is a short circuit. Repair or replace the harness.

- — Variable tumble solenoid valve terminal B and body GND
- — Variable tumble solenoid valve terminal A and power supply

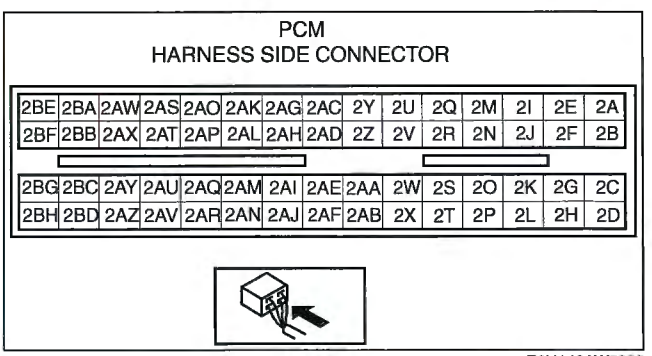

E6U140AW5992

ACCELERATOR PEDAL REMOVAL/INSTALLATION [L3]

E6U011341600W02

1. Remove in the order indicated in the table.
2. Install in the reverse order of removal.

1	Connector
2	Accelerator pedal

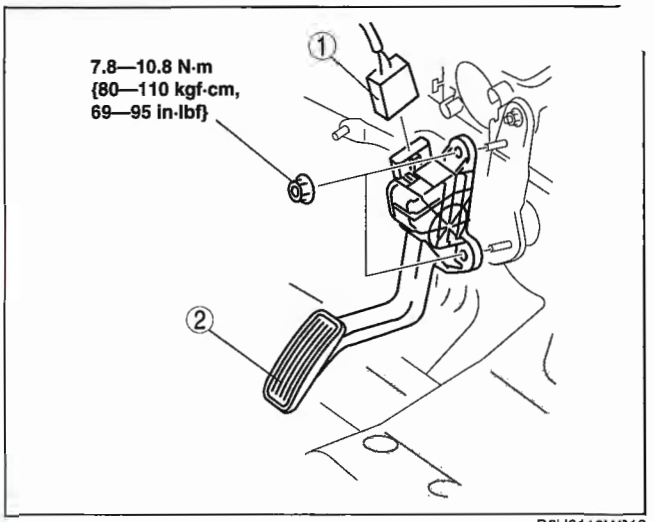

B6U0113W013

01–13B INTAKE-AIR SYSTEM [L3 WITH TC]

INTAKE AIR SYSTEM LOCATION INDEX [L3 WITH TC] 01–13B–2
INTAKE AIR SYSTEM FLOW DIAGRAM [L3 WITH TC] 01–13B–3
VACUUM HOSE ROUTING DIAGRAM [L3 WITH TC] 01–13B–4
INTAKE AIR SYSTEM REMOVAL/INSTALLATION [L3 WITH TC] 01–13B–4
Resonance Chamber Removal Note 01–13B–6
Charge Air Cooler Removal Note..... 01–13B–6
Throttle Body Removal Note 01–13B–6
Air Hose Removal Note 01–13B–6
Intake Manifold Removal Note..... 01–13B–7
Turbocharger Removal Note 01–13B–7
Turbocharger Installation Note..... 01–13B–8
Wastegate Control Solenoid Valve Installation Note..... 01–13B–9
Intake Manifold Installation Note 01–13B–9
Charge Air Cooler Installation Note..... 01–13B–10
Throttle Body Installation Note..... 01–13B–10
Air Cleaner Case Installation Note.... 01–13B–11
AIR CLEANER ELEMENT INSPECTION [L3 WITH TC] 01–13B–11
CHARGE AIR COOLER INSPECTION [L3 WITH TC] 01–13B–11
AIR BYPASS VALVE INSPECTION [L3 WITH TC] 01–13B–11
THROTTLE ACTUATOR INSPECTION [L3 WITH TC] 01–13B–12
Resistance Inspection.....01–13B–12
Circuit Open/Short Inspection.....01–13B–12
VARIABLE SWIRL SHUTTER VALVE ACTUATOR INSPECTION [L3 WITH TC] 01–13B–13
VARIABLE SWIRL SOLENOID VALVE INSPECTION [L3 WITH TC].....01–13B–13
Circuit Open/Short Inspection.....01–13B–13
WASTEGATE CONTROL SOLENOID VALVE INSPECTION [L3 WITH TC] ...01–13B–14
Circuit Open/Short Inspection.....01–13B–14
WASTEGATE ACTUATOR INSPECTION [L3 WITH TC] 01–13B–15
ACCELERATOR PEDAL REMOVAL/INSTALLATION [L3 WITH TC] 01–13B–15
TURBOCHARGER INSPECTION [L3 WITH TC] 01–13B–16
Compressor Wheel Inspection 01–13B–16
Turbine wheel inspection.....01–13B–16

INTAKE AIR SYSTEM LOCATION INDEX [L3 WITH TC]

E6U011300000W13

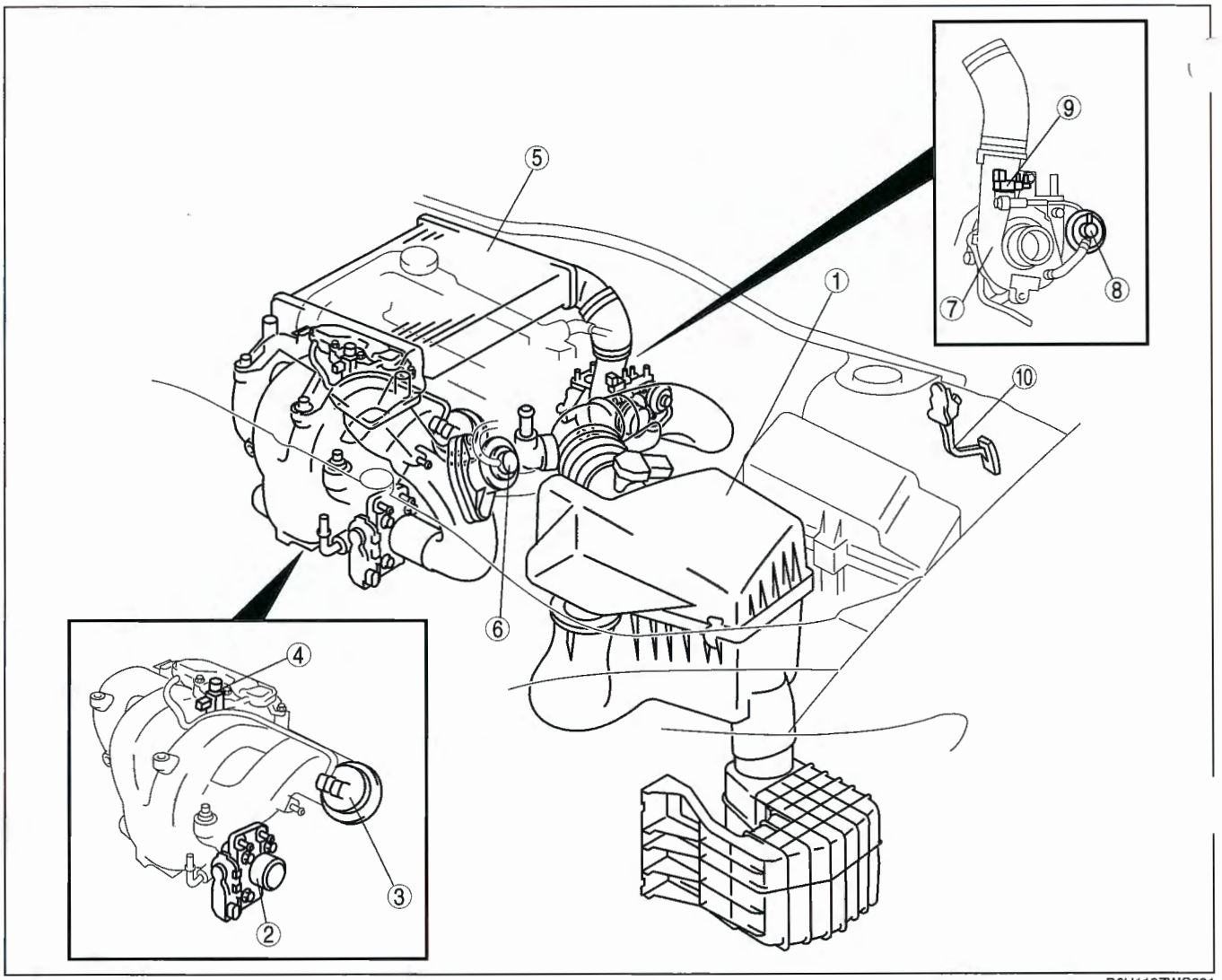

D6U113ZWC001

1	Air cleaner (See 01–13B–4 INTAKE AIR SYSTEM REMOVAL/ INSTALLATION [L3 WITH TC].) (See 01–13B–11 AIR CLEANER ELEMENT INSPECTION [L3 WITH TC].)
2	Throttle body (See 01–13B–4 INTAKE AIR SYSTEM REMOVAL/ INSTALLATION [L3 WITH TC].) (See 01–13B–12 THROTTLE ACTUATOR INSPECTION [L3 WITH TC].)
3	Variable swirl shutter valve actuator (See 01–13B–4 INTAKE AIR SYSTEM REMOVAL/ INSTALLATION [L3 WITH TC].) (See 01–13B–13 VARIABLE SWIRL SHUTTER VALVE ACTUATOR INSPECTION [L3 WITH TC].)
4	Variable swirl solenoid valve (See 01–13B–4 INTAKE AIR SYSTEM REMOVAL/ INSTALLATION [L3 WITH TC].) (See 01–13B–13 VARIABLE SWIRL SOLENOID VALVE INSPECTION [L3 WITH TC].)
5	Charge air cooler (See 01–13B–4 INTAKE AIR SYSTEM REMOVAL/ INSTALLATION [L3 WITH TC].) (See 01–13B–11 CHARGE AIR COOLER INSPECTION [L3 WITH TC].)

6	Air bypass valve (See 01–13B–11 AIR BYPASS VALVE INSPECTION [L3 WITH TC].)
7	Turbocharger (See 01–13B–4 INTAKE AIR SYSTEM REMOVAL/ INSTALLATION [L3 WITH TC].) (See 01–13B–16 TURBOCHARGER INSPECTION [L3 WITH TC].)
8	Wastegate actuator (See 01–13B–15 WASTEGATE ACTUATOR INSPECTION [L3 WITH TC].)
9	Wastegate control solenoid valve (See 01–13B–4 INTAKE AIR SYSTEM REMOVAL/ INSTALLATION [L3 WITH TC].) (See 01–13B–14 WASTEGATE CONTROL SOLENOID VALVE INSPECTION [L3 WITH TC].)
10	Accelerator pedal (See 01–13B–15 ACCELERATOR PEDAL REMOVAL/INSTALLATION [L3 WITH TC].) (See 01–40B–26 ACCELERATOR PEDAL POSITION (APP) SENSOR INSPECTION [L3 WIT TC].)

INTAKE AIR SYSTEM FLOW DIAGRAM [L3 WITH TC]

E6U011300000W14

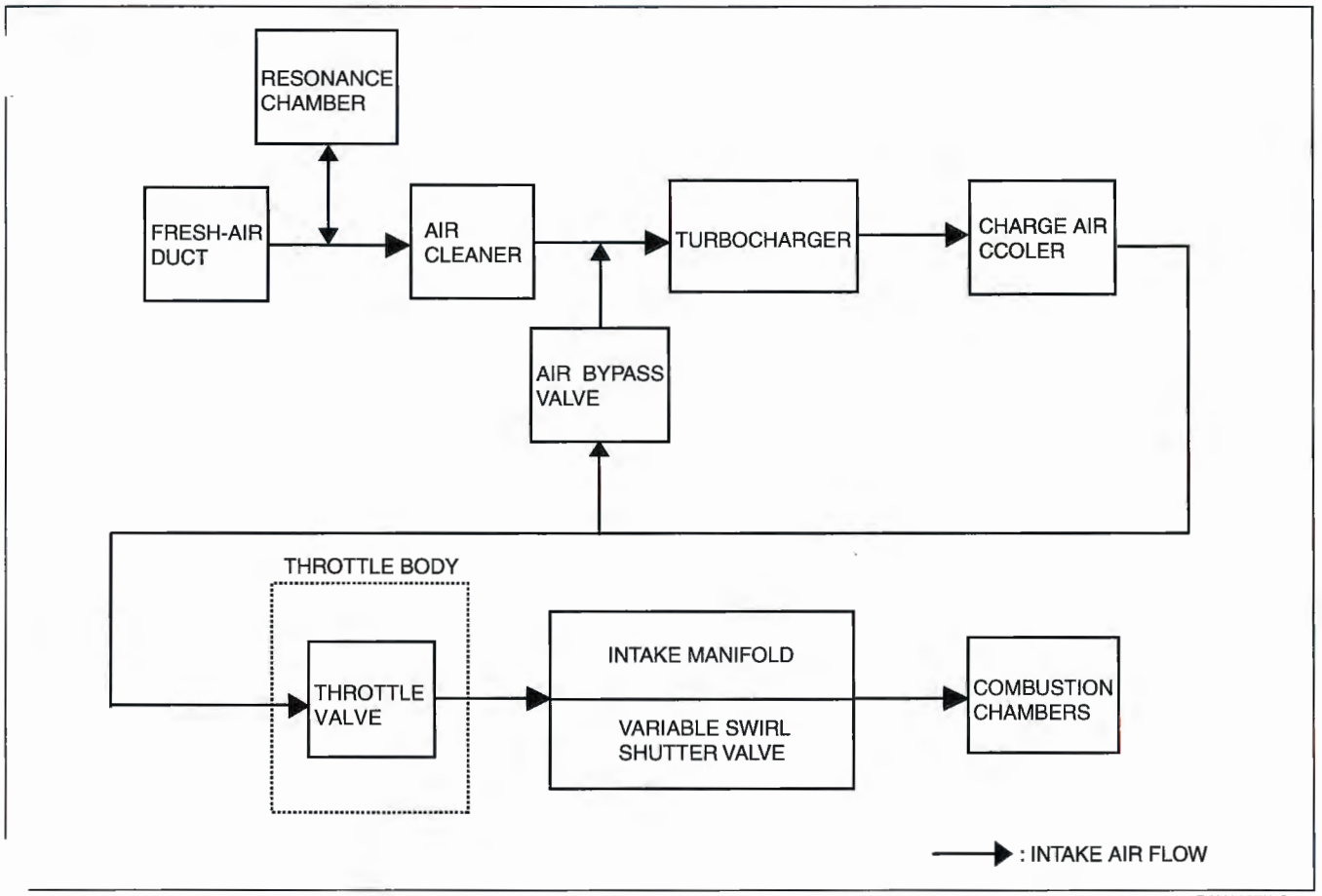

D6U113ZWC022

VACUUM HOSE ROUTING DIAGRAM [L3 WITH TC]

E6U011300000W15

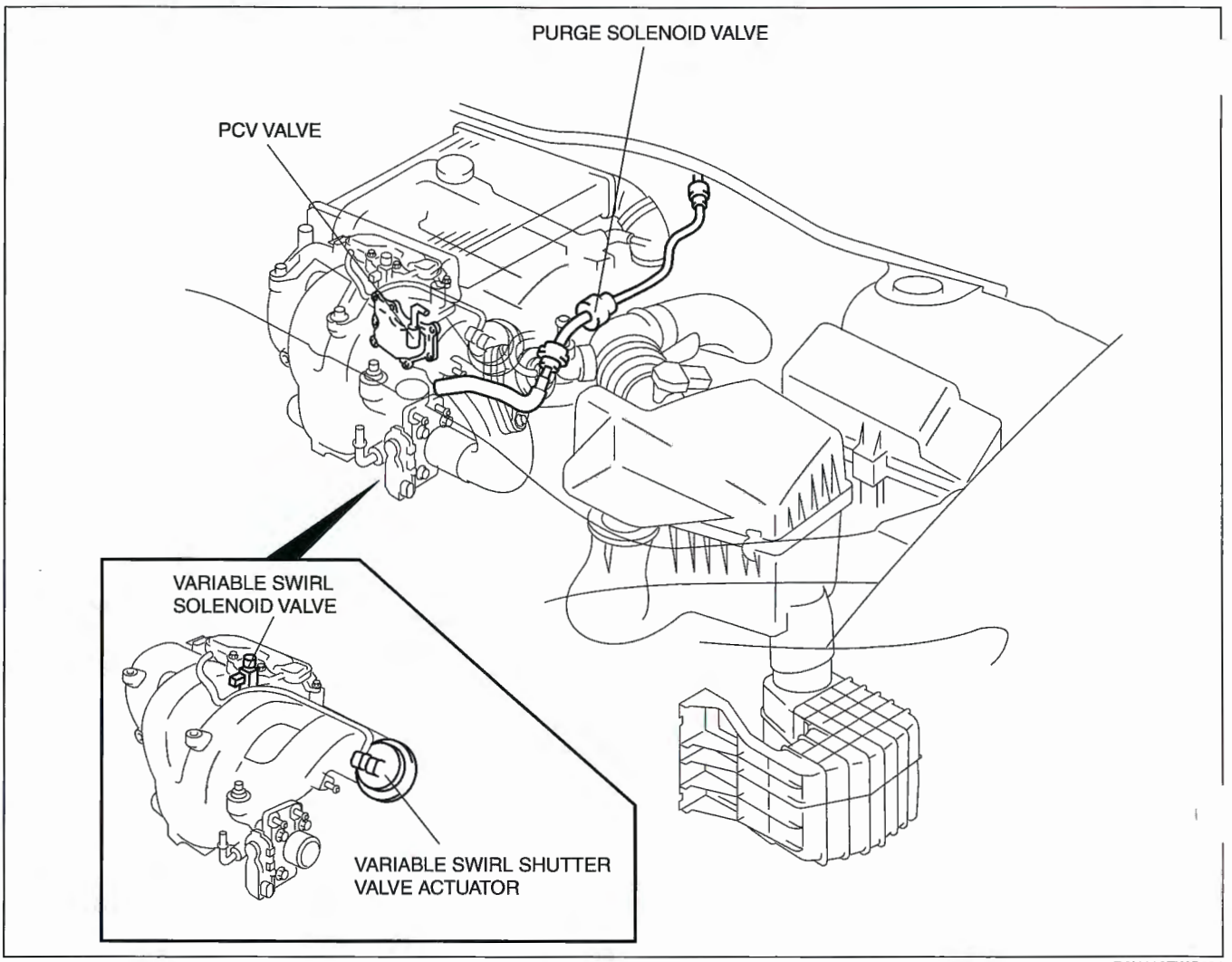

D6U113ZWC021

INTAKE AIR SYSTEM REMOVAL/INSTALLATION [L3 WITH TC]

E6U011300000W16

Warning

- **A hot engine and intake air system can cause severe burns. Turn off the engine and wait until they are cool before removing the intake air system.**
- **Fuel vapor is hazardous. It can easily ignite, causing serious injury and damage. Always keep sparks and flames away from fuel.**
- **Fuel line spills and leakage are dangerous. Fuel can ignite and cause serious injuries or death and damage. Fuel can also irritate skin and eyes. To prevent this, always complete the "Fuel Line Safety Procedure". (See 01–14B–4 BEFORE REPAIR PROCEDURE [L3 WITH TC].)**

1. Disconnect the negative battery cable.
2. Remove the charge air cooler cover.
3. Remove the battery and battery tray. (See 01–17B–2 BATTERY REMOVAL/INSTALLATION [L3 WITH TC].)
4. Remove in the order indicated in the table.
5. Install in the reverse order of removal.

6. Complete the "AFTER REPAIR PROCEDURE". (See 01–14B–5 AFTER REPAIR PROCEDURE [L3 WITH TC].)

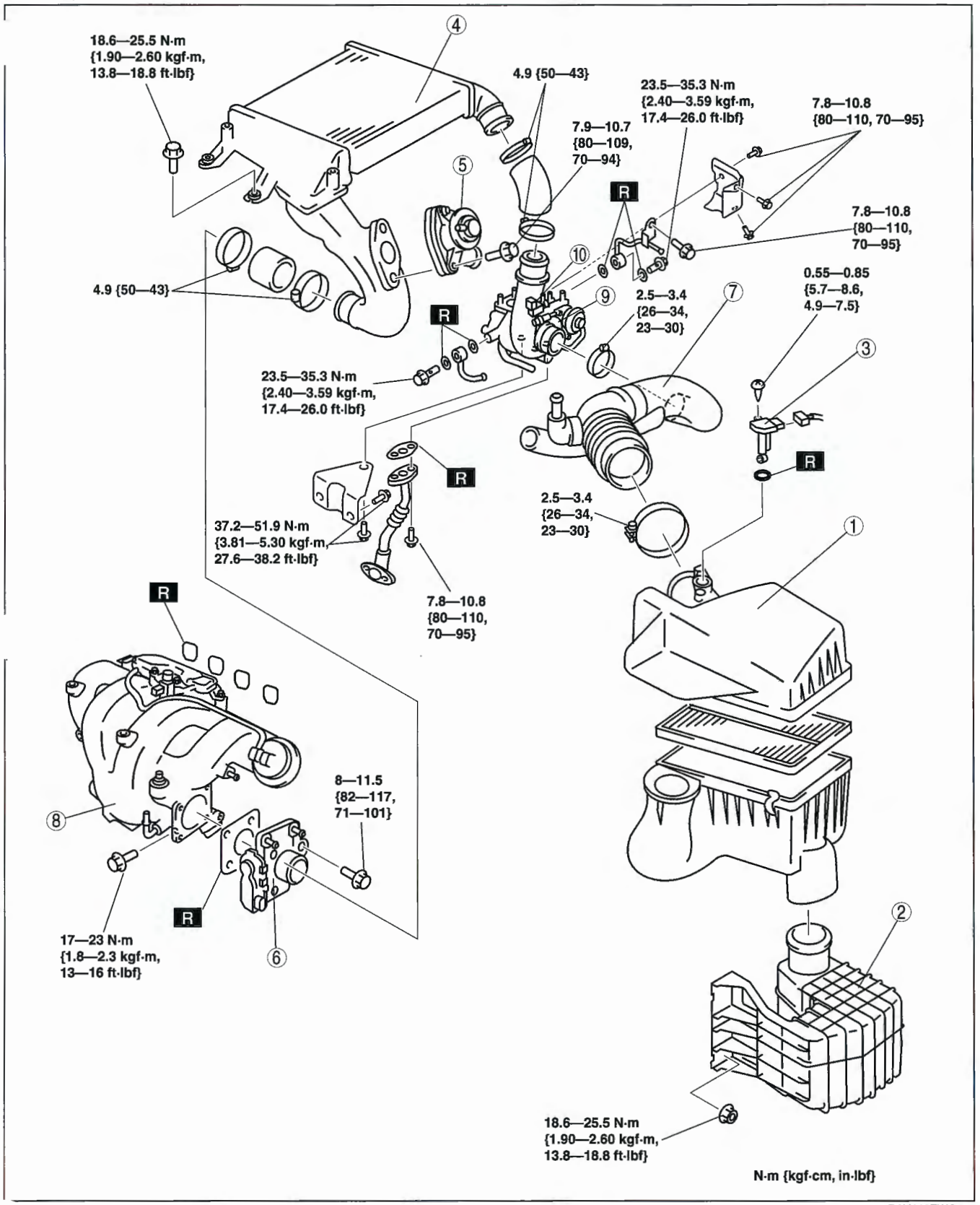

D6U113ZWC006

1	Air cleaner (See 01–13B–11 Air Cleaner Case Installation Note.)

2	Resonance chamber (See 01–13B–6 Resonance Chamber Removal Note.)
3	MAF/IAT sensor

4	Charge air cooler (See 01–13B–6 Charge Air Cooler Removal Note.) (See 01–13B–10 Charge Air Cooler Installation Note.)
5	Air bypass valve
6	Throttle body (See 01–13B–6 Throttle Body Removal Note.) (See 01–13B–10 Throttle Body Installation Note.)
7	Air hose (See 01–13B–6 Air Hose Removal Note.)
8	Intake manifold (See 01–13B–7 Intake Manifold Removal Note.) (See 01–13B–9 Intake Manifold Installation Note.)
9	Wastegate control solenoid valve (See 01–13B–9 Wastegate Control Solenoid Valve Installation Note.)
10	Turbocharger (See 01–13B–7 Turbocharger Removal Note.) (See 01–13B–8 Turbocharger Installation Note.)

Resonance Chamber Removal Note

1. Remove the front mudguard (LH) before removing the resonance chamber.

Charge Air Cooler Removal Note

1. Remove the duct.

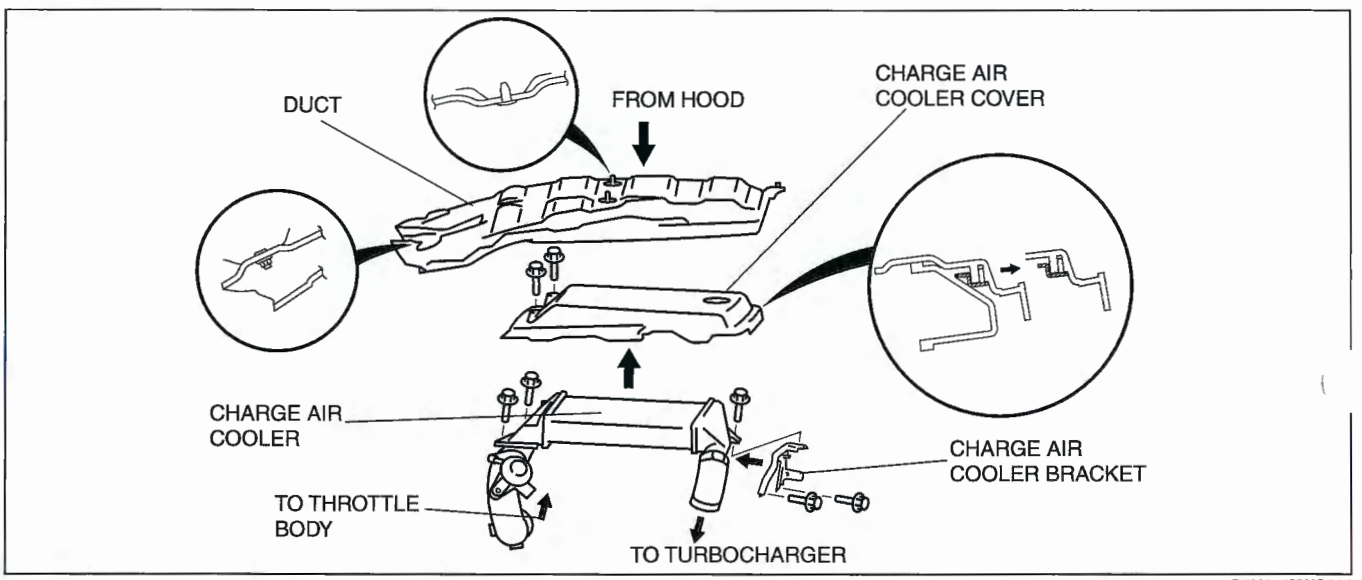

D6U113ZWC014

2. Remove the charge air cooler cover.
3. Remove the charge air cooler.
4. Remove the charge air cooler bracket.

Throttle Body Removal Note

1. Drain the engine coolant before removing the water hose. (See 01–12B–4 ENGINE COOLANT REPLACEMENT [L3 WITH TC].)
2. Remove the throttle body.

Air Hose Removal Note

1. Disconnect the EGR valve connector.
2. Remove the air hose.

Intake Manifold Removal Note

1. Remove the high pressure fuel pump bracket and the EGR pipe bracket.
2. Remove the fuel delivery pipe cover.
   Remove the oil level gauge pipe. (See 01–11B–5 OIL PAN REMOVAL/INSTALLATION [L3 WITH TC].)
4. Remove the drive belt. (See 01–10B–3 DRIVE BELT REPLACEMENT [L3 WITH TC].)
5. Set the power steering pump out of the way.
6. Remove the vacuum hose.
7. Remove the intake manifold.

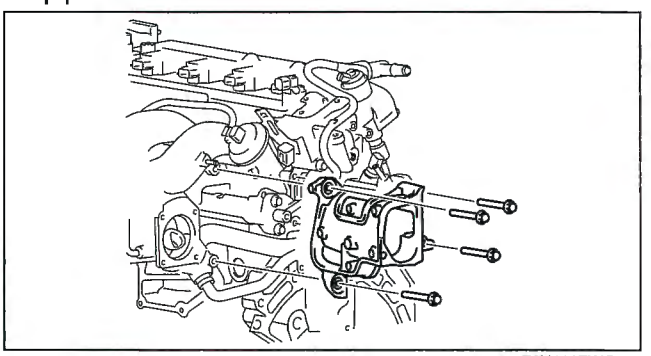

E6U113ZWC005

Turbocharger Removal Note

1. Remove the TWC. (See 01–15B–2 EXHAUST SYSTEM REMOVAL/INSTALLATION [L3 WITH TC].)
2. Disconnect the rear HO2S connector.
3. Remove the front pipe. (See 01–15B–2 EXHAUST SYSTEM REMOVAL/INSTALLATION [L3 WITH TC].)

Caution

- **When removing the cowl, a part or tool may hit the edge of the windshield and could damage it. Protect the windshield by covering it with a clean rag to prevent damage to the windshield.**

4. Remove the cowl and the insulator under the cowl. (See 09–16–4 COWL GRILLE REMOVAL/INSTALLATION [L3 WITH TC].)
5. Remove the insulator (Exhaust manifold upper side). (See 01–15B–2 EXHAUST SYSTEM REMOVAL/INSTALLATION [L3 WITH TC].)
6. Set the generator out of the way. (See 01–17B–4 GENERATOR REMOVAL/INSTALLATION [L3 WITH TC].)
7. Remove the insulator (Exhaust manifold lower side). (See 01–15B–2 EXHAUST SYSTEM REMOVAL/INSTALLATION [L3 WITH TC].)
8. Disconnect the front HO2S connector.
9. Remove the insulator (WU-TWC top side). (See 01–15B–2 EXHAUST SYSTEM REMOVAL/INSTALLATION [L3 WITH TC].)
10. Remove the vacuum hose (Brake master back side).
11. Remove the oil pipes.

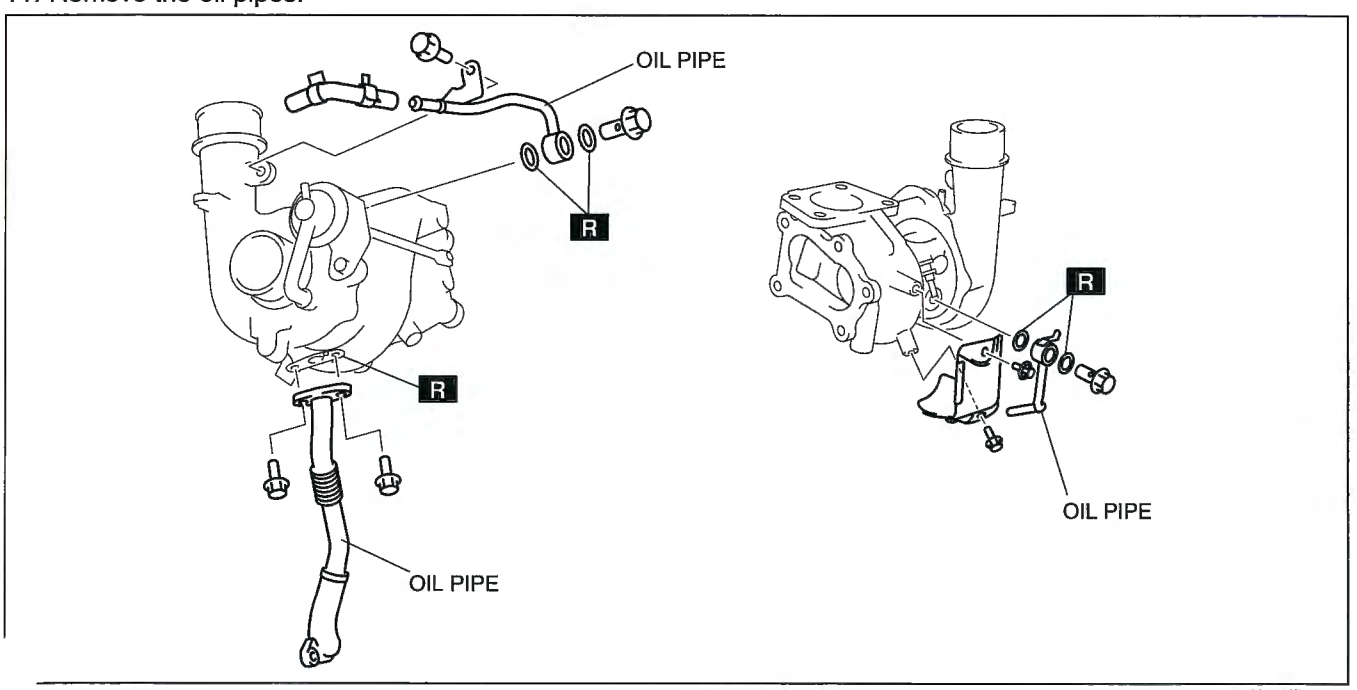

E6U113ZW6003

12. Remove the front HO2S. (See 01–15B–2 EXHAUST SYSTEM REMOVAL/INSTALLATION [L3 WITH TC].)
13. Remove the WU-TWC. (See 01–15B–2 EXHAUST SYSTEM REMOVAL/INSTALLATION [L3 WITH TC].)

14. Remove the turbocharger.

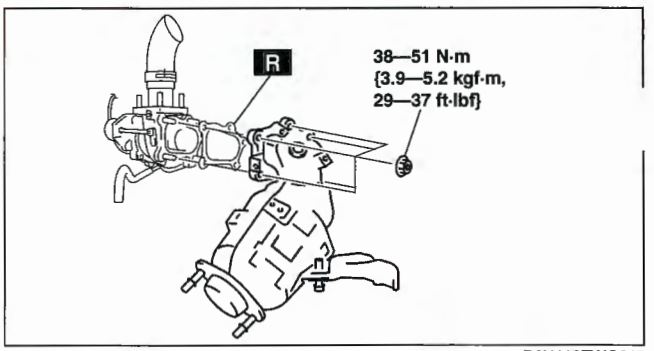

D6U113ZWC015

Turbocharger Installation Note

1. Install the turbocharger.

   Tightening torque
   38—51 N·m {3.9—5.2 kgf·m, 29—37 ft·lbf}

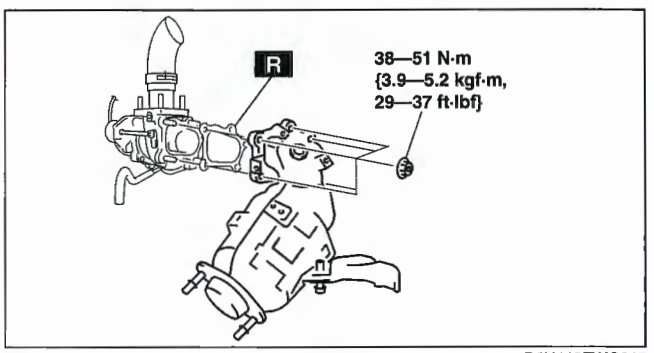

D6U113ZWC015

2. Install the WU-TWC. (See 01–15B–2 EXHAUST SYSTEM REMOVAL/INSTALLATION [L3 WITH TC].)
3. Install the front HO2S. (See 01–15B–2 EXHAUST SYSTEM REMOVAL/INSTALLATION [L3 WITH TC].)
4. Tight the oil pipe installation bolt while the stopper of the oil pipe is faced to the turbocharger.

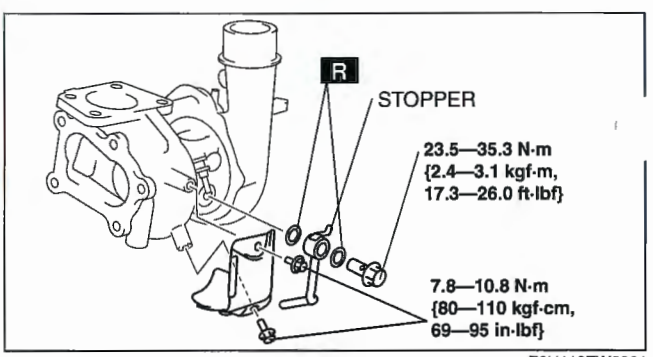

E6U113ZW6001

5. Install the oil pipes and, insert the oil hose until it reaches the stopper.

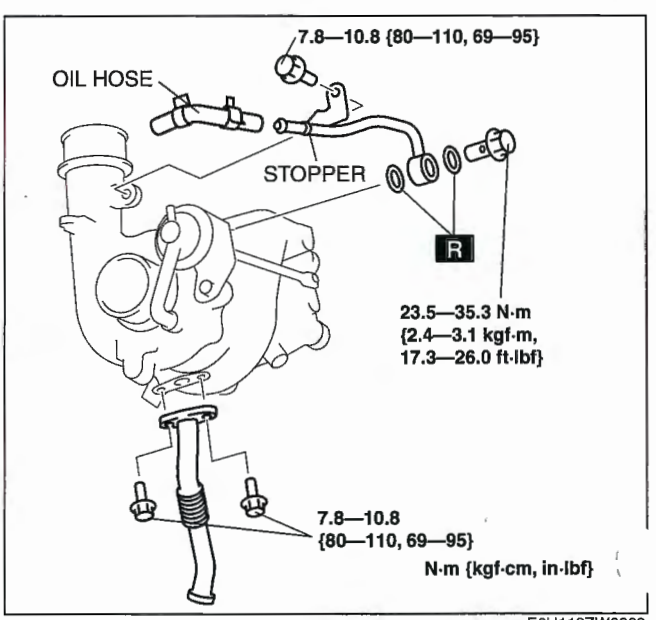

E6U113ZW6002

Wastegate Control Solenoid Valve Installation Note

1. Install the wastegate control solenoid valve.

Tightening torque
7.8—10.8 N·m {80—110 kgf·cm, 70—95 in·lbf}

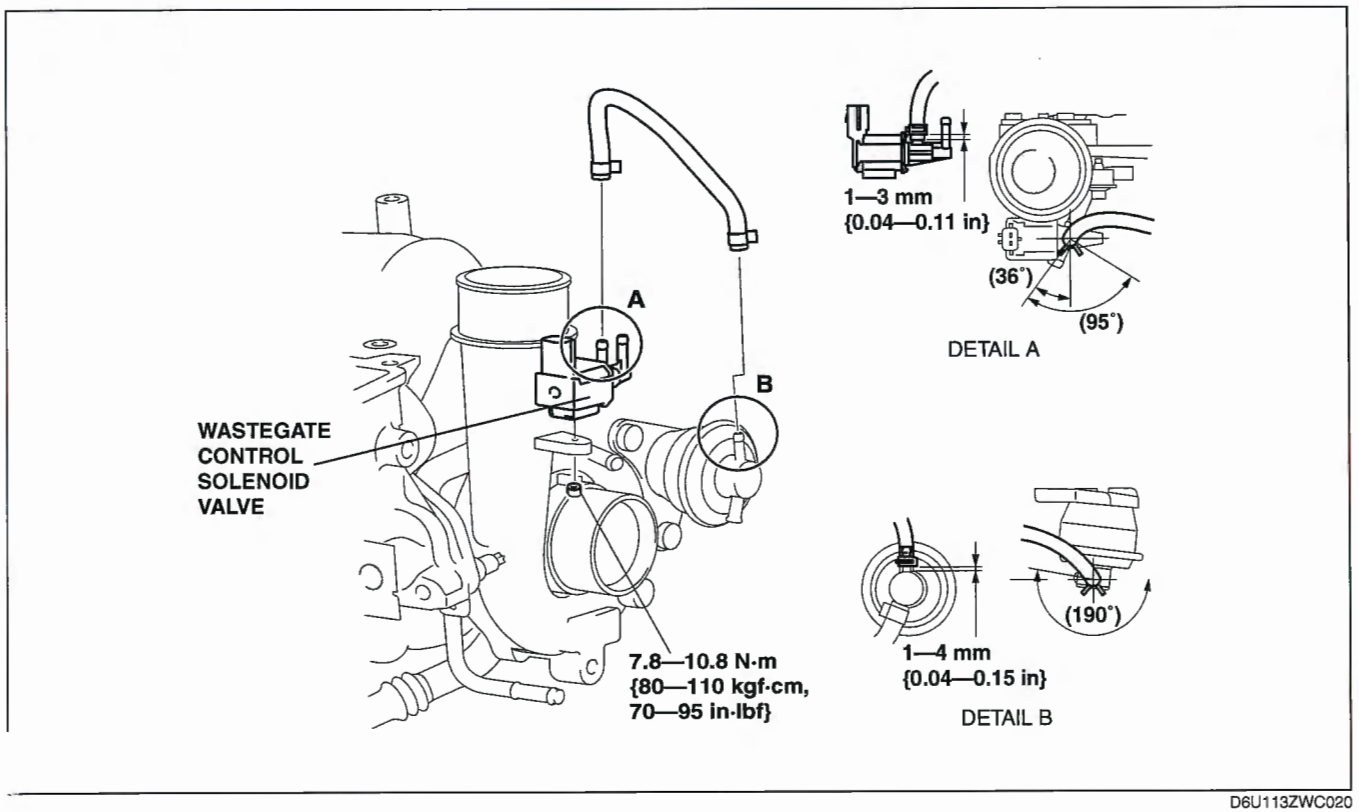

D6U113ZWC020

2. Install the hose as shown in the figure.

Intake Manifold Installation Note

1. Install the intake manifold.

Tightening torque
17—23 N·m {1.8—2.3 kgf·m, 13—16 ft·lbf}

2. Install the vacuum hose.
3. Install the drive belt.
4. Install the oil level gauge pipe. (See 01–11B–5 OIL PAN REMOVAL/INSTALLATION [L3 WITH TC].)
5. Install the fuel delivery pipe cover in the order in the figure.

Tightening torque
17—23 N·m {1.8—2.3 kgf·m, 13—16 ft·lbf}

6. Install the high pressure fuel pump bracket and the EGR pipe bracket.

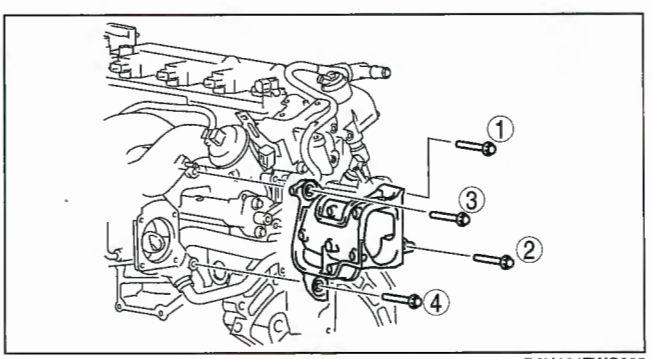

D6U114ZWC005

Charge Air Cooler Installation Note

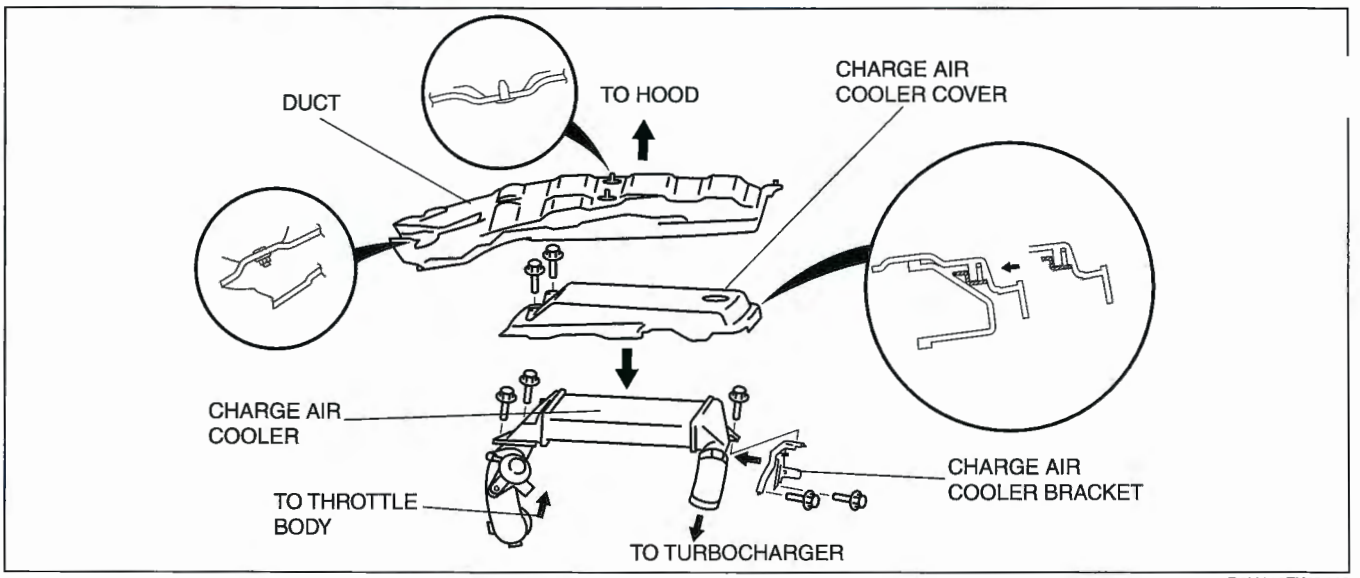

D6U113ZWC013

1. Install the charge air cooler bracket.

   Tightening torque
   42—48 N·m {4.3—2.8 kgf·m, 31—35 ft·lbf}

2. Install the charge air cooler.

   Tightening torque
   18.6—25.5 N·m {1.90—2.60 kgf·m, 13.8—18.8 ft·lbf}

3. install the charge air cooler cover.

   Caution
   - **When installing the charge air cooler cover, be careful not to damage the charge air cooler cover clips.**

   Tightening torque
   7.9—10.7 N·m {81—109 kgf·cm, 70—94 in·lbf}

4. install the duct.

Throttle Body Installation Note

1. Tighten the throttle body installation bolts in the order shown in the figure.

   Tightening torque
   8—11.5 N·m {82—117 kgf·cm, 71—101 in·lbf}

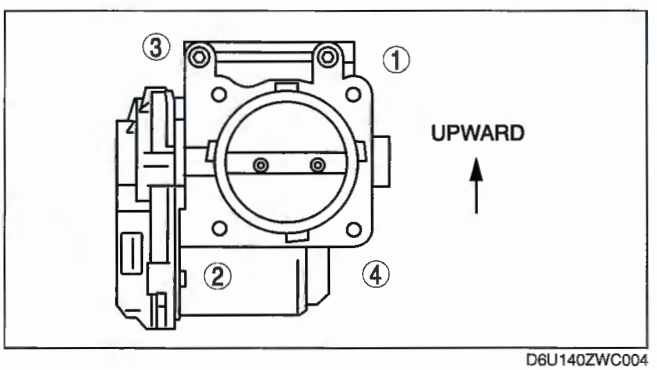

D6U140ZWC004

Air Cleaner Case Installation Note

Caution
- **Before assembling the air cleaner, verify that the rubber mounts have not fallen off from the air cleaner bracket (3 locations).**
- **Always install the air cleaner case using the following procedure.**

Note
- When inserting the rubber mounts into the air cleaner case, soapy water can be applied.

1. Verify that the rubber mounts are set in the air cleaner bracket (3 locations).
2. Install the projections on the frame side (2 locations).
3. Verify that the projections on the frame side are installed securely.
4. Install the projection on the engine side (remaining location).
5. Verify that the projection on the engine side installed securely.

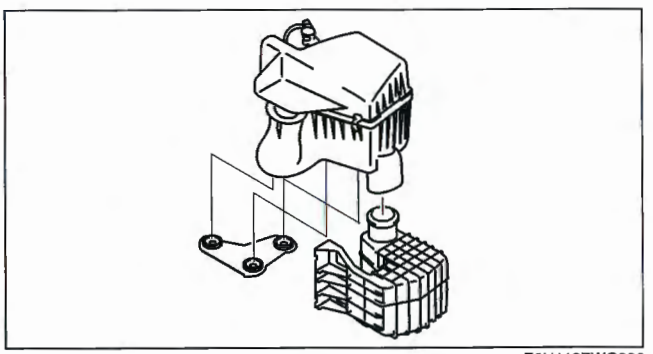

E6U113ZWC006

AIR CLEANER ELEMENT INSPECTION [L3 WITH TC]

E6U011313300W02

1. Remove the air cleaner element. (See 01–13B–4 INTAKE AIR SYSTEM REMOVAL/INSTALLATION [L3 WITH TC].)
2. Verify that the air cleaner element surface is free of dirt.
   - If there is dirt, use an air gun or similar tool to clean the element.
   - If the replacement time limit has passed, replace the element.

CHARGE AIR COOLER INSPECTION [L3 WITH TC]

E6U011313560W01

1. Remove the air bypass valve. (See 01–13B–4 INTAKE AIR SYSTEM REMOVAL/INSTALLATION [L3 WITH TC].)
2. Plug ports A and B.
3. Verify that there is no air leakage when air is sent from port C.
   - If there is leakage, replace the charge air cooler.

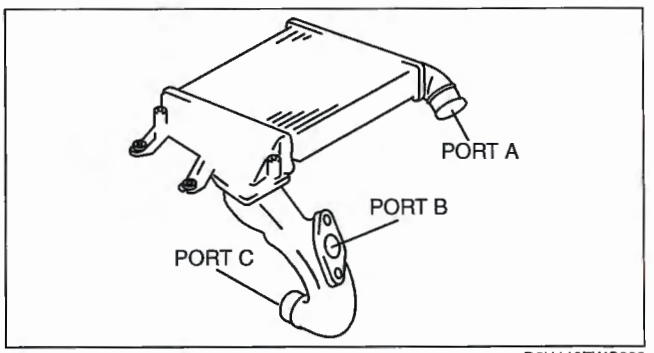

D6U113ZWC023

AIR BYPASS VALVE INSPECTION [L3 WITH TC]

E6U011300000W17

1. Remove the air bypass valve. (See 01–13B–4 INTAKE AIR SYSTEM REMOVAL/INSTALLATION [L3 WITH TC].)
2. Connect the vacuum pump to the vacuum ports of the air bypass valve.

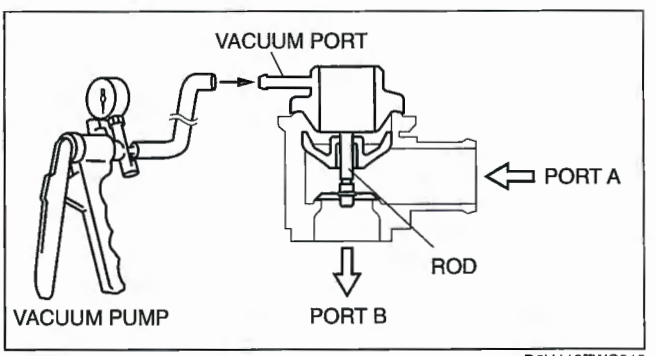

D6U113ZWC019

Approx value

3. Verify that the airflow is as indicated in the table.
   - If there is any malfunction, replace the air bypass valve.

Vacuum (kPa {mmHg, inHg})	Valve operation condition	Airflow between port A—B
–66 {–496, –20} or more	Open	Yes
–49 {–367, –14} or less	Closed	No

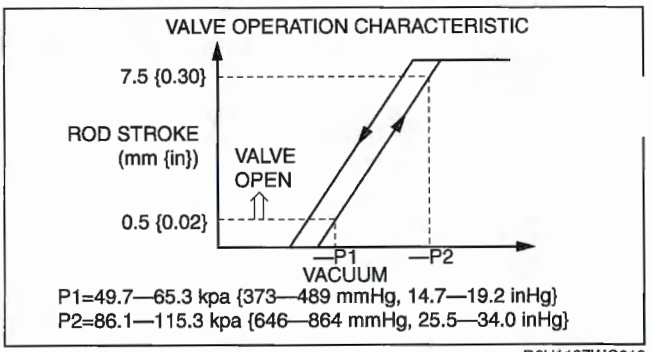

D6U113ZWC018

THROTTLE ACTUATOR INSPECTION [L3 WITH TC]

E6U011320663W02

Note

- Perform the following inspection only when directed.

Resistance Inspection

1. Disconnect the negative battery cable.
2. Disconnect the throttle body connector.
3. Measure the resistance between the throttle actuator terminals using a tester.
   - If not as specified, replace the throttle body. (See 01–13B–4 INTAKE AIR SYSTEM REMOVAL/INSTALLATION [L3 WITH TC].)
   - If as specified, carry out the "Circuit Open/Short Inspection".

Specification

Ambient temperature (°C {°F})	Resistance (ohm)
Approx. 20 {68}	0.3—100

Circuit Open/Short Inspection

1. Disconnect the PCM connector. (See 01–40B–6 PCM REMOVAL/INSTALLATION [L3 WITH TC].)
2. Inspect the following wiring harnesses for an open or short circuit (continuity check).

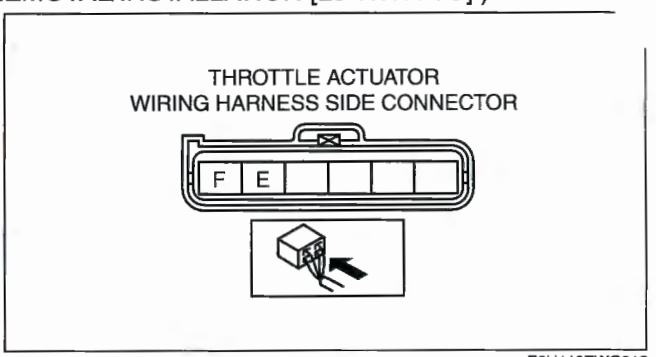

E6U113ZWC012

Open circuit

- If there is no continuity, there is an open circuit. Repair or replace the wiring harness.
  - — Throttle actuator terminal F and PCM terminal 4Y
  - — Throttle actuator terminal E and PCM terminal 4AB

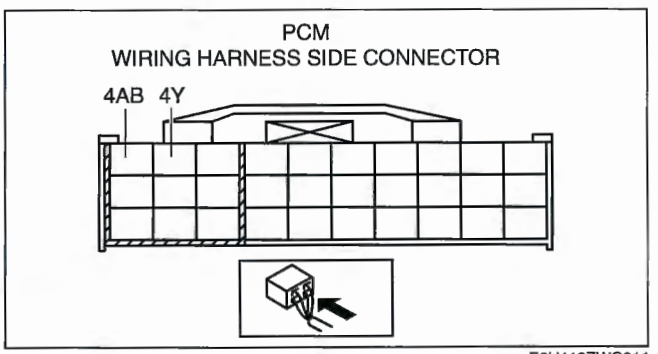

E6U113ZWC011

Short circuit

- If there is continuity, there is a short circuit. Repair or replace the wiring harness.
  - — Throttle actuator terminal F and power supply
  - — Throttle actuator terminal F and ground
  - — Throttle actuator terminal E and power supply
  - — Throttle actuator terminal E and ground

VARIABLE SWIRL SHUTTER VALVE ACTUATOR INSPECTION [L3 WITH TC]

E6U011320135W02

1. Remove the air hose. (See 01–13B–4 INTAKE AIR SYSTEM REMOVAL/INSTALLATION [L3 WITH TC].)
2. Disconnect the vacuum hose from the variable swirl control solenoid valve.
   Connect a vacuum pump to the variable swirl shutter valve actuator.
3. Apply vacuum and verify that the rod moves.
   - If the rod does not move, replace the intake manifold. (See 01–13B–4 INTAKE AIR SYSTEM REMOVAL/INSTALLATION [L3 WITH TC].)

Vacuum kPa {mmHg, inHg}	Rod movement
–2.7 {–20, –0.7} or less	Not move
–33.4 {–250, –9.9} or more	Fully pulled

VARIABLE SWIRL SOLENOID VALVE INSPECTION [L3 WITH TC]

E6U011318745W02

1. Remove the variable swirl solenoid valve. (See 01–13B–4 INTAKE AIR SYSTEM REMOVAL/INSTALLATION [L3 WITH TC].)
2. Inspect the airflow between the ports under the following conditions.
   - If not as specified, replace the variable swirl control solenoid valve.
   - If as specified, carry out the "Circuit Open/Short Inspection".

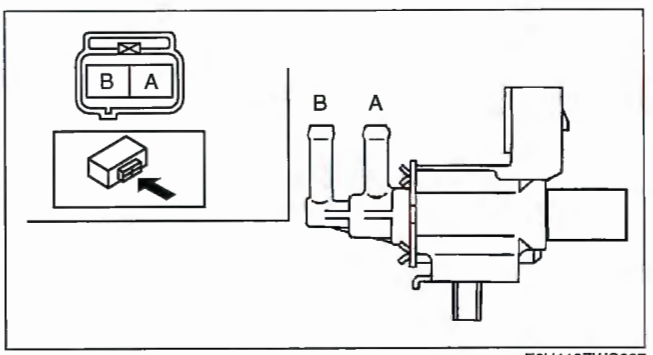

E6U113ZWC007

○—○ : Continuity ○═○ : Airflow

Step	Terminal		Port	
	A	B	A	B
1	○—○			
2	B+	GND	○═○	

B6U0116W014

Circuit Open/Short Inspection

1. Disconnect the PCM connector. (See 01–40B–6 PCM REMOVAL/INSTALLATION [L3 WITH TC].)
2. Inspect the following wiring harness for open or short circuit (continuity check).

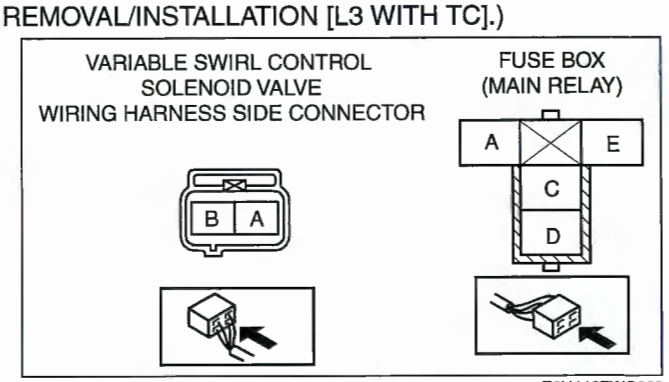

E6U113ZWC003

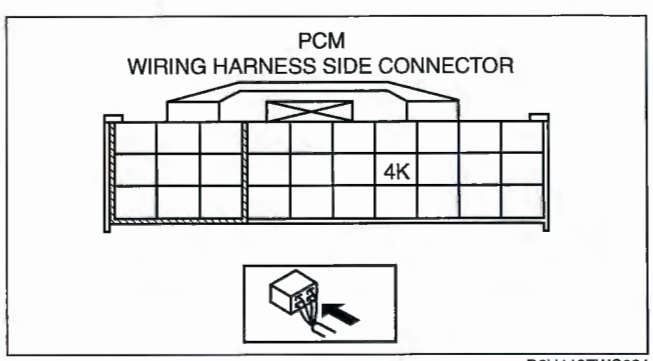

D6U113ZWC024

Open circuit

- If there is no continuity, there is an open circuit. Repair or replace the wiring harness.
  - — Variable swirl control solenoid valve terminal B and PCM terminal 4K
  - — Variable swirl control solenoid valve terminal A and main relay terminal C

Short circuit

- If there is continuity, there is a short circuit. Repair or replace the wiring harness.
  - — Variable swirl control solenoid valve terminal B and body ground
  - — Variable swirl control solenoid valve terminal A and power supply

WASTEGATE CONTROL SOLENOID VALVE INSPECTION [L3 WITH TC]

E6U011313240W01

1. Remove the wastegate control solenoid valve. (See 01–13B–4 INTAKE AIR SYSTEM REMOVAL/INSTALLATION [L3 WITH TC].)
2. Inspect the airflow between the ports under the following conditions.
   - If not as specified, replace the wastegate control solenoid valve.
   - If as specified, carry out the "Circuit Open/Short Inspection".

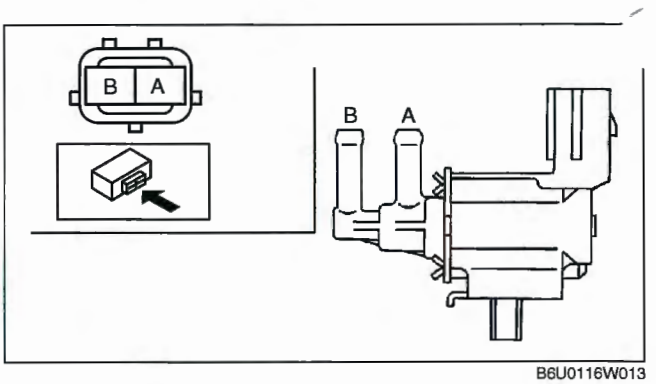

B6U0116W013

O—O : Continuity O═O : Airflow

Step	Terminal		Port	
	A	B	A	B
1	O—O			
2	B+	GND	O═O	

B6U0116W014

Circuit Open/Short Inspection

1. Disconnect the PCM connector. (See 01–40B–6 PCM REMOVAL/INSTALLATION [L3 WITH TC].)
2. Inspect the following wiring harness for an open or short circuit (continuity check).

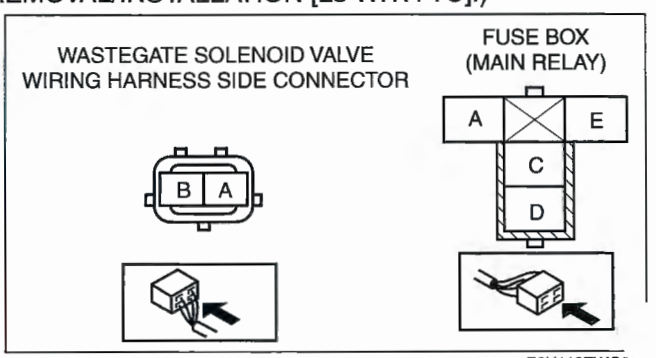

E6U113ZWC00

Open circuit

- If there is no continuity, there is an open circuit. Repair or replace the wiring harness.
  - — Variable swirl solenoid valve terminal B and PCM terminal 4H
  - — Variable swirl solenoid valve terminal A and main relay terminal C

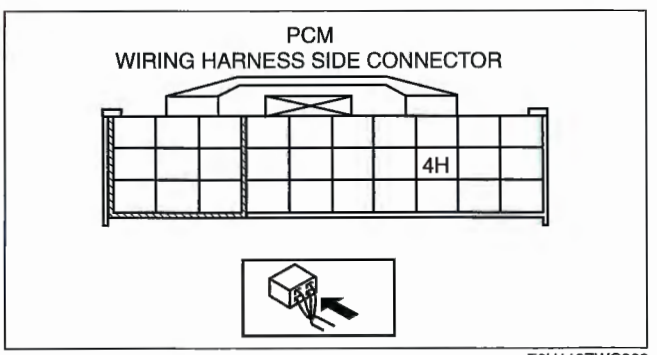

E6U113ZWC002

Short circuit

- If there is continuity, there is a short circuit. Repair or replace the wiring harness.
  - — Variable swirl solenoid valve terminal B and body ground
  - — Variable swirl solenoid valve terminal A and power supply

WASTEGATE ACTUATOR INSPECTION [L3 WITH TC]

E6U011313240W02

1. Remove the air hose. (See 01–13B–4 INTAKE AIR SYSTEM REMOVAL/INSTALLATION [L3 WITH TC].)
2. Disconnect the hose from the wastegate actuator.
3. Plug the wastegate actuator as shown in the figure.
4. Connect the **SST** to the port.

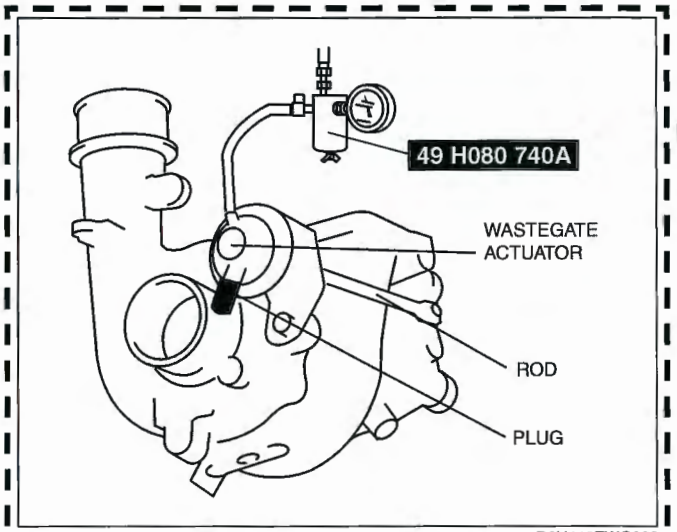

D6U113ZWC026

5. Raise the pressure slowly and take a measurement of the pressure when the rod stroke is **1.5 mm {0.06 in}**.
   - If the rod does not move, replace the turbocharger.

Specification (rod stroke: 1.5 mm {0.06 in})
78.0—83.4 kPa {586—625 mmHg, 23.1—24.6 inHg}

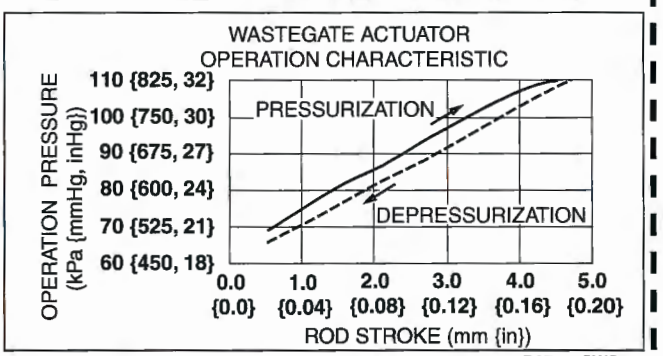

D6E113CWS955

ACCELERATOR PEDAL REMOVAL/INSTALLATION [L3 WITH TC]

E6U011341600W03

1. Remove in the order indicated in the table.

1	Connector
2	Accelerator pedal

2. Install in the reverse order of removal.

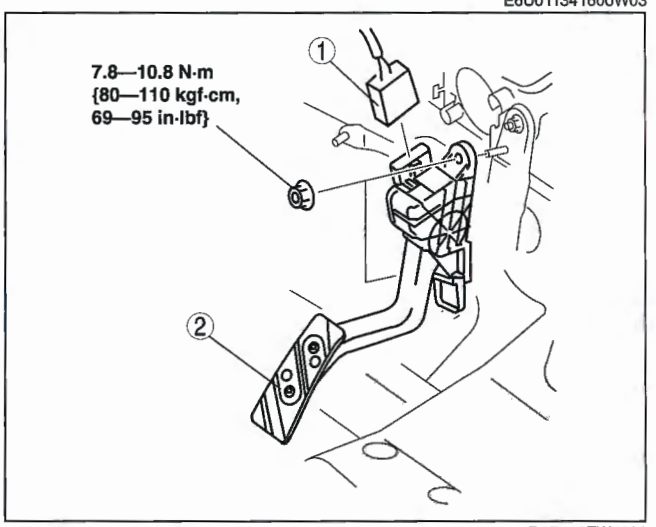

D6E113ZW7301

TURBOCHARGER INSPECTION [L3 WITH TC]

E6U011313700W01

Compressor Wheel Inspection

1. Remove the turbocharger. (See 01–13B–4 INTAKE AIR SYSTEM REMOVAL/INSTALLATION [L3 WITH TC].)
2. Visually inspect the compressor wheel from view A for the cracks, damage, or bending on all the compressor wheel blades.
   - If there are any cracks or damage, replace the turbocharger.

Note

- If there is contact between the compressor wheel and compressor housing, there may be cracks, damage, or bending on the blade end area.
- If there are cracks, damage, or bending on the compressor wheel, verify the following after replacing the turbocharger.
  - — Intake air/exhaust system related components
  - — Oil pipe damage

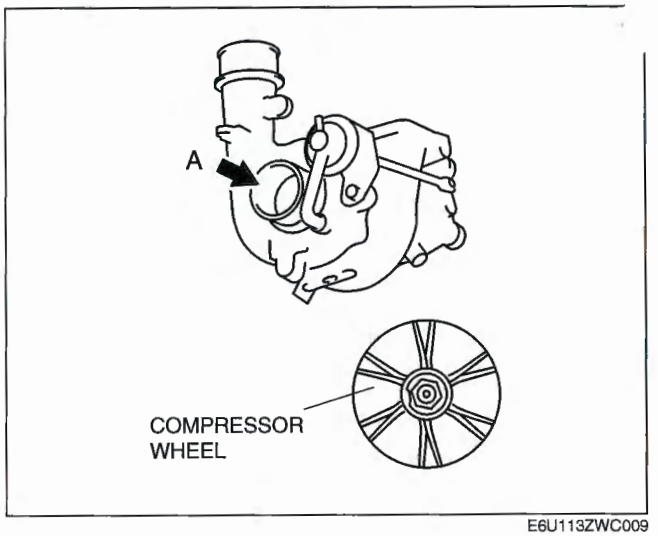

E6U113ZWC009

Turbine wheel inspection

1. Remove the turbocharger. (See 01–13B–4 INTAKE AIR SYSTEM REMOVAL/INSTALLATION [L3 WITH TC].)
2. Visually inspect the turbine wheel from view B for the cracks, damage, or bending on all the turbine wheel blades.
   - If there are cracks, damage, or bending on the turbine wheel, replace the turbocharger.

Note

- If there is contact between the turbine wheel and turbine housing, there may be cracks, damage, or bending on the blade end area.
- If there are cracks, damage, or bending on the turbine wheel, verify the following after replacing the turbocharger.
  - — Intake air/exhaust system related components
  - — Oil pipe damage

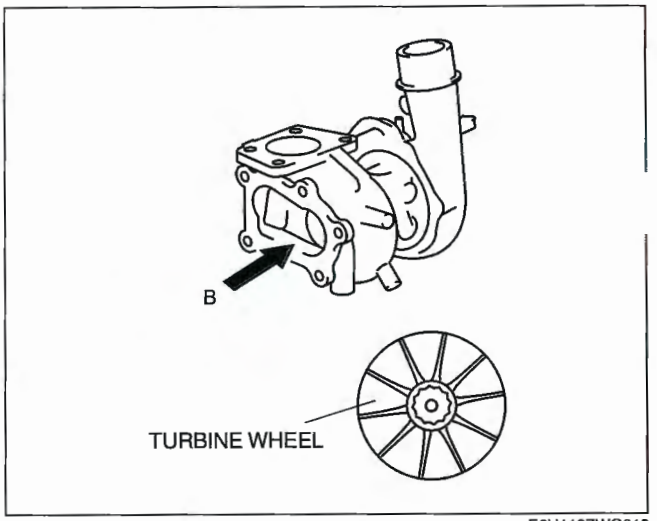

E6U113ZWC010

01–13C INTAKE-AIR SYSTEM [AJ]

INTAKE AIR SYSTEM LOCATION INDEX [AJ] 01–13C–1
INTAKE AIR SYSTEM FLOW DIAGRAM [AJ] 01–13C–2
VACUUM HOSE ROUTING DIAGRAM [AJ] 01–13C–2
INTAKE AIR SYSTEM REMOVAL/INSTALLATION [AJ]..... 01–13C–2
Resonance Chamber Removal Note 01–13C–4
Water Hose Removal Note..... 01–13C–4
Intake Manifold Installation Note 01–13C–4
Dynamic Chamber Installation Note .. 01–13C–4
AIR CLEANER ELEMENT INSPECTION [AJ] 01–13C–4
VARIABLE AIR DUCT (VAD) SHUTTER VALVE INSPECTION [AJ] 01–13C–4
VARIABLE AIR DUCT (VAD) CONTROL SOLENOID VALVE INSPECTION [AJ].....01–13C–5
Circuit Open/Short Inspection.....01–13C–5
VARIABLE AIR DUCT (VAD) CHECK VALVE (ONE-WAY) INSPECTION [AJ].....01–13C–6
THROTTLE ACTUATOR INSPECTION [AJ].....01–13C–6
Visual Inspection.....01–13C–6
Continuity Inspection.....01–13C–6
Circuit Open/Short Inspection.....01–13C–7
ACCELERATOR PEDAL REMOVAL/INSTALLATION [AJ] 01–13C–7

INTAKE AIR SYSTEM LOCATION INDEX [AJ]

E6U011300000W01

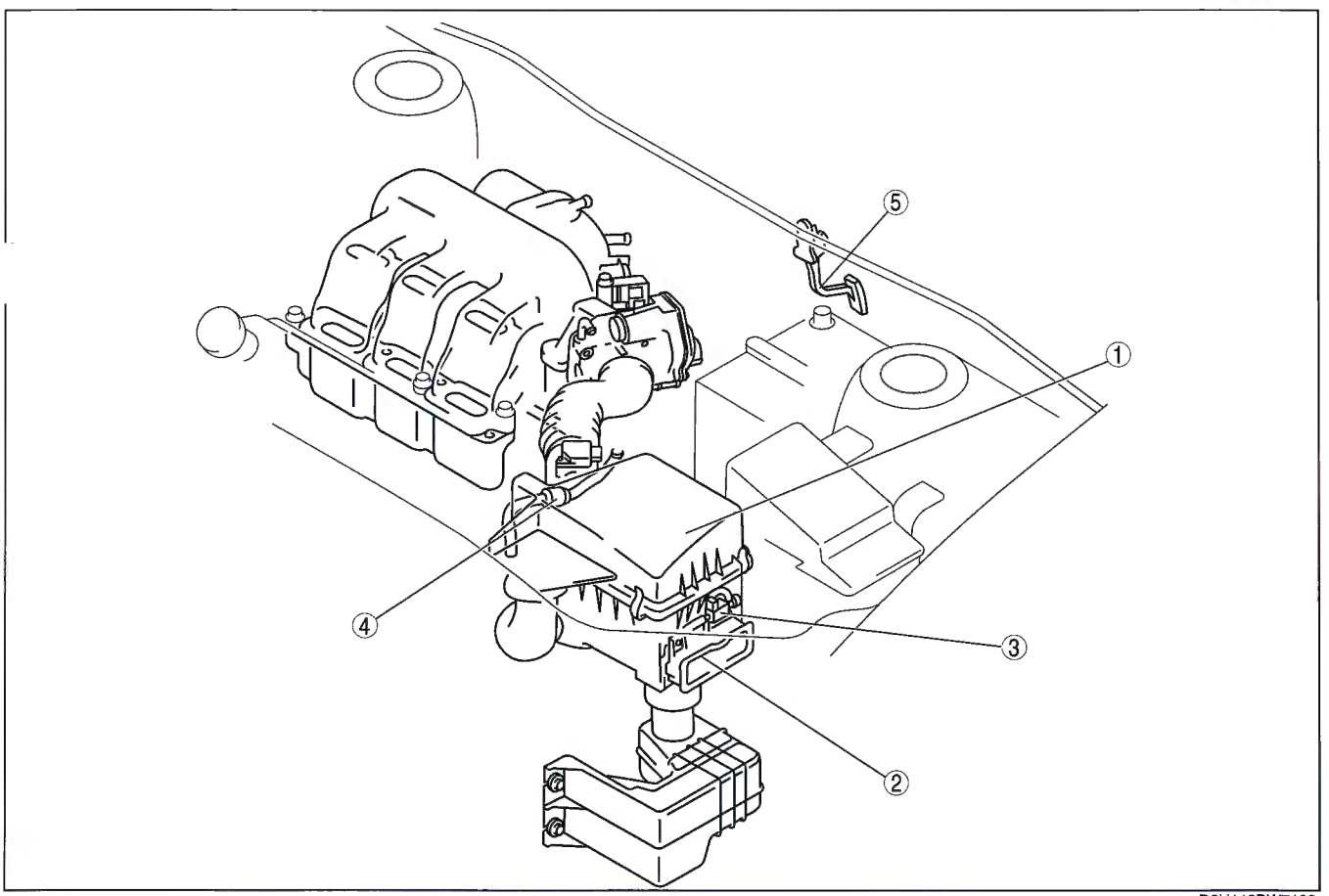

D6U113BW7102

1	Air cleaner (See 01–13C–4 AIR CLEANER ELEMENT INSPECTION [AJ])
2	VAD shutter valve (See 01–13C–4 VARIABLE AIR DUCT (VAD) SHUTTER VALVE INSPECTION [AJ])
3	VAD control solenoid valve (See 01–13C–5 VARIABLE AIR DUCT (VAD) CONTROL SOLENOID VALVE INSPECTION [AJ])
4	VAD check valve (one-way) (See 01–13C–6 VARIABLE AIR DUCT (VAD) CHECK VALVE (ONE-WAY) INSPECTION [AJ])
5	Accelerator pedal (See 01–13C–7 ACCELERATOR PEDAL REMOVAL/INSTALLATION [AJ])

INTAKE AIR SYSTEM FLOW DIAGRAM [AJ]

E6U011300000W02

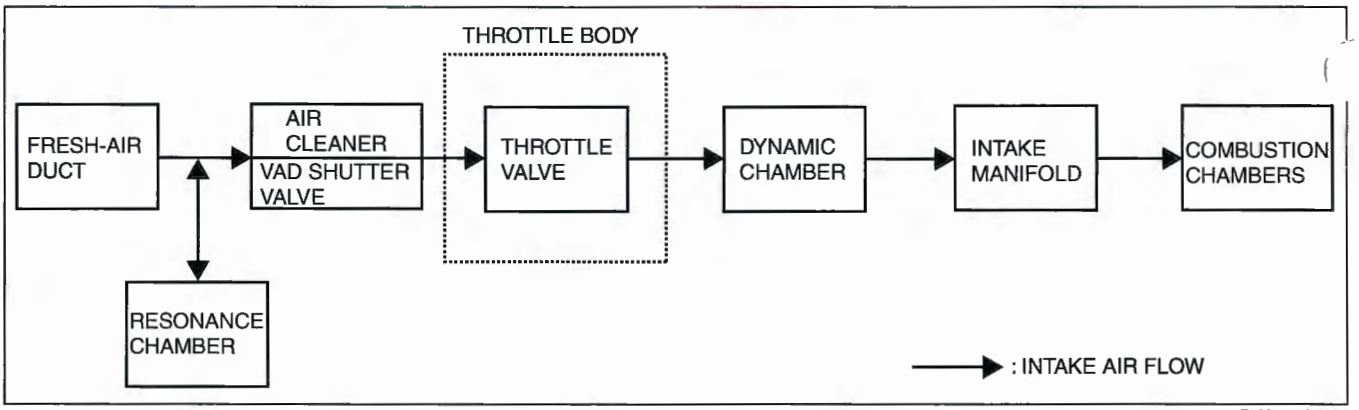

B6U0113W001

VACUUM HOSE ROUTING DIAGRAM [AJ]

E6U011300000W03

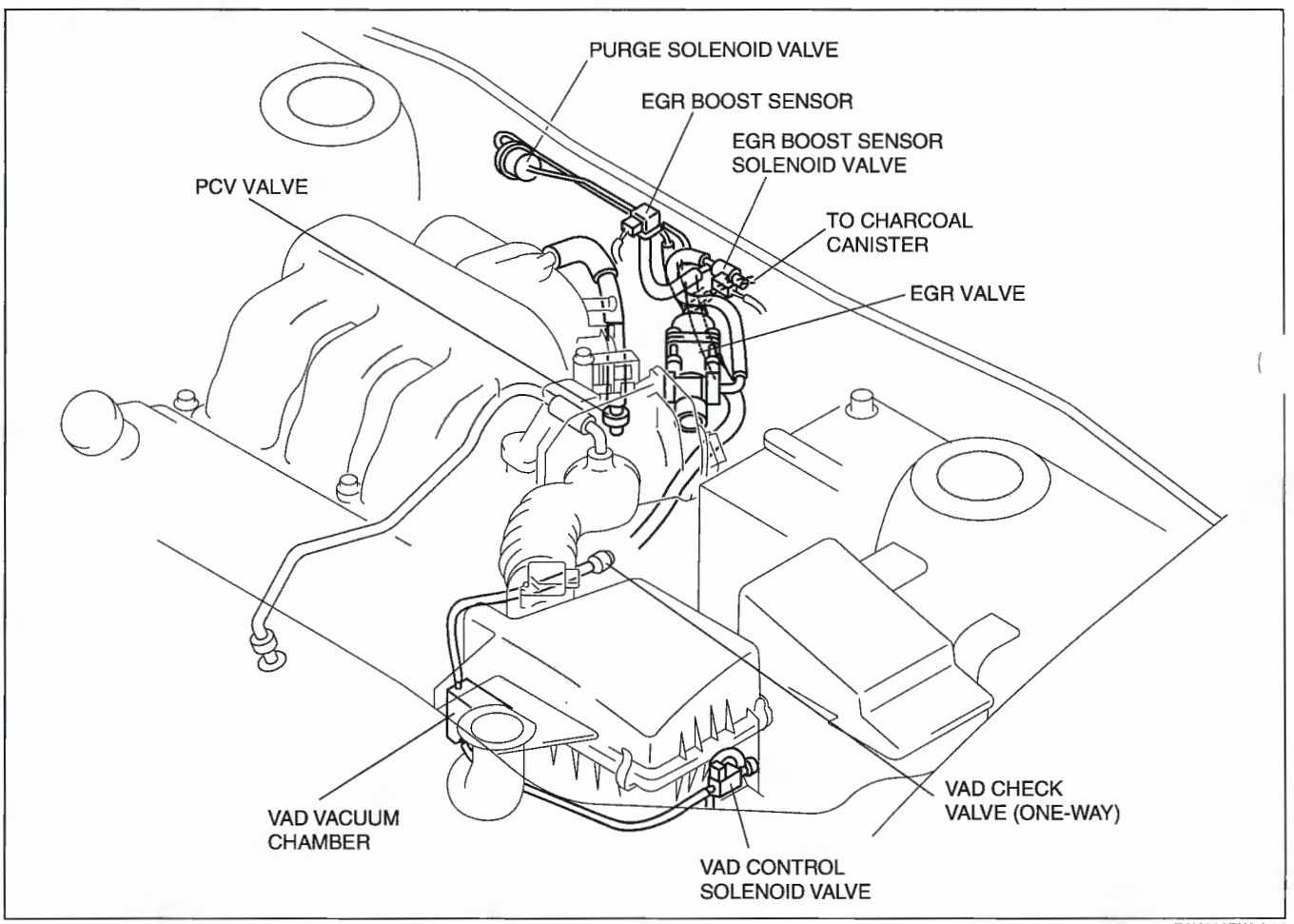

E6U113BW5L04

INTAKE AIR SYSTEM REMOVAL/INSTALLATION [AJ]

E6U011300000W04

Warning

- **When the engine and intake air system are hot, they can badly burn. Turn off the engine and wait until they are cool before removing the intake air system.**
- **Fuel vapor is hazardous. It can easily ignite, causing serious injury and damage. Always keep sparks and flames away from fuel.**
- **Fuel line spills and leakage are dangerous. Fuel can ignite and cause serious injuries or death and damage. Fuel can also irritate skin and eyes. To prevent this, always complete the "Fuel Line Safety Procedure". (See 01–14A–6 BEFORE REPAIR PROCEDURE [L3, AJ].)**

1. Disconnect the negative battery cable.
2. Drain the engine coolant. (See 01–12A–5 ENGINE COOLANT REPLACEMENT [L3, AJ].)
3. Remove in the order indicated in the table.
   Install in the reverse order of removal.

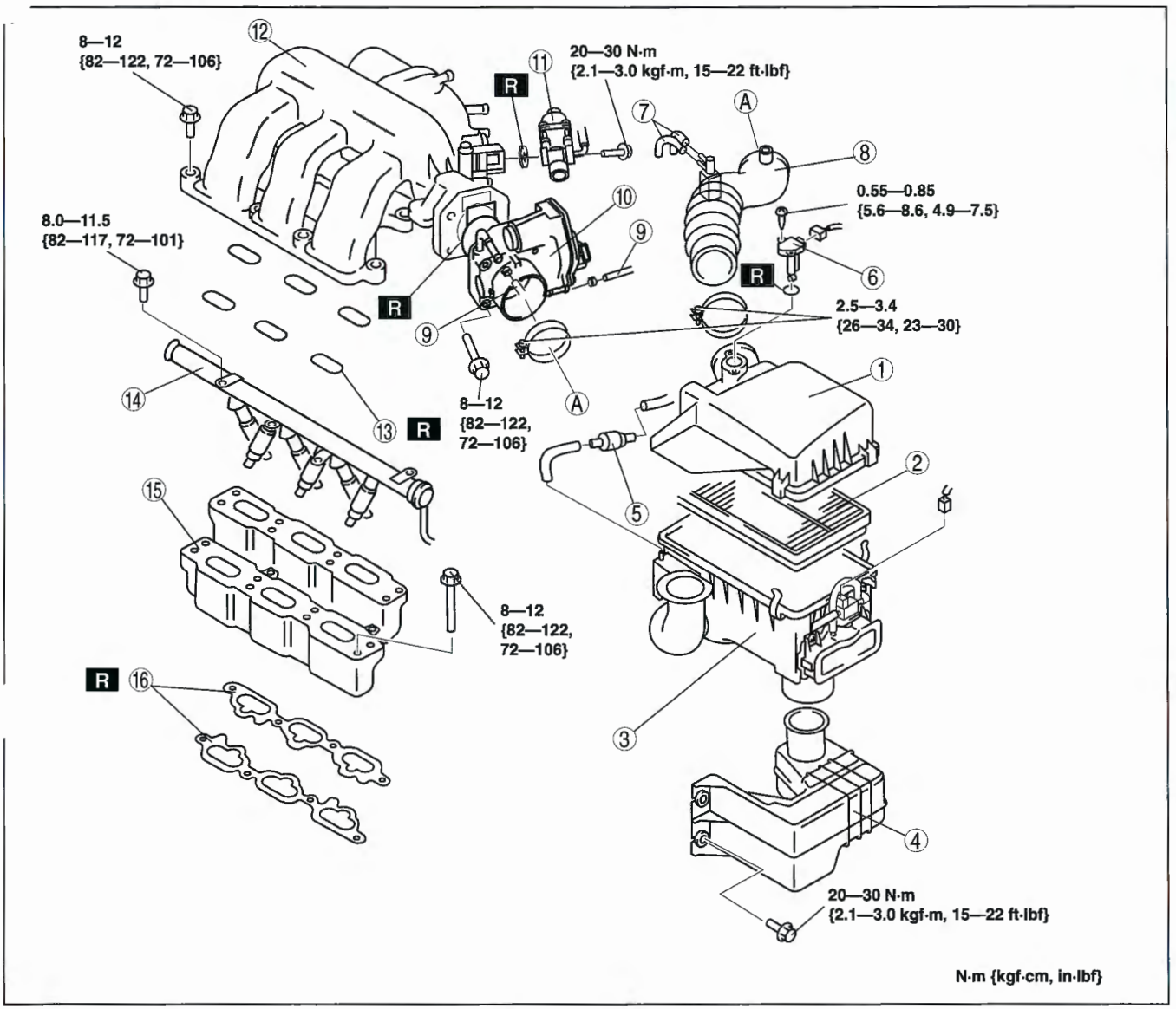

D6U113BW7002

1	Air cleaner cover
2	Air cleaner element
3	Air cleaner case
4	Resonance chamber (See 01–13C–4 Resonance Chamber Removal Note)
5	VAD check valve (one-way)
6	MAF/IAT sensor
7	Vacuum hose (purge solenoid valve)
8	Air hose
9	Water hose (See 01–13C–4 Water Hose Removal Note)
10	Throttle body

11	EGR valve (See 01–16A–17 EGR VALVE REMOVAL/ INSTALLATION [AJ])
12	Dynamic chamber (See 01–13C–4 Dynamic Chamber Installation Note)
13	Dynamic chamber gasket
14	Fuel distributor (See 01–14A–27 FUEL INJECTOR REMOVAL/ INSTALLATION [AJ])
15	Intake manifold (See 01–13C–4 Intake Manifold Installation Note)
16	Intake manifold gasket

Resonance Chamber Removal Note

1. Remove the front mudguard (LH) before removing the resonance chamber.

Water Hose Removal Note

1. Drain the engine coolant before removing the water hose. (See 01–12A–5 ENGINE COOLANT REPLACEMENT [L3, AJ].)

Intake Manifold Installation Note

1. Tighten the intake manifold installation bolts in the order indicated.

   Tightening torque
   8—12 N·m {82—122 kgf·cm, 72—106 in·lbf}

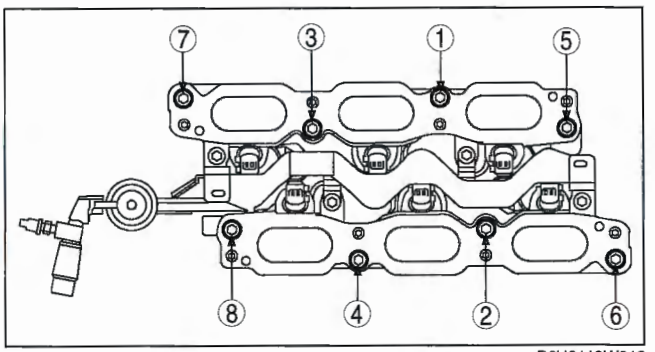

B6U0113W012

Dynamic Chamber Installation Note

1. Tighten the dynamic chamber installation bolts in the order indicated.

   Tightening torque
   8—12 N·m {82—122 kgf·cm, 72—106 in·lbf}

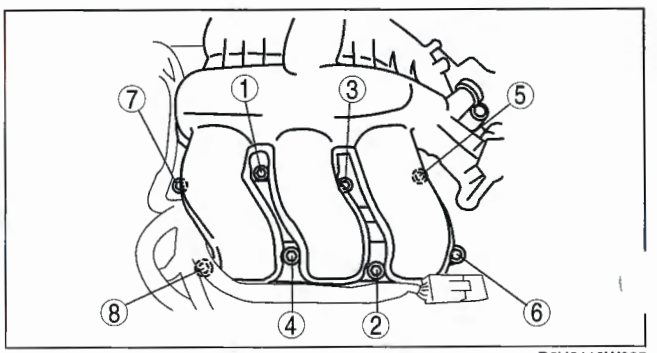

B6U0113W005

AIR CLEANER ELEMENT INSPECTION [AJ]

E6U011300000W05

1. Remove the air cleaner element. (See 01–13C–2 INTAKE AIR SYSTEM REMOVAL/INSTALLATION [AJ].)
2. Verify that the air cleaner element surface is free of dirt.
   - If there is dirt present, use an air gun or similar tool to clean the element.
   - If the replacement time limit has passed, replace the element.

VARIABLE AIR DUCT (VAD) SHUTTER VALVE INSPECTION [AJ]

E6U011300000W06

1. Remove the air cleaner case. (See 01–13C–2 INTAKE AIR SYSTEM REMOVAL/INSTALLATION [AJ].)
2. Disconnect the vacuum hose from the VAD shutter valve actuator.
3. Connect a vacuum pump to the VAD shutter valve actuator.
4. Apply vacuum and verify that the rod moves.
   - If the rod does not move, replace the air cleaner case.

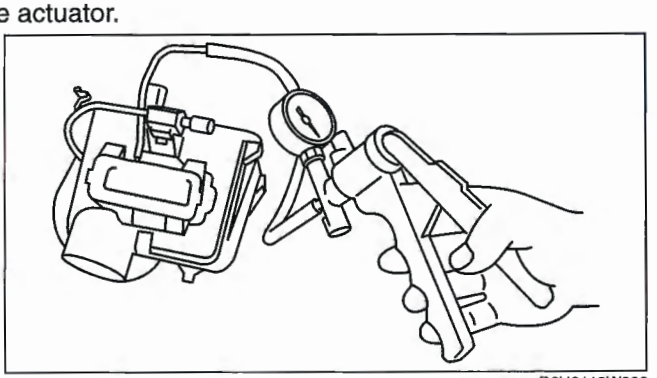
B6U0113W006

Vacuum kPa {mmHg, inHg}	Rod movement
Below –10 {–75, –3.0}	Starts to move
Above –35 {–263, –10.4}	Fully pulled

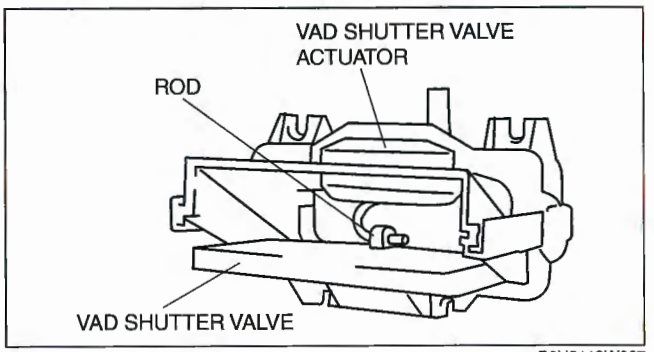

B6U0113W007

VARIABLE AIR DUCT (VAD) CONTROL SOLENOID VALVE INSPECTION [AJ]

E6U011300000W07

1. Remove the VAD control solenoid valve. (See 01–13C–2 INTAKE AIR SYSTEM REMOVAL/INSTALLATION [AJ].)
2. Inspect airflow between the ports under the following conditions.
   - If not as specified, replace the VAD control solenoid valve.
   - If as specified, carry out the "Circuit Open/Short Inspection".

○—○ : Continuity ○═○ : Airflow

Step	Terminal		Port		
	A	B	A	B	C
1	○—○		○═○		
2	B+	GND	○═══○		

B6U0113W008

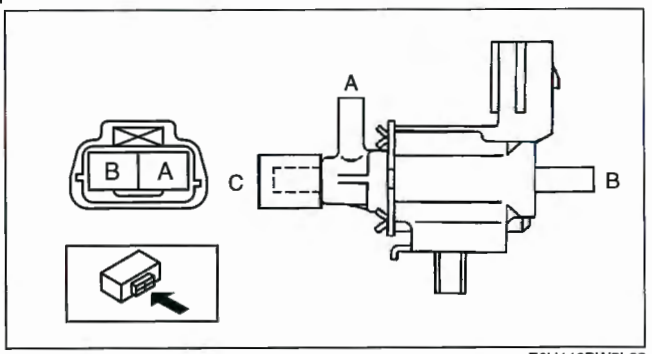

E6U113BW5L03

Circuit Open/Short Inspection

1. Disconnect the PCM connector. (See 01–40C–5 PCM REMOVAL/INSTALLATION [AJ].)
2. Inspect the following wiring harness for open or short circuit (continuity check).

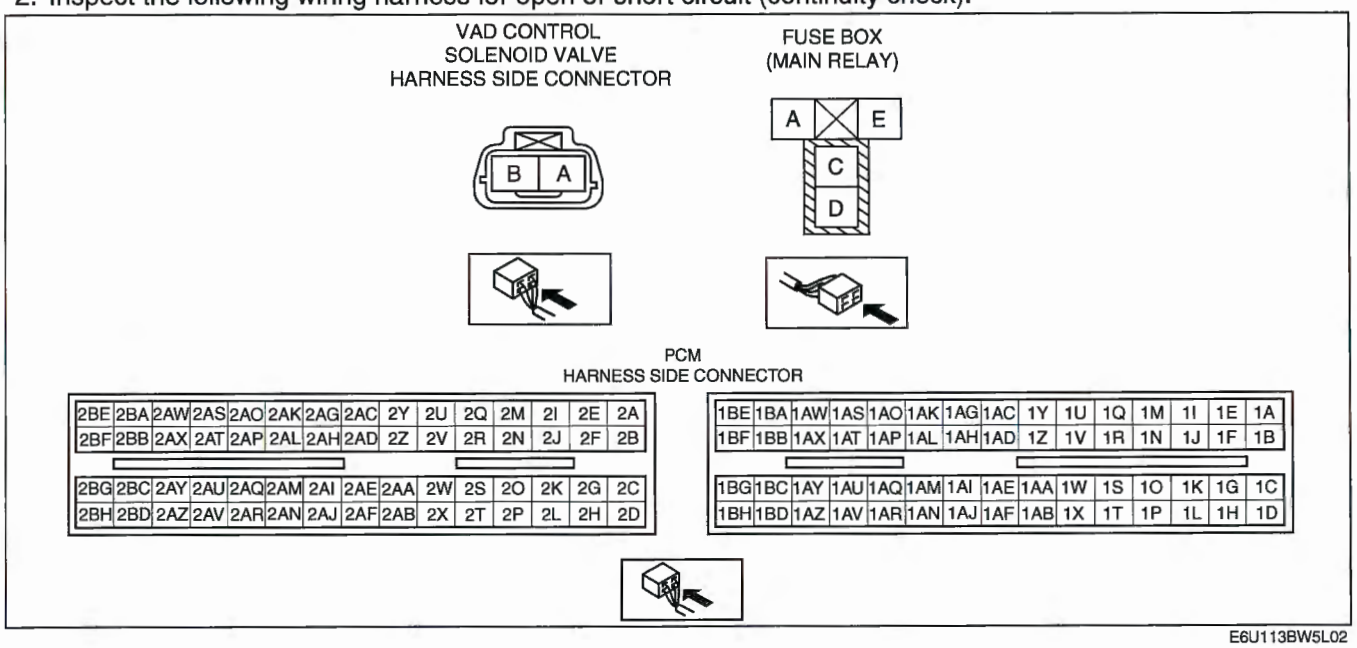

E6U113BW5L02

Open circuit

- If there is no continuity, there is an open circuit. Repair or replace the harness.
  - — VAD control solenoid valve terminal B and PCM terminal 1BB
  - — VAD control solenoid valve terminal A and main relay terminal C

Short circuit

- If there is continuity, there is a short circuit. Repair or replace the harness.
  - — VAD control solenoid valve terminal B and body body ground
  - — VAD control solenoid valve terminal A and power supply

VARIABLE AIR DUCT (VAD) CHECK VALVE (ONE-WAY) INSPECTION [AJ]

E6U011300000W08

1. Remove the VAD check valve (one-way). (See 01–13C–2 INTAKE AIR SYSTEM REMOVAL/INSTALLATION [AJ].)
2. Blow through A and verify that air flows from B.
3. Blow through B and verify that air does not flow from A.
   - If not as specified, replace the VAD check valve (one-way).

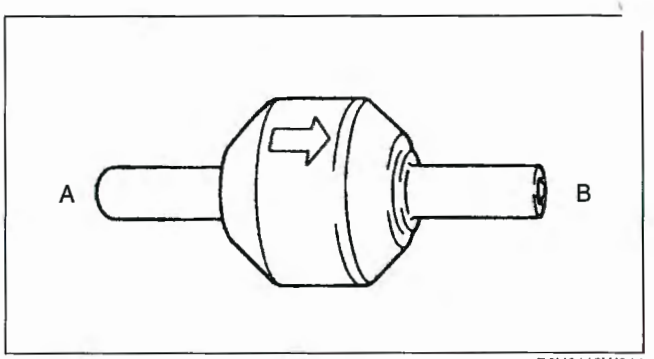

B6U0113W011

THROTTLE ACTUATOR INSPECTION [AJ]

E6U011313640W01

Caution

- **When the ignition switch is turned to the ON position, the PCM operates the throttle actuator to adjust the throttle valve position. At this time, do not touch the valve to open or close it because your fingers could be pinched.**

Note

- Perform the following inspection only when directed.

Visual Inspection

1. Verify that no DTCs related stored to the TP or APP sensors have been stored.
   - If any DTCs have been stored, perform the applicable DTC inspection. (See 01–02C–13 DTC TABLE [AJ].)
2. Remove the air hose from the throttle body. (See 01–13C–2 INTAKE AIR SYSTEM REMOVAL/INSTALLATION [AJ].)
3. Turn the ignition switch to the ON position.
4. Operate the accelerator pedal and verify that the throttle valve opens and closes in accordance with the pedal movement.
   - If it cannot be verified, perform the "Continuity Inspection".

Continuity Inspection

1. Disconnect the negative battery cable.
2. Disconnect the throttle actuator connector.
3. Inspect for continuity between the throttle actuator terminals A and B using an ohmmeter.
   - If not as specified, replace the throttle body. (See 01–13C–2 INTAKE AIR SYSTEM REMOVAL/INSTALLATION [AJ].)
   - If as specified, perform the "Circuit Open/Short Inspection".

Circuit Open/Short Inspection

1. Disconnect the PCM connector. (See 01–40C–5 PCM REMOVAL/INSTALLATION [AJ].)
2. Inspect the following wiring harnesses for open or short circuit (continuity check).

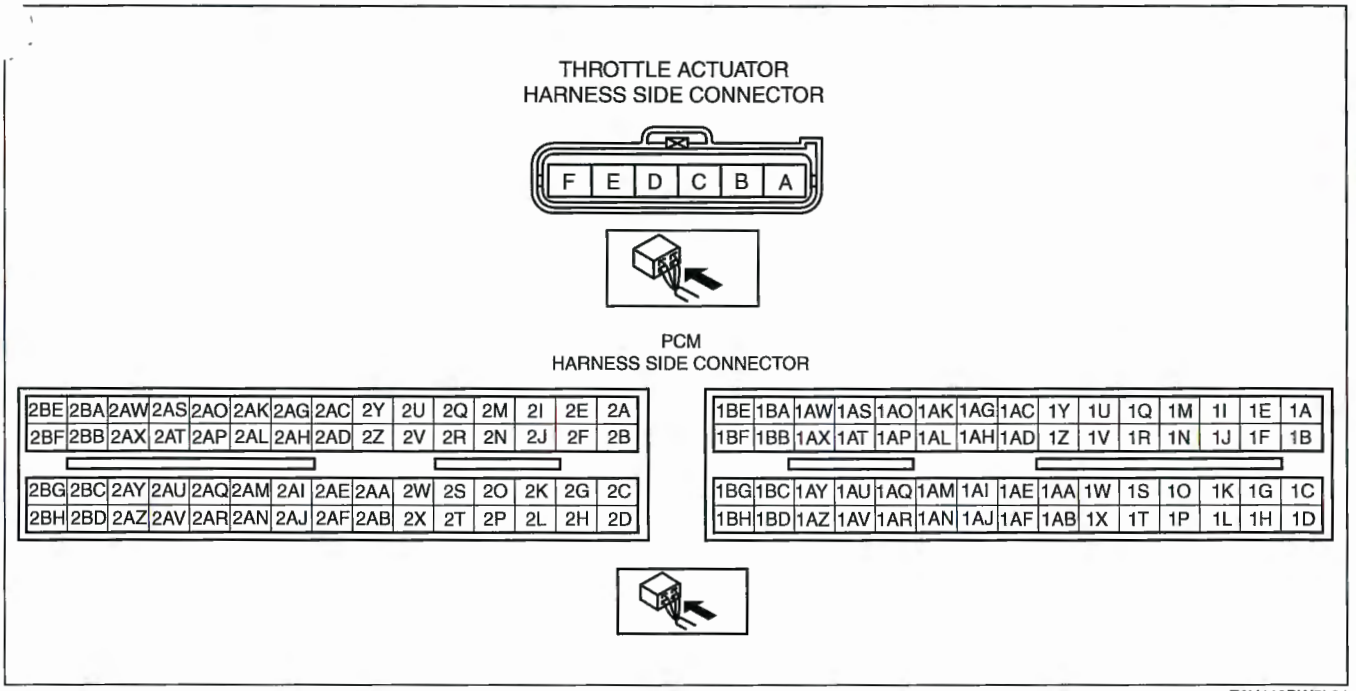

E6U113BW5L01

Open circuit

- If there is no continuity, there is an open circuit. Repair or replace the harness.
  - — Throttle actuator terminal B and PCM terminal 2A
  - — Throttle actuator terminal A and PCM terminal 2B

Short circuit

- If there is continuity, there is a short circuit. Repair or replace the harness.
  - — Throttle actuator terminal B and power supply
  - — Throttle actuator terminal B and body ground
  - — Throttle actuator terminal A and power supply
  - — Throttle actuator terminal A and body ground

ACCELERATOR PEDAL REMOVAL/INSTALLATION [AJ]

1. Remove in the order indicated in the table.

1	Connector
2	Accelerator pedal

2. Install in the reverse order of removal.

E6U011341600W01

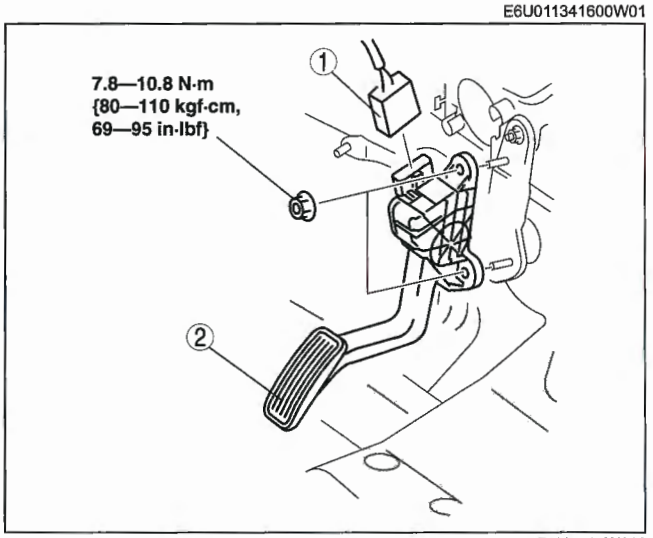

B6U0113W013

01–14A FUEL SYSTEM [L3, AJ]

FUEL SYSTEM LOCATION INDEX
[L3, AJ] 01–14A–2
Engine Room Side 01–14A–2
Fuel Tank Side 01–14A–4
FUEL SYSTEM DIAGRAM
[L3, AJ] 01–14A–5
BEFORE REPAIR PROCEDURE
[L3, AJ] 01–14A–6
Fuel Line Safety Procedure 01–14A–6
AFTER REPAIR PROCEDURE
[L3, AJ] 01–14A–6
Fuel Leakage Inspection 01–14A–6
FUEL LINE PRESSURE INSPECTION
[L3, AJ] 01–14A–7
FUEL TANK REMOVAL/INSTALLATION
[L3, AJ] 01–14A–10
Joint Hose Installation Note 01–14A–11
FUEL SHUT-OFF/ROLLOVER VALVE
INSPECTION [L3, AJ] 01–14A–12
NONRETURN VALVE INSPECTION
[L3, AJ] 01–14A–13
FUEL PUMP UNIT
REMOVAL/INSTALLATION
[L3, AJ] 01–14A–13
Fuel Pump Cap-installed Type 01–14A–13
Plastic Fuel Hose Removal Note 01–14A–16
Fuel Pump Cap Removal Note 01–14A–16
Fuel Pump Cap Installation Note 01–14A–17
Plastic Fuel Hose Installation Note ... 01–14A–20
FUEL PUMP UNIT
DISASSEMBLY/ASSEMBLY
[L3, AJ] 01–14A–20
FUEL PUMP UNIT INSPECTION
[L3, AJ] 01–14A–21
Continuity Inspection 01–14A–21
Circuit Open/Short Inspection 01–14A–21
Fuel Pump Hold
Pressure Inspection 01–14A–21
FUEL INJECTOR
REMOVAL/INSTALLATION [L3] 01–14A–24
Plastic Fuel Hose Removal Note 01–14A–24
Fuel Injector Removal Note 01–14A–25
Plastic Fuel Hose
Installation Note 01–14A–26
Fuel Injector Installation Note 01–14A–27
FUEL INJECTOR
REMOVAL/INSTALLATION [AJ] 01–14A–27
Plastic Fuel Hose Removal Note 01–14A–28
Plastic Fuel Hose Installation Note 01–14A–29
Fuel Injector Installation Note 01–14A–29
FUEL INJECTOR INSPECTION
[L3] 01–14A–29
Operation Test 01–14A–29
Resistance Inspection 01–14A–30
Circuit Open/Short Inspection 01–14A–30
Fuel Leakage Inspection 01–14A–31
Volume Inspection 01–14A–32
Atomization 01–14A–32
FUEL INJECTOR INSPECTION
[AJ] 01–14A–32
Operation Test 01–14A–32
Resistance Inspection 01–14A–32
Circuit Open/Short Inspection 01–14A–33
Fuel Leakage Test 01–14A–33
Volume Test 01–14A–35
Atomization 01–14A–35
PRESSURE REGULATOR INSPECTION
[L3, AJ] 01–14A–35

FUEL SYSTEM LOCATION INDEX [L3, AJ]

E6U011400000W01

Engine Room Side
L3 engine models

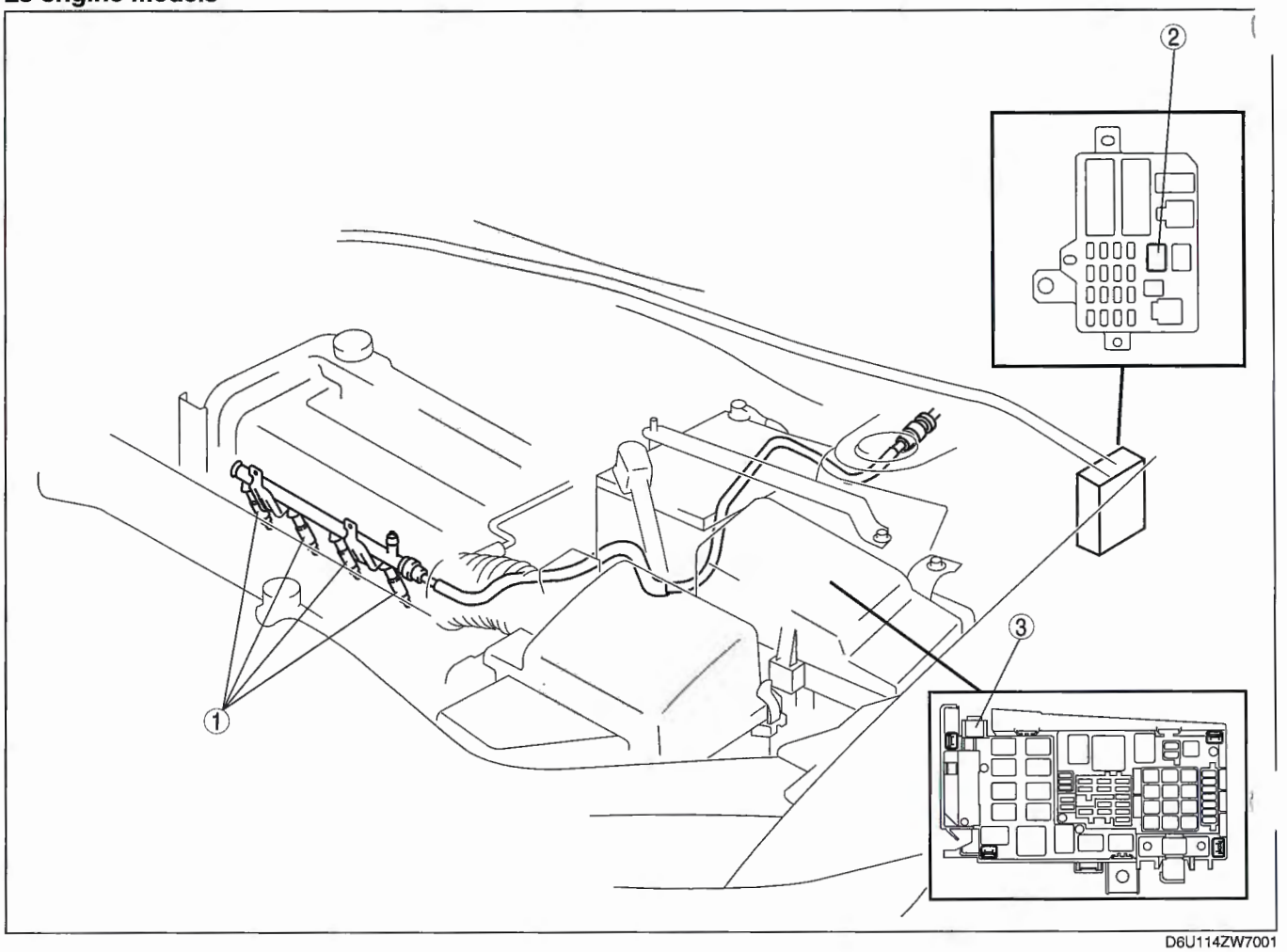

D6U114ZW7001

1	Fuel injector (See 01–14A–24 FUEL INJECTOR REMOVAL/ INSTALLATION [L3]) (See 01–14A–29 FUEL INJECTOR INSPECTION [L3])

2	Fuel pump relay (See 09–21–7 RELAY INSPECTION)
3	Check connector

AJ engine models

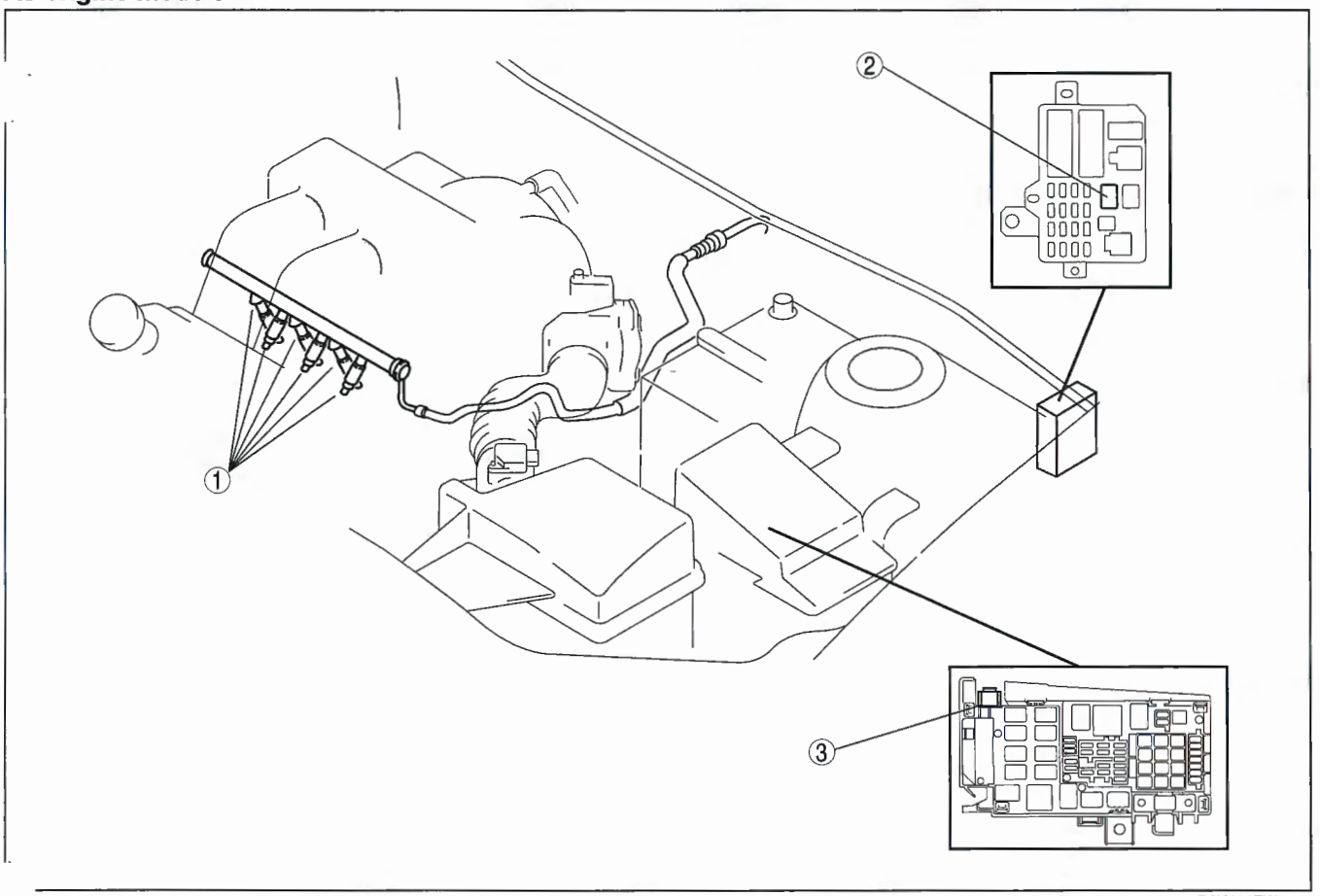

D6U114ZW7002

1	Fuel injector (See 01–14A–27 FUEL INJECTOR REMOVAL/ INSTALLATION [AJ]) (See 01–14A–32 FUEL INJECTOR INSPECTION [AJ])

2	Fuel pump relay (See 09–21–7 RELAY INSPECTION)
3	Check connector

Fuel Tank Side
TYPE A

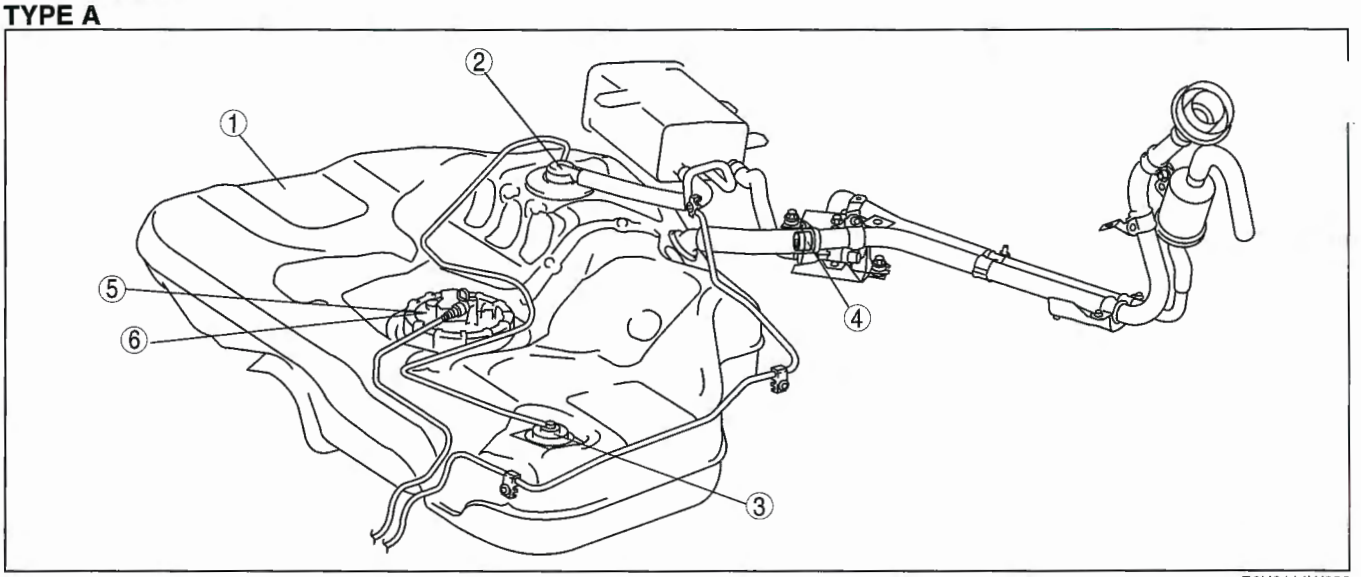

B6U0114W038

TYPE B

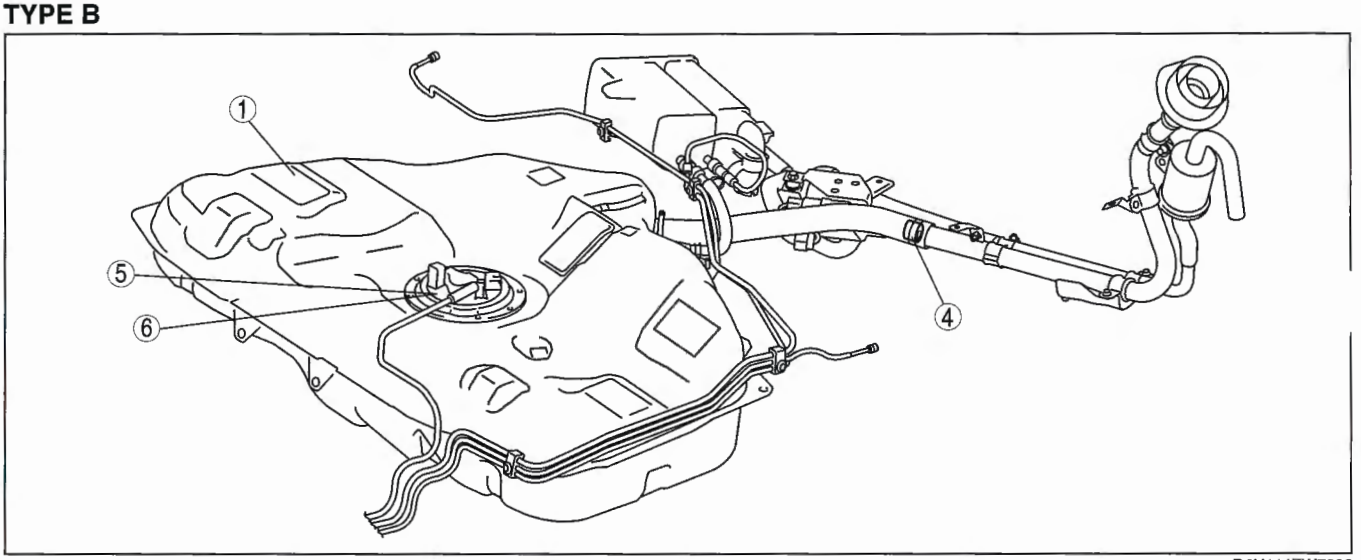

D6U114ZW7006

1	Fuel tank (See 01–14A–10 FUEL TANK REMOVAL/ INSTALLATION [L3, AJ])
2	Fuel shut-off valve (See 01–14A–12 FUEL SHUT-OFF/ROLLOVER VALVE INSPECTION [L3, AJ])
3	Rollover valve (See 01–14A–12 FUEL SHUT-OFF/ROLLOVER VALVE INSPECTION [L3, AJ])
4	Nonreturn valve (See 01–14A–13 NONRETURN VALVE INSPECTION [L3, AJ])

5	Fuel pump unit (See 01–14A–13 FUEL PUMP UNIT REMOVAL/ INSTALLATION [L3, AJ]) (See 01–14A–20 FUEL PUMP UNIT DISASSEMBLY/ASSEMBLY [L3, AJ]) (See 01–14A–21 FUEL PUMP UNIT INSPECTION [L3, AJ])
6	Pressure regulator (See 01–14A–35 PRESSURE REGULATOR INSPECTION [L3, AJ])

TYPE A:The rollover valve is located on the external wall of the fuel tank.
TYPE B:The rollover valve is located inside the fuel tank.

FUEL SYSTEM DIAGRAM [L3, AJ]

E6U011400000W02

L3 engine models

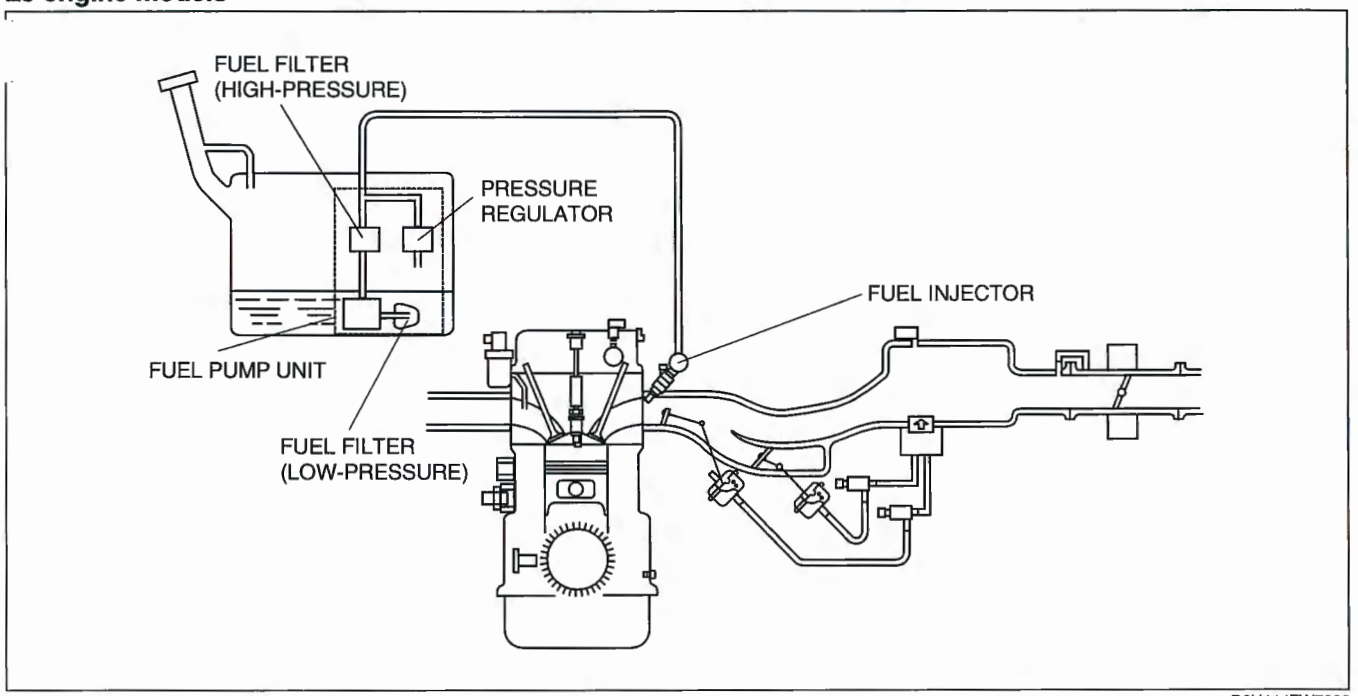

D6U114ZW7003

AJ engine models

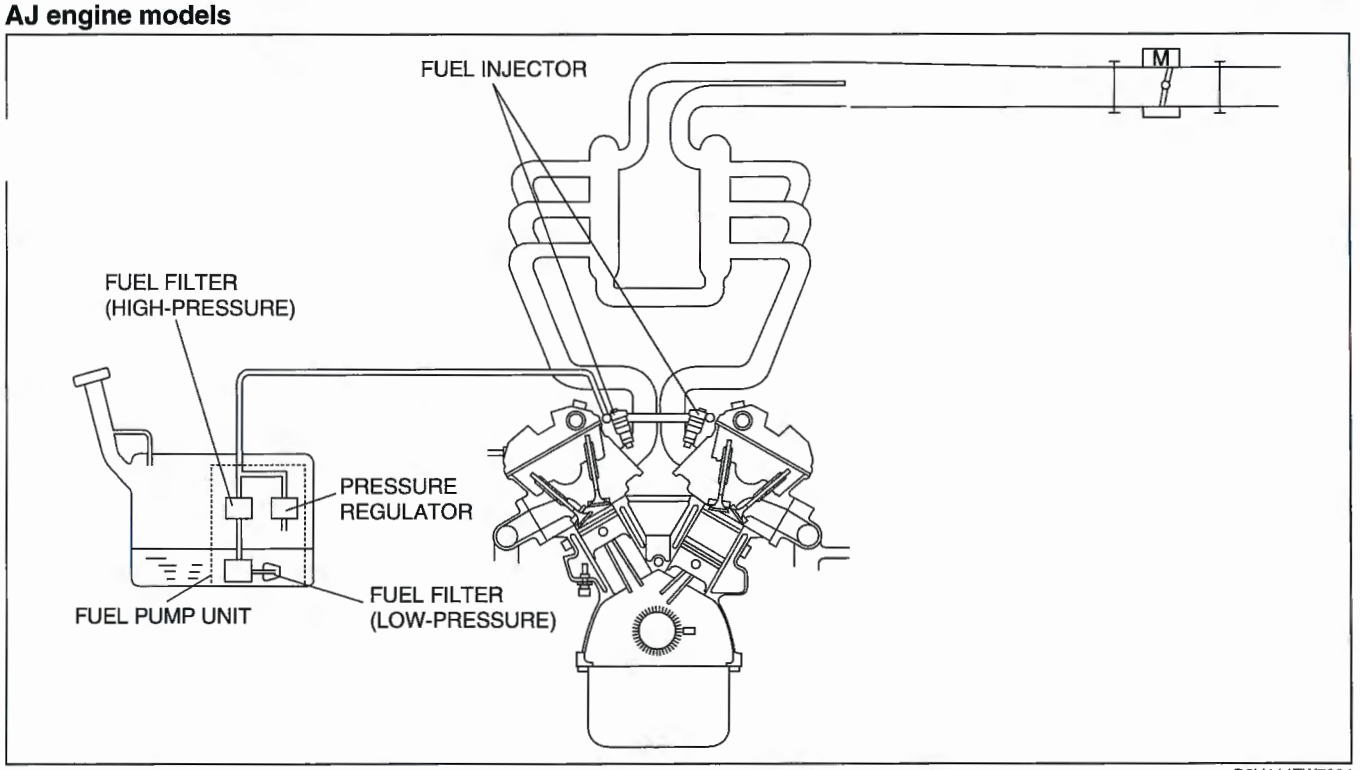

D6U114ZW7004

BEFORE REPAIR PROCEDURE [L3, AJ]

E6U011400000W03

Warning

- **Fuel vapor is hazardous. It can easily ignite, causing serious injury and damage. Always keep sparks and flames away from fuel.**
- **Fuel line spills and leakage are dangerous. Fuel can ignite and cause serious injuries or death and damage. Fuel can also irritate skin and eyes. To prevent this, always complete the following "Fuel Line Safety Procedure".**
- **A person charged with static electricity could cause a fire or explosion, resulting in death or serious injury. Before performing work on the fuel system, discharge static electricity by touching the vehicle body.**

Fuel Line Safety Procedure

Note

- Fuel in the fuel system is under high pressure even when the engine is not running.

1. Remove the fuel-filler cap and release the pressure in the fuel tank.
2. Remove the fuel pump relay.
3. Start the engine.
4. After the engine stalls, crank the engine several times.
5. Turn the ignition switch to the LOCK position.
6. Install the fuel pump relay.

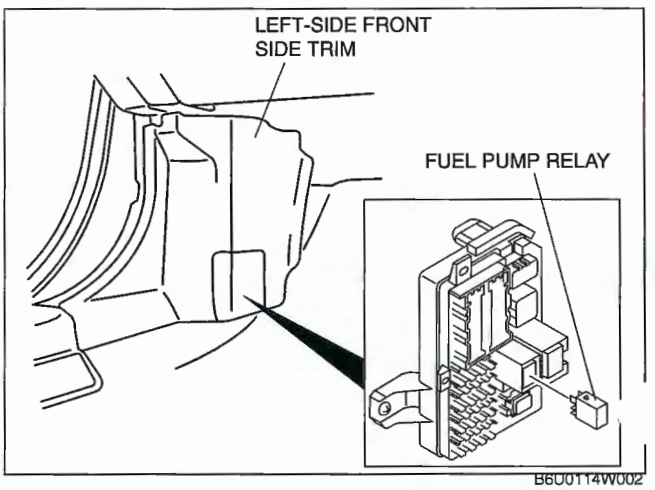

B6U0114W002

AFTER REPAIR PROCEDURE [L3, AJ]

E6U011400000W04

Warning

- **Fuel line spills and leakage are dangerous. Fuel can ignite and cause serious injuries or death and damage. When installing the fuel hose, perform "Fuel Leakage Inspection" described below.**

Fuel Leakage Inspection

Warning

- **Fuel line spills and leakage are dangerous. Fuel can ignite and cause serious injuries or death and damage. Always carry out the following procedure with the engine stopped.**

Caution

- **Connecting to the wrong check connector terminal may cause a malfunction. Carefully connect only to the specified terminal.**

1. Short the check connector terminal F/P to body GND using a jumper wire.
2. Turn the ignition switch to the ON position to operate the fuel pump.
3. Pressurize the system in this manner for **at least 5 min** to be sure there is no leakage.
   - If there is fuel leakage, inspect the fuel hoses, hose clamps, and fuel pipe sealing surface, and replace if necessary.
4. After repair, assemble the system and repeat Steps 1 to 3.

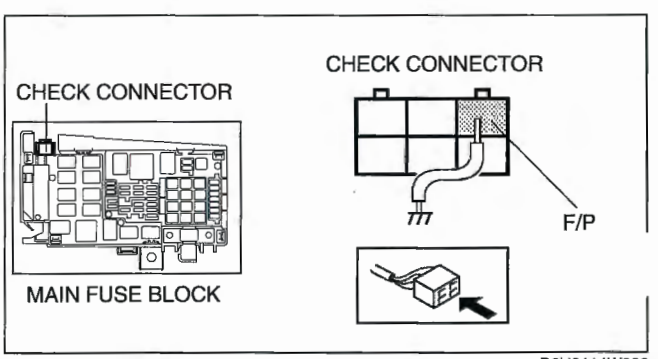

B6U0114W003

FUEL LINE PRESSURE INSPECTION [L3, AJ]

E6U011400000W05

Warning

- **Fuel line spills and leakage are dangerous. Fuel can ignite and cause serious injuries or death. Fuel can also irritate skin and eyes. To prevent this, always complete the "BEFORE REPAIR PROCEDURE". (See 01–14A–6 BEFORE REPAIR PROCEDURE [L3, AJ].)**

Caution

- **Disconnecting/connecting the quick release connector without cleaning it may possibly cause damage to the fuel pipe and quick release connector. Always clean the quick release connector joint area before disconnecting/connecting using cloth or soft brush, and make sure that it is free of foreign material.**

1. Complete the "BEFORE REPAIR PROCEDURE".
   (See 01–14A–6 BEFORE REPAIR PROCEDURE [L3, AJ])
2. Disconnect the vacuum hose from the intake manifold that connecting to the brake booster.
3. Disconnect the negative battery cable.

Caution

- **The quick release connector may be damaged if the tab is turned too far. Do not turn the tab over the stopper.**

4. Disconnect the quick release connector from the fuel tank as follows:
   (1) Push the tab on the locking coupler **90 degrees** until it stops.
   (2) Pull the fuel hose straight back.

Note

- The stopper may be removed from the quick connector. Take care not to loose it. Reinstall it to the quick release connector before reconnecting the fuel line.

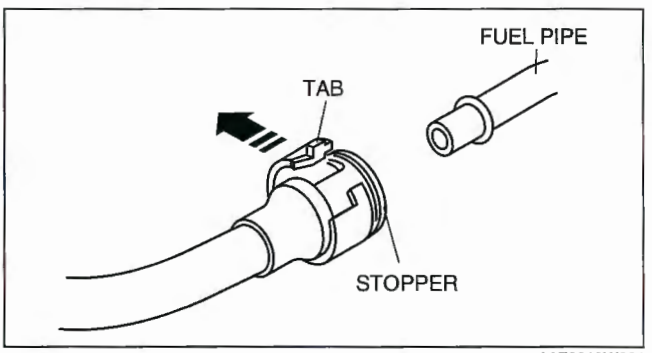

A6E3912W001

- The locking coupler has two internal locking tabs which distributor pipe. Be sure that the tab on the locking coupler is rotated until it stops to release two internal locking tabs.

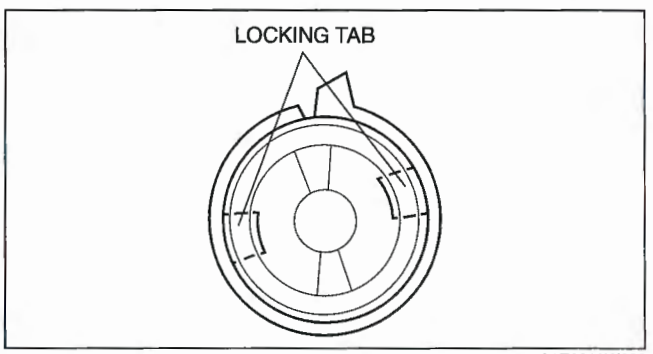

A6E3912W002

5. Push the **SST** quick release connector into the fuel pipe and plastic fuel hose into the **SST** until a click is heard.
6. Turn the lever parallel to the hose of the **SST** as shown.

L3 engine models

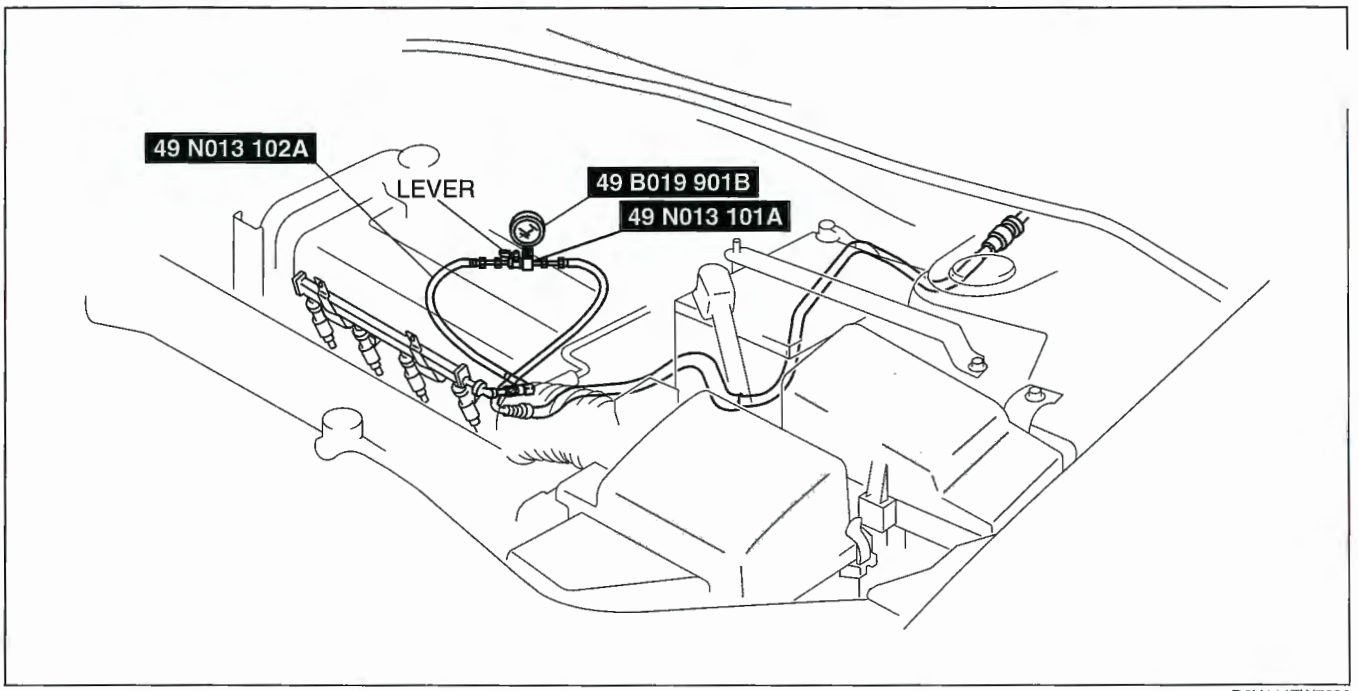

D6U114ZW7200

AJ engine models

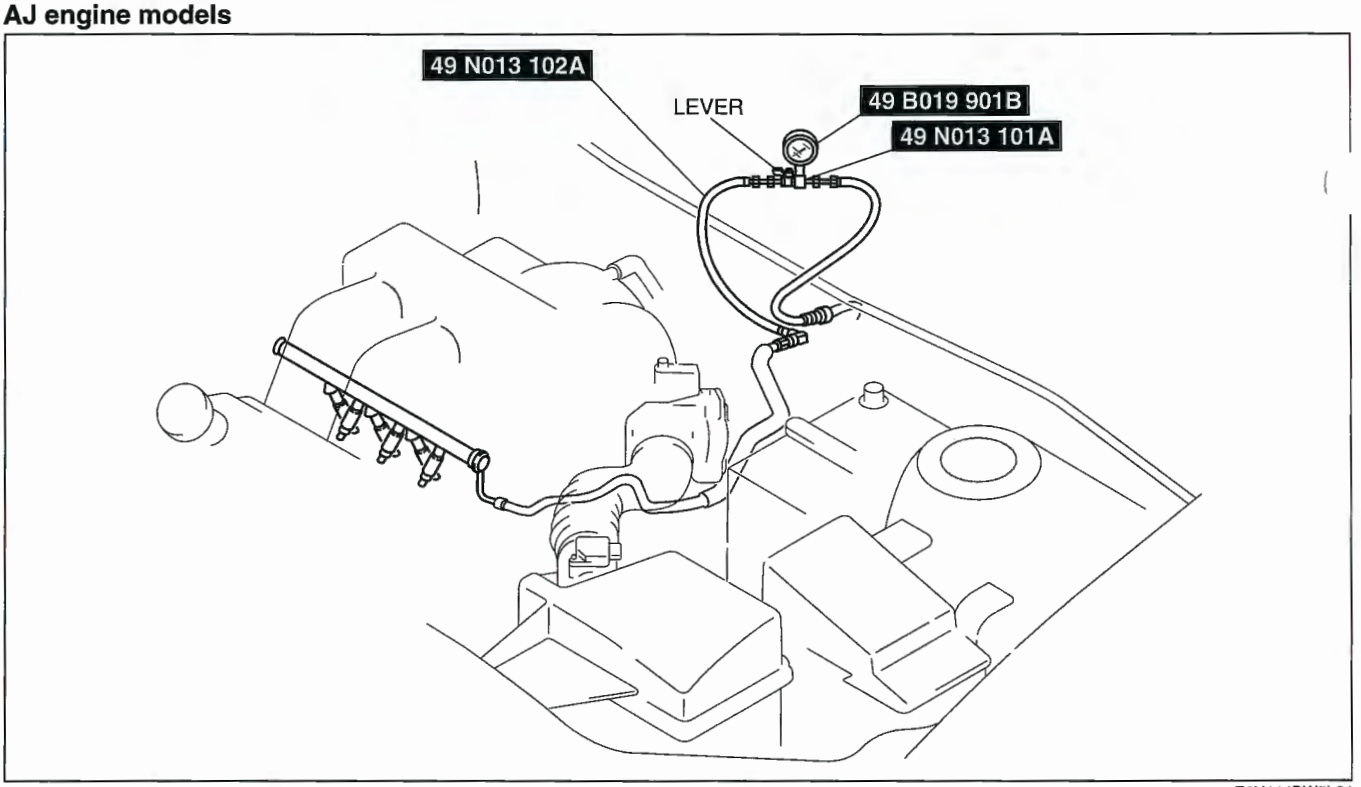

E6U114BW5L21

7. Connect the vacuum hose from the intake manifold that connecting to the brake booster.
8. Connect the negative battery cable.
9. Verify that the vehicles for AT is at N position and MT is at neutral position.

10. Start the engine and let it idle. Measure the fuel line pressure.
    - If not as specified, inspect the following:

      Zero or low
      — FP circuit
      — FP
      — Fuel line (clogged)
      — Fuel leakage inside pressure regulator

      High
      — Pressure regulator for high pressure cause

Fuel line pressure
L3: 375—450 kPa {3.9—4.5 kgf/cm^2, 55—65 psi}
AJ: 430—510 kPa {4.4—5.2 kgf/cm^2, 63—73 psi}

11. Observe the fuel pressure gauge indicator during heavy acceleration.
12. Verify that the fuel pressure fluctuation is within the specification during the test.
    - If not as specified, inspect the following:
      — PCM
      — FP
      — Fuel line for improper routing, kinks or leakage

Fuel pressure fluctuation
L3: 365—450 kPa {3.8—4.5 kgf/cm^2, 53—65 psi}
AJ: 420—510 kPa {4.3—5.2 kgf/cm^2, 61—73 psi}

13. Turn the ignition switch to the LOCK position.
14. Measure the fuel hold pressure **after 5 min**.
    - If not as specified, inspect the following:
      — FP hold pressure
      — Fuel injector for leakage
      — Fuel line for improper routing, kinks or leakage

Fuel hold pressure
L3: More than 200 kPa {2.0 kgf/cm^2, 29 psi}
AJ: More than 250 kPa {2.5 kgf/cm^2, 36 psi}

15. Complete the "BEFORE REPAIR PROCEDURE".
    (See 01–14A–6 BEFORE REPAIR PROCEDURE [L3, AJ])
16. Disconnect the vacuum hose from the intake manifold that connecting to the brake booster.
17. Disconnect the **SST**.

Note
- A checker tab is integrated with quick release connector for new plastic fuel hoses. The checker tab will be released from the quick release connector after it is completely engaged with the fuel pipe.

18. Inspect the plastic fuel hose and fuel pipe sealing surface for damage and deformation, and replace as necessary.
    - If the quick release connector O-ring is damaged or has slipped, replace the plastic fuel hose.
19. Apply a small amount of clean engine oil to the sealing surface of the fuel pipe.
20. Reconnect the fuel main hose to the fuel distributor until a click is heard.
21. Lightly pull and push the quick release connector a few times by hand and verify that it can move **2.0—3.0 mm {0.08—0.11 in}** and it is connected securely.
    - If quick release connector does not move at all, verify that O-ring is not damaged and slipped, and reconnect the quick release connector.

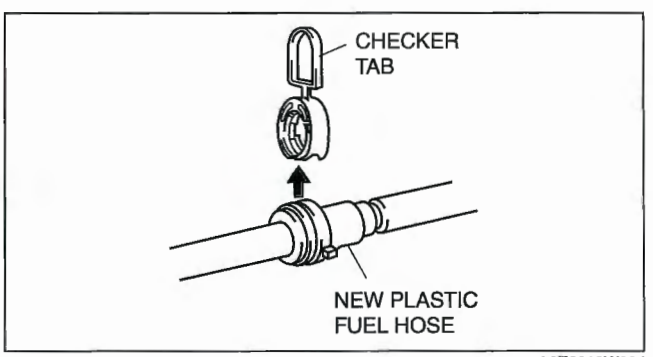

A6E3912W004

22. Connect the vacuum hose from the intake manifold that connecting to the brake booster.
23. Complete the "AFTER REPAIR PROCEDURE". (See 01–14A–6 AFTER REPAIR PROCEDURE [L3, AJ].)

FUEL TANK REMOVAL/INSTALLATION [L3, AJ]

E6U011442110W01

Warning

- **Repairing a fuel tank that has not been properly steam-cleaned can be dangerous. Explosion or fire may cause death or serious injury. Always properly steam clean a fuel tank before repairing it.**
- **Fuel line spills and leakage are dangerous. Fuel can ignite and cause serious injuries or death and damage. Fuel can also irritate skin and eyes. To prevent this, do not damage the sealing surface of the fuel pump unit when removing or installing.**
- **A person charged with static electricity could cause a fire or explosion, resulting in death or serious injury. Before draining fuel, make sure to discharge static electricity by touching the vehicle body.**

Caution

- **Disconnecting/connecting the quick release connector without cleaning it may cause damage to the fuel pipe and quick release connector. Always clean the quick release connector joint area before disconnecting/connecting using a cloth or soft brush, and make sure that it is free of foreign material.**

1. Level the vehicle.
2. Complete the "BEFORE REPAIR PROCEDURE". (See 01–14A–6 BEFORE REPAIR PROCEDURE [L3, AJ].)
3. Disconnect the negative battery cable.
4. Remove the fuel pump unit. (See01–14A–13 FUEL PUMP UNIT REMOVAL/INSTALLATION [L3, AJ].)
5. Siphon the fuel from the fuel tank.
6. Remove in the order indicated in the table.
7. Install in the reverse order of removal.
8. Complete the "AFTER REPAIR PROCEDURE". (See 01–14A–6 AFTER REPAIR PROCEDURE [L3, AJ].)

TYPE A

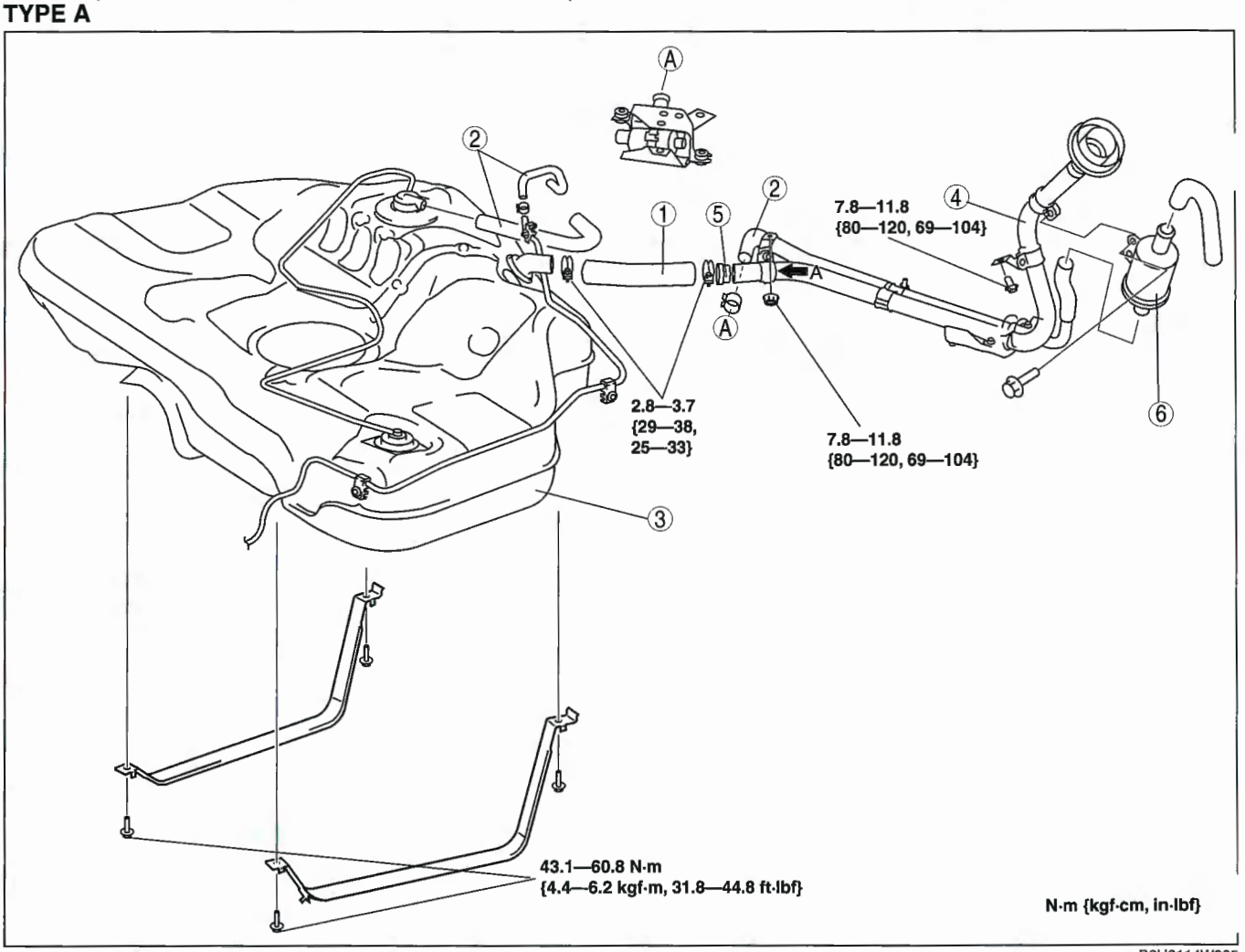

B6U0114W005

TYPE B

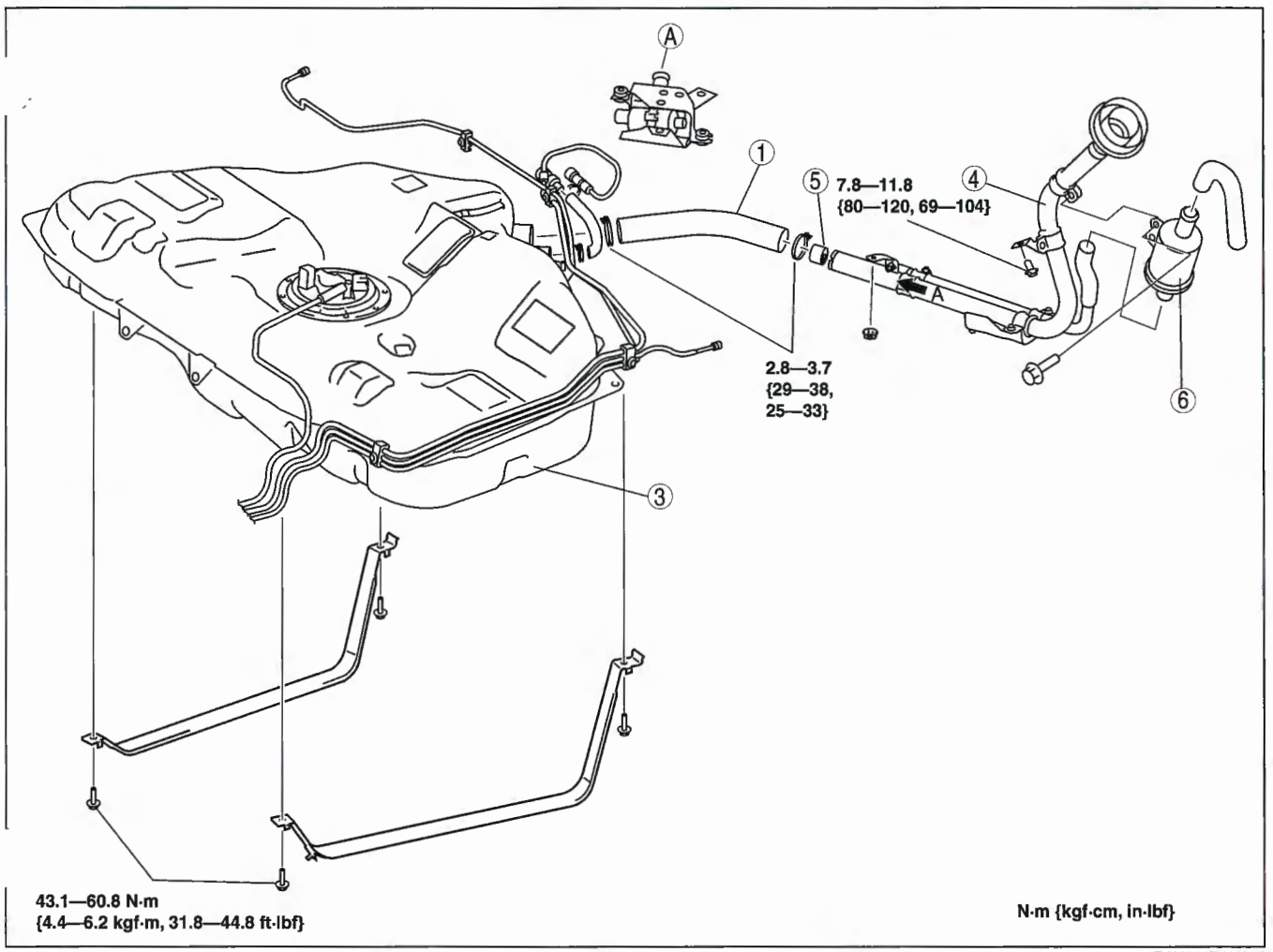

D6U114ZW7007

1	Joint hose (See 01–14A–11 Joint Hose Installation Note)
2	Evaporative hose (See 01–16A–7 Evaporative Hose Removal Note (Type A)) (See 01–16A–9 Evaporative Hose Installation Note)
3	Fuel tank

4	Fuel-filler pipe
5	Nonreturn valve
6	Air filter

TYPE A:The rollover valve is located on the external wall of the fuel tank.
TYPE B:The rollover valve is located inside the fuel tank.

Joint Hose Installation Note

1. Fit the joint hose onto the respective fittings, and install clamps as shown.

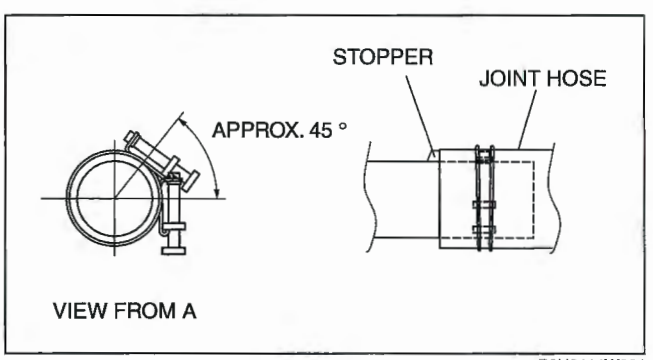

B6U0114W021

FUEL SHUT-OFF/ROLLOVER VALVE INSPECTION [L3, AJ]

E6U011442990W01

Caution

- **Disconnecting/connecting the quick release connector without cleaning it may cause damage to the fuel pipe and quick release connector. Always clean the quick release connector joint area before disconnecting/connecting using a cloth or soft brush, and make sure that it is free of foreign material.**

Note

- This inspection is for fuel shut-off valve and two rollover valves integrated in the fuel tank.

1. Disconnect the plastic fuel hose and the fuel pump unit connector. (See 01–14A–13 FUEL PUMP UNIT REMOVAL/INSTALLATION [L3, AJ].)
2. Remove the fuel tank with the fuel pump unit. (See 01–14A–10 FUEL TANK REMOVAL/INSTALLATION [L3, AJ].)
3. Plug the fuel pipe of the fuel pump unit.

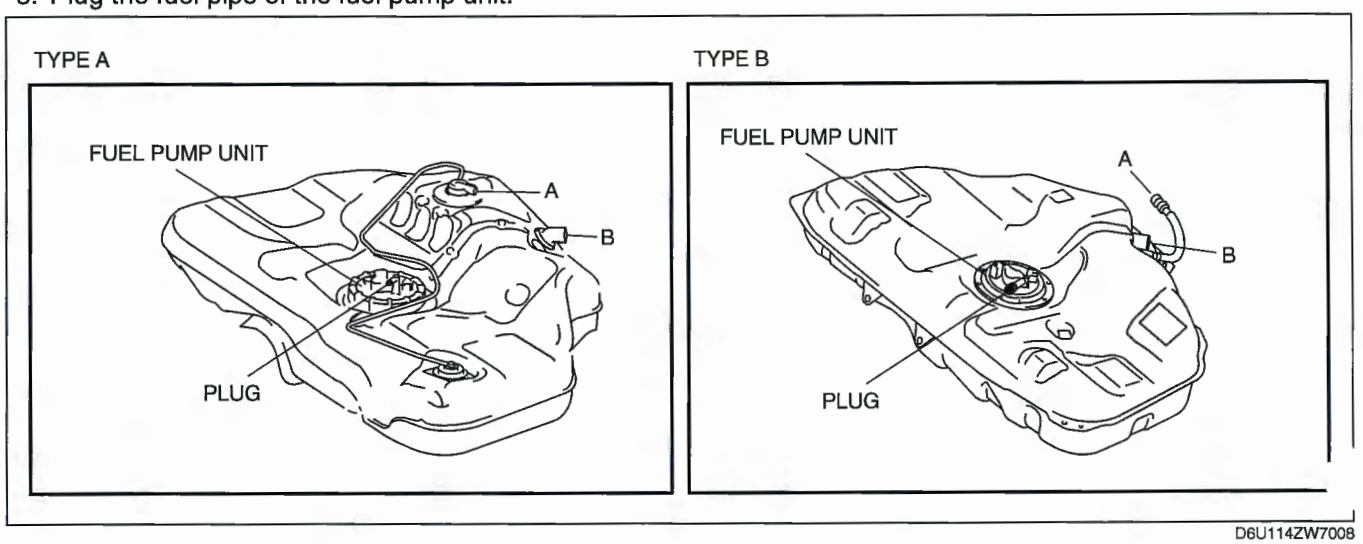

D6U114ZW7008

4. Level the fuel tank.
5. Blow through port B and verify that there is airflow from port A.
   - If there is no airflow, replace the fuel tank.
   - If there is airflow, turn the fuel tank upside down, and proceed to Step 6.

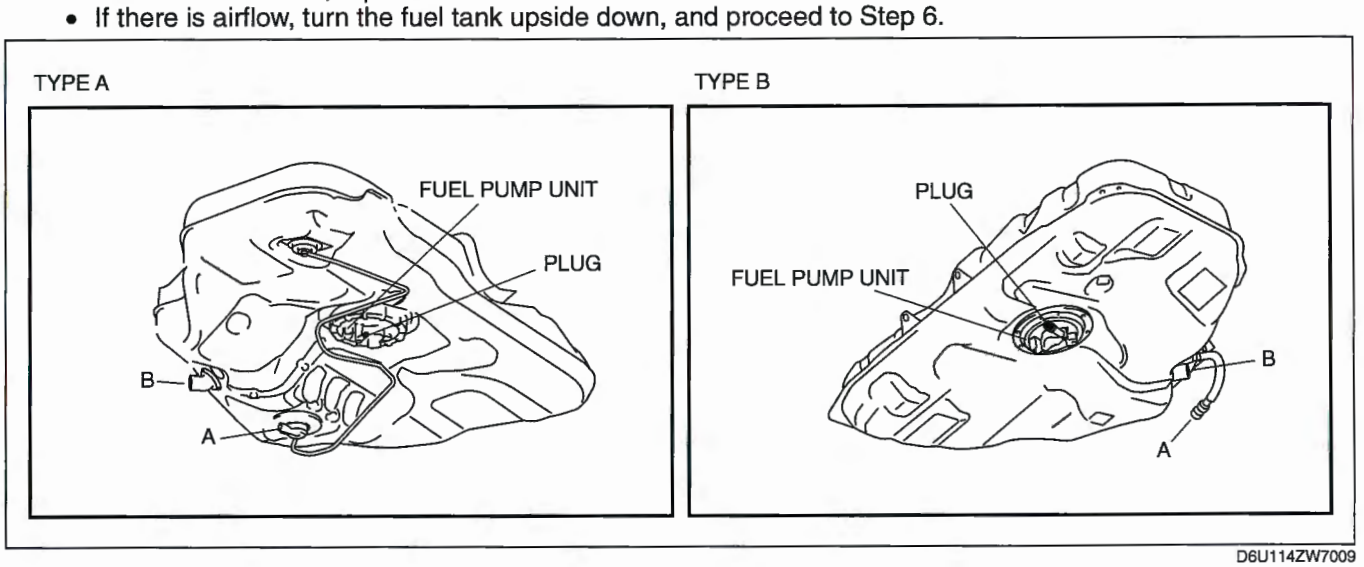

D6U114ZW7009

6. Blow through port B and verify that there is no airflow from port A.
   - If there is airflow, replace the fuel tank.

TYPE A:The rollover valve is located on the external wall of the fuel tank.
TYPE B:The rollover valve is located inside the fuel tank.

NONRETURN VALVE INSPECTION [L3, AJ]

E6U011442270W01

1. Remove the nonreturn valve. (See 01–14A–10 FUEL TANK REMOVAL/INSTALLATION [L3, AJ].)
2. Verify that the nonreturn valve opens up to **90°** when it is pushed from the fuel-filler pipe side, and it returns to the normal position by the spring force.
   - If the nonreturn valve does not open up to **90°** or does not return to the normal position, replace the nonreturn valve.

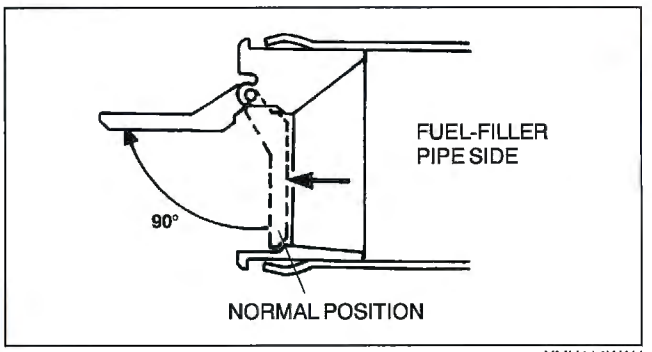

YMU114WAH

FUEL PUMP UNIT REMOVAL/INSTALLATION [L3, AJ]

E6U011413350W01

Warning

- **Fuel line spills and leakage are dangerous. Fuel can ignite and cause serious injuries or death and damage. Fuel can also irritate skin and eyes. To prevent this, always complete the "Fuel Line Safety Procedure".**
- **Fuel line spills and leakage are dangerous. Fuel can ignite and cause serious injuries or death and damage. Fuel can also irritate skin and eyes. To prevent this, before performing the fuel pump unit removal/installation, always complete the "Fuel Leak Inspection After Fuel Pump Unit Installation".**
- **A person charged with static electricity could cause a fire or explosion, resulting in death or serious injury. Before draining fuel, make sure to discharge static electricity by touching the vehicle body.**

Caution

- **Because the fuel tank is constructed such that the fuel level is higher than the installation surface of the fuel pump, fuel leakage could occur. If the fuel gauge indicates a fuel level of half or more, perform the following Steps 1-6 to drain the fuel.**
- **Disconnecting/connecting the quick release connector without cleaning it may possibly cause damage to the fuel pipe and quick release connector. Always clean the quick release connector joint area before disconnecting/connecting using a cloth or soft brush, and make sure that it is free of foreign material.**

Fuel Pump Cap-installed Type

1. Complete the "BEFORE REPAIR PROCEDURE". (See 01–14A–6 BEFORE REPAIR PROCEDURE [L3, AJ].)
2. Remove the plug hole plate.
3. Disconnect the quick release connector connected to the fuel distributor.
4. Connect a long hose to the disconnected quick release connector and drain the fuel into a container used for collecting gasoline.
5. Start the fuel pump using the following procedure.

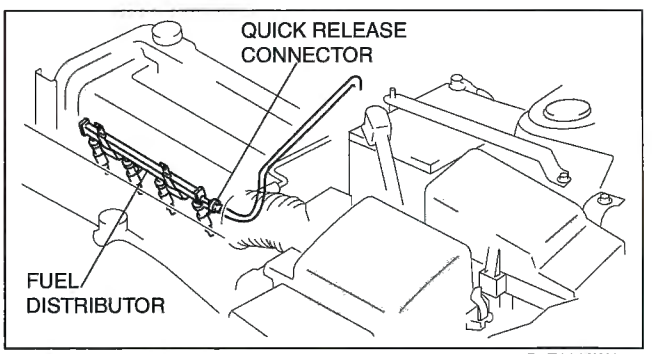

D6E114AW4701

Using WDS or equivalent

1. Connect the WDS or equivalent to the DLC-2.
2. Using the simulation function "FP", start the fuel pump.

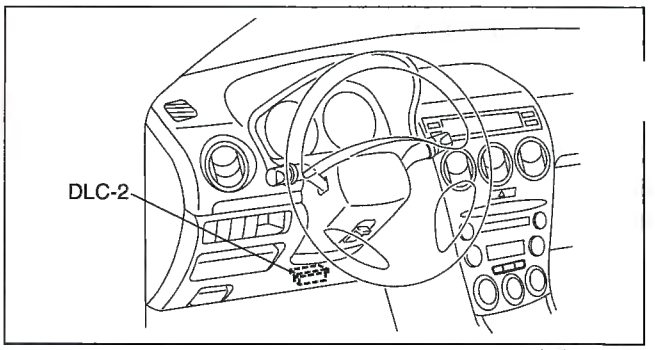

A6E3970W002

Without using WDS or equivalent

1. Short the check connector terminal F/P to body GND using a jumper wire.
2. Turn the ignition switch to ON position to operate the fuel pump.

Caution

- **The fuel pump could be damaged if it is operated (fuel pump idling) while there is no fuel in the fuel tank. Verify the amount of fuel being discharged from the hose and stop operation of the fuel pump when essentially no fuel is being discharged.**

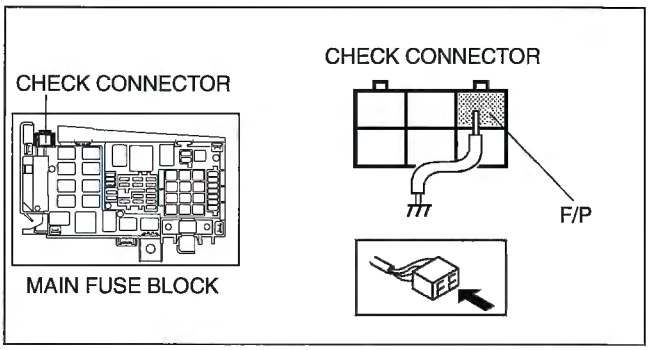

B6U0114W003

Note

- If the fuel tank is full, drain **approx. 35 L {9.2 US gal, 7.7 Imp gal}** of fuel until the fuel gauge indicates **approx. 3/8** of a tank.

6. When essentially no fuel is being discharged, stop operation of the fuel pump.
7. Disconnect the negative battery cable.
8. Remove the rear seat cushion.
9. Remove in the order indicated in the table.
10. Install in the reverse order of removal.
11. Complete the "AFTER REPAIR PROCEDURE". (See 01–14A–6 AFTER REPAIR PROCEDURE [L3, AJ].)

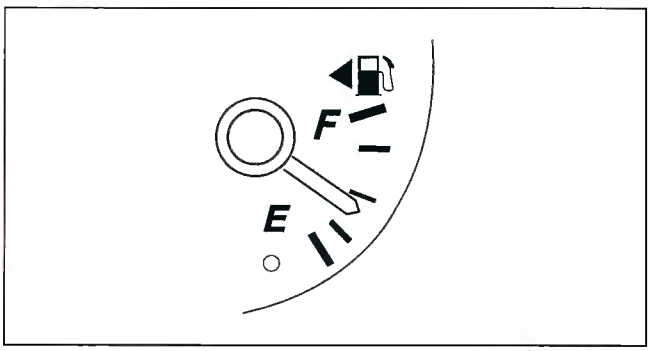

D6E114AW4702

Fuel pump cap-installed type

1	Service hole cover
2	Connector
3	Plastic fuel hose (See 01–14A–16 Plastic Fuel Hose Removal Note) (See 01–14A–20 Plastic Fuel Hose Installation Note)
4	Fuel pump cap (See 01–14A–16 Fuel Pump Cap Removal Note) (See 01–14A–17 Fuel Pump Cap Installation Note)
5	Fuel pump unit (See 01–14A–17 Fuel Pump Cap Installation Note)
6	Packing (See 01–14A–17 Fuel Pump Cap Installation Note)
7	Retainer (See 01–14A–17 Fuel Pump Cap Installation Note)

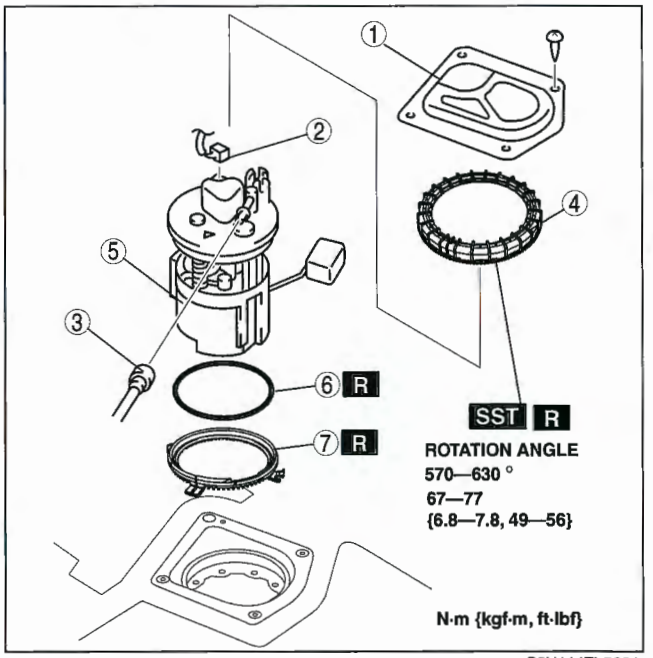

C6U114ZL5001

Screw-installed type

1	Service hole cover
2	Connector
3	Plastic fuel hose (See 01–14A–16 Plastic Fuel Hose Removal Note) (See 01–14A–20 Plastic Fuel Hose Installation Note)
4	Packing
5	Fuel pump unit

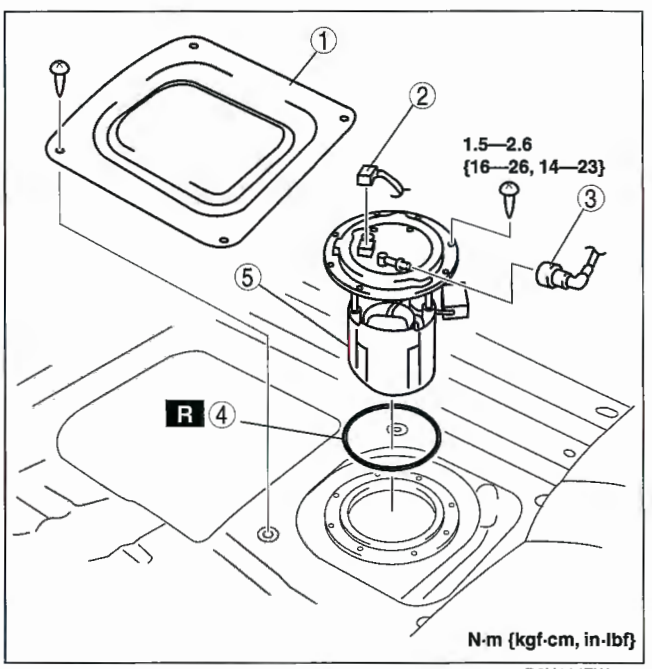

D6U114ZW8900

Plastic Fuel Hose Removal Note

Caution
- **The quick release connector may be damaged if the tab is bent excessively. Do not expand the tab over the stopper.**

1. Disconnect the quick release connector.
   (1) Push the tab on the locking coupler **90** ° until it stops.
   (2) Pull the fuel hose straight back.

Note
- The stopper may be removed from the quick connector. Take care not to lose it. Reinstall it to the quick release connector before reconnecting the fuel line.

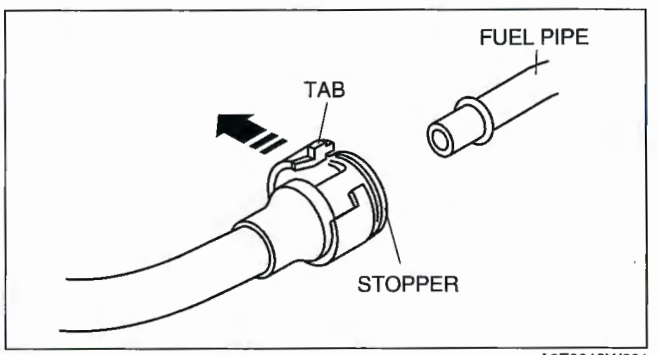

A6E3912W001

- The locking coupler has two internal locking tabs which retain the fuel pipe. Be sure that the tab on the locking coupler is rotated until it stops to release two internal locking tabs.

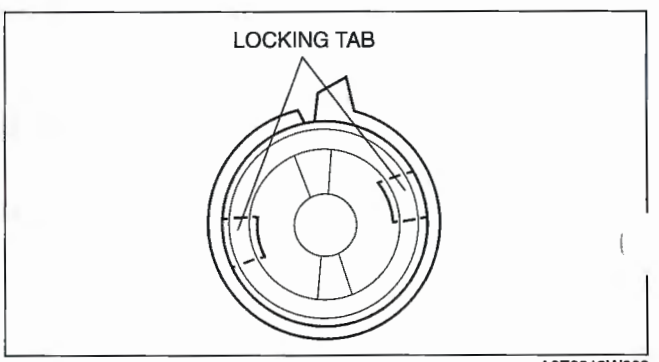

A6E3912W002

2. Cover the disconnected quick release connector and fuel pipe with vinyl sheets or the like to prevent them from being scratched or contaminated with foreign material.

Fuel Pump Cap Removal Note

Caution
- **The cap could be damaged if the SST is used with any play between the cap and the SST. Securely attach the SST so that there is no gap between the SST tabs and the side of the cap.**

1. Remove the fuel pump cap using the **SST** with two of the four brackets removed.

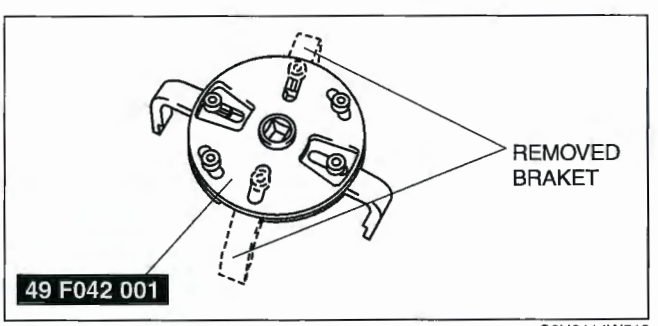

C6U0114W510

Fuel Pump Cap Installation Note

Warning
- **Make sure there is no foreign material on each of the parts. If there is foreign material on the parts, the fuel pump unit cannot be assembled correctly, which could result in fuel leakage.**

Note
- The fuel pump unit will rotate and cannot be secured in the specified position if there is any gasoline on the gasket. Thoroughly wipe away all gasoline from the gasket.

1. Replace the packing, fuel pump cap and the retainer with new parts.

Caution
- **New parts can deform depending on the temperature. If the parts deform, the fuel pump unit cannot be assembled correctly, which could result in fuel leakage. Therefore, keep new parts at room temperature for the specified period of time to stabilize the shape.**

2. Leave new parts inside for the following period of time:

Stand-by time
12 h or more

3. Install a new retainer to the fuel tank.
   (1) Align the retainer tabs (3 locations) with the fuel tank grooves.
   (2) Verify that the tabs are inserted into the grooves and the retainer is installed correctly.
   (3) Verify the retainer is not damaged.
4. Install a new packing to the fuel tank.
   (1) Verify the packing groove is clean and free of foreign material.
   (2) Install the packing to the fuel tank so that it is inserted into the fuel tank grooves.

Caution
- **Install the fuel pump unit to the fuel tank being careful not to bend the fuel sender unit arm. If the arm is bent, the fuel sender unit will not operate correctly.**

5. Install the fuel pump unit to the fuel tank.

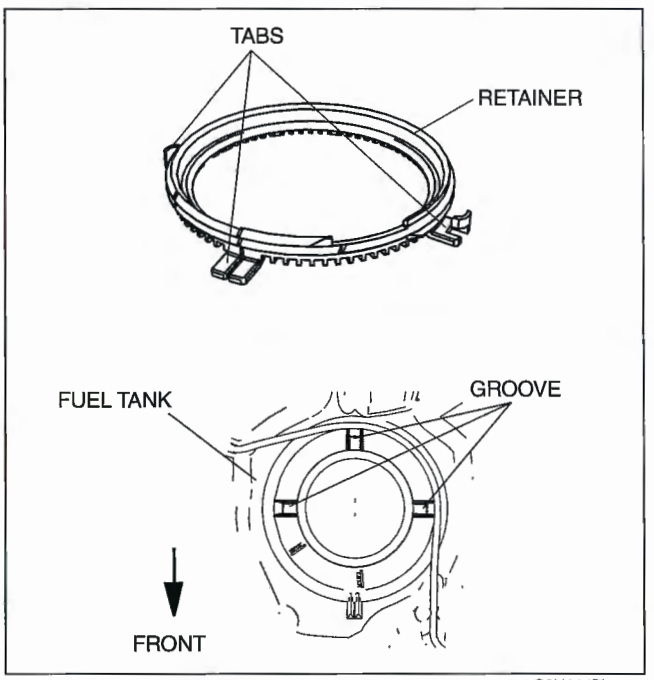

C6U114ZL5002

   (1) Align the fuel pump unit alignment mark and the floating lines on the fuel tank.

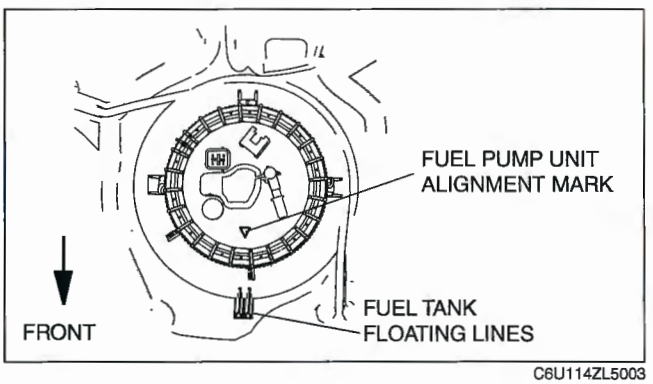

C6U114ZL5003

(2) Verify the tab on the fuel pump unit flange with the notch on the retainer.

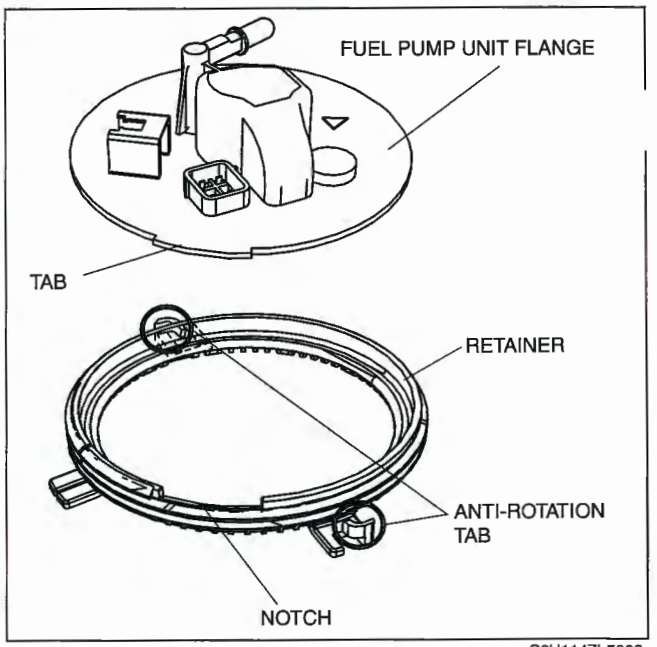

C3U114ZL5003

6. Set on a new fuel pump cap.
   (1) Apply downward force (push down) on the center of the fuel pump unit flange.

Note
- Align the fuel pump cap with the tightening start position of the retainer and tighten the fuel pump cap with the start position as **0** °.
- The fuel pump cap tightening start position is the position where the spaces between the ribs become narrow. The retainer tightening start position is the notch position.

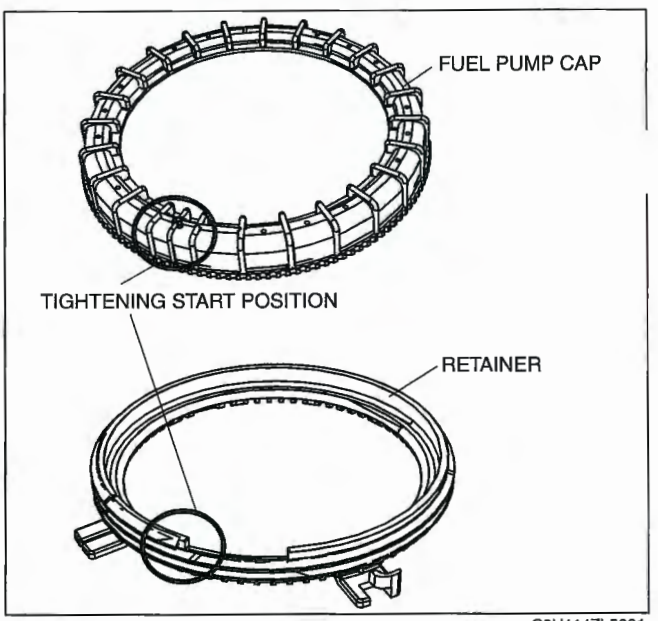

C3U114ZL5001

(2) Align the tightening start position on the fuel pump cap and the tightening start point of the retainer.

Warning
- **No grease or lubrication allowed on parts during installation. Parts could slide or they cannot be tightened to the specified torque. As a result, fuel leakage could occur.**
- **When tightening the fuel pump cap, be careful that the fuel pump unit alignment mark and the floating lines on the fuel tank have not deviated. If there is deviation, the fuel pump unit cannot be installed correctly, which could result in fuel leakage.**

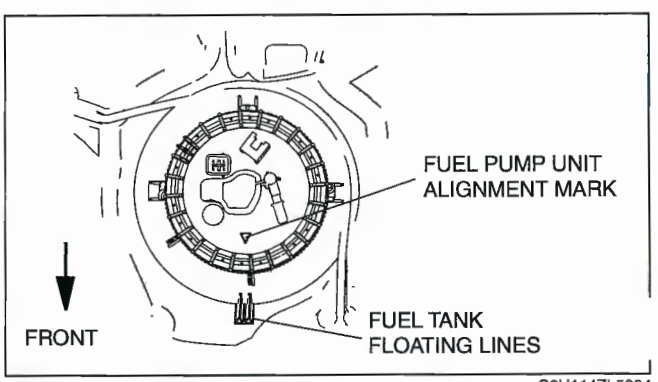

C6U114ZL5004

7. Tighten the fuel pump cap.
   (1) Tighten the fuel pump cap by hand to the specified angle or more until the flange is fixed.

Fuel pump cap rotation angle
270 ° or more

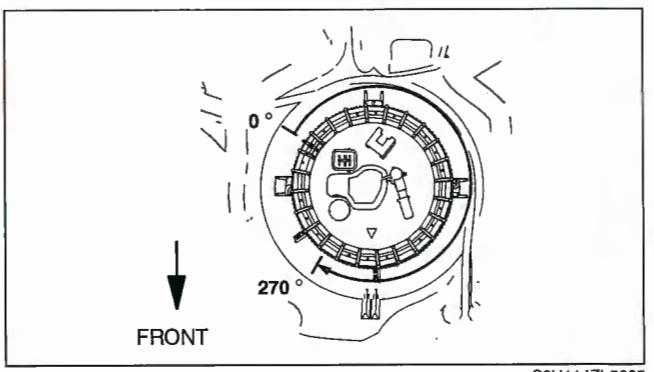

C6U114ZL5005

   (2) Verify that the fuel pump cap is tightened correctly.
      1) The gap between the bottom of the fuel pump cap and the tank surface is even all around.
         - If the fuel pump cap is not tightened uniformly, loosen it by hand and re-install it.

Caution
- **The cap could be damaged if the SST is used with any play between the cap and the SST. Securely attach the SST so that there is no gap between the SST tabs and the side of the cap.**

   (3) Install the **SST** with two of the four brackets removed.

Note
- The fuel pump cap rotation angle is the angle from the **0 °** position. The angle tightened to using the **SST** includes the angle tightened by hand.

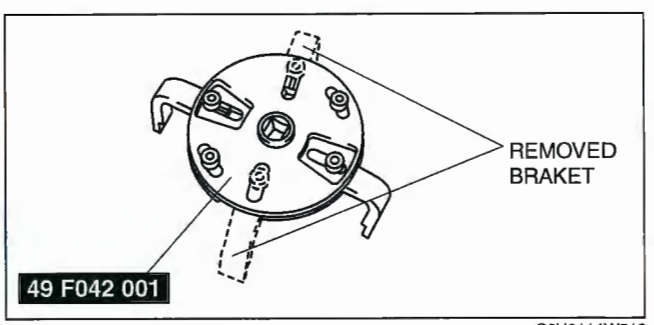

C6U0114W510

   (4) Tighten the fuel pump cap to the specified torque and to the specified angle or more.

Fuel pump cap rotation angle
570—630 °
Fuel pump cap tightening torque
67—77 N·m {6.8—7.8 kgf·m, 49—56 ft·lbf}

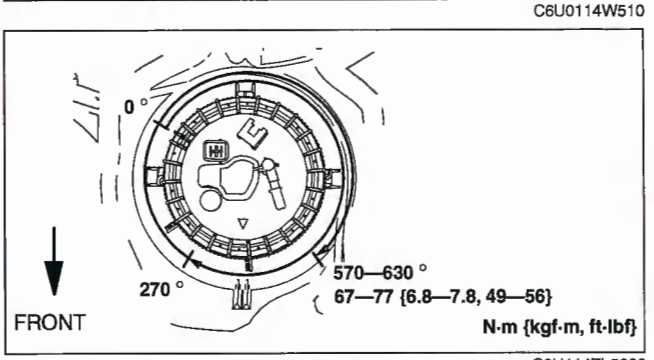

C6U114ZL5006

   (5) Verify that the fuel pump cap is tightened correctly.
      1) The gap between the top of the fuel pump unit flange and the fuel pump cap is even all around.
         - If it is not tightened uniformly, re-install it using the following procedure.
      2) The gap between the fuel pump unit and fuel tank is even all around.
         - If it is not tightened uniformly, re-install it using the following procedure.
      3) Verify that the fuel pump unit alignment mark and the floating lines on the fuel tank are aligned.
         - If they are not aligned, re-install it using the following procedure.

Caution
- **The cap could be damaged if the SST is used with any play between the cap and the SST. Securely attach the SST so that there is no gap between the SST tabs and the side of the cap.**

1. Install the **SST** with two of the four brackets removed.
2. Remove the fuel pump cap, fuel pump unit, packing, and retainer.
3. Verify that the retainer is not damaged.
   - If both of the retainer anti-rotation tabs are broken, replace it with new one.
4. Return to Step 2 and re-install.

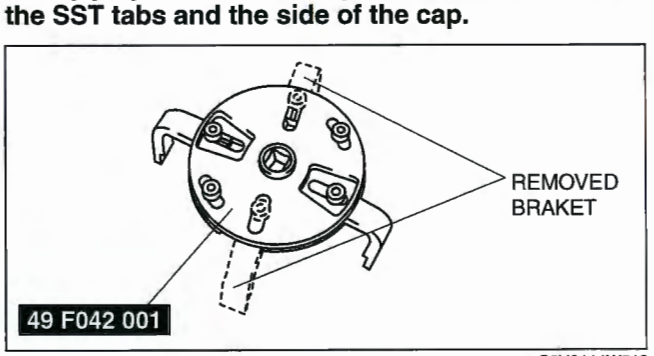

C6U0114W510

Plastic Fuel Hose Installation Note

Note
- A checker tab is integrated with quick release connector for new plastic fuel hoses. The checker tab will b released from the quick release connector after it is completely engaged with the fuel pipe.

1. Inspect the fuel pump unit sealing surface for damage and deformation, and replace if necessary.
   - If the quick release connector O-ring is damaged, replace the plastic fuel hose.

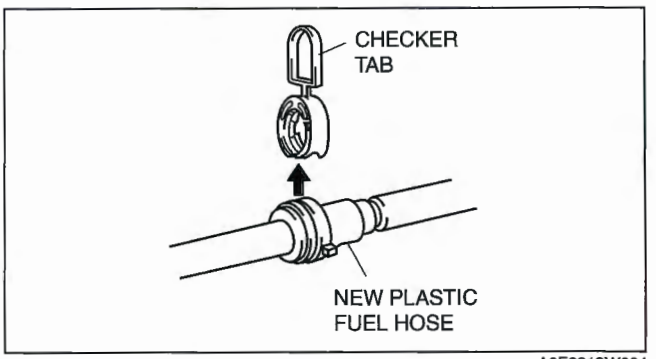

A6E3912W004

2. Slightly apply clean engine oil to the sealing surface of the fuel pump unit.
3. Align the fuel pipe on the fuel pump unit and quick release connector so that the tabs of the retainer are correctly fitted into the quick release connector. Push the quick release connector straight into the retainer until a click is heard.
4. Lightly pull and push the quick release connector a few times by hand and verify that it can move **2.0—3.0 mm {0.08—0.11 in}** and it is connected securely.
   - If the quick release connector does not move at all, verify that O-ring is not damaged and slipped, and reconnect the quick release connector.

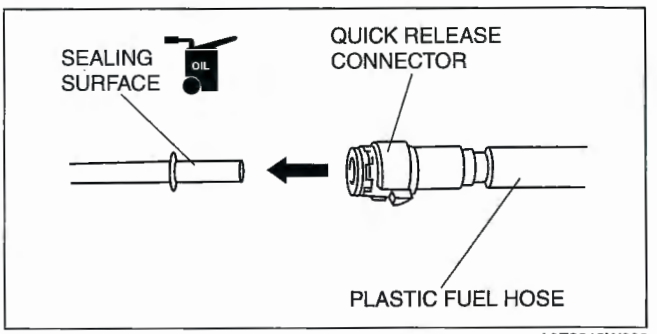

A6E3912W006

FUEL PUMP UNIT DISASSEMBLY/ASSEMBLY [L3, AJ]

E6U011413350W02

Warning
- **Fuel line spills and leakage are dangerous. Fuel can ignite and cause serious injuries or death and damage. Fuel can also irritate skin and eyes. To prevent this, do not damage the sealing surface of the fuel pump unit when removing or installing.**

1. Disassemble in the order indicated in the table.
2. Assemble in the reverse order of disassembly.

1	Fuel pump unit
2	Fuel gauge sender unit

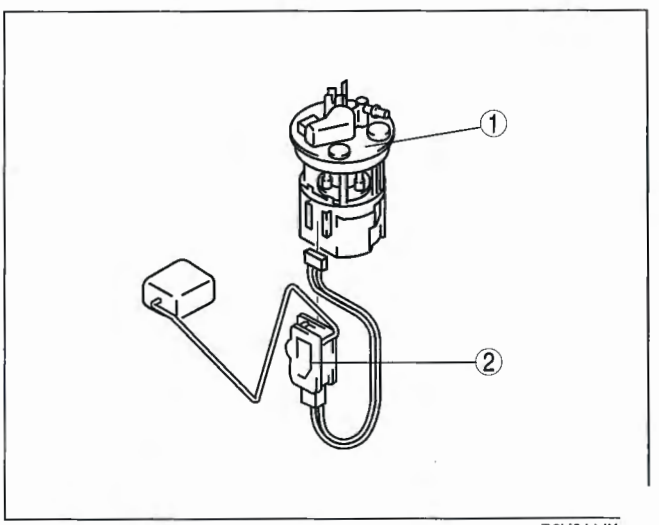

B6U0114W

FUEL PUMP UNIT INSPECTION [L3, AJ]

E6U011413350W03

Continuity Inspection

Note
- Perform the following test only when directed.

1. Disconnect the negative battery cable.
2. Remove the service hole cover. (See 01–14A–13 FUEL PUMP UNIT REMOVAL/INSTALLATION [L3, AJ].)
3. Disconnect the fuel pump unit connector.
4. Inspect for continuity between fuel pump unit connector terminals B and D.
   - If there is no continuity, replace the fuel pump body.
   - If as specified, carry out the "Circuit Open/Short Inspection".

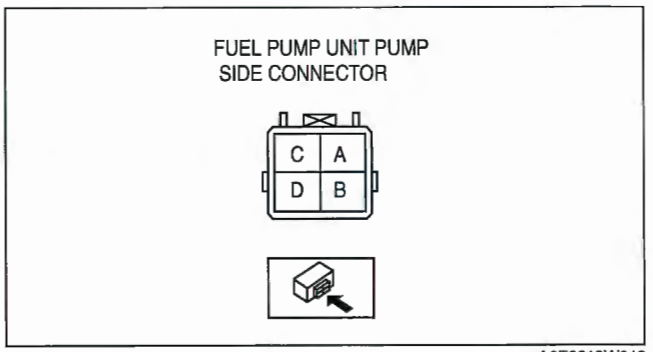

A6E3912W018

Circuit Open/Short Inspection

1. Inspect the following wiring harnesses as for open or short circuit (continuity check).

Open circuit
- If there is no continuity, there is an open circuit. Repair or replace the wiring harness.
  - — Fuel pump unit terminal D and body GND
  - — Fuel pump unit terminal B and fuel pump relay terminal C

Short circuit
- If there is continuity, there is a short circuit. Repair or replace the wiring harness.
  - — Fuel pump unit terminal D and power supply
  - — Fuel pump unit terminal B and body GND

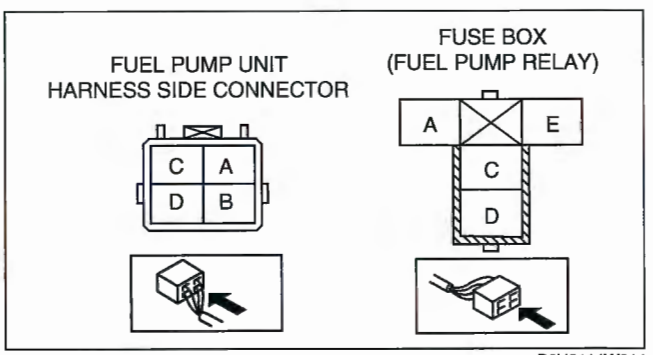

B6U0114W014

Fuel Pump Hold Pressure Inspection

Warning
- **Fuel line spills and leakage are dangerous. Fuel can ignite and cause serious injuries or death and damage. Always carry out the following procedure with the engine stopped.**

Caution
- **Disconnecting/connecting the quick release connector without cleaning it may cause damage to the fuel pipe and quick release connector. Always clean the quick release connector joint area before disconnecting/connecting using a cloth or soft brush, and make sure that it is free of foreign material.**

Note
- Perform the following test only when directed.

1. Complete the "BEFORE REPAIR PROCEDURE". (See 01–14A–6 BEFORE REPAIR PROCEDURE [L3, AJ].)
2. Disconnect the negative battery cable.
3. Remove the battery and battery tray.

Caution
- **The quick release connector may be damaged if the tab is bent excessively. Do not expand the tab over the stopper.**

4. Disconnect the quick release connector from the fuel tank as follows:
   (1) Push the tab on the locking coupler **90°** until it stops.
   (2) Pull the fuel hose straight back.

Note
- The stopper may be removed from the quick connector. Take care not to lose it. Reinstall it to the quick release connector before reconnecting the fuel line.

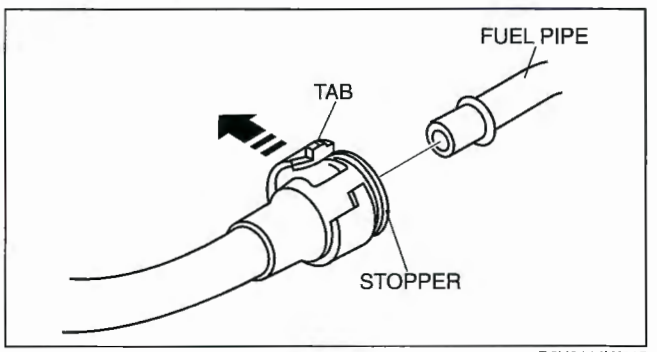

B6U0114W015

- The locking coupler has two internal locking tabs which distributor pipe. Be sure that the tab on the locking coupler is rotated until it stops to release two internal locking tabs.

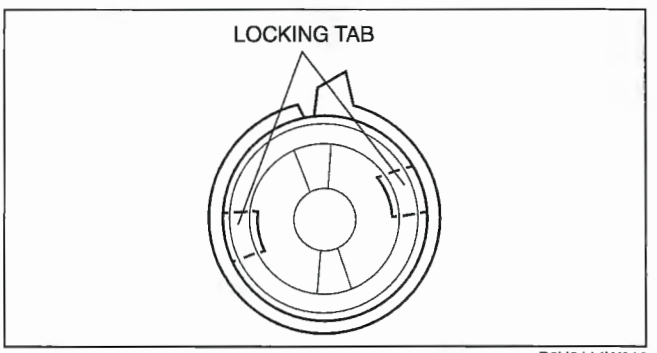

B6U0114W016

5. Cover the disconnected quick release connector with vinyl sheet or the like to prevent it from being scratched or contaminated with foreign material.

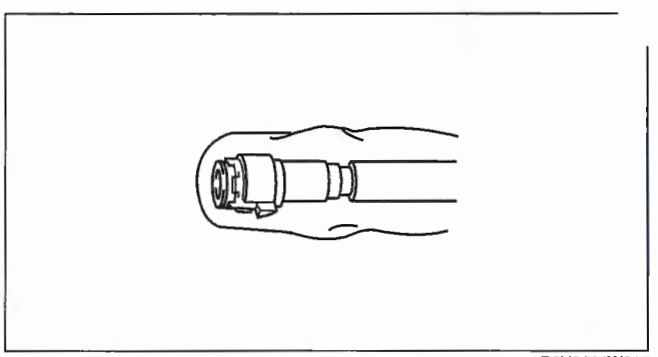
B6U0114W017

6. Turn the lever **90°** against the hose of the **SST** to plug the **SST** outlet.
7. Push the **SST** quick release connector into the fuel pipe until a click is heard.
8. Set the fuel hose into a container to avoid fuel spills.
9. Connect the negative battery cable.

Caution
- **Connecting to the wrong check connector terminal may cause malfunction. Carefully connect only to the specified terminal.**

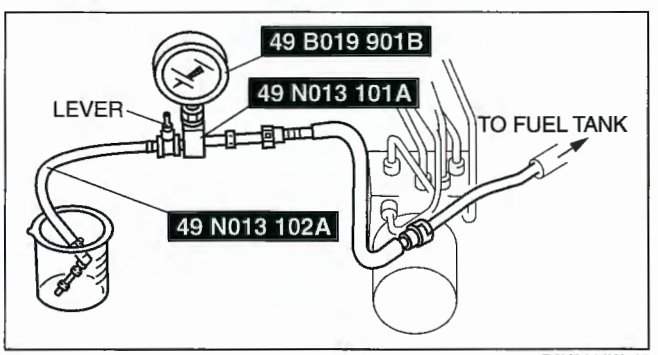

B6U0114W018

10. Short the check connector terminal F/P to body GND using a jumper wire.
11. Turn the ignition switch to the ON position to operate the fuel pump.
12. Turn the ignition switch to the LOCK position.
13. Measure the fuel pump hold pressure **after 5 min**.
    - If not as specified, replace the fuel pump after inspecting the following:
      — Fuel line for clogging or leakage

    Fuel pump hold pressure
    L3: More than 200 kPa {2.0 kgf/cm^2, 29 psi}
    AJ: More than 250 kPa {2.5 kgf/cm^2, 36 psi}

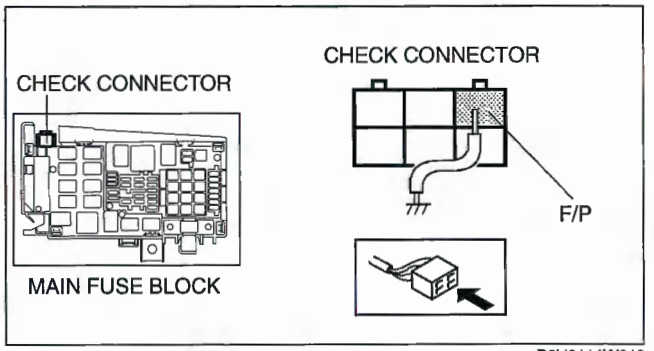

B6U0114W019

14. Disconnect the jumper wire.
15. Disconnect the **SST**.

Note
- A checker tab is integrated with the quick release connector for new plastic fuel hoses. The checker tab will be released from the quick release connector after it is completely engaged with the fuel pipe.

16. Inspect the plastic fuel hose and fuel pipe sealing surface for damage and deformation, and replace if necessary.
    - If the quick release connector O-ring is damaged or has slipped, replace the plastic fuel hose.
17. Apply a small amount of clean engine oil to the sealing surface of the fuel pipe.
18. Reconnect the plastic fuel hose straight to the fuel pipe until a click is heard.
19. Lightly pull and push the quick release connector a few times by hand and verify that it can move **2.0—3.0 mm {0.08—0.11 in}** and it is connected securely.
    - If quick release connector does not move at all, verify that O-ring is not damaged or slipped, and reconnect the quick release connector.

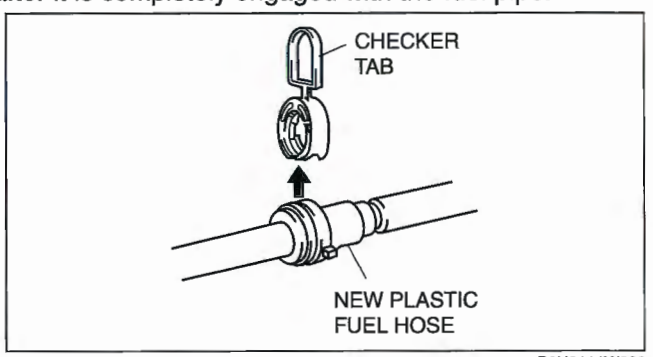

B6U0114W020

20. Complete the "AFTER REPAIR PROCEDURE". (See 01–14A–6 AFTER REPAIR PROCEDURE [L3, AJ].)

FUEL INJECTOR REMOVAL/INSTALLATION [L3]

E6U011413250W01

Caution

- **Disconnecting/connecting the quick release connector without cleaning it may cause damage to the fuel pipe and quick release connector. Always clean the quick release connector joint area before disconnecting/connecting using a cloth or soft brush, and make sure that it is free of foreign material.**

1. Complete the "BEFORE REPAIR PROCEDURE". (See 01–14A–6 BEFORE REPAIR PROCEDURE [L3, AJ].)
2. Disconnect the negative battery cable.
3. Remove in the order indicated in the table.

1	Fuel injector connectors
2	Plastic fuel hose (See 01–14A–24 Plastic Fuel Hose Removal Note) (See 01–14A–26 Plastic Fuel Hose Installation Note)
3	Fuel distributor
4	Fuel injector (See 01–14A–25 Fuel Injector Removal Note) (See 01–14A–27 Fuel Injector Installation Note)

4. Install in the reverse order of removal.
5. Complete the "AFTER REPAIR PROCEDURE". (See 01–14A–6 AFTER REPAIR PROCEDURE [L3, AJ].)

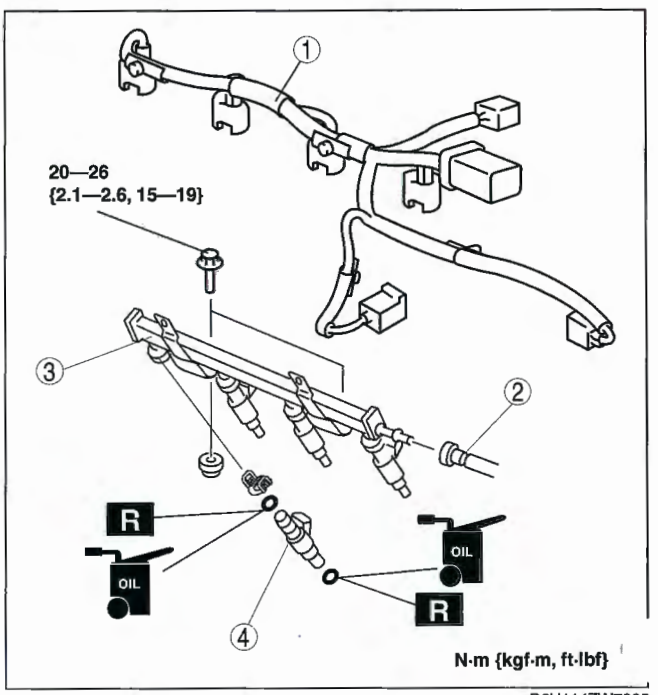

D6U114ZW7005

Plastic Fuel Hose Removal Note

Caution

- **The quick release connector may be damaged if the tab is bent excessively. Do not expand the tab over the stopper.**

1. Disconnect the quick release connector.
   (1) Push the tab on the locking coupler **90°** until it stops.
   (2) Pull the fuel hose straight back.

Note

- The stopper may be removed from the quick connector. Take care not to lose it. Reinstall it to the quick release connector before reconnecting the fuel line.

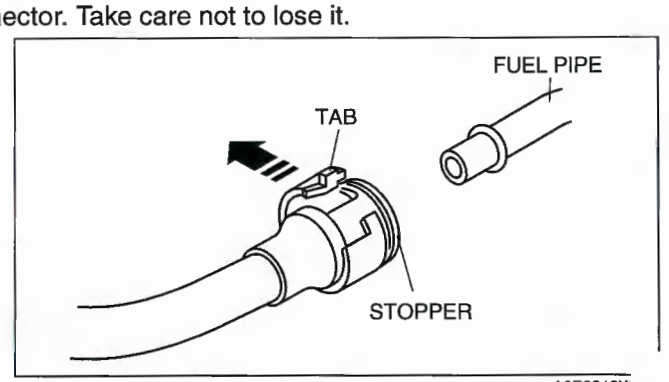

A6E3912W

- The locking coupler has two internal locking tabs which retain the fuel pipe. Be sure that the tab on the locking coupler is rotated until it stops to release two internal locking tabs.

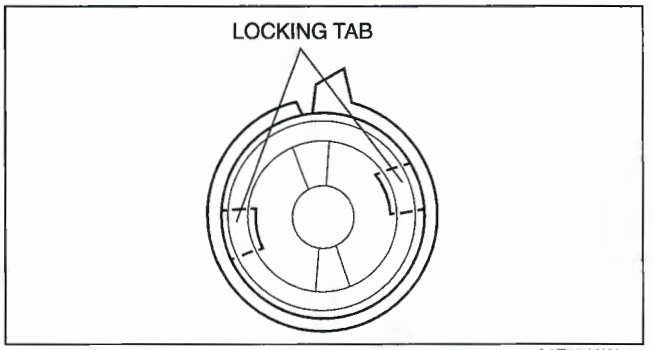

A6E3912W002

2. Cover the disconnected quick release connector and fuel pipe with vinyl sheets or the like to prevent them from being scratched or contaminated with foreign material.

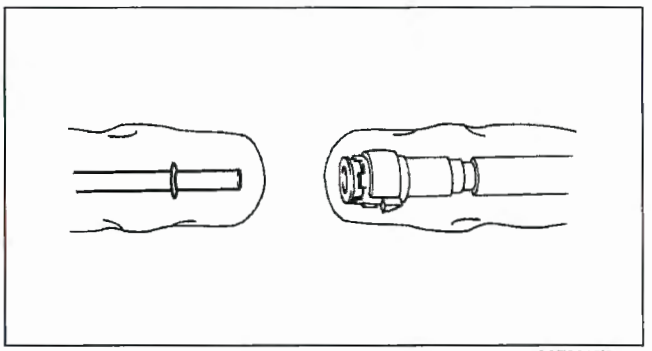
A6E3912W039

Fuel Injector Removal Note

Caution

- **Use of a deformed injector retaining clip will cause the injector to not engage correctly. Always use a new clip when reattaching the injector, otherwise it may cause the injector to rotate.**

1. Insert a screwdriver between the injector cup and the clip fingers.

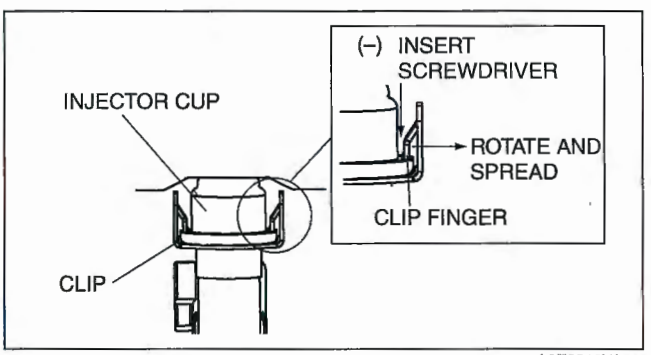

A6E3912W040

Note

- When rotating the screwdriver to spread the clip fingers, bend them sufficiently to make sure they release from the notched edge of the injector cup.

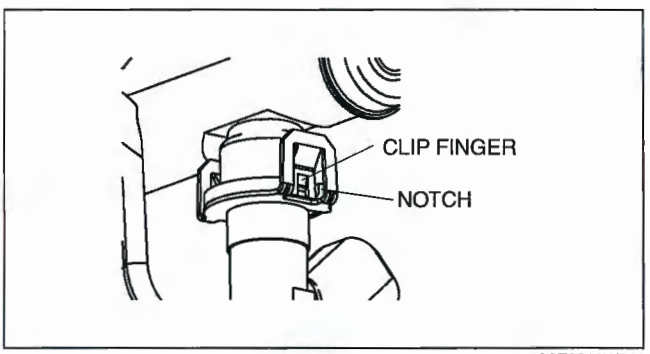

A6E3912W041

2. Rotate the screwdriver to spread the clip fingers and remove them from the injector cup.
3. Pull the injector and clip out of the rail.

4. Remove the clip from the injector according to the following steps:
   (1) Grasp the clip with a pair of pliers.
   (2) Pull the clip parallel to the injector groove, and remove it from the injector.
   (3) Discard the clip.

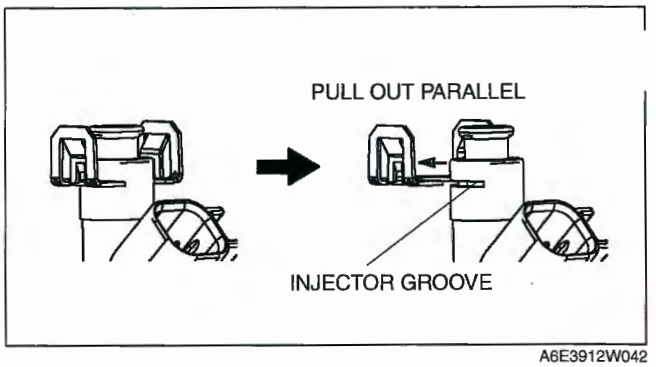

A6E3912W042

Plastic Fuel Hose Installation Note

Note
- A checker tab is integrated with quick release connector for new plastic fuel hoses. The checker tab will be released from the quick release connector after it is completely engaged with the fuel pipe.

1. Inspect the fuel pump unit sealing surface for damage and deformation, and replace if necessary.
   - If the quick release connector O-ring is damaged, replace the plastic fuel hose.

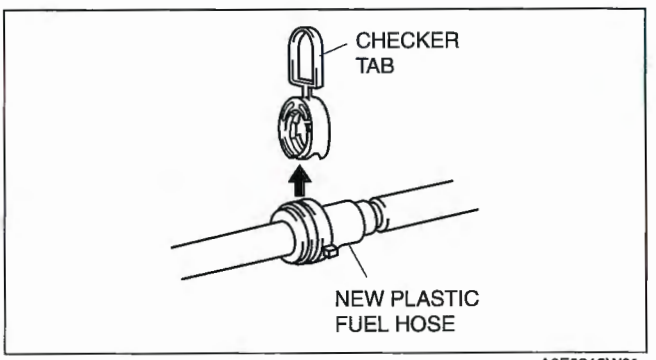

A6E3912W0

2. Slightly apply clean engine oil to the sealing surface of the fuel pump unit.
3. Align the fuel pipe on the fuel pump unit and quick release connector so that the tabs of the retainer are correctly fitted into the quick release connector. Push the quick release connector straight into the retainer until a click is heard.
4. Lightly pull and push the quick release connector a few times by hand and verify that it can move **2.0—3.0 mm {0.08—0.11 in}** and it is connected securely.
   - If the quick release connector does not move at all, verify that O-ring is not damaged and slipped, and reconnect the quick release connector.

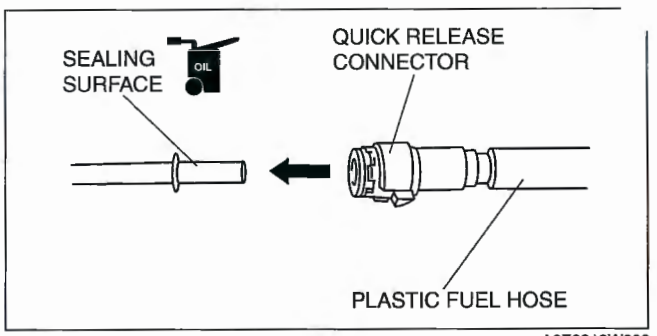

A6E3912W006

Fuel Injector Installation Note

1. Lightly lubricate the injector groove and O-ring.
2. Pre-attach a new clip in the injector groove.

Note

- When the clip is attached correctly, the central area of the injector and the clip finger positions are aligned.

3. Hold the injector firmly, and press the clip into the injector until the clip stops sliding.
4. Verify that the injector connector position is correct, and press the injector and clip into the injector cup. Continue pressing until the clip contacts the lower surface of the injector cup.
5. Verify that the injector and clip are correctly attached with the clip locked onto the injector cup notch.

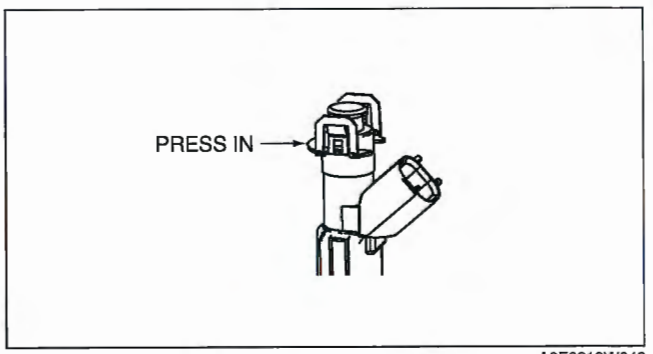

A6E3912W043

FUEL INJECTOR REMOVAL/INSTALLATION [AJ]

E6U011413250W02

1. Complete the "BEFORE REPAIR PROCEDURE". (See 01–14A–6 BEFORE REPAIR PROCEDURE [L3, AJ].)
2. Disconnect the negative battery cable.
3. Remove the dynamic chamber. (See 01–13C–2 INTAKE AIR SYSTEM REMOVAL/INSTALLATION [AJ].)
4. Disconnect the fuel injector connectors and remove the wiring harness from the fuel distributor.
5. Remove in the order indicated in the table.

1	Plastic fuel hose (See 01–14A–28 Plastic Fuel Hose Removal Note) (See 01–14A–29 Plastic Fuel Hose Installation Note)
2	Fuel distributor
3	Fuel injector (See 01–14A–29 Fuel Injector Installation Note)

Caution

- **Disconnecting/connecting the quick release connector without cleaning it may possibly cause damage to the fuel pipe and quick release connector. Always clean the quick release connector joint area before disconnecting/connecting using a cloth or soft brush, and make sure that it is free of foreign material.**

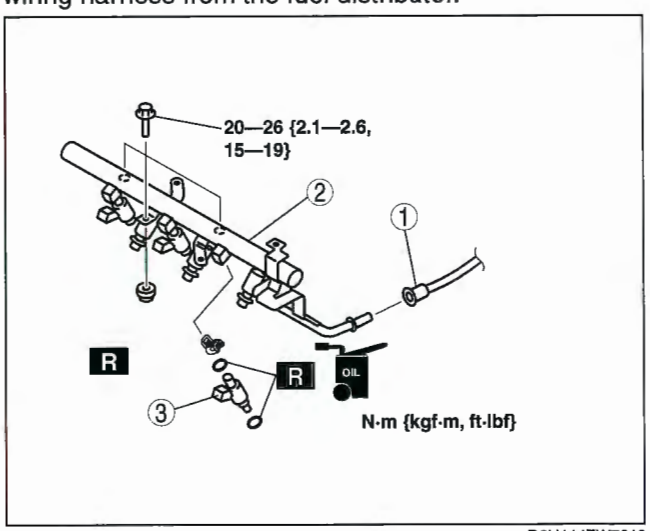

D6U114ZW7010

6. Install in the reverse order of removal.
7. Complete the "AFTER REPAIR PROCEDURE". (See 01–14A–6 AFTER REPAIR PROCEDURE [L3, AJ].)

Plastic Fuel Hose Removal Note

Caution
- **The quick release connector may be damaged if the tab is bent excessively. Do not expand the tab over the stopper.**

1. Disconnect the quick release connector.
   (1) Push the tab on the locking coupler **90°** until it stops.
   (2) Pull the fuel hose straight back.

Note
- The stopper may be removed from the quick connector. Take care not to lose it. Reinstall it to the quick release connector before reconnecting the fuel line.

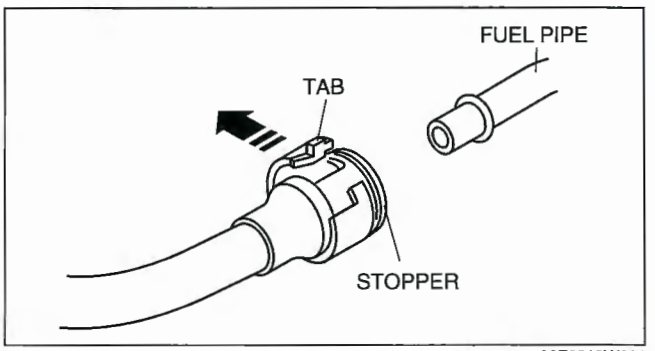

A6E3912W001

- The locking coupler has two internal locking tabs which retain the fuel pipe. Be sure that the tab on the locking coupler is rotated until it stops to release two internal locking tabs.

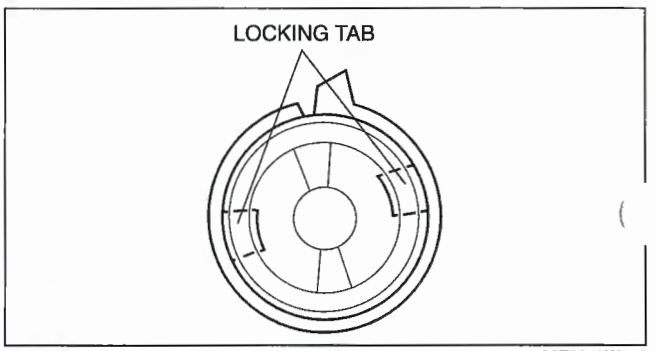

A6E3912W002

2. Cover the disconnected quick release connector and fuel pipe with vinyl sheets or the like to prevent them from being scratched or contaminated with foreign material.

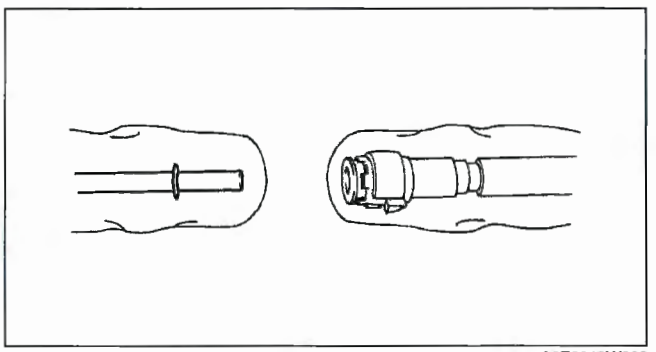
A6E3912W039

Plastic Fuel Hose Installation Note

Note

- A checker tab is integrated with quick release connector for new plastic fuel hoses. The checker tab will be released from the quick release connector after it is completely engaged with the fuel pipe.

1. Inspect the fuel pump unit sealing surface for damage and deformation, and replace if necessary.
   - If the quick release connector O-ring is damaged, replace the plastic fuel hose.

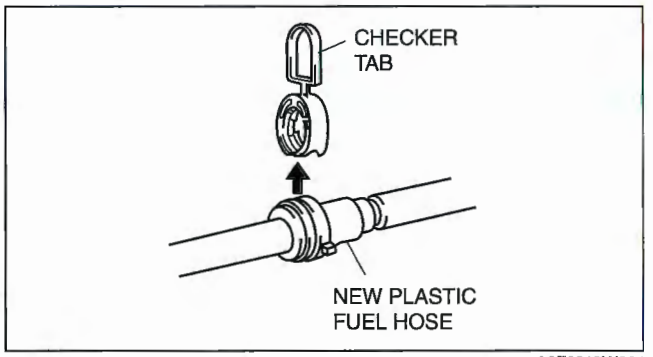

A6E3912W004

2. Slightly apply clean engine oil to the sealing surface of the fuel pump unit.
3. Align the fuel pipe on the fuel pump unit and quick release connector so that the tabs of the retainer are correctly fitted into the quick release connector. Push the quick release connector straight into the retainer until a click is heard.
4. Lightly pull and push the quick release connector a few times by hand and verify that it can move **2.0—3.0 mm {0.08—0.11 in}** and it is connected securely.
   - If the quick release connector does not move at all, verify that O-ring is not damaged and slipped, and reconnect the quick release connector.

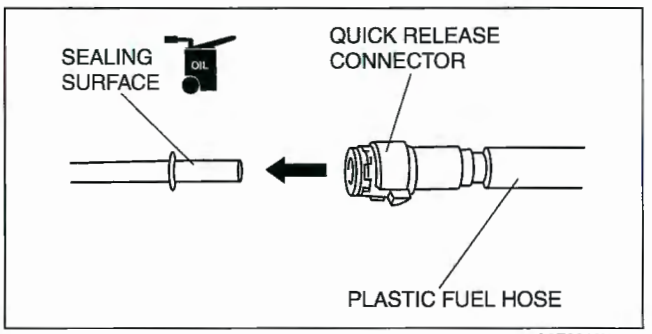

A6E3912W006

Fuel Injector Installation Note

1. Lightly lubricate the injector groove and O-ring.
2. Pre-attach a new clip in the injector groove.

Note

- When the clip is attached correctly, the central area of the injector and the clip finger positions are aligned.

3. Hold the injector firmly, and press the clip into the injector until the clip stops sliding.
4. Verify that the injector connector position is correct, and press the injector and clip into the injector cup. Continue pressing until the clip contacts the lower surface of the injector cup.
5. Verify that the injector and clip are correctly attached with the clip locked onto the injector cup notch.

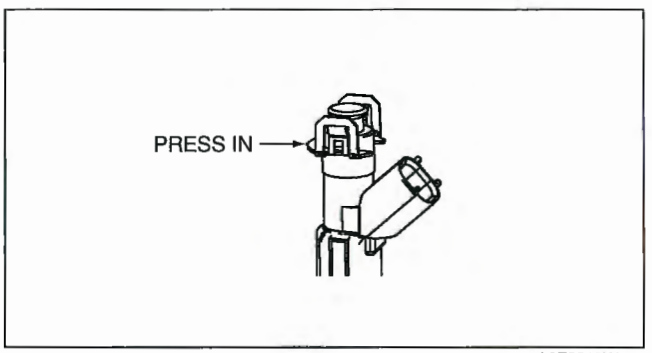

A6E3912W043

FUEL INJECTOR INSPECTION [L3]

E6U011413250W03

Operation Test

1. Carry out the "Fuel Injector Operation Inspection". (See 01–03A–68 Fuel Injector Operation Inspection.)
   - If not as specified, perform the further inspection for the fuel injectors.

Resistance Inspection

Note
- Perform the following procedure only when directed.

1. Turn the ignition switch to LOCK position.
2. Disconnect the negative battery cable.
3. Disconnect the fuel injector connectors.
4. Measure the resistance of the fuel injector using an ohmmeter.
   - If not as specified, replace the fuel injector. (See 01–14A–24 FUEL INJECTOR REMOVAL/INSTALLATION [L3].)
   - If as specified but "Operation Test" is failed, carry out the "Circuit Open/Short Inspection". Inspect for open or short circuit.

Fuel injector resistance
11.4—12.6 ohms [20 °C {68 °F}]

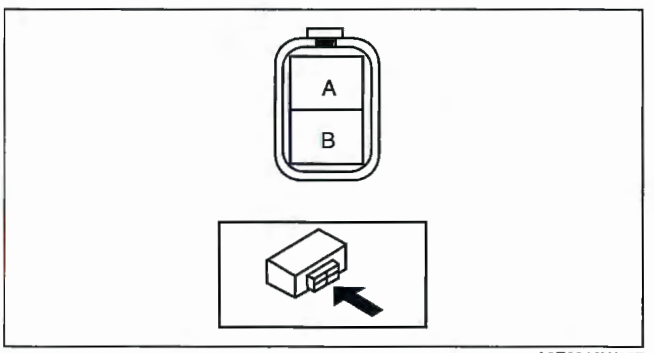

A6E3912W007

Circuit Open/Short Inspection

1. Disconnect the PCM connector. (See 01–40A–9 PCM REMOVAL/INSTALLATION [L3].)
2. Inspect the following wiring harnesses for open or short circuit (continuity check).

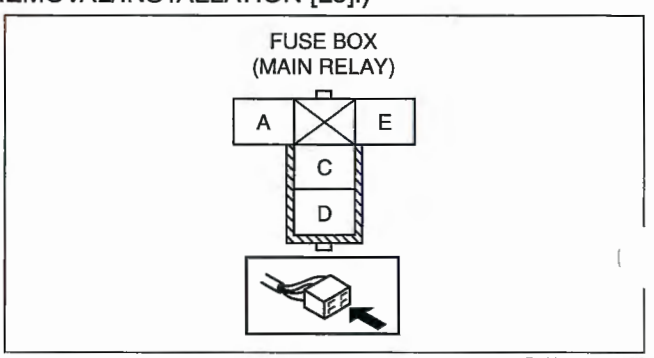

D6U114ZW7100

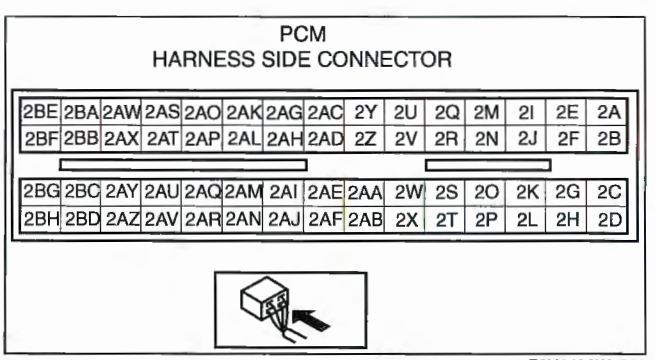

E6U140AW5992

Open circuit
- If there is no continuity, there is an open circuit. Repair or replace the wiring Except.
  - — No.1 cylinder fuel injector terminal B and PCM terminal 2BB
  - — No.2 cylinder fuel injector terminal B and PCM terminal 2BC
  - — No.3 cylinder fuel injector terminal B and PCM terminal 2BD
  - — No.4 cylinder fuel injector terminal B and PCM terminal 2AZ
  - — No.1 cylinder fuel injector terminal A and main relay terminal C through common connector
  - — No.2 cylinder fuel injector terminal A and main relay terminal C through common connector
  - — No.3 cylinder fuel injector terminal A and main relay terminal C through common connector
  - — No.4 cylinder fuel injector terminal A and main relay terminal C through common connector

Short circuit
- If there is continuity, there is a short circuit. Repair or replace the harness.
  - — No.1 cylinder fuel injector terminal B and body GND
  - — No.2 cylinder fuel injector terminal B and body GND
  - — No.3 cylinder fuel injector terminal B and body GND
  - — No.4 cylinder fuel injector terminal B and body GND
  - — No.1 cylinder fuel injector terminal A and power supply
  - — No.2 cylinder fuel injector terminal A and power supply
  - — No.3 cylinder fuel injector terminal A and power supply
  - — No.4 cylinder fuel injector terminal A and power supply

Fuel Leakage Inspection

Warning

- **Fuel line spills and leakage are dangerous. Fuel can ignite and cause serious injuries or death and damage. Always carry out the following procedure with the engine stopped.**

Note

- Perform the following procedure only when directed.

1. Complete the "BEFORE REPAIR PROCEDURE". (See 01–14A–6 BEFORE REPAIR PROCEDURE [L3, AJ].)
2. Disconnect the negative battery cable.
3. Remove the fuel injectors together with the fuel distributor with the fuel hose connected. (See 01–14A–24 FUEL INJECTOR REMOVAL/INSTALLATION [L3].)
4. Fasten the fuel injectors firmly to the fuel distributor with wire.
5. Connect the negative battery cable.

Caution

- **Connecting to the wrong check connector terminal may only to cause malfunction. Carefully connect the specified terminal.**

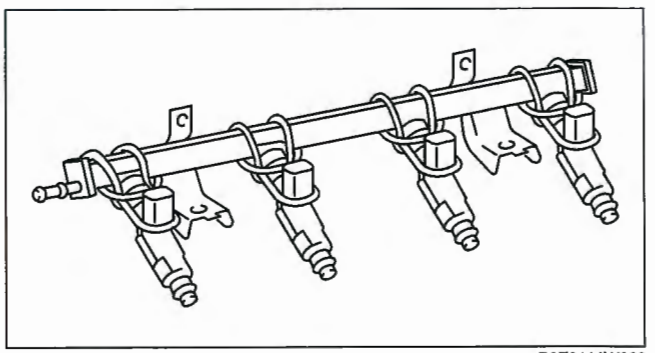

B3E0114W028

6. Short the check connector terminal F/P to body GND using a jumper wire.
7. Turn the ignition switch to ON position to operate the fuel pump.

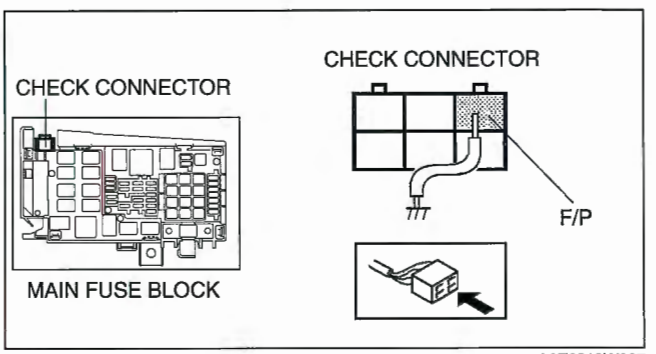

A6E3912W037

8. Tilt the fuel injectors **approx. 42°.**
9. Verify that fuel leakage from the fuel injector nozzles is within the specification.
   - If not as specified, replace the fuel injector.

Fuel injector leakage amount
Less than 1 drop/2 min

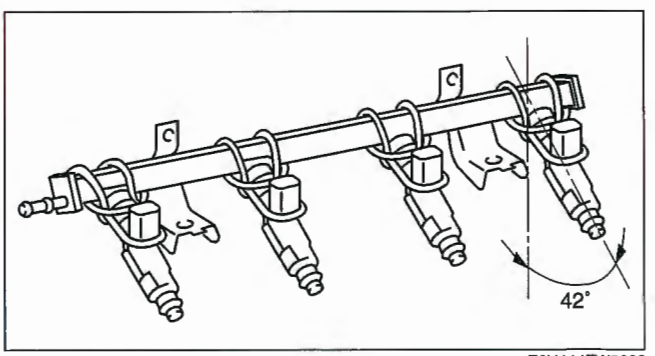

E6U114ZW5200

10. Turn the ignition switch to LOCK position and remove the jumper wire.
11. Complete the "AFTER REPAIR PROCEDURE". (See 01–14A–6 AFTER REPAIR PROCEDURE [L3, AJ].)

Volume Inspection

Warning
- **Fuel line spills and leakage are dangerous. Fuel can ignite and cause serious injuries or death and damage. Always carry out the following procedure with the engine stopped.**

Note
- If there is an after market fuel injector tester, perform the following procedure.
- If there is no an aftermarket fuel injector tester, perform "Operation Test", "Resistance Inspection", and "Fuel Leakage Test" to verify the fuel injector is okay or not.

1. Complete the "BEFORE REPAIR PROCEDURE". (See 01–14A–6 BEFORE REPAIR PROCEDURE [L3, AJ].)
2. Disconnect the negative battery cable.
3. Remove the fuel injectors. (See 01–14A–24 FUEL INJECTOR REMOVAL/INSTALLATION [L3].)
4. Connect the fuel injector to the fuel injector tester.
5. Measure the injection volume of each fuel injector using a graduated container.
   - If not as specified, replace the fuel injector.

Fuel injection volume
75—79 ml {75—79 cc, 2.54—2.67 fl oz}/15 s

6. Turn the ignition switch to the LOCK position and disconnect the jumper wire.
7. Complete the "AFTER REPAIR PROCEDURE". (See 01–14A–6 AFTER REPAIR PROCEDURE [L3, AJ].)

Atomization

1. Inspect atomization pattern.
   - If the atomization is faulty, replace the fuel injector.

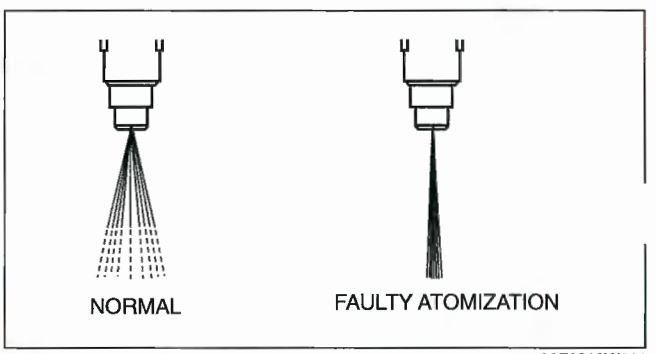

A6E3912W011

FUEL INJECTOR INSPECTION [AJ]

E6U011413250W04

Operation Test

1. Carry out the "Fuel Injector Operation Inspection". (See 01–03C–67 Fuel Injector Operation Inspection.)
   - If not as specified, perform following inspections for the fuel injectors.

Resistance Inspection

Note
- Perform the following procedure only when directed.

1. Turn the ignition switch to the LOCK position.
2. Disconnect the negative battery cable.
3. Disconnect the fuel injector connectors.

4. Measure the resistance of the fuel injector using an ohmmeter.
   - If not as specified, replace the fuel injector. (See 01–14A–27 FUEL INJECTOR REMOVAL/INSTALLATION [AJ].)
   - If as specified but "Operation Test" is failed, carry out the "Circuit Open/Short Inspection". Inspect for open or short circuit.

Fuel injector resistance
13.1—14.5 ohms [20 °C {68 °F}]

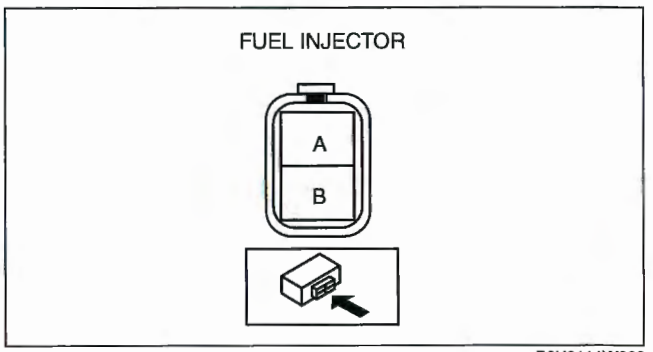

B6U0114W033

Circuit Open/Short Inspection

1. Disconnect the PCM connector. (See 01–40C–5 PCM REMOVAL/INSTALLATION [AJ].)
2. Inspect the following wiring harnesses for open or short circuit (continuity check).

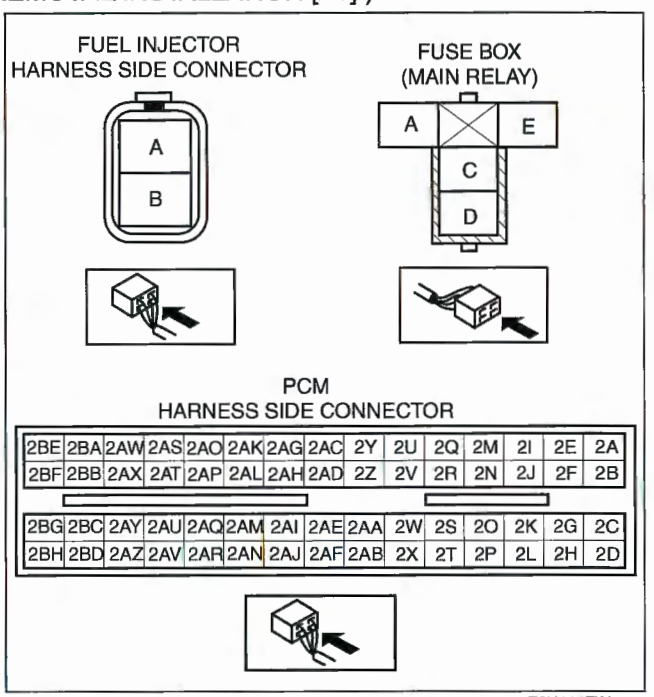

E6U114ZW5201

Open circuit

- If there is no continuity, there is an open circuit. Repair or replace the wiring harness.
  - — No.1 cylinder fuel injector terminal 1 and PCM terminal 2I
  - — No.2 cylinder fuel injector terminal 1 and PCM terminal 2J
  - — No.3 cylinder fuel injector terminal 1 and PCM terminal 2K
  - — No.4 cylinder fuel injector terminal 1 and PCM terminal 2E
  - — No.5 cylinder fuel injector terminal 1 and PCM terminal 2F
  - — No.6 cylinder fuel injector terminal 1 and PCM terminal 2G
  - — No.1 cylinder fuel injector terminal 2 and main relay terminal C through common connector
  - — No.2 cylinder fuel injector terminal 2 and main relay terminal C through common connector
  - — No.3 cylinder fuel injector terminal 2 and main relay terminal C through common connector
  - — No.4 cylinder fuel injector terminal 2 and main relay terminal C through common connector
  - — No.5 cylinder fuel injector terminal 2 and main relay terminal C through common connector
  - — No.6 cylinder fuel injector terminal 2 and main relay terminal C through common connector

Short circuit

- If there is continuity, there is a short circuit. Repair or replace the wiring harness.
  - — No.1 cylinder fuel injector terminal 1 and body GND
  - — No.2 cylinder fuel injector terminal 1 and body GND
  - — No.3 cylinder fuel injector terminal 1 and body GND
  - — No.4 cylinder fuel injector terminal 1 and body GND
  - — No.5 cylinder fuel injector terminal 1 and body GND
  - — No.6 cylinder fuel injector terminal 1 and body GND
  - — No.1 cylinder fuel injector terminal 2 and power supply
  - — No.2 cylinder fuel injector terminal 2 and power supply
  - — No.3 cylinder fuel injector terminal 2 and power supply
  - — No.4 cylinder fuel injector terminal 2 and power supply
  - — No.5 cylinder fuel injector terminal 2 and power supply
  - — No.6 cylinder fuel injector terminal 2 and power supply

. uel Leakage Test

Warning

- **Fuel line spills and leakage are dangerous. Fuel can ignite and cause serious injuries or death and**

damage. Always carry out the following procedure with the engine stopped.

Note
- Perform the following test only when directed.

1. Complete the "BEFORE REPAIR PROCEDURE". (See 01–14A–6 BEFORE REPAIR PROCEDURE [L3, AJ].)
2. Disconnect the negative battery cable.
3. Remove the fuel injectors together with the fuel distributor connected to fuel hose. (See 01–14A–27 FUEL INJECTOR REMOVAL/INSTALLATION [AJ].)
4. Fasten the fuel injectors firmly to the fuel distributor with wire.
5. Connect the negative battery cable.

Caution
- **Connecting to the wrong check connector terminal may cause a malfunction. Carefully connect only to the specified terminal.**

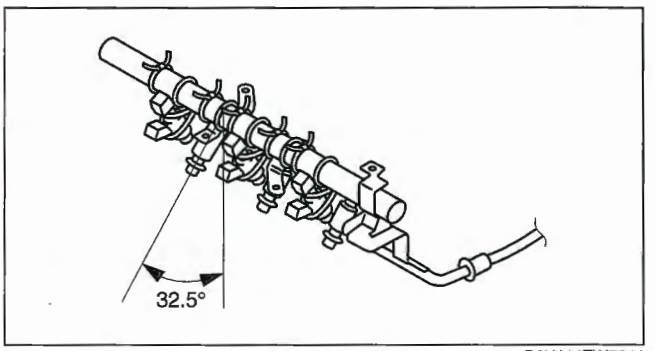

D6U114ZW7011

6. Short the check connector terminal F/P to body GND using a jumper wire.
7. Turn the ignition switch to the ON position to operate the fuel pump.

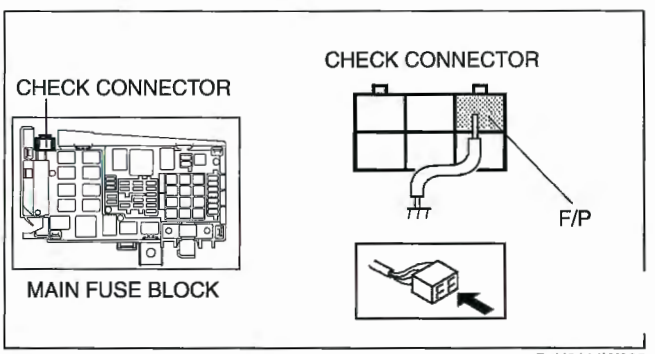

B6U0114W035

8. Tilt the fuel injectors **approx. 32.5°.**
9. Verify that fuel leakage from the fuel injector nozzles is within the specification.
   - If not as specified, replace the fuel injector.

Fuel injector leakage amount
Less than 1 drop/2 min

10. Turn the ignition switch to the LOCK position and remove the jumper wire.
11. Complete the "AFTER REPAIR PROCEDURE". (See 01–14A–6 AFTER REPAIR PROCEDURE [L3, AJ].)

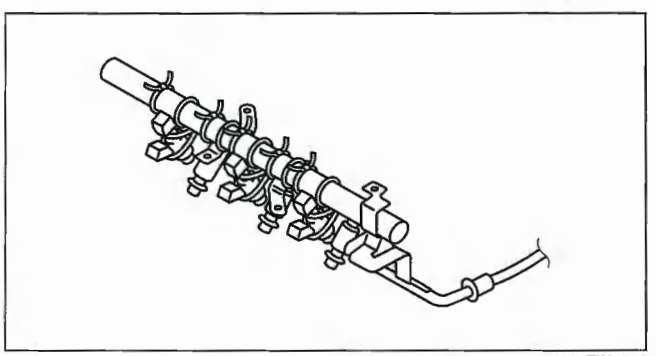
D6U114ZW7012

Volume Test

Warning
- **Fuel line spills and leakage are dangerous. Fuel can ignite and cause serious injuries or death and damage. Always carry out the following procedure with the engine stopped.**

Note
- If there is an after market fuel injector tester, perform the following procedure.
- If there is no an aftermarket fuel injector tester, perform "Operation Test", "Resistance Inspection", and "Fuel Leakage Test" to verify the fuel injector is okay or not.

1. Complete the "BEFORE REPAIR PROCEDURE". (See 01–14A–6 BEFORE REPAIR PROCEDURE [L3, AJ].)
2. Disconnect the negative battery cable.
3. Remove the fuel injectors. (See 01–14A–27 FUEL INJECTOR REMOVAL/INSTALLATION [AJ].)
4. Connect the fuel injector to the fuel injector tester.
5. Measure the injection volume of each fuel injector using a graduated container.
   - If not as specified, replace the fuel injector.

Fuel injection volume
44—58 ml {44—58 cc, 1.5—1.9 fl oz.}/15 s

6. Turn the ignition switch to the LOCK position and disconnect the jumper wire.
7. Complete the "AFTER REPAIR PROCEDURE". (See 01–14A–6 AFTER REPAIR PROCEDURE [L3, AJ].)

Atomization

1. Inspect atomization pattern.
   - If the atomization is faulty, replace the fuel injector.

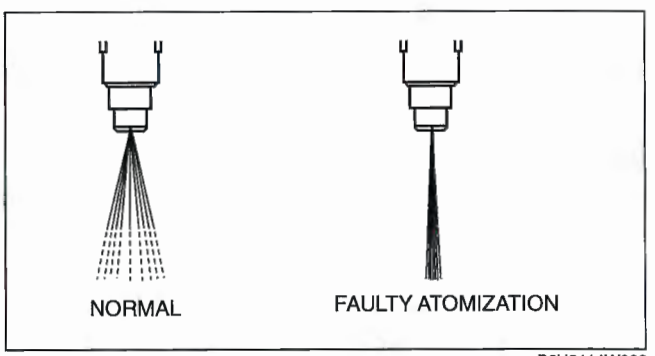

B6U0114W036

PRESSURE REGULATOR INSPECTION [L3, AJ]

E6U011413280W01

Note
- Due to the adoption of the mechanical returnless fuel system, the pressure regulator cannot be inspected separately.

1. Perform "FUEL LINE PRESSURE INSPECTION". (See 01–14A–7 FUEL LINE PRESSURE INSPECTION [L3, AJ].)

01–14B FUEL SYSTEM [L3 WITH TC]

FUEL SYSTEM LOCATION INDEX [L3 WITH TC] 01–14B–2
Engine Room Side 01–14B–2
Fuel Tank Side 01–14B–3
FUEL SYSTEM DIAGRAM [L3 WITH TC] 01–14B–4
BEFORE REPAIR PROCEDURE [L3 WITH TC] 01–14B–4
Fuel Line Safety Procedure 01–14B–4
AFTER REPAIR PROCEDURE [L3 WITH TC] 01–14B–5
Fuel Leakage Inspection 01–14B–5
FUEL LINE PRESSURE INSPECTION [L3 WITH TC] 01–14B–5
Low Pressure Line (From the Fuel Tank to the High Pressure Fuel Pump) 01–14B–5
High Pressure Line (From the High Pressure Fuel Pump to the Fuel Injector) 01–14B–6
FUEL TANK REMOVAL/INSTALLATION [L3 WITH TC] 01–14B–7
FUEL SHUT-OFF/ROLLOVER VALVE INSPECTION [L3 WITH TC] 01–14B–9
FUEL PUMP UNIT REMOVAL/INSTALLATION [L3 WITH TC] 01–14B–9
Plastic Fuel Hose Removal Note 01–14B–11
Fuel Pump Cap Removal Note 01–14B–11
Fuel Pump Cap Installation Note 01–14B–12
FUEL PUMP UNIT DISASSEMBLY/ASSEMBLY [L3 WITH TC] 01–14B–15
FUEL PUMP UNIT INSPECTION [L3 WITH TC] 01–14B–16
Continuity Inspection 01–14B–16
Circuit Open/Short Inspection 01–14B–16
Fuel Pump Hold Pressure Inspection 01–14B–16
FUEL PUMP RESISTOR REMOVAL/INSTALLATION [L3 WITH TC] 01–14B–17
FUEL PUMP RESISTOR INSPECTION [L3 WITH TC] 01–14B–18
Resistance Inspection 01–14B–18
HIGH PRESSURE FUEL PUMP REMOVAL/INSTALLATION [L3 WITH TC] 01–14B–18
Fuel Leakage Inspection After High Pressure Fuel Pump Installation 01–14B–20
HIGH PRESSURE FUEL PUMP INSPECTION [L3 WITH TC] 01–14B–20
QUICK RELEASE CONNECTOR REMOVAL/INSTALLATION [L3 WITH TC] 01–14B–21
Quick Release Connector Type 01–14B–21
Type A Removal 01–14B–21
Type B Removal 01–14B–22
Type C Removal 01–14B–23
Type A Installation 01–14B–23
Type B Installation 01–14B–24
Type C Installation 01–14B–24
FUEL INJECTOR REMOVAL/INSTALLATION [L3 WITH TC] 01–14B–25
High Pressure Line Pipe Removal Note 01–14B–26
Fuel Injector Removal Note 01–14B–26
Fuel Delivery Pipe Installation Note 01–14B–27
High Pressure Line Pipe Installation Note 01–14B–28
FUEL INJECTOR INSPECTION [L3 WITH TC] 01–14B–29
Operation Test 01–14B–29
Resistance Inspection 01–14B–29
Circuit Open/Short Inspection 01–14B–29
PRESSURE REGULATOR INSPECTION [L3 WITH TC] 01–14B–30

FUEL SYSTEM LOCATION INDEX [L3 WITH TC]

E6U011400000W06

Engine Room Side

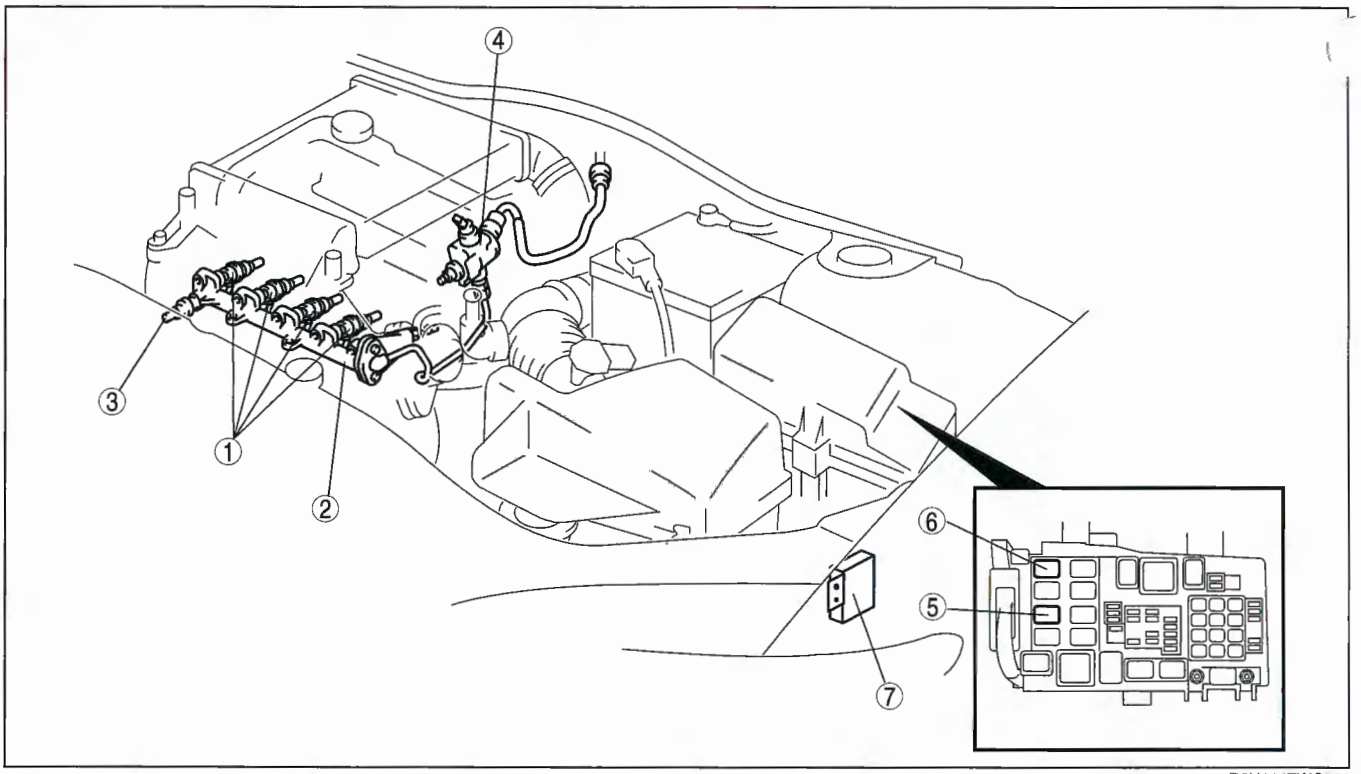

D6U114ZWC001

1	Fuel injector (See 01–14B–25 FUEL INJECTOR REMOVAL/ INSTALLATION [L3 WITH TC].) (See 01–14B–29 FUEL INJECTOR INSPECTION [L3 WITH TC].)
2	Fuel delivery pipe (See 01–14B–25 FUEL INJECTOR REMOVAL/ INSTALLATION [L3 WITH TC].)
3	Fuel pressure sensor (See01–14B–25 FUEL INJECTOR REMOVAL/ INSTALLATION [L3 WITH TC].) (See01–40B–34 FUEL PRESSURE SENSOR INSPECTION [L3 WITH TC].)

4	High pressure fuel pump (See01–14B–18 HIGH PRESSURE FUEL PUMP REMOVAL/INSTALLATION [L3 WITH TC].) (See01–14B–20 HIGH PRESSURE FUEL PUMP INSPECTION [L3 WITH TC].)
5	Fuel pump relay
6	Fuel pump speed control relay
7	Fuel pump resistor (See01–14B–17 FUEL PUMP RESISTOR REMOVAL/INSTALLATION [L3 WITH TC].) (See01–14B–18 FUEL PUMP RESISTOR INSPECTION [L3 WITH TC].)

Fuel Tank Side

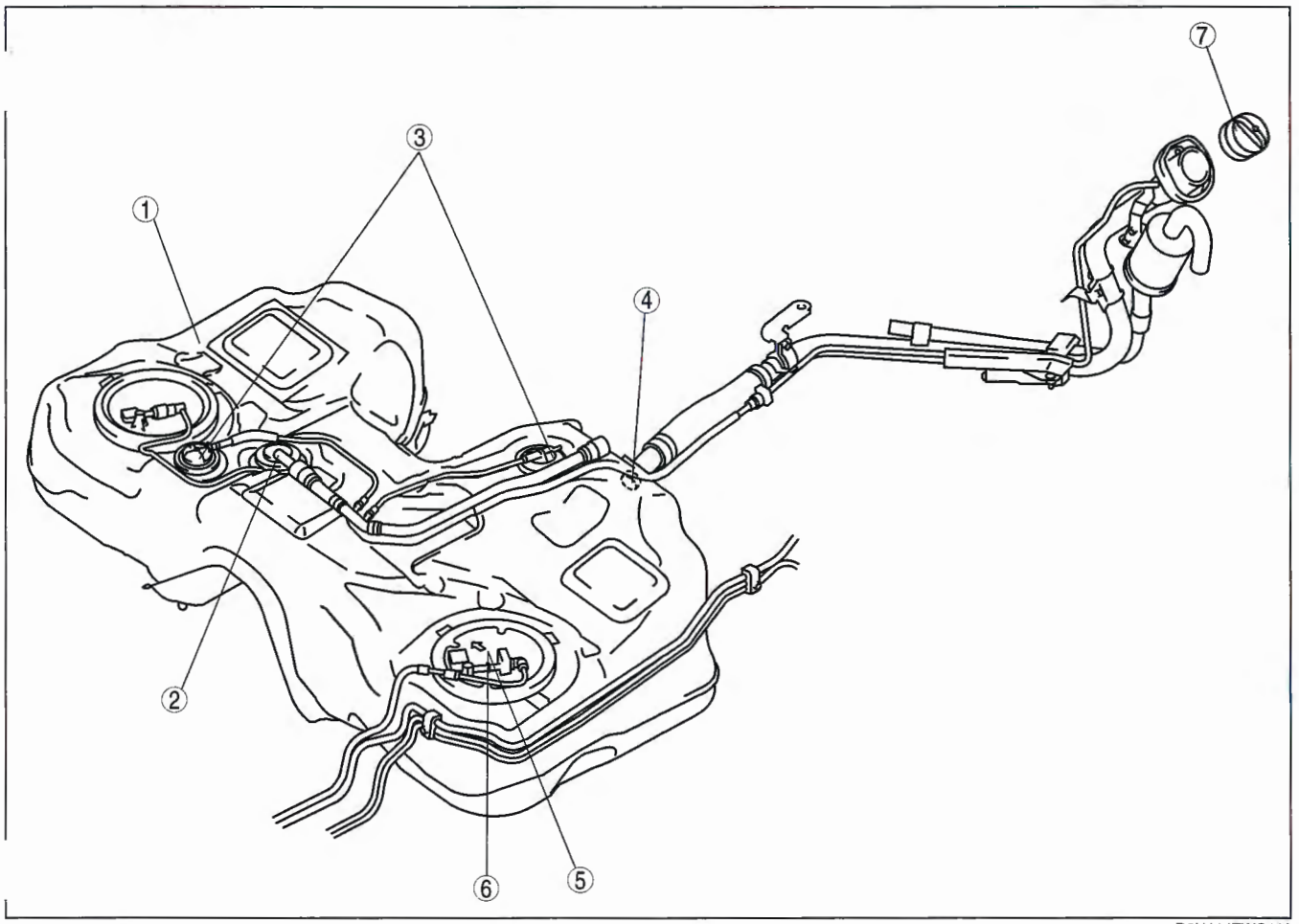

D6U114ZWC002

1	Fuel tank (See 01–14B–7 FUEL TANK REMOVAL/ INSTALLATION [L3 WITH TC].)
2	Shut-off valve (See 01–14B–9 FUEL SHUT-OFF/ROLLOVER VALVE INSPECTION [L3 WITH TC].)
3	Rollover valve (See 01–14B–9 FUEL SHUT-OFF/ROLLOVER VALVE INSPECTION [L3 WITH TC].)
4	Nonreturn valve
5	Fuel pump unit (See 01–14B–9 FUEL PUMP UNIT REMOVAL/ INSTALLATION [L3 WITH TC].) (See 01–14B–15 FUEL PUMP UNIT DISASSEMBLY/ASSEMBLY [L3 WITH TC].) (See 01–14B–16 FUEL PUMP UNIT INSPECTION [L3 WITH TC].)
6	Pressure regulator (See 01–14B–30 PRESSURE REGULATOR INSPECTION [L3 WITH TC].)
7	Filler cap

FUEL SYSTEM DIAGRAM [L3 WITH TC]

E6U011400000W07

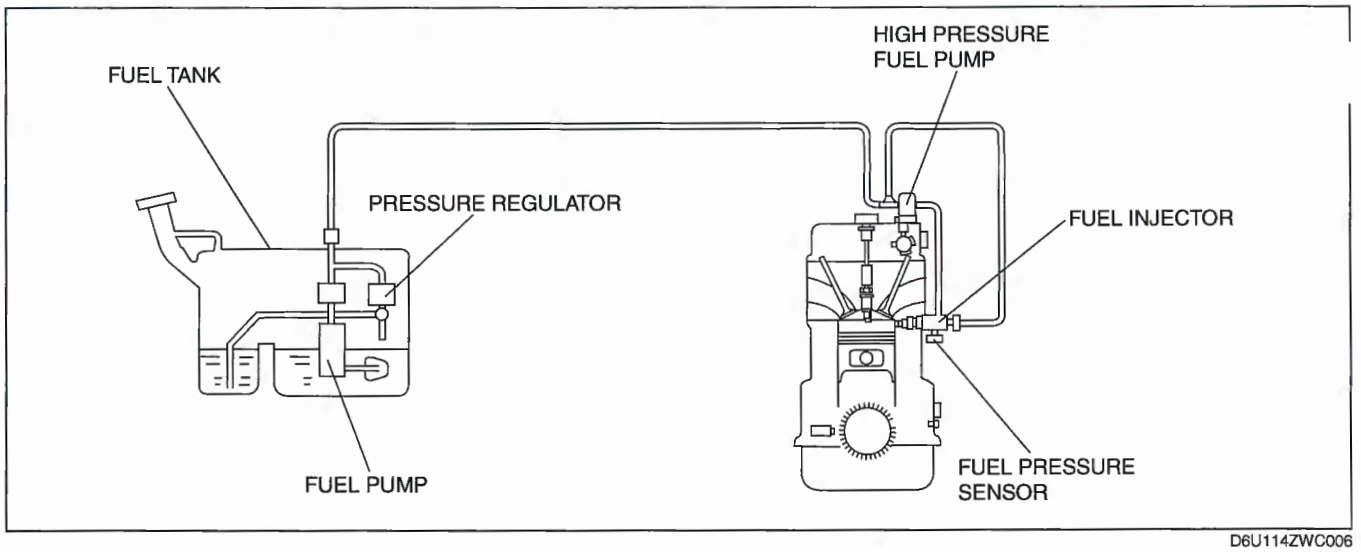

D6U114ZWC006

BEFORE REPAIR PROCEDURE [L3 WITH TC]

E6U011400000W08

Warning

- **Fuel vapor is hazardous. It can easily ignite, causing serious injury and damage. Always keep sparks and flames away from fuel.**
- **Fuel line spills and leakage are dangerous. Fuel can ignite and cause serious injuries or death and damage. Fuel can also irritate skin and eyes. To prevent this, always complete the following "Fuel Line Safety Procedure".**
- **A person charged with static electricity could cause a fire or explosion, resulting in death or serious injury. Before performing work on the fuel system, discharge static electricity by touchin the vehicle body.**

Fuel Line Safety Procedure

Note

- Fuel in the fuel system is under high pressure even when the engine is not running.

1. Remove the fuel-filler cap and release the pressure in the fuel tank.
2. Remove the fuel pump relay.
3. Start the engine.
4. After the engine stalls, crank the engine several times.
5. Turn the ignition switch to the LOCK position.
6. Install the fuel pump relay.

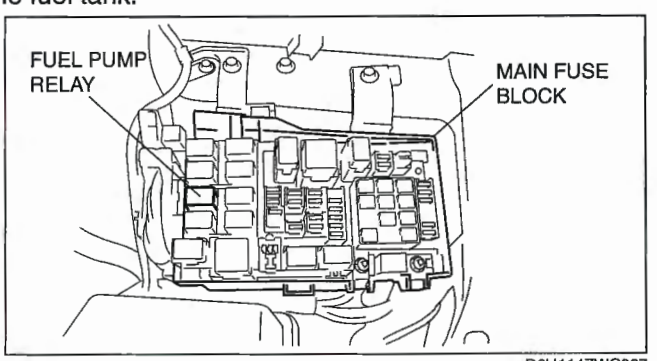

D6U114ZWC007

AFTER REPAIR PROCEDURE [L3 WITH TC]

E6U011400000W09

Warning

- **Fuel line spills and leakage are dangerous. Fuel can ignite and cause serious injuries or death and damage. When installing the fuel hose, perform "Fuel Leakage Inspection" described below.**

Fuel Leakage Inspection

Warning

- **Fuel line spills and leakage are dangerous. Fuel can ignite and cause serious injuries or death and damage. Always carry out the following procedure with the engine stopped.**

Caution

- **Connecting to the wrong check connector terminal may cause a malfunction. Carefully connect only to the specified terminal.**

1. Short the check connector terminal F/P to body ground using a jumper wire.
2. Turn the ignition switch to the ON position to operate the fuel pump.
3. Pressurize the system in this manner for **at least 5 min** to be sure there is no leakage.
   - If there is fuel leakage, inspect the fuel hoses, hose clamps, and fuel pipe sealing surface, and replace if necessary.
4. After repair, assemble the system and repeat Steps 1 to 3.

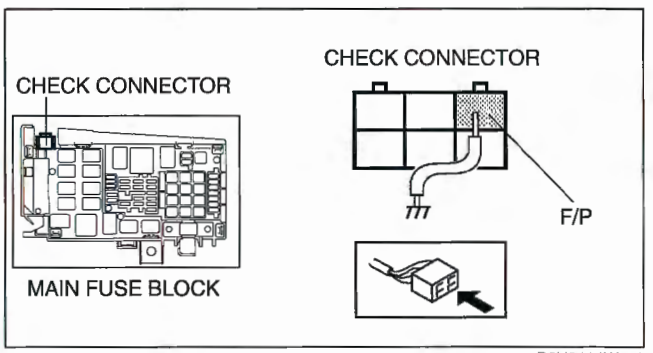

B6U0114W003

FUEL LINE PRESSURE INSPECTION [L3 WITH TC]

E6U011400000W10

Low Pressure Line (From the Fuel Tank to the High Pressure Fuel Pump)

Warning

- **Fuel line spills and leakage are dangerous. Fuel can ignite and cause serious injuries or death. Fuel can also irritate skin and eyes. To prevent this, always complete the "BEFORE REPAIR PROCEDURE". (See 01–14B–4 BEFORE REPAIR PROCEDURE [L3 WITH TC].)**

Caution

- **Disconnecting/connecting the quick release connector without cleaning it may possibly cause damage to the fuel pipe and quick release connector. Always clean the quick release connector joint area before disconnecting/connecting using cloth or soft brush, and make sure that it is free of foreign material.**

1. Complete the "BEFORE REPAIR PROCEDURE".
   (See 01–14B–4 BEFORE REPAIR PROCEDURE [L3 WITH TC])
2. Disconnect the vacuum hose from the intake manifold that connecting to the brake booster.
3. Disconnect the negative battery cable.

Caution

- **The quick release connector may be damaged if the tab is turned too far. Do not turn the tab over the stopper.**

4. Disconnect the quick release connector from the fuel tank. (See 01–14B–21 QUICK RELEASE CONNECTOR REMOVAL/INSTALLATION [L3 WITH TC].)
5. Push the **SST** quick release connector into the fuel pipe and plastic fuel hose into the **SST** until a click is heard.

6. Turn the lever parallel to the hose of the **SST** as shown.

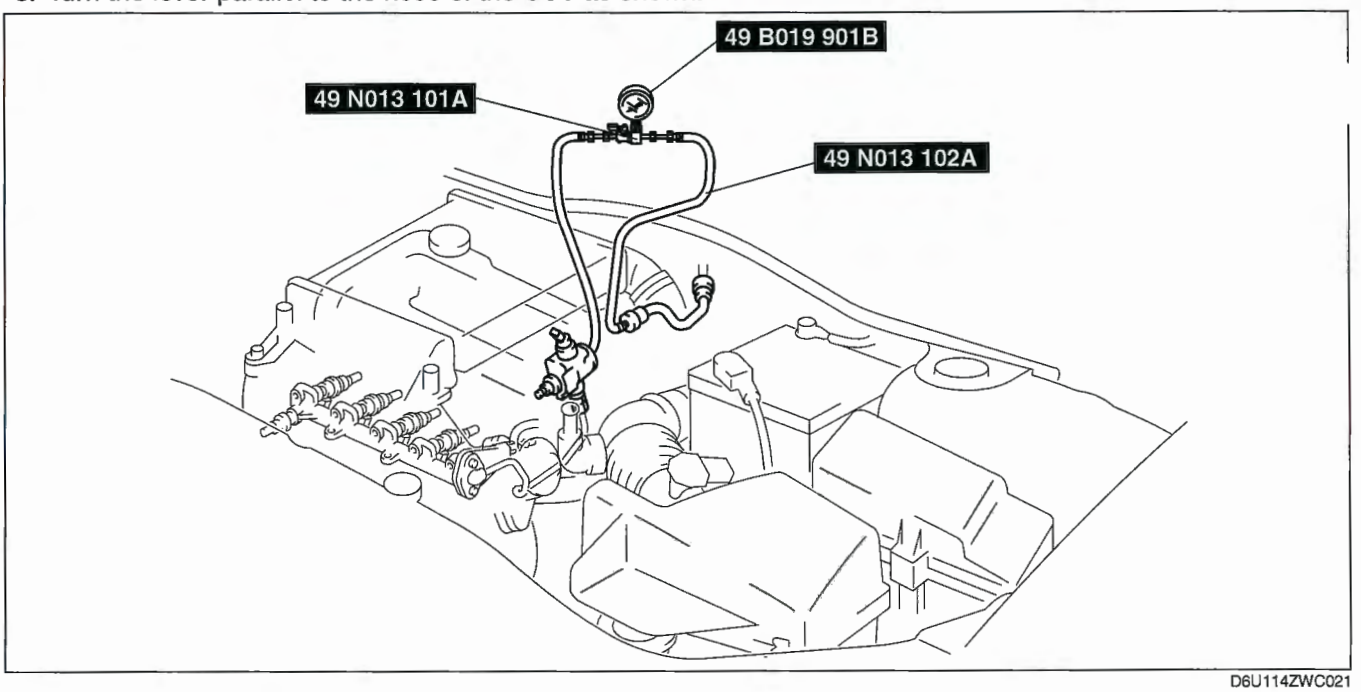

D6U114ZWC021

7. Connect the vacuum hose to the intake manifold that connecting to the brake booster.
8. Connect the negative battery cable.
9. Verify the vehicle's MTX is in neutral position.
10. Start the engine and let it idle. Measure the fuel line pressure.
    - If not as specified, inspect the following:

    Zero or low
    — FP circuit
    — FP
    — Fuel line (clogged)
    — Fuel leakage inside pressure regulator

    High
    — Pressure regulator for high pressure cause

Fuel line pressure
410—490 kPa {4.2—4.9 kgf/cm^2, 60—71 psi}

11. Turn the ignition switch to the LOCK position.
12. Measure the fuel hold pressure **after 5 min**.
    - If not as specified, inspect the following:
      — FP hold pressure
      — Fuel injector for leakage
      — Fuel line for improper routing, kinks or leakage

Fuel hold pressure
More than 230 kPa {2.3 kgf/cm^2, 33 psi}

13. Complete the "BEFORE REPAIR PROCEDURE".
    (See 01–14B–4 BEFORE REPAIR PROCEDURE [L3 WITH TC])
14. Disconnect the vacuum hose from the intake manifold that connecting to the brake booster.
15. Disconnect the **SST**.
16. Connect the quick release connector. (See 01–14B–21 QUICK RELEASE CONNECTOR REMOVAL/INSTALLATION [L3 WITH TC].)

High Pressure Line (From the High Pressure Fuel Pump to the Fuel Injector)

1. Inspect the fuel pressure sensor. (See 01–40B–34 FUEL PRESSURE SENSOR REMOVAL/INSTALLATION [L3 WITH TC].)
2. Inspect the high pressure fuel pump. (See 01–14B–18 HIGH PRESSURE FUEL PUMP REMOVAL/INSTALLATION [L3 WITH TC].)

FUEL TANK REMOVAL/INSTALLATION [L3 WITH TC]

E6U011442110W02

Warning

- **Repairing a fuel tank that has not been properly steam-cleaned can be dangerous. Explosion or fire may cause death or serious injury. Always properly steam clean a fuel tank before repairing it.**
- **Fuel line spills and leakage are dangerous. Fuel can ignite and cause serious injuries or death and damage. Fuel can also irritate skin and eyes. To prevent this, do not damage the sealing surface of the fuel pump unit when removing or installing.**
- **A person charged with static electricity could cause a fire or explosion, resulting in death or serious injury. Before draining fuel, make sure to discharge static electricity by touching the vehicle body.**

Caution

- **Disconnecting/connecting the quick release connector without cleaning it may cause damage to the fuel pipe and quick release connector. Always clean the quick release connector joint area before disconnecting/connecting using a cloth or soft brush, and make sure that it is free of foreign material.**

1. Level the vehicle.
2. Complete the "BEFORE REPAIR PROCEDURE". (See 01–14B–4 BEFORE REPAIR PROCEDURE [L3 WITH TC].)
3. Remove the propeller shaft. (See 03–15–4 PROPELLER SHAFT REMOVAL/INSTALLATION.)
4. Remove the middle pipe. (See 01–15B–2 EXHAUST SYSTEM REMOVAL/INSTALLATION [L3 WITH TC].)
5. Disconnect the negative battery cable.
6. Remove the fuel pump unit. (See01–14B–9 FUEL PUMP UNIT REMOVAL/INSTALLATION [L3 WITH TC].)
7. Siphon the fuel from the fuel tank.
8. Remove in the order indicated in the table.
9. Install in the reverse order of removal.
10. Complete the "AFTER REPAIR PROCEDURE". (See 01–14B–5 AFTER REPAIR PROCEDURE [L3 WITH TC].)

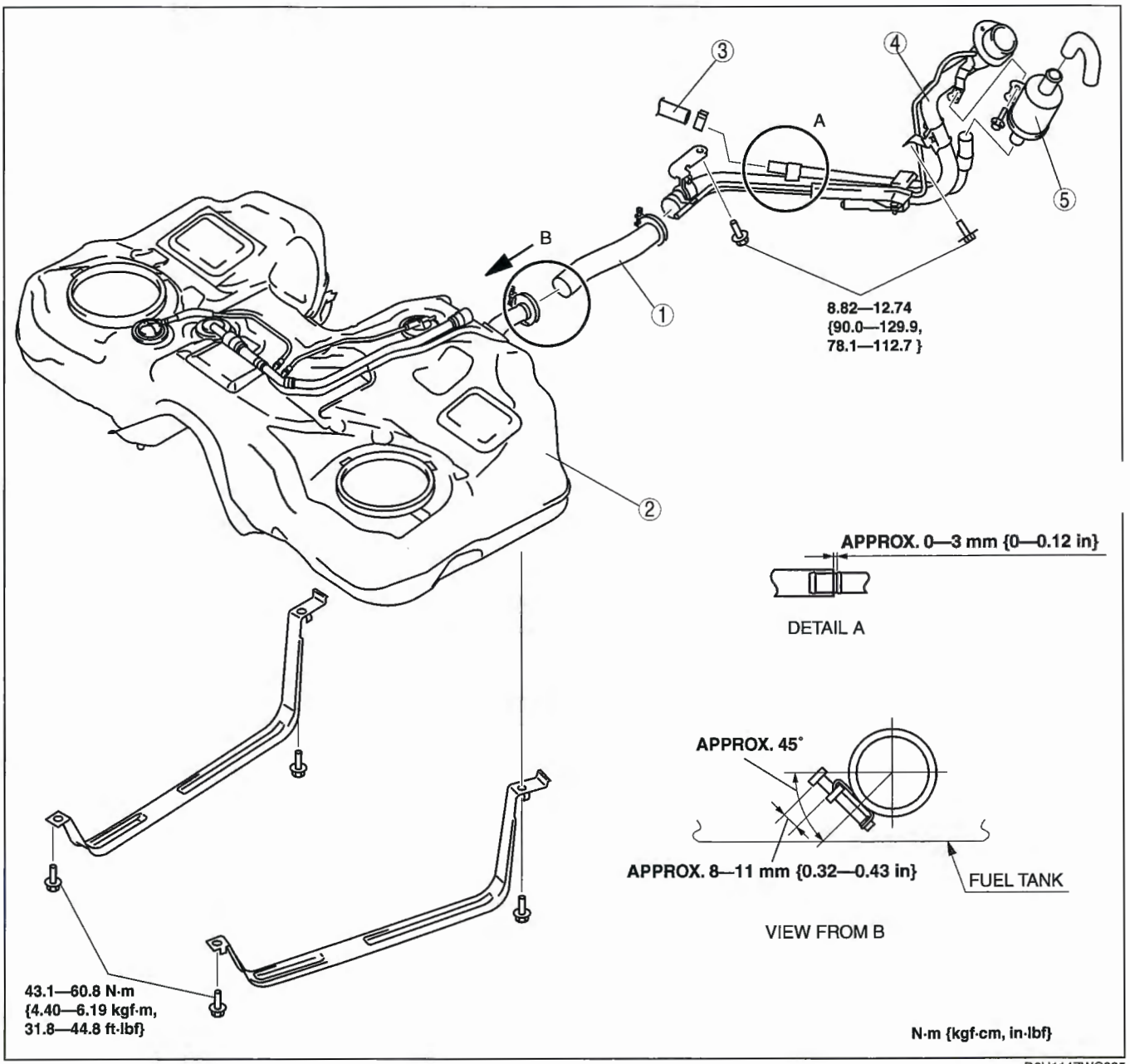

D6U114ZWC025

1	Joint hose
2	Fuel tank
3	Evaporative hose

4	Fuel-filler pipe
5	Air filter

FUEL SHUT-OFF/ROLLOVER VALVE INSPECTION [L3 WITH TC]

E6U011442990W02

Caution

- **Disconnecting/connecting the quick release connector without cleaning it may cause damage to the fuel pipe and quick release connector. Always clean the quick release connector joint area before disconnecting/connecting using a cloth or soft brush, and make sure that it is free of foreign material.**

Note

- This inspection is for fuel shut-off valve and two rollover valves integrated in the fuel tank.

1. Disconnect the plastic fuel hose and the fuel pump unit connector. (See 01–14B–9 FUEL PUMP UNIT REMOVAL/INSTALLATION [L3 WITH TC].)
2. Remove the fuel tank with the fuel pump unit. (See 01–14B–7 FUEL TANK REMOVAL/INSTALLATION [L3 WITH TC].)
3. Plug the port as shown in the figure.
4. Level the fuel tank.

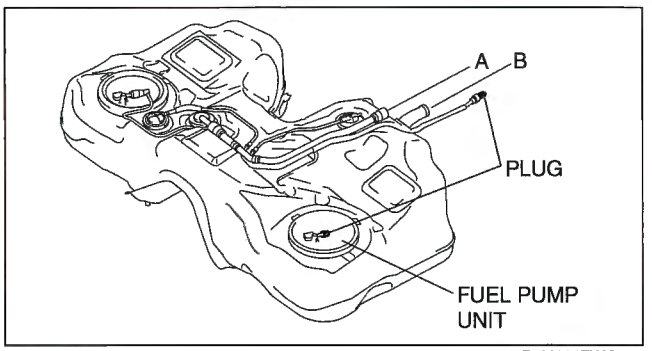

D6U114ZWC026

5. Blow through port B and verify that there is airflow from port A.
   - If there is no airflow, replace the fuel tank.
   - If there is airflow, turn the fuel tank upside down, and proceed to Step 6.
6. Blow through port B and verify that there is no airflow from port A.
   - If there is airflow, replace the fuel tank.

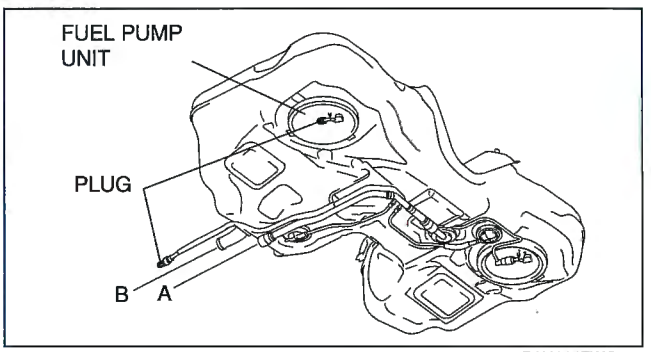

D6U114ZWC027

FUEL PUMP UNIT REMOVAL/INSTALLATION [L3 WITH TC]

E6U011413350W04

Warning

- **Fuel line spills and leakage are dangerous. Fuel can ignite and cause serious injuries or death and damage. Fuel can also irritate skin and eyes. To prevent this, always complete the "Fuel Line Safety Procedure".**
- **Fuel line spills and leakage are dangerous. Fuel can ignite and cause serious injuries or death and damage. Fuel can also irritate skin and eyes. To prevent this, before performing the fuel pump unit removal/installation, always complete the "Fuel Leak Inspection After Fuel Pump Unit Installation".**
- **A person charged with static electricity could cause a fire or explosion, resulting in death or serious injury. Before draining fuel, make sure to discharge static electricity by touching the vehicle body.**

Caution

- **Because the fuel tank is constructed such that the fuel level is higher than the installation surface of the fuel pump, fuel leakage could occur. If the fuel gauge indicates a fuel level of half or more, perform the following Steps 1-6 to drain the fuel.**
- **Disconnecting/connecting the quick release connector without cleaning it may possibly cause damage to the fuel pipe and quick release connector. Always clean the quick release connector joint area before disconnecting/connecting using a cloth or soft brush, and make sure that it is free of foreign material.**
- **To prevent the SST from coming off the fuel pump cap while performing the work, always perform the removal/installation procedure with 2 people. One person presses the SST against cap from directly above, while the other person rotates the SST.**

1. Complete the "BEFORE REPAIR PROCEDURE". (See 01–14B–4 BEFORE REPAIR PROCEDURE [L3 WITH TC].)
2. Remove the plug hole plate.
3. Disconnect the quick release connector connected to the high pressure fuel pump.
4. Connect a long hose to the disconnected quick release connector and drain the fuel into a container used for collecting gasoline.

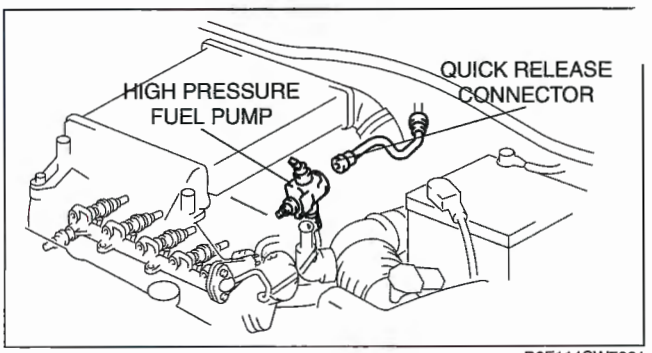

D6E114CW7001

5. Start the fuel pump using the following procedure.
   Using WDS or equivalent
   1. Connect the WDS or equivalent to the DLC-2.
   2. Using the simulation function "FP", start the fuel pump.

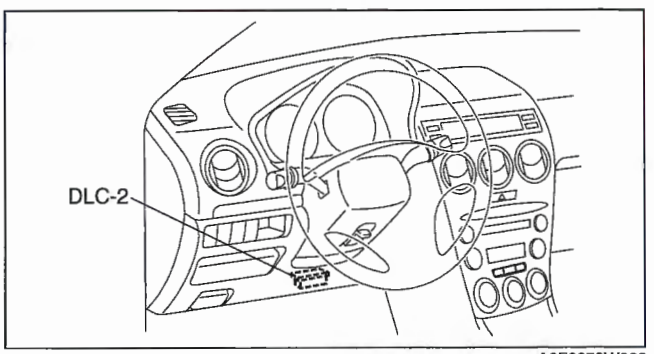

A6E3970W002

   Without using WDS or equivalent
   1. Short the check connector terminal F/P to body GND using a jumper wire.
   2. Turn the ignition switch to ON position to operate the fuel pump.

   Caution
   - **The fuel pump could be damaged if it is operated (fuel pump idling) while there is no fuel in the fuel tank. Verify the amount of fuel being discharged from the hose and stop operation of the fuel pump when essentially no fuel is being discharged.**

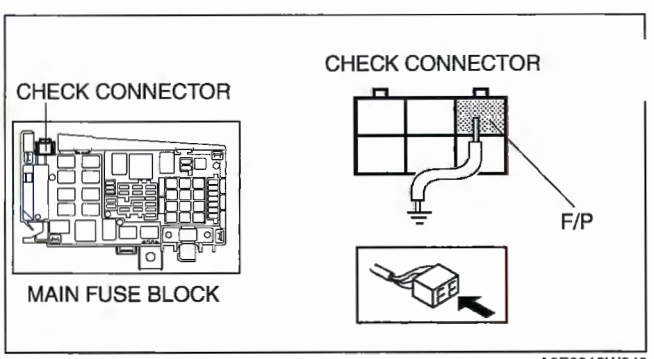

A6E3912W049

   Note
   - If the fuel tank is full, drain **approx. 40 L {10.6 US gal, 8.8 Imp gal}** of fuel until the fuel gauge indicates **approx. 3/8** of a tank.

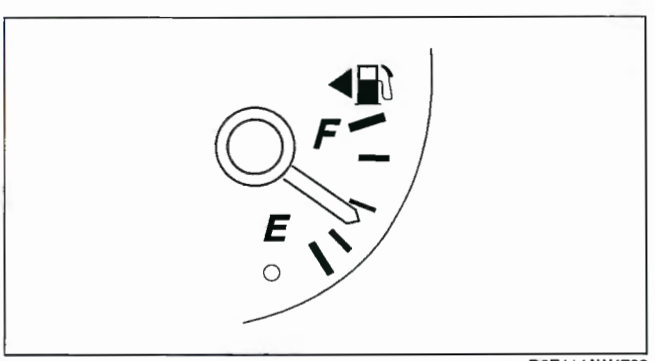

D6E114AW4702

6. When essentially no fuel is being discharged, stop the fuel pump.
   Using WDS or equivalent
   1. Using the simulation function "FP", stop the fuel pump.
   Without using WDS or equivalent
   1. Turn the ignition switch to LOCK position to stop the fuel pump.
   2. Disconnect the jumper wire from the check connector.
7. Disconnect the negative battery cable.
8. Complete the following in order to the work area.
   (1) Loosen the bolt of the fuel tank strap.
   (2) Lower the fuel tank to a position where the **SST** can be attached from the service hole cover.
9. Remove the rear seat cushion.

10. Remove in the order indicated in the table.

1	Service hole cover
2	Connector
3	Plastic fuel hose (See 01–14B–21 QUICK RELEASE CONNECTOR REMOVAL/INSTALLATION [L3 WITH TC])
4	Fuel pump cap (See 01–14B–11 Fuel Pump Cap Removal Note) (See 01–14B–12 Fuel Pump Cap Installation Note)
5	Fuel pump unit
6	Packing
7	Retainer (See 01–14B–12 Fuel Pump Cap Installation Note)

11. Install in the reverse order of removal.
12. Complete the "AFTER REPAIR PROCEDURE". (See 01–14B–5 AFTER REPAIR PROCEDURE [L3 WITH TC].)

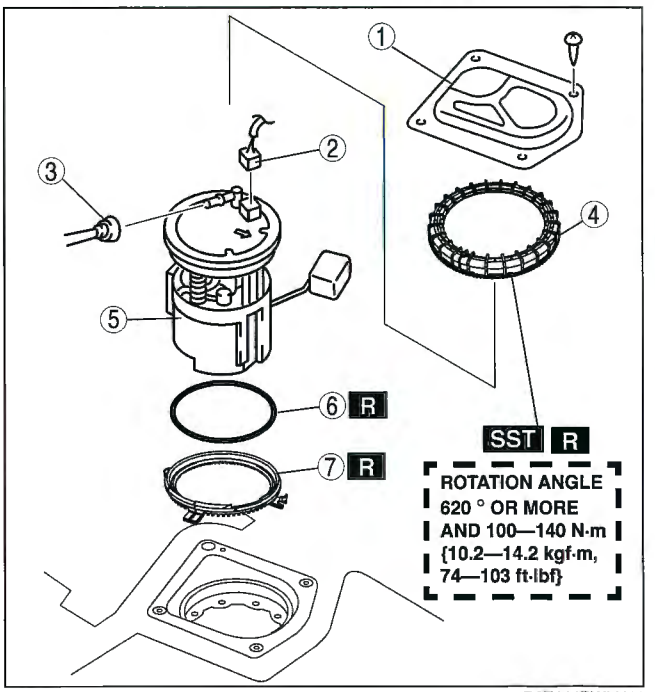

D6E114BWLH01

Plastic Fuel Hose Removal Note

Caution
- **The quick release connector may be damaged if the tab is bent excessively. Do not expand the tab over the stopper.**

1. Disconnect the quick release connector. (See 01–14B–21 QUICK RELEASE CONNECTOR REMOVAL/INSTALLATION [L3 WITH TC].)
2. Cover the disconnected quick release connector and fuel pipe with vinyl sheets or the like to prevent them from being scratched or contaminated with foreign material.

Fuel Pump Cap Removal Note

Note
- Do not remove the fuel tank strap.

1. Loosen the fuel tank strap installation bolts and lower the fuel tank so that the **SST** can be set.

Caution
- **The cap could be damaged if the SST is used with any play between the cap and the SST. Securely attach the SST so that there is no gap between the SST tabs and the side of the cap.**

2. Remove the fuel pump cap using the **SST** with two of the four brackets removed.

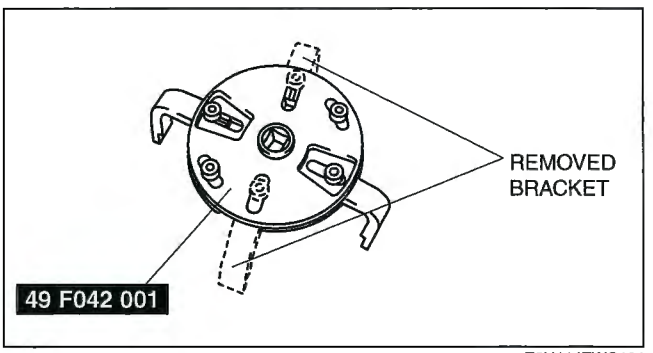

E6U114ZWC101

Fuel Pump Cap Installation Note

Warning
- **Make sure there is no foreign material on each of the parts. If there is foreign material on the parts the fuel pump unit cannot be assembled correctly, which could result in fuel leakage.**

Note
- The fuel pump unit will rotate and cannot be secured in the specified position if there is any gasoline on the gasket. Thoroughly wipe away all gasoline from the gasket.

1. Replace the packing, fuel pump cap and the retainer with new parts.

Caution
- **New parts can deform depending on the temperature. If the parts deform, the fuel pump unit cannot be assembled correctly, which could result in fuel leakage. Therefore, keep new parts at room temperature for the specified period of time to stabilize the shape.**

2. Leave new parts inside for the following period of time:

Stand-by time
12 h or more

3. Install a new retainer to the fuel tank.
   (1) Align the retainer tabs (3 locations) with the fuel tank grooves.
   (2) Verify that the tabs are inserted into the grooves and the retainer is installed correctly.
   (3) Verify the retainer is not damaged.
4. Install a new packing to the fuel tank.
   (1) Verify the packing groove is clean and free of foreign material.
   (2) Install the packing to the fuel tank so that it is inserted into the fuel tank grooves.

Caution
- **Install the fuel pump unit to the fuel tank being careful not to bend the fuel sender unit arm. If the arm is bent, the fuel sender unit will not operate correctly.**

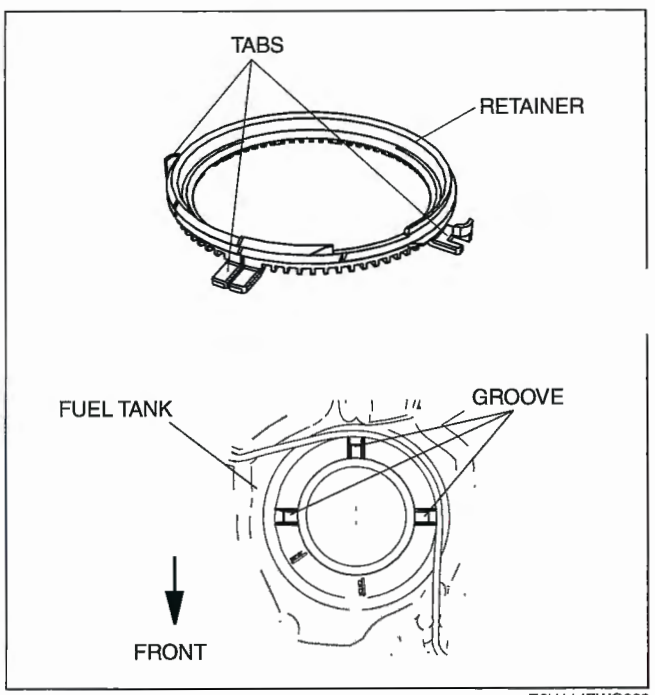

E6U114ZWC003

5. Install the fuel pump unit to the fuel tank.
   (1) Align the fuel tank and fuel pump unit alignment marks as shown in the figure.

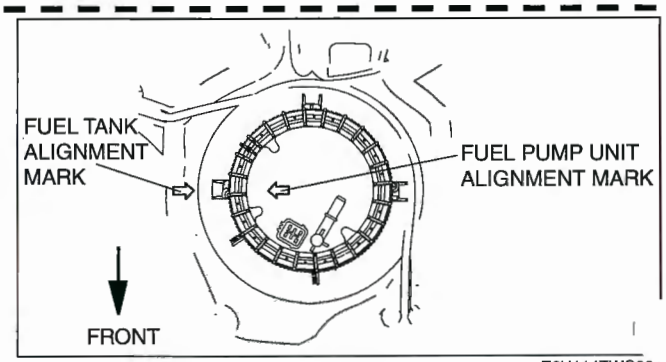

E6U114ZWC004

(2) Verify the tab on the fuel pump unit flange with the notch on the retainer.

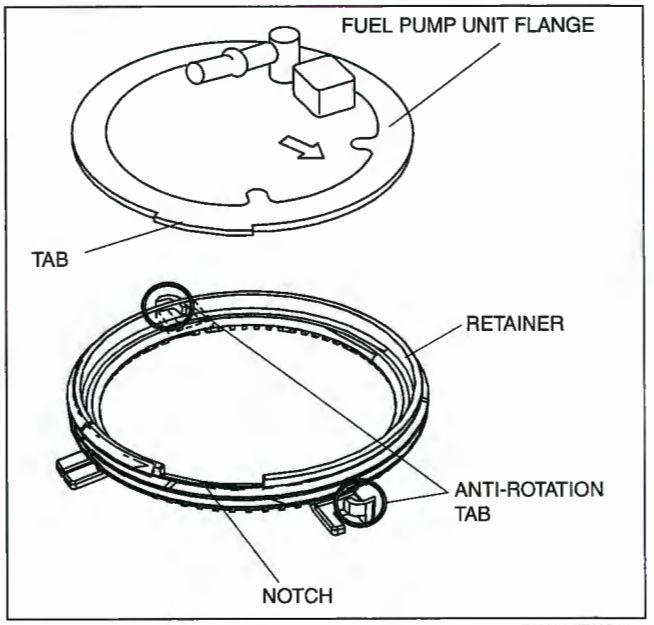

E6U114ZWC005

6. Set on a new fuel pump cap.
(1) Apply downward force (push down) on the center of the fuel pump unit flange.

Note
- Align the fuel pump cap with the tightening start position of the retainer and tighten the fuel pump cap with the start position as **0** °.
- The fuel pump cap tightening start position is the position where the spaces between the ribs become narrow. The retainer tightening start position is the notch position.

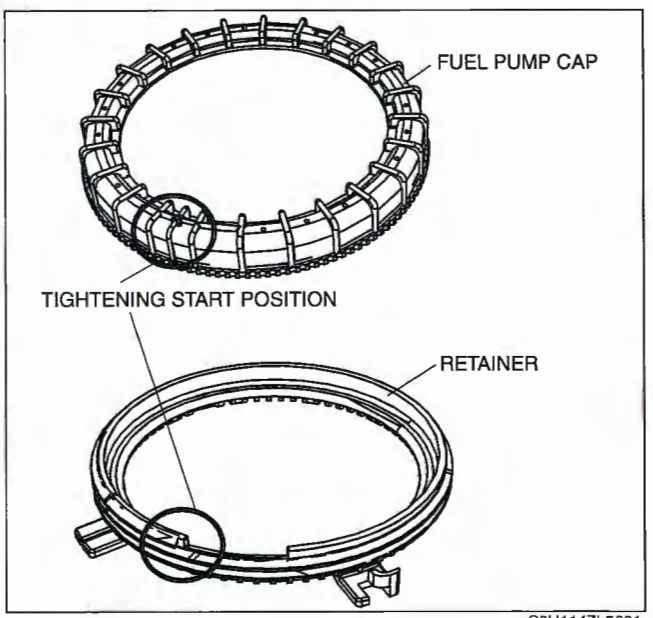

C3U114ZL5001

(2) Align the tightening start position on the fuel pump cap and the tightening start point of the retainer.

Warning
- **No grease or lubrication allowed on parts during installation. Parts could slide or they cannot be tightened to the specified torque. As a result, fuel leakage could occur.**
- **When tightening the fuel pump cap, be careful that the fuel tank and fuel pump unit alignment marks have not deviated. If there is deviation, the fuel pump unit cannot be installed correctly, which could result in fuel leakage.**

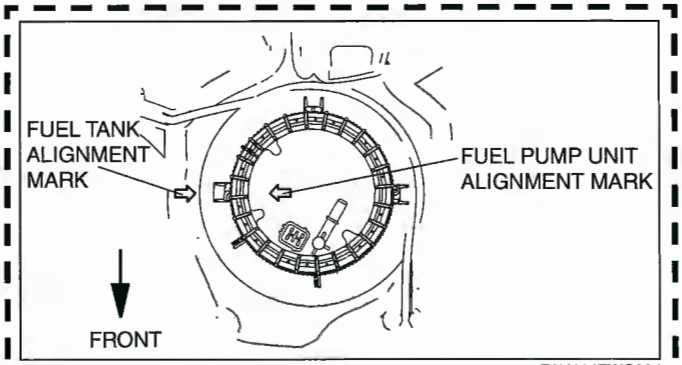

E6U114ZWC004

7. Tighten the fuel pump cap.
   (1) Tighten the fuel pump cap by hand to the specified angle or more until the flange is fixed.

Fuel pump cap rotation angle
270 ° or more

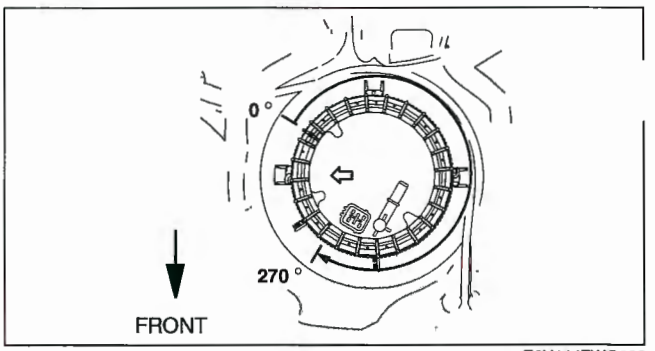

E6U114ZWC006

   (2) Verify that the fuel pump cap is tightened correctly.
      1) The gap between the bottom of the fuel pump cap and the tank surface is even all around.
         - If the fuel pump cap is not tightened uniformly, loosen it by hand and re-install it.

Caution
- **The cap could be damaged if the SST is used with any play between the cap and the SST. Securely attach the SST so that there is no gap between the SST tabs and the side of the cap.**

   (3) Install the **SST** with two of the four brackets removed.

Note
- The fuel pump cap rotation angle is the angle from the **0** ° position. The angle tightened to using the **SST** includes the angle tightened by hand.

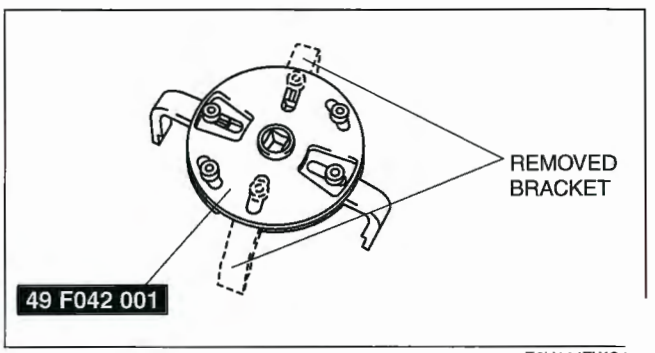

E6U114ZWC10

   (4) Tighten the fuel pump cap to the specified torque and to the specified angle or more.
      - If the specified tightening torque and rotation angle cannot be obtained, replace the fuel tank.

Fuel pump cap rotation angle
620 ° or more
Fuel pump cap tightening torque
100—140 N·m {10.2—14.2 kgf·m, 74—103 ft·lbf}

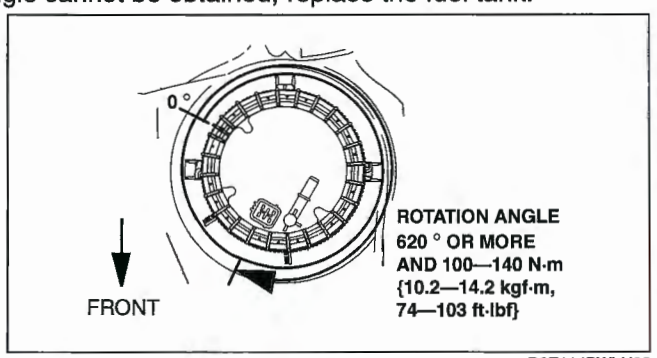

D6E114BWLH02

   (5) Verify that the fuel pump cap is tightened correctly.
      1) The gap between the top of the fuel pump unit flange and the fuel pump cap is even all around.
         - If it is not tightened uniformly, re-install it using the following procedure.
      2) The gap between the fuel pump unit and fuel tank is even all around.
         - If it is not tightened uniformly, re-install it using the following procedure.
      3) Verify that the fuel tank and fuel pump unit alignment marks are aligned.
         - If they are not aligned, re-install it using the following procedure.

Caution
- **The cap could be damaged if the SST is used with any play between the cap and the SST. Securely attach the SST so that there is no gap between the SST tabs and the side of the cap.**

8. Install the **SST** with two of the four brackets removed.
9. Remove the fuel pump cap, fuel pump unit, packing, and retainer.
10. Verify that the retainer is not damaged.
    - If both of the retainer anti-rotation tabs are broken, replace it with new one.
11. Return to Step 2 and re-install.
12. Tighten the fuel tank strap bolts.

Tightening torque
43.1—60.8 N·m {4.40—6.19 kgf·m, 31.8—44.8 ft·lbf}

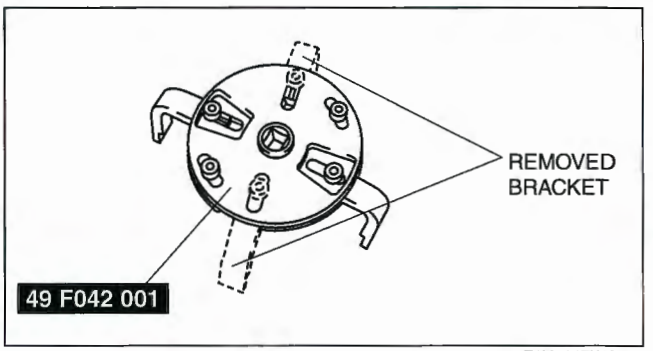

E6U114ZWC101

FUEL PUMP UNIT DISASSEMBLY/ASSEMBLY [L3 WITH TC]

E6U011413350W05

Warning
- **Fuel line spills and leakage are dangerous. Fuel can ignite and cause serious injuries or death and damage. Fuel can also irritate skin and eyes. To prevent this, do not damage the sealing surface of the fuel pump unit when removing or installing.**

1. Disassemble in the order indicated in the table.
2. Assemble in the reverse order of disassembly.

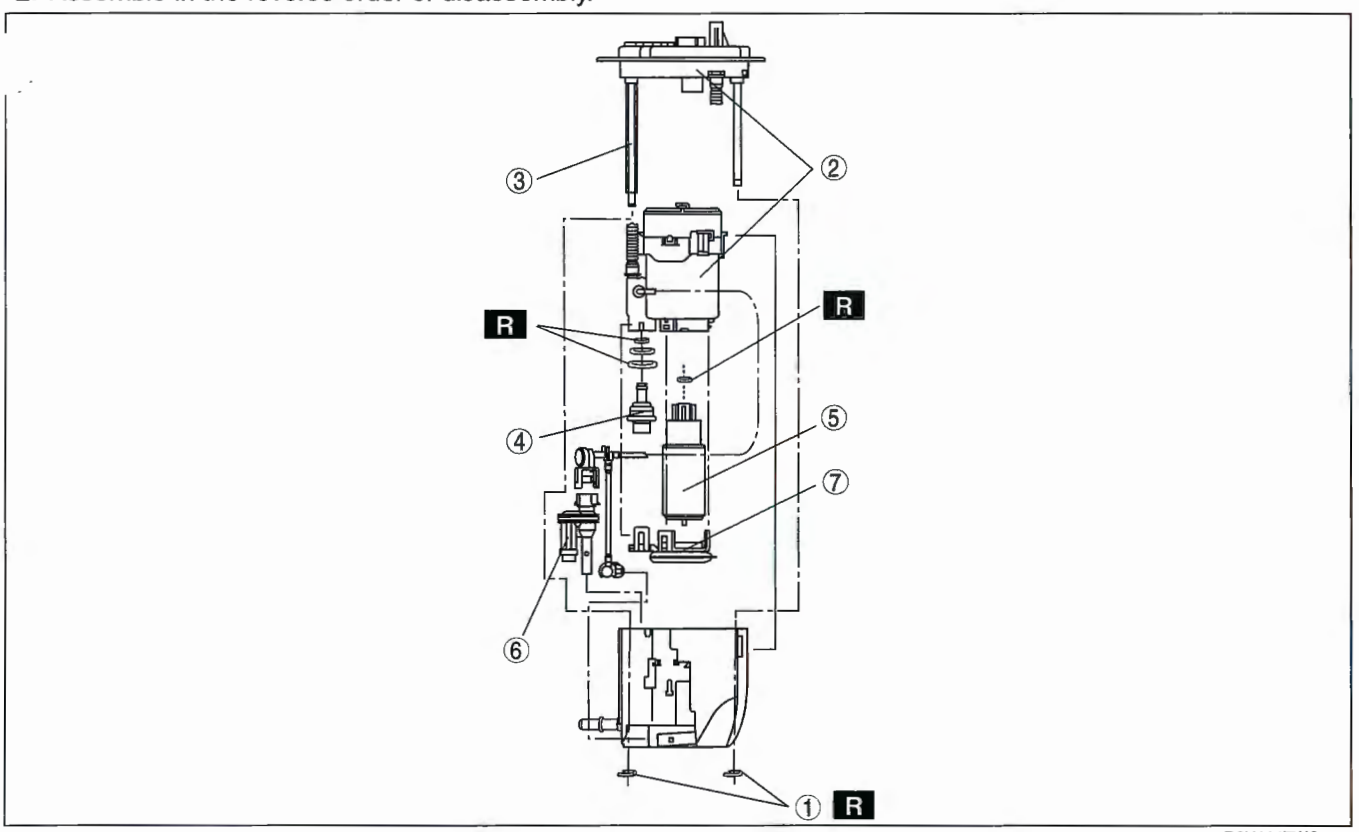

D6U114ZWC100

1	E-ring
2	Fuel filter body
3	Spring
4	Fuel pressure regulator

5	Fuel pump
6	Transfer
7	Filter

FUEL PUMP UNIT INSPECTION [L3 WITH TC]

E6U011413350W06

Continuity Inspection

Note
- Perform the following test only when directed.

1. Disconnect the negative battery cable.
2. Remove the service hole cover. (See 01–14B–9 FUEL PUMP UNIT REMOVAL/INSTALLATION [L3 WITH TC].)
3. Disconnect the fuel pump unit connector.
4. Inspect for continuity between fuel pump unit connector terminals B and D.
   - If there is no continuity, replace the fuel pump body.
   - If as specified, carry out the "Circuit Open/Short Inspection".

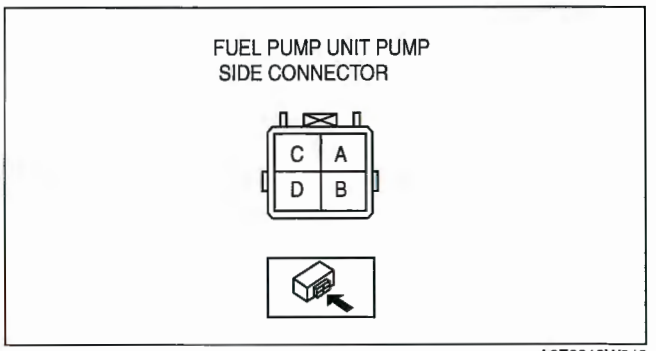

A6E3912W018

Circuit Open/Short Inspection

1. Inspect the following wiring harnesses as for open or short circuit (continuity check).

Open circuit
- If there is no continuity, there is an open circuit. Repair or replace the wiring harness.
  - — Fuel pump unit terminal D and body ground
  - — Fuel pump unit terminal B and fuel pump relay terminal C

Short circuit
- If there is continuity, there is a short circuit. Repair or replace the wiring harness.
  - — Fuel pump unit terminal D and power supply
  - — Fuel pump unit terminal B and body ground

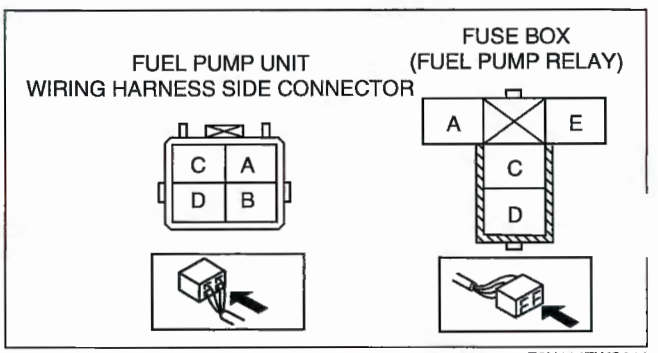

E6U114ZWC011

Fuel Pump Hold Pressure Inspection

Warning
- **Fuel line spills and leakage are dangerous. Fuel can ignite and cause serious injuries or death and damage. Always carry out the following procedure with the engine stopped.**

Caution
- **Disconnecting/connecting the quick release connector without cleaning it may cause damage to the fuel pipe and quick release connector. Always clean the quick release connector joint area before disconnecting/connecting using a cloth or soft brush, and make sure that it is free of foreign material.**

Note
- Perform the following test only when directed.

1. Complete the "BEFORE REPAIR PROCEDURE". (See 01–14B–4 BEFORE REPAIR PROCEDURE [L3 WITH TC].)
2. Disconnect the negative battery cable.
3. Remove the battery and battery tray.

Caution
- **The quick release connector may be damaged if the tab is bent excessively. Do not expand the tab over the stopper.**

4. Disconnect the quick release connector from the fuel tank. (See 01–14B–21 QUICK RELEASE CONNECTOR REMOVAL/INSTALLATION [L3 WITH TC].)
5. Turn the lever **90°** against the hose of the **SST** to plug the **SST** outlet.
6. Push the **SST** quick release connector into the fuel pipe until a click is heard.
7. Set the fuel hose into a container to avoid fuel spills.
8. Connect the negative battery cable.

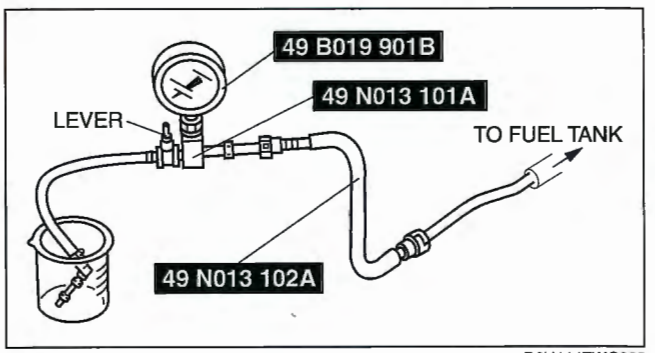

D6U114ZWC028

Caution
- **Connecting to the wrong check connector terminal may cause malfunction. Carefully connect only to the specified terminal.**

9. Short the check connector terminal F/P to body ground using a jumper wire.
10. Turn the ignition switch to the ON position to operate the fuel pump.
11. Turn the ignition switch to the LOCK position.
12. Measure the fuel pump hold pressure **after 5 min.**
    - If not as specified, replace the fuel pump after inspecting the following:
      — Fuel line for clogging or leakage

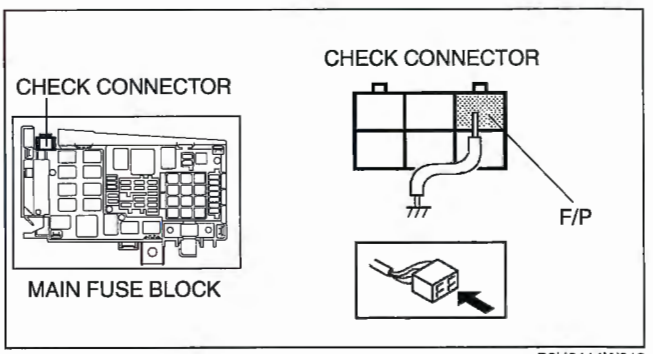

B6U0114W019

Fuel pump hold pressure
More than 230 kPa {2.3 kgf/cm^2, 33 psi}

13. Disconnect the jumper wire.
14. Disconnect the **SST**.
15. Connect the quick release connector. (See 01–14B–21 QUICK RELEASE CONNECTOR REMOVAL/INSTALLATION [L3 WITH TC].)

FUEL PUMP RESISTOR REMOVAL/INSTALLATION [L3 WITH TC]

E6U011413350W07

1. Disconnect the negative battery cable. (See 01–17B–2 BATTERY REMOVAL/INSTALLATION [L3 WITH TC].)
2. Remove the air cleaner. (See 01–13B–4 INTAKE AIR SYSTEM REMOVAL/INSTALLATION [L3 WITH TC].)
3. Disconnect the fuel pump resistor connector.
4. Remove in the fuel pump resistor.

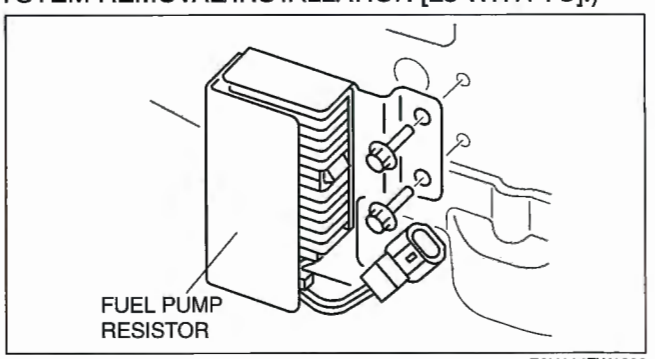

E6U114ZW1003

5. Install in the order as shown in the figure.

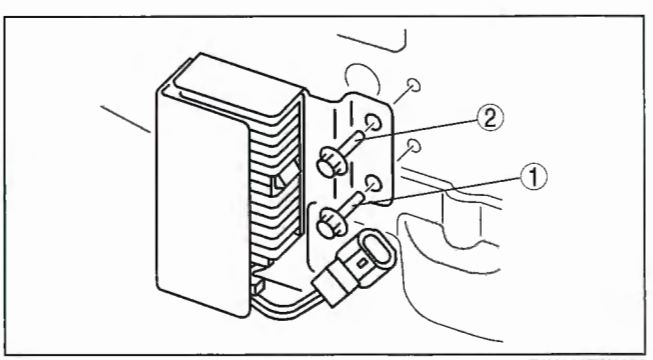

E6U114ZW1002

Tightening torque
4.2—6.2 N·m {43—63 kgf·cm, 38—54 in·lbf}

6. Connect the fuel pump resistor connector.

FUEL PUMP RESISTOR INSPECTION [L3 WITH TC]

E6U011413350W08

Resistance Inspection

1. Disconnect the negative battery cable. (See 01–17B–2 BATTERY REMOVAL/INSTALLATION [L3 WITH TC].)
2. Remove the fuel pump resister. (See 01–14B–17 FUEL PUMP RESISTOR REMOVAL/INSTALLATION [L3 WITH TC].)
3. Verify that the continuity between the fuel pump resister terminal A and B is within the specification.
   - If not within the specification, replace the fuel resistor.

Fuel pump resistor continuity
0.304—0.336 ohms (20 °C {68 °F})

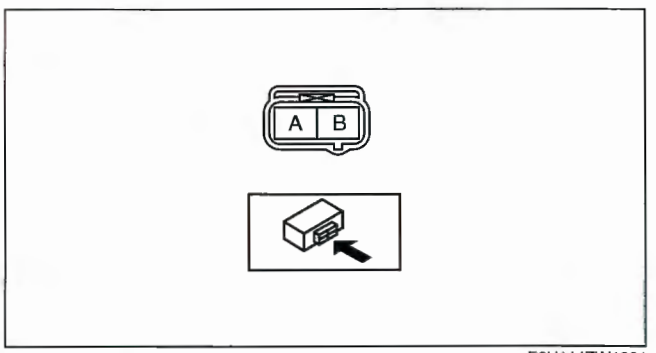

E6U114ZW1001

HIGH PRESSURE FUEL PUMP REMOVAL/INSTALLATION [L3 WITH TC]

E6U011413350W09

Caution

- **Do not disassemble the high pressure fuel pump.**
- **Do not scratch or damage the fuel sealing surface of the high and low fuel ports.**
- **When removing the high pressure fuel pipe, secure the joint (pump side) so that it dose not rotate, and loosen the screw (pipe side).**

Note

- If the high pressure fuel pump is removed, replace the O-ring with a new one.

1. Complete the "BEFORE REPAIR PROCEDURE". (See 01–14B–4 BEFORE REPAIR PROCEDURE [L3 WITH TC].)
2. Disconnect the negative battery cable.
3. Remove the charge air cooler cover.
4. Disconnect the spill valve control solenoid valve connector.
5. Disconnect the quick release connector on the high pressure fuel pump. (See 01–14B–21 QUICK RELEASE CONNECTOR REMOVAL/INSTALLATION [L3 WITH TC].)
6. Remove the battery and battery tray. (See 01–17B–2 BATTERY REMOVAL/INSTALLATION [L3 WITH TC].)

Warning

- **If the high pressure fuel pump joint nut is loosened, fuel leakage may occur resulting in death or serious injury, or damage to the equipment or the vehicle. Fuel can also irritate the skin and eyes. When removing the high pressure line pipe, always tighten the high pressure line pipe installation nut while fixing the high pressure fuel pump joint nut with a wrench. If the high pressure fuel pump joint nut has rotated, replace the high pressure fuel pump with a new one.**

7. Disconnect the high pressure line pipe of the high pressure fuel pump.

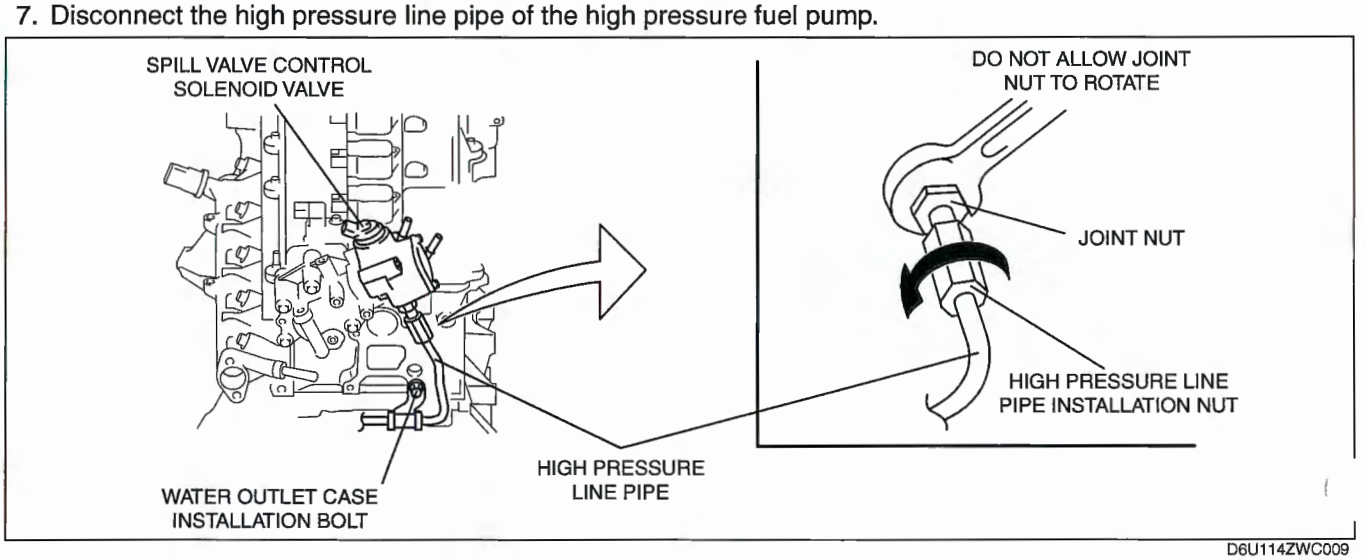

D6U114ZWC009

(1) Fix the joint nut with a wrench on the high pressure fuel pump side as shown in the figure.
(2) Loosen the high pressure line pipe installation nut.

8. Drain engine coolant. (See 01–12B–4 ENGINE COOLANT REPLACEMENT [L3 WITH TC].)
9. Loosen the water outlet case installation bolts securing the high pressure line pipe.
10. Remove the high pressure fuel pump.

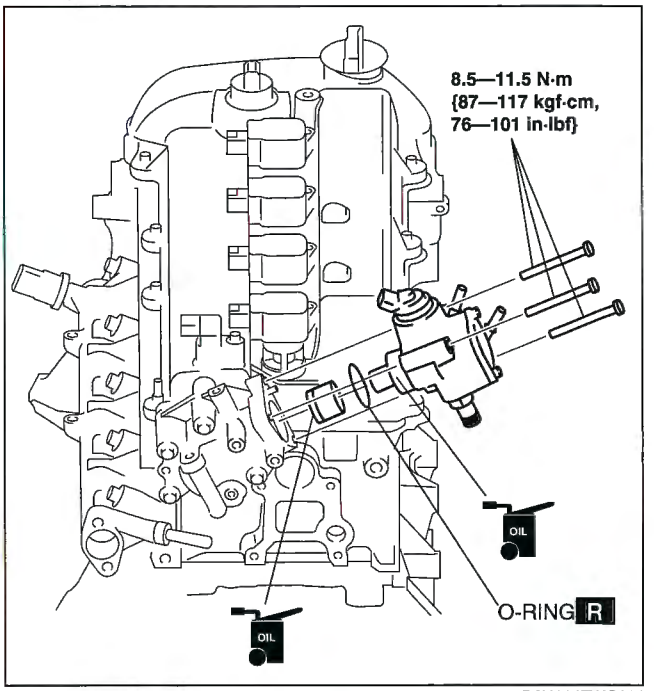

D6U114ZWC004

11. Remove the high pressure fuel pump cover.
12. Tighten the bolts on the high pressure fuel pump cover.

Tightening torque
17—23 N·m {1.8—2.3 kgf·m, 13—16 ft·lbf}

Caution
- **If the high pressure fuel pump installation bolts are tightened with the high pressure fuel pump tilted, the high pressure fuel pump may not operate correctly. Tighten the high pressure fuel pump installation bolts in a few passes with equal torque.**

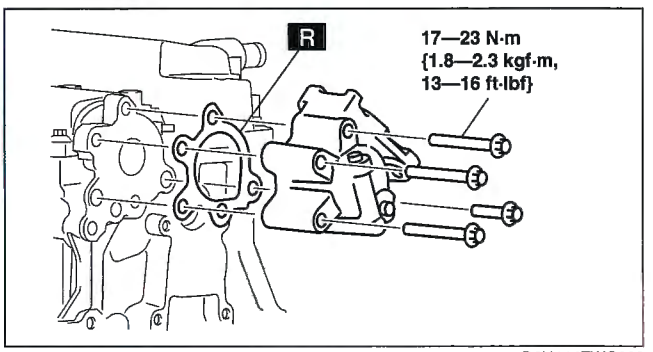

D6U114ZWC022

13. Tighten the bolts on the high pressure fuel pump.

Tightening torque
8.5—11.5 N·m {87—117 kgf·m, 76—101 ft·lbf}

Warning
- **If the high pressure fuel pump joint nut is loosened, fuel leakage may occur resulting in death or serious injury, or damage to the equipment or the vehicle. Fuel can also irritate the skin and eyes. When installing the high pressure line pipe, always tighten the high pressure line pipe installation nut while fixing the high pressure fuel pump joint nut with a wrench. If the high pressure fuel pump joint nut has rotated, replace the high pressure fuel pump with a new one.**

14. Assemble the high pressure line pipe.

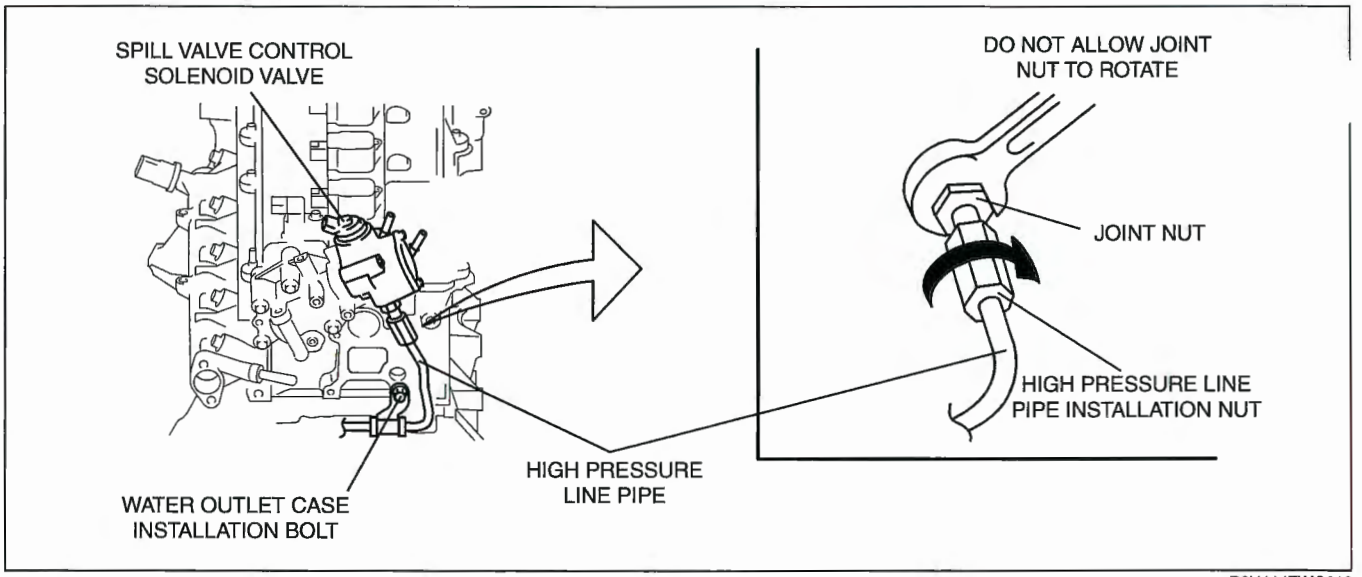

D6U114ZWC010

(1) Fix the joint nut with a wrench on the high pressure fuel pump side as shown in the figure.
(2) Tighten the high pressure line pipe installation nut.

Tightening torque
23.5—35.5 N·m {2.40—3.61 kgf·m, 17.4—26.1 ft·lbf}

15. Tighten the water outlet case installation bolts.

Tightening torque
8—11.5 N·m {82—117 kgf·cm, 71—101 in·lbf}

16. Install the quick release connector. (See 01–14B–21 QUICK RELEASE CONNECTOR REMOVAL/ INSTALLATION [L3 WITH TC].)

Fuel Leakage Inspection After High Pressure Fuel Pump Installation
1. Verify that the high pressure fuel pump is assembled securely.
2. Drive the vehicle starting from a standstill and brake suddenly **five to six times** at a low speed.
3. Stop the vehicle and verify from outside the vehicle that there is no fuel leakage around the high pressure fuel pump.

HIGH PRESSURE FUEL PUMP INSPECTION [L3 WITH TC]

E6U011413350W10

Note
- Perform the following inspection only when directed.
- The following vacuum values are indicated by relative pressure from the fuel pressure sensor.

1. Verify that the fuel pressure sensor is normal. (See 01–40B–34 FUEL PRESSURE SENSOR INSPECTION [L3 WITH TC].)
2. Connect the WDS or equivalent to the DLC-2.
3. Turn the ignition switch to the ON position (Engine off).
4. Select the FUEL_PRES, and LOAD, RPM PIDs on the WDS or equivalent.

Caution
- **If the engine is run at a high speed, it could be damaged. When racing the engine, do not race it up to 6,700 rpm or more.**

5. After the LOAD PID is **60% or more** while the engine is raced with the accelerator pedal fully depressed, verify that the FUEL_PRES PID is **approx. 11.5 Mpa**.
   — If not as verified, replace the high pressure fuel pump.

QUICK RELEASE CONNECTOR REMOVAL/INSTALLATION [L3 WITH TC]

E6U011442692W01

Warning

- **Fuel is very flammable liquid. If fuel spills or leaks from the pressurized fuel system, it will cause serious injury or death and facility breakage. Fuel can also irritate skin and eyes. To prevent this, always complete the "Fuel Line Safety Procedure", while referring to the "BEFORE SERVICE PRECAUTION".**

Quick Release Connector Type

Caution

- **There are four types of quick release connectors. Verify the type and location, and install/remove properly.**

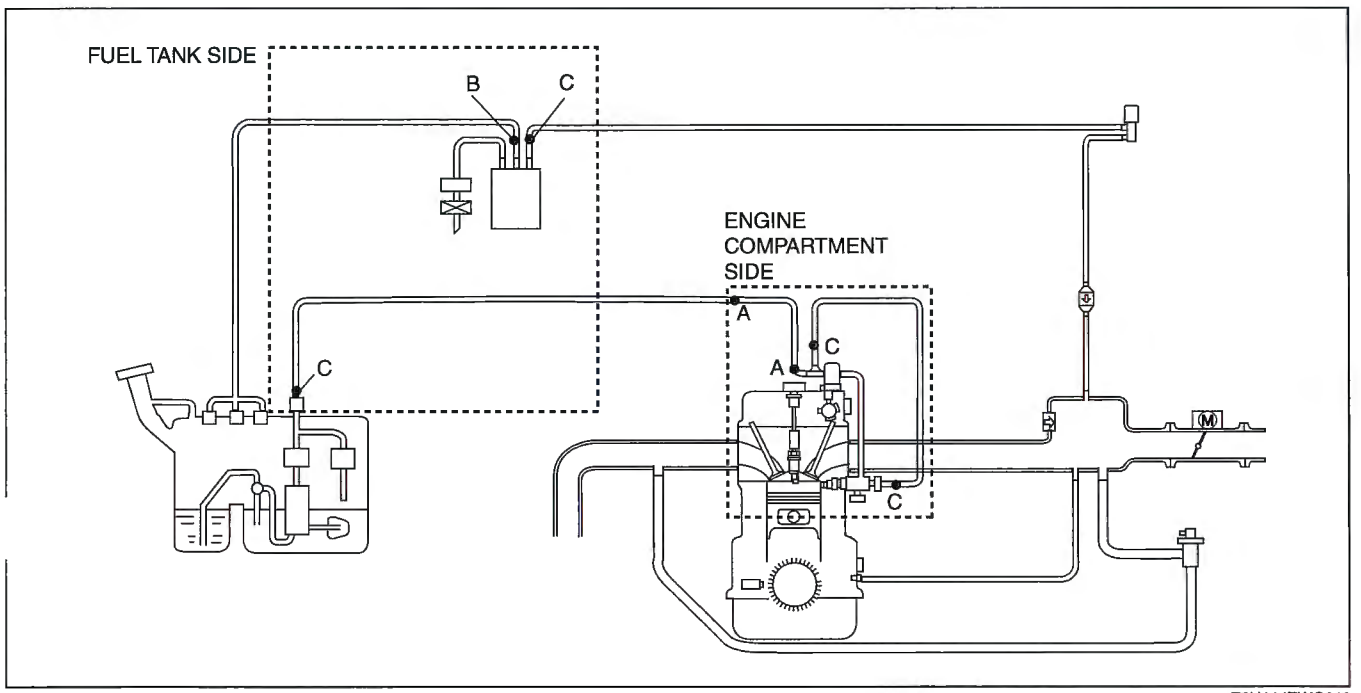

E6U114ZWC010

Type A Removal

1. Follow "BEFORE REPAIR PROCEDURE" before performing any work operations to prevent fuel from spilling from the fuel system. (See 01–14B–4 BEFORE REPAIR PROCEDURE [L3 WITH TC].)

Caution

- **The quick release connector may be damaged if the release tab is bent excessively. Do not expand the release tab over the stopper.**

Note

- The fuel hose can be removed by pushing it to the pipe side to release the lock.

2. Rotate the release tab on the quick release connector to the stopper position.

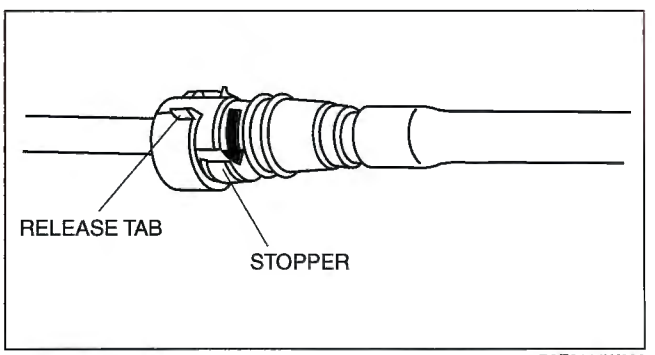

B3E0114W039

3. Pull out the fuel hose straight from the fuel pipe and disconnect it.

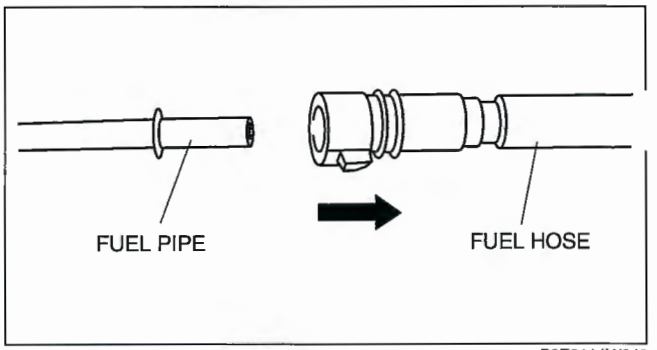

B3E0114W040

4. Cover the disconnected quick release connector and fuel pipe with vinyl sheeting or a similar material to prevent it from scratches or dirt.

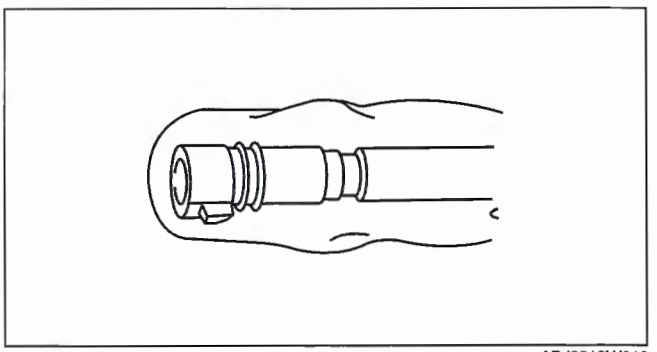
ADJ3912W019

Type B Removal

Caution
- **When releasing the retainer locks, take extreme care not to damage the charcoal canister and pipe.**
- **Be careful not to damage the pipe when unlocking the retainer.**

Note
- If the quick release connector is removed, replace the retainer with a new one.

1. Follow "BEFORE SERVICE PRECAUTION" and remove dirt from the connecting surfaces before performing any work operations. (See 01–14B–4 BEFORE REPAIR PROCEDURE [L3 WITH TC].)

Note
- The retainer is attached to the pipe even after the connector is disconnected.

2. Set the **SST** parallel to the quick release connector.

Note
- The quick release connector can be removed by pushing the center of the retainer tabs.

3. Hold the center of the retainer tabs with the **SST** ends and press the retainer.
4. Pull the connector side and disconnect the quick release connector.

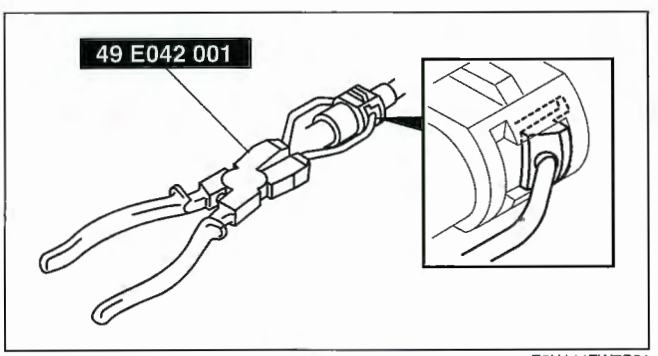

E6U114ZW7S81

5. Raise a retainer tab using the **SST** and remove the retainer.
6. Cover the disconnected quick release connector and evaporative hose with vinyl sheeting or a similar material to prevent it from scratches or dirt.

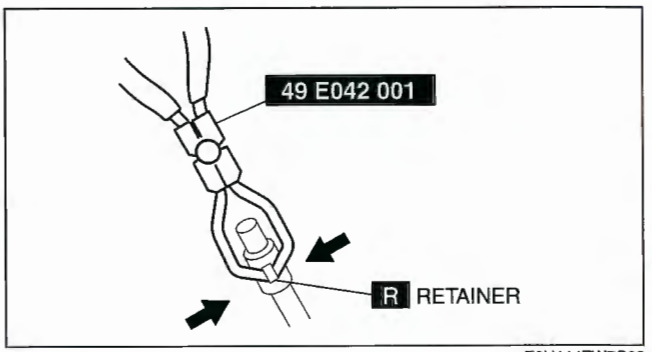

E6U114ZW7S82

Type C Removal

1. Follow "BEFORE REPAIR PROCEDURE" and remove dirt from the connecting surfaces before performing any work operations. (See 01–14B–4 BEFORE REPAIR PROCEDURE [L3 WITH TC].)
2. Move the retainer upward using a small flathead screwdriver or a similar tool.
3. Pull out the fuel hose straight from the fuel pipe and disconnect it.

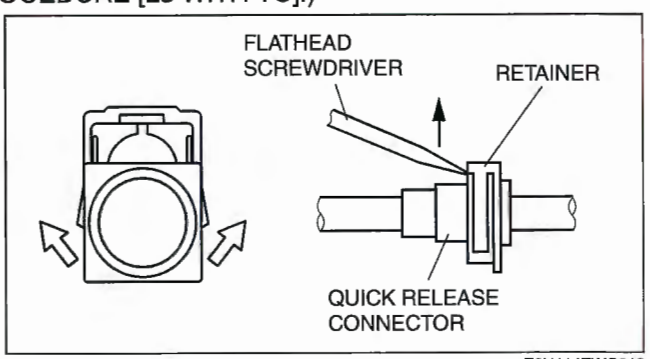

E6U114ZWC013

4. Cover the disconnected quick release connector and fuel pipe with vinyl sheeting or a similar material to prevent it from scratches or dirt.

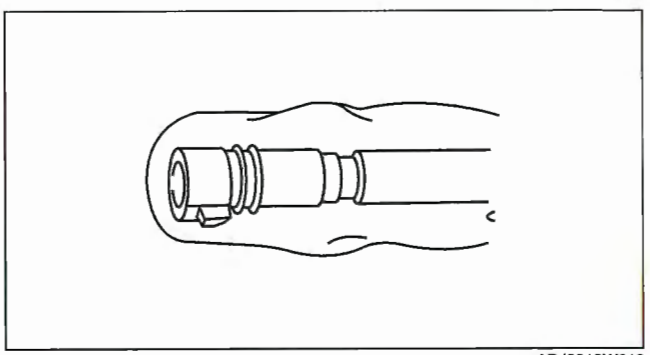
ADJ3912W019

Type A Installation

Note
- If the quick release connector O-ring is damaged or has slipped, replace the fuel hose.
- A checker tab is integrated with the quick release connector for new fuel hoses and evaporative hoses. Remove the checker tab from the quick release connector after the connector is completely engaged with the fuel pipe.

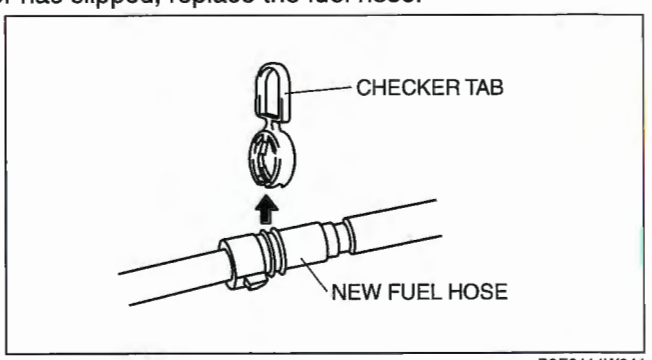

B3E0114W041

1. Inspect the fuel hose and fuel pipe sealing surface for damage and deformation.
   - If there is any malfunction, replace it with a new one.
2. Apply a small amount of clean engine oil to the sealing surface of the fuel pipe.
3. Reconnect the fuel hose straight to the fuel pipe until a click is heard.

Note
- If the quick release connector does not move at all, disconnect it, verify that the O-ring is not damaged or has not slipped, and then reconnect the quick release connector.

4. Lightly pull and push the quick release connector a few times by hand, and then verify that it can move **2.0—3.0 mm {0.08—0.12 in}** and is connected securely.
5. Inspect all related parts by performing "AFTER REPAIR PROCEDURE". (See 01–14B–5 AFTER REPAIR PROCEDURE [L3 WITH TC].)

Type B Installation

Note
- If the quick release connector O-ring is damaged or has slipped, replace the fuel hose.
- A checker tab is integrated with the quick release connector for new fuel hoses and evaporative hoses. Remove the checker tab from the quick release connector after the connector is completely engaged with the fuel pipe.

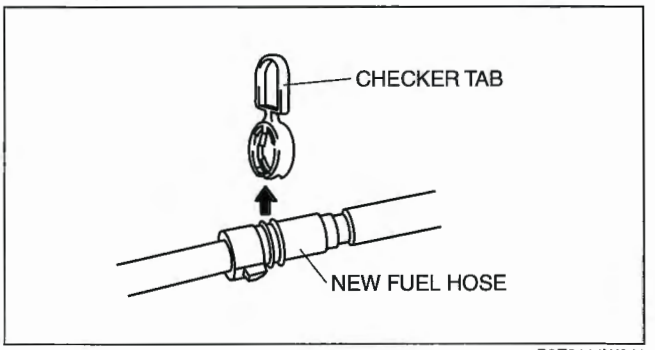

B3E0114W041

Caution
- **Be sure to replace the retainer with a new one to prevent gas leakage.**
- **To prevent evaporative gas leakage, be sure not to damage the connecting part between the charcoal canister and pipe, and the locks between the quick release connector and retainer. If any of them are damaged, replace the charcoal canister or hose with a new one.**

1. Remove the retainer remaining on the charcoal canister pipe.
2. Install a new retainer to the quick release connector.
3. Reconnect the hose straight to the pipe until a click is heard.
4. Lightly pull and push the quick release connector a few times by hand, and then verify that it is connected securely.
5. Inspect all related parts by performing "AFTER REPAIR PROCEDURE". (See 01–14B–5 AFTER REPAIR PROCEDURE [L3 WITH TC].)

Type C Installation

Note
- If the quick release connector O-ring is damaged or has slipped, replace the fuel hose.

1. Inspect the fuel hose and fuel pipe sealing surface for damage and deformation.
   - If there is any malfunction, replace it with a new one.
2. Install the quick release connector.
   - Insert the fuel pipe straight to the end of the quick release connector.
   - Push down the retainer using a finger.
     - — If the retainer cannot be pushed down, push the fuel pipe further to the quick release connector.
3. Lightly pull and push the quick release connector a few times by hand, and then verify that it is connected securely.
4. Inspect all related parts by performing "AFTER REPAIR PROCEDURE". (See 01–14B–5 AFTER REPAIR PROCEDURE [L3 WITH TC].)

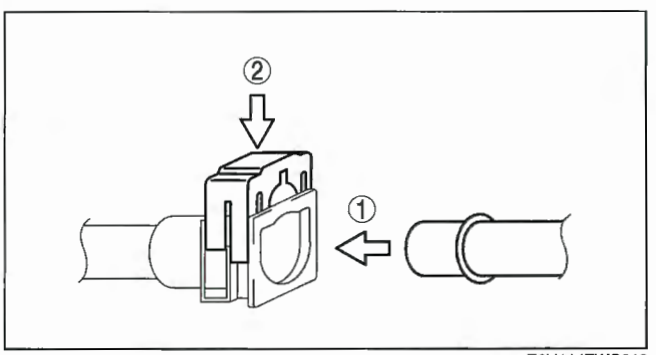

E6U114ZWC012

FUEL INJECTOR REMOVAL/INSTALLATION [L3 WITH TC]

E6U011413250W05

Caution

- **Disconnecting/connecting the quick release connector without cleaning it may cause damage to the fuel pipe and quick release connector. Always clean the quick release connector joint area before disconnecting/connecting using a cloth or soft brush, and make sure that it is free of foreign material.**

Note

- When the fuel pressure sensor replaces, replace a new fuel delivery pipe with a new fuel pressure sensor. 01–14B–25 FUEL INJECTOR REMOVAL/INSTALLATION [L3 WITH TC]

1. Complete the "BEFORE REPAIR PROCEDURE". (See 01–14B–4 BEFORE REPAIR PROCEDURE [L3 WITH TC].)
2. Disconnect the negative battery cable.
3. Remove the intake manifold. (See 01–13B–4 INTAKE AIR SYSTEM REMOVAL/INSTALLATION [L3 WITH TC].)
4. Remove in the order indicated in the table.

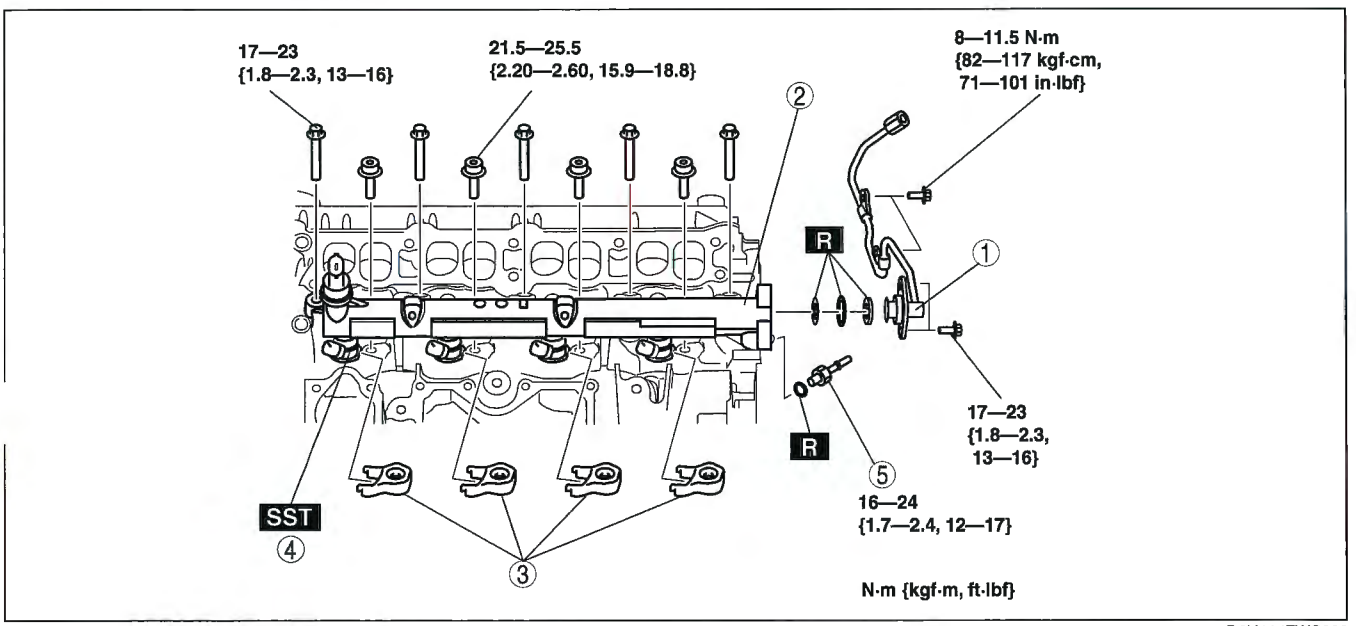

D6U114ZWC023

1	High pressure line pipe (See 01–14B–26 High Pressure Line Pipe Removal Note.) (See 01–14B–28 High Pressure Line Pipe Installation Note.)

2	Fuel delivery pipe (See 01–14B–27 Fuel Delivery Pipe Installation Note.)
3	Fuel injector bracket
4	Fuel injector (See 01–14B–26 Fuel Injector Removal Note.)
5	Relief valve

5. Install in the reverse order of removal.
6. Complete the "AFTER REPAIR PROCEDURE". (See 01–14B–5 AFTER REPAIR PROCEDURE [L3 WITH TC].)

High Pressure Line Pipe Removal Note

1. Drain engine coolant. (See 01–12B–4 ENGINE COOLANT REPLACEMENT [L3 WITH TC].)
2. Disconnect the high pressure line pipe of the high pressure fuel pump. (See 01–14B–18 HIGH PRESSURE FUEL PUMP REMOVAL/INSTALLATION [L3 WITH TC].)

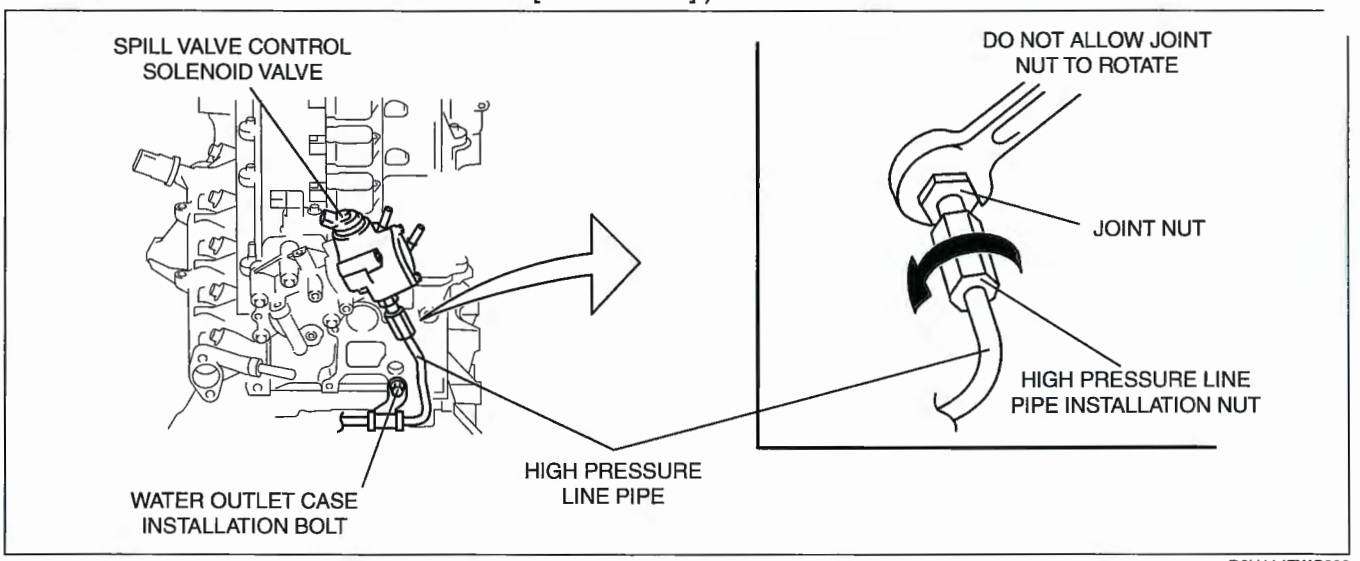

D6U114ZWC009

   (1) Fix the joint nut with a wrench on the high pressure fuel pump side as shown in the figure.
   (2) Loosen the high pressure line pipe installation nut.
3. Remove the high pressure line pipe.

Fuel Injector Removal Note

Note

- Depending on the driving conditions, carbon may accumulate on the inserted part of the fuel injector, causing the fuel injector to stick. Remove the fuel injector using the following procedure.

1. Install the **SST** to the fuel injector confirming that the **SST** faces the correct direction as shown in the figure.

Caution

- **If the SST slips while ratcheting up the fuel injector, the fuel injector or surrounding parts could be damaged. Press fit the SST to the fuel injector firmly and operate carefully.**
- **When ratcheting up the fuel injector, the fuel injector connector may contact the cylinder head and damage the fuel injector. Ratchet up the fuel injector so that the fuel injector connector does not contact the cylinder head.**

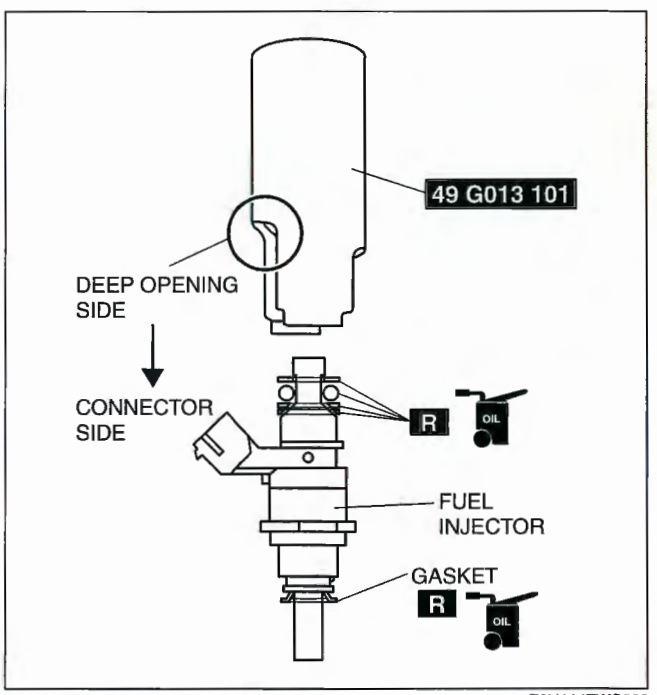

E6U114ZWC008

Note
- If fuel injector No.3 contacts the oil separator, cut the tab on the oil separator as shown in the figure. Carefully cut the tab so that the oil separator is not deformed or damaged, with no clearance on the mating surfaces of the oil separator and engine.

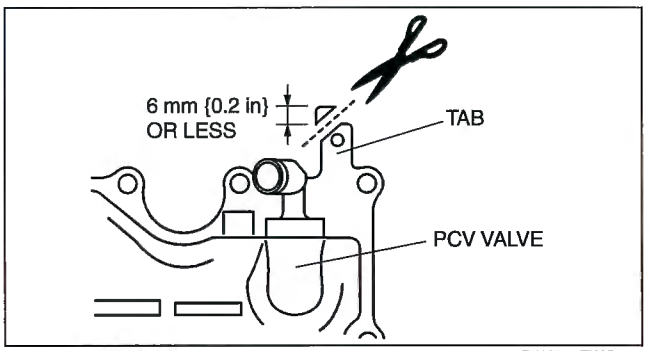

D6U114ZWC101

2. Keep ratcheting the **SST** so that the fuel injector becomes free enough to ratchet up without using the **SST**.

Caution
- **Do not apply excessive force to the fuel injector connector because the fuel injector could be damaged.**

3. Pull out the fuel injector by ratcheting it upright.
4. Verify that there are no gasket in the cylinder heads after removing the fuel injectors.

Warning
- **If foreign material such as metal shavings penetrates the fuel injector installation hole on the cylinder block, the engine could be damaged. Remove all foreign material and cap the fuel injector installation hole after removing the fuel injector.**

5. Clean the fuel injector and around the insertion hole using a vacuum cleaner.

Fuel Delivery Pipe Installation Note

Tighten the bolts in the order shown in the figure.

Tightening torque
17—23 N·m {1.8—2.3 kgf·m, 13—16 ft·lbf}

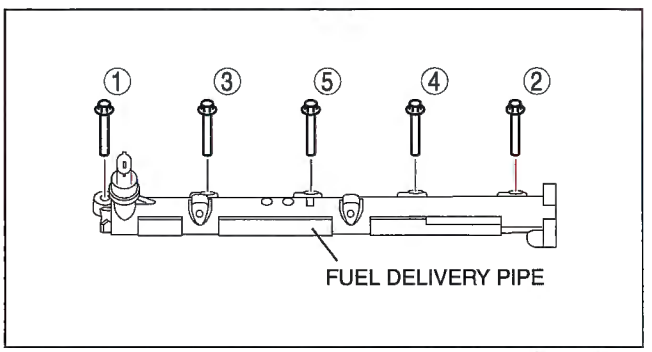

D6U114ZWC024

High Pressure Line Pipe Installation Note

1. Temporarily tighten the bolts and nut in the order shown in the figure.

1	High pressure line pipe installation bolt
2	High pressure line pipe installation nut
3	Water outlet case installation bolt
4	Water outlet case installation bolt

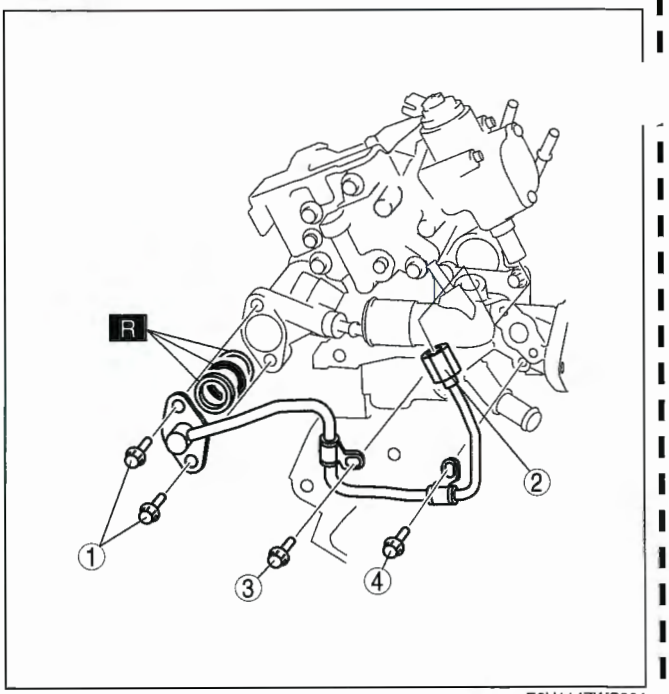

E6U114ZWS301

2. Tighten the high pressure line pipe installation bolts.

Tightening torque
17—23 N·m {1.8—2.3 kgf·m, 13—16 ft·lbf}

3. Tighten the high pressure line pipe installation nut using the following procedures.
   (1) Fix the joint nut with a wrench on the high pressure fuel pump side as shown in the figure.
   (2) Tighten the high pressure line pipe installation nut.

Tightening torque
23.5—35.5 N·m {2.40—3.61 kgf·m, 17.4—26.1 ft·lbf}

4. Tighten the water outlet case installation bolts.

Tightening torque
8—11.5 N·m {82—117 kgf·cm, 71—101 in·lbf}

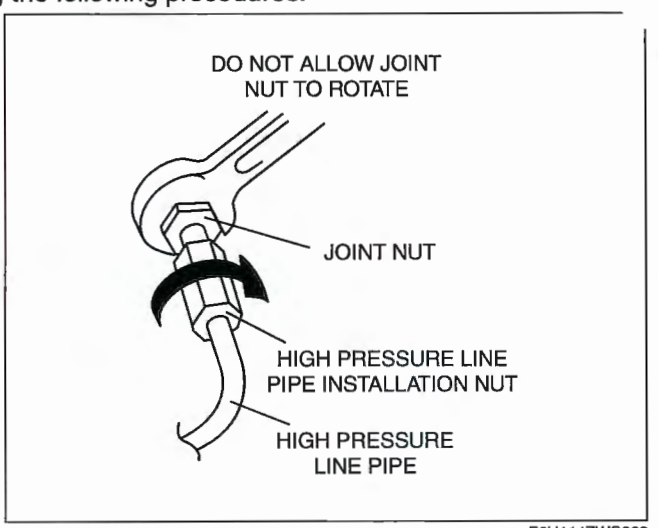

E6U114ZWS302

FUEL INJECTOR INSPECTION [L3 WITH TC]

E6U011413250W06

Operation Test

1. Carry out the "Fuel Injector Operation Inspection". (See 01–03A–68 Fuel Injector Operation Inspection.)
   - If not as specified, perform the further inspection for the fuel injectors.

Resistance Inspection

Note
- Perform the following procedure only when directed.

1. Turn the ignition switch to the LOCK position.
2. Disconnect the negative battery cable.
3. Remove the fuel delivery pipe. (See 01–14B–25 FUEL INJECTOR REMOVAL/INSTALLATION [L3 WITH TC].)
4. Disconnect the fuel injector connectors.
5. Measure the resistance of the fuel injector using a tester.
   - If not as specified, replace the fuel injector. (See 01–14B–25 FUEL INJECTOR REMOVAL/INSTALLATION [L3 WITH TC].)
   - If as specified but "Operation Test" is failed, carry out the "Circuit Open/Short Inspection". Inspect for open or short circuit.

Fuel injector resistance
1.0—1.2 ohms [20 °C {68 °F}]

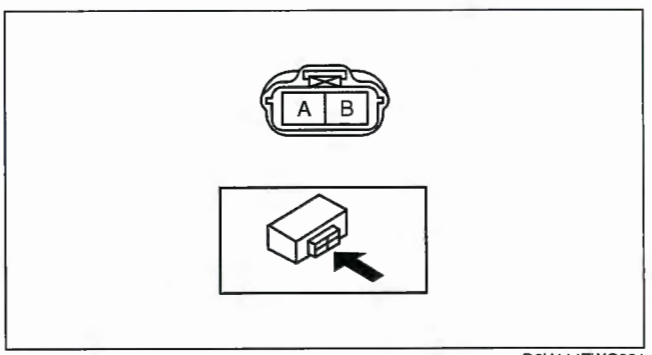

D6U114ZWC031

Circuit Open/Short Inspection

1. Disconnect the PCM connector. (See 01–40B–6 PCM REMOVAL/INSTALLATION [L3 WITH TC].)
2. Inspect the following wiring harnesses for an open or short circuit (continuity check).

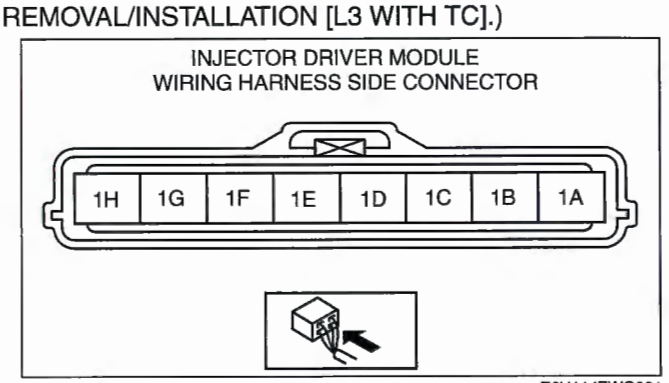

E6U114ZWC001

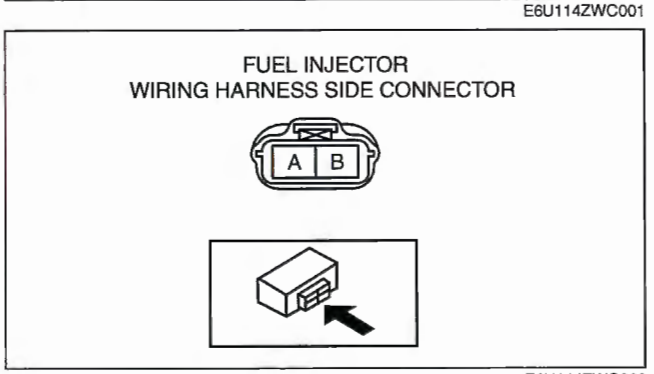

E6U114ZWC009

Open circuit
- If there is no continuity, there is an open circuit. Repair or replace the wiring harness.
  - — No.1 cylinder fuel injector terminal B and injector driver module terminal 1F
  - — No.2 cylinder fuel injector terminal B and injector driver module terminal 1A
  - — No.3 cylinder fuel injector terminal B and injector driver module terminal 1A
  - — No.4 cylinder fuel injector terminal B and injector driver module terminal 1F
  - — No.1 cylinder fuel injector terminal A and injector driver module terminal 1E
  - — No.2 cylinder fuel injector terminal A and injector driver module terminal 1B
  - — No.3 cylinder fuel injector terminal A and injector driver module terminal 1C
  - — No.4 cylinder fuel injector terminal A and injector driver module terminal 1D

Short circuit
- If there is continuity, there is a short circuit. Repair or replace the wiring harness.
  - — No.1 cylinder fuel injector terminal B and body Ground
  - — No.2 cylinder fuel injector terminal B and body Ground
  - — No.3 cylinder fuel injector terminal B and body Ground
  - — No.4 cylinder fuel injector terminal B and body Ground
  - — No.1 cylinder fuel injector terminal A and power supply or body Ground
  - — No.2 cylinder fuel injector terminal A and power supply or body Ground
  - — No.3 cylinder fuel injector terminal A and power supply or body Ground
  - — No.4 cylinder fuel injector terminal A and power supply or body Ground

PRESSURE REGULATOR INSPECTION [L3 WITH TC]

E6U011413280W02

Note

- Due to the adoption of the mechanical returnless fuel system, the pressure regulator cannot be inspecte separately.

1. Perform "FUEL LINE PRESSURE INSPECTION". (See 01–14B–5 FUEL LINE PRESSURE INSPECTION [L3 WITH TC].)

01–15A EXHAUST SYSTEM [L3]

EXHAUST SYSTEM INSPECTION [L3] 01–15A–1
EXHAUST SYSTEM REMOVAL/INSTALLATION [L3] 01–15A–2
HO2S Removal Note 01–15A–5
Exhaust Manifold Insulator (Lower) Installation Note 01–15A–5
Exhaust Manifold Installation Note 01–15A–6
Bracket Installation Note (California Emission Regulation Applicable ATX Model) 01–15A–6
Bracket Installation Note (Except for California Emission Regulation Applicable ATX Model) 01–15A–6
Exhaust Manifold Insulator (Upper) Installation Note 01–15A–7

EXHAUST SYSTEM INSPECTION [L3]

E6U011500000W03

1. Start the engine and inspect each exhaust system component for exhaust gas leakage.
   - If there is leakage, repair or replace if necessary.

EXHAUST SYSTEM REMOVAL/INSTALLATION [L3]

E6U011500000W04

Warning

- **A hot engine and exhaust system can cause severe burns. Turn off the engine and wait until they are cool before removing the exhaust system.**

1. Remove in the order indicated in the table.
2. Install in the reverse order of removal.

California emission regulation applicable ATX model

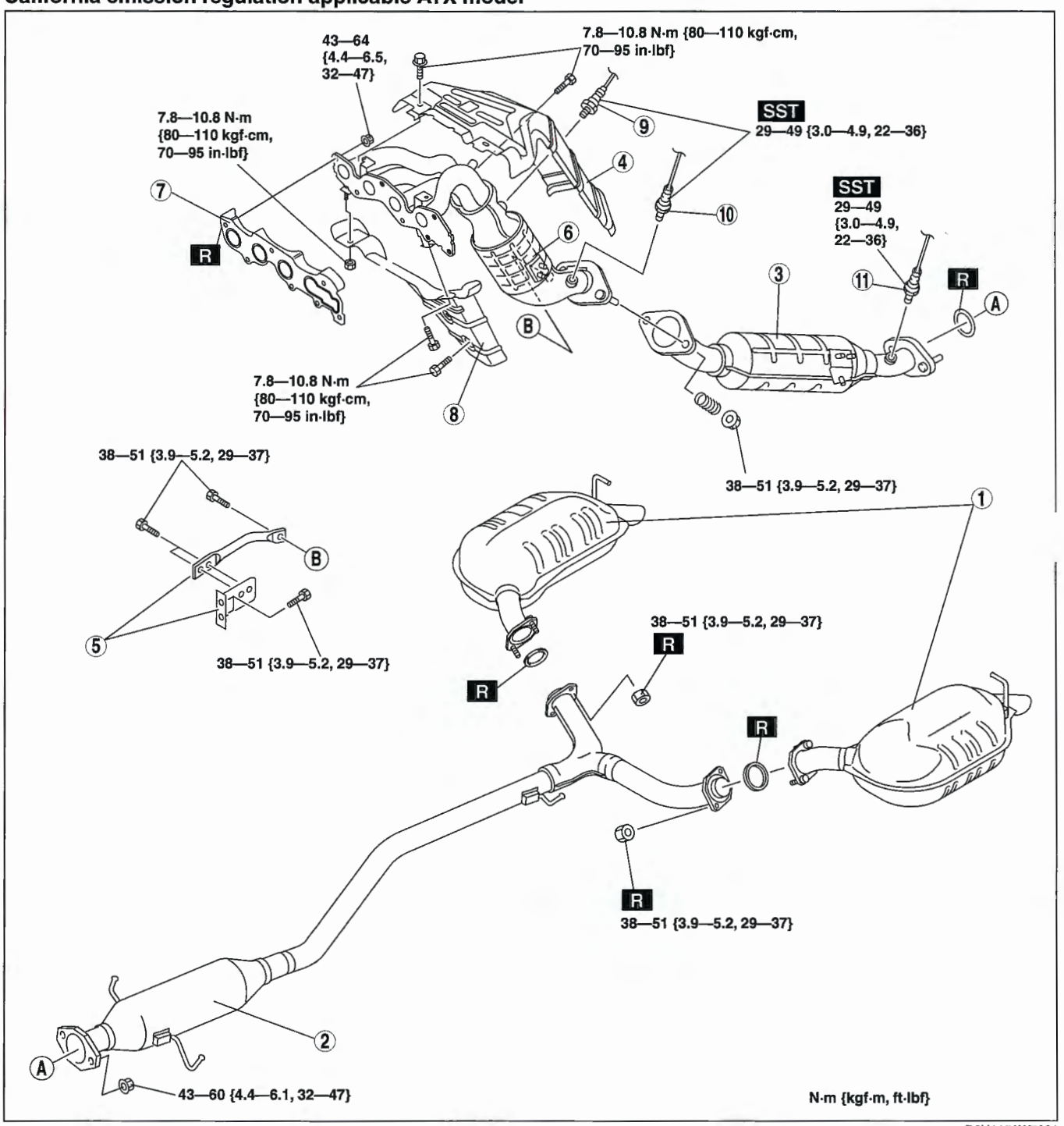

D6U115AW7001

1	Main silencer
2	Presilencer
3	TWC
4	Exhaust manifold insulator (upper) (See 01–15A–7 Exhaust Manifold Insulator (Upper) Installation Note)
5	Bracket (See 01–15A–6 Bracket Installation Note (California Emission Regulation Applicable ATX Model))
6	WU–TWC (See 01–15A–6 Exhaust Manifold Installation Note)
7	Gasket
8	Exhaust manifold insulator (lower) (See 01–15A–5 Exhaust Manifold Insulator (Lower) Installation Note)

9	HO2S (front) (See 01–15A–5 HO2S Removal Note)
10	HO2S (middle) (See 01–15A–5 HO2S Removal Note)
11	HO2S (rear) (See 01–15A–5 HO2S Removal Note)

Except for California emission regulation applicable ATX model

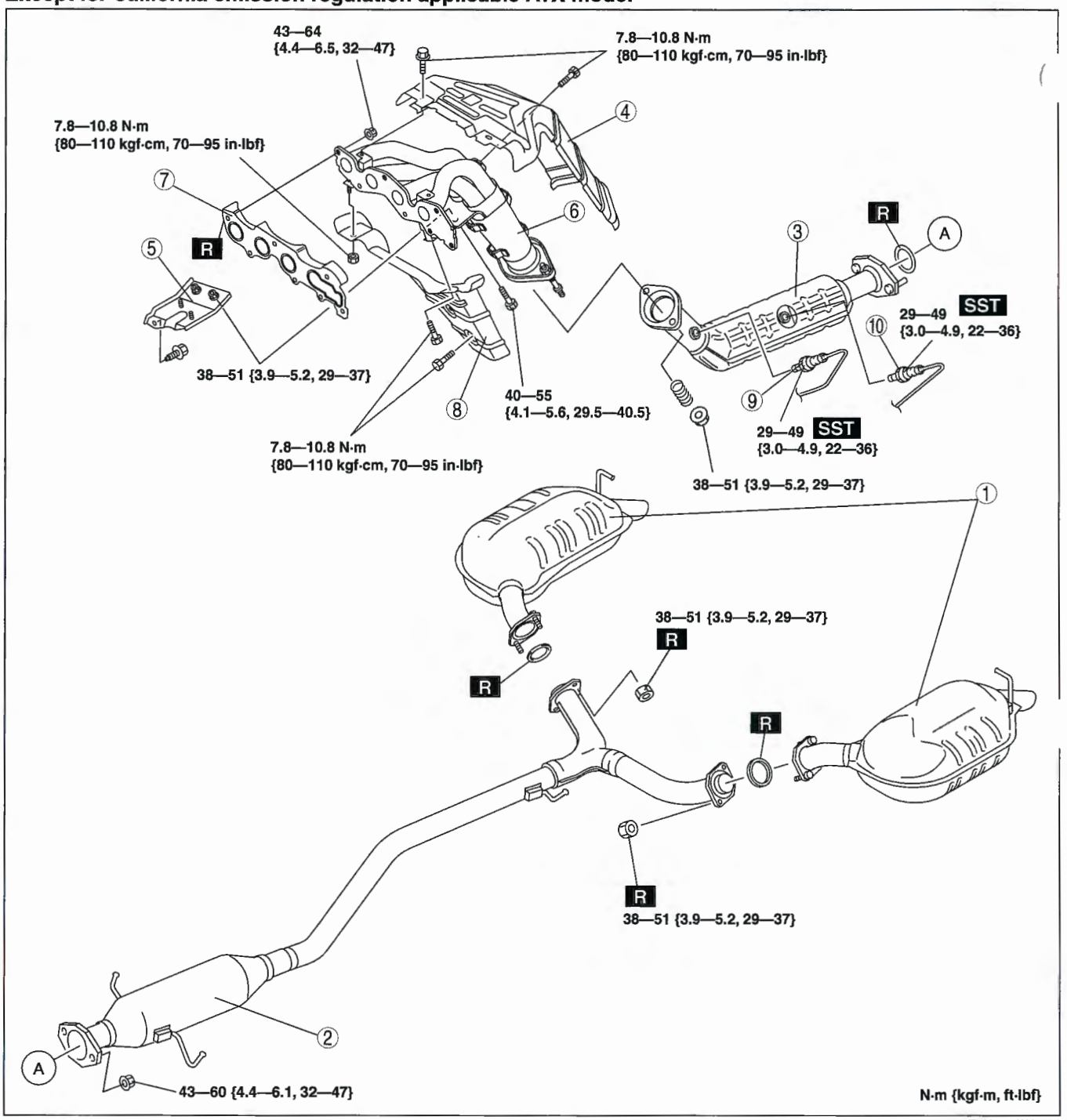

E6U115AW5001

1	Main silencer
2	Presilencer
3	TWC
4	Exhaust manifold insulator (upper) (See 01–15A–7 Exhaust Manifold Insulator (Upper) Installation Note)
5	Bracket (See 01–15A–6 Bracket Installation Note (Except for California Emission Regulation Applicable ATX Model))
6	Exhaust manifold (See 01–15A–6 Exhaust Manifold Installation Note)
7	Gasket
8	Exhaust manifold insulator (lower) (See 01–15A–5 Exhaust Manifold Insulator (Lower) Installation Note)
9	HO2S (front) (See 01–15A–5 HO2S Removal Note)
10	HO2S (rear) (See 01–15A–5 HO2S Removal Note)

HO2S Removal Note

1. Remove the HO2S using the **SST** before removing the exhaust manifold.

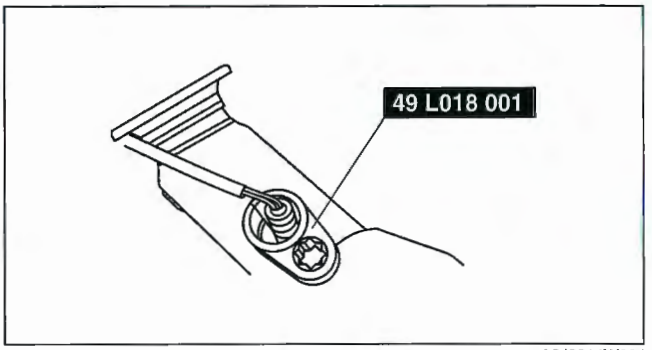

A6J3914W004

Exhaust Manifold Insulator (Lower) Installation Note

1. Tighten the exhaust manifold insulator (lower) installation bolts in the order shown.

   Tightening torque
   7.8—10.8 N·m {80—110 kgf·cm, 70—95 in·lbf}

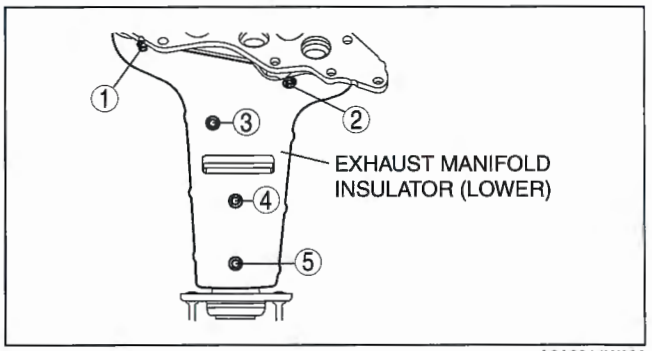

A6A3914W003

2. Verify that the insulator is installed as shown.

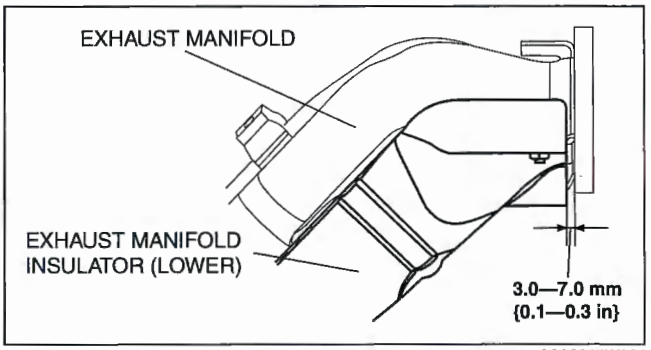

A6A3914W004

Exhaust Manifold Installation Note

1. Tighten the exhaust manifold installation nuts in the order shown.

California emission regulation applicable ATX model

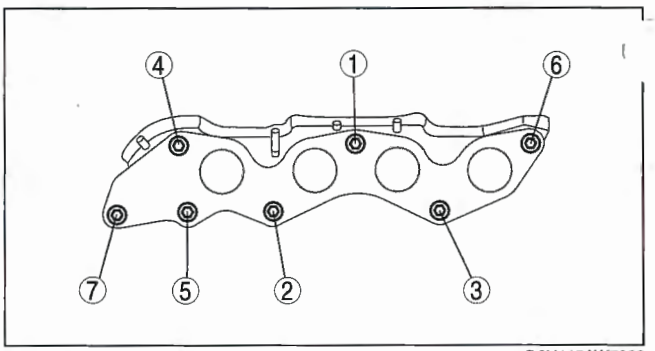

D6U115AW7003

Except for California emission regulation applicable ATX model

Tightening torque
43—64 N·m {4.4—6.5 kgf·m, 32—47 ft·lbf}

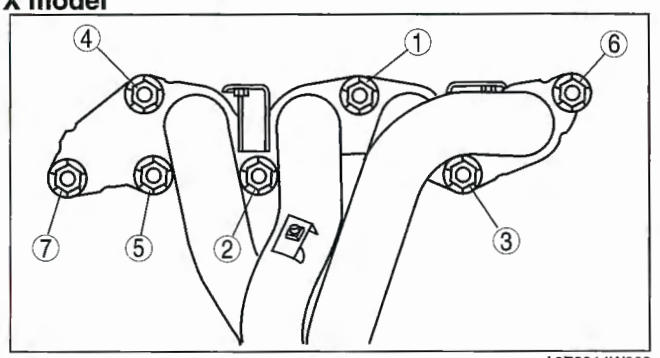

A6E3914W003

Bracket Installation Note (California Emission Regulation Applicable ATX Model)

1. Install bracket A using bolts A and tighten to the Specified torque.

Tightening torque
38—51 N·m {3.9—5.2 kgf·m, 29—37 ft·lbf}

2. Temporarily install bracket B using bolts B.
3. Tighten bolts B to the Specified torque.

Tightening torque
38—51 N·m {3.9—5.2 kgf·m, 29—37 ft·lbf}

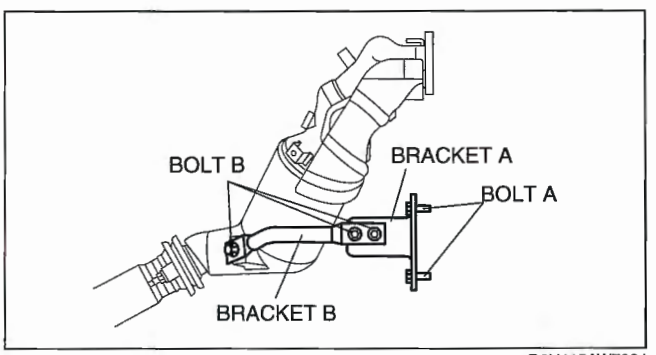

D6U115AW7004

Bracket Installation Note (Except for California Emission Regulation Applicable ATX Model)

1. Temporarily tighten the exhaust manifold side bolts.
2. Verify that the gap between the exhaust manifold and the bracket is **2.0—4.0 mm {0.08—0.16 in}**.
3. Fully tighten the cylinder block side bolt.

Tightening torque
38—51 N·m {3.9—5.2 kgf·m, 29—37 ft·lbf}

4. Fully tighten the exhaust manifold side bolts.

Tightening torque
40—55 N·m {4.1—5.6 kgf·m, 29.5—40.5 ft·lbf}

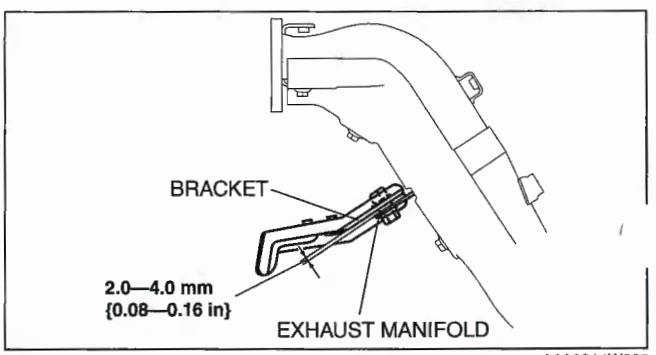

A6A3914W005

Exhaust Manifold Insulator (Upper) Installation Note

1. Tighten the exhaust manifold insulator (upper) installation bolts in the order shown.

California emission regulation applicable ATX model

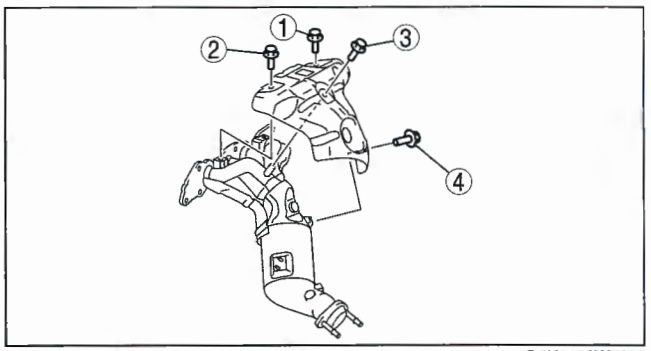

D6U115AW7002

Except for California emission regulation applicable ATX model

Tightening torque
7.8—10.8 N·m {80—110 kgf·cm, 70—95 in·lbf}

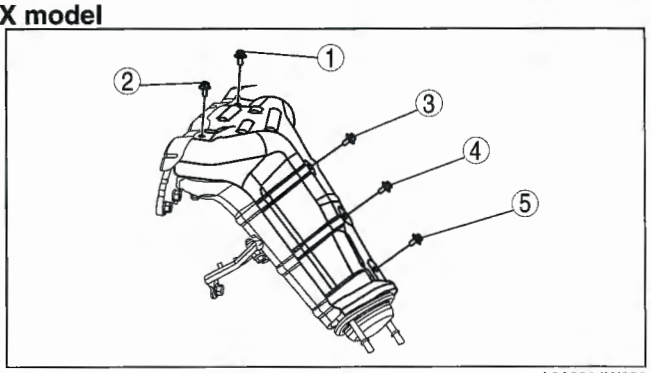

A6A3914W006

01–15B EXHAUST SYSTEM [L3 WITH TC]

EXHAUST SYSTEM INSPECTION [L3 WITH TC] 01–15B–1
EXHAUST SYSTEM REMOVAL/INSTALLATION [L3 WITH TC] 01–15B–2
HO2S Removal Note **01–15B–3**
Insulator Removal Note **01–15B–3**
WU-TWC Removal Note **01–15B–3**
Exhaust Manifold Installation Note **01–15B–3**
WU-TWC Installation Note **01–15B–4**
Middle Pipe and Main Silencer Installation Note **01–15B–4**

EXHAUST SYSTEM INSPECTION [L3 WITH TC]

E6U011500000W05

1. Start the engine and inspect each exhaust system component for exhaust gas leakage.
   - If there is leakage, repair or replace if necessary.

EXHAUST SYSTEM REMOVAL/INSTALLATION [L3 WITH TC]

E6U011500000W06

Warning

- **A hot engine and exhaust system can cause severe burns. Turn off the engine and wait until they are cool before removing the exhaust system.**

1. Remove the negative battery cable.
2. Remove in the order indicated in the table.
3. Install in the reverse order of removal.

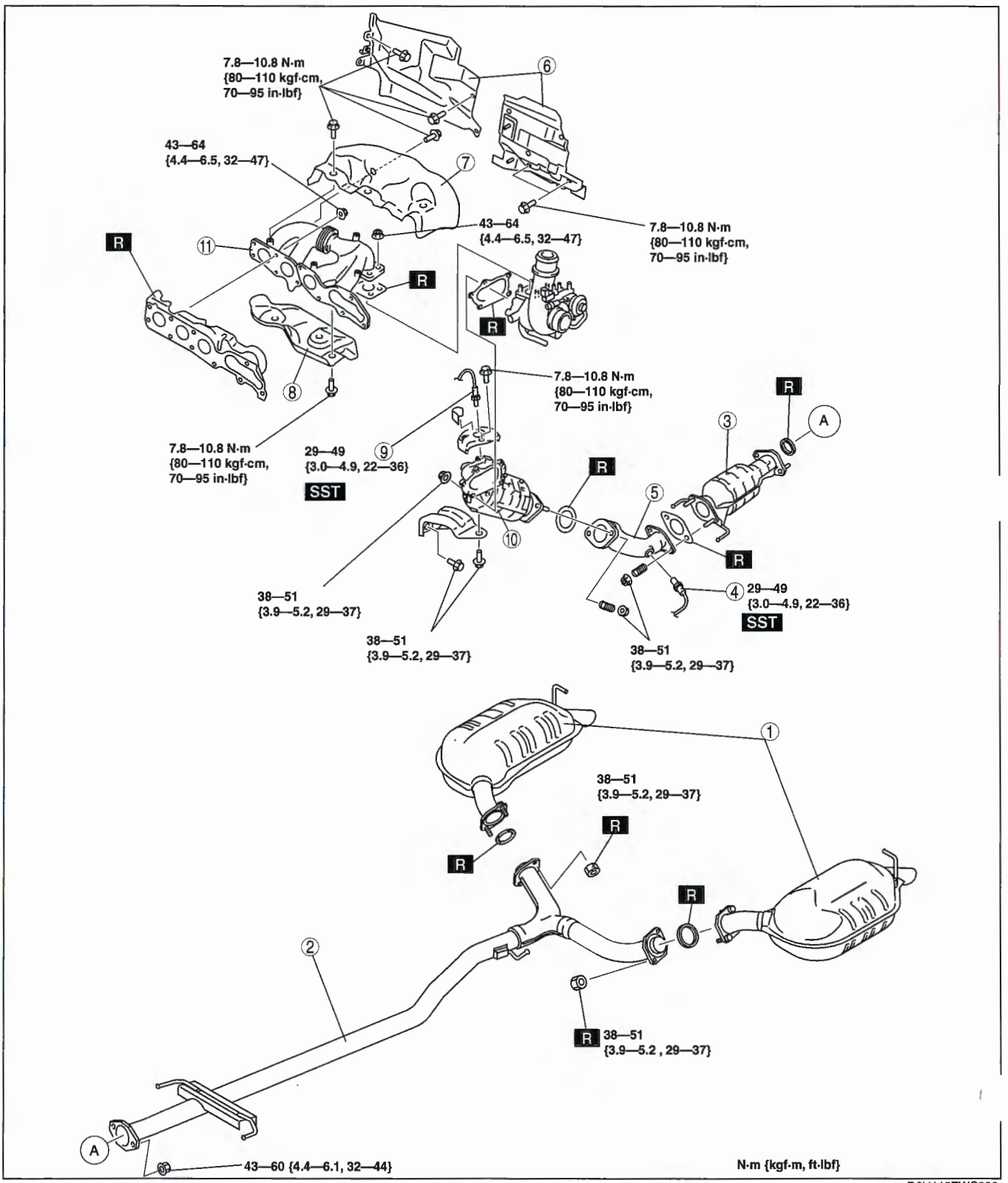

D6U115ZWC003

1	Main silencer
2	Middle pipe (See 01–15B–4 Middle Pipe and Main Silencer Installation Note.)
3	TWC
4	HO2S (rear) (See 01–15B–3 HO2S Removal Note.)
5	Front pipe
6	Insulator (See 01–15B–3 Insulator Removal Note.)

7	Exhaust manifold insulator (Upper)
8	Exhaust manifold insulator (Lower)
9	HO2S (front) (See 01–15B–3 HO2S Removal Note.)
10	WU-TWC (See 01–15B–3 WU-TWC Removal Note.) (See 01–15B–4 WU-TWC Installation Note.)
11	Exhaust manifold (See 01–15B–3 Exhaust Manifold Installation Note.)

HO2S Removal Note

1. Remove the insulator (WU-TWC top side). (Front HO2S)
2. Remove the battery and battery tray. (See 01–17B–2 BATTERY REMOVAL/INSTALLATION [L3 WITH TC].)
3. Remove the HO2S using the **SST** before removing the exhaust manifold.

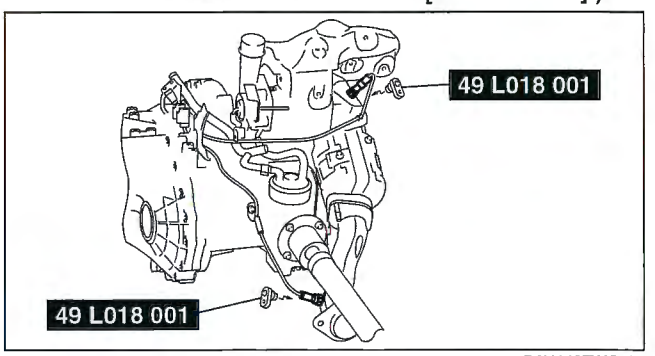

D6U140ZWC009

Insulator Removal Note

1. Remove the charge air cooler and the charge air cooler bracket. (See 01–13B–4 INTAKE AIR SYSTEM REMOVAL/INSTALLATION [L3 WITH TC].)

Caution

- **When removing the cowl, a part or tool may hit the edge of the windshield and could damage it. Protect the windshield by covering it with a clean rag to prevent damage to the windshield.**

2. Remove the cowl grille. (See 09–16–4 COWL GRILLE REMOVAL/INSTALLATION [L3 WITH TC].)
3. Remove the insulators.

WU-TWC Removal Note

1. Set the generator out of the way.
2. Disconnect the vacuum hose (Master cylinder side).
3. Remove the WU-TWC.

Exhaust Manifold Installation Note

1. Tighten the exhaust manifold installation nuts in the order shown.

Tightening torque
43—64 N·m {4.4—6.5 kgf·m, 32—47 ft·lbf}

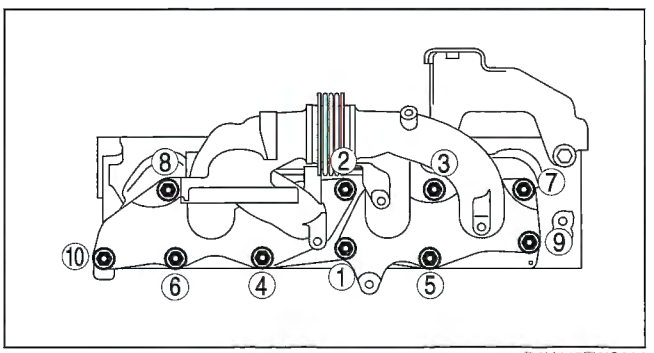

D6U115ZWC004

WU-TWC Installation Note

1. Temporarily tighten No.1 shown in the figure.
2. Temporarily tighten No.2 shown in the figure.
3. Temporarily tighten No.3 shown in the figure.
4. Completely tighten No.1 shown in the figure.

   Tightening torque
   38—51 N·m {3.9—5.2 kgf·m, 29—37 ft·lbf}

5. Completely tighten No.2 shown in the figure.

   Tightening torque
   38—51 N·m {3.9—5.2 kgf·m, 29—37 ft·lbf}

6. Completely tighten No.3 shown in the figure.

   Tightening torque
   38—51 N·m {3.9—5.2 kgf·m, 29—37 ft·lbf}

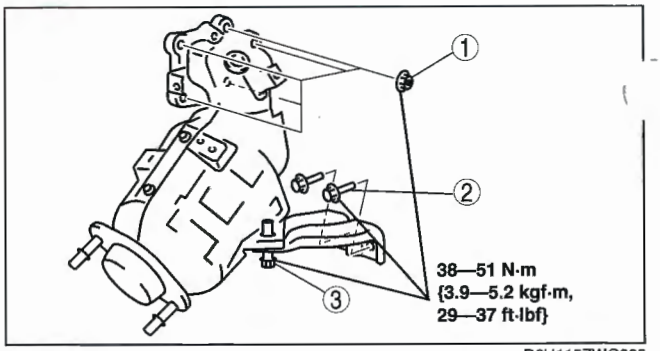

D6U115ZWC005

Middle Pipe and Main Silencer Installation Note

Note
- If any the following parts are removed, loosen all the nuts installed between these parts and perform the following procedure: catalytic converter, middle pipe, main silencer.

1. Set the middle pipe mount, and temporarily tighten to the catalytic converter.
2. Set the left and right main silencer mounts, and temporarily tighten to the middle pipe.
3. Completely tighten the installation nuts between the catalytic converter and middle pipe.

   Tightening torque
   43—60 N·m {4.4—6.1 kgf·m, 32—44 ft·lbf}

4. Completely tighten the installation nuts between main silencer and middle pipe in the order of left side, then right side.

   Tightening torque
   38—51 N·m {3.9—5.2 kgf·m, 29—37 ft·lbf}

01–15C EXHAUST SYSTEM [AJ]

EXHAUST SYSTEM INSPECTION [AJ] 01–15C–1
EXHAUST SYSTEM REMOVAL/INSTALLATION [AJ] 01–15C–2
HO2S Removal Note 01–15C–3
Exhaust Manifold (RH) Removal Note 01–15C–3
Exhaust Manifold (LH) Installation Note 01–15C–3
Exhaust Manifold (RH) Installation Note 01–15C–3

EXHAUST SYSTEM INSPECTION [AJ]

E6U011500000W01

1. Start the engine and inspect each exhaust system component for exhaust gas leakage.
   - If there is leakage, repair or replace if necessary.

EXHAUST SYSTEM REMOVAL/INSTALLATION [AJ]

E6U011500000W02

Warning

- **When the engine and exhaust system are hot, they can badly burn. Turn off the engine and wait until they are cool before removing the exhaust system.**

1. Disconnect the negative battery cable.
2. Remove in the order indicated in the table.
3. Install in the reverse order of removal.

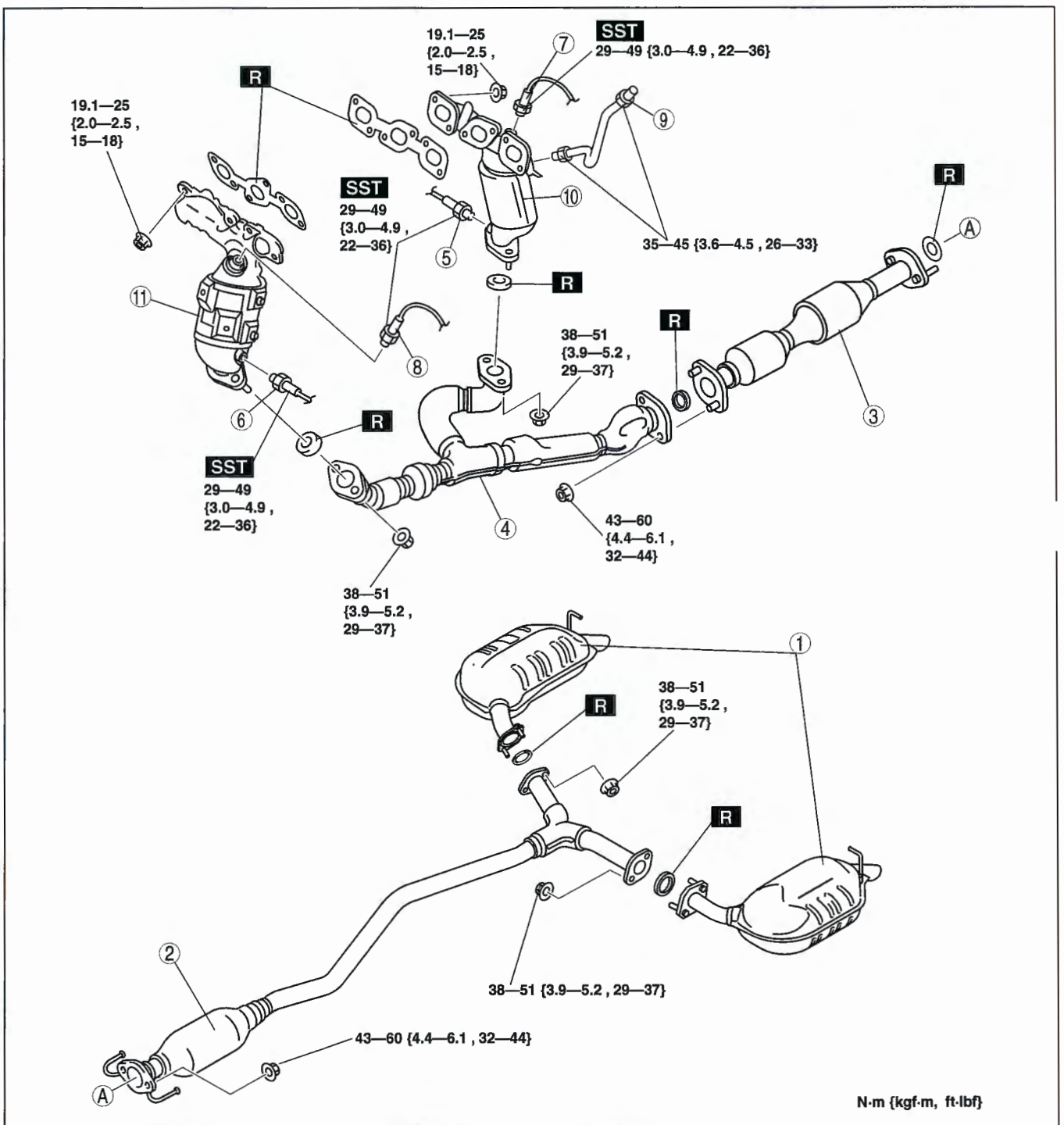

E6U115BW5L0

1	Main silencer
2	Presilencer
3	TWC
4	Front pipe

5	HO2S (RR) (See 01–15C–3 HO2S Removal Note)
6	HO2S (LR) (See 01–15C–3 HO2S Removal Note)

7	HO2S (RF) (See 01–15C–3 HO2S Removal Note)
8	HO2S (LF) (See 01–15C–3 HO2S Removal Note)
9	EGR pipe
10	Exhaust manifold, WU-TWC (RH) (See 01–15C–3 Exhaust Manifold (RH) Removal Note) (See 01–15C–3 Exhaust Manifold (RH) Installation Note)
11	Exhaust manifold, WU-TWC (LH) (See 01–15C–3 Exhaust Manifold (LH) Installation Note)

HO2S Removal Note

1. Remove the HO2S using the **SST**.

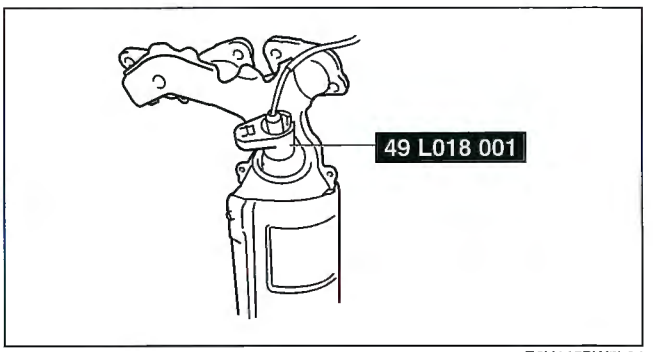

E6U115BW5L04

Exhaust Manifold (RH) Removal Note

1. Disconnect the generator bracket before removing the exhaust manifold (RH). (See 01–17A–4 GENERATOR REMOVAL/INSTALLATION [L3, AJ].)

Exhaust Manifold (LH) Installation Note

Tighten the exhaust manifold installation nuts in the order shown.

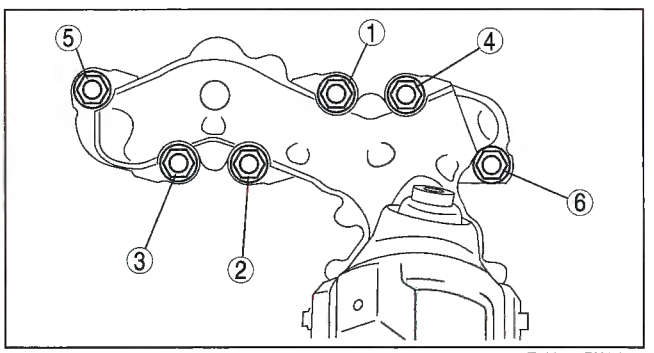

E6U115BW5L03

Exhaust Manifold (RH) Installation Note

1. Tighten the exhaust manifold installation nuts in the order shown.

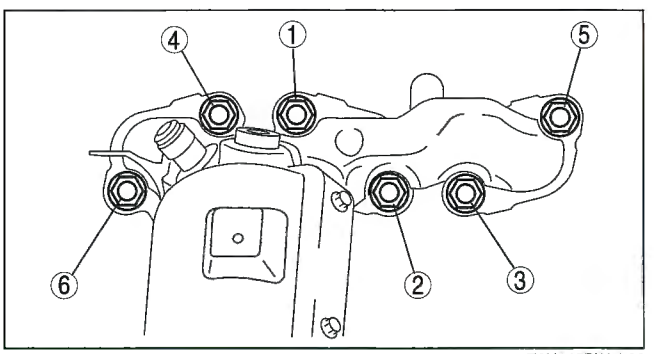

E6U115BW5L02

01–16A EMISSION SYSTEM [L3, AJ]

EVAPORATIVE EMISSION (EVAP) CONTROL SYSTEM LOCATION INDEX [L3, AJ] 01–16A–2
Engine Room Side 01–16A–2
Fuel Tank Side 01–16A–3
EVAPORATIVE EMISSION (EVAP) CONTROL SYSTEM DIAGRAM [L3, AJ] 01–16A–4
EVAPORATIVE EMISSION (EVAP) CONTROL SYSTEM COMPONENT REMOVAL/INSTALLATION [L3, AJ] 01–16A–5
Engine Room Side 01–16A–5
Purge Solenoid Valve Installation Note 01–16A–6
Fuel Tank Side 01–16A–6
Charcoal Canister Removal Note 01–16A–7
Charcoal Canister Installation Note 01–16A–7
Evaporative Hose Removal Note (Type A) 01–16A–7
Evaporative Hose Removal Note (Type B) 01–16A–8
Evaporative Hose Installation Note 01–16A–9
FUEL-FILLER CAP INSPECTION [L3, AJ] 01–16A–9
Leakage Inspection 01–16A–9
AIR FILTER INSPECTION [L3, AJ] 01–16A–10
CHARCOAL CANISTER INSPECTION [L3, AJ] 01–16A–10
EVAPORATIVE EMISSION (EVAP) SYSTEM LEAK DETECTION PUMP INSPECTION [L3, AJ] 01–16A–11
Airflow Inspection 01–16A–11
Resistance Inspection 01–16A–11
Circuit Open/Short Inspection [L3] 01–16A–12
Circuit Open/Short Inspection [AJ] 01–16A–13
PURGE SOLENOID VALVE INSPECTION [L3, AJ] 01–16A–13
Airflow Inspection 01–16A–13
Circuit Open/Short Inspection [L3] 01–16A–14
Circuit Open/Short Inspection [AJ] 01–16A–14
EGR SYSTEM LOCATION INDEX [L3, AJ] 01–16A–15
EGR SYSTEM DIAGRAM [L3, AJ] 01–16A–16
EGR VALVE REMOVAL/INSTALLATION [L3] 01–16A–16
Water Hose Removal Note 01–16A–17
EGR Valve Removal Note 01–16A–17
EGR VALVE REMOVAL/INSTALLATION [AJ] 01–16A–17
EGR VALVE INSPECTION [L3] 01–16A–17
Resistance Inspection 01–16A–17
Circuit Open/Short Inspection 01–16A–18
EGR VALVE INSPECTION [AJ] 01–16A–18
Resistance Inspection 01–16A–18
Circuit Open/Short Inspection 01–16A–19
EGR BOOST SENSOR SOLENOID VALVE INSPECTION [AJ] 01–16A–20
Airflow Inspection 01–16A–20
Circuit Open/Short Inspection 01–16A–20
POSITIVE CRANKCASE VENTILATION (PCV) SYSTEM AND CATALYTIC CONVERTER SYSTEM LOCATION INDEX [L3, AJ] 01–16A–21
POSITIVE CRANKCASE VENTILATION (PCV) SYSTEM FLOW DIAGRAM [L3, AJ] 01–16A–22
POSITIVE CRANKCASE VENTILATION (PCV) VALVE INSPECTION [L3] 01–16A–23
POSITIVE CRANKCASE VENTILATION (PCV) VALVE INSPECTION [AJ] 01–16A–23
WARM-UP THREE-WAY CATALYTIC CONVERTER (WU-TWC) INSPECTION [L3, AJ] 01–16A–23

EVAPORATIVE EMISSION (EVAP) CONTROL SYSTEM LOCATION INDEX [L3, AJ]

E6U011600030W01

Engine Room Side

L3 engine models

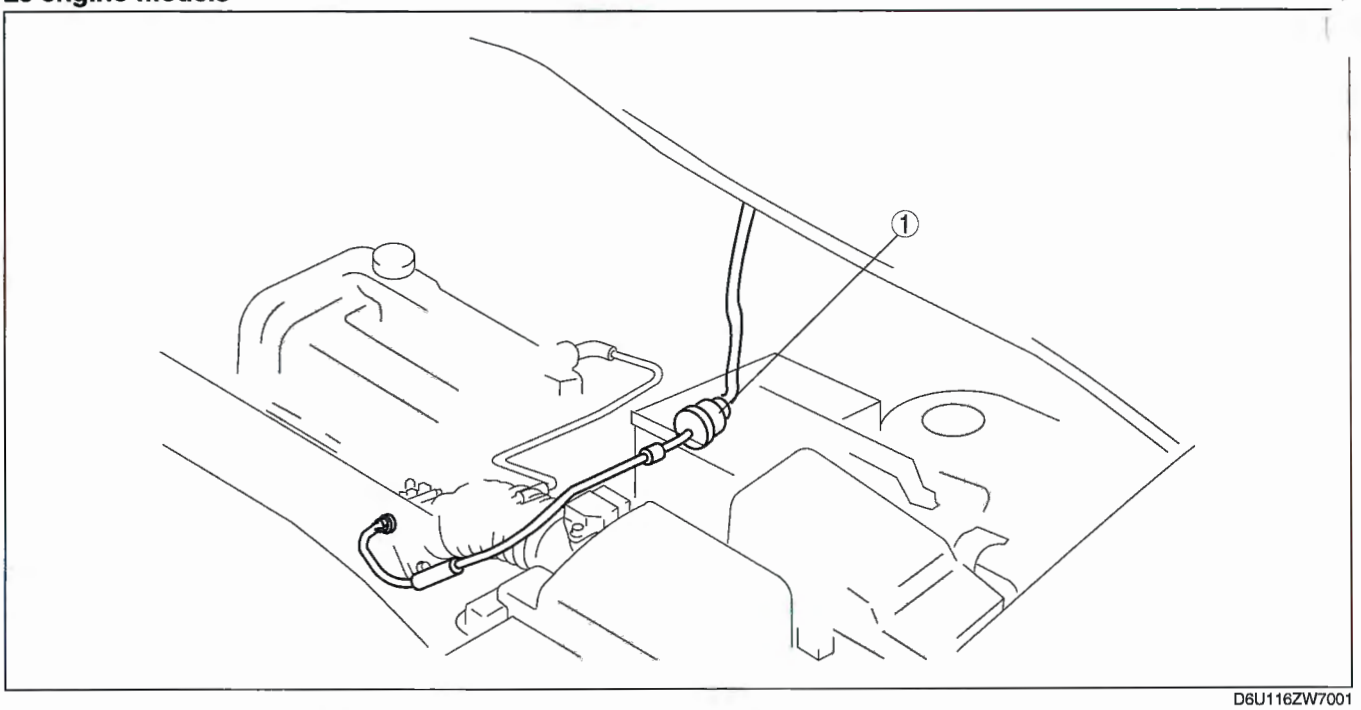

D6U116ZW7001

1	Purge solenoid valve (See 01–16A–13 PURGE SOLENOID VALVE INSPECTION [L3, AJ])

AJ engine models

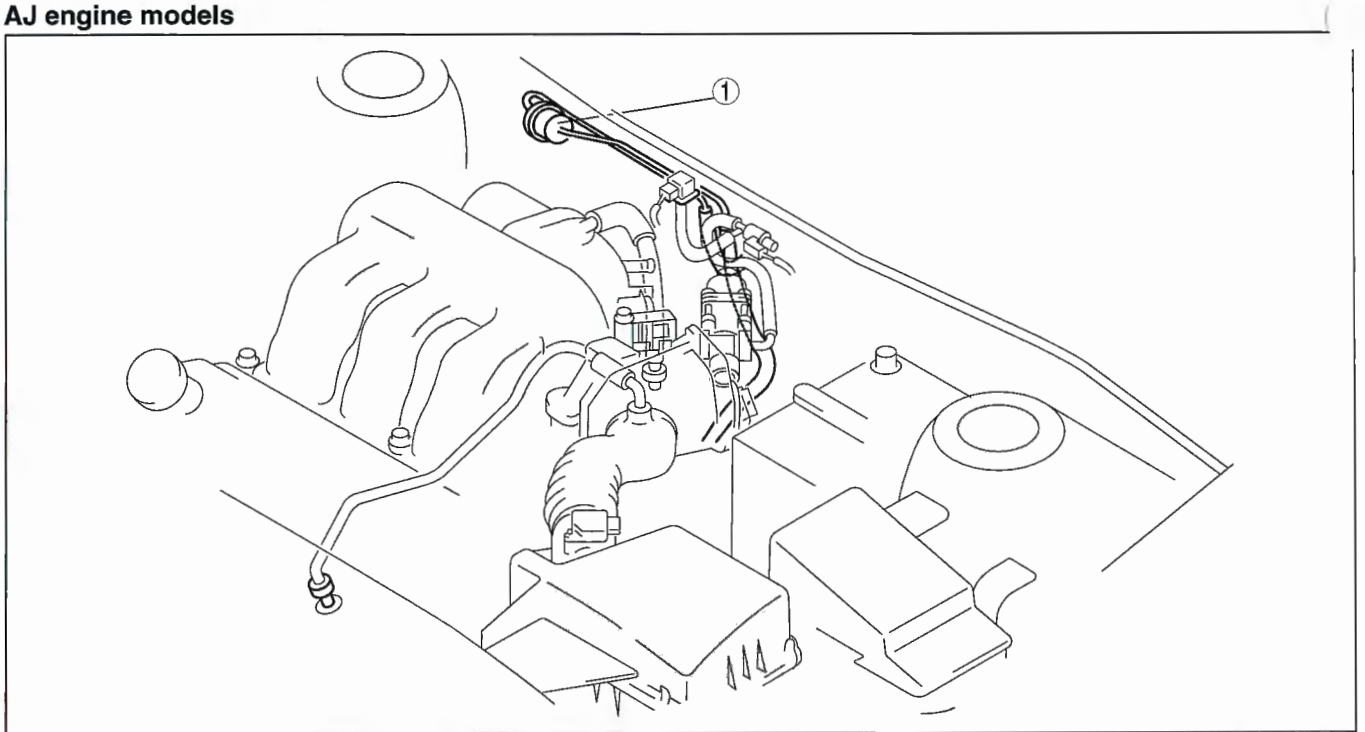

D6U116ZW7002

1	Purge solenoid valve (See 01–16A–13 PURGE SOLENOID VALVE INSPECTION [L3, AJ])

Fuel Tank Side
TYPE A

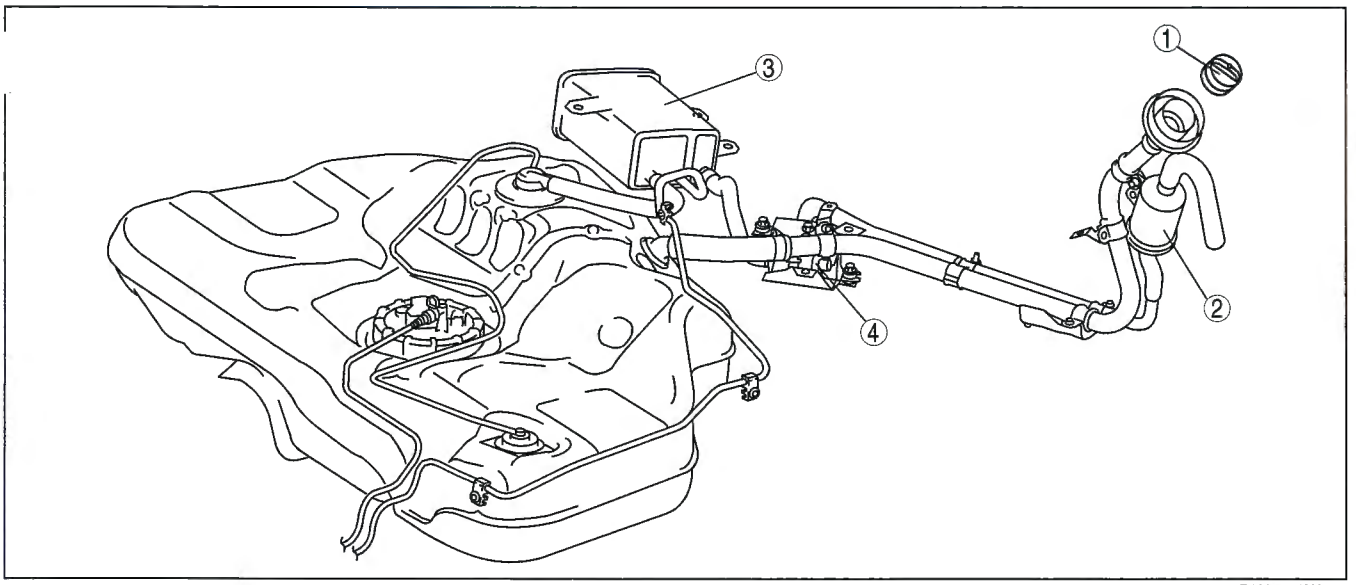

B6U0116W017

TYPE B

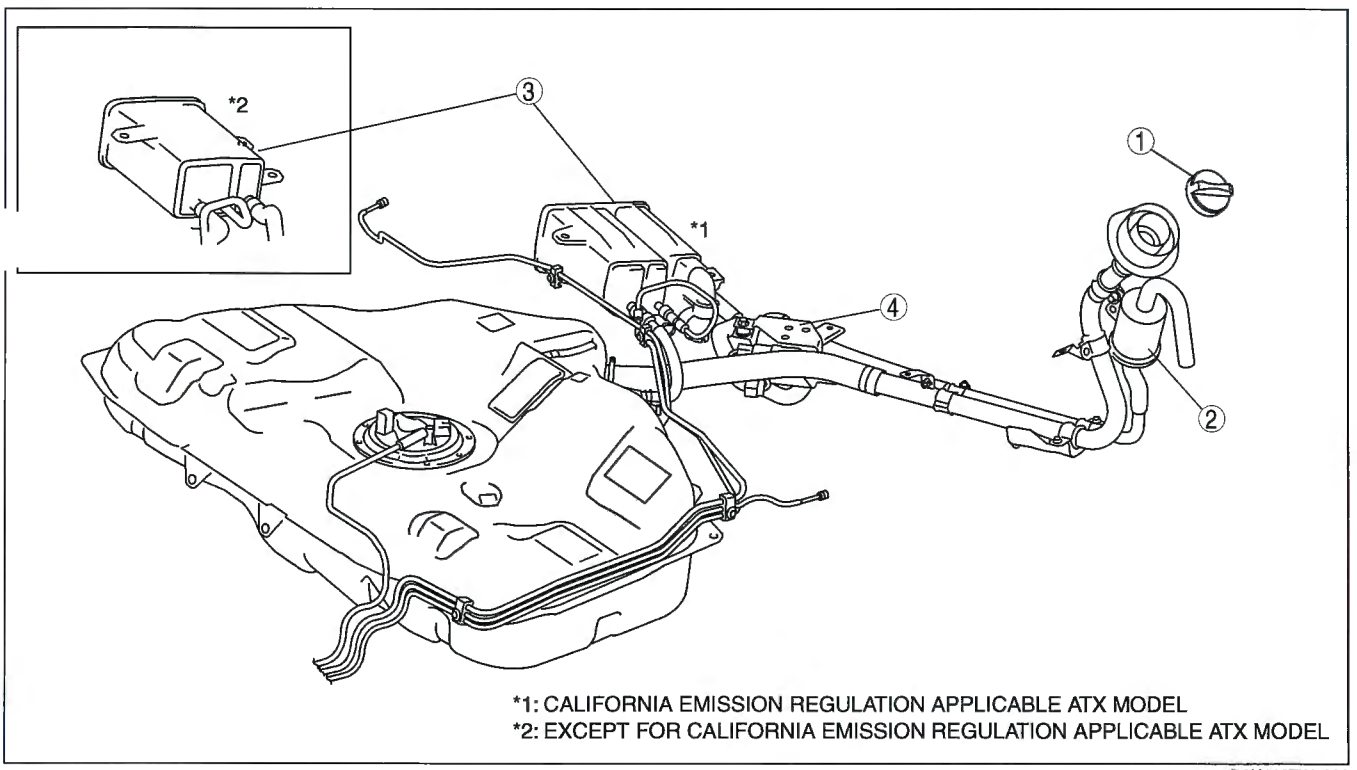

D6U116ZW7008

1	Fuel-filler cap (See 01–16A–9 FUEL-FILLER CAP INSPECTION [L3, AJ])
2	Air filter (See 01–16A–10 AIR FILTER INSPECTION [L3, AJ])

3	Charcoal canister (See 01–16A–10 CHARCOAL CANISTER INSPECTION [L3, AJ])
4	EVAP system leak detection pump (See 01–16A–11 EVAPORATIVE EMISSION (EVAP) SYSTEM LEAK DETECTION PUMP INSPECTION [L3, AJ])

TYPE A:The rollover valve is located on the external wall of the fuel tank.
TYPE B:The rollover valve is located inside the fuel tank.

EVAPORATIVE EMISSION (EVAP) CONTROL SYSTEM DIAGRAM [L3, AJ]

E6U011600030W02

L3 engine models

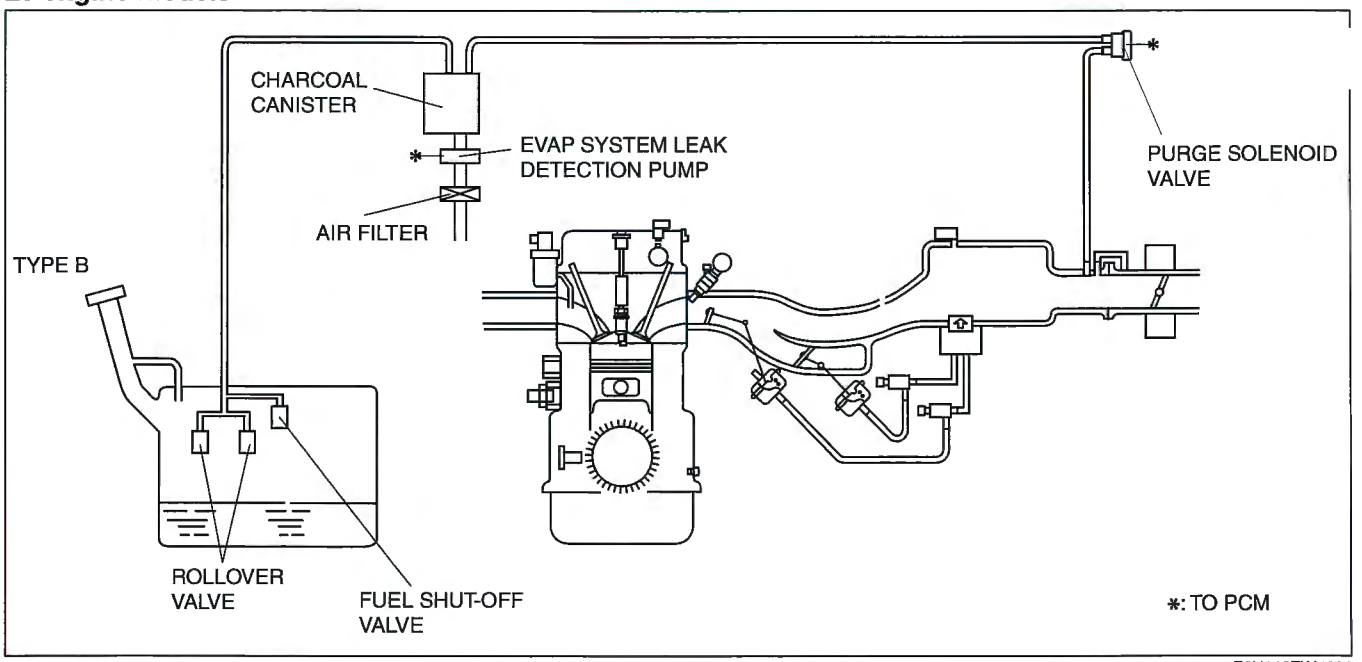

E6U116ZW5001

AJ engine models

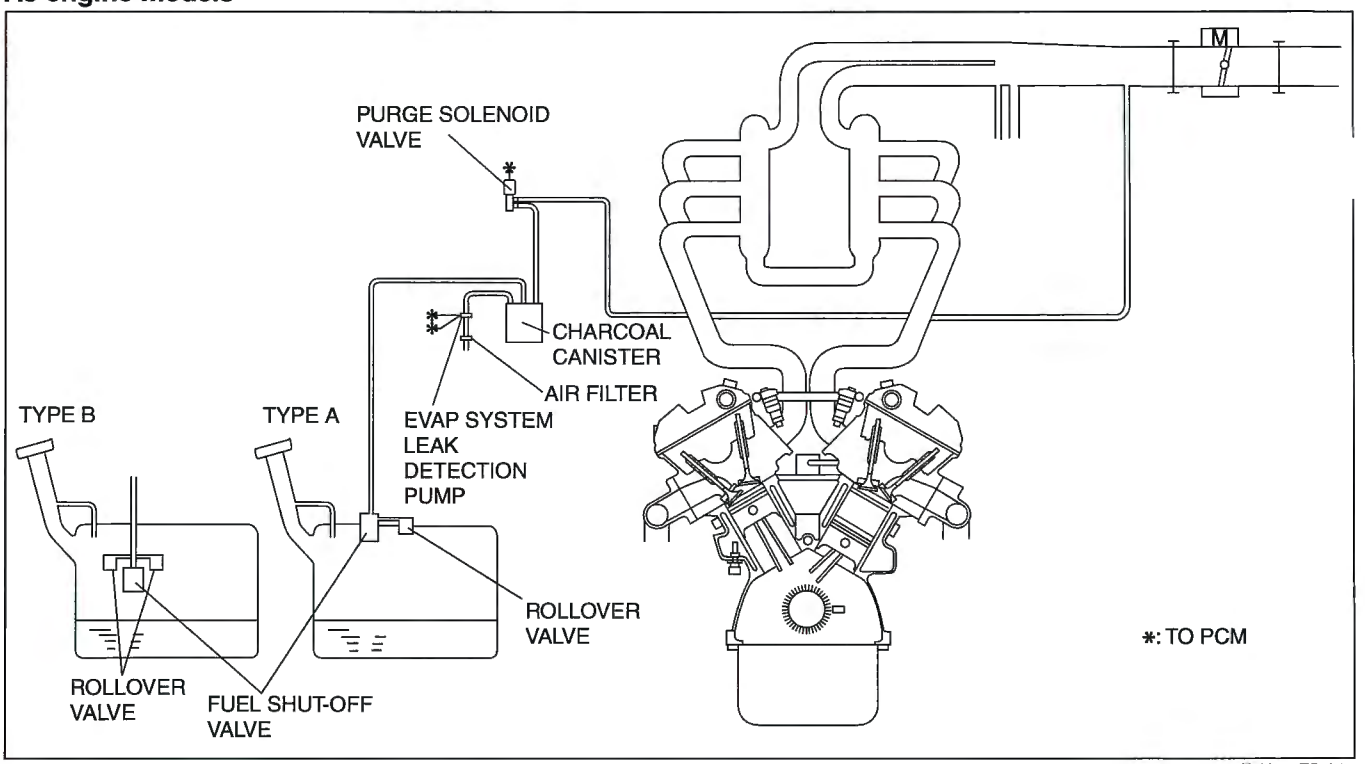

E6U116ZS5L01

TYPE A:The rollover valve is located on the external wall of the fuel tank.
TYPE B:The rollover valve is located inside the fuel tank.

EVAPORATIVE EMISSION (EVAP) CONTROL SYSTEM COMPONENT REMOVAL/INSTALLATION [L3, AJ]

E6U011600030W03

Engine Room Side

1. Remove in the order indicated in the table.
2. Install in the reverse order of removal.

L3 engine models

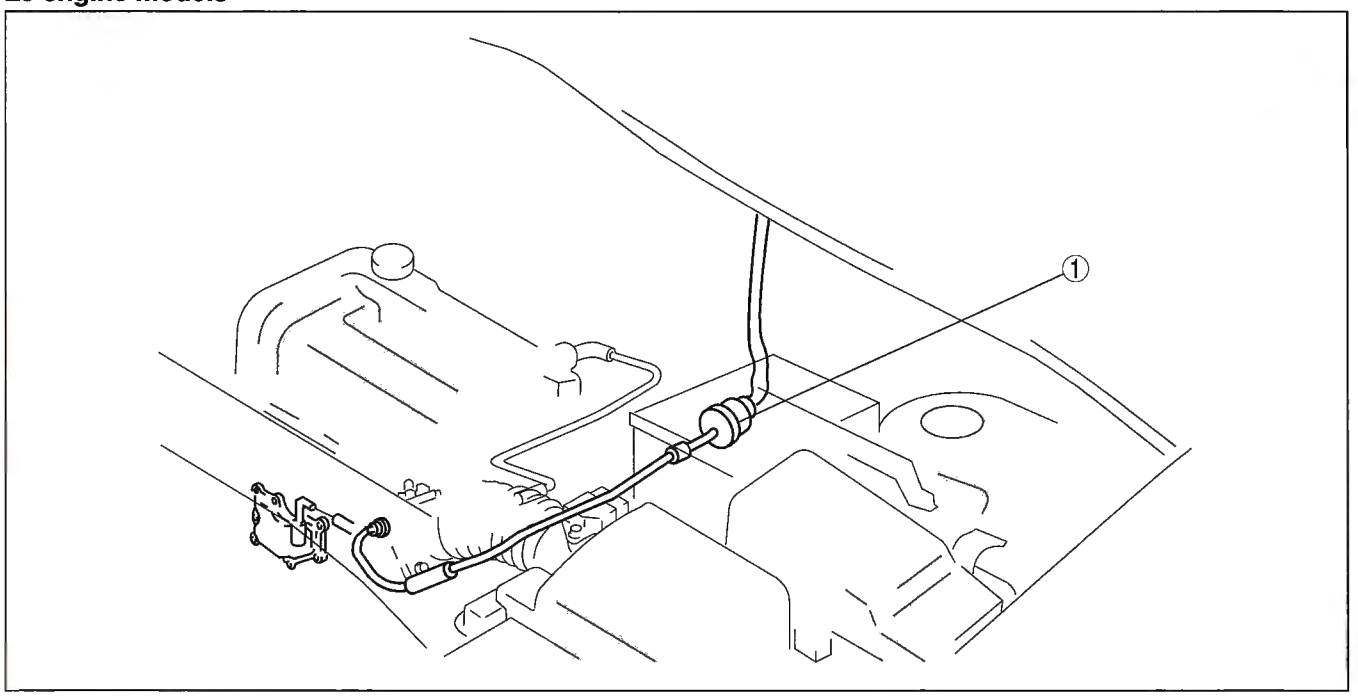

D6U116ZW7005

AJ engine models

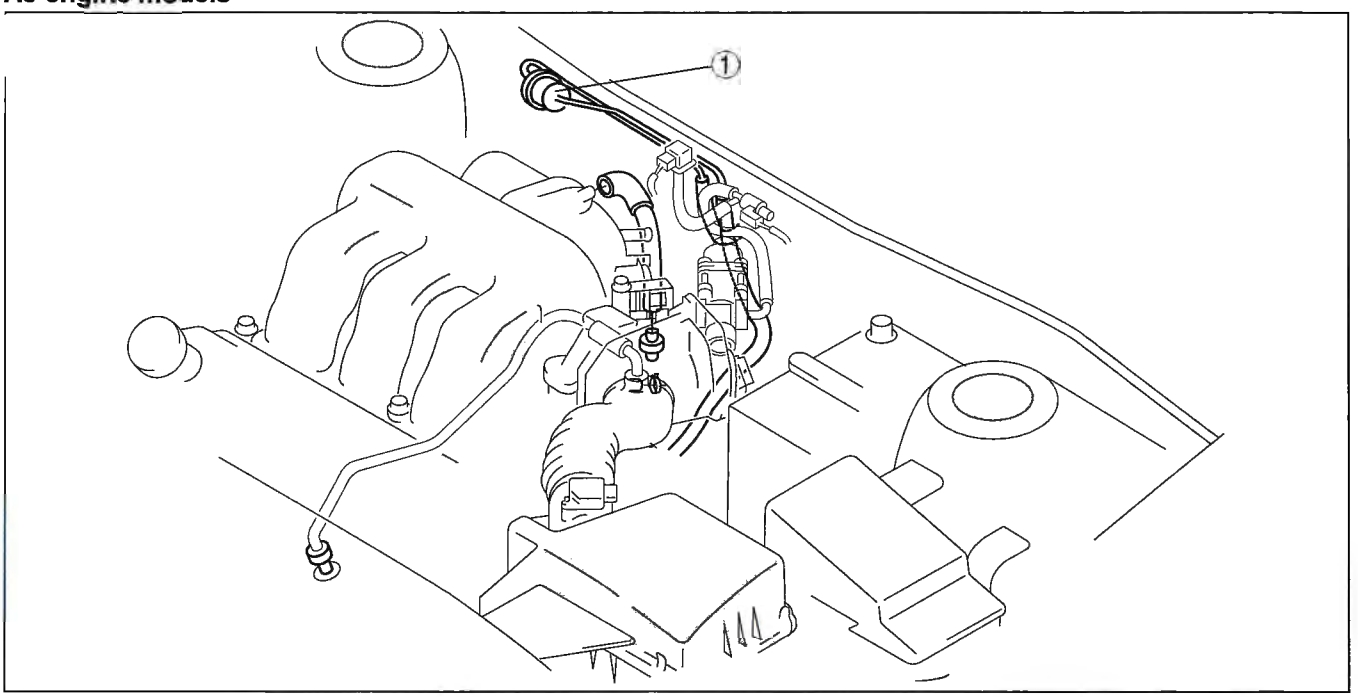

D6U116ZW7006

1	Purge solenoid valve (See 01–16A–6 Purge Solenoid Valve Installation Note)

Purge Solenoid Valve Installation Note

1. Install in the order indicated in the table.

1	Purge solenoid valve
2	Vacuum hose (See 01–16A–6 Hose (purge solenoid valve) installation note)
3	Evaporative hose (See 01–16A–6 Hose (purge solenoid valve) installation note)

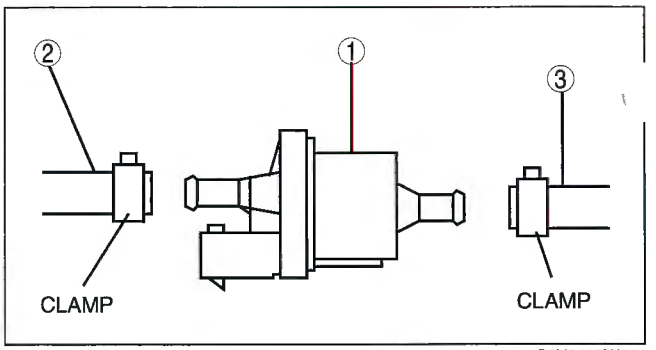

C6U0116W911

Hose (purge solenoid valve) installation note

1. Fit the vacuum hose (purge solenoid valve) onto the respective fittings, and install clamps as shown.

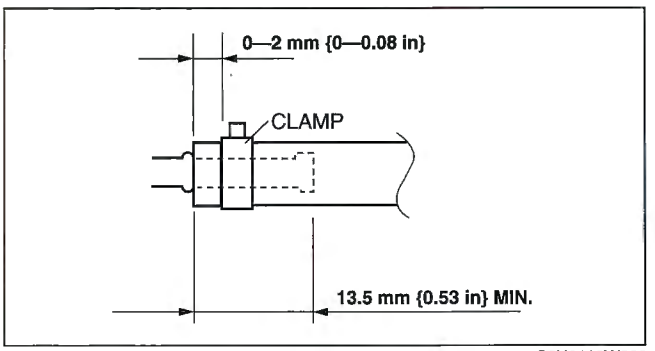

C6U0116W902

Fuel Tank Side

1. Raise the rear of the vehicle and support it with safety stands.
2. Remove in the order indicated in the table.
3. Install in the reverse order of removal.

California emission regulation applicable ATX model

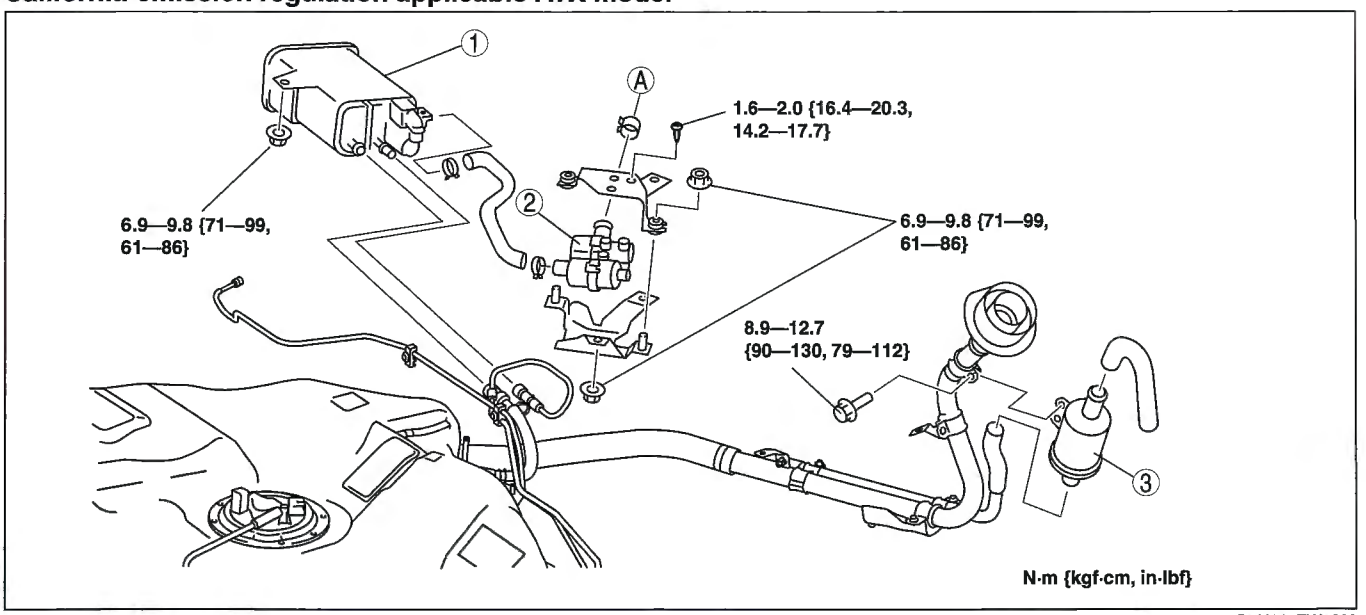

D6U116ZW7009

Except for California emission regulation applicable ATX model

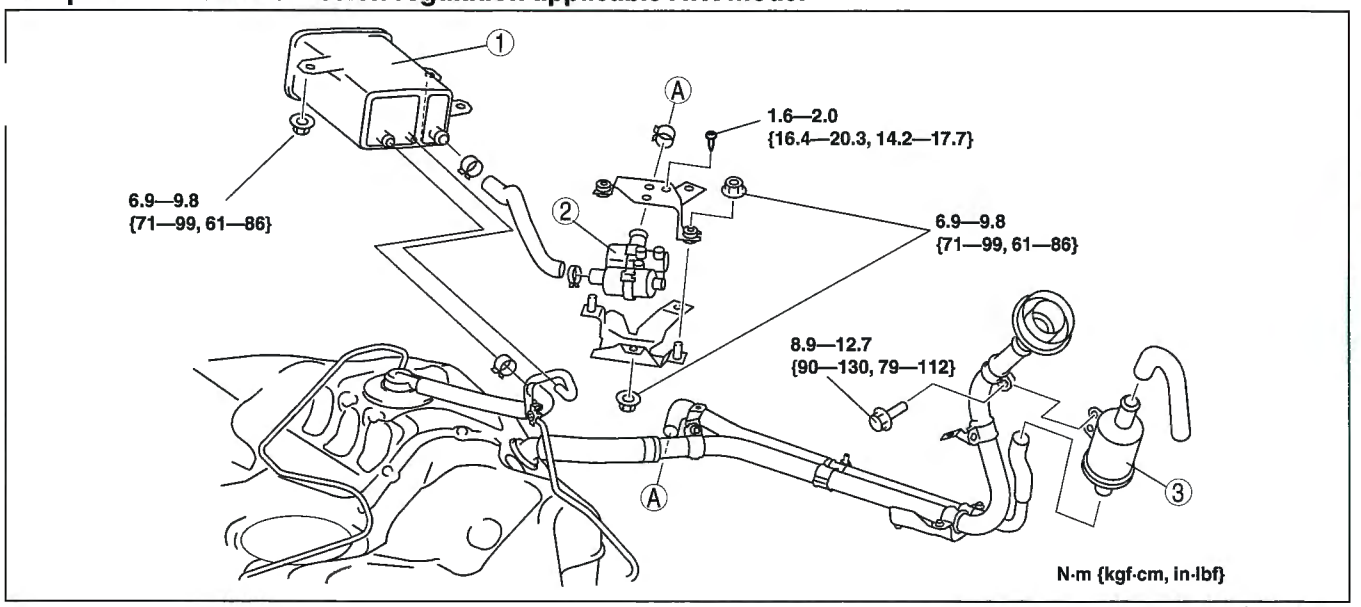

C6U0116W800

1	Charcoal canister (See 01–16A–7 Charcoal Canister Removal Note) (See 01–16A–7 Charcoal Canister Installation Note)
2	EVAP system leak detection pump
3	Air filter

Charcoal Canister Removal Note

- Refer to the "Evaporative Hose Removal Note" to disconnect the evaporative hose (to the purge solenoid valve) from the charcoal canister. (See 01–16A–7 Evaporative Hose Removal Note (Type A).)
  For California emission regulation applicable model, refer to the "Evaporative Hose Removal Note" to disconnect evaporative hose (to the fuel tank) from the charcoal canister. (See 01–16A–8 Evaporative Hose Removal Note (Type B).)

Charcoal Canister Installation Note

- Refer to the "Evaporative Hose Installation Note" to connect the evaporative hose from the charcoal canister. (See 01–16A–9 Evaporative Hose Installation Note.)

Evaporative Hose Removal Note (Type A)

Caution

- **The quick release connector may be damaged if the tab is bent excessively. Do not expand the tab over the stopper.**

1. Disconnect the quick release connector.
   (1) Push the tab on the locking coupler **90** ° until it stops.
   (2) Pull the evaporative hose straight back.

Note

- The stopper may be removed from the quick connector. Take care not to lose it. Reinstall it to the quick release connector before reconnecting the joint port.

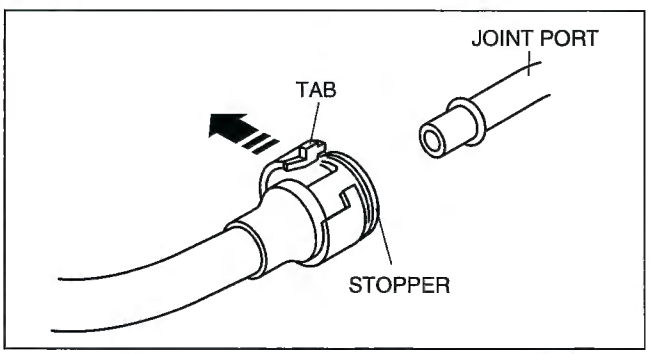

C6U0116W903

- The locking coupler has two internal locking tabs which retain the joint port. Be sure that the tab on the locking coupler is rotated until it stops to release two internal locking tabs.

2. Cover the disconnected quick release connector and joint port with vinyl sheets or the like to prevent them from being scratched or contaminated with foreign material.

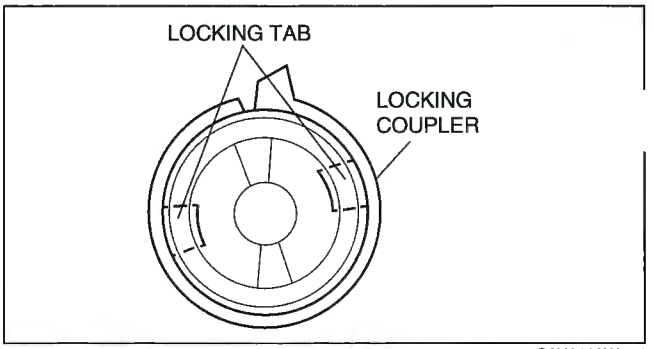

C6U0116W904

Evaporative Hose Removal Note (Type B)

Caution
- **The quick release connector may be damaged if the tab is bent excessively. Do not expand the tab over the stopper.**

1. Disconnect the quick release connector.
   (1) Push the tab on the locking coupler until it stops.
   (2) Pull the evaporative hose straight back.

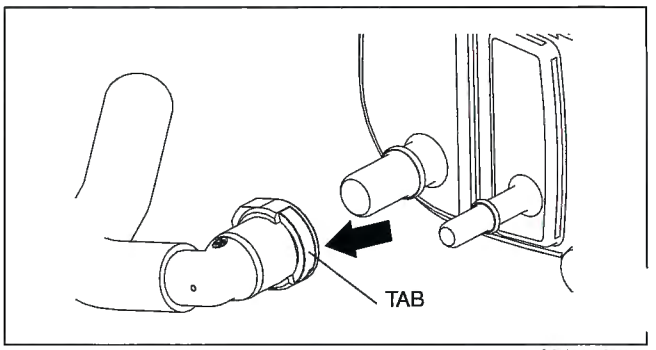

C6U0116W801

Note
- The locking coupler has the internal locking tab which retain the joint port. Be sure that the tab on the locking coupler is pushed until it stops to release the internal locking tab.

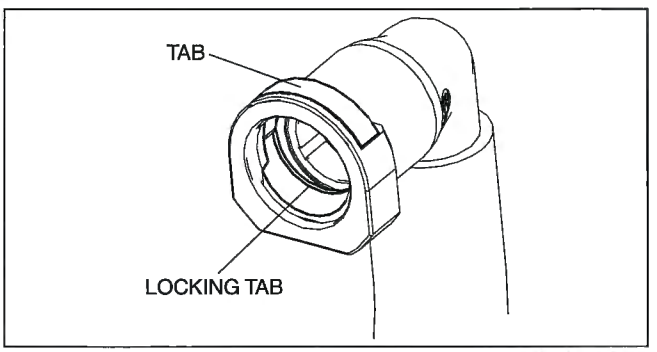

C6U0116W802

2. Cover the disconnected quick release connector and joint port with vinyl sheets or the like to prevent them from being scratched or contaminated with foreign material.

Evaporative Hose Installation Note

Note
- For type A, a checker tab is integrated with the quick release connector for new evaporative hoses. The checker tab will be released from the quick release connector after it is completely engaged with the joint port.

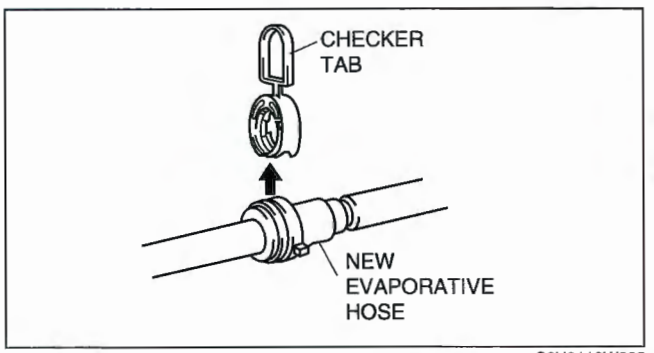

C6U0116W905

1. Inspect the joint port sealing surface for damage and deformation, and replace if necessary.
   - If the quick release connector O-ring is damaged, replace the evaporative hose.
2. Slightly apply clean engine oil to the sealing surface of the joint port.
3. Align the joint port with quick release connector so that the tabs of the retainer are correctly fitted into the quick release connector. Push the quick release connector straight into the joint port until a click is heard.
4. Lightly pull and push the quick release connector a few times by hand and verify that it can move **2.0—3.0 mm {0.08—0.11 in}** and it is connected securely.
   - If the quick release connector does not move at all, verify that O-ring is not damaged and slipped, and reconnect the quick release connector.

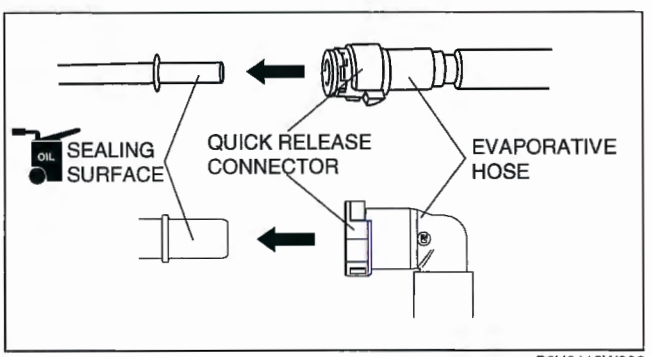

C6U0116W906

JEL-FILLER CAP INSPECTION [L3, AJ]

E6U011642250W01

Leakage Inspection

1. Perform the following **SST** (Evaporative Emission System Tester 134-01049) self-test:

Note
- If the tester does not work correctly during self-test, refer to the tester operators manual for more detailed procedures.

(1) Verify the gas cylinder valve is closed and the control valve located on the tester is in the TEST position. All tester display should be off at this time.
(2) Connect the long hose (part of **SST**) to the tester.
(3) Connect the manifold assembly (part of **SST**) to the long hose as shown.
(4) Open the gas cylinder valve and verify the gas cylinder regulator left gauge reads **10 to 12 psi** (preset at factory).
   - If not, refer to the tester operators manual to contact tester manufacturer.
(5) Press the ON/OFF switch to turn on the **SST** and make sure the left display reads **0.0**.
(6) Turn the control valve on the tester to the FILL position.
(7) Verify the left display reading is **within 13.9 to 14.0 in of water.**
   - If not, adjust the pressure using the regulator knob located on the right side of the tester.
(8) Turn the control valve to TEST position and press the START switch.
(9) After the **2-min** countdown (left display) is completed, the right display shows the total pressure loss for that period. A **0.5 in** of water loss is acceptable on the self-test.
   - If the loss is **more than 0.5 in** of water, do one or more self-test. If the failed test repeats, check for leak using the ultrasonic leak detector (part of **SST**).

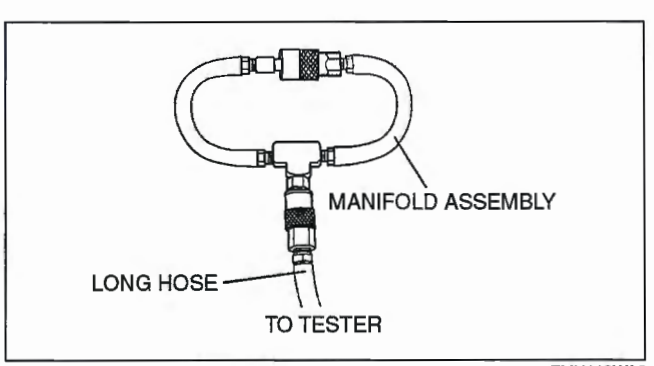

ZMU116WA6

2. Press the RESET switch to set the left display reading to **0.0**.

3. Connect the fuel cap receiver assembly (part of **SST**) to the manifold assembly and fuel-filler cap from the vehicle.
   - If the fuel-filler cap is not a genuine part, replace it.
4. Turn the control valve to the FILL position.
5. Wait (**maximum 20 s**) until the left display reads **13.9 to 14 in of water.**
   - If the reading is slightly below the specification, adjust it using the regulator knob.
   - If the reading is far below, the fuel-filler cap has leak. Replace it.
6. Turn the control valve to the TEST position and press the START switch.
7. After the **2-min** countdown (left display) is completed, check the test result (the failed/passed light on the tester).
   - If the green light turns on, the fuel-filler cap is OK.
   - If the red light turns on, the fuel-filler cap has leakage. Replace it.
8. Close the gas cylinder valve.
9. Turn the control valve to the FILL position.
10. Press the ON/OFF switch to turn off the tester.

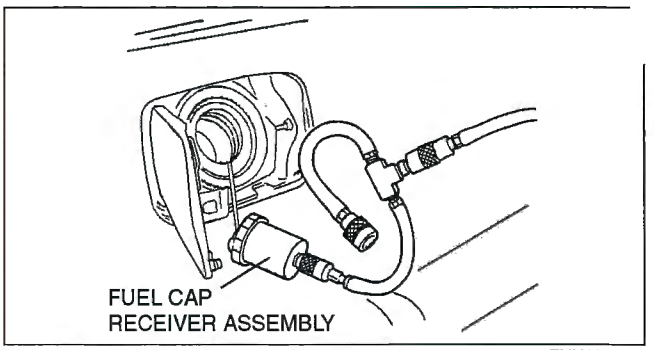

ZMU116WA7

AIR FILTER INSPECTION [L3, AJ]

E6U011613988W01

1. Remove the air filter.
2. Blow from port A and verify that there is airflow from port B.
   - If not as specified, replace the air filter.
3. Blow from port B and verify that there is airflow from port A.
   - If not as specified, replace the air filter.

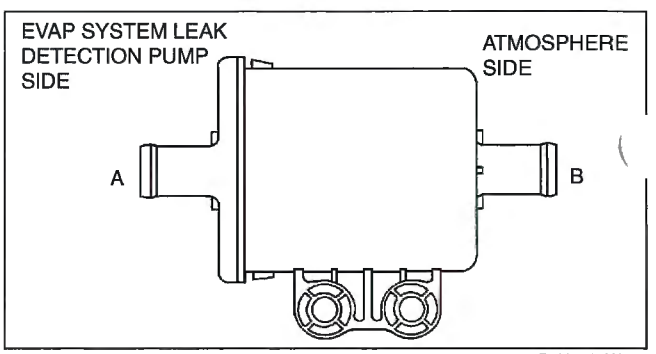

B6U0116W004

CHARCOAL CANISTER INSPECTION [L3, AJ]

E6U011613970W01

1. Remove the charcoal canister. (See 01–16A–5 EVAPORATIVE EMISSION (EVAP) CONTROL SYSTEM COMPONENT REMOVAL/INSTALLATION [L3, AJ].)
2. Plug ports A and C, then blow air into port B.

Caution
- **Do not apply the pressure more than 20 kPa {0.2 kgf/cm^2, 2.8 psi} to the charcoal canister. Doing so will damage the charcoal canister.**

3. Verify that there is no air leakage from the case.
   - If not as specified, replace the charcoal canister.

California emission regulation applicable ATX model

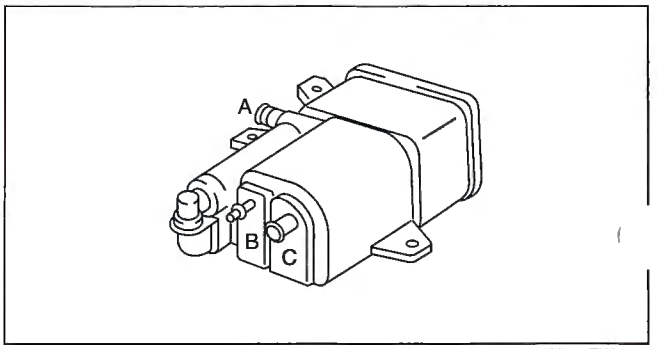

D6U116ZW7010

Except for California emission regulation applicable ATX model

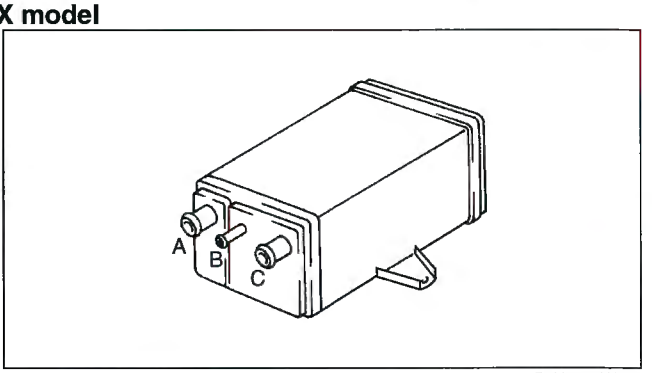

B6U0116W005

EVAPORATIVE EMISSION (EVAP) SYSTEM LEAK DETECTION PUMP INSPECTION [L3, AJ]

E6U011618581W01

Airflow Inspection

Note
- Perform the following test only when directed.

1. Disconnect the negative battery cable.
2. Remove the EVAP system leak detection pump. (See 01–16A–5 EVAPORATIVE EMISSION (EVAP) CONTROL SYSTEM COMPONENT REMOVAL/INSTALLATION [L3, AJ].)
3. Blow air into port A and verify that there is airflow from port B.
   - If not as specified, replace the EVAP system leak detection pump.
4. Blow air into port B and verify that there is airflow from port A.
   - If not as specified, replace the EVAP system leak detection pump.
   - If as specified, perform the following "Resistance Inspection".

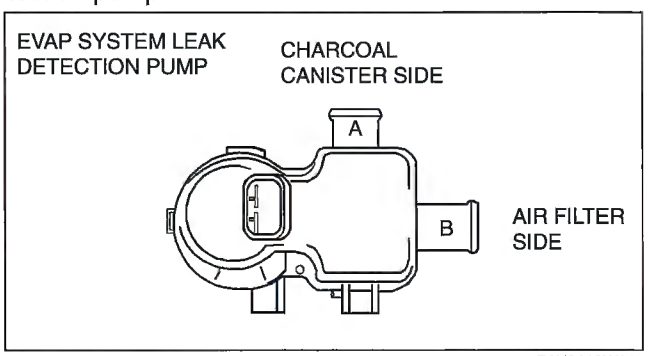

B6U0116W006

Resistance Inspection

Note
- Perform the following procedure only when directed.

1. Disconnect the negative battery cable.
2. Inspect resistance of the EVAP system leak detection pump.
   - If not as specified, replace the EVAP system leak detection pump.
   - If as specified, carry out the "Circuit Open/Short Inspection".

Terminals	Resistance (ohm)
A—B	20—50
A—C	26.6—32.4
A—D	MAX. 118

L3 engine models

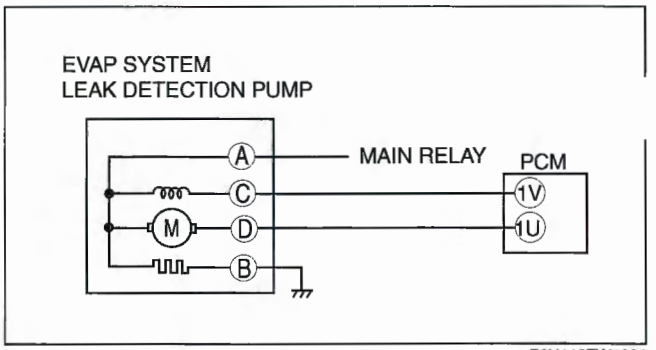

E6U116ZW5002

AJ engine models

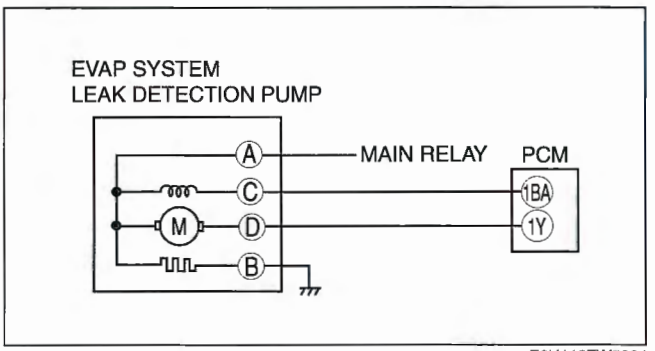

E6U116ZW5004

Circuit Open/Short Inspection [L3]

1. Disconnect the PCM connector. (See 01–40A–9 PCM REMOVAL/INSTALLATION [L3].)
2. Inspect the following wiring harnesses for open or short circuit (continuity check).

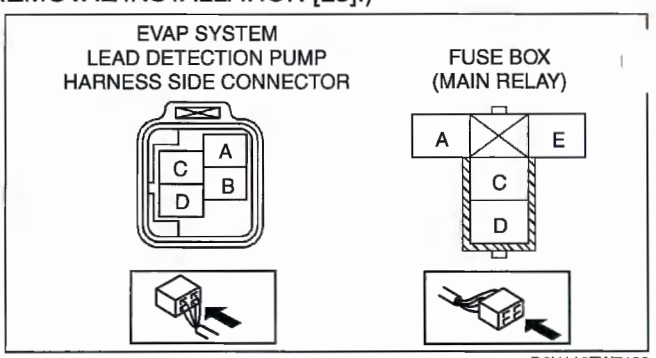

D6U116ZW7100

Open circuit

- If there is no continuity, there is an open circuit. Repair or replace the wiring harness.
  - — EVAP system leak detection pump terminal C and PCM terminal 1V
  - — EVAP system leak detection pump terminal D and PCM terminal 1U
  - — EVAP system leak detection pump terminal A and main relay terminal C
  - — EVAP system leak detection pump terminal B and the body GND

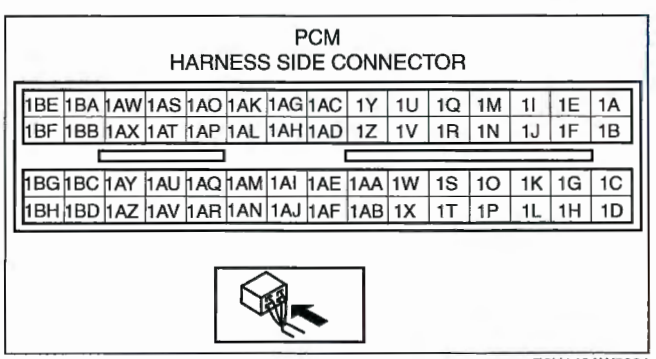

E6U140AW5991

Short circuit

- If there is continuity, there is a short circuit. Repair or replace the wiring harness.
  - — EVAP system leak detection pump terminal C and power supply
  - — EVAP system leak detection pump terminal D and power supply
  - — EVAP system leak detection pump terminal A and the body GND
  - — EVAP system leak detection pump terminal B and power supply

Circuit Open/Short Inspection [AJ]

1. Disconnect the PCM connector. (See 01–40C–5 PCM REMOVAL/INSTALLATION [AJ].)
2. Inspect the following wiring harnesses for open or short circuit (continuity check).

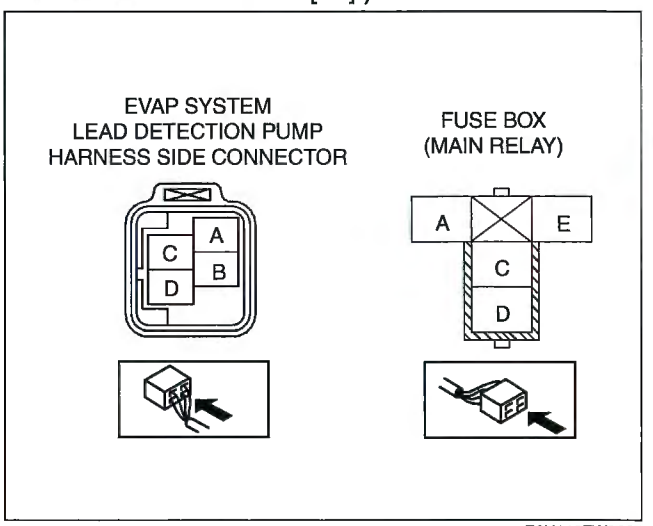

E6U116ZW5005

Open circuit

- If there is no continuity, there is an open circuit. Repair or replace the wiring harness.
  - — EVAP system leak detection pump terminal C and PCM terminal 1BA
  - — EVAP system leak detection pump terminal D and PCM terminal 1Y
  - — EVAP system leak detection pump terminal A and main relay terminal C
  - — EVAP system leak detection pump terminal B and the body GND

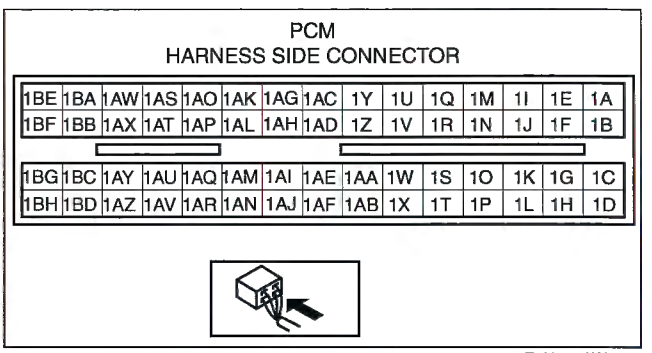

E6U140AW5991

Short circuit

- If there is continuity, there is a short circuit. Repair or replace the wiring harness.
  - — EVAP system leak detection pump terminal C and power supply
  - — EVAP system leak detection pump terminal D and power supply
  - — EVAP system leak detection pump terminal A and the body GND
  - — EVAP system leak detection pump terminal B and power supply

PURGE SOLENOID VALVE INSPECTION [L3, AJ]

E6U011618744W01

Airflow Inspection

Note

- Perform the following test only when directed.

1. Disconnect the negative battery cable.
2. Remove the purge solenoid valve. (See 01–16A–6 Purge Solenoid Valve Installation Note.)
3. Inspect airflow between the ports under the following conditions.
   - If not as specified, replace the purge solenoid valve.
   - If as specified, carry out the “Circuit Open/Short Inspection”.

O—O : Continuity O=O : Airflow

Step	Terminal		Port	
	A	B	A	B
1	O—O			
2	B+	GND	O=O	

B6U0116W014

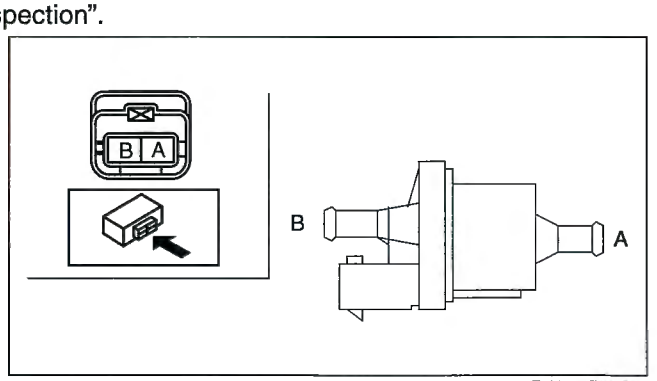

E6U116ZW5300

Circuit Open/Short Inspection [L3]

1. Disconnect the PCM connector. (See 01–40A–9 PCM REMOVAL/INSTALLATION [L3].)
2. Inspect the following wiring harnesses for open or short circuit (continuity check).

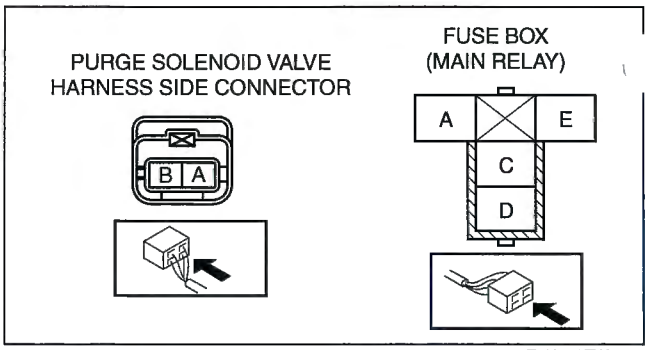

E6U116ZW5301

Open circuit

- If there is no continuity, there is an open circuit. Repair or replace the wiring harness.
  - — Purge solenoid valve terminal A and PCM terminal 2C
  - — Purge solenoid valve terminal B and main relay terminal C

Short circuit

- If there is continuity, there is a short circuit. Repair or replace the wiring harness.
  - — Purge solenoid valve terminal A and body GND
  - — Purge solenoid valve terminal B and power supply

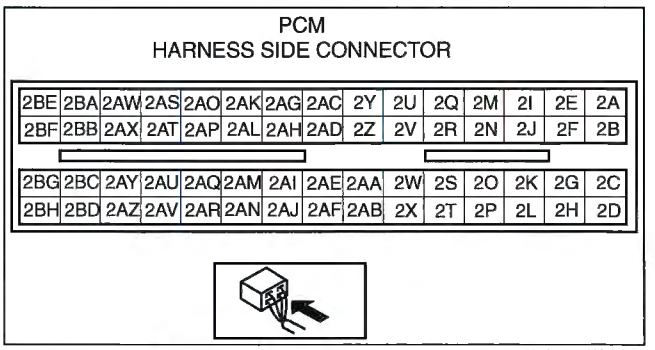

E6U140AW5992

Circuit Open/Short Inspection [AJ]

1. Disconnect the PCM connector. (See 01–40C–5 PCM REMOVAL/INSTALLATION [AJ].)
2. Inspect the following wiring harnesses for open or short circuit (continuity check).

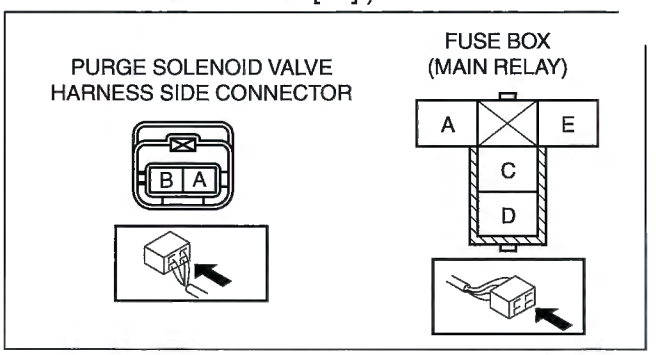

E6U116ZW5301

Open circuit

- If there is no continuity, there is an open circuit. Repair or replace the wiring harness.
  - — Purge solenoid valve terminal B and PCM terminal 1BF
  - — Purge solenoid valve terminal A and main relay terminal C

Short circuit

- If there is continuity, there is a short circuit. Repair or replace the wiring harness.
  - — Purge solenoid valve terminal B and body GND
  - — Purge solenoid valve terminal A and power supply

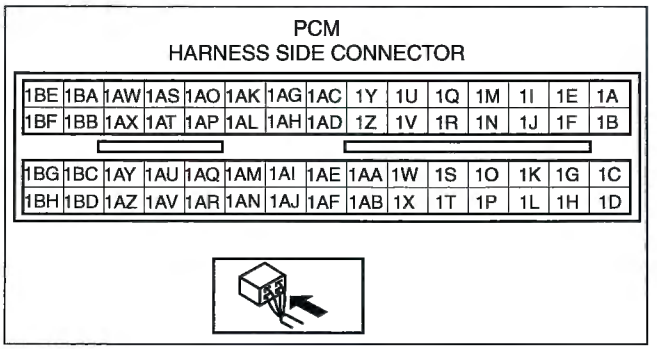

E6U140AW5991

EGR SYSTEM LOCATION INDEX [L3, AJ]

E6U011600020W01

L3 engine models

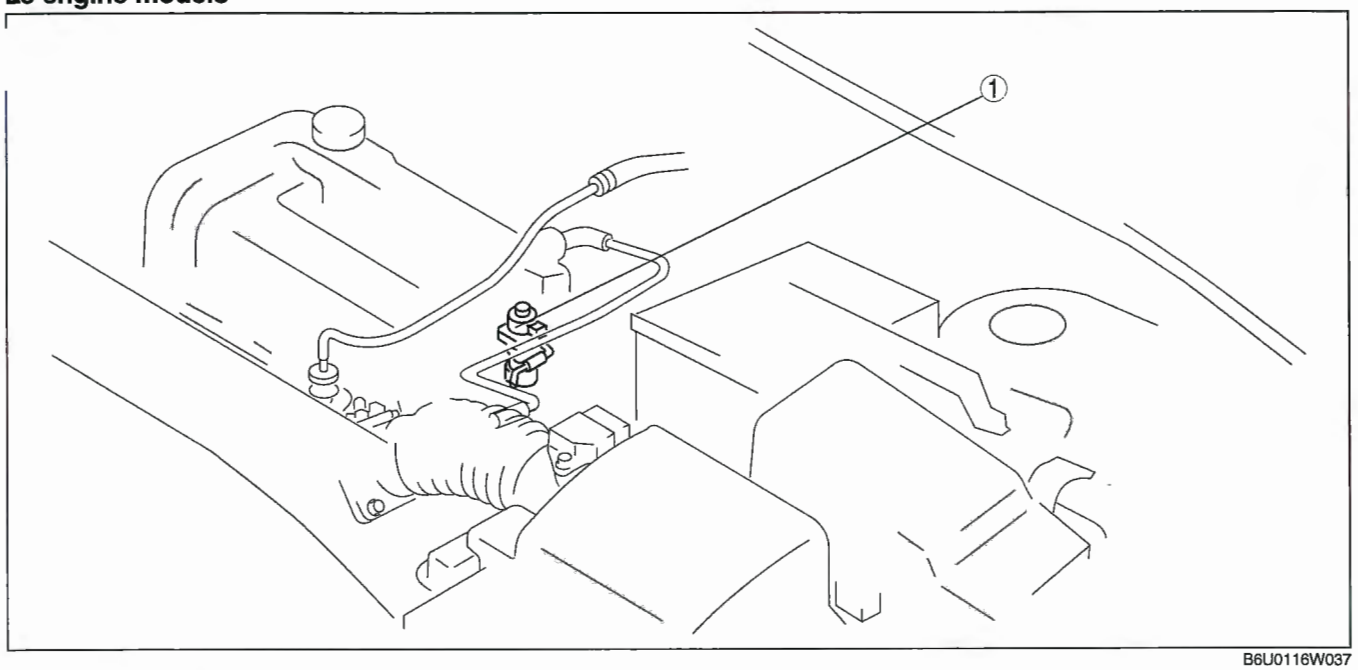

B6U0116W037

AJ engine models

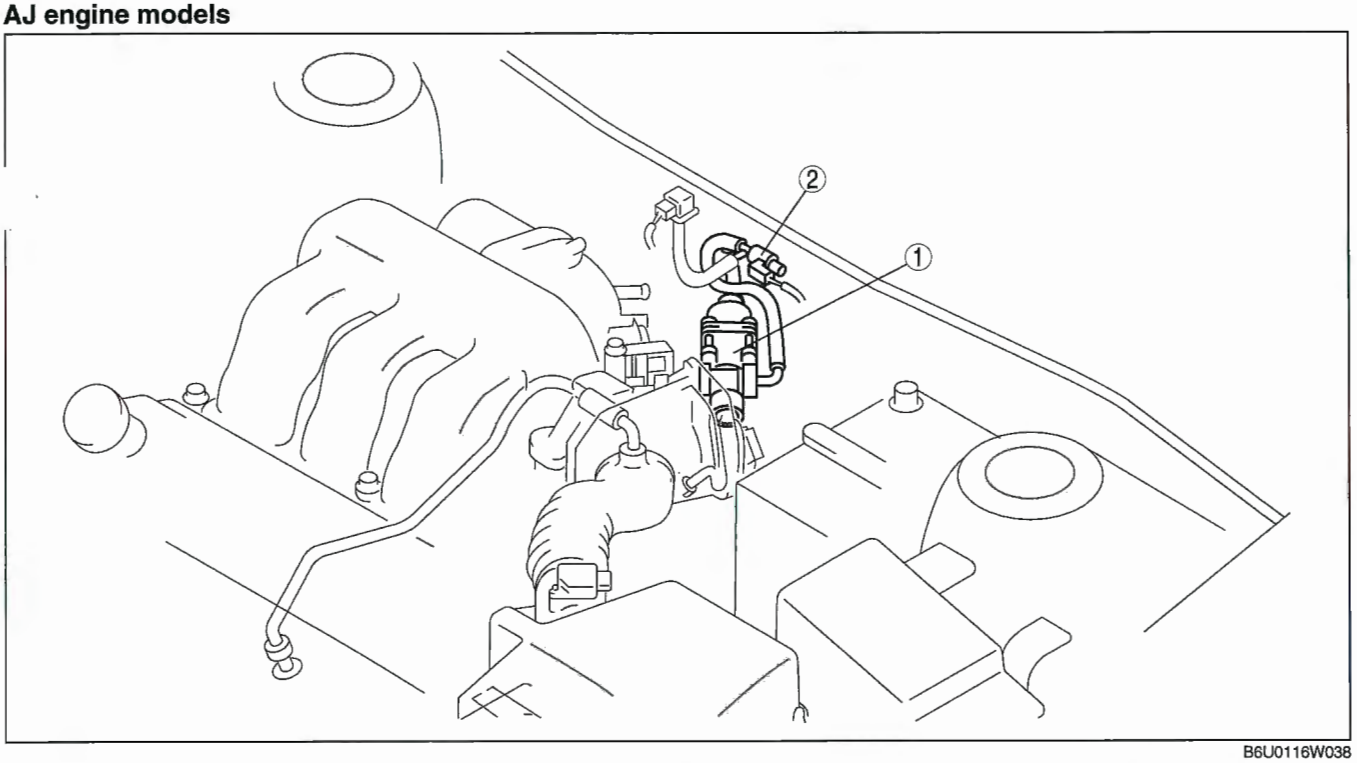

B6U0116W038

1	EGR valve (See 01–16A–16 EGR VALVE REMOVAL/ INSTALLATION [L3]) (See 01–16A–17 EGR VALVE REMOVAL/ INSTALLATION [AJ] (See 01–16A–17 EGR VALVE INSPECTION [L3]) (See 01–16A–18 EGR VALVE INSPECTION [AJ])

2	EGR boost sensor solenoid valve (See 01–16A–20 EGR BOOST SENSOR SOLENOID VALVE INSPECTION [AJ])

EGR SYSTEM DIAGRAM [L3, AJ]

E6U011600020W02

L3 engine models

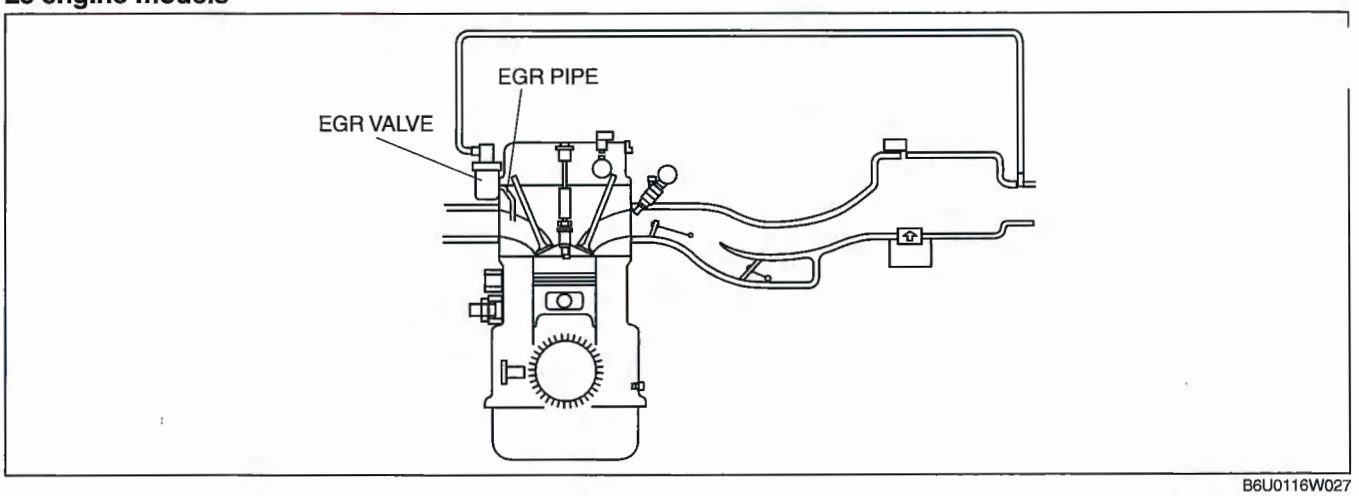

B6U0116W027

AJ engine models

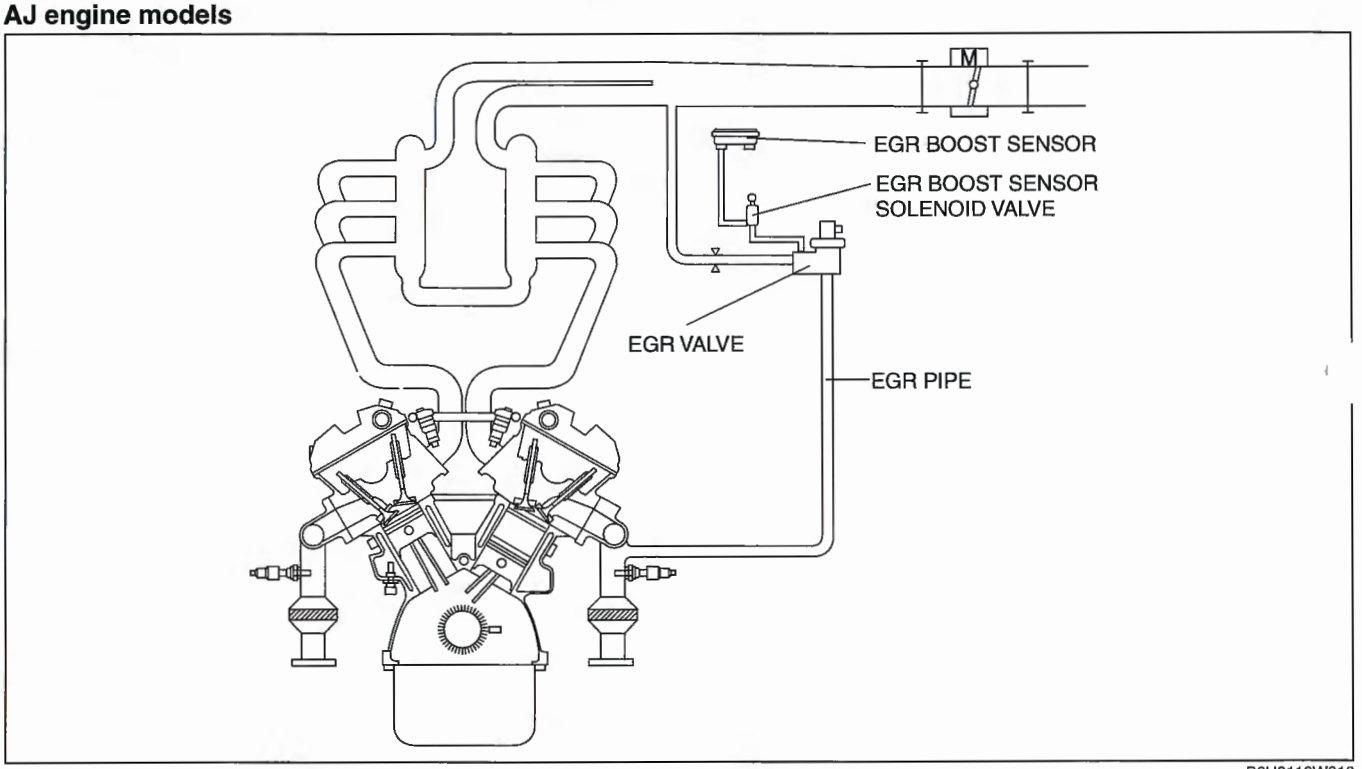

B6U0116W018

EGR VALVE REMOVAL/INSTALLATION [L3]

E6U011620300W01

1. Disconnect the negative battery cable.
2. Disconnect the EGR valve connector.
3. Remove in the order indicated in the table.

1	Water hose (See 01–16A–17 Water Hose Removal Note)
2	EGR valve (See 01–16A–17 EGR Valve Removal Note)

4. Install in the reverse order of removal.

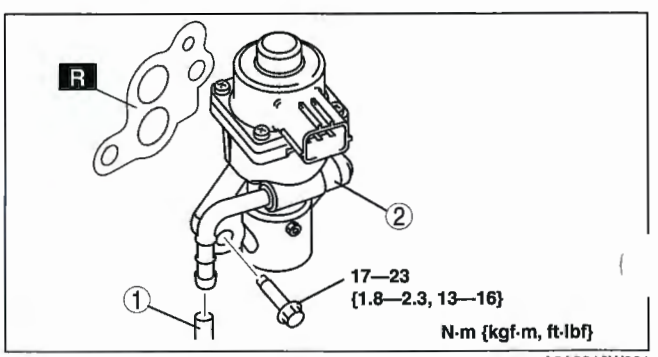

A6A3916W001

Water Hose Removal Note
- Drain the engine coolant. (See 01–12A–5 ENGINE COOLANT REPLACEMENT [L3, AJ].)

EGR Valve Removal Note
1. Remove the air hose. (See 01–13A–4 INTAKE AIR SYSTEM REMOVAL/INSTALLATION [L3])
2. Remove the upper radiator hose. (See 01–12A–8 RADIATOR REMOVAL/INSTALLATION [L3, AJ].)

EGR VALVE REMOVAL/INSTALLATION [AJ]

E6U011620300W02

1. Disconnect the negative battery cable.
2. Disconnect the vacuum hose.
3. Disconnect the EGR pipe.
4. Remove in the order indicated in the table.

1	EGR valve connector
2	EGR valve

5. Install in the reverse order of removal.

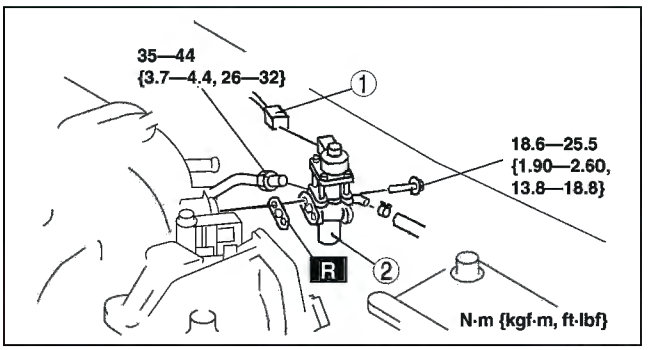

B6U0116W029

EGR VALVE INSPECTION [L3]

E6U011620300W03

Resistance Inspection

Note
- Perform the following test only when directed.

1. Disconnect the negative battery cable.
2. Inspect resistance of the EGR valve coils.
   - If not as specified, replace the EGR valve.
   - If as specified, carry out the "Circuit Open/Short Inspection".

Terminals	Resistance (ohm)
C—E C—A D—B D—F	12—16

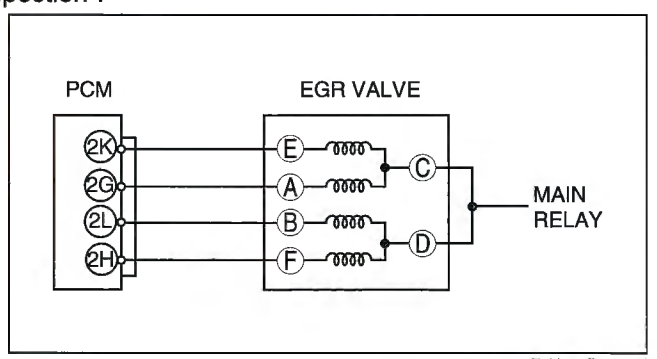

E6U116ZW5003

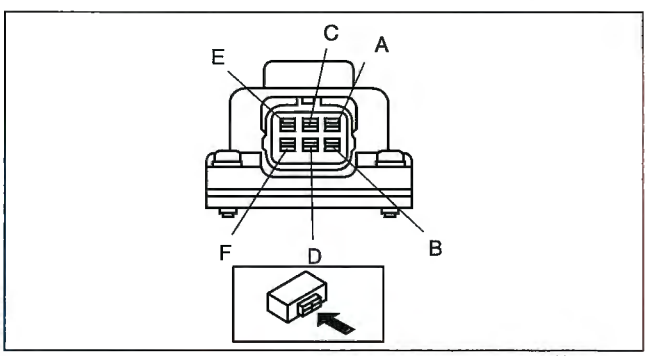

B6U0116W032

Circuit Open/Short Inspection

1. Disconnect the PCM connector. (See 01–40A–9 PCM REMOVAL/INSTALLATION [L3].)
2. Inspect the following wiring harnesses for open or short circuit (continuity check).

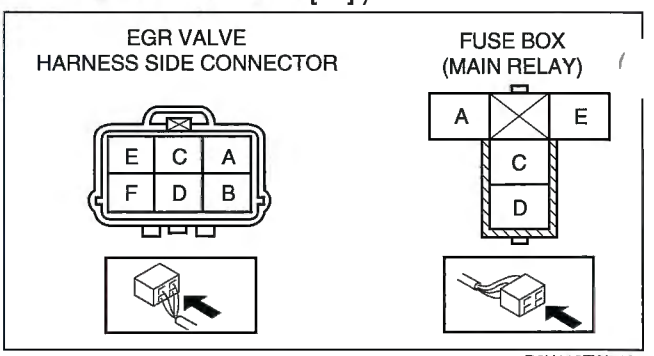

D6U116ZW7105

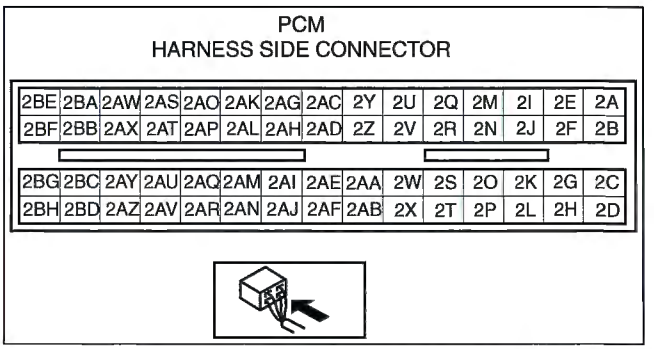

E6U140AW5992

Open circuit

- If there is no continuity, there is an open circuit. Repair or replace the wiring harness.
  - — EGR valve terminal E and PCM terminal 2K
  - — EGR valve terminal A and PCM terminal 2G
  - — EGR valve terminal B and PCM terminal 2L
  - — EGR valve terminal F and PCM terminal 2H
  - — EGR valve terminal C or D and main relay terminal C

Short circuit

- If there is continuity, there is a short circuit. Repair or replace the wiring harness.
  - — EGR valve terminal E and GND
  - — EGR valve terminal A and GND
  - — EGR valve terminal B and GND
  - — EGR valve terminal F and GND
  - — EGR valve terminal C or D and power supply

3. Remove the EGR valve, and inspect for any damage or clogging.
   - If there is no damage or no clogging, replace the EGR valve.

EGR VALVE INSPECTION [AJ]

E6U011620300W04

Resistance Inspection

Note

- Perform the following test only when directed.

1. Disconnect the negative battery cable.

2. Inspect resistance of the EGR valve coils.
   - If not as specified, replace the EGR valve.
   - If as specified, carry out the "Circuit Open/Short Inspection".

Terminals	Resistance (ohm)
C—E C—A D—B D—F	Approx. 22

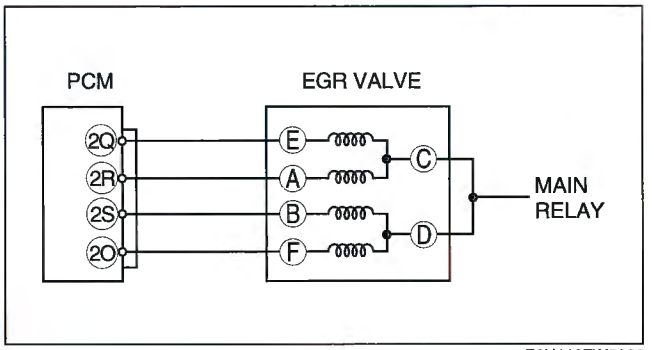

E6U116ZW5006

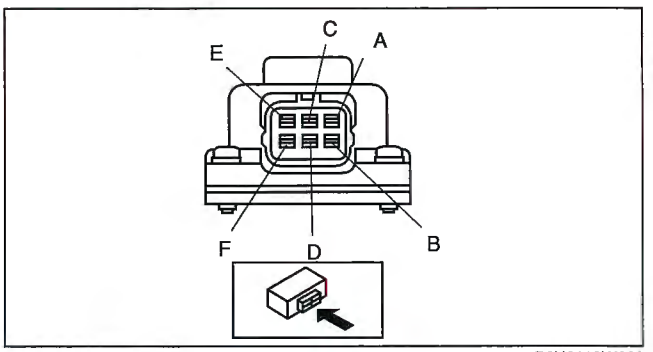

B6U0116W032

Circuit Open/Short Inspection

1. Disconnect the PCM connector. (See 01–40C–5 PCM REMOVAL/INSTALLATION [AJ].)
2. Inspect the following wiring harness for open or short circuit (continuity check).

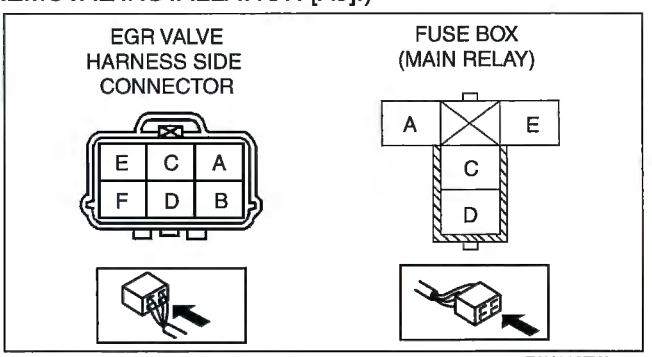

E6U116ZW5007

Open circuit

- If there is no continuity, there is an open circuit. Repair or replace the wiring harness.
  - — EGR valve terminal E and PCM terminal 2Q
  - — EGR valve terminal A and PCM terminal 2R
  - — EGR valve terminal B and PCM terminal 2S
  - — EGR valve terminal F and PCM terminal 2O
  - — EGR valve terminal C or D and main relay terminal C

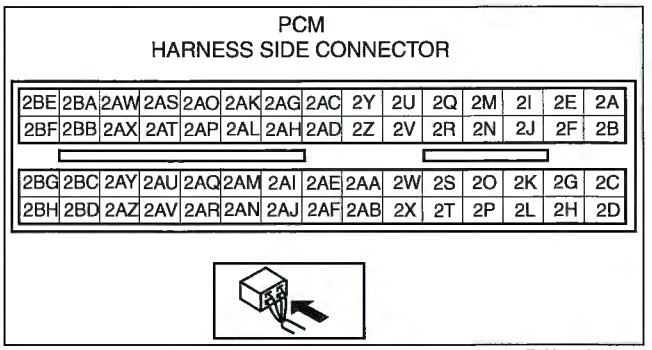

E6U140AW5992

Short circuit

- If there is continuity, there is a short circuit. Repair or replace the wiring harness.
  - — EGR valve terminal E and GND
  - — EGR valve terminal A and GND
  - — EGR valve terminal B and GND
  - — EGR valve terminal F and GND
  - — EGR valve terminal C or D and power supply

3. Remove the EGR valve, and inspect for any damage or clogging.
   - If there is no damage or no clogging, replace the EGR valve.

EGR BOOST SENSOR SOLENOID VALVE INSPECTION [AJ]

E6U011618742W01

Airflow Inspection

Note
- Perform the following procedure only when directed.

1. Disconnect the negative battery cable.
2. Remove the EGR boost sensor solenoid valve.
3. Inspect airflow between each port under the following conditions.
   - If not as specified, replace the EGR boost sensor solenoid valve.
   - If as specified, carry out the "Circuit Open/Short Inspection".

O—O : Continuity O═O : Airflow

Step	Terminal		Port		
	A	B	A	B	C
1	O—O			O═O	
2	B+	GND	O═O		

X3U116WCB

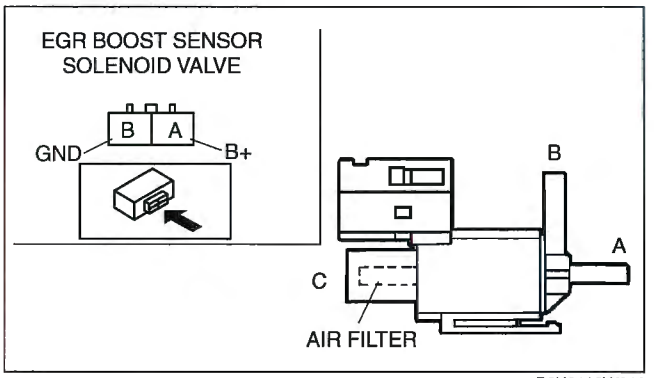

B6U0116W019

Circuit Open/Short Inspection

1. Disconnect the PCM connector. (See 01–40C–5 PCM REMOVAL/INSTALLATION [AJ].)
2. Inspect the following wiring harnesses for open or short circuit (Continuity check).

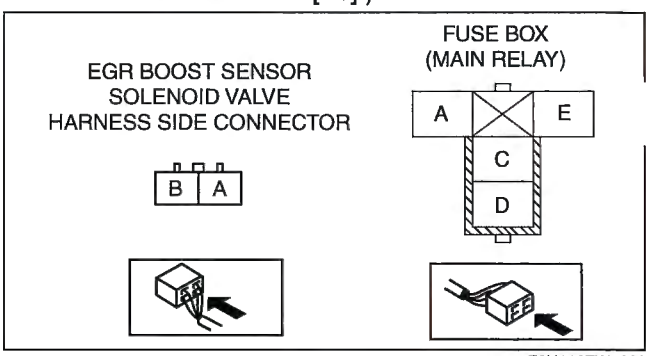

E6U116ZW5008

Open circuit
- If there is no continuity, there is an open circuit. Repair or replace the wiring harness.
  - — EGR boost sensor solenoid valve terminal B and PCM terminal 1AX
  - — EGR boost sensor solenoid valve terminal A and main relay terminal C

Short circuit
- If there is continuity, there is a short circuit. Repair or replace the wiring harness.
  - — EGR boost sensor solenoid valve terminal B and body GND
  - — EGR boost sensor solenoid valve terminal A and power supply

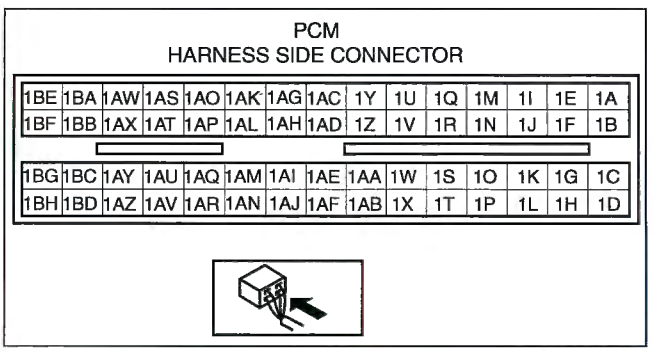

E6U140AW5991

POSITIVE CRANKCASE VENTILATION (PCV) SYSTEM AND CATALYTIC CONVERTER SYSTEM LOCATION INDEX [L3, AJ]

E6U011600040W01

L3 engine models

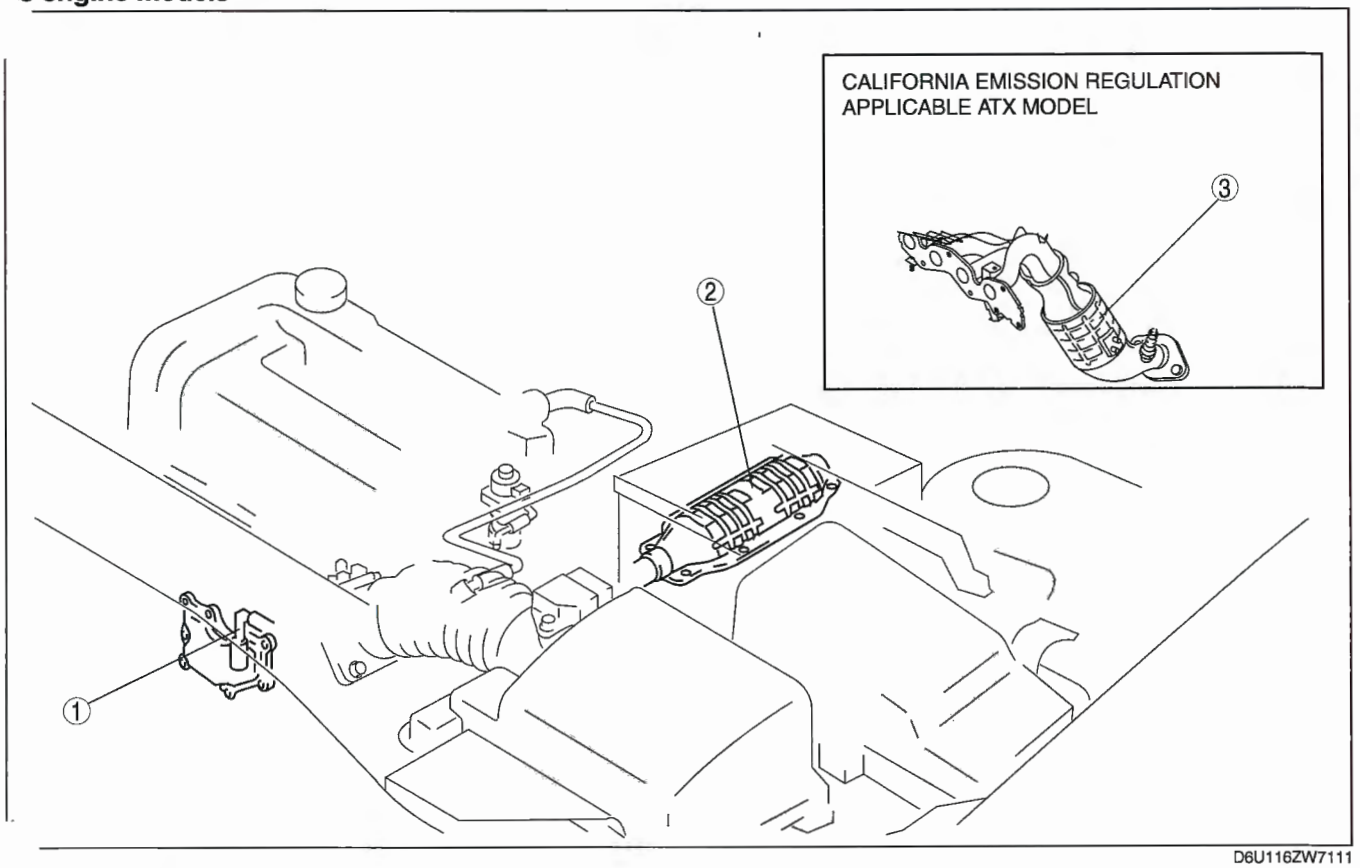

D6U116ZW7111

AJ engine models

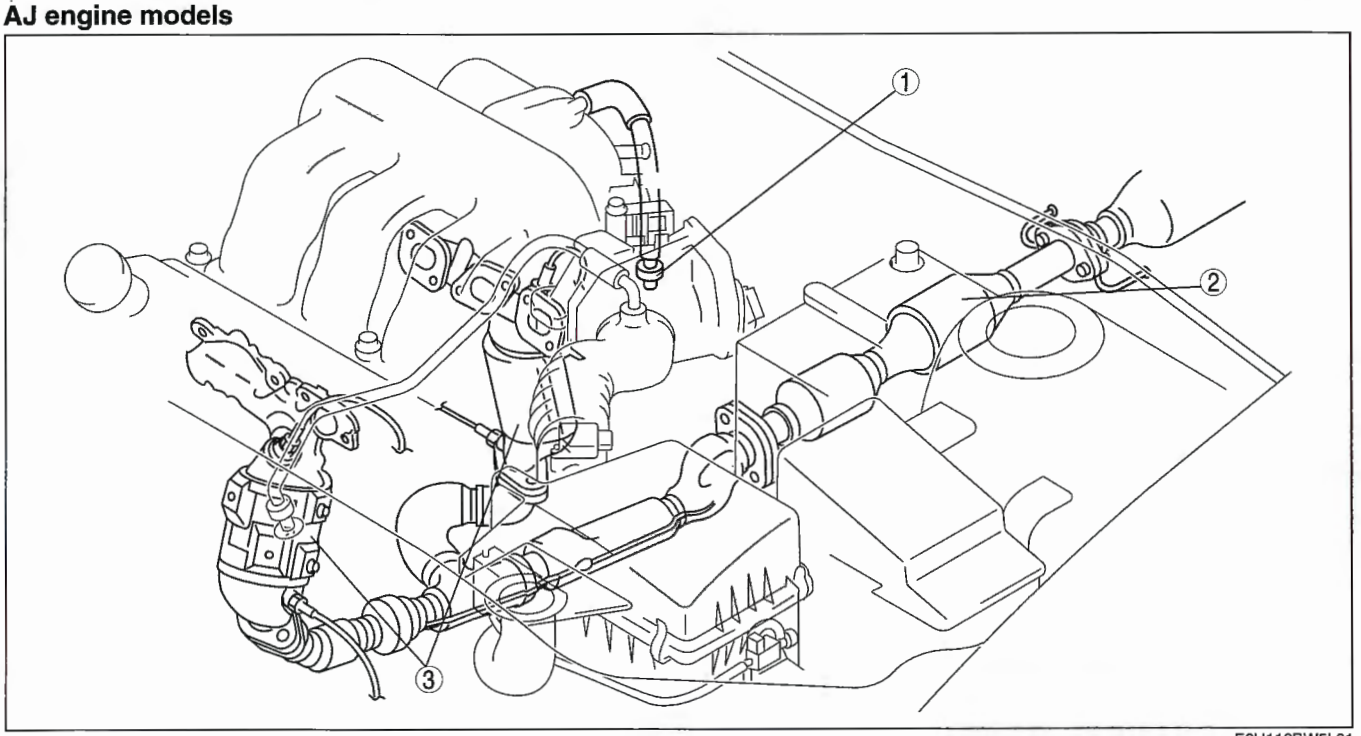

E6U116BW5L01

1	PCV valve (See 01–16A–23 POSITIVE CRANKCASE VENTILATION (PCV) VALVE INSPECTION [L3]) (See 01–16A–23 POSITIVE CRANKCASE VENTILATION (PCV) VALVE INSPECTION [AJ])

2	Three way catalytic converter (TWC)
3	Warm-up three way catalytic converter (WU-TWC) (See 01–16A–23 WARM-UP THREE-WAY CATALYTIC CONVERTER (WU-TWC) INSPECTION [L3, AJ])

POSITIVE CRANKCASE VENTILATION (PCV) SYSTEM FLOW DIAGRAM [L3, AJ]

E6U011600040W02

L3 engine models

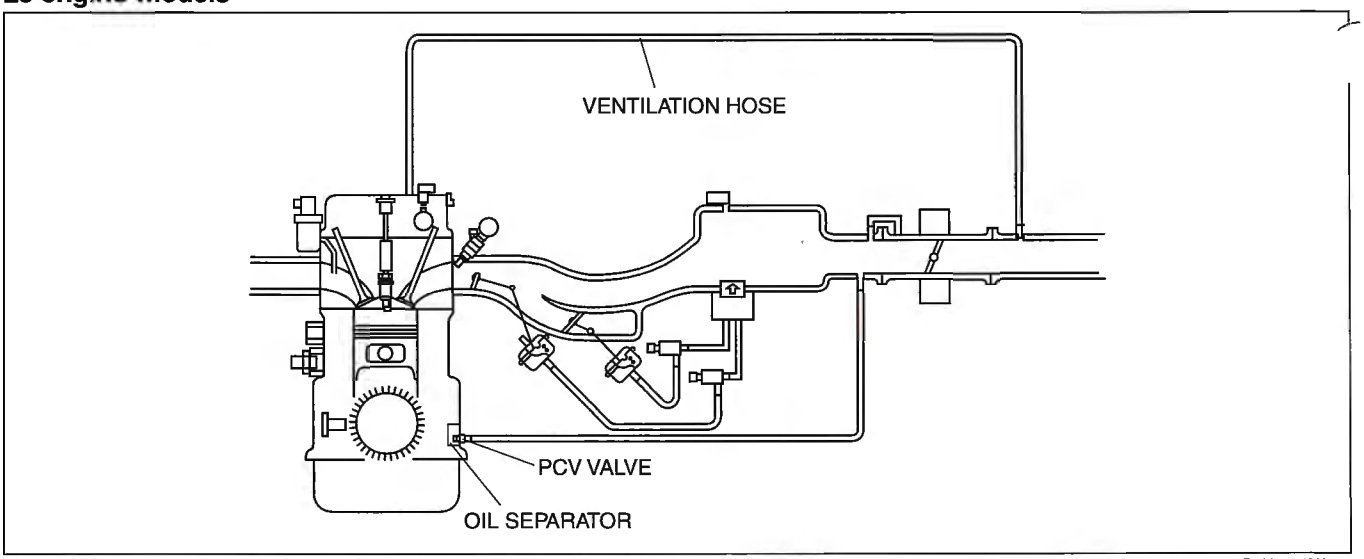

B6U0116W033

AJ engine models

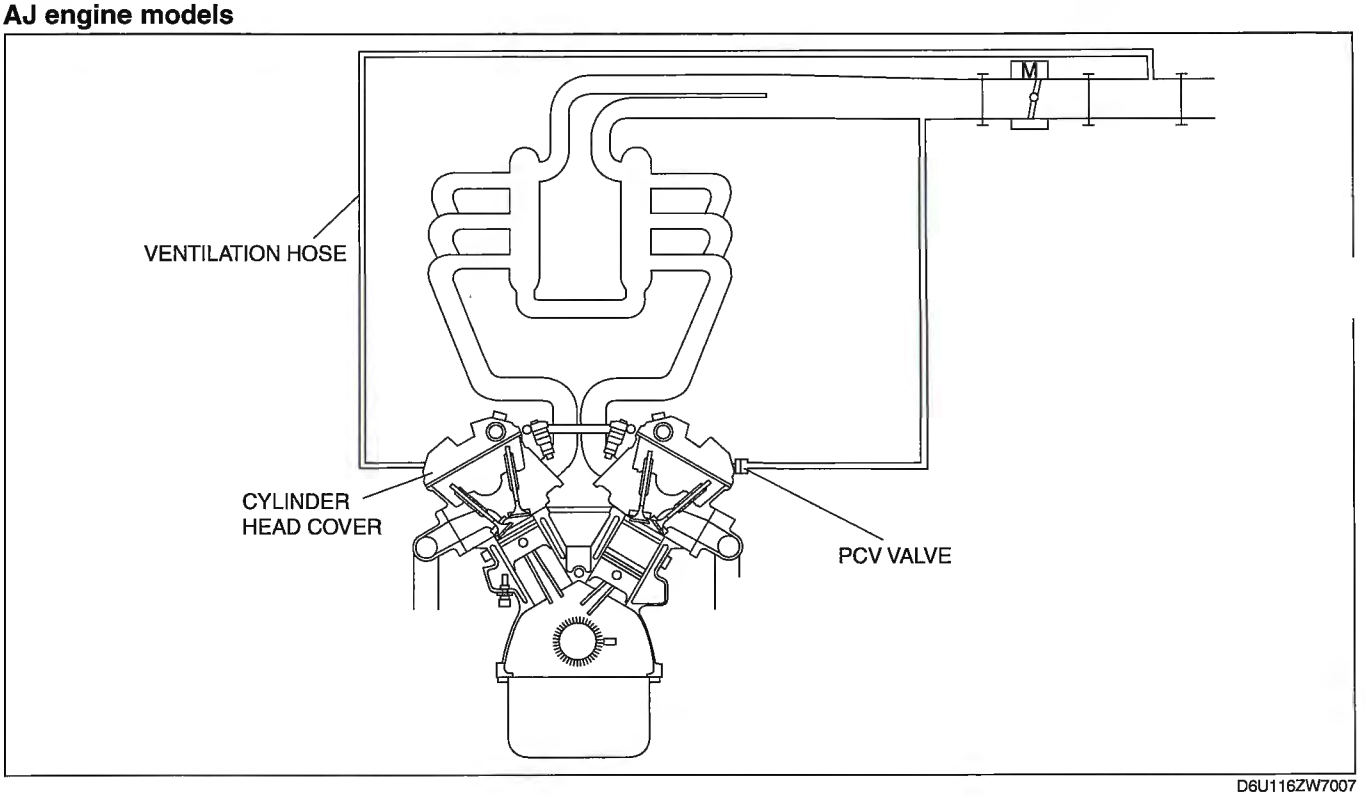

D6U116ZW7007

POSITIVE CRANKCASE VENTILATION (PCV) VALVE INSPECTION [L3]

E6U011613890W01

1. Disconnect the negative battery cable.
2. Remove the intake manifold. (see 01–13A–4 INTAKE AIR SYSTEM REMOVAL/INSTALLATION [L3].) Remove the PCV valve.
3. Blow through the valve and verify that air flows as specified.
   - If not as specified, replace the PCV valve.

Specification

Condition	Airflow
Air applied from port A to B	Yes
Air applied from port B to A	No

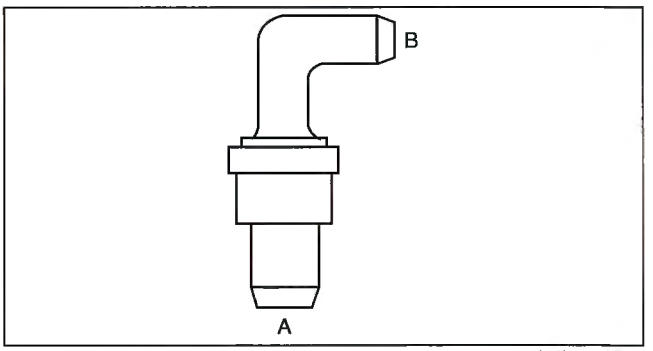

A6E3916W007

POSITIVE CRANKCASE VENTILATION (PCV) VALVE INSPECTION [AJ]

E6U011613890W02

Note

- Removing the PCV valve might damage to the tab of the PCV valve and it will not be able to be reinstalled. Due to this, inspect the PCV valve with it installed on the vehicle.

1. Disconnect the negative battery cable.
2. Disconnect the PCV hose from the PCV valve.
3. Apply pressure to the PCV valve and verify that there is no airflow.
   - If there is airflow, replace the PCV valve.
4. Apply vacuum to the PCV valve and verify that there is airflow.
   - If there is no airflow, replace the PCV valve.

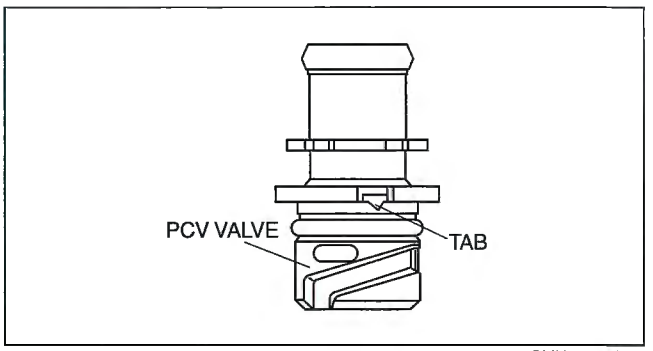

CMU0116W006

WARM-UP THREE-WAY CATALYTIC CONVERTER (WU-TWC) INSPECTION [L3, AJ]

E6U011620500W02

Caution

- **Perform the following procedures, DTC P0421*1 *2, P0431*2 is indicated only.**

1. Connect the WDS or equivalent to the DLC-2.
2. Start the engine and warm it up to normal operating temperature.
3. Turn off the engine.
4. Verify that the engine compression is within the specification. (See 01–10A–4 COMPRESSION INSPECTION [L3].) (See 01–10C–6 COMPRESSION INSPECTION [AJ].)
   - If the compression pressure is not within the specification, repair or replace the malfunction part.
5. Drive the vehicle for **10 min** at **65—96 km/h {40—60 mph}** to allow the WU-TWC to reach operating temperature.
6. Stop the vehicle and leave it in a safe space.
7. Access Test ID 10:21:80*1, 10:22:80*2 on the "Diagnostic Monitoring Test Result" function.
8. Verify that the test result is within the specified indicated on the WDS or equivalent.
   - If it is not as specified, replace the WU-TWC. (See 01–15A–2 EXHAUST SYSTEM REMOVAL/INSTALLATION [L3].) (See 01–15C–2 EXHAUST SYSTEM REMOVAL/INSTALLATION [AJ].)

*1 : L3
*2 : AJ

01–16B EMISSION SYSTEM [L3 WITH TC]



EVAPORATIVE EMISSION (EVAP) CONTROL SYSTEM LOCATION INDEX [L3 WITH TC] 01–16B–2
Engine Compartment Side 01–16B–2
Fuel Tank Side 01–16B–3
EVAPORATIVE EMISSION (EVAP) CONTROL SYSTEM DIAGRAM [L3 WITH TC] 01–16B–4
EVAPORATIVE EMISSION (EVAP) CONTROL SYSTEM REMOVAL/INSTALLATION [L3 WITH TC] 01–16B–4
Engine Compartment Side 01–16B–4
Positive Crankcase Ventilation (PCV) Valve Removal Note 01–16B–5
Purge Solenoid Valve Installation Note 01–16B–5
Fuel Tank Side 01–16B–6
FUEL-FILLER CAP INSPECTION [L3 WITH TC] 01–16B–7
Leakage Inspection 01–16B–7
AIR FILTER INSPECTION [L3 WITH TC] 01–16B–8
CHARCOAL CANISTER INSPECTION [L3 WITH TC] 01–16B–8
EVAPORATIVE EMISSION (EVAP) SYSTEM LEAK DETECTION PUMP REMOVAL/INSTALLATION [L3 WITH TC] 01–16B–8
EVAPORATIVE EMISSION (EVAP) SYSTEM LEAK DETECTION PUMP INSPECTION [L3 WITH TC] 01–16B–8
Airflow Inspection 01–16B–8
Resistance Inspection 01–16B–9
Circuit Open/Short Inspection 01–16B–9
PURGE SOLENOID VALVE INSPECTION [L3 WITH TC] 01–16B–10
Airflow Inspection 01–16B–10
Circuit Open/Short Inspection 01–16B–10
CHECK VALVE INSPECTION [L3 WITH TC] 01–16B–11
EGR VALVE REMOVAL/INSTALLATION [L3 WITH TC] 01–16B–11
EGR Valve Removal Note 01–16B–11
EGR VALVE INSPECTION [L3 WITH TC] 01–16B–11
Resistance Inspection 01–16B–11
Circuit Open/Short Inspection 01–16B–12
POSITIVE CRANKCASE VENTILATION (PCV) VALVE INSPECTION [L3 WITH TC] 01–16B–13
WARM-UP THREE-WAY CATALYTIC CONVERTER (WU-TWC) INSPECTION [L3 WITH TC] 01–16B–13

EVAPORATIVE EMISSION (EVAP) CONTROL SYSTEM LOCATION INDEX [L3 WITH TC]

E6U011600030W04

Engine Compartment Side

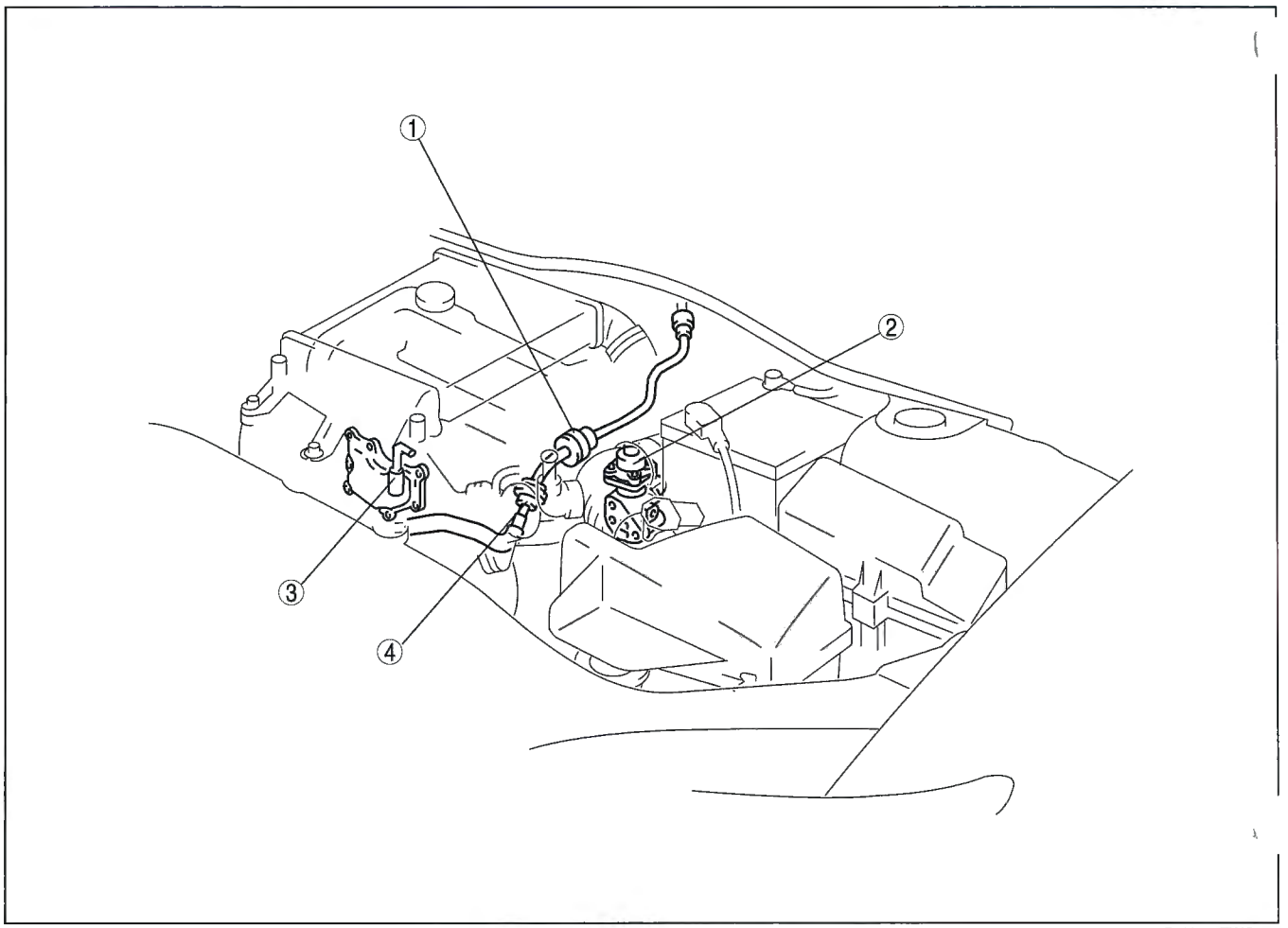

D6U116ZWC001

1	Purge solenoid valve (See 01–16B–10 PURGE SOLENOID VALVE INSPECTION [L3 WITH TC].)
2	EGR valve (See 01–16B–11 EGR VALVE REMOVAL/ INSTALLATION [L3 WITH TC].) (See 01–16B–11 EGR VALVE INSPECTION [L3 WITH TC].)
3	WU-TWC (See 01–16B–13 WARM-UP THREE-WAY CATALYTIC CONVERTER (WU-TWC) INSPECTION [L3 WITH TC].)

4	TWC
5	PCV valve (See 01–16B–13 POSITIVE CRANKCASE VENTILATION (PCV) VALVE INSPECTION [L3 WITH TC].)
6	Check valve (See 01–16B–11 CHECK VALVE INSPECTION [L3 WITH TC].)

Fuel Tank Side

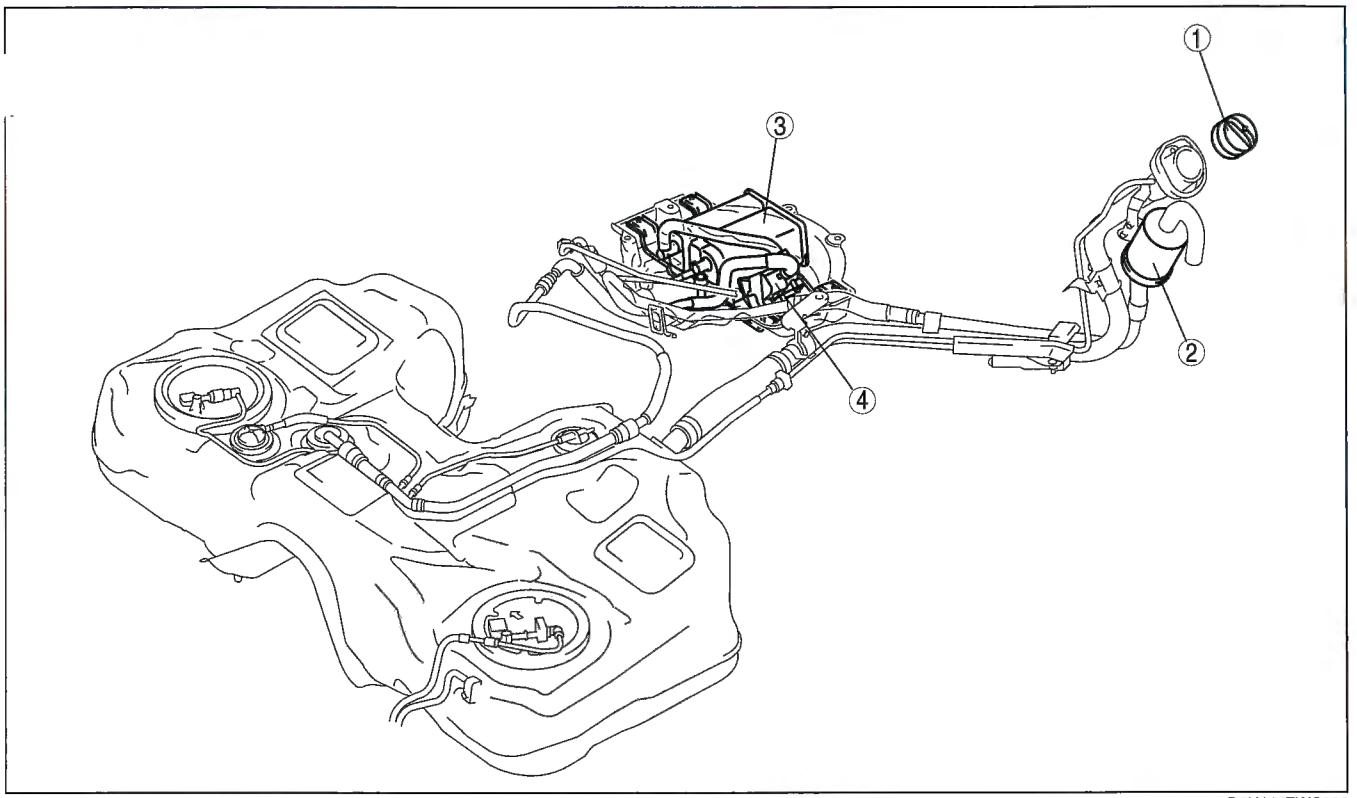

D6U116ZWC002

1	Fuel filler cap (See 01–16B–7 FUEL-FILLER CAP INSPECTION [L3 WITH TC].)
2	Air filter (See 01–16B–8 AIR FILTER INSPECTION [L3 WITH TC].)
3	Charcoal canister (See 01–16B–4 EVAPORATIVE EMISSION (EVAP) CONTROL SYSTEM REMOVAL/INSTALLATION [L3 WITH TC].) (See 01–16B–8 CHARCOAL CANISTER INSPECTION [L3 WITH TC].)
4	EVAP system leak detection pump (See 01–16B–4 EVAPORATIVE EMISSION (EVAP) CONTROL SYSTEM REMOVAL/INSTALLATION [L3 WITH TC].) (See 01–16B–8 EVAPORATIVE EMISSION (EVAP) SYSTEM LEAK DETECTION PUMP INSPECTION [L3 WITH TC].)

EVAPORATIVE EMISSION (EVAP) CONTROL SYSTEM DIAGRAM [L3 WITH TC]

E6U011600030W05

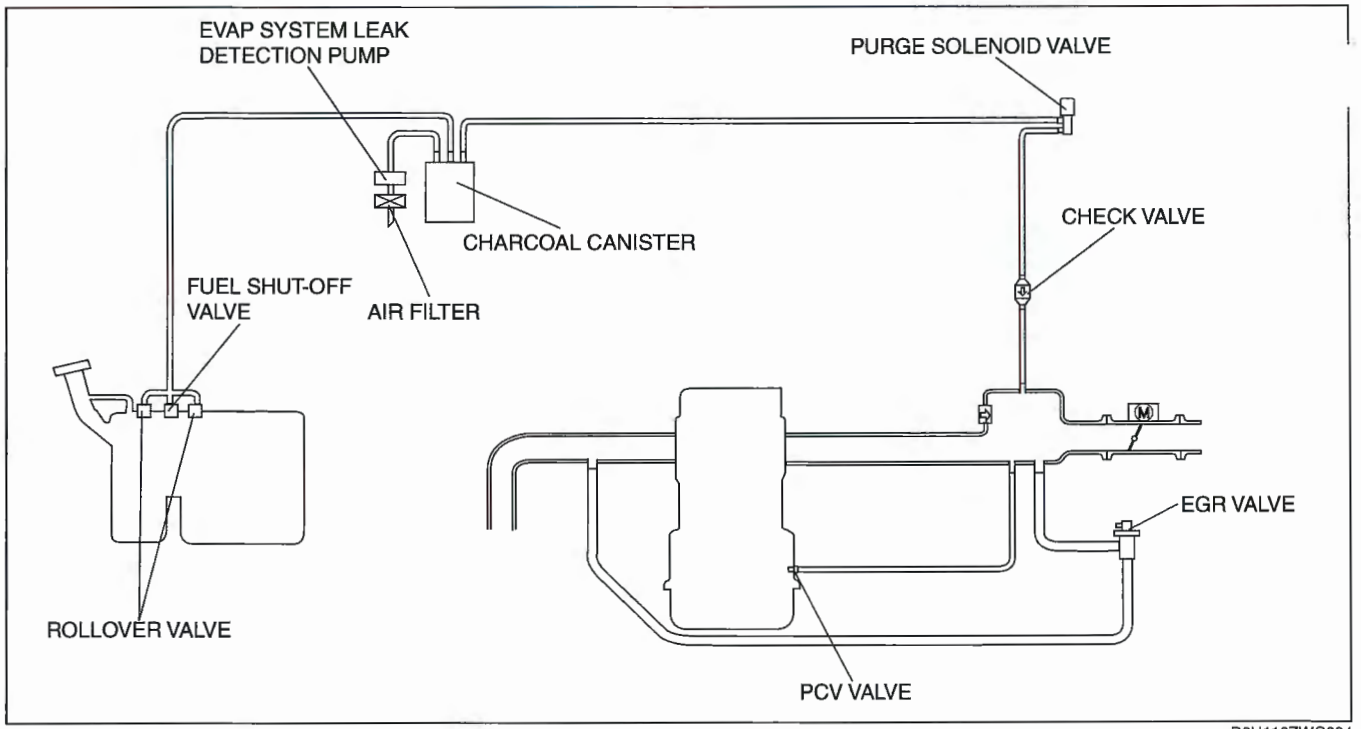

D6U116ZWC004

EVAPORATIVE EMISSION (EVAP) CONTROL SYSTEM REMOVAL/INSTALLATION [L3 WITH TC]

E6U011600030W06

Engine Compartment Side

1. Remove in the order indicated in the table.
2. Install in the reverse order of removal.

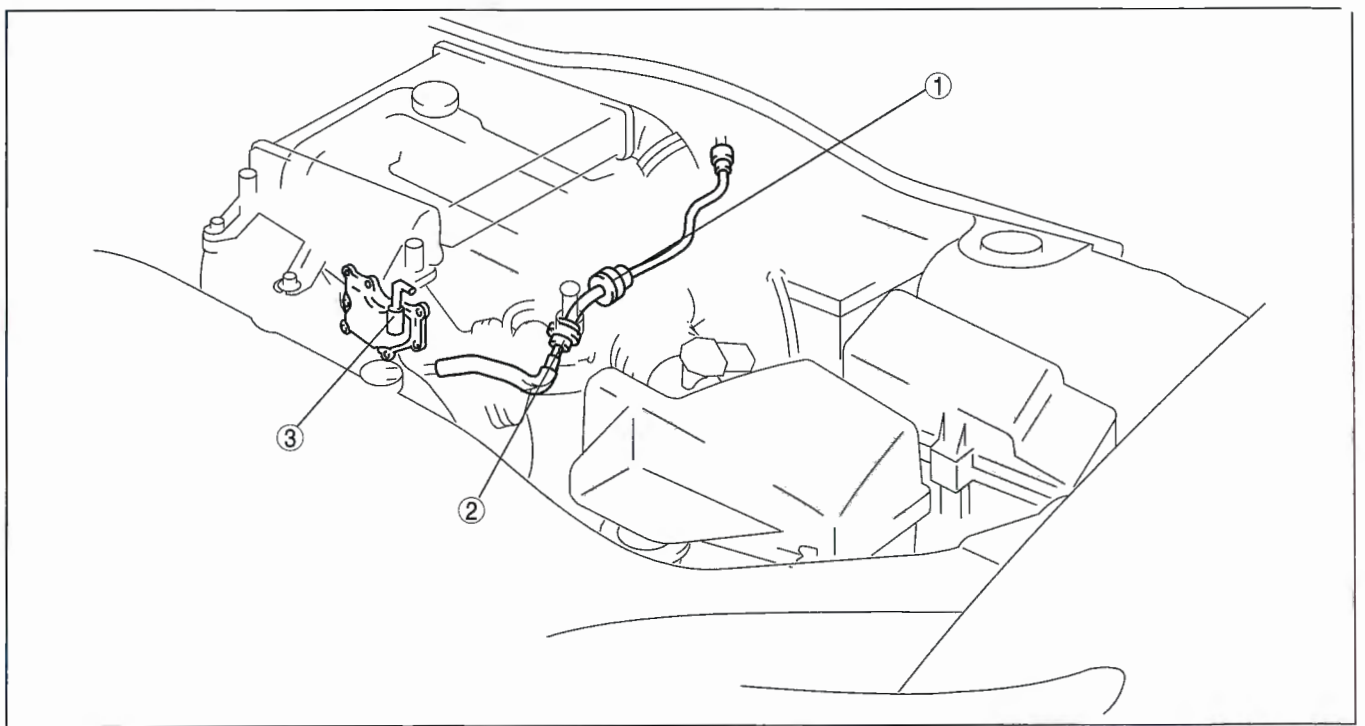

D6U116ZWC020

1	Purge solenoid valve (See 01–16B–5 Purge Solenoid Valve Installation Note.)
2	Check valve

3	PCV valve (See 01–16B–5 Positive Crankcase Ventilation (PCV) Valve Removal Note.)

Positive Crankcase Ventilation (PCV) Valve Removal Note

1. Remove the intake manifold. (See 01–13B–4 INTAKE AIR SYSTEM REMOVAL/INSTALLATION [L3 WITH TC].)
2. Remove the PCV valve.

Purge Solenoid Valve Installation Note

1. Install the purge solenoid valve.

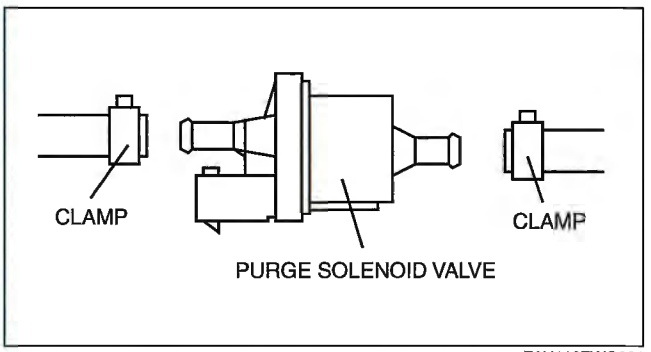

E6U116ZWC001

2. Fit the vacuum hose (purge solenoid valve) onto the respective fittings, and install clamps as shown.

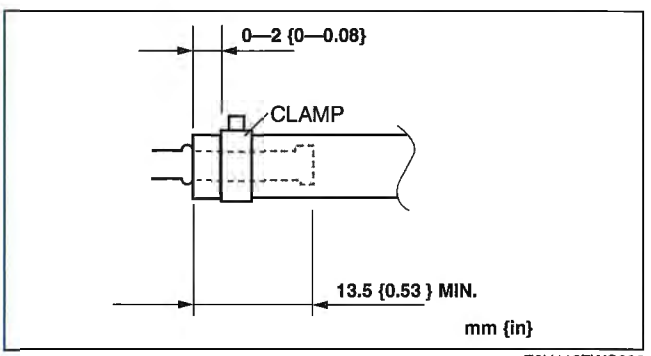

E6U116ZWC002

Fuel Tank Side

1. Raise the rear of the vehicle and support it with safety stands.
2. Remove in the order indicated in the table.
3. Install in the reverse order of removal.

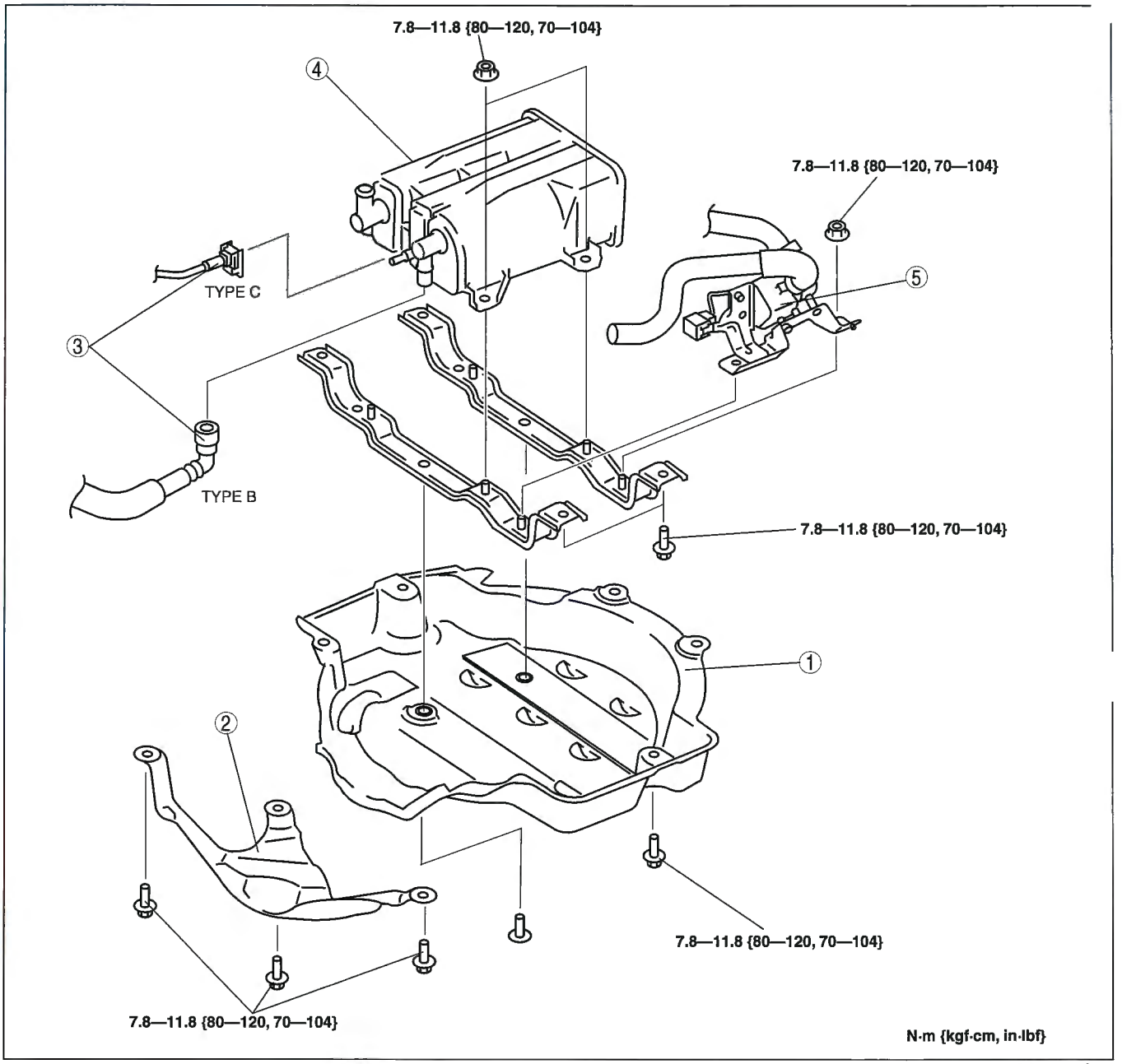

D6U116ZWC005

1	Protector
2	Insulator
3	Evaporative hose (See 01–14B–21 QUICK RELEASE CONNECTOR REMOVAL/INSTALLATION [L3 WITH TC])
4	Charcoal canister

5	EVAP system leak detection pump (See 01–16B–8 EVAPORATIVE EMISSION (EVAP) SYSTEM LEAK DETECTION PUMP REMOVAL/INSTALLATION [L3 WITH TC])

FUEL-FILLER CAP INSPECTION [L3 WITH TC]

E6U011642250W02

Leakage Inspection

1. Perform the following **SST** (Evaporative Emission System Tester 134-01049) self-test:

Note
- If the tester does not work correctly during self-test, refer to the tester operators manual for more detailed procedures.

(1) Verify that the gas cylinder valve is closed and the control valve located on the tester is in the TEST position. All tester displays should be off at this time.
(2) Connect the long hose (part of **SST**) to the tester.
(3) Connect the manifold assembly (part of **SST**) to the long hose as shown.
(4) Open the gas cylinder valve and verify the gas cylinder regulator left gauge reads **69—82 kPa {0.71—0.84 kgf/cm^2, 10—12 psi}** (preset at factory).
- If not, refer to the tester operators manual to contact tester manufacturer.

(5) Press the ON/OFF switch to turn on the **SST** and make sure the left display reads **0.0**.
(6) Turn the control valve on the tester to the FILL position.

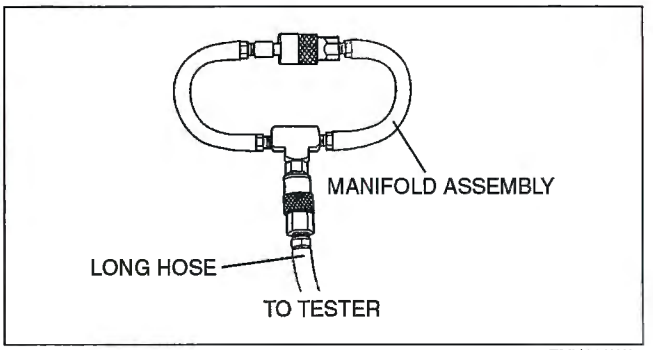

ZMU116WA6

(7) Verify the left display reading is **within 13.9 to 14.0 in of water.**
- If not, adjust the pressure using the regulator knob located on the right side of the tester.

(8) Turn the control valve to TEST position and press the START switch.
(9) After the **2-min** countdown (left display) is completed, the right display shows the total pressure loss for that period. A **0.5 in** of water loss is acceptable on the self-test.
- If the loss is **more than 0.5 in** of water, do one or more self-test. If the failed test repeats, check for leak using the ultrasonic leak detector (part of **SST**).

Press the RESET switch to set the left display reading to **0.0**.

3. Connect the fuel cap receiver assembly (part of **SST**) to the manifold assembly and fuel-filler cap from the vehicle.
- If the fuel-filler cap is not a genuine part, replace it.

4. Turn the control valve to the FILL position.
5. Wait (**maximum 20 s**) until the left display reads **13.9 to 14 in of water.**
- If the reading is slightly below the specification, adjust it using the regulator knob.
- If the reading is far below, the fuel-filler cap has leak. Replace it.

6. Turn the control valve to the TEST position and press the START switch.
7. After the **2-min** countdown (left display) is completed, check the test result (the failed/passed light on the tester).
- If the green light turns on, the fuel-filler cap is normal.
- If the red light turns on, the fuel-filler cap has leakage. Replace it.

8. Close the gas cylinder valve.
9. Turn the control valve to the FILL position.
10. Press the ON/OFF switch to turn off the tester.

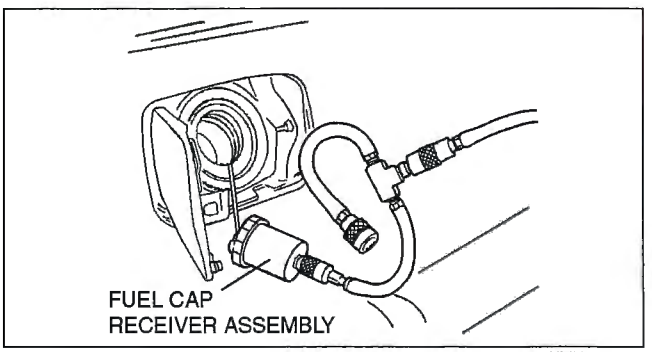

ZMU116WA7

AIR FILTER INSPECTION [L3 WITH TC]

E6U011613988W02

1. Remove the air filter.
2. Blow from port A and verify that there is airflow from port B.
   - If not as specified, replace the air filter.
3. Blow from port B and verify that there is airflow from port A.
   - If not as specified, replace the air filter.

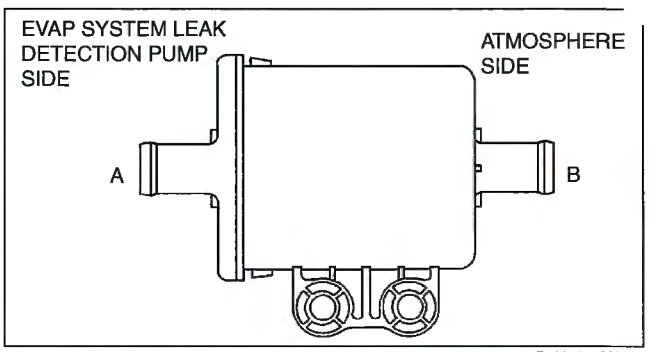

B6U0116W004

CHARCOAL CANISTER INSPECTION [L3 WITH TC]

E6U011613970W02

1. Remove the charcoal canister. (See 01–16B–4 EVAPORATIVE EMISSION (EVAP) CONTROL SYSTEM REMOVAL/INSTALLATION [L3 WITH TC].)
2. Plug ports A and C, then blow air into port B.

Caution
- **Do not apply the pressure more than 20 kPa {0.2 kgf/cm^2, 2.8 psi} to the charcoal canister. Doing so will damage the charcoal canister.**

3. Verify that there is no air leakage from the case.
   - If not as specified, replace the charcoal canister. (See 01–16B–6 Fuel Tank Side.)

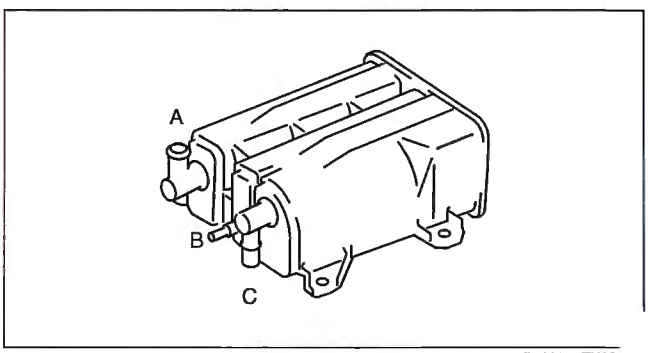

D6U116ZWC(

EVAPORATIVE EMISSION (EVAP) SYSTEM LEAK DETECTION PUMP REMOVAL/INSTALLATION [L3 WITH TC]

E6U011618581W02

1. Removal the charcoal canister. (See 01–16B–6 Fuel Tank Side.)
2. Remove the EVAP system leak detection pump. (See 01–16B–6 Fuel Tank Side.)
3. Install in the reverse order of removal.

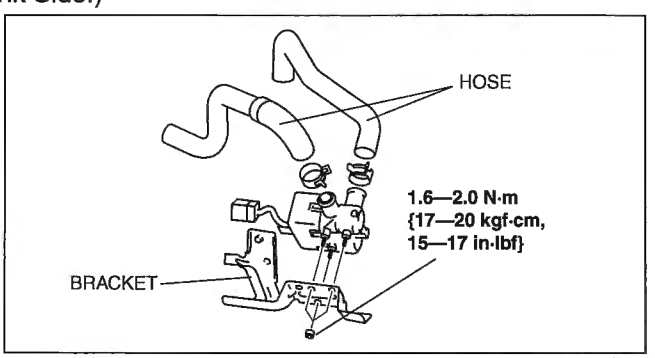

D6U116ZWC006

EVAPORATIVE EMISSION (EVAP) SYSTEM LEAK DETECTION PUMP INSPECTION [L3 WITH TC]

E6U011618581W03

Airflow Inspection

Note
- Perform the following test only when directed.

1. Disconnect the negative battery cable.
2. Remove the EVAP system leak detection pump. (See 01–16B–4 EVAPORATIVE EMISSION (EVAP) CONTROL SYSTEM REMOVAL/INSTALLATION [L3 WITH TC].)
3. Blow air into port A and verify that there is airflow from port B.
   - If not as specified, replace the EVAP system leak detection pump.

4. Blow air into port B and verify that there is airflow from port A.
   - If not as specified, replace the EVAP system leak detection pump.
   - If as specified, perform the following "Resistance Inspection".

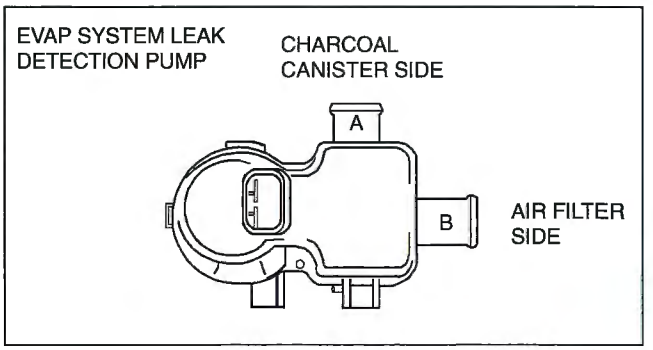

B6U0116W006

Resistance Inspection

Note
- Perform the following procedure only when directed.

1. Disconnect the negative battery cable.
2. Inspect resistance of the EVAP system leak detection pump.
   - If not as specified, replace the EVAP system leak detection pump.
   - If as specified, carry out the "Circuit Open/Short Inspection".

Terminals	Resistance (ohm)
A—B	20—50
A—C	26.6—32.4
A—D	MAX. 118

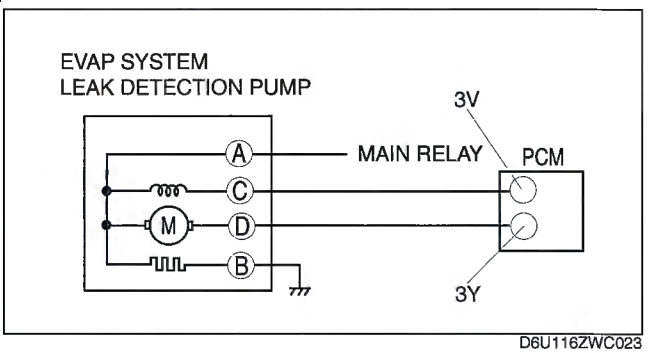

D6U116ZWC023

Circuit Open/Short Inspection

1. Disconnect the PCM connector. (See 01–40B–6 PCM REMOVAL/INSTALLATION [L3 WITH TC].)
2. Inspect the following wiring harnesses for an open or short circuit (continuity check).

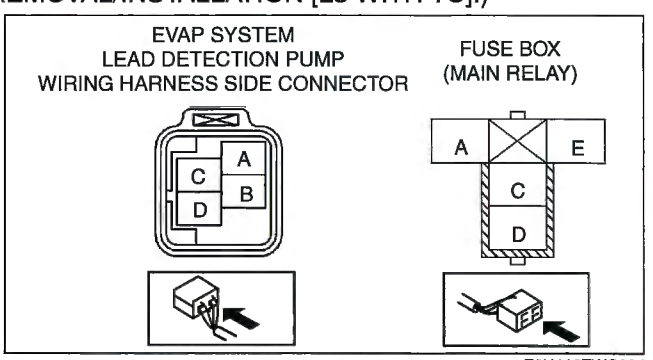

E6U116ZWC004

Open circuit
- If there is no continuity, there is an open circuit. Repair or replace the wiring harness.
  - — EVAP system leak detection pump terminal C and PCM terminal 3V
  - — EVAP system leak detection pump terminal D and PCM terminal 3Y
  - — EVAP system leak detection pump terminal A and main relay terminal C
  - — EVAP system leak detection pump terminal B and the body Ground

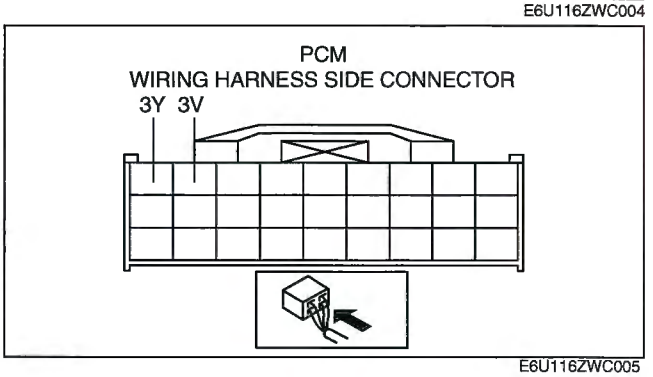

E6U116ZWC005

Short circuit
- If there is continuity, there is a short circuit. Repair or replace the wiring harness.
  - — EVAP system leak detection pump terminal C and power supply
  - — EVAP system leak detection pump terminal D and power supply
  - — EVAP system leak detection pump terminal A and the body Ground
  - — EVAP system leak detection pump terminal B and power supply

PURGE SOLENOID VALVE INSPECTION [L3 WITH TC]

E6U011618744W02

Airflow Inspection

Note
- Perform the following test only when directed.

1. Disconnect the negative battery cable.
2. Remove the purge solenoid valve. (See 01–16B–4 Engine Compartment Side.)
3. Inspect airflow between the ports under the following conditions.
   - If not as specified, replace the purge solenoid valve.
   - If as specified, carry out the "Circuit Open/Short Inspection".

O—O : Continuity O═O : Airflow

Step	Terminal		Port	
	A	B	A	B
1	O—O			
2	B+	GND	O═O	

B6U0116W014

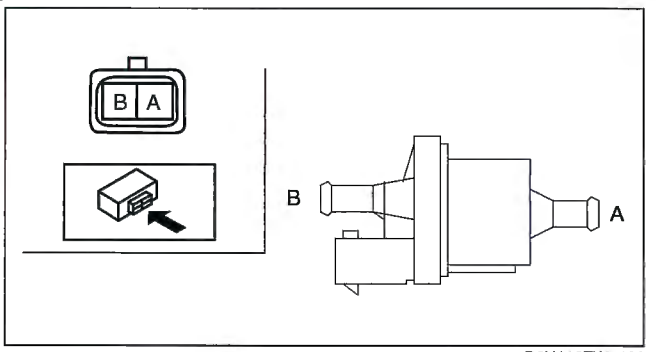

D6U116ZW7109

Circuit Open/Short Inspection

1. Disconnect the PCM connector. (See 01–40B–6 PCM REMOVAL/INSTALLATION [L3 WITH TC].)
2. Inspect the following wiring harnesses for an open or short circuit (continuity check).

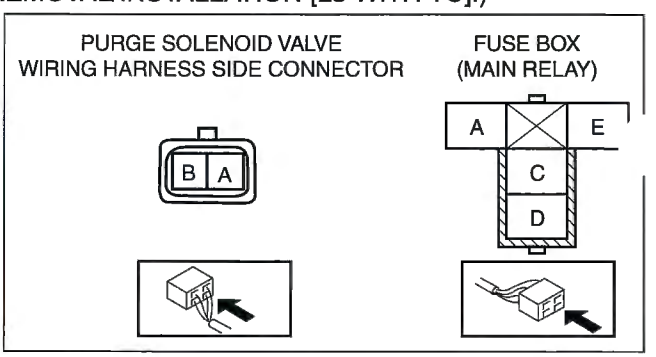

E6U116ZWC006

Open circuit
- If there is no continuity, there is an open circuit. Repair or replace the wiring harness.
  - — Purge solenoid valve terminal B and PCM terminal 4T
  - — Purge solenoid valve terminal A and main relay terminal C

Short circuit
- If there is continuity, there is a short circuit. Repair or replace the wiring harness.
  - — Purge solenoid valve terminal B and body Ground
  - — Purge solenoid valve terminal A and power supply

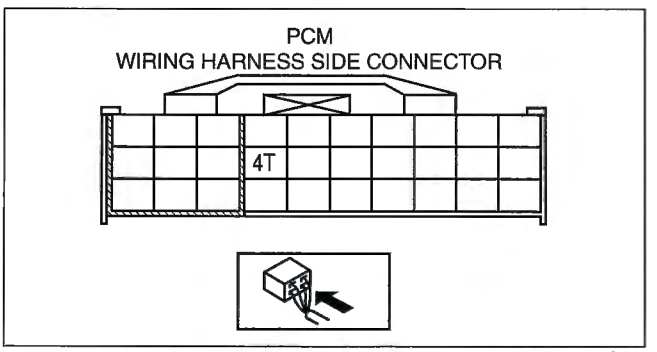

D6U116ZWC024

CHECK VALVE INSPECTION [L3 WITH TC]

E6U011642910W01

1. Remove the check valve. (See 01–16B–4 EVAPORATIVE EMISSION (EVAP) CONTROL SYSTEM REMOVAL/INSTALLATION [L3 WITH TC].)
2. Blow through the valve and verify that air flows as specified.
   - If not as specified, replace the check valve.

Specification

Condition	Airflow
Air applied from port B to A	Yes
Air applied from port A to B	No*

* : The check valve is normal if the aeration to port B is **3.5 kPa/min {0.03 kgf/cm^2·min, 0.5 psi/min} or less** when **130 kPa {1.32 kgf/cm^2, 18.9 psi}** is applied to port A.

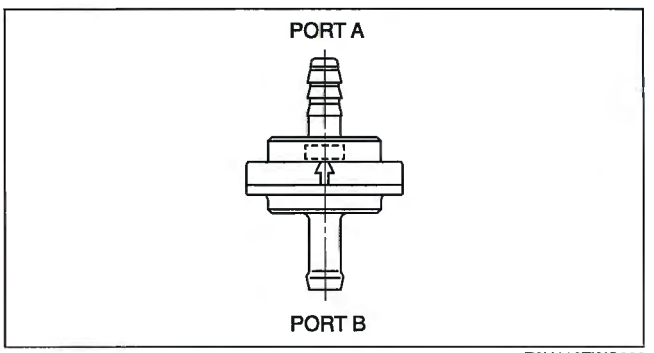

E6U116ZWC003

EGR VALVE REMOVAL/INSTALLATION [L3 WITH TC]

E6U011620300W05

1. Disconnect the negative battery cable.
2. Disconnect the EGR valve connector.
3. Drain the engine coolant. (See 01–12B–4 ENGINE COOLANT REPLACEMENT [L3 WITH TC].)
4. Remove in the order indicated in the table.
5. Install in the reverse order of removal.

1	Water hose
2	EGR valve (See 01–16B–11 EGR Valve Removal Note.)

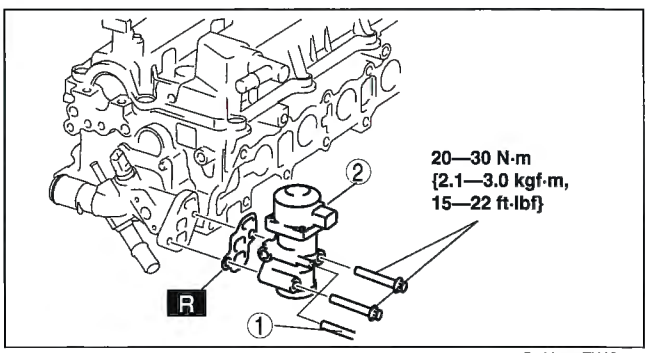

D6U116ZWC003

EGR Valve Removal Note

1. Remove the air hose. (See 01–13B–4 INTAKE AIR SYSTEM REMOVAL/INSTALLATION [L3 WITH TC].)

EGR VALVE INSPECTION [L3 WITH TC]

E6U011620300W06

Resistance Inspection

Note

- Perform the following test only when directed.

1. Disconnect the negative battery cable.

2. Inspect resistance of the EGR valve coils.
   - If not as specified, replace the EGR valve.
   - If as specified, carry out the "Circuit Open/Short Inspection".

Terminals	Resistance (ohm)
C—E C—A D—B D—F	8—9

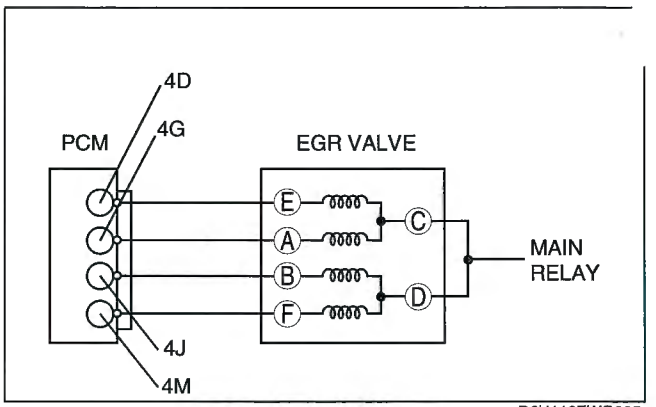

D6U116ZWC025

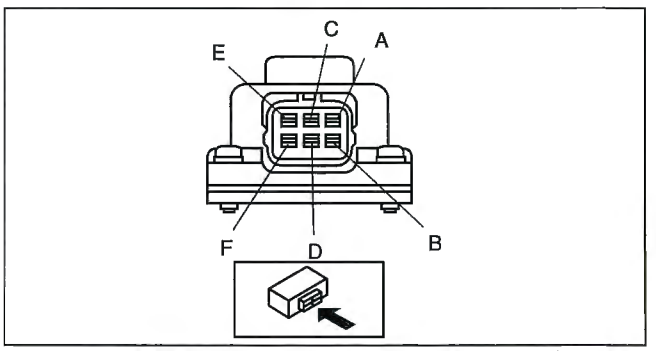

B6U0116W032

Circuit Open/Short Inspection

1. Disconnect the PCM connector. (See 01–40B–6 PCM REMOVAL/INSTALLATION [L3 WITH TC].)
2. Inspect the following wiring harnesses for open or short circuit (continuity check).

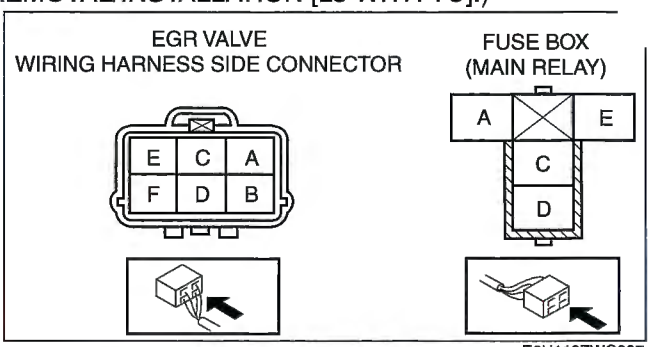

E6U116ZWC007

Open circuit

- If there is no continuity, there is an open circuit. Repair or replace the wiring harness.
  - — EGR valve terminal E and PCM terminal 4D
  - — EGR valve terminal A and PCM terminal 4G
  - — EGR valve terminal B and PCM terminal 4J
  - — EGR valve terminal F and PCM terminal 4M
  - — EGR valve terminal C or D and main relay terminal C

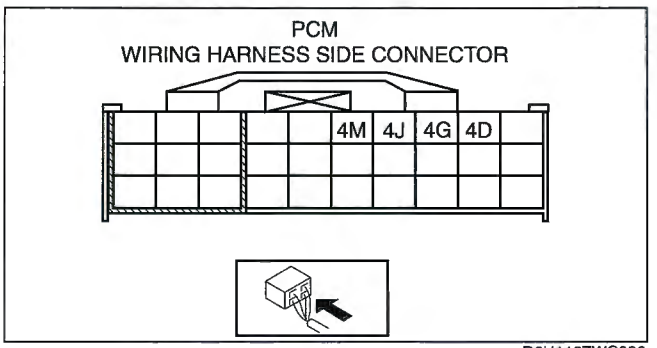

D6U116ZWC026

Short circuit

- If there is continuity, there is a short circuit. Repair or replace the wiring harness.
  - — EGR valve terminal E and Ground
  - — EGR valve terminal A and Ground
  - — EGR valve terminal B and Ground
  - — EGR valve terminal F and Ground
  - — EGR valve terminal C or D and power supply

3. Remove the EGR valve, and inspect for any damage or clogging.
   - If there is no damage or clogging, replace the EGR valve.

POSITIVE CRANKCASE VENTILATION (PCV) VALVE INSPECTION [L3 WITH TC]

E6U011613890W03

1. Remove the PCV valve. (See 01–16B–5 Positive Crankcase Ventilation (PCV) Valve Removal Note.)
2. Blow through the valve and verify that air flows as specified.
   - If not as specified, replace the PCV valve.

Specification

Condition	Airflow
Air applied from port A to B	Yes
Air applied from port B to A	No

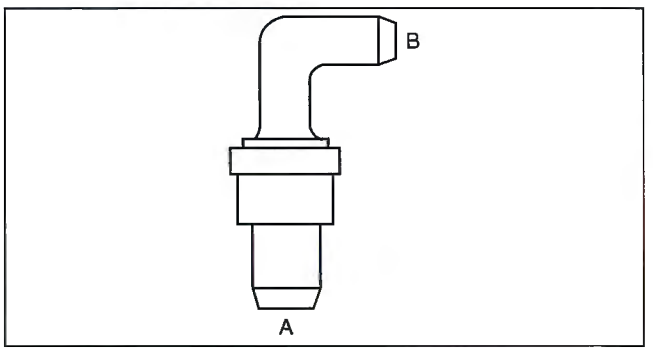

A6E3916W007

WARM-UP THREE-WAY CATALYTIC CONVERTER (WU-TWC) INSPECTION [L3 WITH TC]

E6U011620500W03

Caution
- **Perform the following procedures, DTC P0421 is indicated only.**

1. Connect the WDS or equivalent to the DLC-2.
2. Start the engine and warm it up to normal operating temperature.
3. Turn off the engine.
4. Verify that the engine compression is within the specification. (See 01–10B–9 COMPRESSION INSPECTION [L3 WITH TC].)
   - If the compression pressure is not within the specification, repair or replace the malfunction part.
5. Drive the vehicle for **10 min** at **65—96 km/h {40—60 mph}** to allow the WU-TWC to reach operating temperature.
6. Stop the vehicle and leave it in a safe space.
   Access Test ID 10:21:80 on the "Diagnostic Monitoring Test Result" function.
7. Verify that the test result is within the specified indicated on the WDS or equivalent.
   - If it is not as specified, replace the WU-TWC. (See 01–15B–2 EXHAUST SYSTEM REMOVAL/ INSTALLATION [L3 WITH TC].)

01–17A CHARGING SYSTEM [L3, AJ]

BATTERY REMOVAL/INSTALLATION [L3, AJ] 01–17A–1
BATTERY INSPECTION [L3, AJ] 01–17A–2
Electrolyte gravity **01–17A–2**
Inspection and Verification **01–17A–2**
Battery Condition Test **01–17A–2**
Back-up current **01–17A–2**
BATTERY RECHARGING [L3, AJ] 01–17A–3
GENERATOR REMOVAL/INSTALLATION [L3, AJ] 01–17A–4
L3 ..... **01–17A–4**
Generator and Generator Heat Insulator Removal Note (L3) **01–17A–5**
Generator and Generator Heat Insulator Installation Note (L3) **01–17A–5**
AJ **01–17A–5**
GENERATOR INSPECTION [L3, AJ] 01–17A–5
Generator Warning Light **01–17A–5**
Generator **01–17A–6**
Generator Inner Parts **01–17A–7**
GENERATOR DISASSEMBLY/ASSEMBLY [L3, AJ] 01–17A–10
L3 ..... **01–17A–10**
AJ **01–17A–11**

BATTERY REMOVAL/INSTALLATION [L3, AJ]

1. Remove in the order indicated in the table.

1	Negative battery cable
2	Positive battery cable
3	Battery clamp
4	Battery box
5	Battery
6	Battery tray

2. Install in the reverse order of removal.

E6U011718520W01

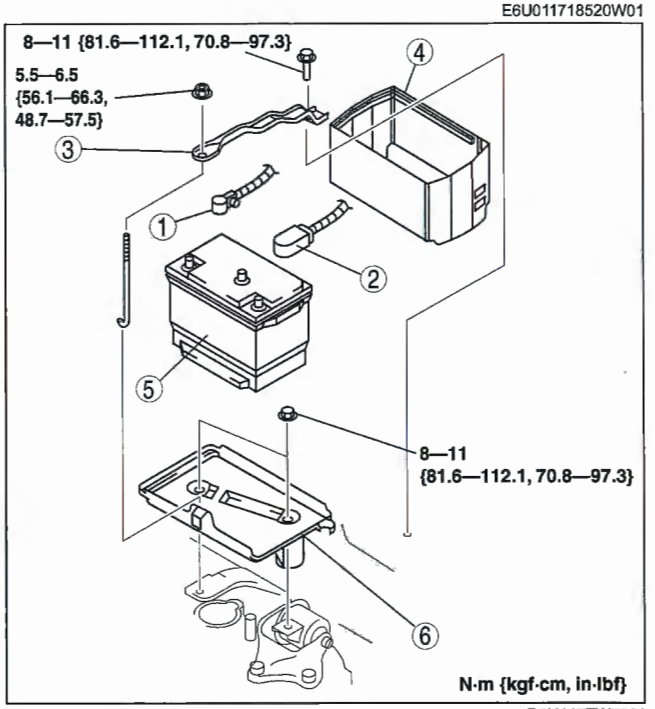

D6U117ZW7001

BATTERY INSPECTION [L3, AJ]

E6U011718520W02

Warning
- **Since battery acid is toxic, be careful when handling the battery.**
- **Since battery acid is highly corrosive, be careful not to allow it to contact clothing or the vehicle.**
- **In case battery acid contacts skin, eyes, or clothing, flush it immediately with running water. Especially if the acid gets in the eyes, flush with water for more than 15 min. and get prompt medical attention.**

Electrolyte gravity

1. Measure the electrolyte gravity using a hydrometer.
   - If it is less than the specification, recharge the battery. (See 01–17A–3 BATTERY RECHARGING [L3, AJ].)

Standard electrolyte gravity
1.22—1.29 [20 °C {68 °F}]

Inspection and Verification

1. Verify that the customer concern by operating the system.
2. Visually inspect for obvious signs of mechanical or electrical damage.

Visual Inspection Chart

Mechanical	Electrical
• Battery • Battery mounting	• Battery cables • Battery posts

3. If an obvious cause for a concern is found, correct the cause before proceeding to the next step.
4. If the fault is not visually evident, proceed to the pin point test.

Battery Condition Test

Note
- Failure to fully charge the battery before retesting may cause false readings.

Pin point test

1. Verify the battery condition using the Battery Analyzer.
   - If the meter read, GOOD BATTERY, inspect the generator. (See 01–17A–5 GENERATOR INSPECTION [L3, AJ].)
   - If the meter read, GOOD-RECHARGE, charge the battery and inspect the generator. (See 01–17A–5 GENERATOR INSPECTION [L3, AJ].)
   - If the meter read, CHARGE & RETEST, fully charge the battery and retest.
   - If the meter read, REPLACE BATTERY, install a new battery.
   - If the meter read, BAD CELL-REPLACE, install a new battery.

Back-up current

1. Verify that the ignition switch is off (key has been removed) and that all doors are closed.
2. Disconnect the negative battery cable.
3. Connect the tester between the negative battery terminal and negative battery cable, leave the battery undisturbed for **15 min.**, and then measure the back-up current.
   - If not within the specification, measure the back-up current while removing the fuses one by one from the inside of the main fuse block and the inside of the fuse block.

Note
- If the battery is not left undisturbed for **15 min.**, the tester will indicate a high value (**approx. 300 mA**).
- If the key or any electrical accessory is operated within **approx. 15 min.** after the tester is connected, the battery must be left undisturbed for **approx. 15 min.** from that point.

Caution
- **Operating electrical loads while the back-up current is being measured can damage the tester.**

Note
- For vehicles with the immobilizer system, the system periodically shifts synchronization of the security light flashing. Therefore, **45 mA (0.1 s)** current is supplied when the security light is illuminated, and **25 mA (2 s)** current is supplied when the security light is not illuminated. In addition, the measuring instrument, which shows the average value, indicates around **30 mA**.

Battery back-up current
Vehicles with immobilizer system: 25—45 mA
Vehicles without immobilizer system: 30 mA or less

4. Inspect and repair wiring harnesses and connectors of the fuse where the current has decreased.

BATTERY RECHARGING [L3, AJ]

E6U011718520W03

Warning

- **Hydrogen and oxygen gases are produced during normal battery operation. This gas mixture can explode if flames, sparks, or lighted tobacco are brought near the battery. When charging or using a battery in an enclosed space, always provide ventilation and shield your face and eyes. Failure to follow these instructions may result in personal injury.**
- **Batteries contain sulfuric acid. Avoid contact with skin or eyes. Also, shield your eyes when working near the battery to protect against possible splashing of the acid solution. In case contact with the skin, eyes, or clothing, flush immediately with water for a period of 15 min. and get prompt medical attention. If acid is swallowed, call physician immediately. Failure to follow these instructions may result in personal injury.**
- **Wear safety glasses. Battery charging can be dangerous. While being charged, the battery produces a potentially explosive mixture of hydrogen and oxygen gases. Keep sparks, flames and lighted cigarettes away from batteries. In case of acid contact with skin, eyes or clothing, flush immediately with large amounts of water. Get medical attention. Failure to follow these instructions may result in personal injury.**

Caution

- **Keep the battery and the surrounding parts, particularly the top, clean and dry. If electrolyte is evident on the top of the battery, clean it immediately. Even a weak electrolyte quickly attacks and corrodes the cable connections, battery hold-down clamp and battery ground cable. Use a rag soaked in a weak solution of water and baking soda to counteract the action of the spilled electrolyte.**

Note

- If excessive gassing of electrolyte spewing occurs during the charge, discontinue charging. The battery has reached usable charge. If the battery will not accept at least **5 A** after **20 min.** of charging, install a new battery.

1. Before recharging a discharged battery, inspect and repair the following conditions, if they exist:
   (1) Loose drive belt
   (2) Pinched or grounded generator voltage regulator wiring
   (3) Loose connections of generator voltage regulator wiring at the generator or voltage regulator
   (4) Loose or corroded connections at battery, grounded starter motor relay or engine
2. Excessive battery drain due to:
   (1) Interior lamps remaining energized (damaged or misadjusted switch, door ajar, etc.)
   (2) Lamp switch continuously on

Note

- Cold batteries will not readily accept a charge. Therefore, batteries should be allowed to warm up to **approx. 5 °C {41 °F}** before charging. This may require four to eight hours at room temperature depending on the initial temperature and battery size.
- A battery which has been completely discharged may be slow to accept a charge initially, and in some cases may not accept a charge at the normal charger setting. When batteries are in this condition, charging can be started by use of the dead battery switch on the charger setting so equipped.
- To determine whether a battery is accepting a charge, follow the charger manufacturer's instructions for use of the dead battery switch. If switch is a spring-loaded type, it should be held in the ON position for up to **3 min.**
- After releasing the switch and with the charger still on, measure the battery voltage using a tester. If it indicates **12 V** or higher, the battery is accepting a charge and is capable of being recharged. However, it may require up to **2 h** of charging with batteries colder than **5 °C {41 °F}** before the charge rate is high enough to be indicated on the charger ohmmeter. For all non-damaged batteries that cannot be charged by this procedure, install a new battery.
- A rapid recharge procedure has been developed for recharging batteries that have passed the Load Test and only need a recharge. This can be due to: in-use no start battery failures (vehicle will not crank due to low battery charge), or the battery has discharged in the vehicle due to key-off drains; refer to the component test.

The battery can be rapidly recharged by using either of the following method:
(1) Perform a **2 h** charge using **20 A** constant current (manual setting on charger)
(2) Perform a **2 h** charge using a constant potential (automatic setting on charger)

GENERATOR REMOVAL/INSTALLATION [L3, AJ]

E6U011718300W01

Warning

- **When the battery cables are connected, touching the vehicle body with generator terminal B generates sparks. This can cause personal injury, fire, and damage to the electrical components. Always disconnect the battery before performing the following operation.**

Caution

- **The generator can be damaged by the heat from the exhaust manifold. Make sure the generator duct and the generator heat insulator are installed securely. (L3 engine model)**

L3

1. Disconnect the negative battery cable.
2. Remove the under cover.
3. Remove the drive belt. (See 01–10A–3 DRIVE BELT REPLACEMENT [L3].)
4. Remove in the order indicated in the table.
5. Install in the reverse order of removal.

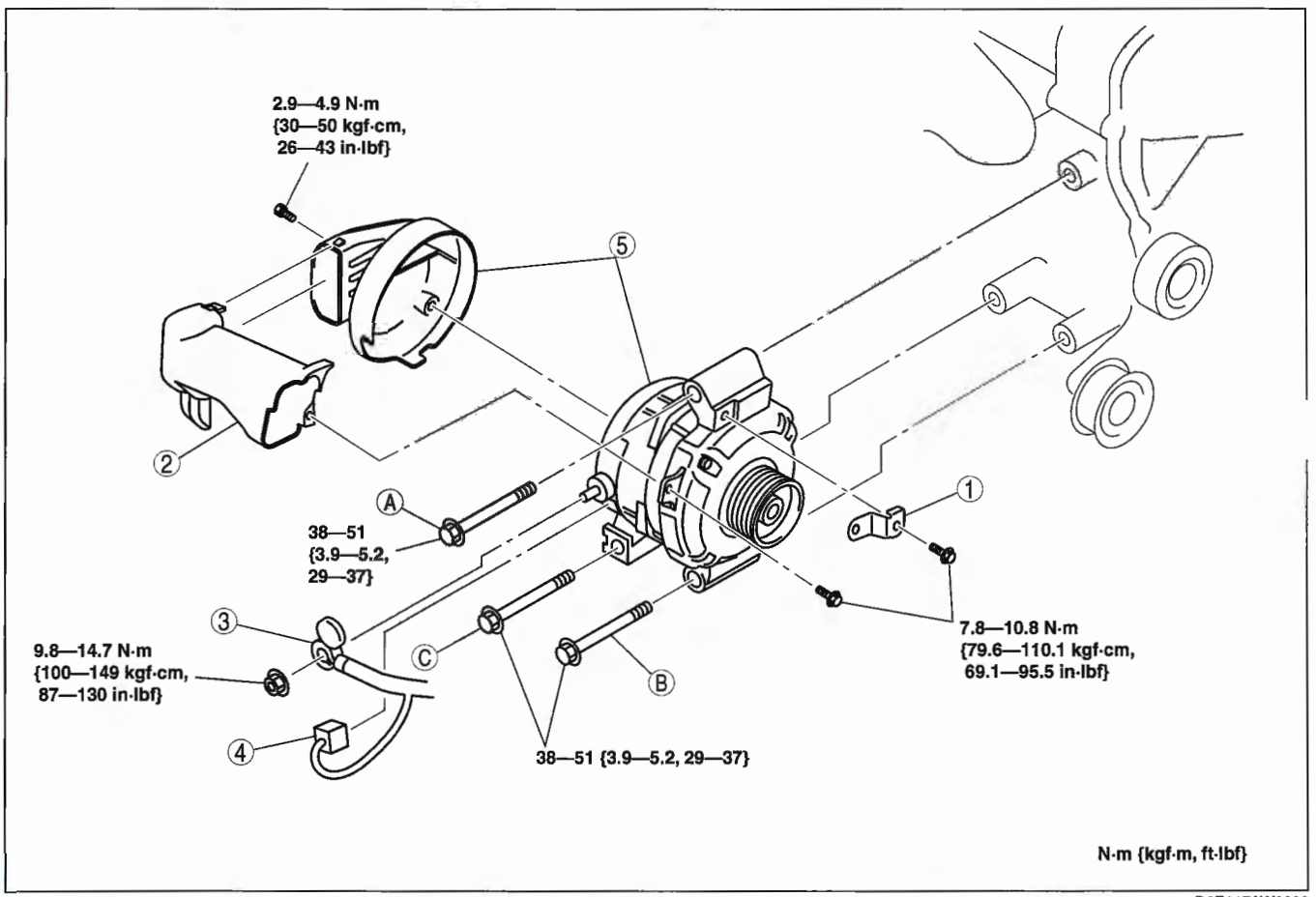

D6E117AW3002

1	Generator bracket
2	Generator duct
3	Terminal B cable
4	Generator connector

5	Generator and generator heat insulator (See 01–17A–5 Generator and Generator Heat Insulator Removal Note (L3).) (See 01–17A–5 Generator and Generator Heat Insulator Installation Note (L3).)

Generator and Generator Heat Insulator Removal Note (L3)

1. Remove the generator and generator heat insulator together from the engine, and position them in the engine compartment in a location where no part can be damaged.
2. Remove the generator heat insulator from the generator.
3. Remove the generator from above the engine compartment.

Generator and Generator Heat Insulator Installation Note (L3)

1. From above the engine compartment, set the generator down inside the engine compartment in a position where no part can be damaged.
2. Install the generator heat insulator to the generator.
3. Install the generator and generator heat insulator together to the engine.
4. Tighten bolt A temporarily.
5. Tighten bolt B, C to the specified tightening torque.
6. Tighten bolt A to the specified tightening torque.

AJ

1. Disconnect the negative battery cable.
2. Remove the under cover.
3. Remove the drive belt. (See 01–10C–4 DRIVE BELT REPLACEMENT [AJ].)
4. Remove the TWC (RH) and the front pipe. (See 01–15C–2 EXHAUST SYSTEM REMOVAL/INSTALLATION [AJ].)
5. Remove in the order indicated in the table.

1	Terminal B wire
2	Connector
3	Generator

6. Install in the reverse order of removal.

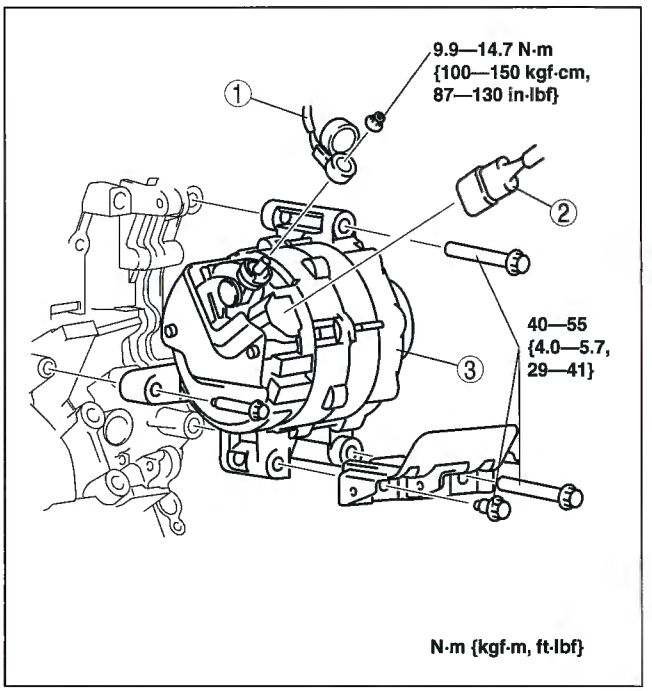

B6U0117W010

GENERATOR INSPECTION [L3, AJ]

E6U011718300W02

Generator Warning Light

1. Verify that the battery is fully charged.
   - Charge if necessary.
2. Verify that the drive belt deflection/tension is within the specification. (L3) (See 01–10A–3 DRIVE BELT INSPECTION [L3].)
3. Turn the ignition switch on and verify that the generator warning light illuminates.
   - If not as specified, inspect generator warning light, wiring harnesses between the battery and the generator warning light.
4. Verify that the generator warning light goes out after the engine is started.
   - If not as specified, inspect if any of the following DTCs are displayed: P0112, P0113, P2502, P2503, P2504. (See 01–02A–11 ON-BOARD DIAGNOSTIC TEST [L3].) (See 01–02C–6 ON-BOARD DIAGNOSTIC TEST [AJ].)

Generator

Voltage

1. Verify that the battery is fully charged.
   - Charge if necessary.
2. Verify that the drive belt deflection/tension is within the specification. (L3) (See 01–10A–3 DRIVE BELT INSPECTION [L3].)
3. Turn off all electrical loads.
4. Turn the ignition switch to start the engine and verify that the generator rotates smoothly without any noise while the engine is running.
5. Measure the voltage at the terminals shown in the table.
   - If not as specified, repair or replace the generator if necessary.

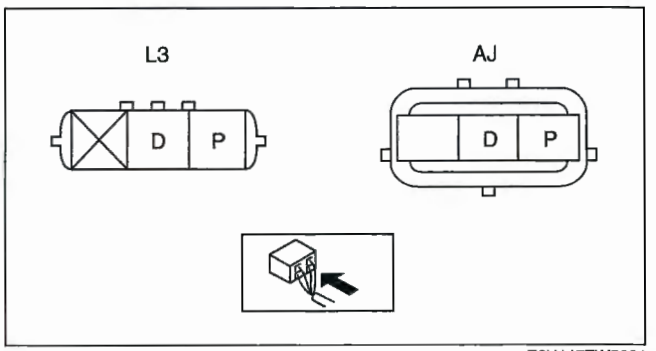

E6U117ZW5001

Standard voltage

Terminal	Ignition switch ON (V)	Idle (V) [20 °C {68 °F}]
B	B+	13—15
P	Approx. 1	Approx. 3—8
D	Approx. 0	*

* : Turn the following electrical loads on and verify that the voltage reading increases.

- Headlights
- Blower motor
- Rear window defroster

Current

Note

- Since the charging current decreases rapidly after starting the engine, perform the following procedure quickly, and read the maximum current value.

1. Verify that the battery is fully charged.
   - Charge if necessary.
2. Verify that the drive belt deflection/tension is within the specification. (L3) (See 01–10A–3 DRIVE BELT INSPECTION [L3].)
3. Disconnect the negative battery cable.
4. Connect a tester cable of reading **120 A or more** between generator terminal B and the wiring harness.
5. Turn off all electrical loads.
6. Start the engine and increase the engine speed to **2,000—2,500 rpm**.
7. Turn the following electrical loads on and verify that the current reading increases.
   (1) Headlights
   (2) Blower motor
   (3) Rear window defroster
   - If generator terminal B current does not increase, repair or replace the generator if necessary.

Note

- Current required for generating power varies with electrical loads applied.

Standard current (Reference)
Measuring conditions:
Room temperature: 20 °C {68 °F}
Voltage: 13.5 V
Engine hot

Engine speed (rpm)	Terminal B current (A)*	
	L3	AJ
1,000	0*—80	0*—90
2,000	0*—100	0*—105

* : Lower limit of current must be more than 0 A.

Generator Inner Parts

Rotor

1. Measure the resistance between the slip rings using a tester.
   - If not within the specification, replace the rotor.

Specification [20 °C {68 °F}]
L3: 2.0—2.3 ohm
AJ: 2.4—2.9 ohm

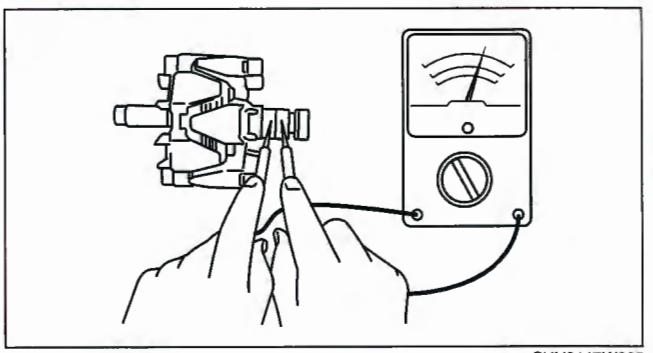

CHU0117W005

2. Verify that there is no continuity between the slip ring and core using a tester.
   - If there is continuity, replace the rotor.
3. Inspect the slip ring surface condition.
   - If the slip ring surface is rough, use a lathe or fine sandpaper to repair it.

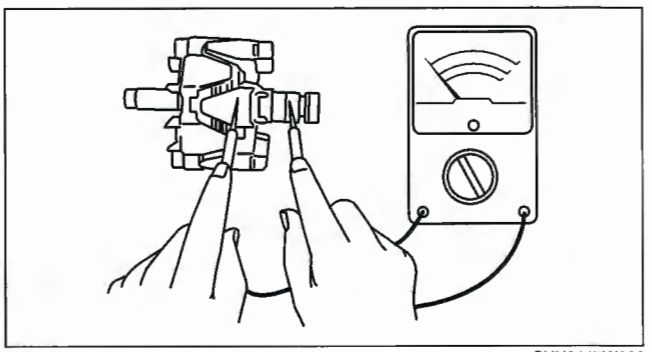

CHU0117W006

Stator coil (L3)

1. Verify that the continuity is as indicated in the table.

O—O : Continuity

Terminal					
1	2	3	4	5	6
O—O					
O———O					
	O—O				
			O—O		
			O———O		
				O—O	

E6U117ZWB006

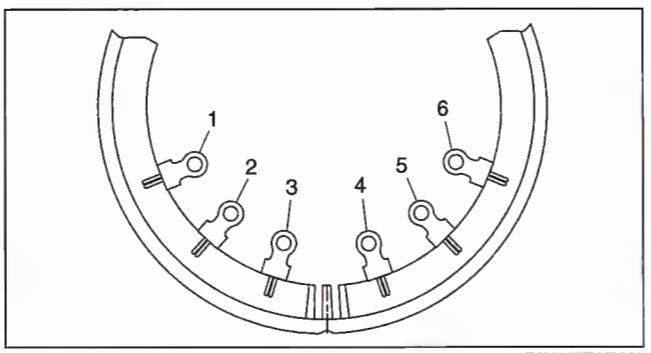

E6U117ZWB005

   - If there is any malfunction, replace the stator.
2. Verify that there is no continuity between the stator coil leads and core using a tester.
   - If there is continuity, replace the stator coil.

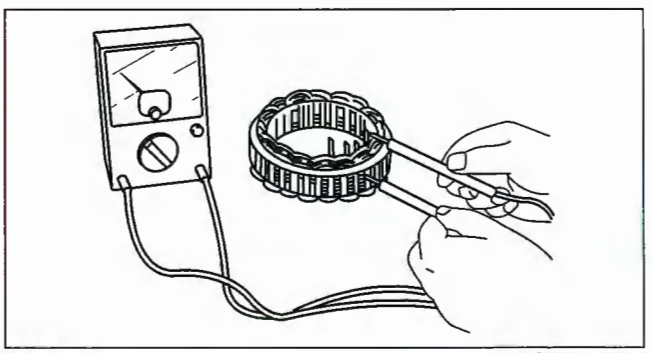

CHU0117W008

Stator coil (AJ)

1. Verify that the continuity is as indicated in the table.

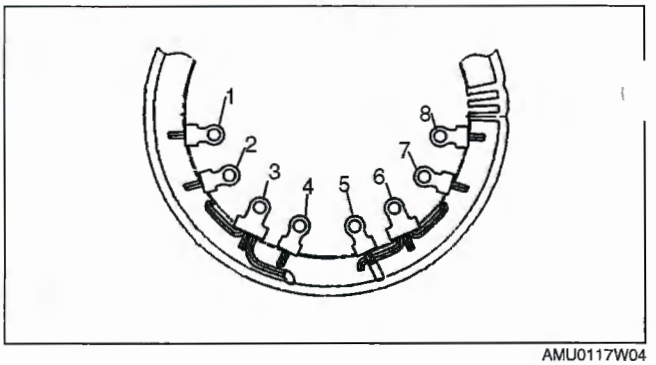

AMU0117W04

○—○ : Continuity

Terminal							
1	2	3	4	5	6	7	8
○		○					
	○	○					
		○		○			
			○		○		
					○	○	
					○		○

B6U0117W01

- If there is any malfunction, replace the stator.

2. Verify that there is no continuity between the stator coil leads and core using a tester.
   - If there is continuity, replace the stator coil.

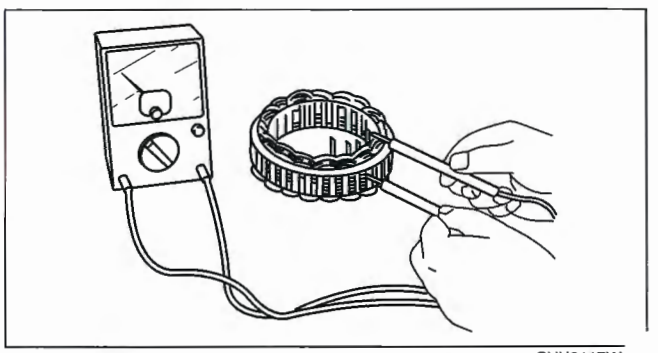
CHU0117W

Brush

1. Inspect brushes for wear.
   - If any brush is worn almost to or beyond the limit, replace all of the brushes.

Standard
22.5 mm {0.89 in}
Minimum
5.0 mm {0.20 in}

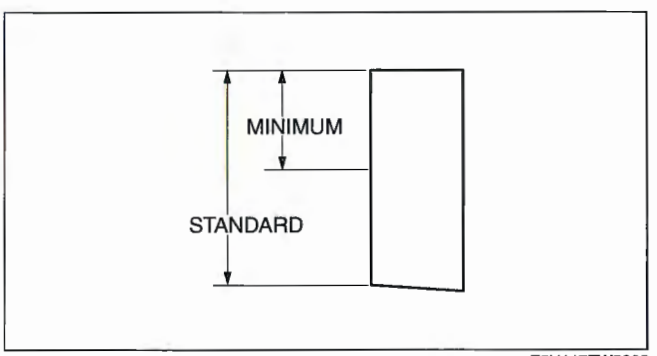

E5U117ZW5005

Brush spring

1. Measure the force of the brush spring using a spring pressure gauge.
2. Read the spring pressure gauge at the brush tip projection of **2 mm {0.079 in}**.
   - Replace the brush spring if necessary.

Standard force
4.1—5.3 N {0.42—0.54 kgf, 0.92—1.19 lbf}
Minimum
1.7 N {0.17 kgf, 0.38 lbf}

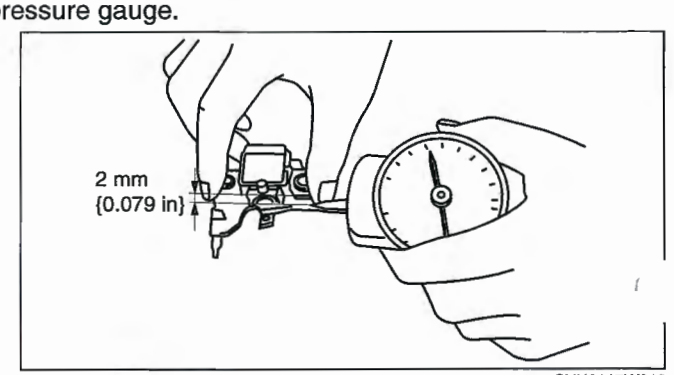

CHU0117W010

Rectifier (Using an analog circuit tester)

1. Inspect for continuity of the diodes using an analog circuit tester.

L3

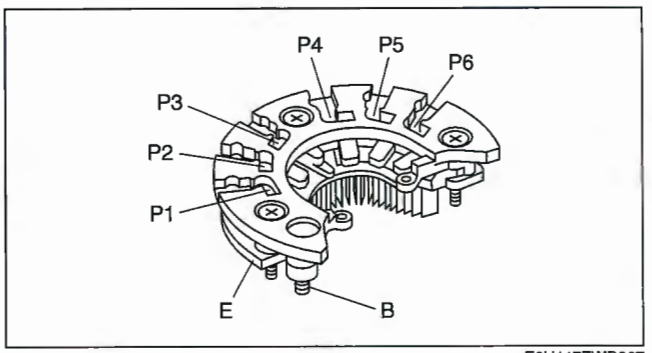

E6U117ZWB007

AJ

- If not as specified, replace the rectifier.

Specification

Negative	Positive	Continuity
E	P1, P2, P3, P4, P5, P6	Yes
B		No
P1, P2, P3, P4, P5, P6	E	No
	B	Yes

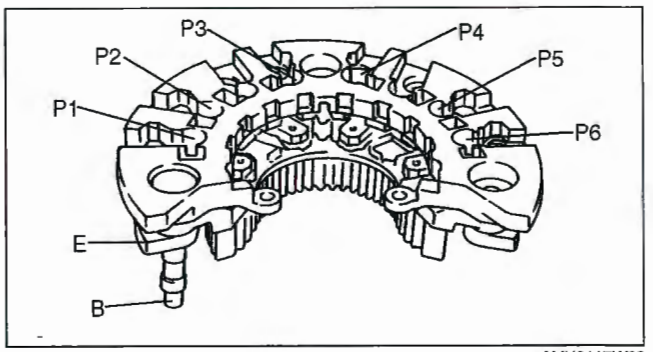

AMU0117W03

Rectifier (Using a digital circuit tester)

1. Inspect for continuity of the diodes using a digital circuit tester.
   - If not as specified, replace the rectifier.

Specification

Negative	Positive	Continuity
E	P1, P2, P3, P4, P5, P6	No
B		Yes
P1, P2, P3, P4, P5, P6	E	Yes
	B	No

Bearing

1. Inspect for abnormal noise, looseness, and sticking.
   - Replace the bearing if necessary.

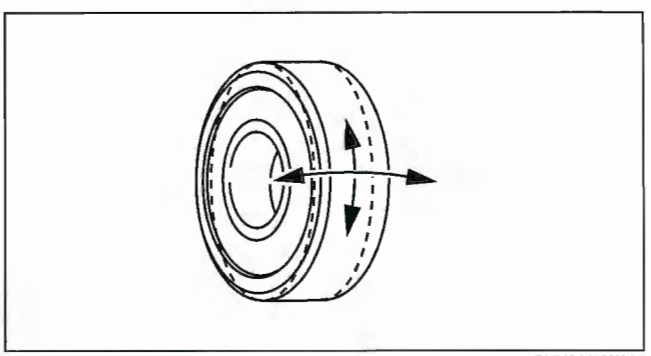

CHU0117W015

GENERATOR DISASSEMBLY/ASSEMBLY [L3, AJ]

E6U011718300W03

Caution
- **Melt the solder quickly, otherwise the diodes (rectifier) and regulator will be damaged by excessiv heat.**

L3

1. Disassemble in the order indicated in the table.
2. Assemble in the reverse order of disassembly.

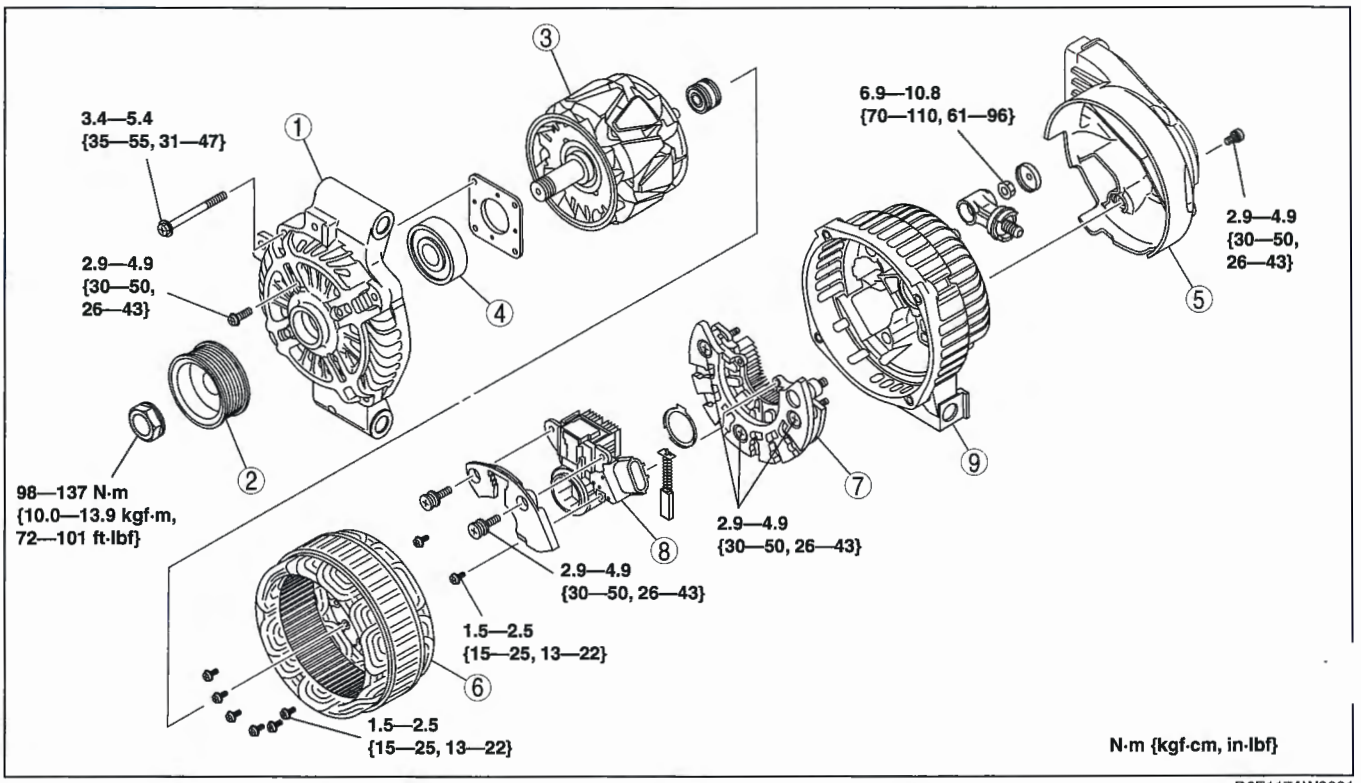

D6E117AW3001

1	Front cover
2	Pulley
3	Rotor
4	Bearing
5	Generator heat insulator

6	Stator coil
7	Rectifier
8	Brush holder
9	Rear bracket

AJ

1. Disassemble in the order indicated in the table.
2. Assemble in the reverse order of disassembly.

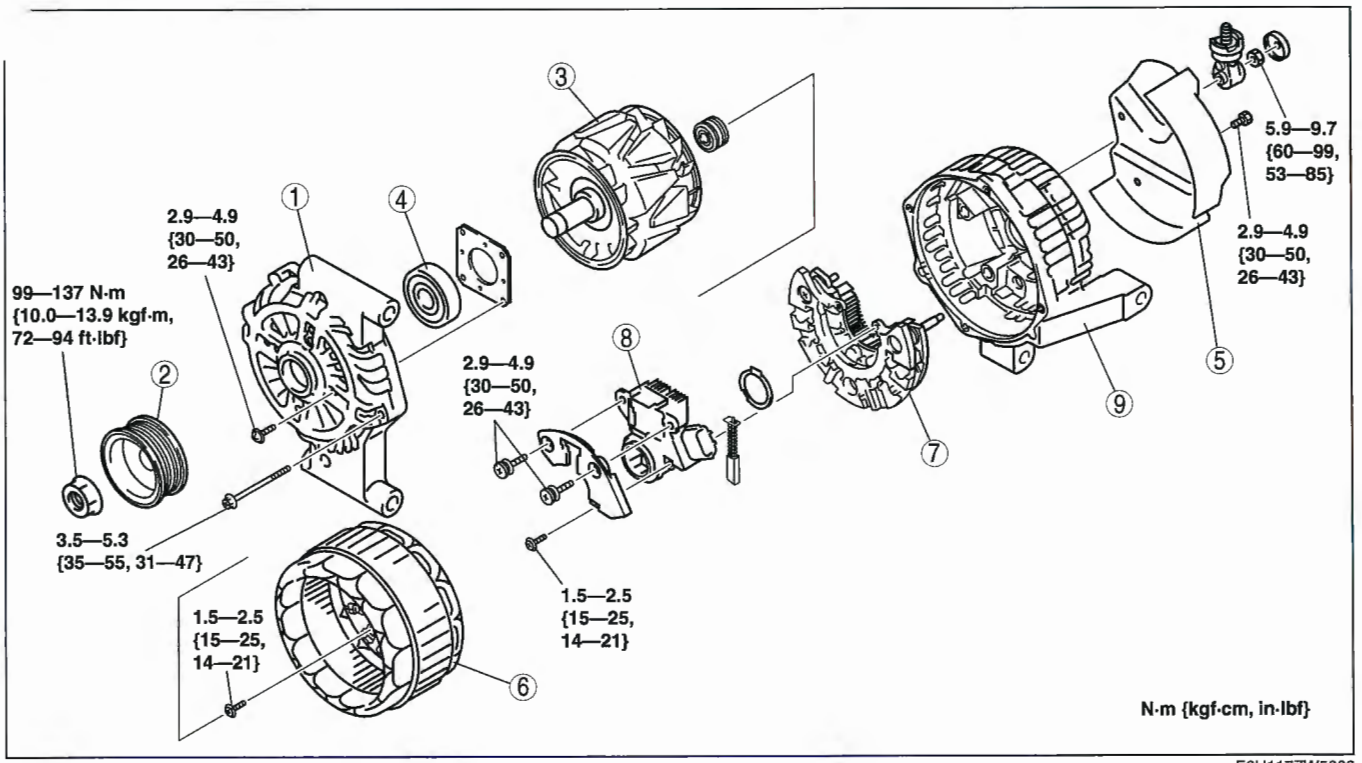

E6U117ZW5002

1	Front cover
2	Pulley
3	Rotor
4	Bearing
5	Generator heat insulator

6	Stator coil
7	Rectifier
8	Brush holder
9	Rear bracket

01–17B CHARGING SYSTEM [L3 WITH TC]

CHARGING SYSTEM LOCATION INDEX [L3 WITH TC] 01–17B–1
BATTERY REMOVAL/INSTALLATION [L3 WITH TC] 01–17B–2
Battery Box Installation Note 01–17B–2
BATTERY INSPECTION [L3 WITH TC] 01–17B–2
Electrolyte specific gravity 01–17B–2
Battery voltage 01–17B–3
Back-up current 01–17B–3
BATTERY RECHARGING [L3 WITH TC] 01–17B–4
GENERATOR REMOVAL/INSTALLATION [L3 WITH TC] 01–17B–4
Generator Removal Note 01–17B–5
Generator Installation Note 01–17B–5
GENERATOR INSPECTION [L3 WITH TC] 01–17B–6
Generator Warning Light 01–17B–6
Generator 01–17B–6
Generator Inner Parts 01–17B–7
GENERATOR DISASSEMBLY/ASSEMBLY [L3 WITH TC] 01–17B–9
Pulley Disassembly/Assembly Note ... 01–17B–10

CHARGING SYSTEM LOCATION INDEX [L3 WITH TC]

E6U011700000W01

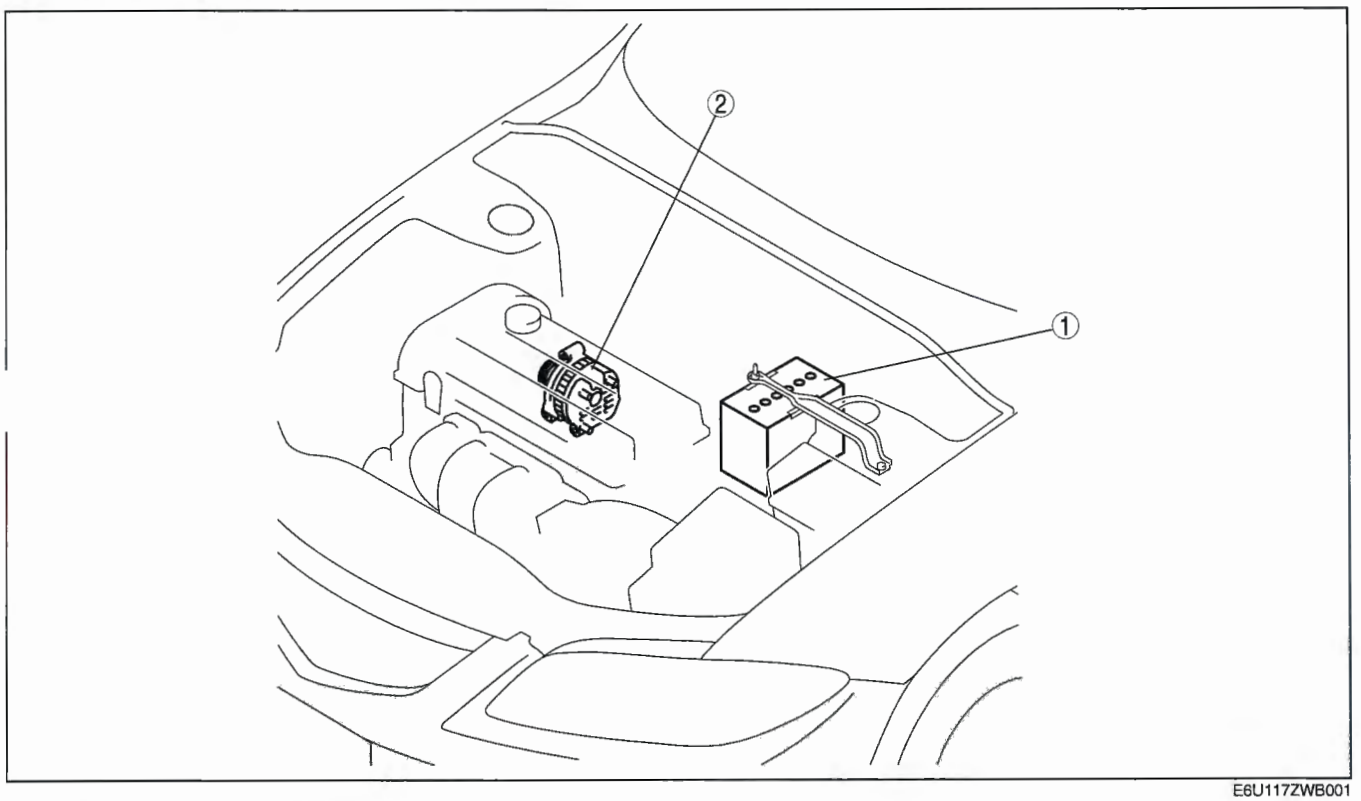

E6U117ZWB001

1	Battery (See 01–17B–2 BATTERY REMOVAL/INSTALLATION [L3 WITH TC].) (See 01–17B–2 BATTERY INSPECTION [L3 WITH TC].) (See 01–17B–4 BATTERY RECHARGING [L3 WITH TC].)

2	Generator (See 01–17B–4 GENERATOR REMOVAL/INSTALLATION [L3 WITH TC].) (See 01–17B–6 GENERATOR INSPECTION [L3 WITH TC].) (See 01–17B–9 GENERATOR DISASSEMBLY/ASSEMBLY [L3 WITH TC].)

BATTERY REMOVAL/INSTALLATION [L3 WITH TC]

E6U011718520W04

1. Remove in the order indicated in the table.

1	Negative battery cable
2	Positive battery cable
3	Battery clamp
4	Battery box (See 01–17B–2 Battery Box Installation Note.)
5	Battery
6	Battery tray

2. Install in the reverse order of removal.

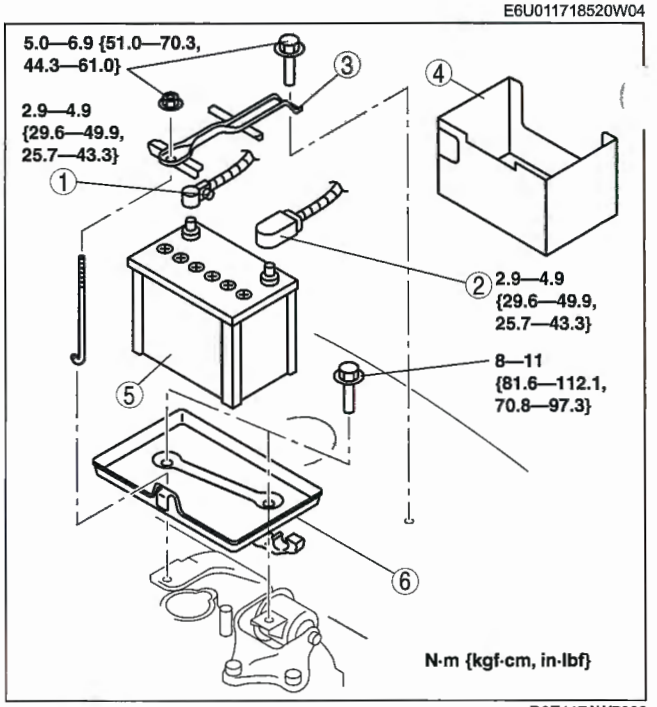

D6E117AW7002

Battery Box Installation Note

1. Install the battery box so that the side with the larger notch faces toward the front fender (LH).

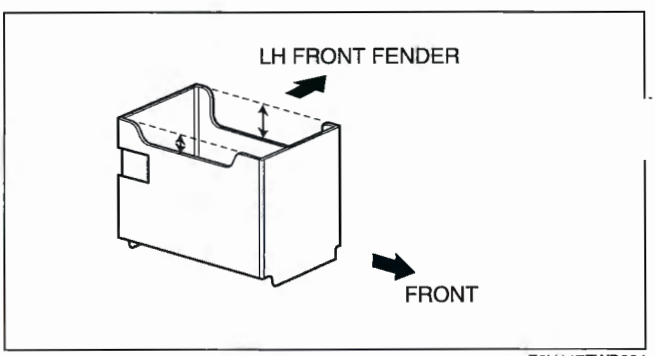

E6U117ZWB004

BATTERY INSPECTION [L3 WITH TC]

E6U011718520W05

Warning

- **Since battery acid is toxic, be careful when handling the battery.**
- **Since battery acid is highly corrosive, be careful not to allow it to contact clothing or the vehicle.**
- **In case battery acid contacts skin, eyes, or clothing, flush it immediately with running water. Especially if the acid gets in the eyes, flush with water for more than 15 min and get prompt medical attention.**

Electrolyte specific gravity

1. Measure the electrolyte specific gravity using a hydrometer.
   - If it is less than the specification, recharge the battery. (See 01–17B–4 BATTERY RECHARGING [L3 WITH TC].)

Battery electrolyte specific gravity [20 °C {68 °F}]
1.22—1.29

Battery voltage

1. Inspect the battery as follows:

Step	Inspection		Action
1	Measure the battery positive voltage.	12.4 V or more	Go to Step 3.
		Less than 12.4 V	Go to the next step.
2	Quick charge for **30 min** and recheck voltage.	12.4 V or more	Go to the next step.
		Less than 12.4 V	Replace the battery.
3	Using the battery load tester, apply load current (see battery load test current) and record battery voltage after **15 s**. Is voltage more than the specification?	Yes	Normal
		No	Replace the battery.

Battery load test current
55D23L (48): 180 A
80D26L (55): 195 A

Standard specification

Battery temp. (°C {°F})	Minimum voltage (V)
4 {39}	9.3
10 {50}	9.4
16 {61}	9.5
21 {70}	9.6

Back-up current

1. Verify that the ignition switch is off (key has been removed) and that all doors are closed.
2. Disconnect the negative battery cable.
3. Connect the tester between the negative battery terminal and negative battery cable, leave the battery undisturbed for **15 min**, and then measure the back-up current.
   - If not within the specification, measure the back-up current while removing the fuses one by one from the inside of the main fuse block and the inside of the fuse block.

Note
- If the battery is not left undisturbed for **15 min**, the tester will indicate a high value (**approx. 300 mA**).
- If the key or any electrical accessory is operated within **approx. 15 min** after the tester is connected, the battery must be left undisturbed for **approx. 15 min** from that point.

Caution
- **Operating electrical loads while the back-up current is being measured can damage the tester.**

Note
- For vehicles with the immobilizer system, the system periodically shifts synchronization of the security light flashing. Therefore, **45 mA (0.1 s)** current is supplied when the security light is illuminated, and **25 mA (2 s)** current is supplied when the security light is not illuminated. In addition, the measuring instrument, which shows the average value, indicates around **30 mA**.

Battery back-up current
Vehicles with immobilizer system: 25—45 mA
Vehicles without immobilizer system: 30 mA or less

4. Inspect and repair wiring harnesses and connectors of the fuse where the current has decreased.

BATTERY RECHARGING [L3 WITH TC]

E6U011718520W06

Warning
- **Keep all flames away from the battery, otherwise evaporated gas from the battery fluid may catch fire, and cause serious injury.**
- **Remove the battery filler caps when recharging to prevent battery deformation or damage.**

Caution
- **Do not quick charge for more than 30 min. It will damage the battery.**

1. Remove the battery and then place it in a pan of water.
2. Connect a battery charger to the battery and adjust the charging current as follows.

Battery slow charge current
55D23L (48): 4.5—5.5 A
80D26L (55): 5.5—6.5 A

Battery quick charge current [30 min]
55D23L (48): 30 A
80D26L (55): 35 A

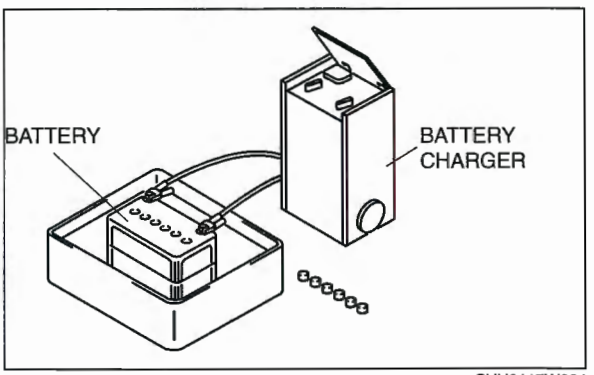

CHU0117W004

3. After the battery is recharged, verify that the voltage is within the specification and remains at the same value for **1 h or more** after the recharging has been completed.
   - If not within the specification, replace the battery.

Standard voltage
12.4 V or more

GENERATOR REMOVAL/INSTALLATION [L3 WITH TC]

E6U011718300W0

Warning
- **When the battery cables are connected, touching the vehicle body with generator terminal B will generate sparks. This can cause personal injury, fire, and damage to the electrical components. Always disconnect the battery negative cable before performing the following operation.**

Caution
- **The generator can be damaged by the heat from the exhaust manifold. Make sure the generator duct is installed securely.**

1. Disconnect the negative battery cable.
2. Remove the under cover.
3. Remove the drive belt. (See 01–10B–3 DRIVE BELT REPLACEMENT [L3 WITH TC].)
4. Remove the charge air cooler cover. (See 01–13B–4 INTAKE AIR SYSTEM REMOVAL/INSTALLATION [L3 WITH TC].)
5. Remove the cowl panel. (See 09–10–17 COWL PANEL REMOVAL/INSTALLATION.)
6. Remove in the order indicated in the table.

7. Install in the reverse order of removal.

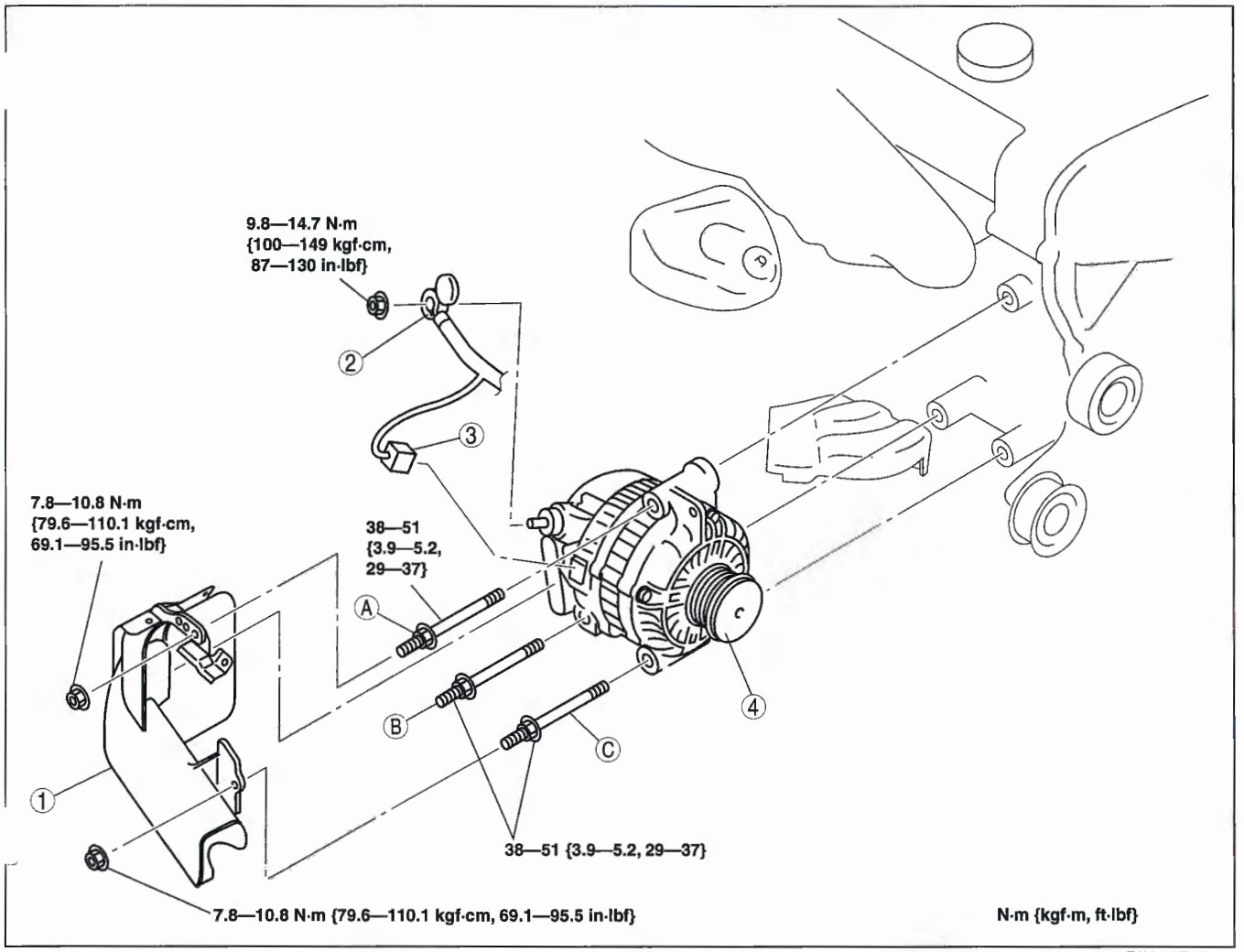

E6U117ZWB009

1	Generator duct
2	Terminal B cable
3	Generator connector

4	Generator (See 01–17B–5 Generator Removal Note.) (See 01–17B–5 Generator Installation Note.)

Generator Removal Note

1. Remove the generator from above the engine compartment.

Generator Installation Note

1. Tighten bolt A temporarily.
2. Tighten bolt B, C to the specified tightening torque.
3. Tighten bolt A to the specified tightening torque.

GENERATOR INSPECTION [L3 WITH TC]

E6U011718300W05

Generator Warning Light

1. Verify that the battery is fully charged.
   - Charge if necessary.
2. Verify that the drive belt deflection/tension is within the specification. (See 01–10B–3 DRIVE BELT INSPECTION [L3 WITH TC].)
3. Turn the ignition switch on and verify that the generator warning light illuminates.
   - If not as specified, inspect the generator warning light, and wiring harnesses between the battery and the generator warning light.
4. Verify that the generator warning light goes out after the engine is started.
   - If not as specified, inspect if any of the following DTCs are displayed: P0112, P0113, P2502, P2503, P2504. (See 01–02B–14 DTC TABLE [L3 WITH TC].)

Generator

Voltage

1. Verify that the battery is fully charged.
   - Charge if necessary.
2. Verify that the drive belt deflection/tension is within the specification. (See 01–10B–3 DRIVE BELT INSPECTION [L3 WITH TC].)
3. Turn off all electrical loads.
4. Turn the ignition switch to start the engine and verify that the generator rotates smoothly without any noise while the engine is running.
5. Measure the voltage at each terminal using a tester.
   - If not as specified, repair or replace the generator if necessary.

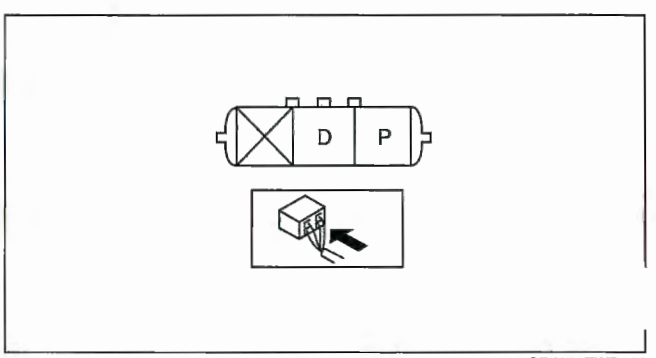

CPJ117ZWB006

Generator standard voltage [IG-ON]
Terminal B: B+
Terminal P: Approx. 1 V
Terminal D: Approx. 0 V

Generator standard voltage [Idle, 20 °C {68 °F}]
Terminal B: 13—15 V
Terminal P: Approx. 3—8 V
Terminal D: Turn the electrical loads (headlights, blower motor, rear window defroster) on and verify that the voltage reading increases.

Current

Note
- Since the charging current decreases rapidly after starting the engine, perform the following procedure quickly, and read the maximum current value.

1. Verify that the battery is fully charged.
   - Charge if necessary.
2. Verify that the drive belt deflection/tension is within the specification. (See 01–10B–3 DRIVE BELT INSPECTION [L3 WITH TC].)
3. Disconnect the negative battery cable.
4. Connect a tester, which can read **120 A or more,** between generator terminal B and the wiring harness.
5. Turn off all electrical loads.
6. Start the engine and increase the engine speed to **2,000—2,500 rpm.**
7. Turn the following electrical loads on and verify that the current reading increases.
   (1) Headlights
   (2) Blower motor
   (3) Rear window defroster
      - If generator terminal B current does not increase, repair or replace the generator if necessary.

Note
- Current required for generating power varies with the electrical loads applied.

Generator generated current (reference value) [Conditions] Ambient temperature: 20 °C {68 °F}, Voltage: 13.5 V, Engine hot

Engine speed (rpm)	Terminal B current (Lower limit of current must be more than 0 A.)
1,000	0—80 A
2,000	0—100 A

Generator Inner Parts

Rotor

1. Measure the resistance between the slip rings using a tester.
   - If not within the specification, replace the rotor.

   Generator rotor resistance (between slip rings) [20 °C {68 °F}]
   2.0—2.3 ohm

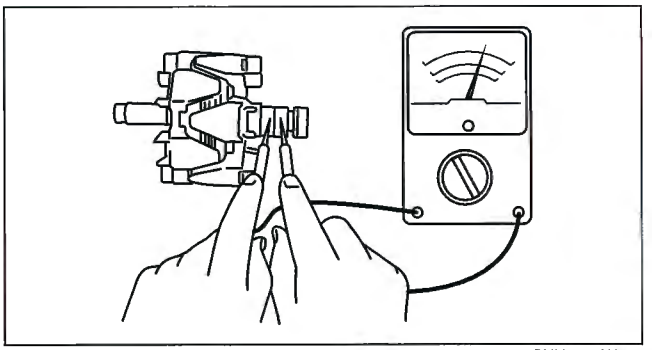

CHU0117W005

2. Verify that there is no continuity between the slip ring and core using a tester.
   - If there is continuity, replace the rotor.
3. Inspect the slip ring surface condition.
   - If the slip ring surface is rough, use a lathe or fine sandpaper to smooth it.

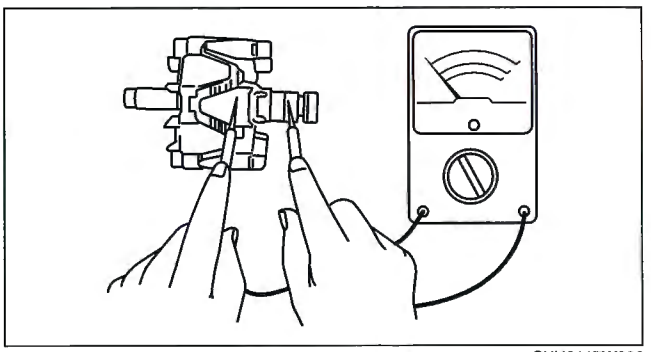

CHU0117W006

Stator coil

1. Verify that the continuity is as indicated in the table.

O—O : Continuity

Terminal					
1	2	3	4	5	6
O—O					
O		O			
	O—O				
			O—O		
			O		O
				O—O	

E6U117ZWB006

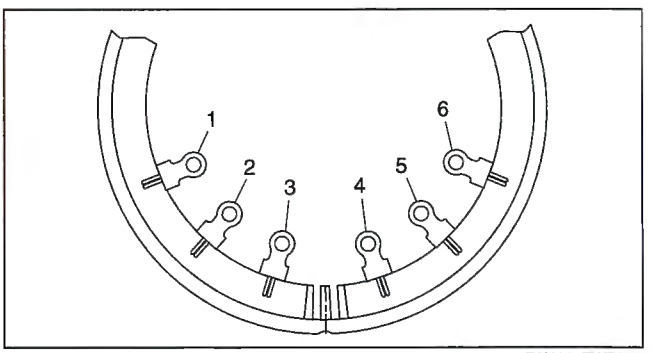

E6U117ZWB005

   - If there is any malfunction, replace the stator.
2. Verify that there is no continuity between the stator coil leads and core using a tester.
   - If there is continuity, replace the stator coil.

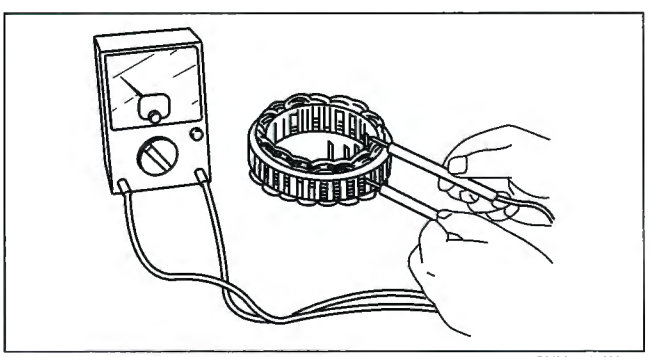

CHU0117W008

Brush

1. Inspect brushes for wear.
   - If any brush is worn almost to or beyond the limit, replace all of the brushes.

Generator brush length
Standard: 22.5 mm {0.89 in}
Minimum: 5.0 mm {0.20 in}

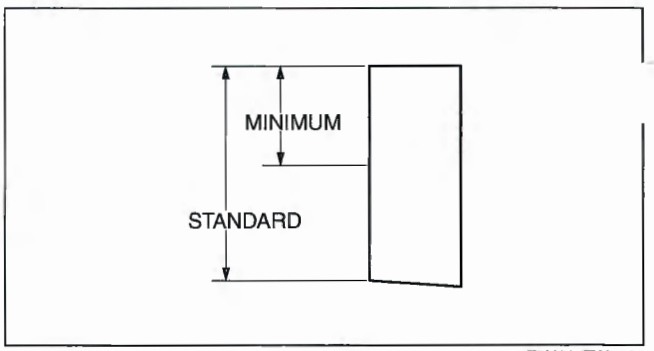

E5U117ZW5005

Brush spring

1. Measure the force of the brush spring using a spring pressure gauge.
2. Read the spring pressure gauge at the brush tip projection of **2 mm {0.079 in}**.
   - Replace the brush spring if necessary.

Generator brush spring force
Standard: 4.1—5.3 N {0.42—0.54 kgf, 0.92—1.19 lbf}
Minimum: 1.7 N {0.17 kgf, 0.38 lbf}

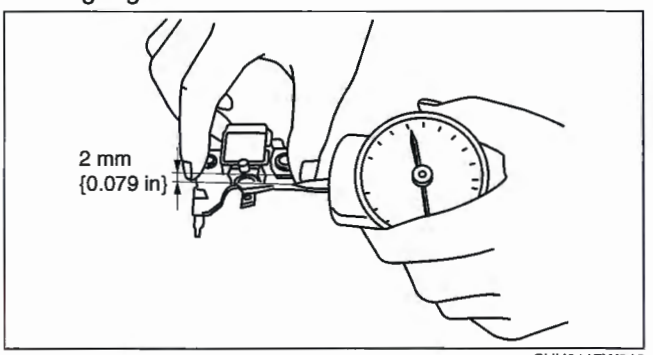

CHU0117W010

Rectifier (Using an analog circuit tester)

1. Inspect for continuity of the diodes using an analog circuit tester.
   - If not as specified, replace the rectifier.

Specification

Negative	Positive	Continuity
E	P1, P2, P3, P4, P5, P6	Yes
B		No
P1, P2, P3, P4, P5, P6	E	No
	B	Yes

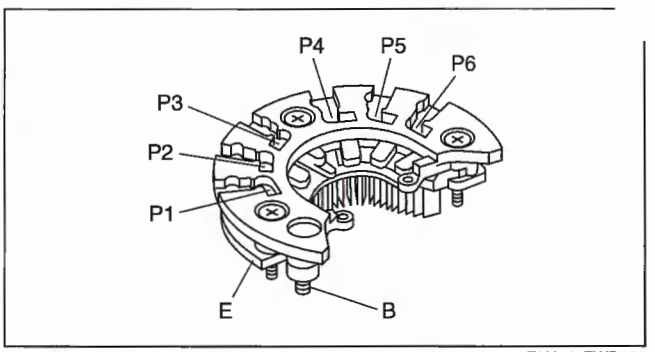

E6U117ZWB007

Rectifier (Using a digital circuit tester)

1. Inspect for continuity of the diodes using a digital circuit tester.
   - If not as specified, replace the rectifier.

Specification

Negative	Positive	Continuity
E	P1, P2, P3, P4, P5, P6	No
B		Yes
P1, P2, P3, P4, P5, P6	E	Yes
	B	No

Bearing

1. Inspect for abnormal noise, looseness, and sticking.
   - Replace the bearing if necessary.

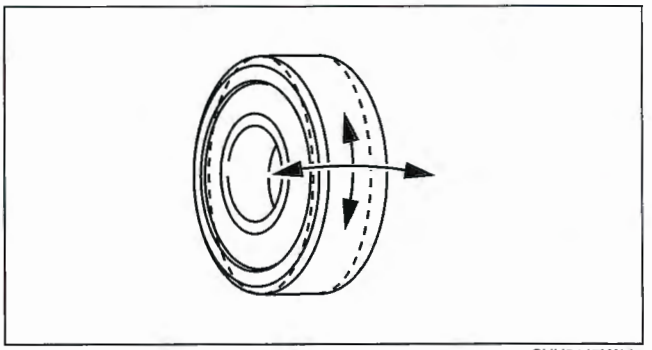

CHU0117W015

GENERATOR DISASSEMBLY/ASSEMBLY [L3 WITH TC]

E6U011718300W06

Caution

- **Melt the solder quickly, otherwise the diodes (rectifier) and regulator will be damaged by excessive heat.**

1. Disassemble in the order indicated in the table.
2. Assemble in the reverse order of disassembly.

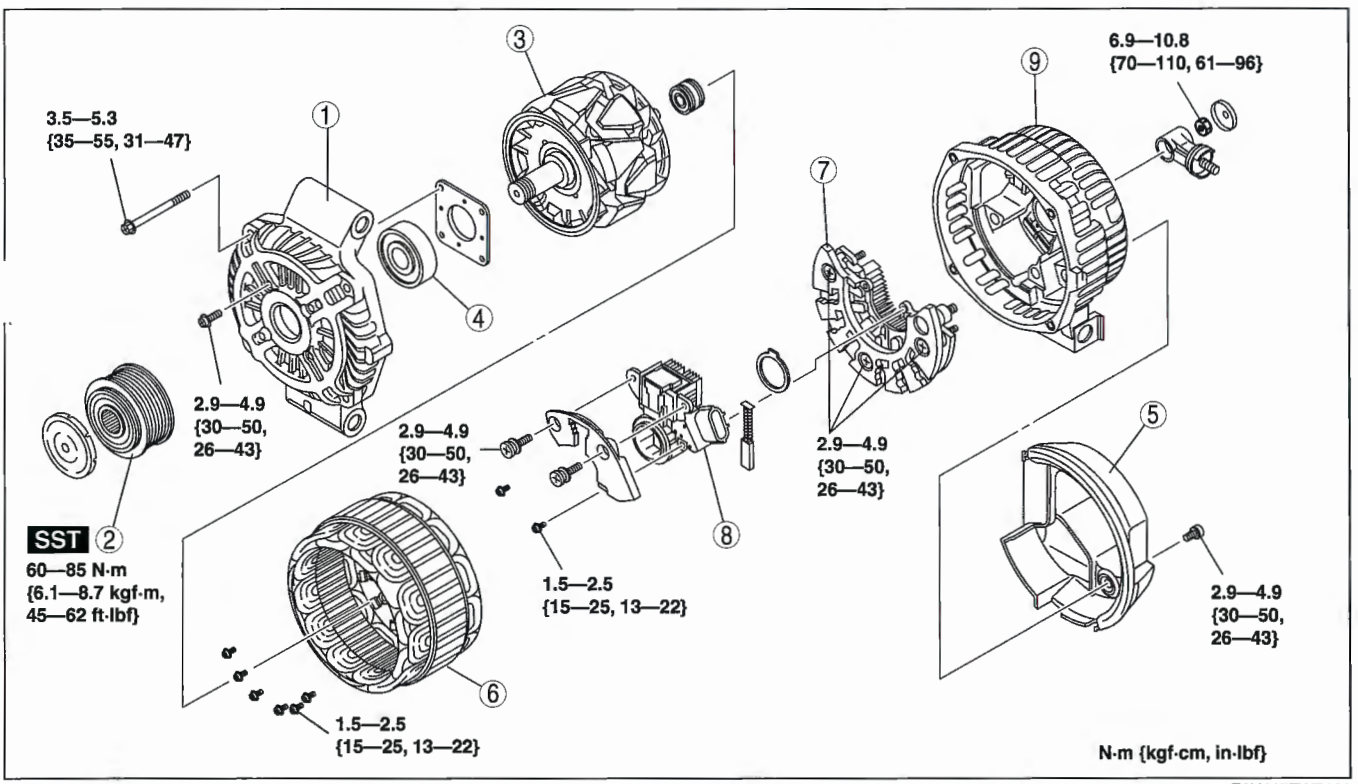

E6U117ZWB008

1	Front cover
2	Pulley (See 01–17B–10 Pulley Disassembly/Assembly Note.)
3	Rotor
4	Bearing
5	Generator heat insulator

6	Stator coil
7	Rectifier
8	Brush holder
9	Rear bracket

Pulley Disassembly/Assembly Note

1. Disassemble/assemble the pulley using the **SST**.

Tightening torque
60—85 N·m {6.1—8.7 kgf·m, 45—62 ft·lbf}

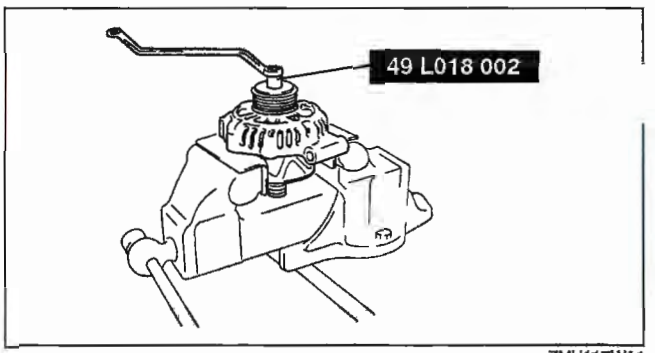

ZMU117WA1

01–18A IGNITION SYSTEM [L3, AJ]

IGNITION COIL
REMOVAL/INSTALLATION
[L3, AJ] 01–18A–2
L3 ..... 01–18A–2
AJ 01–18A–2
IGNITION COIL INSPECTION
[L3, AJ] 01–18A–3
L3 ..... 01–18A–3
AJ 01–18A–3
SPARK PLUG
REMOVAL/INSTALLATION
[L3, AJ] 01–18A–4
SPARK PLUG INSPECTION
[L3, AJ] 01–18A–5
Plug Gap Inspection 01–18A–5
Cleaning 01–18A–5
Visual inspection 01–18A–5
Resistance Inspection 01–18A–5

IGNITION COIL REMOVAL/INSTALLATION [L3, AJ]

E6U011818100W01

L3

1. Disconnect the negative battery cable.
2. Remove the plug hole plate.
3. Remove in the order indicated in the table.

1	Connector
2	Ignition coil

4. Install in the reverse order of removal.

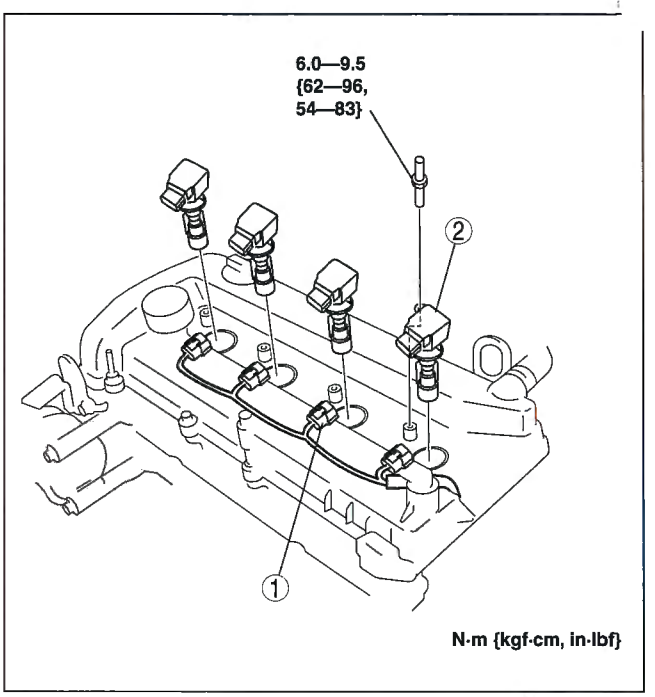

DPE118AW1001

AJ

1. Disconnect the negative battery cable.
2. LH: Remove the plug hole plate. (See 01–10C–6 TIMING CHAIN REMOVAL/INSTALLATION [AJ].)
   RH: Remove the dynamic chamber. (See 01–13C–2 INTAKE AIR SYSTEM REMOVAL/INSTALLATION [AJ].)
3. Remove in the order indicated in the table.

1	Connector
2	Ignition coil

4. Install in the reverse order of removal.

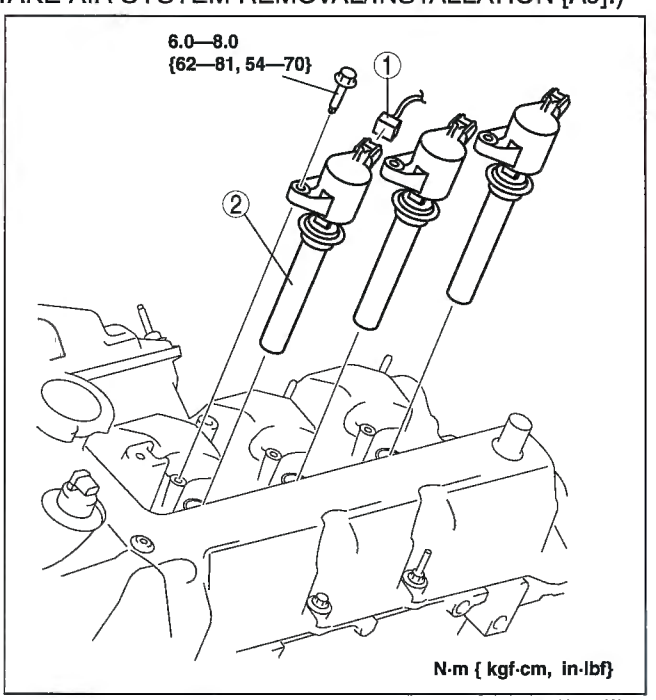

B6U0118W101

IGNITION COIL INSPECTION [L3, AJ]

E6U011818100W02

L3

Ignition coil inspection

1. Perform the spark test and identify the malfunctioning cylinder.
2. Replace the ignition coil of the malfunctioning cylinder with that of a normal cylinder, and reperform the spark test.
   - If the spark is not normal due to a malfunctioning ignition coil, replace that ignition coil.
   - It is unlikely that all four ignition coils fail to operate properly. To prevent replacing a normal component, perform the above procedure, identify the malfunctioning ignition coil, and replace it.

Ignition coil with built-in igniter inspection

1. Disconnect the ignition coil connector.
2. Measure the resistance between each terminal on the ignition coil connector using an analog circuit tester.
   - If the measurement corresponds to the table, replace the ignition coil.

Item	Tester Connection Position		Condition
	Positive	Negative	
Terminal	C	A	0 ohm is not normal (∞ ohm is normal)
	A	C	
	C	B	
	B	C	
	A	B	∞ or 0 ohm is not normal (several kilohm is normal)
	B	A	

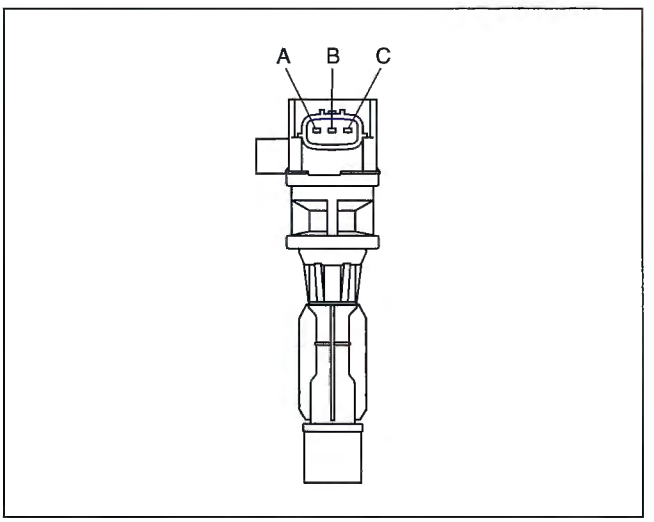

CPJ118ZWB003

AJ

Primary coil winding

1. Disconnect the ignition coil connector. (See 01–18A–2 IGNITION COIL REMOVAL/INSTALLATION [L3, AJ].)
2. Measure the resistance between terminal A and B using a tester.
   - If not within the specification, replace the ignition coil.

Specification
0.45—1.15 ohms [25 °C {77 °F}]

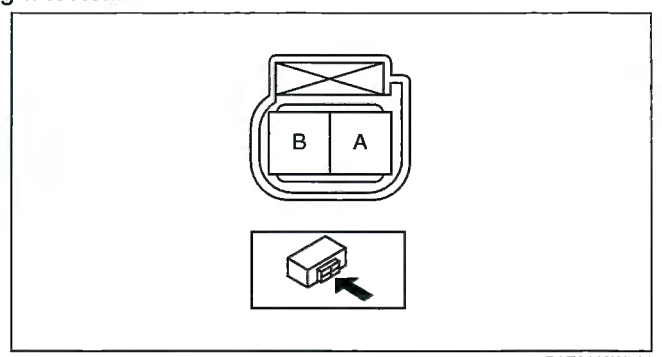

B3E0118W066

Secondary coil winding

1. Remove the ignition coil. (See 01–18A–2 IGNITION COIL REMOVAL/INSTALLATION [L3, AJ].)
2. Measure the resistance between terminal A to ignition coil boot socket using a tester.
   - If not within the specification, replace the ignition coil.

Specification
5.0—6.0 kilohms [25 °C {77 °F}]

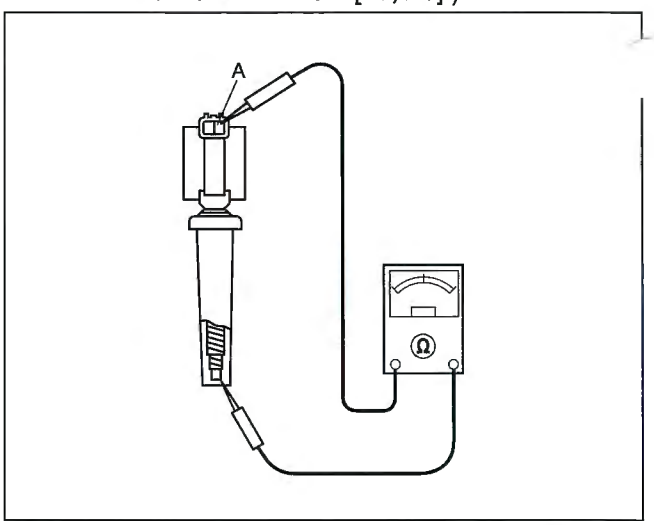

B3E0118W011

Insulation resistance of case

1. Disconnect the ignition coil connector. (See 01–18A–2 IGNITION COIL REMOVAL/INSTALLATION [L3, AJ].)
2. Measure the insulation resistance between terminal A to ignition coil case using a tester.
   - If not as specified, replace the ignition coil.

Specification
10 megohms or more

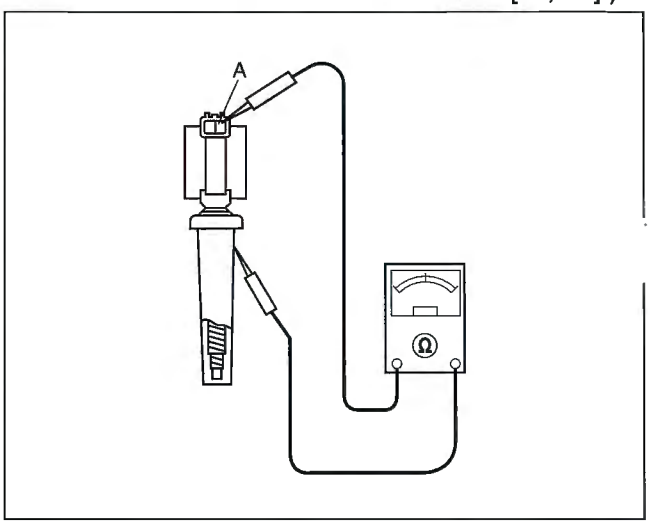

B3E0118W012

SPARK PLUG REMOVAL/INSTALLATION [L3, AJ]

E6U011818110W01

Caution
- **If a spark plug that is not as specified is installed, engine performance will be deteriorated. Install only the specified spark plug when replacing.**

1. Disconnect the negative battery cable.
2. Remove the ignition coils. (See 01–18A–2 IGNITION COIL REMOVAL/INSTALLATION [L3, AJ].)
3. Remove the spark plugs using a plug-wrench.
4. Install in the reverse order of removal.

Tightening torque
L3: 10—14 N·m {1.1—1.4 kgf·m, 8.0—10.3 ft·lbf}
AJ: 9—20 N·m {91—204 kgf·cm, 79—177 in·lbf}

SPARK PLUG INSPECTION [L3, AJ]

E6U011818110W02

Plug Gap Inspection

Caution
- **To avoid possible damage to the tip, do not adjust the plug gap.**
- **To prevent damaging the tip, use a wire type plug gap gauge when inspecting the plug gap.**

1. Measure the spark plug gap using a wire type plug gap gauge.
   - If it exceeds the specification, replace the spark plug.

Standard plug gap
L3: 1.25—1.35 mm {0.050—0.053 in}
AJ: 1.29—1.45 mm {0.051—0.057 in}

Cleaning

Caution
- **Carbon may adhere to the tip of the spark plug during vehicle delivery or repeated short distance driving during the winter time. If there is any malfunction such as rough idling or start difficulty due to carbon adhesion causing plug fouling, burn off the carbon by performing no-load racing of the engine.**
- **When performing the no-load racing, apply the side brake and foot brake, move the shift lever to neutral (MTX), or the selector lever to P position (ATX) to prevent an accident and serious injury.**
- **To avoid possible damage to the spark plug tip, do not use a wire brush for cleaning.**

Note
- To avoid possible damage to the tip, use gasoline to clean the spark plugs after removing dirt.

1. If there is carbon adhering to the spark plug, perform no-load racing at **3,000 rpm for 3 min.**

Visual inspection

1. Inspect the following items:
   - If any of the following malfunctions are indicated, replace the spark plug.
     — Insulator breakage
     — Worn electrode
     — Damaged gasket
     — Badly burned insulator (sparking side)

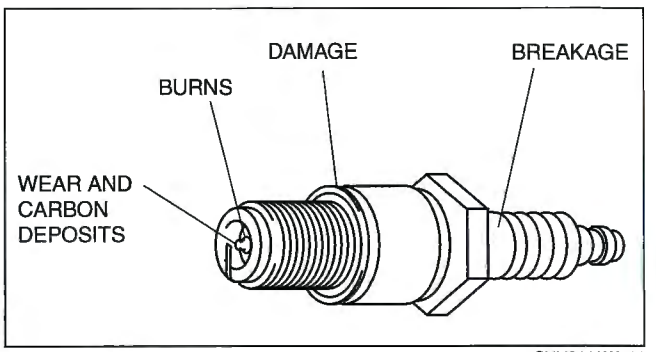

CHU0118W012

Resistance Inspection

1. Measure the resistance of the spark plug using a tester as shown in the figure.
   - If not within the specification, replace the spark plug.

Resistance
L3: 3.0—7.5 kilohms [25°C {77 °F}]
AJ: 8.0—20 kilohms [25°C {77 °F}]

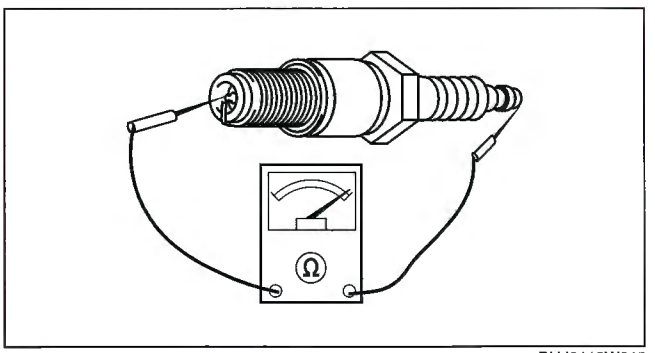

BHJ0118W015

01–18B IGNITION SYSTEM [L3 WITH TC]

IGNITION SYSTEM LOCATION INDEX [L3 WITH TC] 01–18B–1
IGNITION COIL REMOVAL/INSTALLATION [L3 WITH TC] 01–18B–2
IGNITION COIL INSPECTION [L3 WITH TC] 01–18B–2
Ignition Coil Inspection 01–18B–2
Ignition Coil With Built-In Igniter Inspection 01–18B–2
SPARK PLUG REMOVAL/INSTALLATION [L3 WITH TC] 01–18B–3
SPARK PLUG INSPECTION [L3 WITH TC] 01–18B–3
Specification 01–18B–3
Plug Gap Inspection 01–18B–3
Cleaning 01–18B–4
Visual inspection 01–18B–4
Resistance Inspection 01–18B–4

IGNITION SYSTEM LOCATION INDEX [L3 WITH TC]

E6U011800000W01

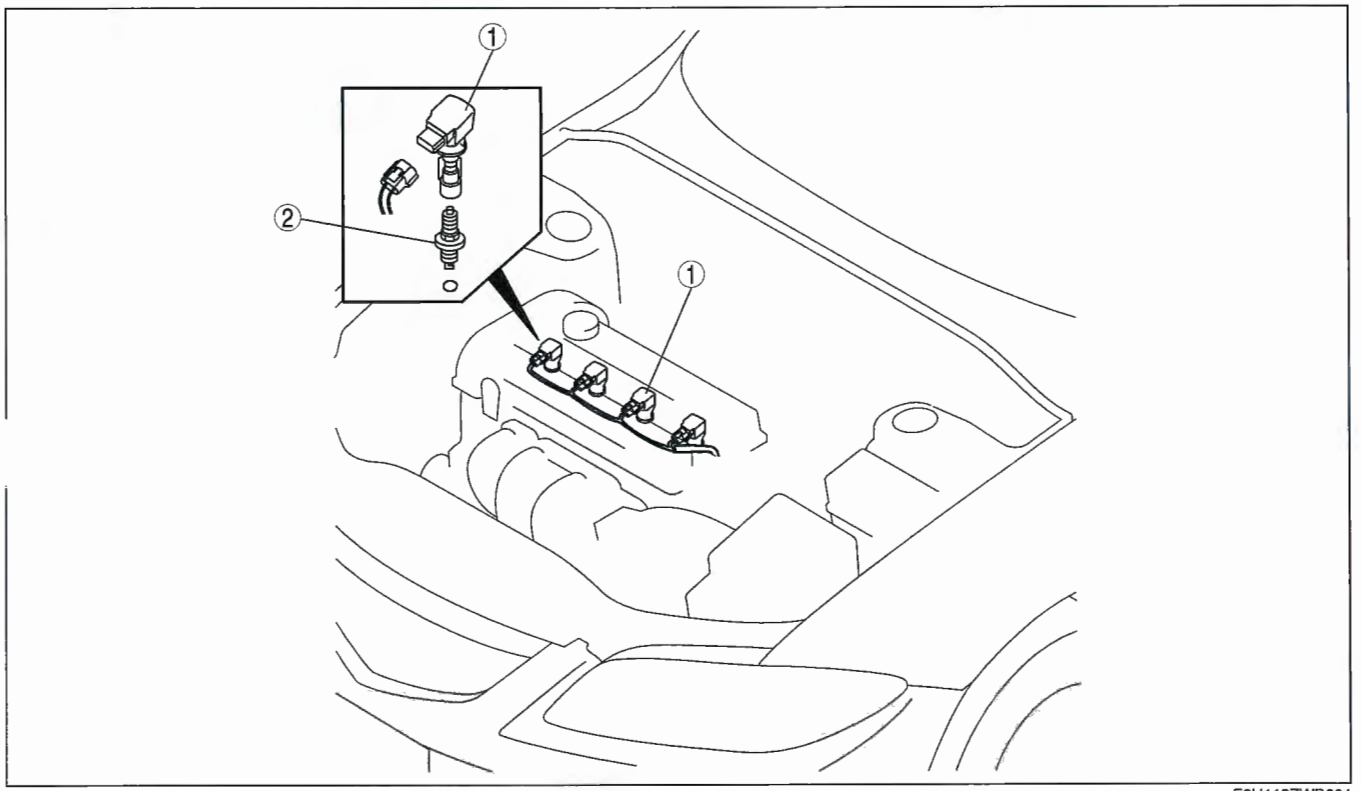

E6U118ZWB001

1	Ignition coil (See 01–18B–2 IGNITION COIL REMOVAL/INSTALLATION [L3 WITH TC].) (See 01–18B–2 IGNITION COIL INSPECTION [L3 WITH TC].)

2	Spark plug (See 01–18B–3 SPARK PLUG REMOVAL/INSTALLATION [L3 WITH TC].) (See 01–18B–3 SPARK PLUG INSPECTION [L3 WITH TC].)

IGNITION COIL REMOVAL/INSTALLATION [L3 WITH TC]

E6U011818100W03

1. Disconnect the negative battery cable.
2. Remove the charge air cooler. (See 01–13B–4 INTAKE AIR SYSTEM REMOVAL/INSTALLATION [L3 WITH TC].)
3. Remove in the order indicated in the table.

1	Connector
2	Ignition coil

4. Install in the reverse order of removal.

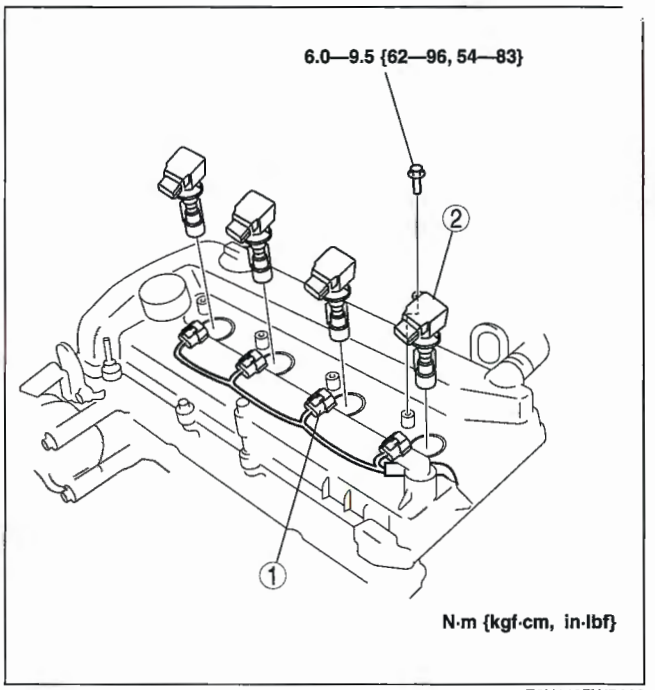

E6U118ZWB002

IGNITION COIL INSPECTION [L3 WITH TC]

E6U011818100W04

Ignition Coil Inspection

1. Perform the spark test and identify the malfunctioning cylinder.
2. Replace the ignition coil of the malfunctioning cylinder with that of a normal cylinder, and reperform the spark test.
   - If the spark is not normal due to a malfunctioning ignition coil, replace that ignition coil.
   - It is unlikely that all four ignition coils fail to operate properly. To prevent replacing a normal component, perform the above procedure, identify the malfunctioning ignition coil, and replace it.

Ignition Coil With Built-In Igniter Inspection

1. Disconnect the ignition coil connector.

2. Measure the resistance between each terminal on the ignition coil connector using an analog circuit tester.
   - If the measurement corresponds to the table, replace the ignition coil.

Item	Tester Connection Position		Condition
	Positive	Negative	
Terminal	C	A	0 ohm is not normal (∞ ohm is normal)
	A	C	
	C	B	
	B	C	
	A	B	∞ or 0 ohm is not normal (several kilohm is normal)
	B	A	

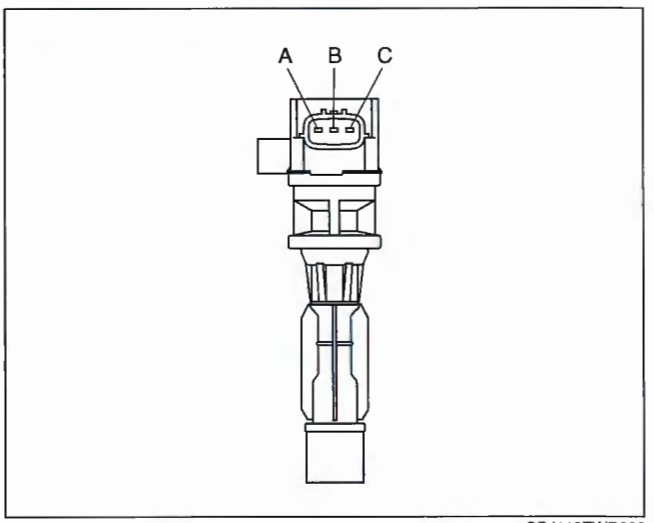

CPJ118ZWB003

ARK PLUG REMOVAL/INSTALLATION [L3 WITH TC]

E6U011818110W03

Caution
- **If a spark plug that is not as specified is installed, engine performance will be deteriorated. Install only the specified spark plug when replacing.**

1. Disconnect the negative battery cable.
2. Remove the charge air cooler. (See 01–13B–4 INTAKE AIR SYSTEM REMOVAL/INSTALLATION [L3 WITH TC].)
3. Remove the ignition coils. (See 01–18B–2 IGNITION COIL REMOVAL/INSTALLATION [L3 WITH TC].)
4. Remove the spark plug using a plug-wrench.
5. Install in the reverse order of removal.

Tightening torque
10—14 N·m {1.1—1.4 kgf·m, 8.0—10.3 ft·lbf}

SPARK PLUG INSPECTION [L3 WITH TC]

E6U011818110W04

Specification

Spark plug type
L3K9 18 110A, L3Y3 18 110

Plug Gap Inspection

Caution
- **To avoid possible damage to the tip, do not adjust the plug gap.**
- **To prevent damaging the tip, use a wire type plug gap gauge when inspecting the plug gap.**

1. Measure the spark plug gap using a wire type plug gap gauge.
   - If not within the specification, replace the spark plug.

Spark plug gap
0.7—0.8 mm {0.028—0.031 in}

Cleaning

Caution
- **Carbon may adhere to the tip of the spark plug during vehicle delivery or repeated short distance driving during the winter time. If there is any malfunction such as rough idling or start difficulty due to carbon adhesion causing plug fouling, burn off the carbon by performing no-load racing of the engine.**
- **When performing the no-load racing, apply the side brake and foot brake, move the shift lever to neutral to prevent an accident and serious injury.**
- **To avoid possible damage to the spark plug tip, do not use a wire brush for cleaning.**

Note
- To avoid possible damage to the tip, use gasoline to clean the spark plugs after removing dirt.

1. If there is carbon adhering to the spark plug, perform no-load racing at **3,000 rpm for 3 min.**

Visual inspection
1. Inspect the following items:
   - If any of the following malfunctions are indicated, replace the spark plug.
     — Insulator breakage
     — Worn electrode
     — Damaged gasket
     — Badly burned insulator (sparking side)

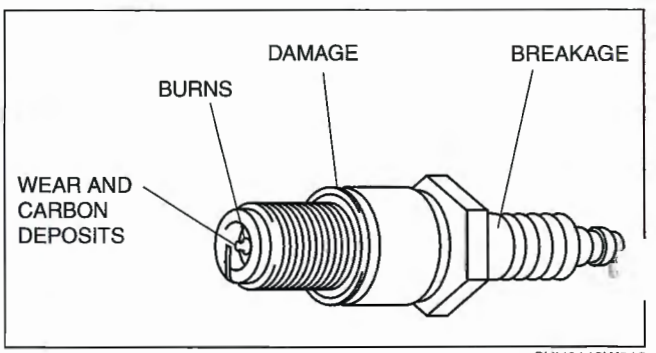

CHU0118W012

Resistance Inspection
1. Measure the resistance of the spark plug using a tester as shown in the figure.
   - If not within the specification, replace the spark plug.

Spark plug resistance [25°C {77 °F}]
3.0—7.5 kilohms

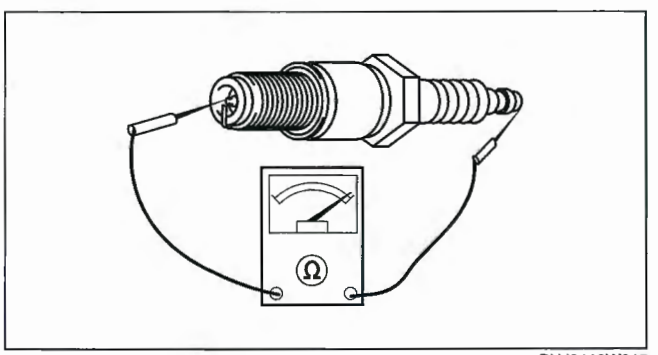

BHJ0118W015

01–19A STARTING SYSTEM [L3, AJ]

STARTER REMOVAL/INSTALLATION [L3, AJ] 01–19A–2
L3 ..... 01–19A–2
AJ 01–19A–3
STARTER INSPECTION [L3, AJ] 01–19A–4
On-vehicle Inspection 01–19A–4
No-load test 01–19A–4
Magnetic Switch Operation Inspection 01–19A–4
Pinion Gap Inspection 01–19A–5
Starter Inner Parts Inspection 01–19A–5
STARTER DISASSEMBLY/ASSEMBLY [L3, AJ] 01–19A–8
STARTER INTERLOCK SWITCH INSPECTION (MTX) 01–19A–9
On-vehicle Inspection 01–19A–9
Continuity Inspection 01–19A–9

STARTER REMOVAL/INSTALLATION [L3, AJ]

E6U011918400W01

Warning

- **When the battery cables are connected, touching the vehicle body with starter terminal B generates sparks. This can cause personal injury, fire, and damage to the electrical components Always disconnect the battery before performing the following operation.**

L3

1. Disconnect the negative battery cable.
2. Remove the air cleaner. (See 01–13A–4 INTAKE AIR SYSTEM REMOVAL/INSTALLATION [L3].)
3. Remove the under cover.
4. Remove the clutch release cylinder with the pipes still connected. (MTX) (See 05–10–14 CLUTCH RELEASE CYLINDER REMOVAL/INSTALLATION [G35M-R, A65M-R].)
5. Remove in the order indicated in the table.
6. Install in the reverse order of removal.

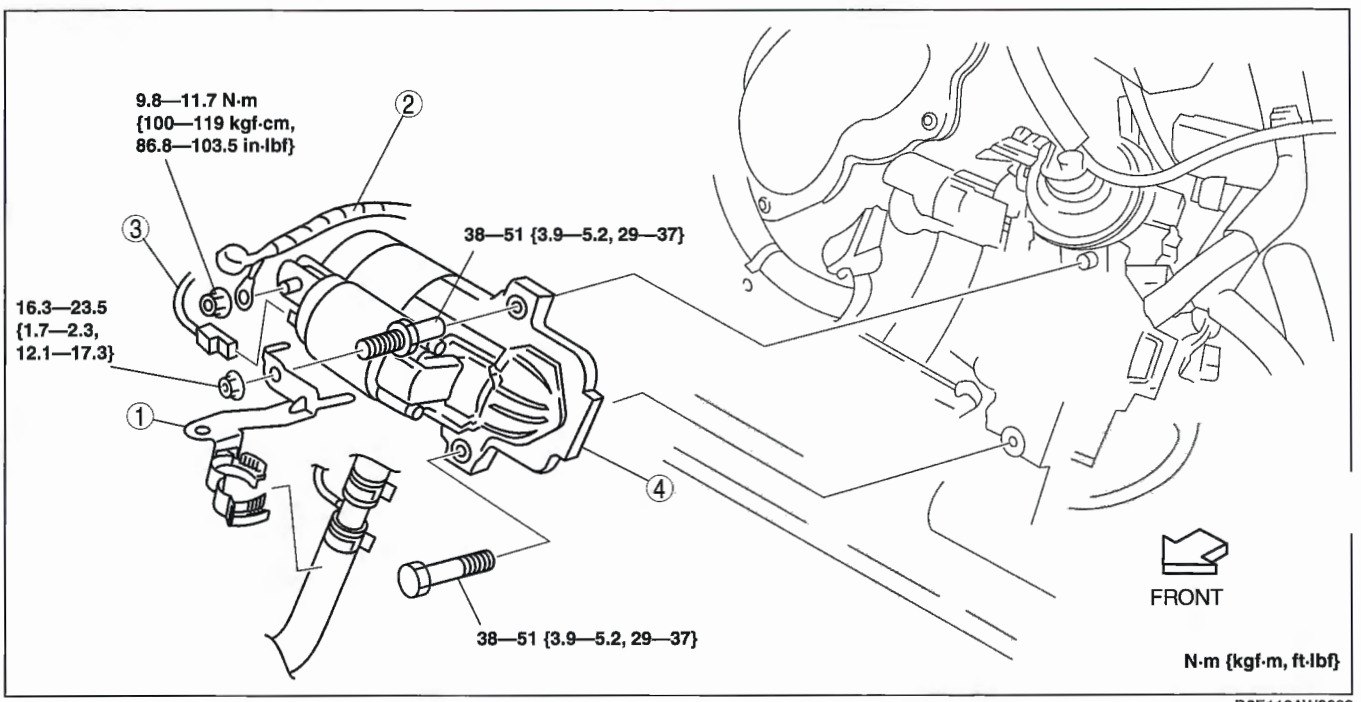

D6E119AW3002

1	Water hose bracket	3	Terminal S connector
2	Terminal B cable	4	Starter

AJ

1. Remove the battery and the battery tray. (See 01–17A–1 BATTERY REMOVAL/INSTALLATION [L3, AJ].)
2. Remove the air cleaner. (See 01–13C–2 INTAKE AIR SYSTEM REMOVAL/INSTALLATION [AJ].)
   Disconnect the selector cable and the selector cable bracket. (See 05–18–7 SELECTOR LEVER COMPONENT REMOVAL/INSTALLATION.) (ATX)
4. Position the harness bracket out of the way. (ATX)
5. Remove in the order indicated in the table.

MTX

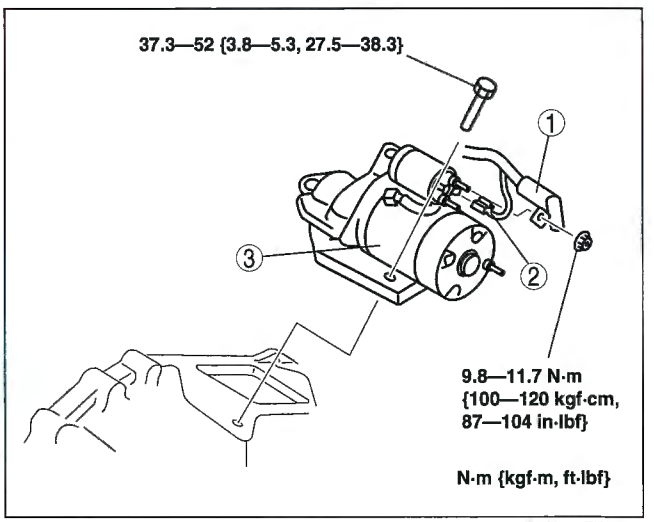

D6U119ZW7001

ATX

1	Terminal B wire
2	Terminal S wire
3	Starter

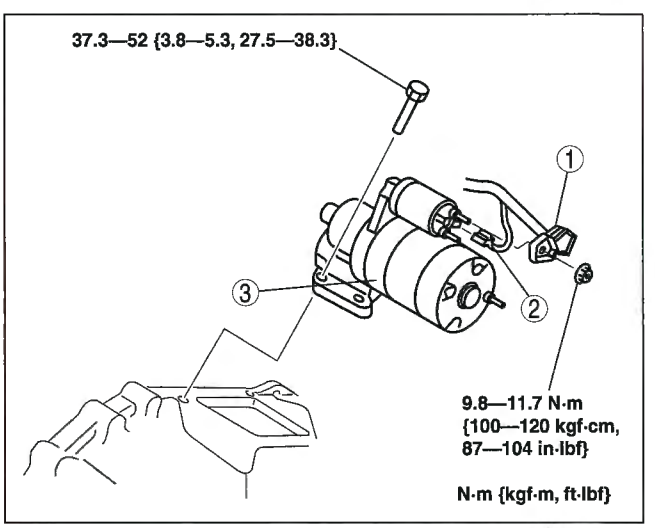

D6U119ZW7002

Install in the reverse order of removal.

STARTER INSPECTION [L3, AJ]

E6U011918400W02

On-vehicle Inspection

1. Verify that the battery is fully charged.
2. The starter is normal if it rotates smoothly and without any noise when the engine is cranked.
   - If the starter does not operate, inspect the following:
     — Remove the starter, and inspect the starter unit.
     — Inspect the related wiring harnesses, the ignition switch, and the transaxle range switch (ATX).

No-load test

1. Verify that the battery is fully charged.
2. Connect the starter, battery, and a tester as shown in the figure.
3. Operate the starter and verify that it rotates smoothly.
   - If the starter does not rotate smoothly, inspect the starter unit.
4. Measure the voltage and current while the starter is operating.
   - If not within the specification, replace the starter.

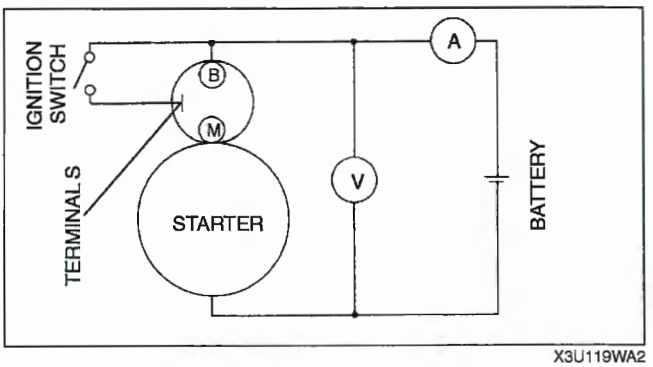

X3U119WA2

Specification

Voltage (V)	11
Current (A)	90 or less

Magnetic Switch Operation Inspection

Pull-out test

Note

- Depending on the battery charge condition, the starter motor pinion may rotate while in an extended state. This is due to current flowing to the starter motor through the pull-in coil to turn the starter motor, and does not indicate an abnormality.

1. Verify that the starter motor pinion is extended while battery positive voltage is connected to terminal S and the starter body is grounded.
   - If the starter motor pinion is not extended, repair or replace the starter.

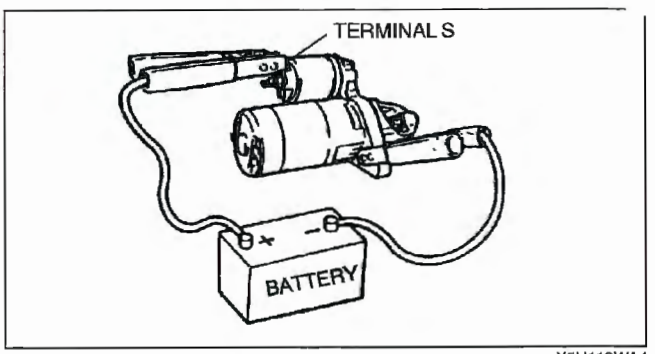

X5U119WA4

Return test

1. Disconnect the motor wire from terminal M.
2. Connect battery positive voltage to terminal M and ground the starter body.
3. Pull out the drive pinion with a screwdriver. Verify that it returns to its original position when released.
   - If it does not return, repair or replace the starter.

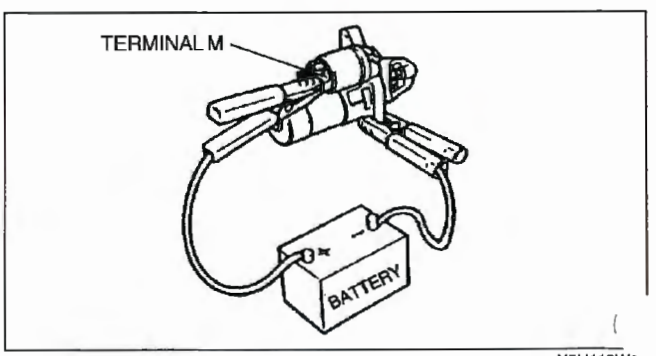

X5U119WA5

Pinion Gap Inspection

1. Pull out the drive pinion with the battery positive voltage connected to terminal S and the starter body grounded.

   Caution
   - **Applying power for more than 10 s can damage the starter. Do not apply power for more than 10 s.**

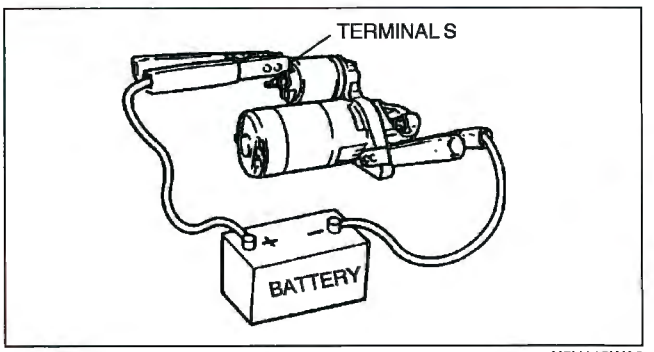

X5U119WA6

2. Measure the pinion gap while the drive pinion is extended.
   - If not as specified, adjust with an adjustment washer (between drive housing front cover and magnetic switch).

   Specification
   L3: 0.5—2.0 mm {0.02—0.08 in}
   AJ: 0 mm {0 in}

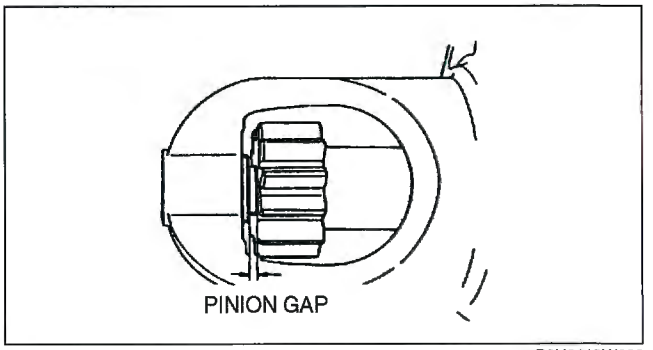

B6U0119W003

Starter Inner Parts Inspection
Armature

1. Verify that there is no continuity between the commutator and the core at each segment using a tester.
   - If there is continuity, replace the armature.

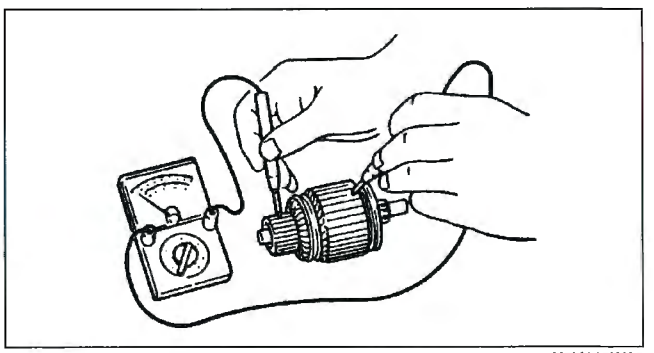
X5U119WA8

2. Verify that there is no continuity between the commutator and the shaft using a tester.
   - If there is continuity, replace the armature.

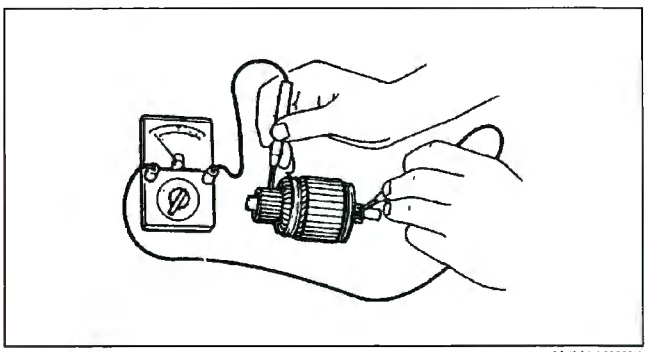
X5U119WA9

3. Place the armature on V-blocks, and measure the runout using a dial indicator.

Maximum runout
L3: 0.05 mm {0.002 in}
AJ MTX: 0.1 mm {0.004 in}
AJ ATX: 0.05 mm {0.002 in}

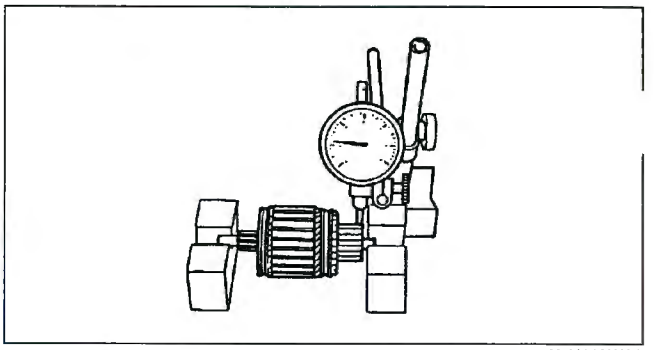
X5U119WAA

4. Measure the commutator diameter.
   - If not within the minimum specification, replace the armature.

Standard commutator diameter
29.4 mm {1.16 in}
Minimum commutator diameter
28.8 mm {1.13 in}

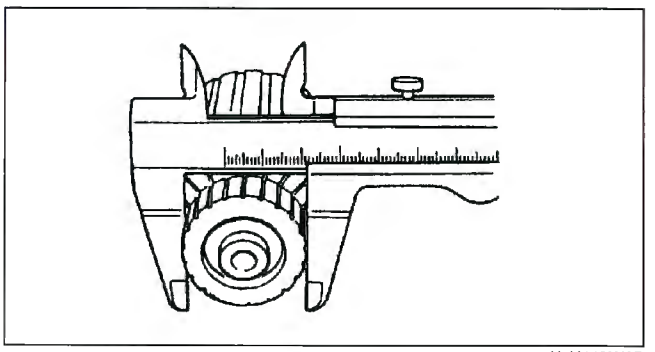
X5U119WAB

5. Measure the segment groove depth of the commutator.
   - If not within the minimum specification, undercut the grooves to the standard depth.

Standard depth
L3: 0.4—0.6 mm {0.016—0.023 in}
AJ MTX: 0.5 mm {0.02 in}
AJ ATX: 0.4—0.6 mm {0.016—0.023 in}
Minimum depth
0.2 mm {0.008 in}

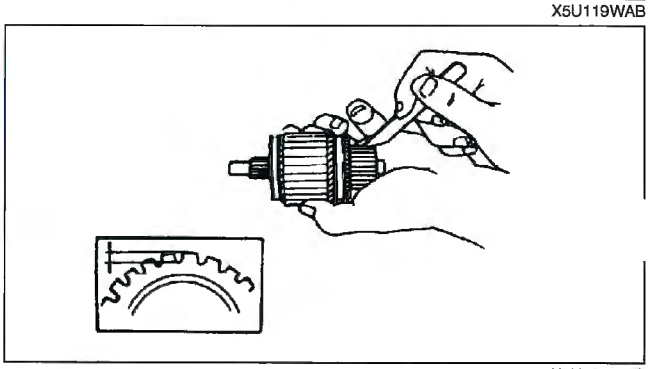
X5U119WAC

Magnetic switch

1. Inspect for continuity between terminals S and M using a tester.
   - If there is no continuity, replace the magnetic switch.

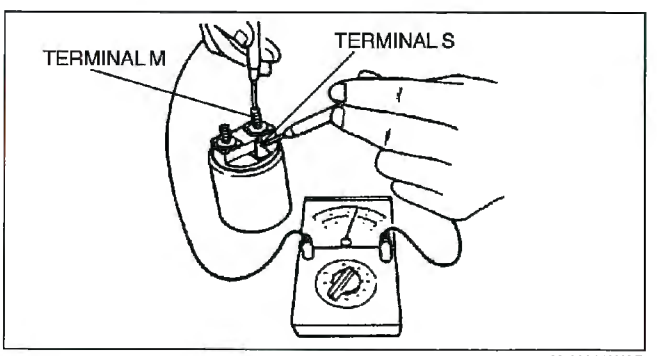

X5U119WAD

2. Inspect for continuity between terminal S and the body using a tester.
   - If there is no continuity, replace the magnetic switch.

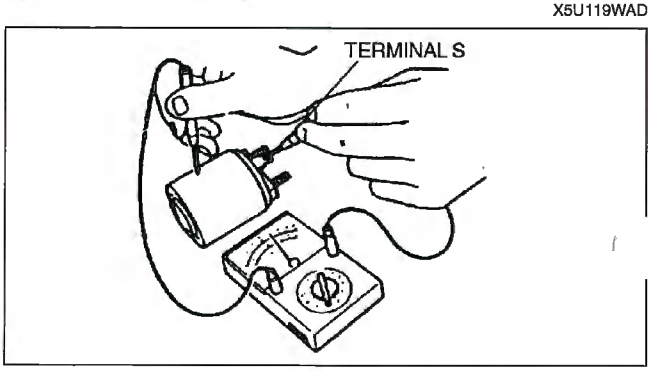

X5U119WAE

3. Verify that there is no continuity between terminals M and B using a tester.
   - If there is continuity, replace the magnetic switch.

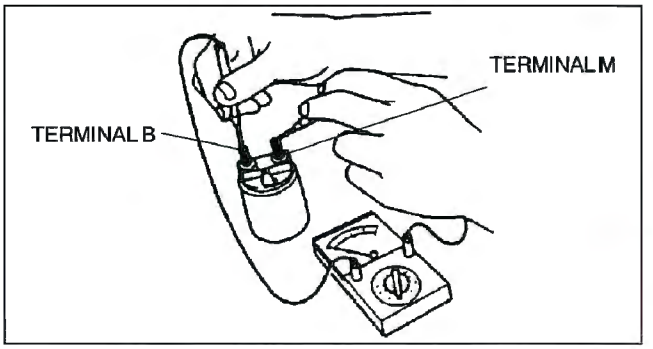

YMU119WA3

Brush and brush holder

1. Verify that there is no continuity between each insulated brush and plate using a tester.
   - If there is continuity, replace the brush holder.

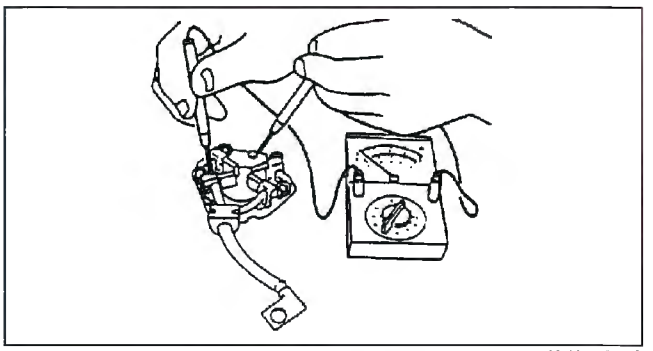
X5U119WAG

2. Measure the brush length.
   - If any brush is worn almost to or beyond the minimum specification, replace all of the brushes.

Standard brush length
12.3 mm {0.48 in}
Minimum brush length
7.0 mm {0.28 in}

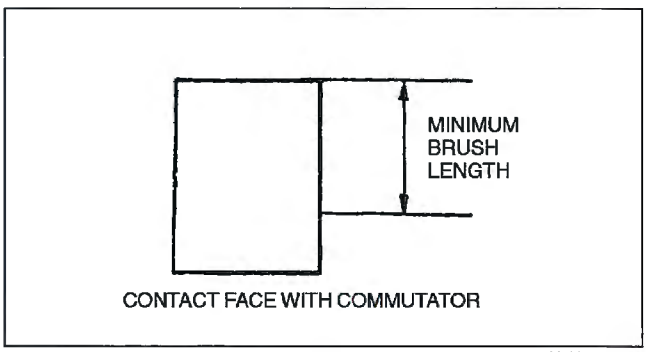

X5U119WAH

3. Measure the brush spring force using a spring balance.
   - If not within the minimum specification, replace the brush and brush holder component.

Standard spring force
L3: 21.6 N {2.20 kgf, 4.84 lbf}
AJ MTX: 18.3—24.8 N {1.87—2.52 kgf, 4.42—5.57 lbf}
AJ ATX: 21.6 N {2.20 kgf, 4.84 lbf}
Minimum spring force
5.9 N {0.6 kgf, 1.3 lbf}

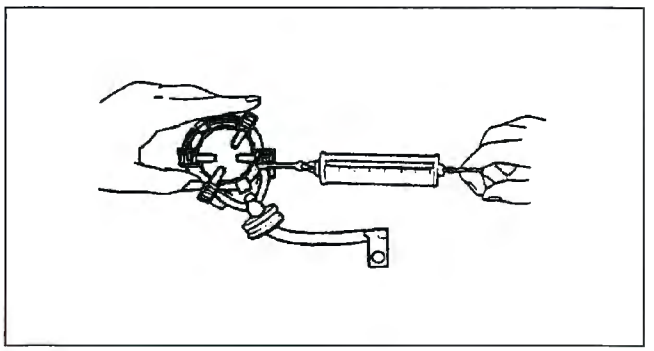
X5U119WAJ

STARTER DISASSEMBLY/ASSEMBLY [L3, AJ]

E6U011918400W03

1. Disassemble in the order indicated in the table.
2. Assemble in the reverse order of disassembly.

L3

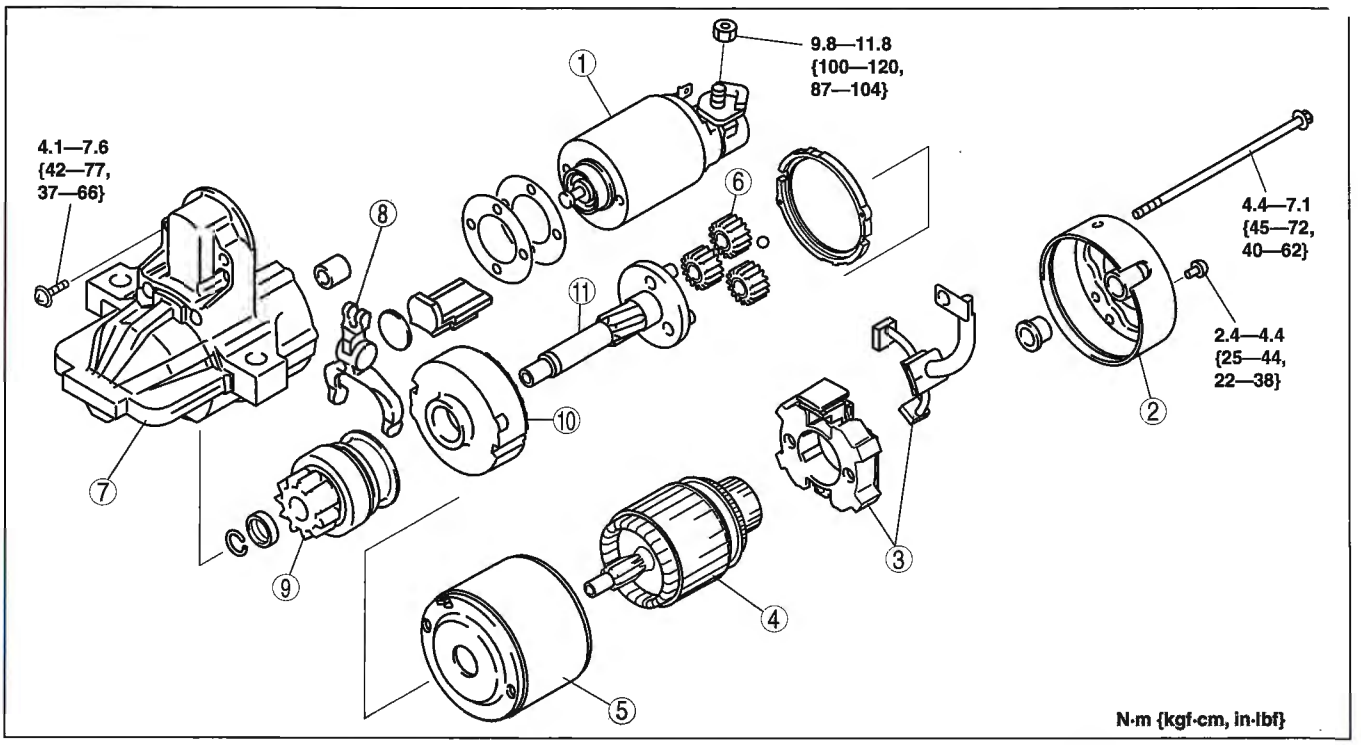

E6U119ZW5002

1	Magnetic switch
2	Rear housing
3	Brush and brush holder
4	Armature
5	Yoke
6	Planetary gear

7	Front cover
8	Lever
9	Drive pinion
10	Internal gear
11	Gear shaft

AJ

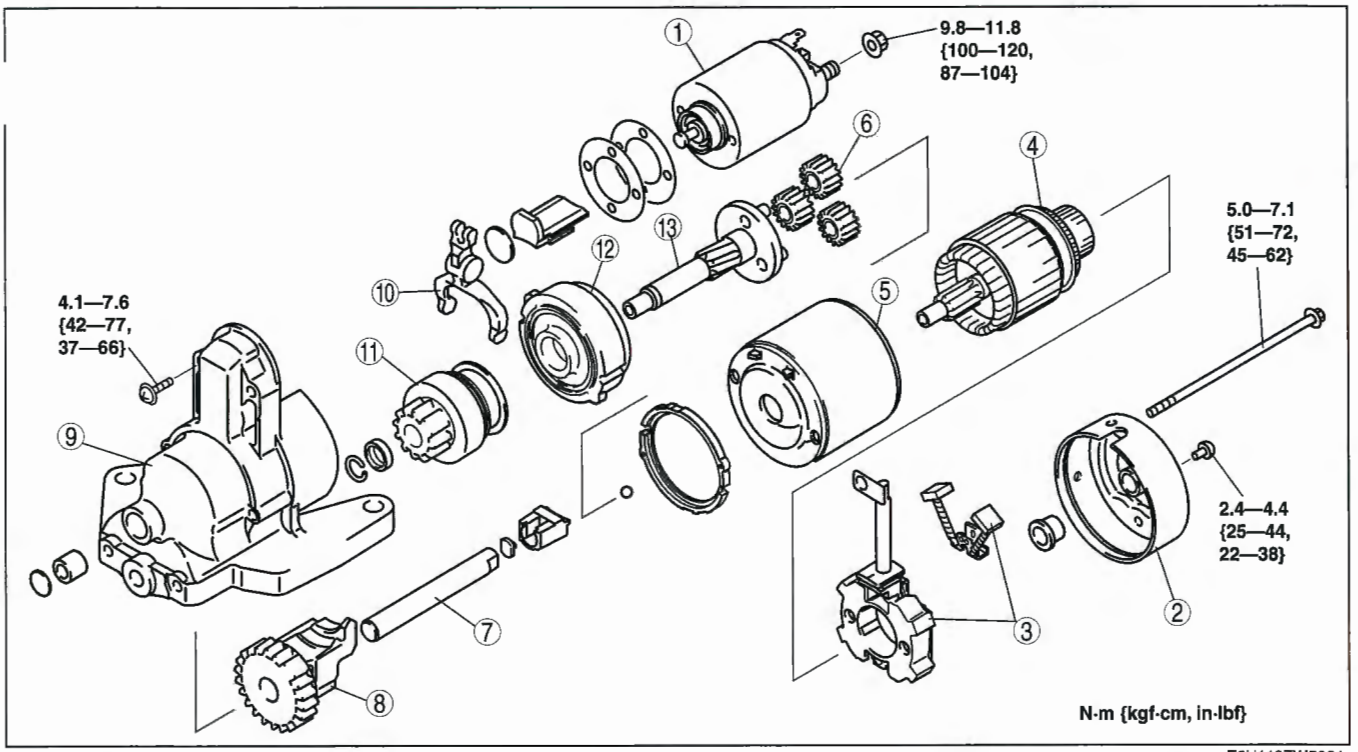

E6U119ZW5001

1	Magnetic switch
2	Rear housing
3	Brush and brush holder
4	Armature
5	Yoke
6	Planetary gear
7	Pinion shaft

8	Pinion
9	Front cover
10	Lever
11	Drive pinion
12	Internal gear
13	Gear shaft

STARTER INTERLOCK SWITCH INSPECTION (MTX)

E6U011943440W01

On-vehicle Inspection

1. Inspect the following.
   - With the clutch pedal not depressed, verify that the engine does not start.
   - With the clutch pedal fully depressed, verify that the engine starts.
     — If not as specified, perform continuity inspection.

Continuity Inspection

1. Disconnect the starter interlock switch connector.
2. Verify that the continuity is as indicated in the table.
   - If there is any malfunction, replace the starter interlock switch.

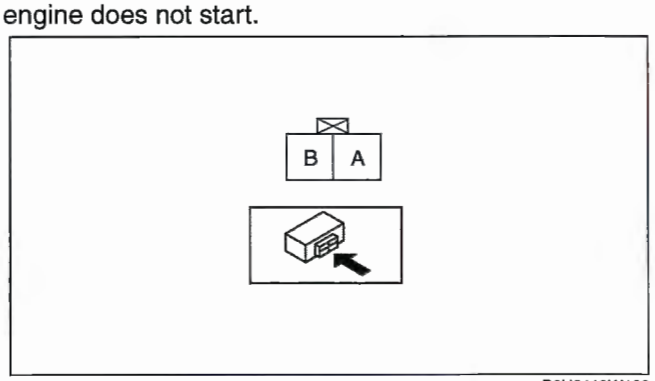

B6U0119W103

O—O : Continuity

Condition	Terminal	
	A	B
Clutch pedal not depressed		
Clutch pedal depressed	O	O

X3U119WA3

01–19B STARTING SYSTEM [L3 WITH TC]

STARTING SYSTEM LOCATION INDEX [L3 WITH TC] 01–19B–1
STARTER REMOVAL/INSTALLATION [L3 WITH TC] 01–19B–2
Heater Pipe Removal Note **01–19B–2**
STARTER INSPECTION [L3 WITH TC] 01–19B–3
On-vehicle Inspection..... **01–19B–3**
No-load test **01–19B–3**
Magnetic Switch
Operation Inspection..... **01–19B–3**
Pinion Gap Inspection..... **01–19B–4**
Starter Inner Parts Inspection..... **01–19B–4**
STARTER DISASSEMBLY/ASSEMBLY [L3 WITH TC] 01–19B–7
STARTER INTERLOCK SWITCH INSPECTION [L3 WITH TC]..... 01–19B–7
On-vehicle Inspection **01–19B–7**
Continuity Inspection..... **01–19B–7**

STARTING SYSTEM LOCATION INDEX [L3 WITH TC]

E6U011900000W01

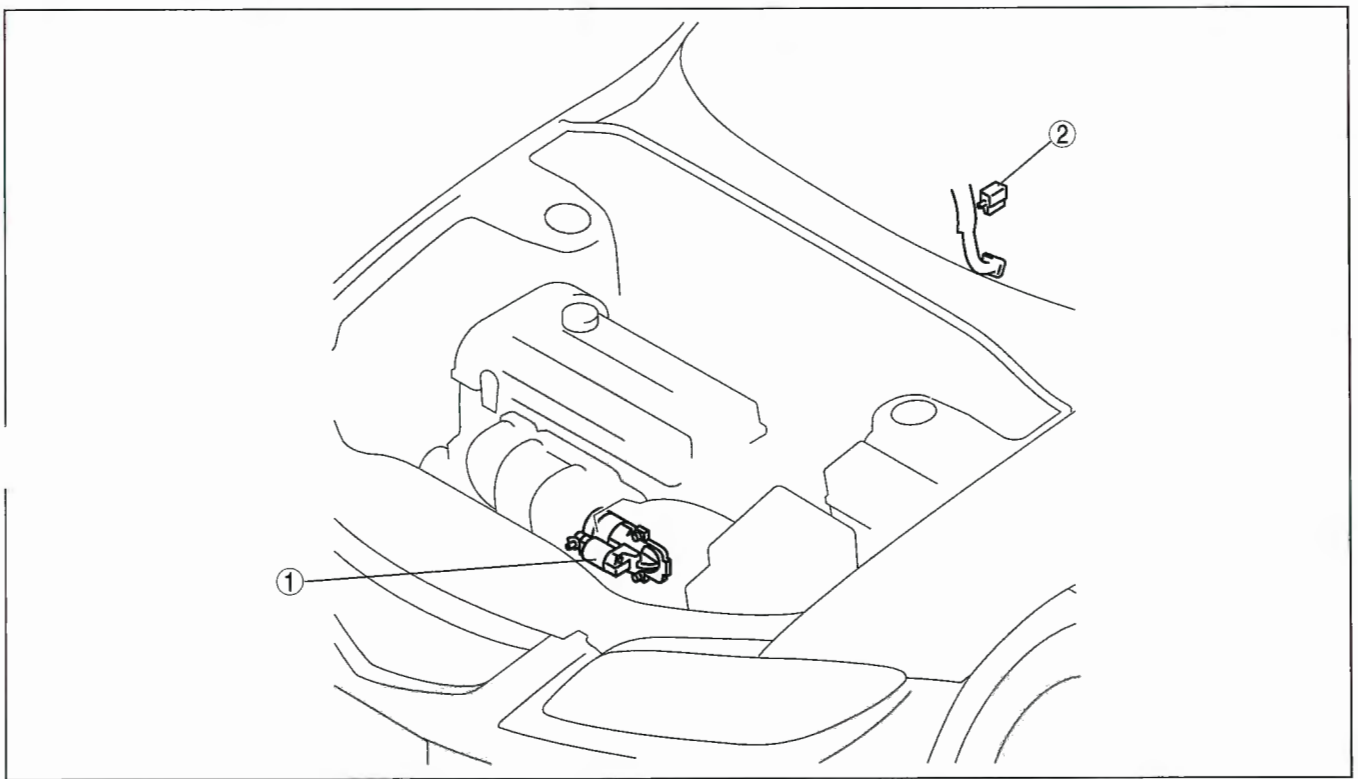

E6U119ZWB001

1	Starter (See 01–19B–2 STARTER REMOVAL/ INSTALLATION [L3 WITH TC].) (See 01–19B–3 STARTER INSPECTION [L3 WITH TC].) (See 01–19B–7 STARTER DISASSEMBLY/ ASSEMBLY [L3 WITH TC].)

2	Starter interlock switch (See 01–19B–7 STARTER INTERLOCK SWITCH INSPECTION [L3 WITH TC].)

STARTER REMOVAL/INSTALLATION [L3 WITH TC]

E6U011918400W04

Warning

- **When the battery cables are connected, touching the vehicle body with starter terminal B will generate sparks. This can cause personal injury, fire, and damage to the electrical components. Always disconnect the negative battery cable before performing the following operation.**

1. Disconnect the negative battery cable.
2. Remove the battery and battery tray. (See 01–17B–2 BATTERY REMOVAL/INSTALLATION [L3 WITH TC].)
3. Remove the air cleaner, charge air cooler cover, and air hose. (See 01–13B–4 INTAKE AIR SYSTEM REMOVAL/INSTALLATION [L3 WITH TC].)
4. Remove the under cover.
5. Remove the oil filter and oil cooler component with the water hoses still connected. Position the oil filter and oil cooler component so that it is out of the way.
6. Remove in the order indicated in the table.
7. Install in the reverse order of removal.
8. Inspect the engine oil level. (See 01–11B–2 ENGINE OIL LEVEL INSPECTION [L3 WITH TC].)

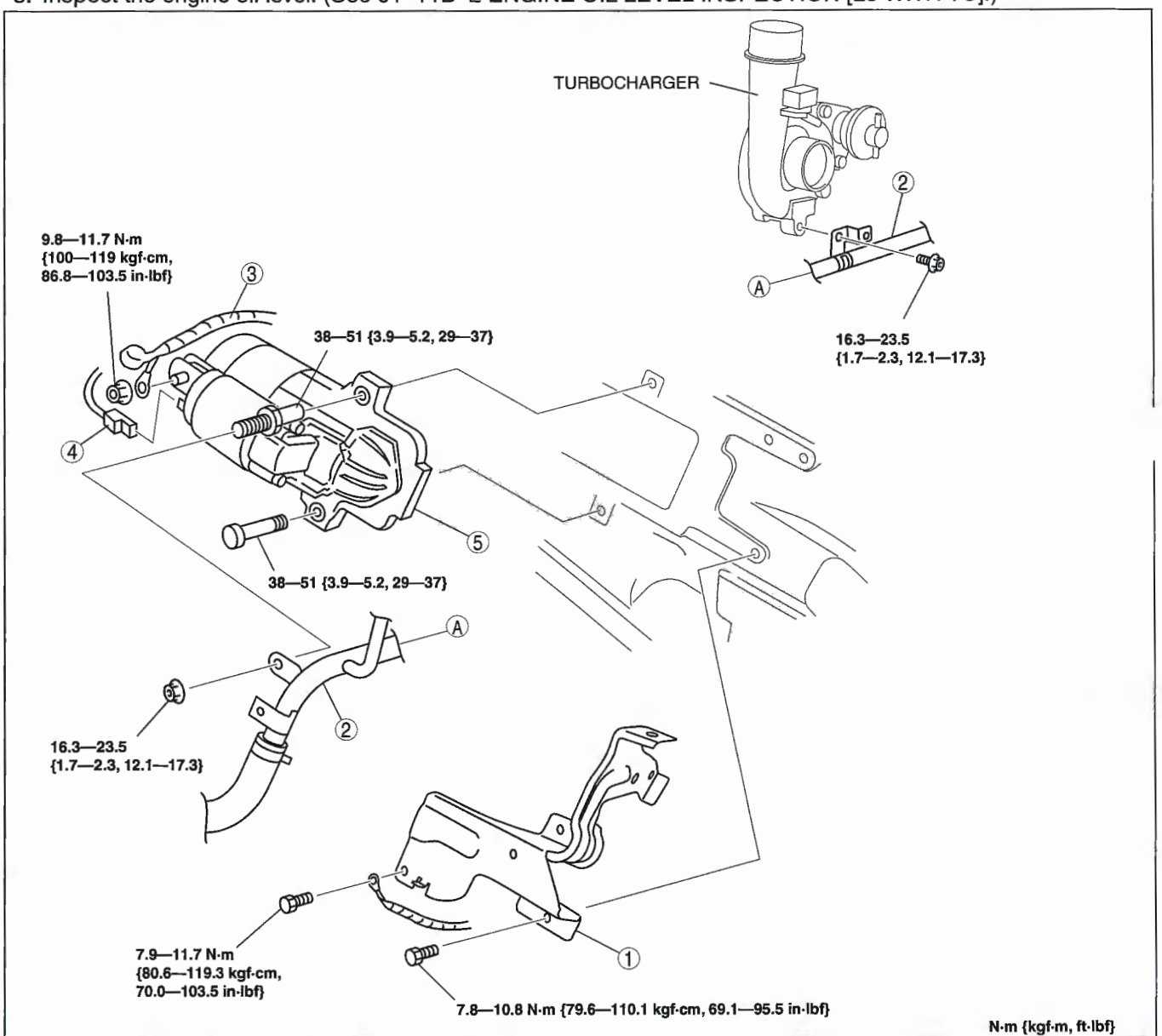

E6U119ZWB002

1	Harness bracket	3	Terminal B cable
2	Heater pipe (See 01–19B–2 Heater Pipe Removal Note.)	4	Terminal S connector
		5	Starter

Heater Pipe Removal Note

1. Remove the heater pipe with the water hoses still connected. Position the heater pipe so that it is out of the way.

STARTER INSPECTION [L3 WITH TC]

E6U011918400W05

On-vehicle Inspection

1. Verify that the battery is fully charged.
   The starter is normal if it rotates smoothly and without any noise when the engine is cranked.
   - If the starter does not operate, inspect the following:
     — Remove the starter, and inspect the starter unit.
     — Inspect the related wiring harnesses and the ignition switch.

No-load test

1. Verify that the battery is fully charged.
2. Connect the starter, battery, and a tester as shown in the figure.
3. Operate the starter and verify that it rotates smoothly.
   - If the starter does not rotate smoothly, inspect the starter unit.
4. Measure the voltage and current while the starter is operating.
   - If not within the specification, replace the starter.

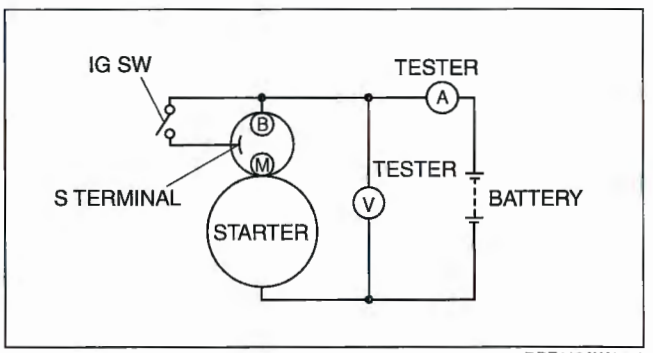

DPE119AW1003

Starter no load test voltage
11 V

Starter no load test current
90 A or less

Magnetic Switch Operation Inspection
Pull-out test

Note
- Depending on the battery charge condition, the starter motor pinion may rotate while in an extended state. This is due to current flowing to the starter motor through the pull-in coil to turn the starter motor, and does not indicate an abnormality.

1. Verify that the starter motor pinion is extended while battery positive voltage is connected to terminal S and the starter body is grounded.
   - If the starter motor pinion is not extended, repair or replace the starter.

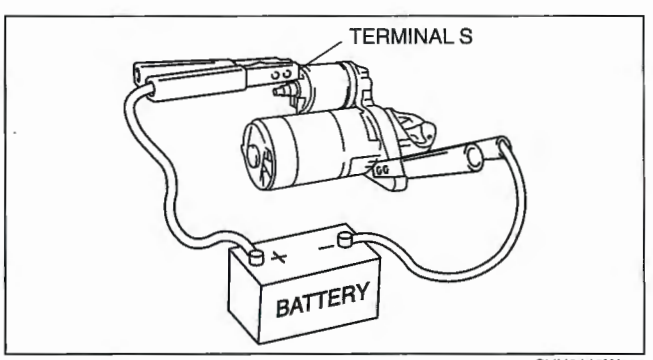

CHU0119W023

Return test

1. Disconnect the motor wire from terminal M.
2. Connect battery positive voltage to terminal M and ground the starter body.
3. Pull out the drive pinion with a screwdriver. Verify that it returns to its original position when released.
   - If it does not return, repair or replace the starter.

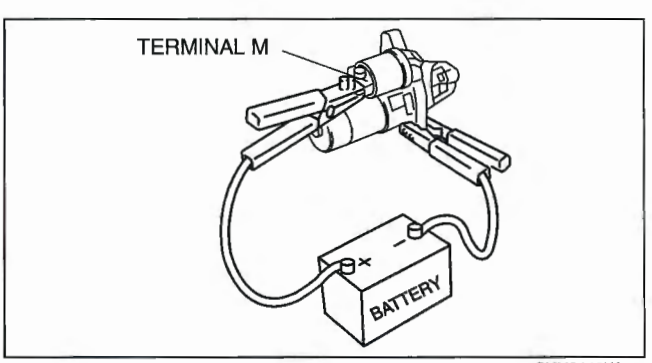

CHU0119W022

Pinion Gap Inspection

1. Pull out the drive pinion with the battery positive voltage connected to terminal S and the starter body grounded.

   Caution
   - **Applying power for more than 10 s can damage the starter. Do not apply power for more than 10 s.**

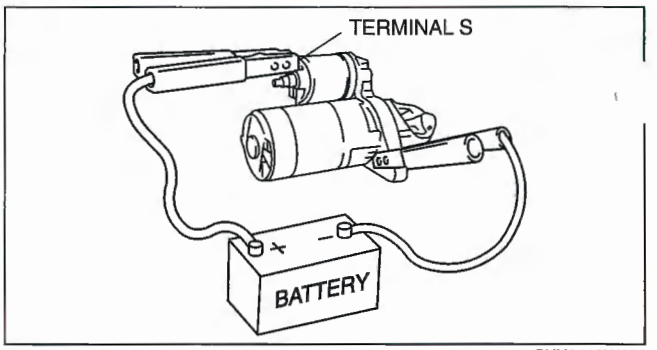

CHU0119W023

2. Measure the pinion gap while the drive pinion is extended.
   - If not as specified, adjust with an adjustment washer (between drive housing front cover and magnetic switch).

   Starter pinion gap
   0.5—2.0 mm {0.02—0.07 in}

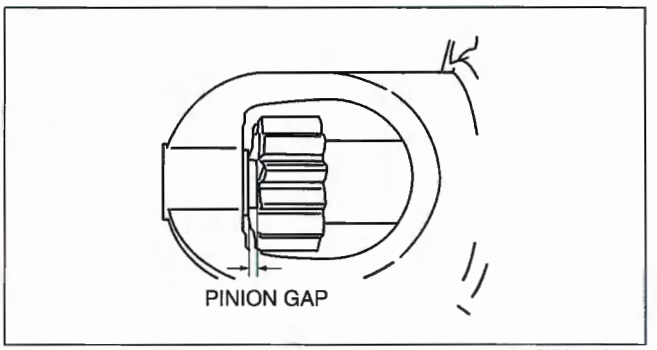

CHU0119W015

Starter Inner Parts Inspection
Armature

1. Verify that there is no continuity between the commutator and the core at each segment using a tester.
   - If there is continuity, replace the armature.

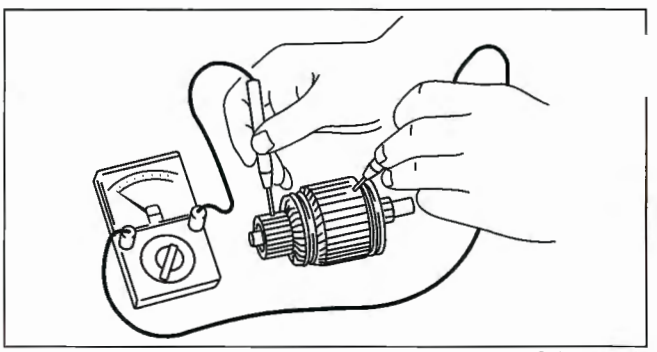
CHU0119W016

2. Verify that there is no continuity between the commutator and the shaft using a tester.
   - If there is continuity, replace the armature.

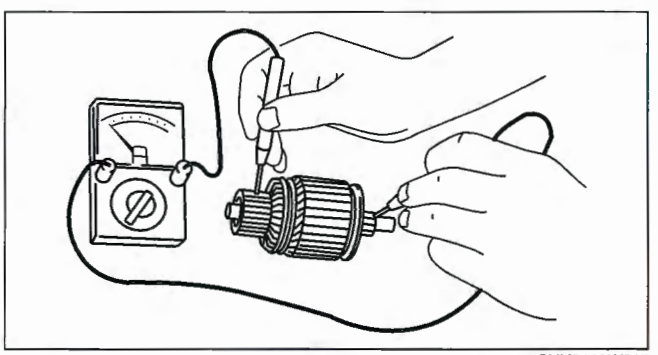
CHU0119W017

3. Place the armature on V-blocks, and measure the runout using a dial indicator.

Starter armature runout
0.05 mm {0.002 in} max.

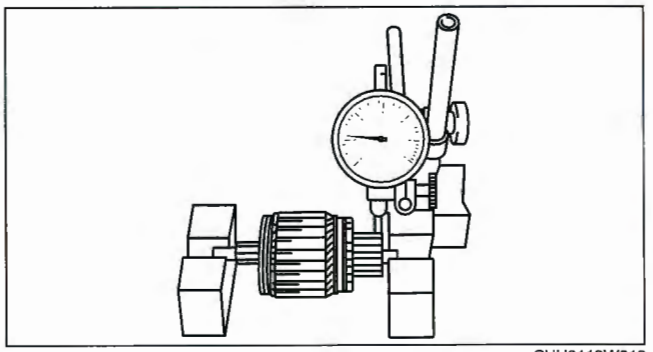

CHU0119W018

4. Measure the commutator diameter.
   - If not within the minimum specification, replace the armature.

Starter commutator diameter
Standard: 29.4 mm {1.16 in}
Minimum: 28.8 mm {1.13 in}

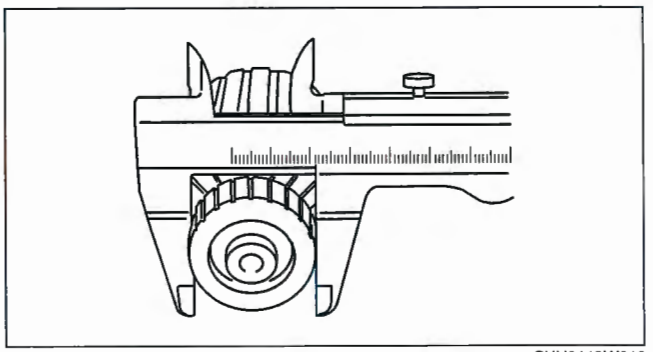

CHU0119W019

5. Measure the segment groove depth of the commutator.
   - If not within the minimum specification, undercut the grooves to the standard depth.

Segment groove depth of starter commutator
Standard: 0.4—0.6 mm {0.016—0.023 in}
Minimum: 0.2 mm {0.008 in}

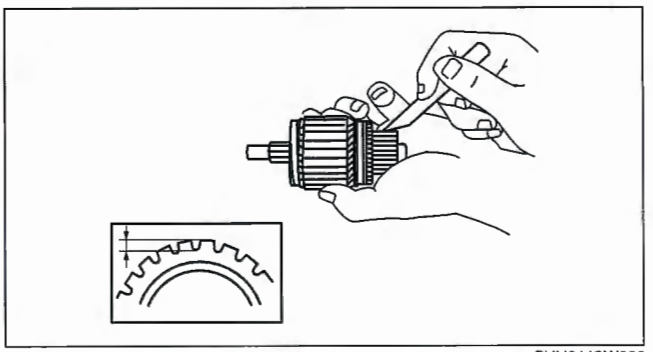

CHU0119W020

Magnetic switch

1. Inspect for continuity between terminals S and M using a tester.
   - If there is no continuity, replace the magnetic switch.

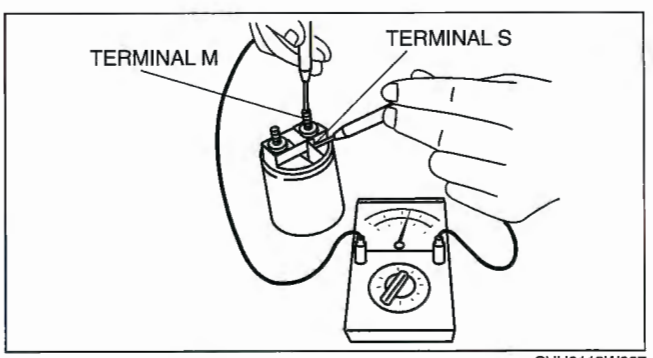

CHU0119W007

2. Inspect for continuity between terminal S and the body using a tester.
   - If there is no continuity, replace the magnetic switch.

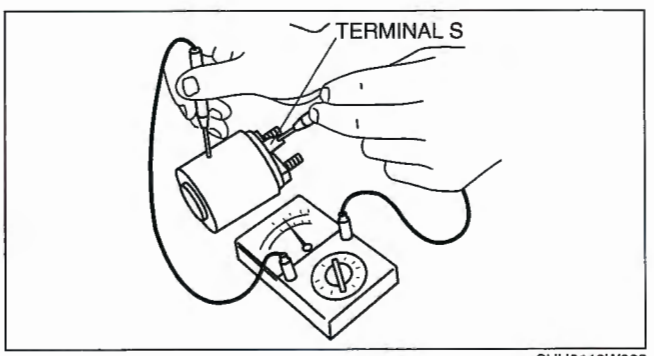

CHU0119W008

3. Verify that there is no continuity between terminals M and B using a tester.
   - If there is continuity, replace the magnetic switch.

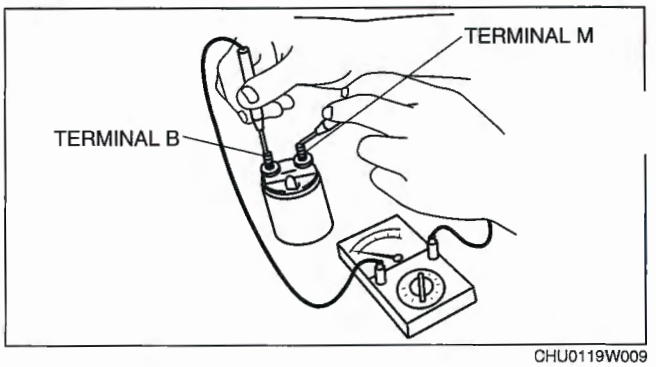

CHU0119W009

Brush and brush holder

1. Verify that there is no continuity between each insulated brush and plate using a tester.
   - If there is continuity, replace the brush holder.

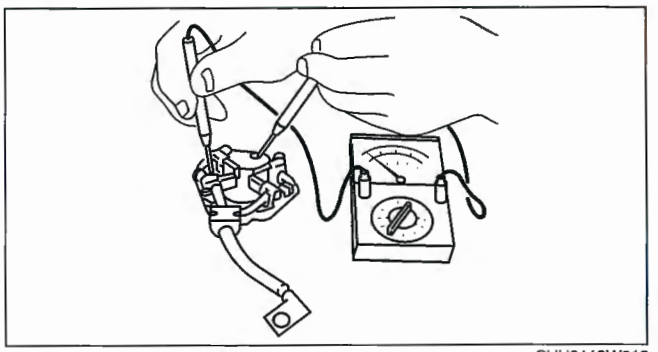
CHU0119W012

2. Measure the brush length.
   - If any brush is worn almost to or beyond the minimum specification, replace all of the brushes.

   Starter brush length
   Standard: 12.3 mm {0.48 in}
   Minimum: 7.0 mm {0.28 in}

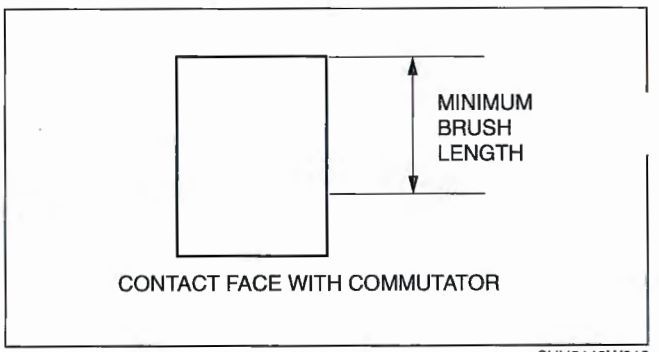

CHU0119W013

3. Measure the brush spring force using a spring balance.
   - If not within the minimum specification, replace the brush and brush holder component.

   Starter brush spring force
   Standard: 18.3—24.9 N {1.87—2.53 kgf, 4.12—5.59 lbf}
   Minimum: 5.9 N {0.6 kgf, 1.3 lbf}

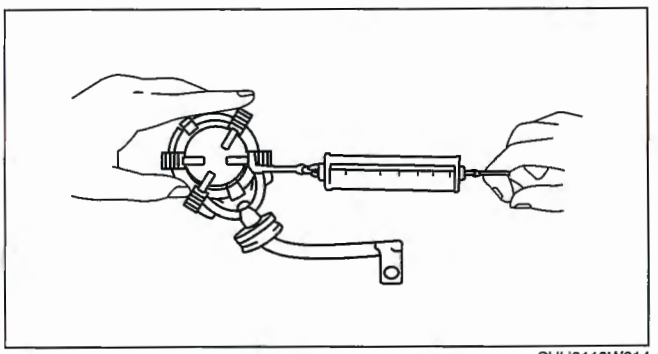
CHU0119W014

STARTER DISASSEMBLY/ASSEMBLY [L3 WITH TC]

E6U011918400W06

1. Disassemble in the order indicated in the table.
2. Assemble in the reverse order of disassembly.

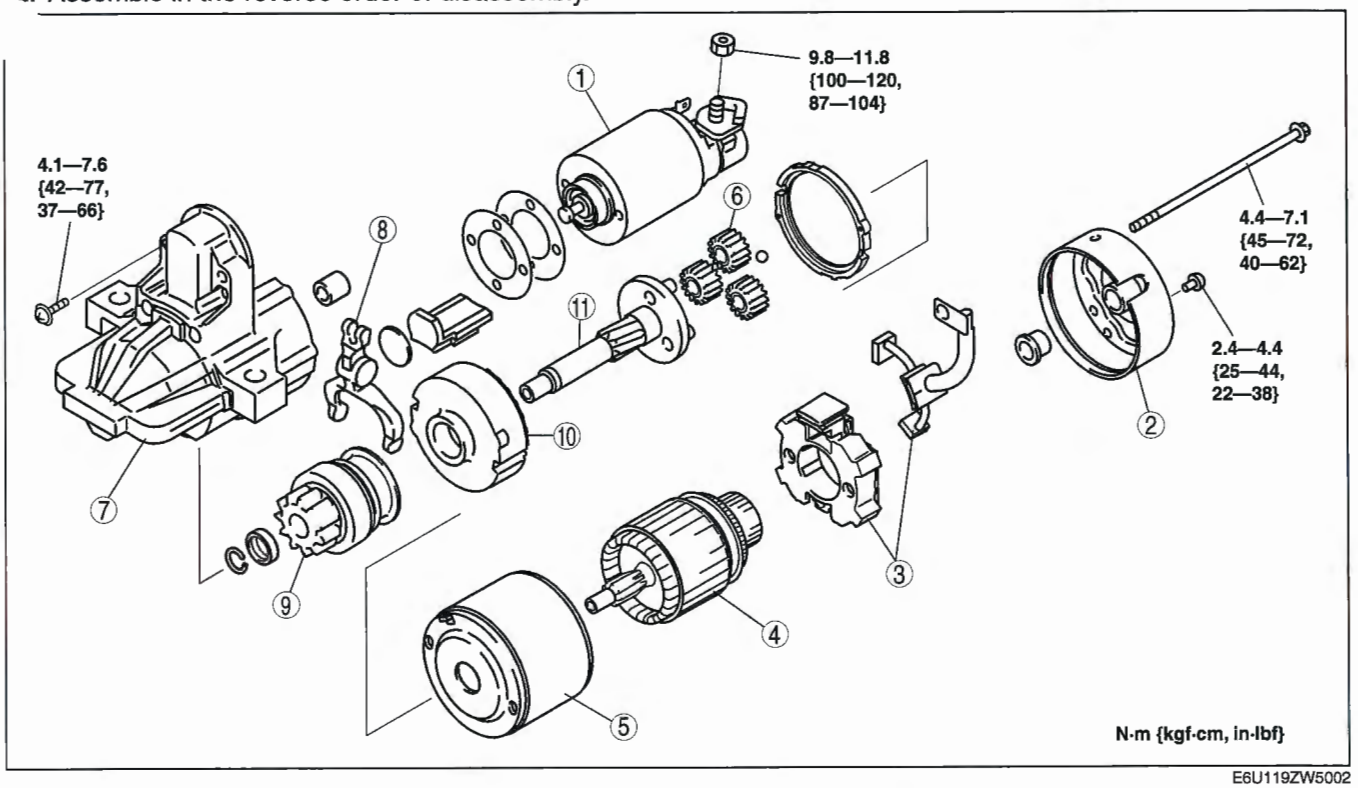

E6U119ZW5002

1	Magnetic switch
2	Rear housing
3	Brush and brush holder
4	Armature
5	Yoke
6	Planetary gear

7	Front cover
8	Lever
9	Drive pinion
10	Internal gear
11	Gear shaft

STARTER INTERLOCK SWITCH INSPECTION [L3 WITH TC]

E6U011943440W02

On-vehicle Inspection

1. Inspect the following.
   - With the clutch pedal not depressed, verify that the engine does not start.
   - With the clutch pedal fully depressed, verify that the engine starts.
     — If not as specified, perform the continuity inspection.

Continuity Inspection

1. Disconnect the starter interlock switch connector.
2. Verify that the continuity is as indicated in the table.
   - If there is any malfunction, replace the starter interlock switch.

O—O : Continuity

Condition	Terminal	
	A	B
Clutch pedal not depressed		
Clutch pedal depressed	O	O

X3U119WA3

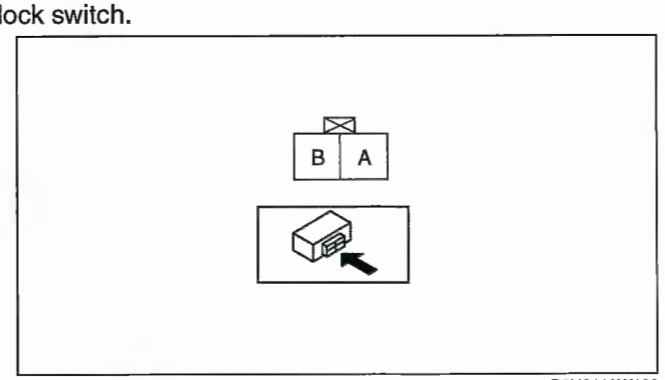

B6U0119W103

01–20A CRUISE CONTROL SYSTEM [L3, AJ]

CRUISE CONTROL SWITCH
INSPECTION[L3, AJ] 01–20A–1

CRUISE CONTROL SWITCH INSPECTION [L3, AJ]

E6U012066341W02

1. Disconnect the negative battery cable.
2. Remove the driver-side air bag module. (See 08–10–6 DRIVER-SIDE AIR BAG MODULE REMOVAL/ INSTALLATION.)
3. Disconnect the cruise control switch connector.
4. Inspect for resistance and continuity between the cruise control switch terminals using an ohmmeter.
   - If not as specified, replace the cruise control switch.

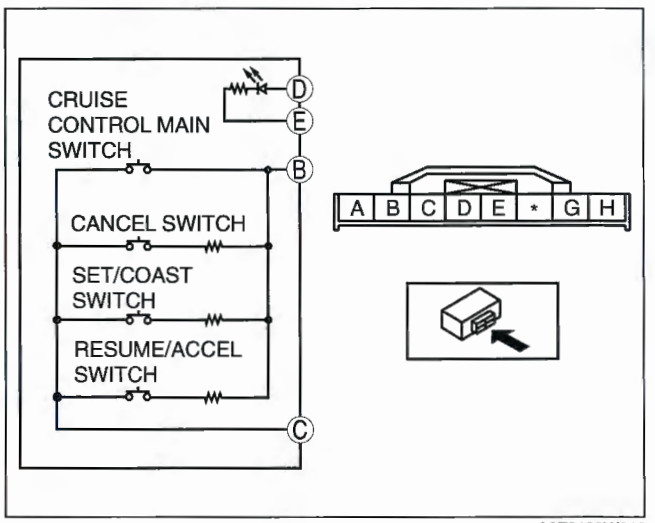

A6E8128W012

O—O: Continuity O—W—O: Resistance O—▶|—O: Diode

Switch position	Terminal			
	B	C	D	E
Cruise control main switch held at on	O—O		O—▶|—O	
CANCEL switch held at on	O—W—O R_1		O—▶|—O	
SET/COAST switch held at on	O—W—O R_2		O—▶|—O	
RESUME/ACCEL switch held at on	O—W—O R_3		O—▶|—O	
Neutral			O—▶|—O	

R_1: 118—122 ohms R_2: 667—693 ohms
R_3: 2,156—2,244 ohms

E6U120ZW1001

01–20B CRUISE CONTROL SYSTEM [L3 WITH TC]

CRUISE CONTROL SWITCH
INSPECTION [L3 WITH TC] 01–20B–1

CRUISE CONTROL SWITCH INSPECTION [L3 WITH TC]

E6U012066341W03

1. Disconnect the negative battery cable.
2. Remove the driver-side air bag module. (See 08–10–6 DRIVER-SIDE AIR BAG MODULE REMOVAL/ INSTALLATION.)
3. Disconnect the cruise control switch connector.
4. Inspect for resistance and continuity between the cruise control switch terminals using an ohmmeter.
   - If not as specified, replace the cruise control switch.

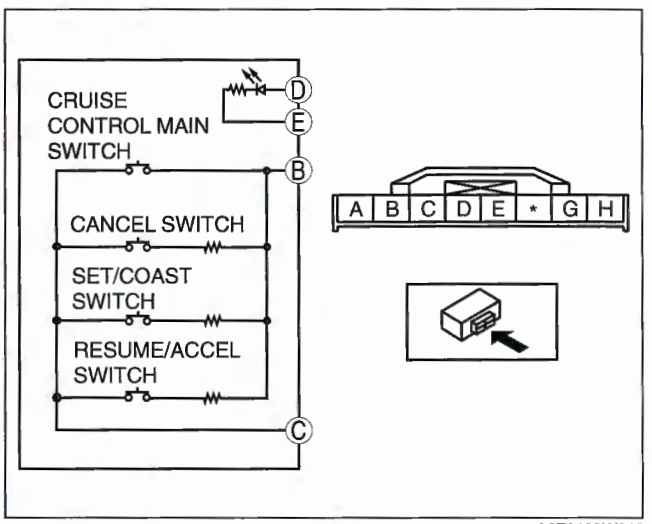

A6E8128W012

O—O: Continuity O-⩘-O: Resistance O-▶|-O: Diode

Switch position	Terminal			
	B	C	D	E
Cruise control main switch held at on	O—O		O—▶|—O	
CANCEL switch held at on	O—⩘—O R_1		O—▶|—O	
SET/COAST switch held at on	O—⩘—O R_2		O—▶|—O	
RESUME/ACCEL switch held at on	O—⩘—O R_3		O—▶|—O	
Neutral			O—▶|—O	

R_1: 118—122 ohms R_2: 667—693 ohms
R_3: 2,156—2,244 ohms

E6U120ZW1001

01–40A CONTROL SYSTEM [L3]

CONTROL SYSTEM COMPONENT LOCATION INDEX [L3] 01–40A–2
CONTROL SYSTEM DIAGRAM [L3] ... 01–40A–3
CONTROL SYSTEM WIRING DIAGRAM [L3] 01–40A–5
California Emission Regulation Applicable ATX Model 01–40A–5
Except for California Emission Regulation Applicable ATX Model ... 01–40A–7
PCM REMOVAL/INSTALLATION [L3] 01–40A–9
PCM INSPECTION [L3]..... 01–40A–9
Using the WDS or Equivalent..... 01–40A–9
Without Using the SST..... 01–40A–15
Inspection Using An Oscilloscope (Reference) 01–40A–21
PCM REPLACEMENT [L3]..... 01–40A–24
CLUTCH PEDAL POSITION (CPP) SWITCH INSPECTION [L3] 01–40A–25
Continuity Inspection 01–40A–25
Circuit Open/Short Inspection 01–40A–25
NEUTRAL SWITCH INSPECTION [L3] 01–40A–26
Continuity Inspection 01–40A–26
Circuit Open/Short Inspection 01–40A–26
POWER STEERING PRESSURE (PSP) SWITCH INSPECTION [L3]..... 01–40A–27
Continuity Inspection 01–40A–27
Circuit Open/Short Inspection 01–40A–27
VARIABLE TUMBLE SHUTTER VALVE SWITCH INSPECTION [L3] 01–40A–28
Voltage Inspection 01–40A–28
Circuit Open/Short Inspection 01–40A–29
ACCELERATOR PEDAL POSITION (APP) SENSOR INSPECTION [L3]..... 01–40A–29
Voltage Inspection 01–40A–29
Circuit Open/Short Inspection 01–40A–30
THROTTLE POSITION (TP) SENSOR INSPECTION [L3]..... 01–40A–30
Voltage Inspection 01–40A–30
Circuit Open/Short Inspection 01–40A–31
MASS AIR FLOW (MAF) SENSOR INSPECTION [L3]..... 01–40A–32
Visual Inspection 01–40A–32
Circuit Open/Short Inspection 01–40A–32
INTAKE AIR TEMPERATURE (IAT) SENSOR INSPECTION [L3]..... 01–40A–33
Resistance Inspection 01–40A–33
Circuit Open/Short Inspection.....01–40A–34
ENGINE COOLANT TEMPERATURE (ECT) SENSOR REMOVAL/INSTALLATION [L3] 01–40A–34
ENGINE COOLANT TEMPERATURE (ECT) SENSOR INSPECTION [L3] 01–40A–35
ECT Sensor Resistance Inspection.....01–40A–35
Circuit Open/Short Inspection.....01–40A–35
MANIFOLD ABSOLUTE PRESSURE (MAP) SENSOR INSPECTION [L3] 01–40A–36
Circuit Open/Short Inspection.....01–40A–36
HEATED OXYGEN SENSOR (HO2S) INSPECTION [L3].....01–40A–37
California Emission Regulation Applicable ATX Model.....01–40A–37
Except for California Emission Regulation Applicable ATX Model....01–40A–41
CRANKSHAFT POSITION (CKP) SENSOR REMOVAL/INSTALLATION [L3] 01–40A–45
Removal 01–40A–45
Installation.....01–40A–45
CRANKSHAFT POSITION (CKP) SENSOR INSPECTION [L3] 01–40A–46
Air Gap Inspection.....01–40A–46
Visual Inspection.....01–40A–46
Voltage Inspection.....01–40A–46
Circuit Open/Short Inspection.....01–40A–47
CAMSHAFT POSITION (CMP) SENSOR REMOVAL/INSTALLATION [L3] 01–40A–47
CAMSHAFT POSITION (CMP) SENSOR INSPECTION [L3].....01–40A–48
Visual Inspection.....01–40A–48
Voltage inspection.....01–40A–48
Circuit Open/Short Inspection.....01–40A–49
KNOCK SENSOR (KS) REMOVAL/INSTALLATION [L3] 01–40A–49
KNOCK SENSOR (KS) INSPECTION [L3] 01–40A–49
Resistance Inspection.....01–40A–49
Circuit Open/Short Inspection.....01–40A–50
BAROMETRIC PRESSURE (BARO) SENSOR INSPECTION [L3 (Vehicles equipped with BARO sensor built into PCM)] 01–40A–50

CONTROL SYSTEM COMPONENT LOCATION INDEX [L3]

E6U014018881W07

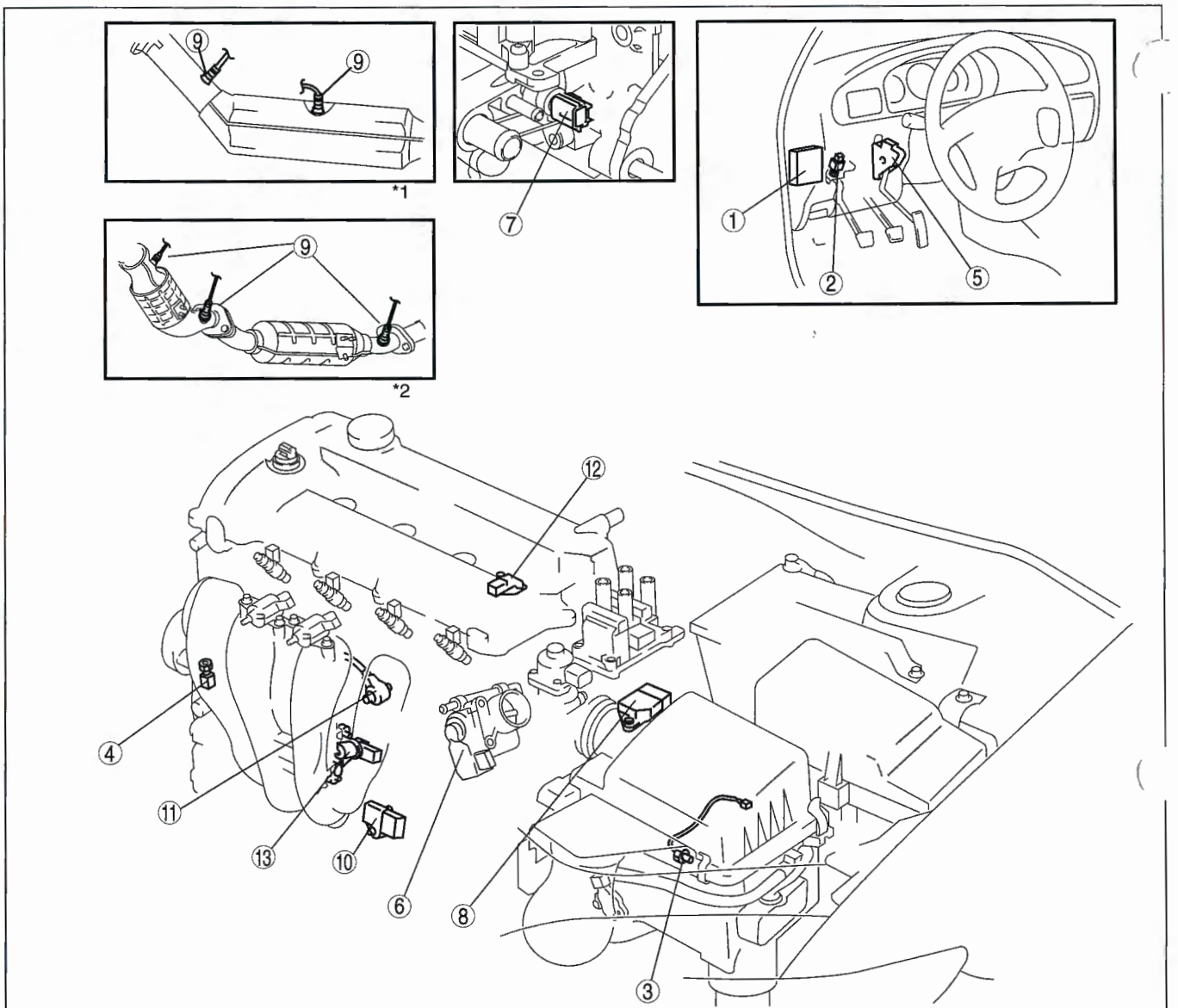

*1:EXCEPT FOR CALIFORNIA EMISSION REGULATION APPLICABLE ATX MODEL
*2:CALIFORNIA EMISSION REGULATION APPLICABLE ATX MODEL

E6U140AW5201

1	PCM (built into BARO sensor) (See 01–40A–9 PCM REMOVAL/INSTALLATION [L3].) (See 01–40A–9 PCM INSPECTION [L3].) (See 01–40A–24 PCM REPLACEMENT [L3].) (See 01–40A–50 BAROMETRIC PRESSURE (BARO) SENSOR INSPECTION [L3 (Vehicles equipped with BARO sensor built into PCM)].)
2	Clutch switch (MTX) (See 01–40A–25 CLUTCH PEDAL POSITION (CPP) SWITCH INSPECTION [L3].)
3	Neutral switch (MTX) (See 01–40A–26 NEUTRAL SWITCH INSPECTION [L3].)
4	PSP switch (See 01–40A–27 POWER STEERING PRESSURE (PSP) SWITCH INSPECTION [L3].)

5	APP sensor (See 01–40A–29 ACCELERATOR PEDAL POSITION (APP) SENSOR INSPECTION [L3].)
6	TP sensor and throttle actuator (See 01–40A–30 THROTTLE POSITION (TP) SENSOR INSPECTION [L3].) (See 01–13A–7 THROTTLE ACTUATOR INSPECTION [L3].) (See 01–13A–4 INTAKE AIR SYSTEM REMOVAL/ INSTALLATION [L3].)
7	ECT sensor (See 01–40A–34 ENGINE COOLANT TEMPERATURE (ECT) SENSOR REMOVAL/ INSTALLATION [L3].) (See 01–40A–35 ENGINE COOLANT TEMPERATURE (ECT) SENSOR INSPECTION [L3].)

8	MAF/IAT sensor (See 01–40A–33 INTAKE AIR TEMPERATURE (IAT) SENSOR INSPECTION [L3].) (See 01–40A–32 MASS AIR FLOW (MAF) SENSOR INSPECTION [L3].)
9	HO2S (See 01–40A–37 HEATED OXYGEN SENSOR (HO2S) INSPECTION [L3].)
10	MAP sensor (See 01–40A–36 MANIFOLD ABSOLUTE PRESSURE (MAP) SENSOR INSPECTION [L3].)
11	KS (See 01–40A–49 KNOCK SENSOR (KS) REMOVAL/INSTALLATION [L3].) (See 01–40A–49 KNOCK SENSOR (KS) INSPECTION [L3].)
12	CMP sensor (See 01–40A–48 CAMSHAFT POSITION (CMP) SENSOR INSPECTION [L3].) (See 01–40A–48 CAMSHAFT POSITION (CMP) SENSOR INSPECTION [L3].)
13	CKP sensor (See 01–40A–45 CRANKSHAFT POSITION (CKP) SENSOR REMOVAL/INSTALLATION [L3].) (See 01–40A–46 CRANKSHAFT POSITION (CKP) SENSOR INSPECTION [L3].)

CONTROL SYSTEM DIAGRAM [L3]

E6U014018881W08

California emission regulation applicable ATX model

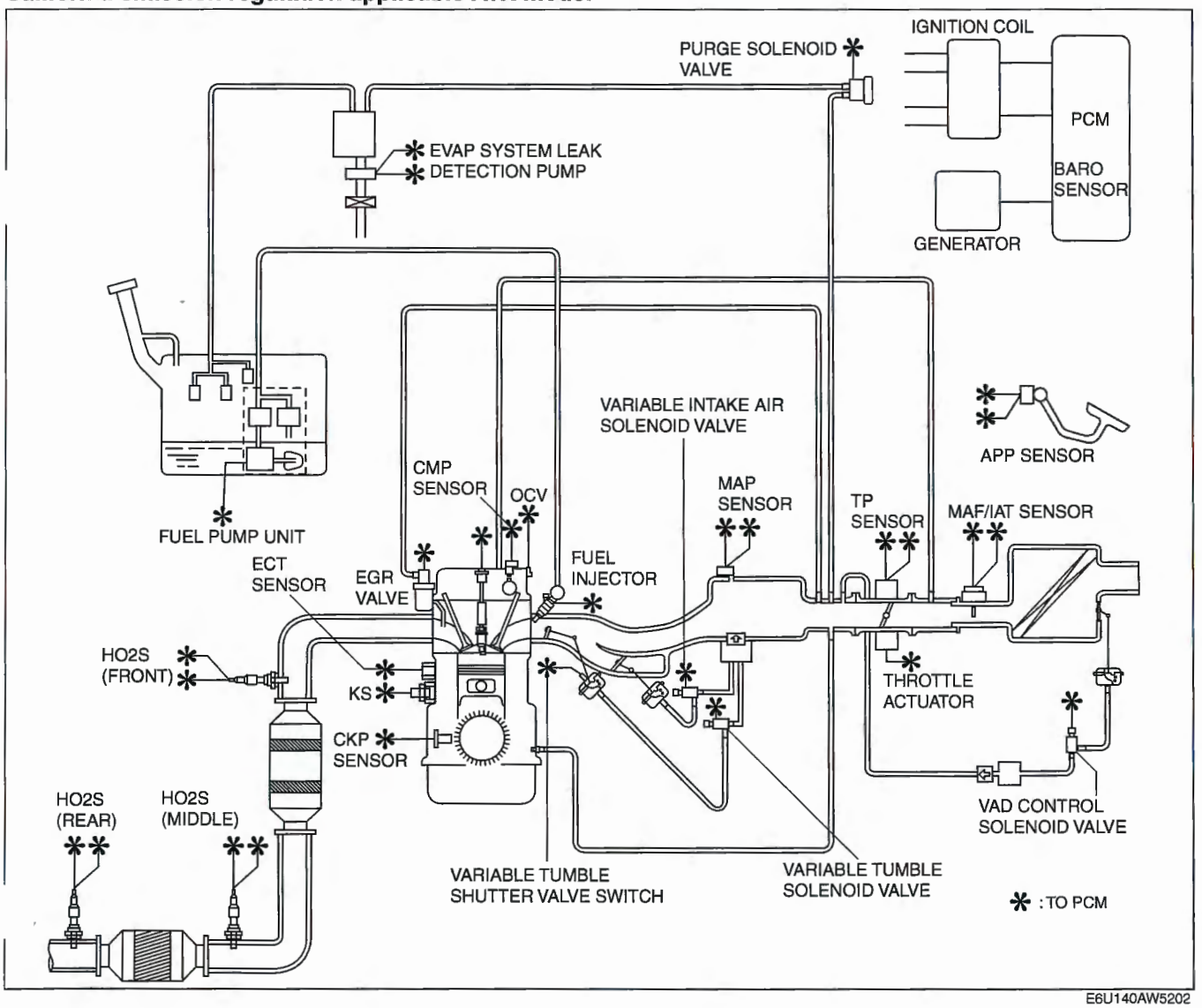

E6U140AW5202

Except for California emission regulation applicable ATX model

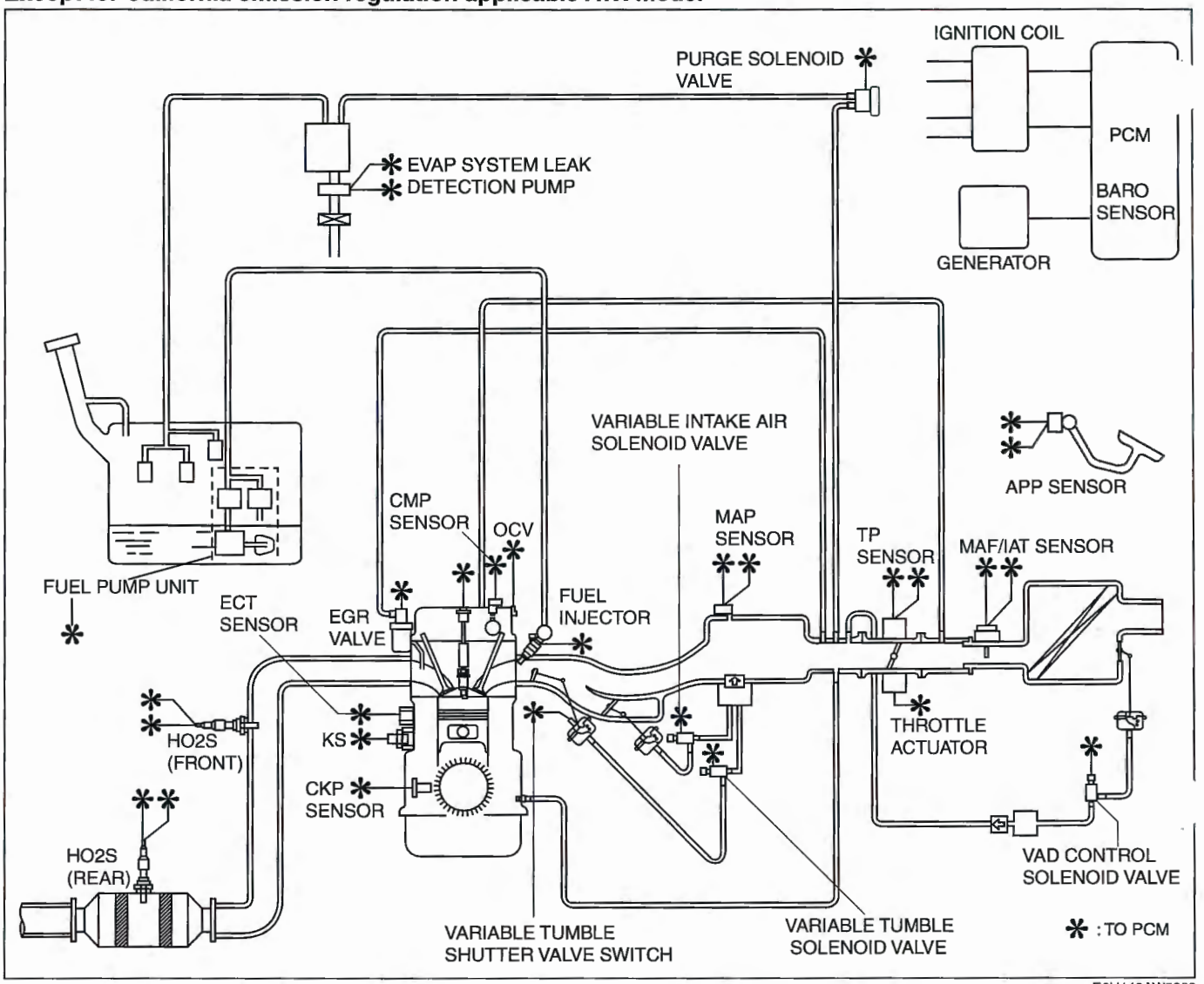

E6U140AW5203

CONTROL SYSTEM WIRING DIAGRAM [L3]

E6U014018881W10

California Emission Regulation Applicable ATX Model

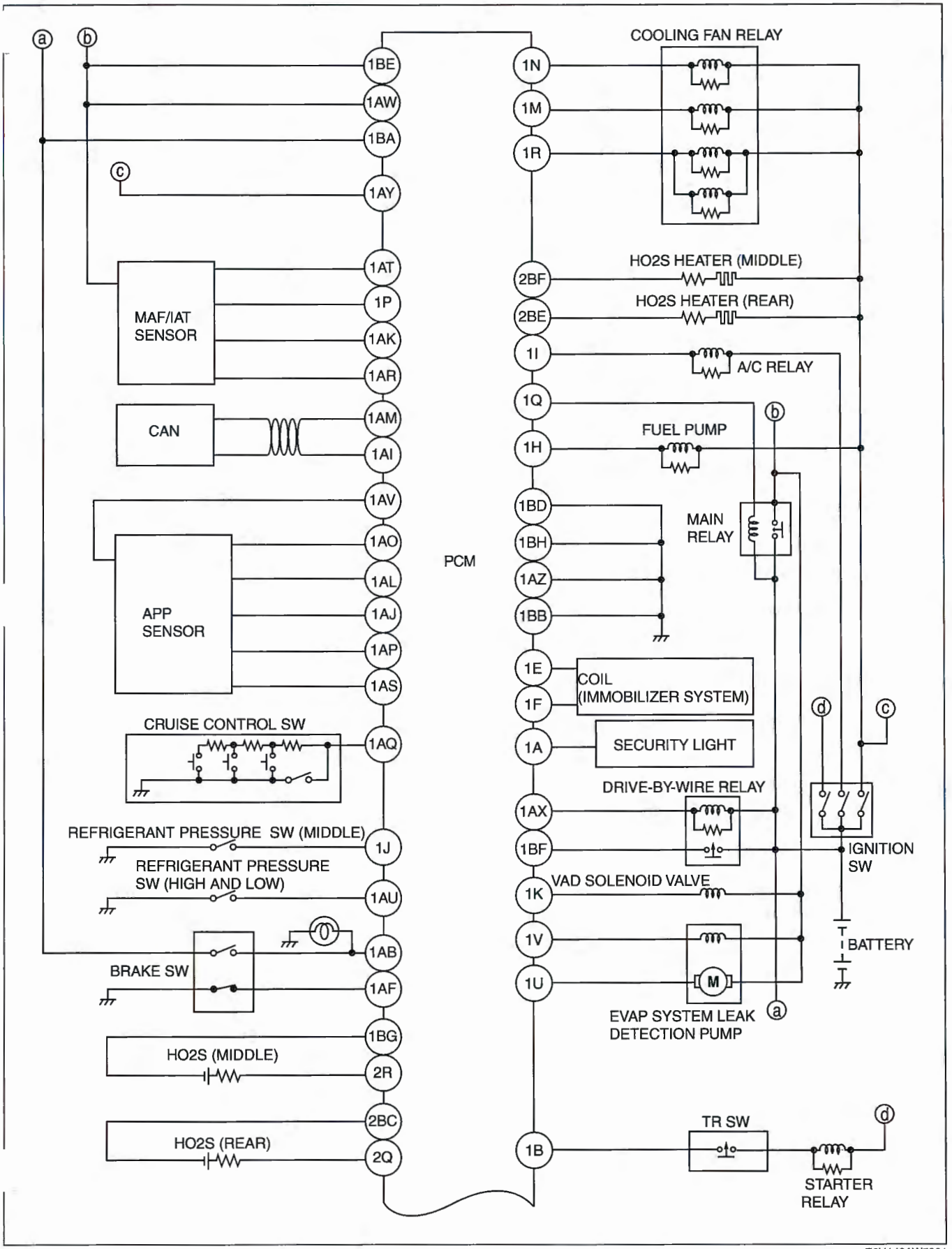

E6U140AW5901

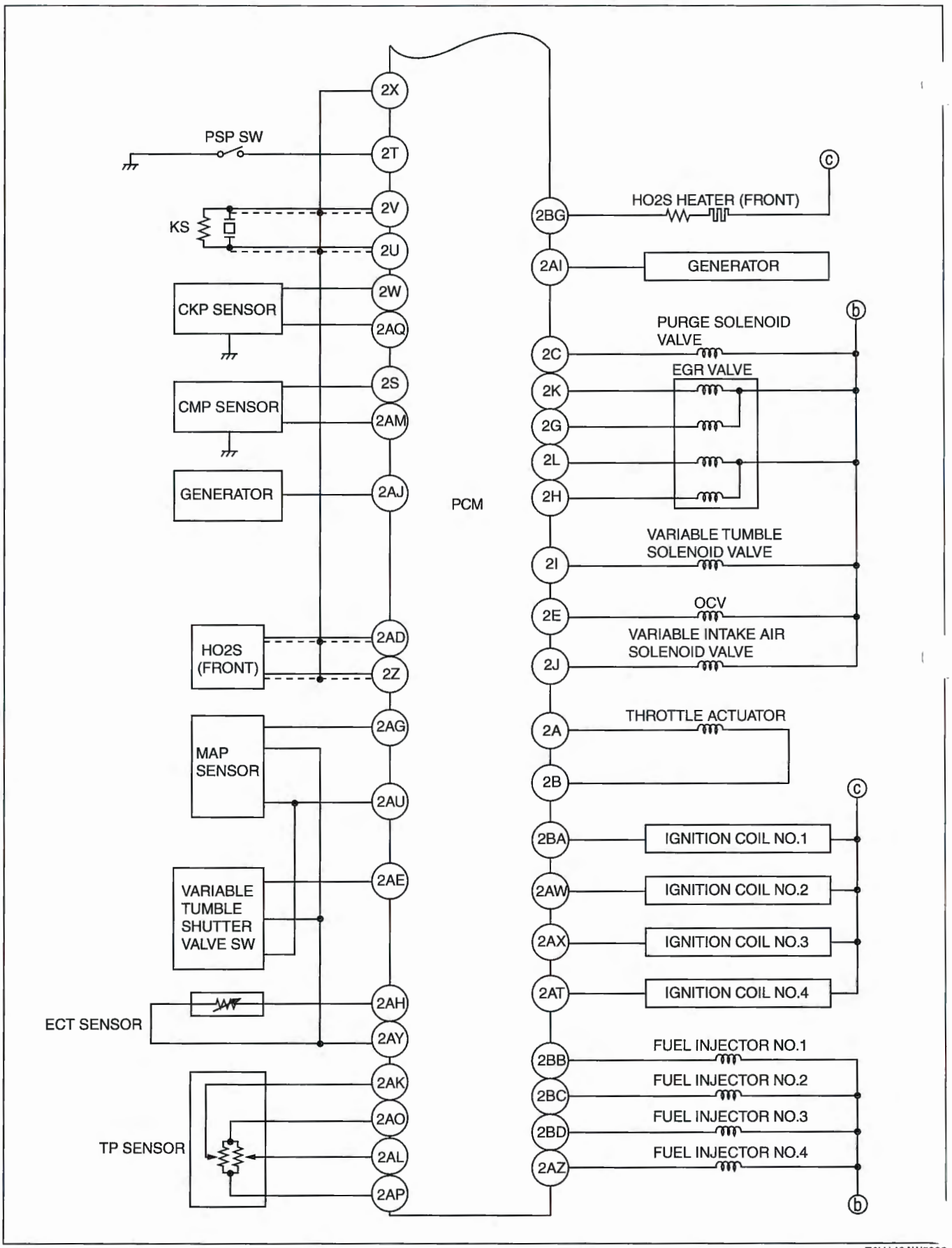

E6U140AW5902

Except for California Emission Regulation Applicable ATX Model

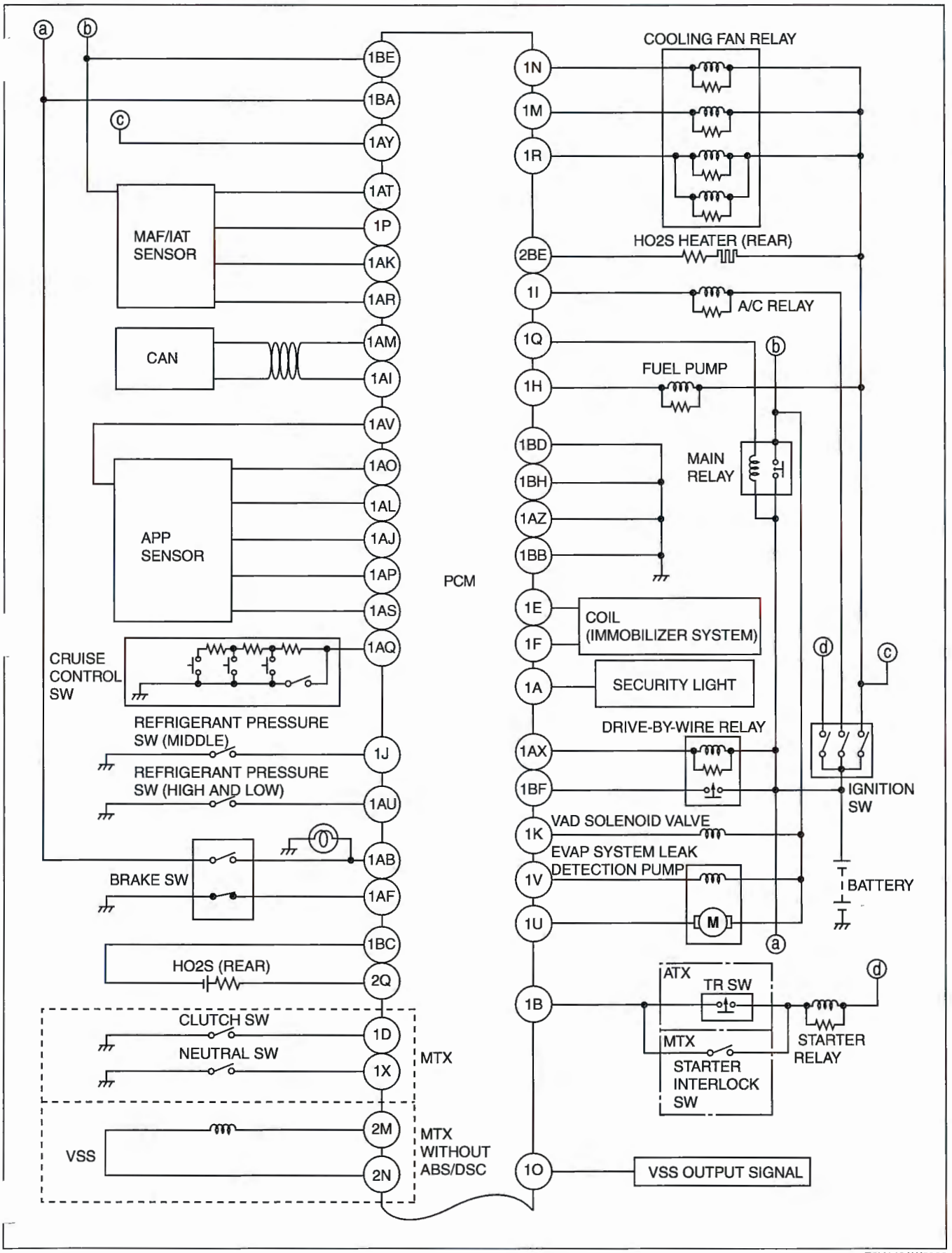

E6U140AW5903

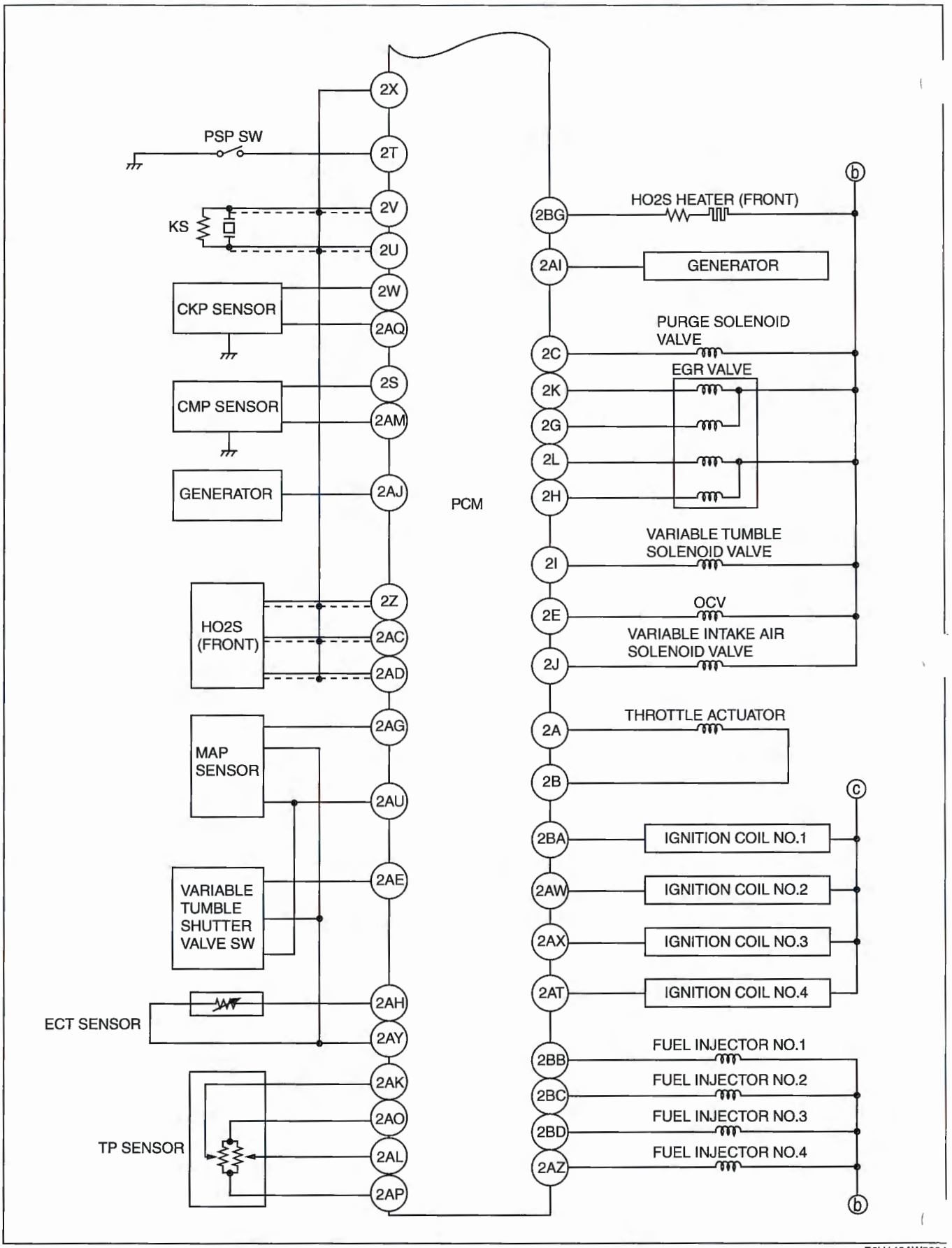

E6U140AW5904

PCM REMOVAL/INSTALLATION [L3]

E6U014018880W07

Note
- For PCM replacement, setup the WDS and perform the PCM configuration. (See 01–40A–24 PCM REPLACEMENT [L3].)

1. Disconnect the negative battery cable.
2. Remove in the order indicated in the table.
3. Install in the reverse order of removal.

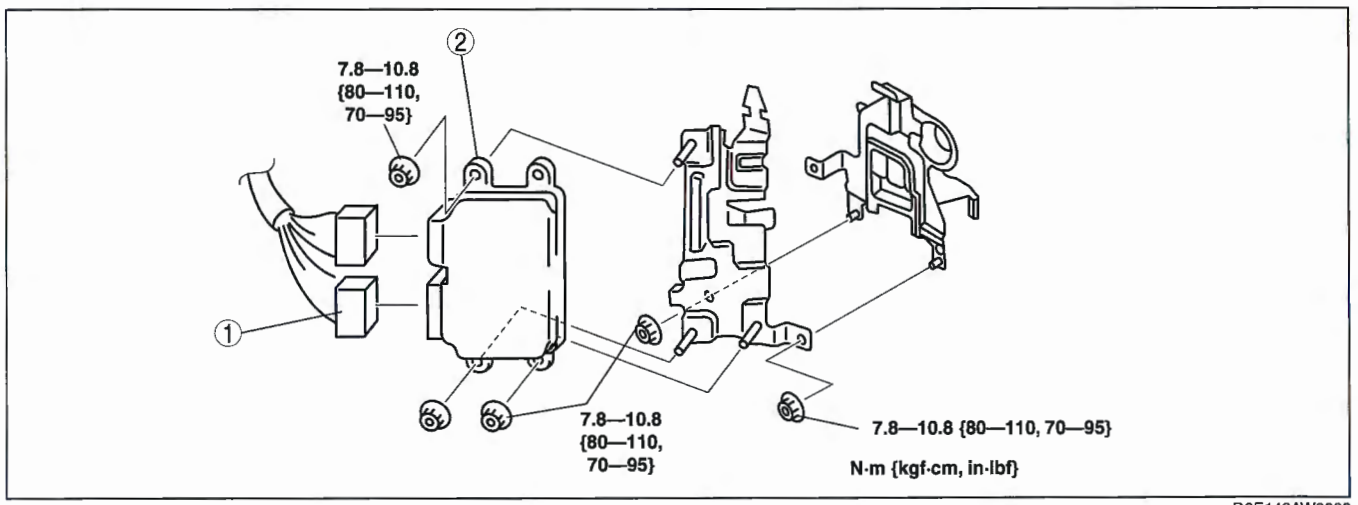

D6E140AW3002

1	PCM connector	2	PCM

M INSPECTION [L3]

E6U014018880W08

Using the WDS or Equivalent

Note
- PIDs for the following parts are not available on this model. Perform the specific inspections for the following parts:
  - — CMP sensor (See 01–40A–48 CAMSHAFT POSITION (CMP) SENSOR INSPECTION [L3].)
  - — Main relay (See 09–21–7 RELAY INSPECTION.)

1. Connect the WDS or equivalent to the DLC-2.
2. Turn the ignition switch to ON position.
3. Measure the PID value.
   - If PID value is not within the specification, follow the instructions in Action column.

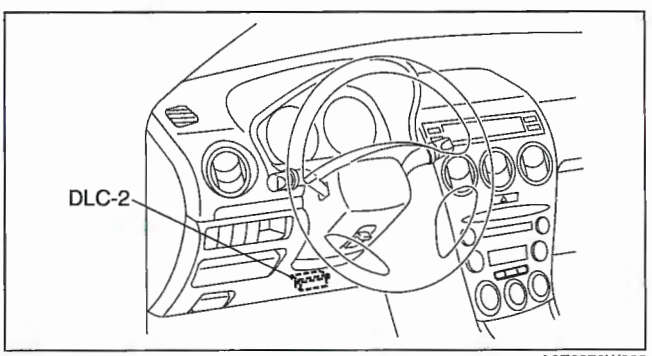

A6E3970W002

Note
- The PID/DATA MONITOR function monitors the calculated value of the input/output signals in the PCM. Therefore, an output device malfunction is not directly indicated as a malfunction of the monitored value for the output device. If a monitored value of an output device is out of specification, inspect the monitored value of the input device related to the output control.
- For input/output signals except those of the monitoring items, use a voltmeter to measure the PCM terminal voltage.
- The simulation items that are used in the ENGINE CONTROL SYSTEM OPERATION INSPECTION are as follows.
  - — ACCS, ALTF, EVAPCP, FAN1, FAN2, FAN3, FP, FUELPW1, GENVDSD, HTR11, HTR12, HTR13*, IASV, IMRC, IMTV, INJ_1, INJ_2, INJ_3, INJ_4, SEGRP, test, VT DUTY1 Wt

* : California emission regulation applicable ATX model

PID/DATA monitor table (reference)

Monitor item (Definition)	Unit/ Condition	Condition/Specification (Reference)	Action	PCM terminal
AAT	°C / °F	Ignition switch at ON position: Indicate the ambient air temperature	Inspect IAT sensor. (See 01–40A–33 INTAKE AIR TEMPERATURE (IAT) SENSOR INSPECTION [L3])	—
AC_REQ (A/C request signal)	ON/OFF	A/C switch and fan switch ON at ignition switch ON: On A/C switch OFF at ignition switch ON: Off	Inspect A/C switch.	1AU
ACCS (A/C relay)	ON/OFF	Ignition switch ON: OFF A/C switch ON and fan switch ON at idle: ON	Inspect following PIDs: RPM, TP, ECT, ACSW, TR. Inspect A/C relay.	1I
AFR (Air fuel ratio)	—	Ignition switch at ON position: Indicate the air fuel ratio*4	Inspect following PIDs: O2S11, O2S12, O2S13*1. Inspect fuel injector.	—
AFR_ACT (Actual air fuel ratio)	—	Ignition switch at ON position: Indicate the actual air fuel ratio	Inspect following PIDs: O2S11, O2S12, O2S13*1. Inspect fuel injector.	—
ALTF (Generator field coil control duty value)	%	Ignition switch ON: 0% Idle: 0—100% Just after A/C switch ON and fan switch ON at idle: Duty value rises	Inspect following PIDs: IAT, ECT, RPM, VPWR, ALTT V. Inspect generator.	2AI
ALTT V (Generator output voltage)	V	Ignition switch ON: 0 V Idle: Approx. 14.9 V (E/L not operating)	Inspect generator.	2AJ
APP (Accelerator pedal position)	%	APP released: 0% APP open: 100%	Inspect following PIDs: APP1, APP2. Inspect accelerator pedal position sensor.	1AO 1AP
APP 1 (Accelerator pedal position sensor 1)	%	APP released: 31.0—32.4% APP open: 69.8—81.8%	Inspect accelerator pedal position sensor.	1AO
	V	APP released: 1.55—1.62 V APP depressed: 3.49—4.09 V		
APP 2 (Accelerator pedal position sensor 2)	%	APP released: 20.2—21.4% APP depressed: 58.8—70.8%	Inspect accelerator pedal position sensor.	1AP
	V	APP released: 1.01—1.07 V APP depressed: 2.94—3.54 V		
ARPMDES (Target engine speed)	RPM	No load: 700 rpm E/L operating: 700 rpm P/S operating: 700 rpm A/C ON: 750 rpm	Inspect following PIDs: IAT, RPM, MAP, ECT, MAF, TP, INGEAR, ACSW, TR, PSP, ALTT V. Inspect IAC valve. Inspect CKP sensor.	—
BARO (Barometric pressure)	kPa, Bar, psi	Ignition switch ON: Indicate the atmospheric pressure	Inspect BARO sensor.	—
	V	Ignition switch ON (at sea level): Approx. 4.0 V		
BOO (Brake switch)	ON/OFF	Brake pedal depressed: ON Brake pedal released: OFF	Inspect brake switch.	1AB 1AF
BPA (Brake pressure applied switch)	ON/OFF	Brake pedal depressed: ON Brake pedal released: OFF	Inspect brake switch.	—
CATT11_DSD (Desired catalyst temperature bank one, sensor one)	°C	Indicate the estimated catalytic converter temperature	Perform applicable DTC troubleshooting. (See 01–02A–18 DTC TABLE [L3])	—
CHRGLP (Generator warning light)	ON/OFF	Ignition switch ON: ON Idle: OFF	Perform applicable DTC troubleshooting. (See 01–02A–18 DTC TABLE [L3].)	—
COLP (Refrigerant pressure switch (middle))	ON/OFF	Refrigerant pressure switch (middle) ON *5 at idle: ON Refrigerant pressure switch (middle) OFF*6 at idle: OFF	Inspect refrigerant pressure switch.	1J

Monitor item (Definition)	Unit/ Condition	Condition/Specification (Reference)	Action	PCM terminal
CPP*3 (Clutch pedal position)	ON/OFF	Clutch pedal depressed: ON Clutch pedal released: OFF	Inspect clutch pedal position switch.	1D
CPP/PNP*3 (Shift lever position)	Drive/ Neutral	Neutral position: Neutral Others: Drive	Inspect neutral switch.	1X
DTCCNT (Number of DTC detected)	—	—	Perform applicable DTC troubleshooting. (See 01–02A–18 DTC TABLE [L3].)	—
ECT (Engine coolant temperature)	°C / °F	ECT 20 °C {68 °F}: 20 °C {68 °F} ECT 60 °C {140 °F}: 60 °C {140 °F}	Inspect ECT sensor.	2AH
	V	ECT 20 °C {68 °F}: 3.04—3.14 V ECT 60 °C {140 °F}: 1.29—1.39 V		
EQ_RAT11 (Equivalence ratio (lambda))	—	Idling after warm-up: Approx. 1	Perform applicable DTC troubleshooting. (See 01–02A–18 DTC TABLE [L3].)	2Z 2AC 2AD
EQ_RAT11_DSD (Desired equivalence ratio (lambda))	—	Idling after warm-up: Approx. 1	Perform applicable DTC troubleshooting. (See 01–02A–18 DTC TABLE [L3].)	2Z 2AC 2AD
ETC_ACT (Electronic throttle control actual)	°	Indicate the desired TP by angle	Perform applicable DTC troubleshooting. (See 01–02A–18 DTC TABLE [L3].)	2AL 2AK
ETC_DSD (Electronic throttle control desired)	%	Indicate the desired TP by percent	Inspect following PIDs:APP1, APP2, ETC_ACT. Inspect TP sensor.	1AO 1AP
	°	Indicate the desired TP by angle		
EVAPCP (Purge solenoid valve duty value)	%	Ignition switch ON: 0% Idle: 0%	Inspect following PIDs: IAT, RPM, ECT, MAF, O2S11, INGEAR, TR, VPWR.	2C
FAN1 (Cooling fan control)	ON/OFF	ECT less than 100 °C {212 °F}: OFF Others: ON	Inspect following PIDs: RPM, TP, ECT, ACSW, COLP, TEST. Inspect cooling fan relay.	1M
FAN2 (Cooling fan control)	ON/OFF	ECT less than 108 °C {226 °F}: OFF A/C operating, refrigerant pressure switch (middle) is OFF, and ECT less than 108 °C {226 °F}: OFF Others: ON	Inspect following PIDs: RPM, TP, ECT, ACSW, COLP, TEST. Inspect cooling fan relay.	1R
FAN3 (Cooling fan control)	ON/OFF	ECT less than 100 °C {212 °F}: OFF A/C operating, refrigerant pressure switch (middle) is ON, and ECT less than 108 °C {226 °F}: OFF Other: ON	Inspect following PIDs: RPM, TP, ECT, ACSW, COLP, TEST. Inspect cooling fan relay.	1R
FLI (Fuel level)	%	Fuel gauge level F: Approx. 100% Fuel gauge level E: Approx. 0%	Perform applicable DTC troubleshooting. (See 01–02A–18 DTC TABLE [L3])	—
FP (Fuel pump relay)	ON/OFF	Ignition switch ON: OFF Idle: ON Cranking: ON	Inspect following PIDs: RPM. Inspect fuel pump relay.	1H
FUELPW (Fuel injector duration)	ms	Ignition switch ON: 0 ms Idle (after warm up): approx. 2.5 ms	Inspect following PIDs: IAT, MAF, TP, MAP, ECT, RPM, O2S11, O2S12, INGEAR, TR, PSP, ACSW, VPWR, ALTT V. Inspect fuel injector.	2AZ 2BB 2BC 2BD
FUELSYS (Fuel system status)	OL/CL/ OL-Drive/ OL-Fault/ CL-Fault	Ignition switch ON: Open loop Idle (after warm up): Closed loop	Inspect following PIDs: IAT, MAF, TP, MAP, ECT, RPM, O2S11, O2S12, INGEAR, TR, PSP, ACSW, VPWR, ALTT V. Inspect fuel injector.	—
GENVDSD (Generator voltage desired)	V	Ignition switch ON: 0 V Idle: Approx. 14.9 V (E/L not operating)	Perform applicable DTC troubleshooting. (See 01–02A–18 DTC TABLE [L3].)	—
HTR11 (HO2S heater (front))	ON/OFF	Idle (after warm up): ON⇔OFF	Inspect following PIDs: IAT, MAF, TP, ECT, RPM, ACSW.	2BG

Monitor item (Definition)	Unit/ Condition	Condition/Specification (Reference)	Action	PCM terminal
HTR12 (HO2S heater (middle*1, rear*2))	ON/OFF	Ignition switch ON: OFF (HO2S heater not operating) Idle: ON (HO2S heater operating)	Inspect following PIDs: IAT, MAF, ECT, RPM, ACSW.	2BF*1 2BE*2
HTR13*1 (HO2S heater (rear))	ON/OFF	Ignition switch ON: OFF (HO2S heater not operating) Idle: ON (HO2S heater operating)	Inspect following PIDs: IAT, MAF, ECT, RPM, ACSW.	2BE
IASV (Variable air duct control solenoid valve)	ON/OFF	ECT is more than 70 °C {158 °F}, engine speed is more than 5,800 rpm, and TP opening angle is more than 50%: ON Others: OFF	Inspect following PIDs: ECT, RPM, TP. Inspect VAD solenoid valve.	1K
IAT (Intake air temperature)	°C | °F	Indicate the IAT.	Inspect IAT sensor.	1AT
	V	IAT 0 °C {32 °F}: Approx. 3.43 V IAT 20 °C {68 °F}: Approx. 2.38 V IAT 40 °C {104 °F}: Approx. 1.49 V		
IMRC (Variable tumble solenoid valve)	ON/OFF	Engine speed is less than approx. 3,750 rpm: ON Others: OFF	Inspect following PIDs: TP, ECT, RPM. Inspect variable tumble solenoid valve.	2I
IMTV (Variable Intake air control solenoid valve)	ON/OFF	Engine speed is less than approx. 4,500 rpm: ON Others: OFF	Inspect following PIDs: RPM. Inspect VIS control solenoid valve.	2J
INGEAR (Load/no load condition)	ON/OFF	CPP or CPP/PNP is ON: OFF Others: ON	Perform applicable DTC troubleshooting.	1D 1X
IVS (CTP condition)	IDLE/ OFF IDLE	CTP: IDLE Others: OFF IDLE	Perform applicable DTC troubleshooting.	1AO 1AP
KNOCKR (Knocking retard)	°	Ignition switch ON: 0° Idle: 0°	Inspect knock sensor.	2U 2V
LDP_EVAPCP (EVAP system leak detection pump detect incorrect purge flow)	mA	Indicate the EVAP control system incorrect purge flow detection value	Perform applicable DTC troubleshooting. (See 01–02A–18 DTC TABLE [L3])	—
LDP_IDL (EVAP system leak detection pump idle current)	mA	Indicate the EVAP system leak detection pump idle current	Perform applicable DTC troubleshooting. (See 01–02A–18 DTC TABLE [L3])	—
LDP_MON (EVAP system leak detection pump monitoring current)	mA	Indicate the EVAP system leak detection pump monitoring current	Perform applicable DTC troubleshooting. (See 01–02A–18 DTC TABLE [L3])	—
LDP_REF (EVAP system leak detection pump reference current)	mA	Indicate the EVAP system leak detection pump reference current	Perform applicable DTC troubleshooting. (See 01–02A–18 DTC TABLE [L3])	—
LDP_SLDV (EVAP system small leak detection value)	mA	Indicate the EVAP control system small leak detection value	Perform applicable DTC troubleshooting. (See 01–02A–18 DTC TABLE [L3])	—
LDP_VSL_FV*7 (EVAP system small leak detection value)	mA/sec	Indicate the EVAP control system vary small leak-fail value	Perform applicable DTC troubleshooting. (See 01–02A–18 DTC TABLE [L3])	—
LDP_VSL_SV*7 (EVAP system small leak detection value)	mA/sec	Indicate the EVAP control system vary small leak-safe value	Perform applicable DTC troubleshooting. (See 01–02A–18 DTC TABLE [L3])	—
LDP_VSLDV*7 (EVAP system small leak detection value)	mA/sec	Indicate the EVAP control system vary small leak detection value	Perform applicable DTC troubleshooting. (See 01–02A–18 DTC TABLE [L3])	—
LOAD (Engine load)	%	Ignition switch ON: 0% Idle (after warm up): approx.19%	Inspect MAF sensor.	—
LONGFT1 (long term fuel trim)	%	Idle (after warm up): approx. –14—14%	Perform applicable DTC troubleshooting. (See 01–02A–18 DTC TABLE [L3].)	—

Monitor item (Definition)	Unit/ Condition	Condition/Specification (Reference)	Action	PCM terminal
MAF (Mass airflow)	g/s	Ignition switch ON: approx. 0 g/s Idle (after warm up): approx. 1.5 g/s	Inspect MAF sensor.	1AK
	V	Ignition switch ON: approx. 0.7 V Idle (after warm up): approx. 1.3 V		
MAP (Manifold absolute pressure)	kPa, inHg	Ignition switch ON (at sea level): approx. 101 kPa {29.8 inHg}	Inspect MAP sensor.	2AG
	V	Ignition switch ON (at sea level): approx. 4.1 V		
MIL (Malfunction indicator lamp)	ON/OFF	Ignition switch ON: ON Idle: OFF	Perform applicable DTC troubleshooting. (See 01–02A–18 DTC TABLE [L3].)	—
MIL_DIS (Travelled distance since the MIL illuminated)	km, mile	No DTC: 0 km {0 mile} DTC detected: Not 0 km {0 mile}	Perform applicable DTC troubleshooting. (See 01–02A–18 DTC TABLE [L3].)	—
NUMKEYS (Number of keys stored in module)	—	Indicate the number of the keys stored module	—	—
O2S11 (Front oxygen sensor)	A	Ignition switch ON: 0—1.0 V Idle (After warm up): 0—1.0 V	Inspect HO2S (front).	2Z 2AC*2 2AD
O2S12 (middle*1, rear*2 oxygen sensor)	V	Idle (After warm up): approx. 0.6 V	Inspect HO2S (middle*1, rear*2).	2R*1 2Q*2
O2S13*1 (rear oxygen sensor)	V	Idle (After warm up): approx. 0.6 V	Inspect HO2S (rear).	2Q
PSP (Power steering pressure switch)	Low/High	Steering wheel in straight ahead position: Low Others: High	Inspect PSP switch.	2T
RFCFLAG (Readness function code)	Learnt/Not Learnt	Before running PCM adaptive memory procedure drive mode: Not Learnt After running PCM adaptive memory procedure drive mode: Learnt	Run PCM adaptive memory procedure drive mode.	—
RO2FT1 (rear oxygen sensor fuel trim)	—	Idle (after warm up): approx. –0.03—0.03	Perform applicable DTC troubleshooting.	—
RPM (Engine speed)	rpm	Indicate the engine speed	Inspect CKP sensor.	2W
SCCS (Speed control command switch)	V	Press ON/OFF: Approx. 0 V Press CANCEL: Approx. 1.2 V Press SET/COAST: Approx. 3.2 V Press RES/ACCEL: Approx. 4.2 V Others: Approx. 5.0 V	Inspect cruise control switch.	—
SEGRP (EGR valve (stepping motor) position)	Step	Ignition switch ON: 0 step Idle: 0 step Cranking: 0—60 steps	Inspect following PIDs: MAF, TP, ECT, RPM, VSS. Inspect EGR valve.	2G 2H 2K 2L
SEGRP DSD (Desired SEGRP valve position)	%	Idle: 0%	Inspect following PIDs: MAF, TP, ECT, RPM, VSS.	2G 2H 2K 2L
SHRTFT1 (Short term fuel trim)	%	Idle (after warm up): approx.–30—25%	Perform applicable DTC troubleshooting. (See 01–02A–18 DTC TABLE [L3].)	—
SHRTFT12 (Short term fuel trim bank 1 sensor 2)	%	Idle (after warm up): Approx.–30—25%	Perform applicable DTC troubleshooting. (See 01–02A–18 DTC TABLE [L3].)	—
SHRTFT13*1 (Short term fuel trim bank 1 sensor 3)	%	Idle (after warm up): Approx.–30—25%	Perform applicable DTC troubleshooting. (See 01–02A–18 DTC TABLE [L3].)	—

Monitor item (Definition)	Unit/ Condition	Condition/Specification (Reference)	Action	PCM terminal
SPARKADV (Ignition timing)	°	Ignition switch ON: BTDC 0° Idle: BTDC approx. 10°	Inspect following PIDs: MAF, TP, ECT, RPM, INGEAR, TR, PSP, ACSW, VPWR. Inspect ignition timing.	2AT 2AW 2AX 2BA
test (Test mode)	ON/OFF	—	—	—
TIRESIZE (Tire Size (rev / mile))	rev/mile	Indicate the tire circumference length	—	—
TP REL (Relative throttle position)	%	APP released: Approx. 10% APP depressed: Approx. 93%	Inspect TP sensor.	—
TP 1 (TP)	%	APP released: 8—12% APP depressed: 88—94%	Inspect TP sensor.	2AK
	V	APP released: 0.4—0.6 V APP depressed: 4.4—4.7 V		
TP 2 (TP)	%	APP released: 88—92% APP depressed: 6—12%	Inspect TP sensor.	2AL
	V	APP released: 4.4—4.6 V APP depressed: 0.3—0.6 V		
TPCT (TP sensor voltage at CTP)	V	Approx. 0.5 V	Inspect TP sensor.	2AK 2AL
VPWR (Module supply voltage)	V	Indicate the Module supply voltage.	Inspect battery.	—
VSS (Vehicle speed)	kph, mph	Vehicle speed 20 kph {12 mph}: 20 kph {12 mph} Vehicle speed 40 kph {25 mph}: 20 kph {12 mph}	Perform applicable DTC troubleshooting. (See 01–02A–18 DTC TABLE [L3].)	—
VT ACT1 (Actual valve timing)	°	Idle: Approx. 0°	Inspect following PIDs: TP, ECT, RPM. Inspect OCV.	2E
VT DIFF1 (Difference between target and actual valve timing)	°	Idle: Approx. 0°	Inspect following PIDs: TP, ECT, RPM. Inspect OCV.	2E
VT DUTY1 (Oil control valve duty value)	%	Idle: Approx. 11.5%	Inspect following PIDs: TP, ECT, RPM. Inspect OCV.	2E
VTC (Variable tumble shutter valve control)	Off/On	Indicate the condition of the variable tumble shutter valve switch	Inspect following PIDs: IMRC Inspect variable tumble shutter valve switch.	2AE

*1 : California emission regulation applicable ATX model
*2 : Except for California emission regulation applicable ATX model
*3 : MTX
*4 : Calculated value; differs from terminal voltage
*5 : Refrigerant pressure switch (middle) turns off when the refrigerant pressure is 1.26—1.49 MPa {12.9—15.1 kgf/cm^6, 184—214 psi}
*6 : Refrigerant pressure switch (middle) turns on when the refrigerant pressure is 1.69—1.84 MPa {17.3—18.7 kgf/cm^2, 247—265 psi}
*7 : California emission regulation applicable model

Without Using the SST

Caution

- **The PCM terminal voltages vary with change in measuring conditions and vehicle conditions. Always carry out a total inspection of the input systems, output systems, and PCM to determine the cause of trouble. Otherwise, a wrong diagnosis will be made.**

1. Measure the voltage at each terminal.
   - If any incorrect voltage is detected, inspect the related system(s), wiring harnesses and connector(s) referring to the Action column in the terminal voltage table.

Terminal voltage table (Reference)

PCM
HARNESS SIDE CONNECTOR

2BE	2BA	2AW	2AS	2AO	2AK	2AG	2AC	2Y	2U	2Q	2M	2I	2E	2A
2BF	2BB	2AX	2AT	2AP	2AL	2AH	2AD	2Z	2V	2R	2N	2J	2F	2B
2BG	2BC	2AY	2AU	2AQ	2AM	2AI	2AE	2AA	2W	2S	2O	2K	2G	2C
2BH	2BD	2AZ	2AV	2AR	2AN	2AJ	2AF	2AB	2X	2T	2P	2L	2H	2D

1BE	1BA	1AW	1AS	1AO	1AK	1AG	1AC	1Y	1U	1Q	1M	1I	1E	1A
1BF	1BB	1AX	1AT	1AP	1AL	1AH	1AD	1Z	1V	1R	1N	1J	1F	1B
1BG	1BC	1AY	1AU	1AQ	1AM	1AI	1AE	1AA	1W	1S	1O	1K	1G	1C
1BH	1BD	1AZ	1AV	1AR	1AN	1AJ	1AF	1AB	1X	1T	1P	1L	1H	1D

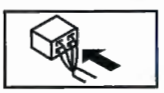

E6U140AW5990

Terminal	Signal	Connected to	Test condition		Voltage (V)	Inspection item
1A	Security light control	Security light	IG SW ON		Approx. 11.3	• Related wiring harness
1B	Starter relay control	Starter relay	Under any condition		Below 1.0	• Starter relay • Related wiring harnesses
1C	—	—	—		—	—
1D	Clutch operation*1	CPP switch	Clutch pedal depressed		Below 1.0	• CPP switch • Related wiring harnesses
			Clutch pedal released		B+	
1E	Coil (Immobilizer system)	Coil	Because this terminal is for communication, good/no good judgment by terminal voltage is not possible.			• Coil • Related wiring harnesses
1F	Coil (Immobilizer system)	Coil	Because this terminal is for communication, good/no good judgment by terminal voltage is not possible.			• Coil • Related wiring harnesses
1G	—	—	—		—	—
1H	Fuel pump control	Fuel pump relay	Ignition switch ON		B+	• Fuel pump relay • Related wiring harnesses
			Cranking		Below 1.0	
			Idle		Below 1.0	
1I	A/C	A/C relay	A/C operating		Below 1.0	• A/C
			A/C not operating		B+	
1J	A/C compressor load	Refrigerant pressure switch (middle)	A/C ON	Refrigerant pressure is more than 1.52 MPa {15.5 kgf/cm^2, 220 psi}	Below 1.0	• Refrigerant pressure switch • Related wiring harnesses
				Refrigerant pressure is less than 1.23 MPa {12.5 kgf/cm^2, 178 psi}	B+	

Terminal	Signal	Connected to	Test condition		Voltage (V)	Inspection item
1K	VAD control	VAD solenoid valve	Idle after warm up	Engine speed less than 5,800 rpm	B+	• VAD solenoid valve • Related wiring harnesses
				Engine speed more than 5,800 rpm	Below 1.0	
1L	—	—	—		—	—
1M	Cooling fan control (Main)	Cooling fan relay No.1	Idling	ECT less than 100 °C {212 °F}	B+	• Cooling fan relay • Related wiring harnesses
				A/C operating	Below 1.0	
1N	Cooling fan control (Add)	Cooling fan relay No.4	Idling	ECT less than 100 °C {212 °F}	B+	• Cooling fan relay • Related wiring harnesses
				A/C operating	Below 1.0	
1O	VSS output signal	VSS	• Inspect using the wave profile. (See 01–40A–21 Inspection Using An Oscilloscope (Reference).)			• Related wiring harnesses
1P	MAF sensor GND	MAF/IAT sensor	Under any condition		Below 1.0	• Related wiring harnesses
1Q	Main relay control	Main relay	Ignition switch OFF		B+	• Main relay • Related wiring harnesses
			Ignition switch ON		Below 1.0	
1R	Cooling fan control (Transfer)	Cooling fan relay No.2 or No.3	Idling	ECT less than 100 °C {212 °F}	B+	• Cooling fan relay • Related wiring harnesses
				A/C operating	Below 1.0	
1S	—	—	—		—	—
1T	—	—	—		—	—
1U	EVAP system leak detection pump (pump)	EVAP system leak detection pump	Ignition switch ON		B+	• EVAP system leak detection pump • Related wiring harness
			Idle		B+	
1V	EVAP system leak detection pump (solenoid)	EVAP system leak detection pump	IG SW ON		B+	• EVAP system leak detection pump • Related wiring harnesses
			Idle		B+	
1W	—	—	—		—	—
1X	Neutral position*1	Neutral switch	Shift lever is at neutral position		Below 1.0	• Neutral switch • Related wiring harnesses
			Shift lever is not at neutral position		B+	
1Y	—	—	—		—	—
1Z	—	—	—		—	—
1AA	—	—	—		—	—
1AB	Brake1	Brake switch	Brake pedal depressed		B+	• Brake switch • Related wiring harnesses
			Brake pedal released		Below 1.0	
1AC	—	—	—		—	—
1AD	—	—	—		—	—
1AE	—	—	—		—	—
1AF	Brake2	Brake switch	Brake pedal depressed		B+	• Brake switch • Related wiring harnesses
			Brake pedal released		Below 1.0	
1AG	—	—	—		—	—
1AH	—	—	—		—	—
1AI	CAN (L)	Instrument cluster, ABS/TCS HU/CM, TCM	Because this terminal is for CAN, good/no good judgment by terminal voltage is not possible.			• Related wiring harnesses
1AJ	Constant voltage (Vref)	APP sensor	Ignition switch ON		Approx. 5.0	• Related wiring harnesses

Terminal	Signal	Connected to	Test condition		Voltage (V)	Inspection item
1AK	MAF	MAF sensor	Ignition switch ON		Approx. 0.7	• MAF sensor • Related wiring harnesses
			Idle (after warm up)	MTX	1.15—1.28	
				ATX	1.18—1.31	
1AL	Constant voltage (Vref)	APP sensor	Ignition switch ON		Approx. 5.0	• Related wiring harnesses
1AM	CAN (H)	Instrument cluster, ABS HU/CM, TCM	Because this terminal is for CAN, good/no good judgment by terminal voltage is not possible.			• Related wiring harness
1AN	—	—	—		—	—
1AO	APP sensor 1	APP sensor	IG SW ON	APP released	1.55—1.62	• APP sensor • Related wiring harness
				APP depressed	3.49—4.09	
1AP	APP sensor 2	APP sensor	IG SW ON	APP released	1.01—1.07	• APP sensor • Related wiring harness
				APP depressed	2.94—3.54	
1AQ	Cruise control switch*2	Cruise control switch	IG SW ON	Depressing ON/OFF	Approx. 0	• Cruise control switch • Related wiring harnesses
				Depressing CANCEL	Approx. 1.2	
				Depressing SET/COAST	Approx. 3.2	
				Depressing Res/ACCEL	Approx. 4.2	
				Others	Approx. 5.0	
1AR	IAT sensor GND	MAF/IAT sensor	Under any condition		Below 1.0	• Related wiring harnesses
1AS	APP sensor GND	APP sensor	Under any condition		Below 1.0	• Related wiring harnesses
1AT	IAT	MAF/IAT sensor	IG SW ON	IAT 0 °C {32 °F}	Approx. 3.43	• MAF/IAT sensor • Related wiring harness
				IAT 20 °C {68 °F}	Approx. 2.38	
				IAT 40 °C {104 °F}	Approx. 1.49	
				IAT 60 °C {140 °F}	Approx. 0.89	
				IAT 80 °C {176 °F}	Approx. 0.53	
				IAT 100 °C {212 °F}	Approx. 0.33	
1AU	A/C	A/C relay	Idle	A/C operating	Below 1.0	• A/C relay • Related wiring harness
				A/C not operating	B+	
1AV	APP sensor GND	APP sensor	Under any condition		Below 1.0	• Related wiring harnesses
1AW	Back-up power supply*3	Main relay	Under any condition		B+	• Main relay • Related wiring harness
1AX	Throttle actuator control power supply	Drive-by-wire relay	Ignition switch OFF (after 90 s)		Below 1.0	• Drive-by-wire relay • Related wiring harnesses
			Ignition switch ON		B+	
1AY	Ignition switch (IG1)	Ignition switch	Ignition switch OFF		Below 1.0	• Ignition switch • Related wiring harnesses
			Ignition switch ON		B+	

Terminal	Signal	Connected to	Test condition	Voltage (V)	Inspection item
1AZ	GND	Ground	Under any condition	Below 1.0	• Related wiring harnesses
1BA	Back-up power supply	Battery (positive terminal)	Under any condition	B+	• Battery • Related wiring harness
1BB	GND	Ground	Under any condition	Below 1.0	• Related wiring harnesses
1BC	Sensor GND	HO2S (rear)	Under any condition	Below 1.0	• Related wiring harnesses
1BD	GND	Ground	Under any condition	Below 1.0	• Related wiring harnesses
1BE	Main relay control	Main relay	Ignition switch OFF	B+	• Main relay • Related wiring harnesses
			Ignition switch ON	Below 1.0	
1BF	Throttle actuator control power supply	Drive-by-wire relay	Ignition switch OFF (after 90 s)	Below 1.0	• Drive-by-wire relay • Related wiring harnesses
			Ignition switch ON	B+	
1BG	Sensor GND*3	HO2S (middle)	Under any condition	Below 1.0	• Related wiring harnesses
1BH	GND	Ground	Under any condition	Below 1.0	• Related wiring harnesses
2A	Throttle actuator control (+)	Throttle body	Ignition switch ON	B+	• Throttle actuator • Related wiring harnesses
2B	Throttle actuator control (–)	Throttle body	Idle (after warm up)	3.5—5.5	• Throttle actuator • Related wiring harnesses
2C	Purge control	Purge solenoid valve	• Inspect using the wave profile. (See 01–40A–21 Inspection Using An Oscilloscope (Reference).)		• Purge solenoid valve • Related wiring harnesses
2D	—	—	—	—	—
2E	OCV control	OCV	• Inspect using the wave profile. (See 01–40A–21 Inspection Using An Oscilloscope (Reference).)		• OCV valve • Related wiring harnesses
2F	—	—	—	—	—
2G	EGR valve #2 coil control	EGR valve (terminal A)	Ignition switch ON	B+	• EGR valve • Related wiring harnesses
			Idle	B+	
2H	EGR valve #4 coil control	EGR valve (terminal F)	Ignition switch ON	Below 1.0	• EGR valve • Related wiring harnesses
			Idle	Below 1.0	
2I	Variable tumble control	Variable tumble solenoid valve	ECT more than 60 °C {140 °F} while idling.	B+	• Variable tumble solenoid valve • Related wiring harnesses
			ECT less than 60 °C {140 °F} and engine speed less than 3,750 rpm	Below 1.0	
2J	Variable intake air control	Variable intake air solenoid valve	Engine speed: more than 4,500 rpm	B+	• Variable intake air solenoid valve • Related wiring harnesses
			Engine speed: less than 4,500 rpm	Below 1.0	
2K	EGR valve #1 coil control	EGR valve (terminal E)	Ignition switch ON	Below 1.0	• EGR valve • Related wiring harnesses
			Idle	Below 1.0	
2L	EGR valve #3 coil control	EGR valve (terminal B)	Ignition switch ON	B+	• EGR valve • Related wiring harnesses
			Idle	B+	
2M	VSS (–)*4	VSS	• Inspect using the wave profile. (See 01–40A–21 Inspection Using An Oscilloscope (Reference).)		• VSS sensor • Related wiring harnesses

Terminal	Signal	Connected to	Test condition		Voltage (V)	Inspection item
2N	VSS (+)*4	VSS	• Inspect using the wave profile. (See 01–40A–21 Inspection Using An Oscilloscope (Reference).)			• VSS sensor • Related wiring harnesses
2O	—	—	—		—	—
2P	—	—	—		—	—
2Q	HO2S (rear)	HO2S (rear)	Ignition switch ON		Approx. 0	• HO2S (rear) • Related wiring harnesses
			Idle (after warm up)		0⇔1.0	
2R	HO2S (middle)*3	HO2S (middle)	Ignition switch ON		Approx. 0	• HO2S (middle) • Related wiring harnesses
			Idle (after warm up)		0⇔1.0	
2S	CMP signal	CMP sensor	• Inspect using the wave profile. (See 01–40A–21 Inspection Using An Oscilloscope (Reference).)			• CMP sensor • Related wiring harnesses
2T	PSP	PSP switch	Idle	Steering wheel at straight ahead position	B+	• PSP switch • Power steering system • Related wiring harnesses
				While turning steering wheel	Below 1.0	
2U	Knocking (+)	Knock sensor	Ignition switch ON (Use digital type voltmeter, because measurement voltage will be detected less than true voltage when using analog type voltmeter)		Approx. 4.3	• Perform "On-Board Diagnostic Test" • Related wiring harnesses
2V	Knocking (–)	Knock sensor	Ignition switch ON (Use digital type voltmeter, because measurement voltage will be detected less than true voltage when using analog type voltmeter)		Below 1.0	• Perform "On-Board Diagnostic Test" • Related wiring harnesses
2W	CKP signal	CKP sensor	• Inspect using the wave profile. (See 01–40A–21 Inspection Using An Oscilloscope (Reference).)			• CKP sensor • Related wiring harnesses
2X	HO2S (front) shield	HO2S (front)	Under any condition		Below 1.0	• Related wiring harnesses
2Y	—	—	—		—	—
2Z	HO2S (front) sensor GND*3	HO2S (front)	Under any condition		Below 1.0	• Related wiring harnesses
	HO2S (front)*5	HO2S (front)	Ignition switch ON		Approx. 6.19	• HO2S (front) • Related wiring harnesses
			Ignition switch OFF (after 90 s)		Below 1.0	
			Idle (after warm up)		Approx. 4.1	
2AA	—	—	—		—	—
2AB	—	—	—		—	—
2AC	HO2S (front)*5	HO2S (front)	Idle (after warm up): Approx. 0 mA		—	• HO2S (front) • Related wiring harnesses
2AD	HO2S (front)*3	HO2S (front)	• Inspect using the wave profile. (See 01–40A–21 Inspection Using An Oscilloscope (Reference).)			• HO2S (front) • Related wiring harness
	HO2S (front)*5	HO2S (front)	• Verify that the voltage increases when the engine speed increases.			• HO2S (front) • Related wiring harnesses
2AE	Variable tumble shutter valve monitor	Variable tumble shutter valve switch	ECT less than 62 °C {144 °F} while engine speed less than 3,750 rpm		Approx. 5.0	• Variable tumble shutter valve switch • Related wiring harness
			ECT more than 62 °C {144 °F} or engine speed 3,750 rpm or more		Below 1.0	
2AF	—	—	—		—	—

Terminal	Signal	Connected to	Test condition		Voltage (V)	Inspection item
2AG	Manifold absolute pressure	MAP sensor	Ignition switch ON (Engine OFF) at sea level		Approx. 4.1	• MAP sensor • Related wiring harnesses
2AH	ECT	ECT sensor	IG SW ON	IAT 20 °C {68 °F}	3.04—3.14	• ECT sensor • Related wiring harness
				IAT 40 °C {104 °F}	2.09—2.21	
				IAT 60 °C {140 °F}	1.29—1.39	
				IAT 80 °C {176 °F}	0.76—0.83	
				IAT 100 °C {212 °F}	0.45—0.49	
2AI	Generator field coil control	Generator (terminal D)	• Inspect using the wave profile. (See 01–40A–21 Inspection Using An Oscilloscope (Reference).)			• Following PIDs: IAT, ECT, RPM, VPWR, ALTT V • Generator • Related wiring harness
2AJ	Generator output voltage	Generator (terminal P)	• Inspect using the wave profile. (See 01–40A–21 Inspection Using An Oscilloscope (Reference).)			• Generator • Related wiring harness
2AK	TP (No. 1)	TP sensor No. 1	Ignition switch ON	APP released	0.4—0.6	• TP sensor • Related wiring harness
				APP depressed	4.4—4.7	
2AL	TP (No. 2)	TP sensor No. 2	Ignition switch ON	APP released	4.4—4.6	• TP sensor • Related wiring harness
				APP depressed	0.3—0.6	
2AM	CMP power	CMP sensor	Ignition switch ON		B+	• CMP sensor • Related wiring harnesses
			Ignition switch OFF (after 90 s)		Below 1.0	
2AN	—	—	—		—	—
2AO	Constant voltage (Vref)	TP sensor	Under any condition		Approx. 5.0	• TP sensor • Related wiring harness
2AP	TP sensor GND	TP sensor	Ignition switch ON		Below 1.0	• TP sensor • Related wiring harness
2AQ	CKP power	CKP sensor	Ignition switch ON		B+	• CKP sensor • Related wiring harness
			Ignition switch OFF		Below 1.0	
2AR	—	—	—		—	—
2AS	—	—	—		—	—
2AT	IGT4	Ignition coil (No.4 cylinder)	• Inspect using the wave profile. (See 01–40A–21 Inspection Using An Oscilloscope (Reference).)			• Ignition coil • Related wiring harness
2AU	Constant voltage (Vref)	MAP sensor	Ignition switch ON		Approx. 5.0	• Related wiring harnesses
2AV	—	—	—		—	—
2AW	IGT2	Ignition coil (No.2 cylinder)	• Inspect using the wave profile. (See 01–40A–21 Inspection Using An Oscilloscope (Reference).)			• Ignition coil • Related wiring harness
2AX	IGT3	Ignition coil (No.3 cylinder)	• Inspect using the wave profile. (See 01–40A–21 Inspection Using An Oscilloscope (Reference).)			• Ignition coil • Related wiring harness
2AY	Sensor GND	ECT sensor, MAP sensor, variable tumble shutter valve switch	Under any condition		Below 1.0	• Related wiring harnesses
2AZ	Fuel injection (#4)	Fuel injector No.4	• Inspect using the wave profile. (See 01–40A–21 Inspection Using An Oscilloscope (Reference).)			• Fuel injector No.4 • Related wiring harnesses

Terminal	Signal	Connected to	Test condition	Voltage (V)	Inspection item
2BA	IGT1	Ignition coil (No.1 cylinder)	• Inspect using the wave profile. (See 01–40A–21 Inspection Using An Oscilloscope (Reference).)		• Ignition coil • Related wiring harness
2BB	Fuel injection (#1)	Fuel injector No.1	• Inspect using the wave profile. (See 01–40A–21 Inspection Using An Oscilloscope (Reference).)		• Fuel injector No.1 • Related wiring harnesses
2BC	Fuel injection (#2)	Fuel injector No.2	• Inspect using the wave profile. (See 01–40A–21 Inspection Using An Oscilloscope (Reference).)		• Fuel injector No.2 • Related wiring harnesses
2BD	Fuel injection (#3)	Fuel injector No.3	• Inspect using the wave profile. (See 01–40A–21 Inspection Using An Oscilloscope (Reference).)		• Fuel injector No.3 • Related wiring harnesses
2BE	HO2S (rear) heater control	HO2S (rear) heater	• Inspect using the wave profile. (See 01–40A–21 Inspection Using An Oscilloscope (Reference).)		• HO2S (rear) heater • Related wiring harnesses
2BF	HO2S (middle) heater control	HO2S (middle) heater	Engine speed: less than 4,000 rpm	B+	• HO2S (middle) heater • Related wiring harnesses
			Engine speed: more than 4,000 rpm	Below 1.0	
2BG	HO2S (front) heater control	HO2S (front) heater	• Inspect using the wave profile. (See 01–40A–21 Inspection Using An Oscilloscope (Reference).)		• HO2S (front) heater • Related wiring harnesses
2BH	—	—	—	—	—

*1 : MTX
*2 : Cruise control switch equipped
*3 : California emission regulation applicable ATX model
*4 : MTX, without ABS/DSC
*5 : Except for California emission regulation applicable ATX model

...spection Using An Oscilloscope (Reference)
VSS signal
PCM terminals
- 1O, 2M, 2N(+)—body ground(–)

Oscilloscope setting
- 1 V/DIV (Y), 10 ms/DIV (X), DC range

Vehicle condition
- Drive the vehicle with approx. 10 km/h {6.2 mph}

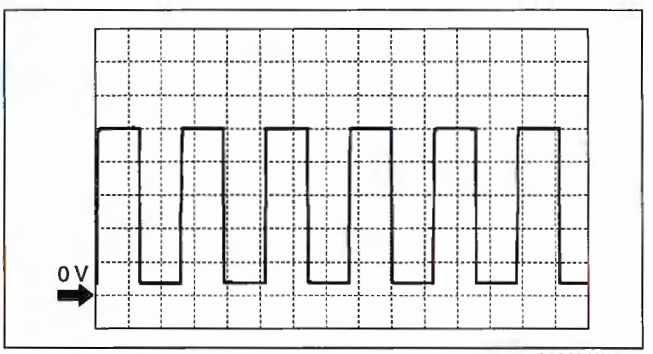

A6A3940W011

Purge control signal
PCM terminals
- 2C(+)—body ground(–)

Oscilloscope setting
- 2 V/DIV (Y), 10 ms/DIV (X), DC range

Vehicle condition
- Idle after warm up (no load, P/S off, A/C off)

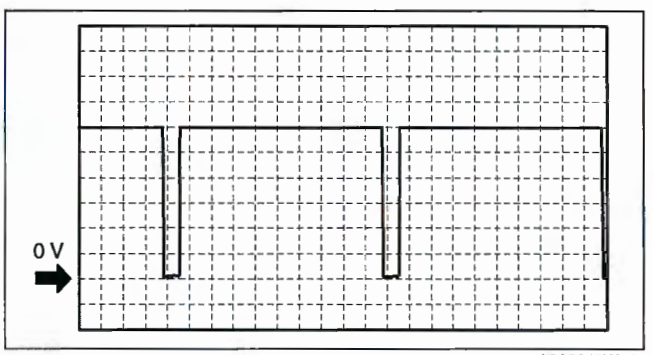

A6A3940W023

OCV control signal
PCM terminals
- 2E(+)—body ground(–)

Oscilloscope setting
- 2 V/DIV (Y), 0.8 ms/DIV (X), DC range

Vehicle condition
- Idle after warm up (no load, P/S off, A/C off)

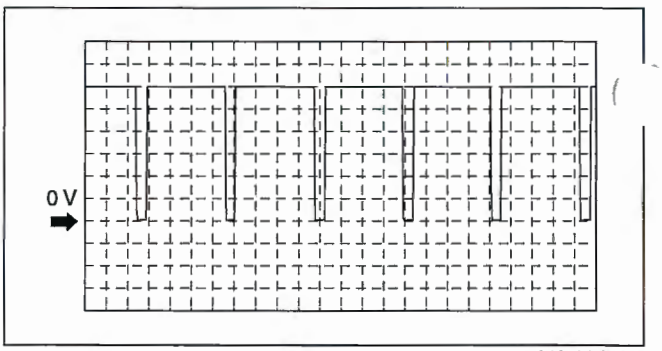

A6A3940W022

CMP sensor signal
PCM terminals
- 2S(+)—body ground(–)

Oscilloscope setting
- 1 V/DIV (Y), 25 ms/DIV (X), DC range

Vehicle condition
- Idle after warm up (no load, P/S off, A/C off)

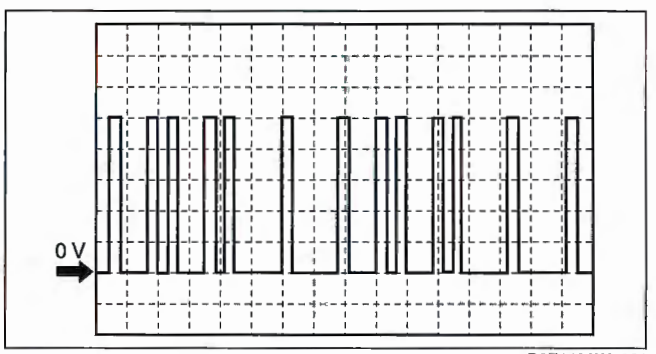

D6E140AW3021

CKP sensor signal
PCM terminals
- 2W(+)—body ground(–)

Oscilloscope setting
- 1 V/DIV (Y), 2.5 ms/DIV (X), DC range

Vehicle condition
- Idle after warm up (no load, P/S off, A/C off)

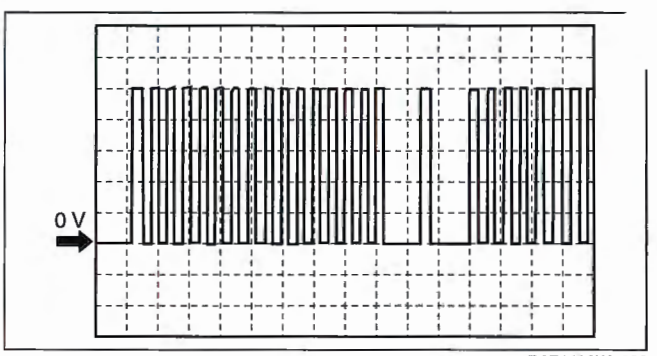

D6E140AW3022

HO2S (front) signal (California emission regulation applicable ATX model)
PCM terminals
- 2AD(+)—body ground(–)

Oscilloscope setting
- 0.1 V/DIV (Y), 400 ms/DIV (X), DC range

Vehicle condition
- Idle after warm up (no load, P/S off, A/C off)

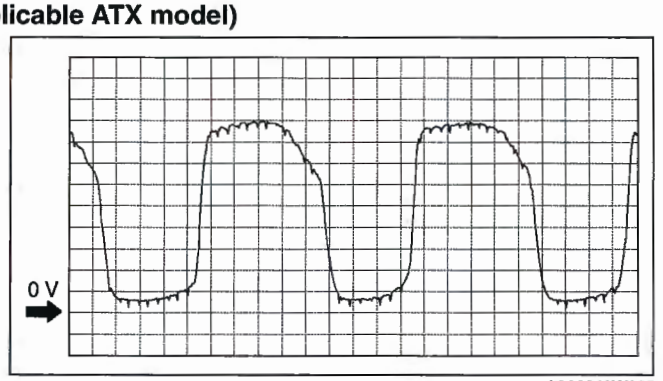

A6A3940W005

Generator field coil control signal
PCM terminals
- 2AI(+)—body ground(–)

Oscilloscope setting
0.5 V/DIV (Y), 1 ms/DIV (X), DC range
Vehicle condition
- Idle after warm up (no load, P/S off, A/C off)

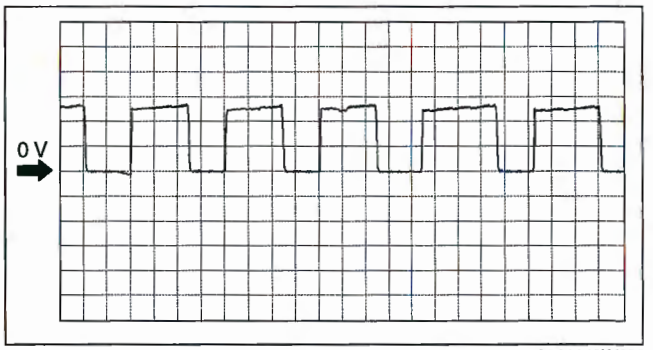

A6A3940W006

Generator output voltage signal
PCM terminals
- 2AJ(+)—body ground(–)

Oscilloscope setting
- 2 V/DIV (Y), 2 ms/DIV (X), DC range

Vehicle condition
- Idle after warm up (no load, P/S off, A/C off)

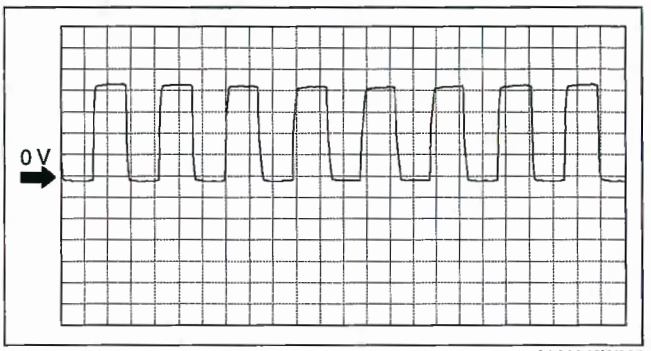

A6A3940W004

IGT1, IGT2, IGT3, IGT4 control signals
PCM terminals
IGT1 (ignition coil No.1): 2BA(+)—body ground(–)
- IGT2 (ignition coil No.2): 2AW(+)—body ground(–)
- IGT3 (ignition coil No.3): 2AX(+)—body ground(–)
- IGT4 (ignition coil No.4): 2AT(+)—body ground(–)

Oscilloscope setting
- 4 V/DIV (Y), 0.01 ms/DIV (X), DC range

Vehicle condition
- Idle after warm up (no load, P/S off, A/C off)

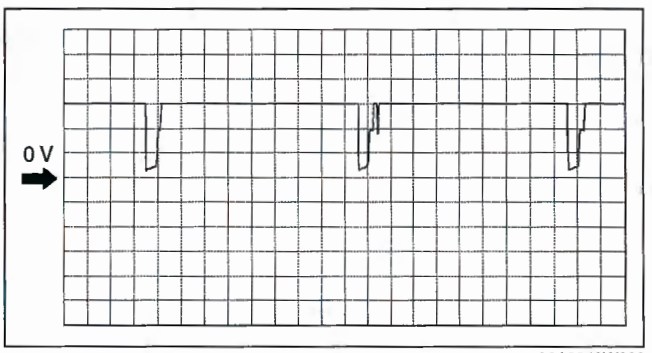

A6A3940W003

Fuel injection control

PCM terminals
- Fuel Injection No.1: 2BB(+)—body ground(–)
- Fuel Injection No.2: 2BC(+)—body ground(–)
- Fuel Injection No.3: 2BD(+)—body ground(–)
- Fuel Injection No.4: 2AZ(+)—body ground(–)

Oscilloscope setting
- 4 V/DIV (Y), 10 ms/DIV (X), DC range

Vehicle condition
- Idle after warm up (no load, P/S off, A/C off)

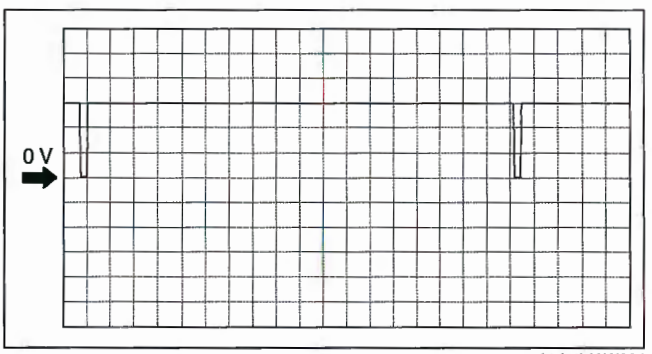

A6A3940W024

HO2S (rear) heater control
PCM terminals
- 2BE(+)—body ground(–)

Oscilloscope setting
- 2 V/DIV (Y), 1 s/DIV (X), DC range

Vehicle condition
- Idle (immediately after starting the engine)

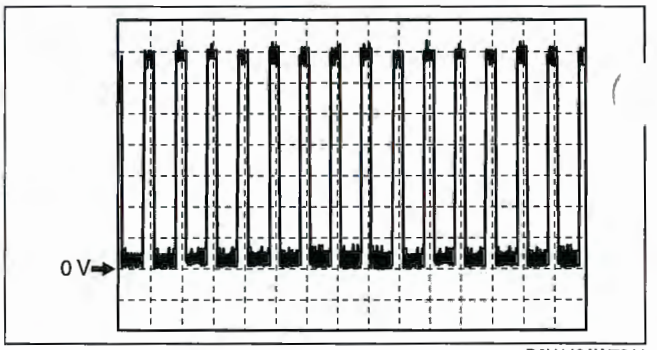

D6U140AW7311

HO2S (front) heater control
PCM terminals
- 2BG(+)—body ground(–)

Oscilloscope setting
- 2 V/DIV (Y), 500 ms/DIV (X), DC range

Vehicle condition
- Idle (immediately after starting the engine)

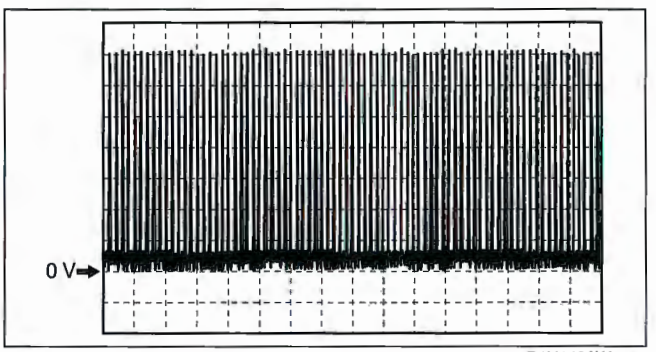

D6U140AW7312

PCM REPLACEMENT [L3]

1. Connect the WDS or equivalent to the DLC-2.
2. Set up the WDS or equivalent (including the vehicle recognition).
3. Select "Module Programming".
4. Select "Programmable Module Installation".
5. Select "PCM" and perform procedures according to directions on the WDS or equivalent screen.

Note
- If the PCM is replaced with a new one, the PCM stores DTC P0602 and illuminates the MIL even though no malfunction is detected. When the configuration is completed, DTC P0602 is cleared.

E6U014018880W

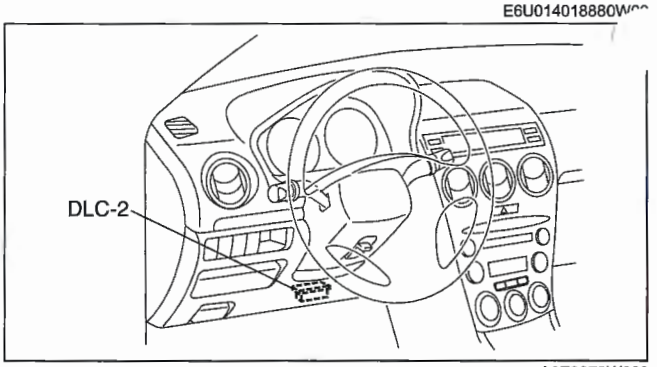

A6E3970W002

6. Retrieve DTC's by the WDS or equivalent, then verify that there in no DTC present.
   - If DTC is present, perform applicable DTC inspection. (See 01–02A–18 DTC TABLE [L3].)

CLUTCH PEDAL POSITION (CPP) SWITCH INSPECTION [L3]

E6U014018660W03

Note
- Perform the following inspection only when directed.

Continuity Inspection

1. Verify that the clutch switch is installed properly.
2. Disconnect the negative battery cable.
3. Remove the clutch switch.
4. Inspect for continuity between the clutch switch terminals using an ohmmeter.
   - If the clutch switch is normal, but PID value is out of specification, perform the "Circuit Open/ Short Inspection".
   - If not as specified, replace the clutch switch.

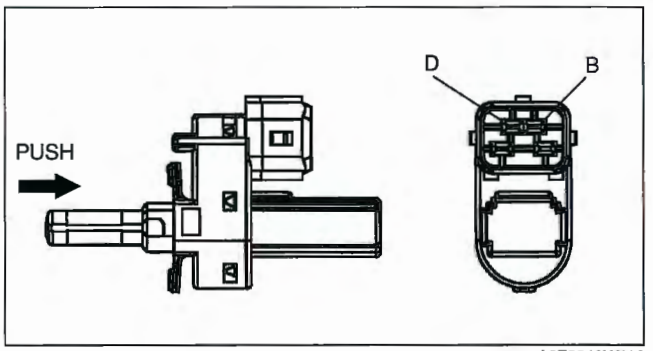

A6E3940W020

Specification

○—○ :Continuity

Rod condition	Terminal	
	B	D
Released	○	○
Pushed		

A6E3940W022

Circuit Open/Short Inspection

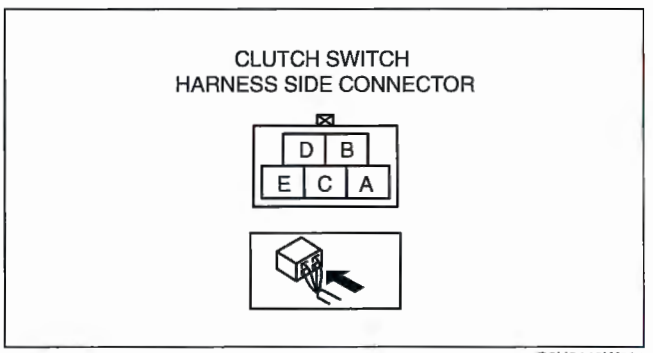

B6U0140W031

1. Disconnect the PCM connector. (See 01–40A–9 PCM REMOVAL/INSTALLATION [L3].)
2. Inspect the following harnesses for open or short circuit. (Continuity inspection)

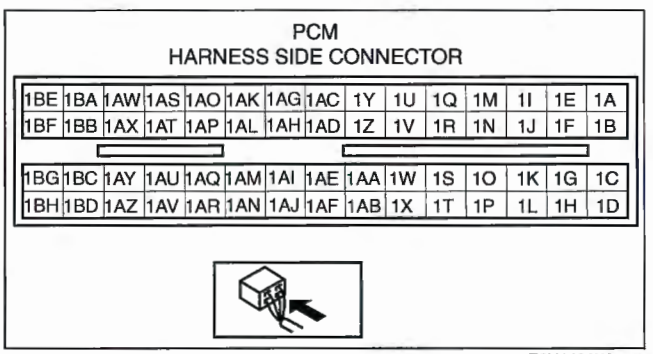

E6U140AW5991

Open circuit

- If there is no continuity, there is an open circuit. Repair or replace the harness.
  - — Clutch switch terminal B and PCM terminal 1D
  - — Clutch switch terminal D and body GND

Short circuit

- If there is continuity, there is a short circuit. Repair or replace the harness.
  - — Clutch switch terminal B and body GND

NEUTRAL SWITCH INSPECTION [L3]

E6U014017640W03

Note
- Perform the following inspection only when directed.

Continuity Inspection

1. Disconnect the negative battery cable.
2. Remove the neutral switch. (See 05–15A–4 MANUAL TRANSAXLE REMOVAL/INSTALLATION [G35M-R].)
3. Inspect for continuity between the neutral switch terminals using an ohmmeter.
   - If the neutral switch is normal, but PID value is out of specification, perform the "Circuit Open/Short Inspection".
   - If not as specified, replace the neutral switch.

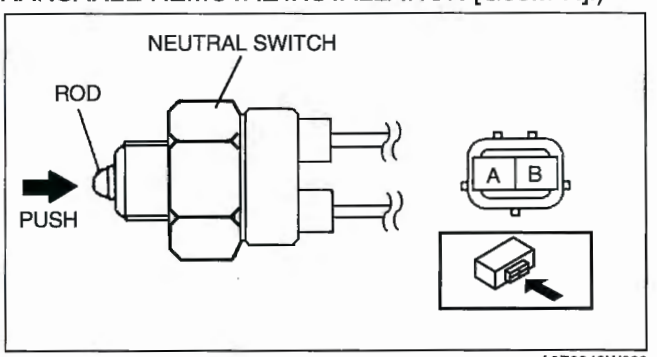

A6E3940W023

Specification

O—O : Continuity

Condition	Terminal	
	A	B
Rod pushed	O	O
Except above		

A6E3940W025

Circuit Open/Short Inspection

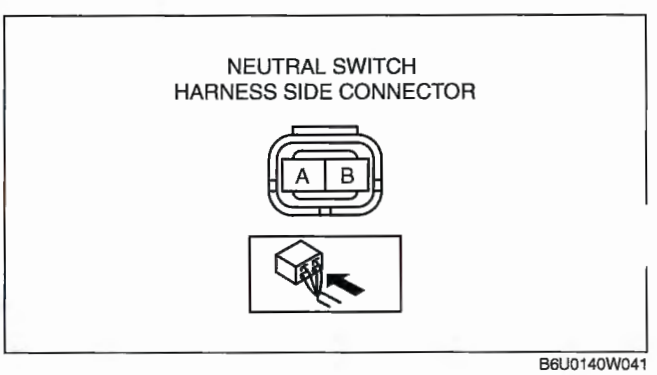

B6U0140W041

1. Disconnect the PCM connector. (See 01–40A–9 PCM REMOVAL/INSTALLATION [L3].)
2. Inspect the following harnesses for open or short circuit. (Continuity inspection)

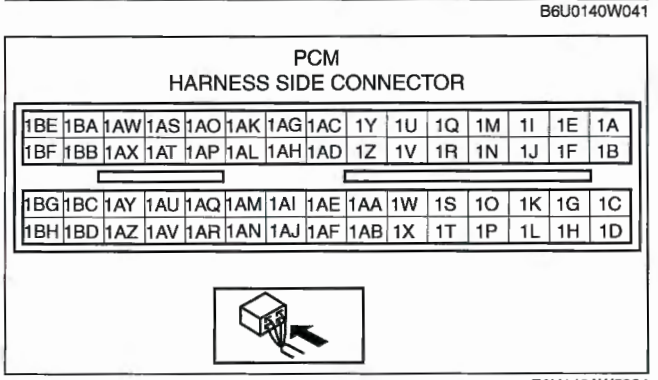

E6U140AW5991

Open circuit

- If there is no continuity, there is an open circuit. Repair or replace the harness.
  - — Neutral switch terminal B and PCM terminal 1X
  - — Neutral switch terminal A and body GND

Short circuit

- If there is no continuity, there is a short circuit. Repair or replace the harness.
  - — Neutral switch terminal B and body GND

POWER STEERING PRESSURE (PSP) SWITCH INSPECTION [L3]

E6U014032230W03

Note
- Perform the following inspection only when directed.

Continuity Inspection

1. Inspect the following if the power steering is inoperative (See 06–12–4 POWER STEERING FLUID INSPECTION.):
   - Power steering fluid level
   - Power steering fluid leakage
   - Power steering fluid pressure
2. Disconnect the PSP switch connector.
3. Start the engine.
4. Inspect for continuity between the PSP switch terminal and GND using an ohmmeter.
   - If not as specified, replace the PSP switch.
   - If the PSP switch is normal, but PID value is out of specification, perform the "Circuit Open/Short Inspection".

Specification

O—O :Continuity

Condition	Terminal	GND
Steering wheel in straight ahead position		
While turning steering wheel	O	O

A6E3940W019

Circuit Open/Short Inspection

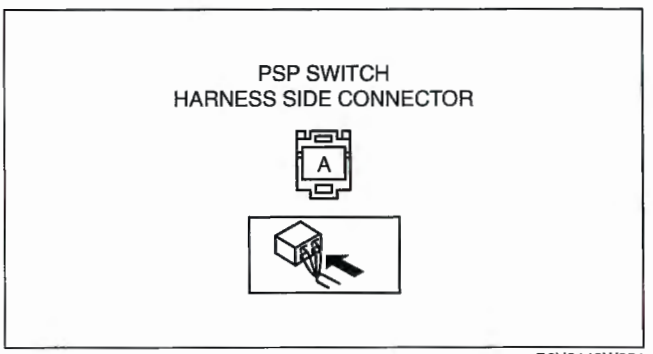

B6U0140W051

1. Disconnect the PCM connector. (See 01–40A–9 PCM REMOVAL/INSTALLATION [L3].)
2. Inspect the following harnesses for open or short circuit. (Continuity inspection)

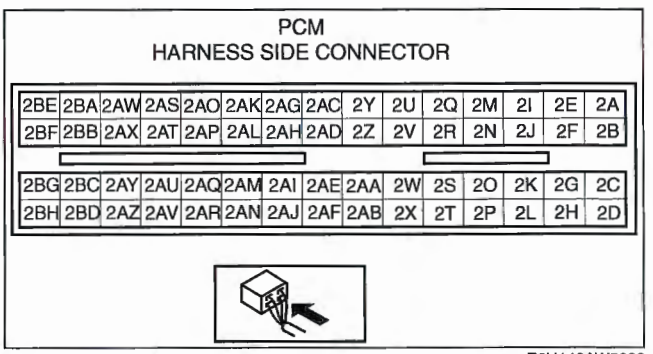

E6U140AW5992

Open circuit
- If there is no continuity, there is an open circuit. Repair or replace the harness.
  — PSP switch terminal and PCM terminal 2T

Short circuit
- If there is no continuity, there is a short circuit. Repair or replace the harness.
  — PSP switch terminal and body GND

VARIABLE TUMBLE SHUTTER VALVE SWITCH INSPECTION [L3]

E6U014018995W01

Note
- Perform the following inspection only when directed.

Voltage Inspection

1. Turn the ignition switch to ON position (Engine OFF).
2. Verify that the PCM terminal 2AE voltage is as shown in the following table when the Variable tumble shutter valve actuator rod is depressed and released by hand.

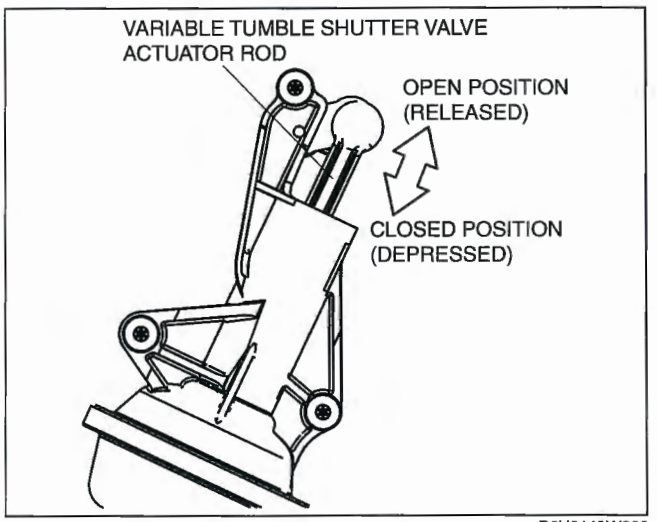

B6U0140W063

- If not as specified, perform the "Circuit Open/ Short Inspection".
  - — If there is no open or short circuit, replace the intake manifold.

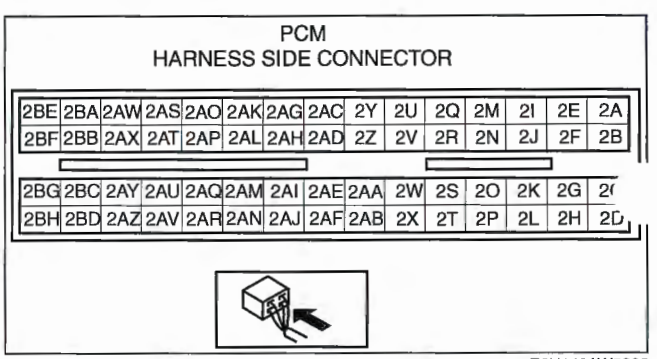

E6U140AW5992

Variable tumble shutter valve switch output voltage

Condition	PCM terminal 2AE
Released (Open position)	Approx. 5.0 V
Depressed (Closed position)	Less than 0.4 V

Circuit Open/Short Inspection

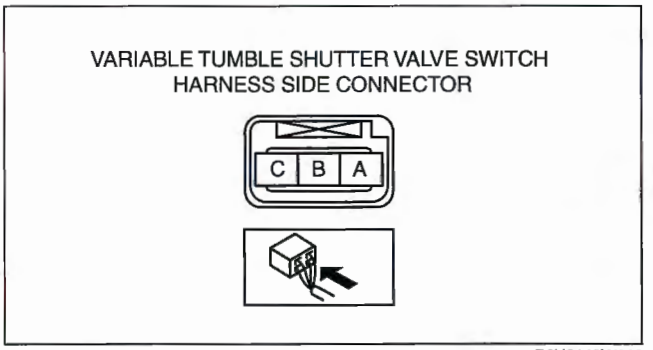

B6U0140W062

1. Disconnect the PCM connector. (See 01–40A–9 PCM REMOVAL/INSTALLATION [L3].)
2. Inspect the following harnesses for open or short circuit. (Continuity inspection)

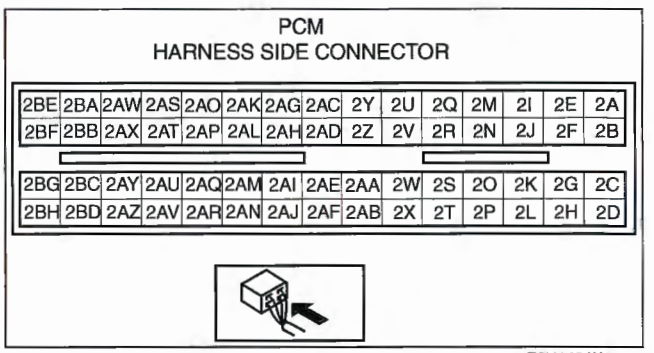

E6U140AW5992

Open circuit

- If there is no continuity, there is an open circuit. Repair or replace the harness.
  - — Variable tumble shutter valve switch terminal A and PCM terminal 2AU
  - — Variable tumble shutter valve switch terminal B and PCM terminal 2AY
  - — Variable tumble shutter valve switch terminal C and PCM terminal 2AE

Short circuit

- If there is continuity, there is a short circuit. Repair or replace the harness.
  - — Variable tumble shutter valve switch terminal A and power supply
  - — Variable tumble shutter valve switch terminal A and body GND
  - — Variable tumble shutter valve switch terminal B and power supply
  - — Variable tumble shutter valve switch terminal C and power supply
  - — Variable tumble shutter valve switch terminal C and body GND

ACCELERATOR PEDAL POSITION (APP) SENSOR INSPECTION [L3]

E6U014041609W03

Note

- Perform the following inspection only when directed.

Voltage Inspection

1. Turn the ignition key to ON position (Engine OFF).
2. Verify that the PCM terminal 1AO and 1AP change smoothly while throttle valve is gradually opened.
   - If as verified, go to next step.
   - If not as verified, perform the "Circuit Open/Short Inspection".
     - — If there is no open or short circuit, replace the throttle body.
3. Verify that the PCM terminal 1AO and 1AP voltages are as shown in the following table.

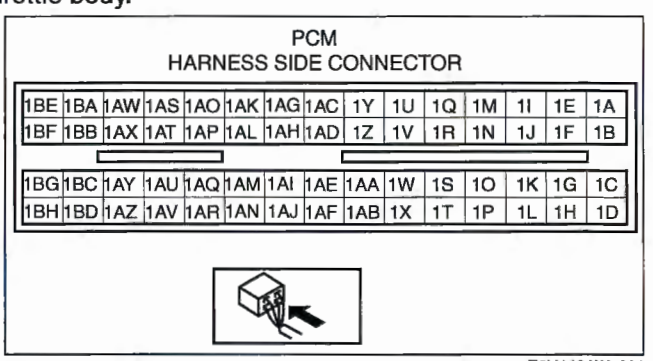

E6U140AW5991

APP sensor output voltage

Condition	PCM terminal 1AO (APP sensor No.1)	PCM terminal 1AP (APP sensor No.2)
Accelerator pedal released	1.55—1.62 V	1.01—1.07 V
Accelerator pedal depressed	3.49—4.09 V	2.94—3.54 V

- If voltage is not as following table, perform the "Circuit Open/Short Inspection".
  - — If there is no open or short circuit, replace accelerator pedal. (See 01–13A–10 ACCELERATOR PEDAL REMOVAL/INSTALLATION [L3].)

Circuit Open/Short Inspection

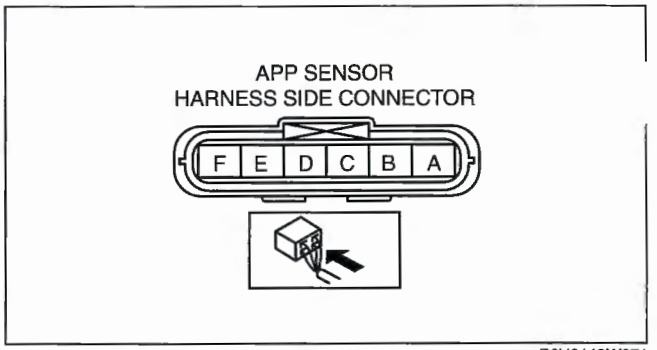

B6U0140W071

1. Disconnect the PCM connector. (See 01–40A–9 PCM REMOVAL/INSTALLATION [L3].)
2. Inspect the following wiring harnesses for open or short circuit. (Continuity inspection)

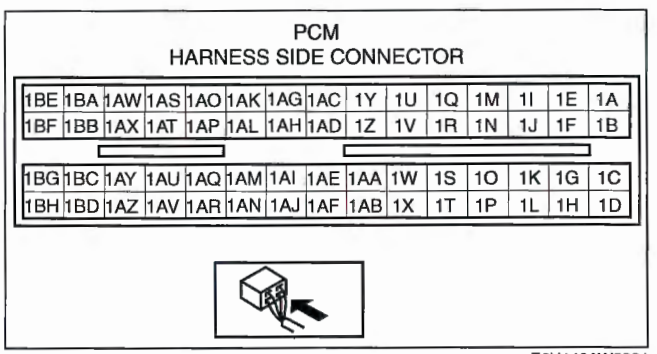

E6U140AW5991

Open circuit

- If there is no continuity, there is an open circuit. Repair or replace the wiring harness.
  - — APP sensor terminal A and PCM terminal 1AJ
  - — APP sensor terminal B and PCM terminal 1AV
  - — APP sensor terminal C and PCM terminal 1AP
  - — APP sensor terminal D and PCM terminal 1AL
  - — APP sensor terminal E and PCM terminal 1AS
  - — APP sensor terminal F and PCM terminal 1AO

Short circuit

- If there is continuity, there is a short circuit. Repair or replace the wiring harness.
  - — APP sensor terminal A and power supply
  - — APP sensor terminal A and body GND
  - — APP sensor terminal B and power supply
  - — APP sensor terminal C and power supply
  - — APP sensor terminal C and body GND
  - — APP sensor terminal D and power supply
  - — APP sensor terminal D and body GND
  - — APP sensor terminal E and power supply
  - — APP sensor terminal F and power supply
  - — APP sensor terminal F and body GND

THROTTLE POSITION (TP) SENSOR INSPECTION [L3]

E6U014018910W03

Note

- Perform the following inspection only when directed.

Voltage Inspection

1. Verify that no DTC related to APP sensor has been detected.
   - If any DTCs related to APP sensor have been detected, perform the DTC inspection. (See 01–02A–18 DTC TABLE [L3].)
2. Start the engine and warm it up (ECT: **more than 80°C {176 °F}**.
3. Turn the ignition switch to ON position (Engine OFF).
4. Verify that the PCM terminal 2AK and 2AL change smoothly while throttle valve is gradually opened.
   - If as verified, go to next step.
   - If not as verified, perform the "Circuit Open/Short Inspection".
     - — If there is no open or short circuit, replace the throttle body.

5. Verify that the PCM terminal 2AK and 2AL voltages are as shown in the following table.
   - If voltage is not as following table, perform the "Circuit Open/Short Inspection".
     — If there is no open or short circuit, replace the throttle body.

TP sensor output voltage

Condition	PCM terminal 2AK (TP sensor No.1)	PCM terminal 2AL (TP sensor No.2)
APP close	0.4—0.6 V	4.4—4.6 V
APP open	4.4—4.7 V	0.3—0.6 V

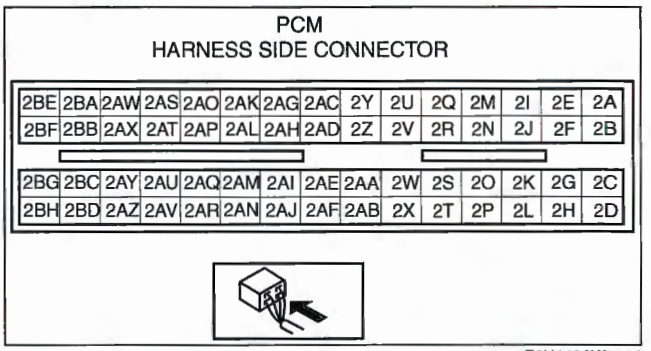

E6U140AW5992

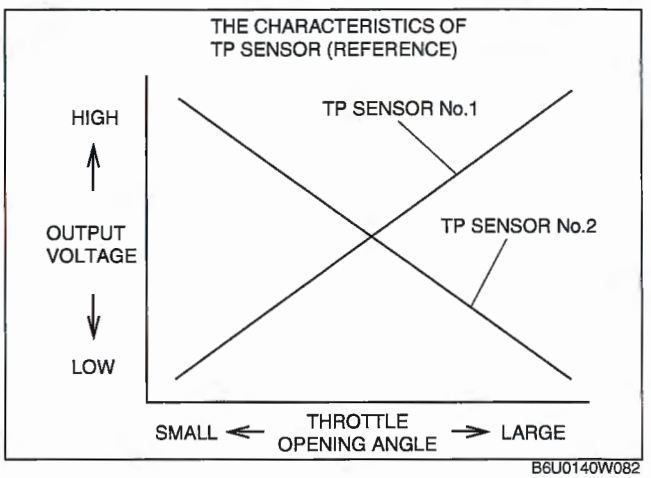

B6U0140W082

Circuit Open/Short Inspection

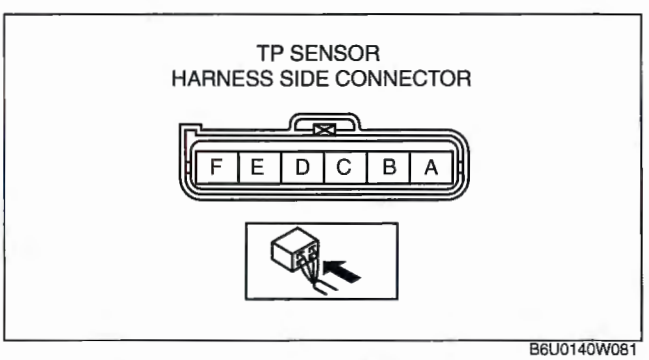

B6U0140W081

1. Disconnect the PCM connector. (See 01–40A–9 PCM REMOVAL/INSTALLATION [L3].)
2. Inspect the following wiring harnesses for open or short circuit. (Continuity inspection)

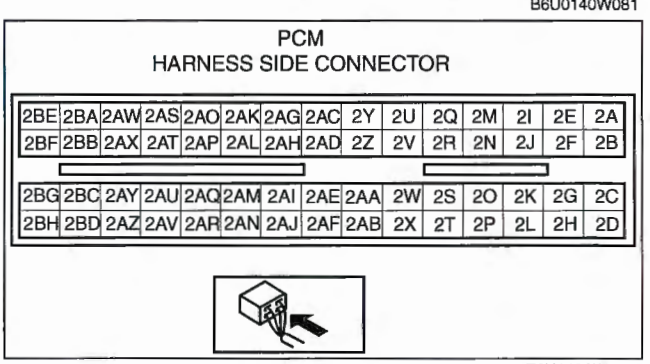

E6U140AW5992

Open circuit
- If there is no continuity, there is an open circuit. Repair or replace the wiring harness.
  — Throttle body terminal A and PCM terminal 2AK
  — Throttle body terminal B and PCM terminal 2AO
  — Throttle body terminal C and PCM terminal 2AL
  — Throttle body terminal D and PCM terminal 2AP

Short circuit
- If there is continuity, there is a short circuit. Repair or replace the wiring harness.
  — Throttle body terminal A and power supply
  — Throttle body terminal A and body GND
  — Throttle body terminal B and power supply
  — Throttle body terminal B and body GND
  — Throttle body terminal C and power supply
  — Throttle body terminal C and body GND
  — Throttle body terminal D and power supply

MASS AIR FLOW (MAF) SENSOR INSPECTION [L3]

E6U014013215W01

Visual Inspection

Note
- Perform the following inspection only when directed.

1. Visually inspect for the following on the MAF sensor.
   - Damage
   - Cracks
   - Bent terminals
   - Terminal rust
     - — If any of the above are found, replace the MAF sensor.
     - — If the MAF PID value is out of specification, carry out the "Circuit Open/Short Inspection".

Circuit Open/Short Inspection

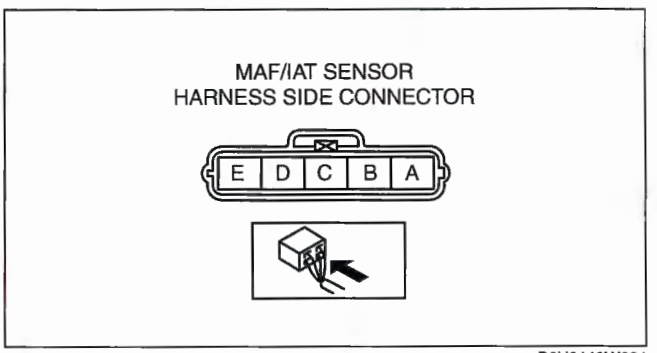

B6U0140W091

1. Disconnect the PCM connector. (See 01–40A–9 PCM REMOVAL/INSTALLATION [L3].)
2. Disconnect the MAF sensor connector.
3. Inspect the following wiring harnesses for open or short circuit. (Continuity inspection)

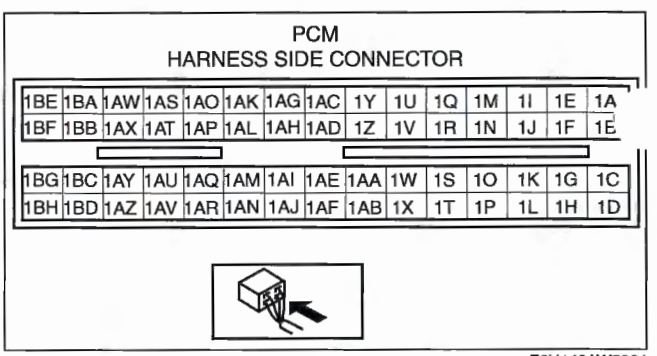

E6U140AW5991

Open circuit
- If there is no continuity, there is an open circuit. Repair or replace the wiring harness.
  - — MAF sensor terminal A and main relay terminal C
  - — MAF sensor terminal B and PCM terminal 1P
  - — MAF sensor terminal C and PCM terminal 1AK

Short circuit
- If there is continuity, there is a short circuit. Repair or replace the wiring harness.
  - — MAF sensor terminal A and body GND
  - — MAF sensor terminal B and power supply
  - — MAF sensor terminal C and power supply
  - — MAF sensor terminal C and body GND

Specification

Condition	Intake MAF (g/s)		Engine load calculated value (%)	
	MTX	ATX	MTX	ATX
Idle*1	2.50—2.70	2.72—2.94	15.9—17.1	17.1—18.5
Engine Speed 2,500 rpm*2	7.56—8.18	8.00—8.66	13.3—14.3	14.2—15.2

*1 : 650—750 rpm
*2 : No load or neutral position

INTAKE AIR TEMPERATURE (IAT) SENSOR INSPECTION [L3]

E6U014018842W03

Resistance Inspection

Note
- Perform the following inspection only when directed.

1. Disconnect MAF/IAT sensor.
2. Measure the resistance between the MAF/IAT sensor terminals D and E using an ohmmeter.
   - If not as specified, replace the MAF/IAT sensor.
   - If the MAF/IAT sensor is normal, but PID are out of specification, perform the "Circuit Open/ Short Inspection".

Specification

Ambient temperature (°C {°F})	Resistance (kilohm)
–20 {–4}	13.6—18.4
20 {68}	2.21—2.69
60 {140}	0.493—0.667

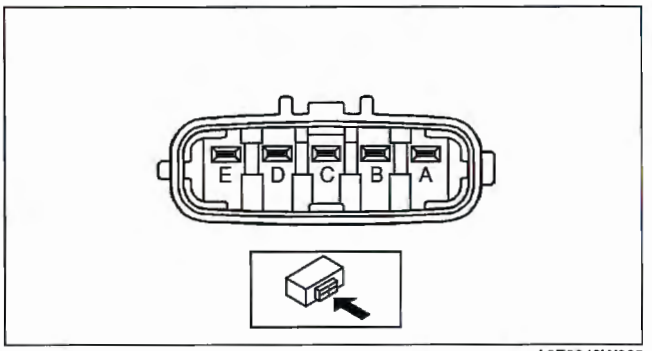

A6E3940W005

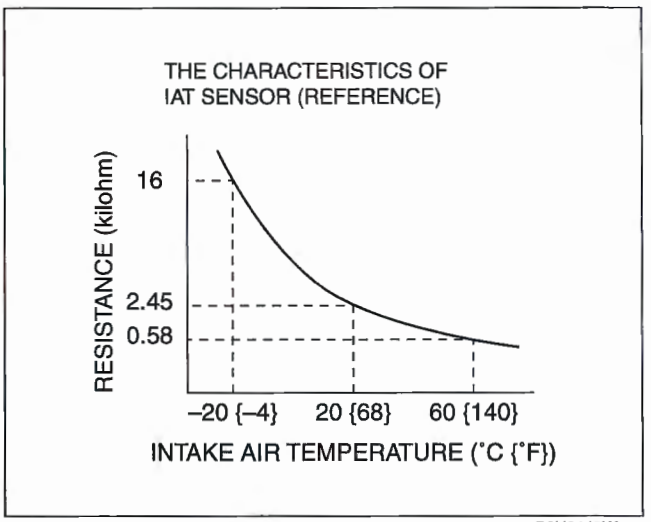

B6U0140W092

Circuit Open/Short Inspection

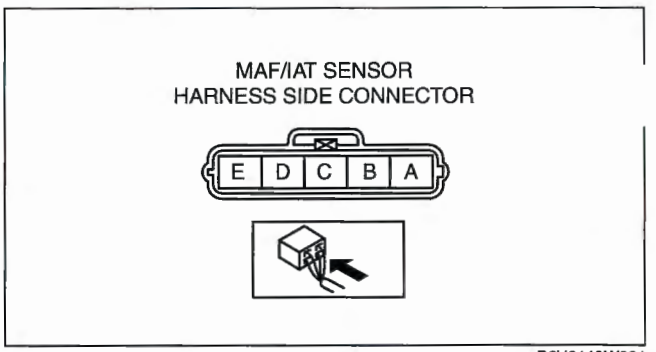

B6U0140W091

1. Disconnect the PCM connector. (See 01–40A–9 PCM REMOVAL/INSTALLATION [L3].)
2. Inspect the following wiring harnesses for open or short circuit. (Continuity inspection)

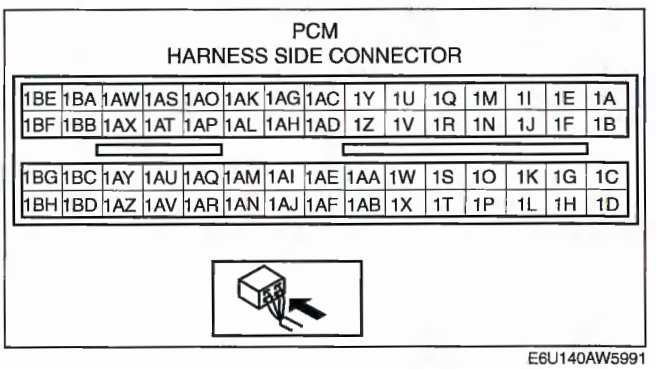

E6U140AW5991

Open circuit

- If there is no continuity, there is an open circuit. Repair or replace the wiring harness.
  - — MAF/IAT sensor terminal D and PCM terminal 1AT
  - — MAF/IAT sensor terminal E and PCM terminal 1AR

Short circuit

- If there is continuity, there is a short circuit. Repair or replace the wiring harness.
  - — MAF/IAT sensor terminal E and power supply
  - — MAF/IAT sensor terminal D and power supply
  - — MAF/IAT sensor terminal D and body GND

ENGINE COOLANT TEMPERATURE (ECT) SENSOR REMOVAL/INSTALLATION [L3]

E6U014018840W05

Warning

- **A hot engine can cause severe burns. Turn off the engine and wait until it is cool before removing the ECT sensor.**

1. Drain the engine coolant. (See 01–12A–3 COOLING SYSTEM SERVICE WARNINGS [L3, AJ].)
2. Disconnect the ECT sensor connector.
3. Remove the ECT sensor.
4. Install in the reverse order of removal.

Tightening torque
10—14 N·m
{1.02—1.42 kgf·m, 7.38—10.32 ft·lbf}

5. Refill the engine coolant. (See 01–12A–3 COOLING SYSTEM SERVICE WARNINGS [L3, AJ].)

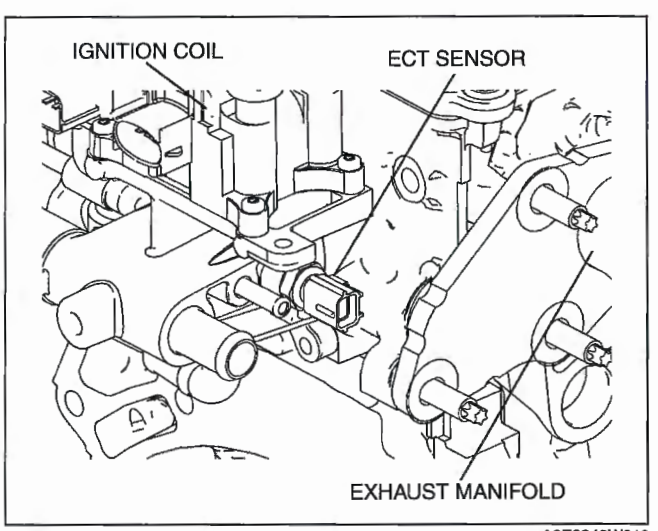

A6E3940W01

ENGINE COOLANT TEMPERATURE (ECT) SENSOR INSPECTION [L3]

E6U014018840W06

Note
- Perform the following inspection only when directed.

ECT Sensor Resistance Inspection

1. Drain the engine coolant. (See 01–12A–3 COOLING SYSTEM SERVICE WARNINGS [L3, AJ].)
2. Remove the ECT sensor (located above the starter).
3. Place the ECT sensor in water with a thermometer, and heat the water gradually.
4. Measure the resistance between the ECT sensor terminals A and B using an ohmmeter.
   - If not as specified, replace the ECT sensor.
   - If the ECT sensor is normal, but PID value is out of specification, perform the "Circuit Open/ Short Inspection".

Specification

Water temperature (°C {°F})	Resistance (kilohm)
20 {68}	35.48—39.20
70 {158}	5.07—5.60
80 {176}	3.65—4.02

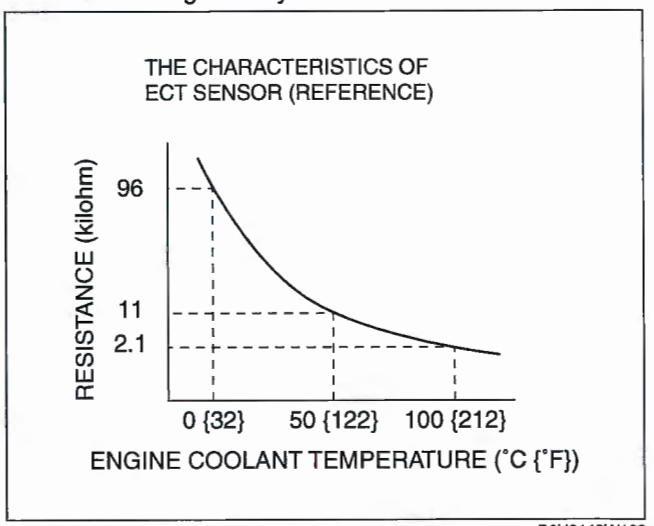

B6U0140W102

Circuit Open/Short Inspection

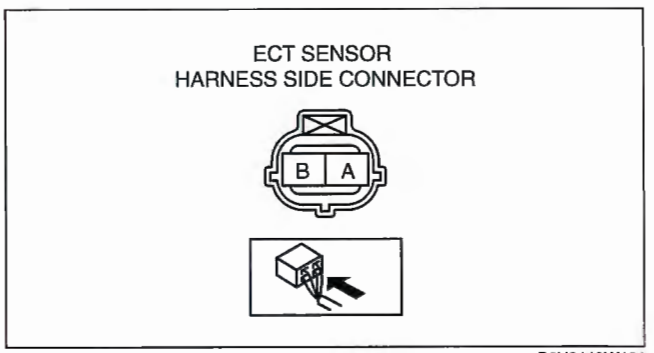

B6U0140W101

1. Disconnect the PCM connector. (See 01–40A–9 PCM REMOVAL/INSTALLATION [L3].)
2. Inspect the following wiring harnesses for open or short circuit. (Continuity inspection)

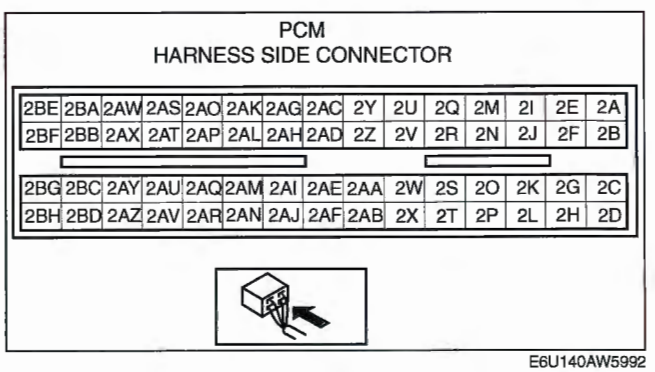

E6U140AW5992

Open circuit
- If there is no continuity, there is an open circuit. Repair or replace the wiring harness.
  - — ECT sensor terminal A and PCM terminal 2AH
  - — ECT sensor terminal B and PCM terminal 2AY

Short circuit
- If there is continuity, there is a short circuit. Repair or replace the wiring harness.
  - — ECT sensor terminal A and power supply
  - — ECT sensor terminal A and body GND
  - — ECT sensor terminal B and power supply

MANIFOLD ABSOLUTE PRESSURE (MAP) SENSOR INSPECTION [L3]

E6U014018212W01

Note
- Perform the following inspection only when directed.
- The following vacuum values are indicated by relative pressure from the MAP sensor.

1. Connect the WDS or equivalent to the DLC-2.
2. Turn the ignition switch to ON (Engine OFF).
3. Select MAP PID on the WDS or equivalent.
4. Verify that the MAP PID (pressure) and barometric pressure are practically equal.
   - If not as verified, perform the "Circuit Open/Short Inspection".
     — If there is no open or short circuit, replace the MAP sensor.
   - If as verified, go to next step.
5. Apply vacuum of **–25.0 kPa {–187 mmHg, –7.38 inHg}** to the MAP sensor, and verify that the MAP variation from that of Step 4 is approx. **25.0 kPa {187 mmHg, 7.38 inHg}**.
   - If not as verified, perform the "Circuit Open/Short inspection".
     — If there is no open or short circuit, replace the barometric pressure sensor.

Circuit Open/Short Inspection

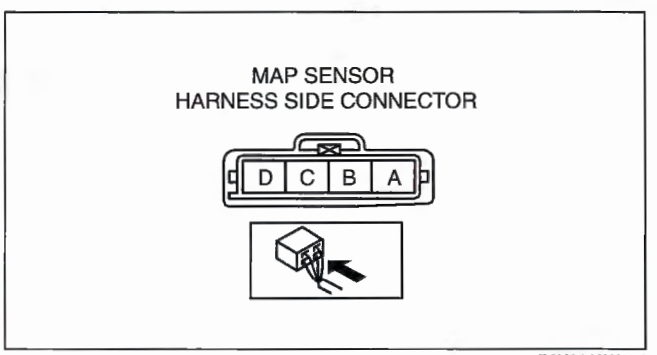

B6U0140W1[illegible]

1. Disconnect the PCM connector. (See 01–40A–9 PCM REMOVAL/INSTALLATION [L3].)
2. Inspect the following wiring harnesses for open or short circuit. (Continuity inspection)

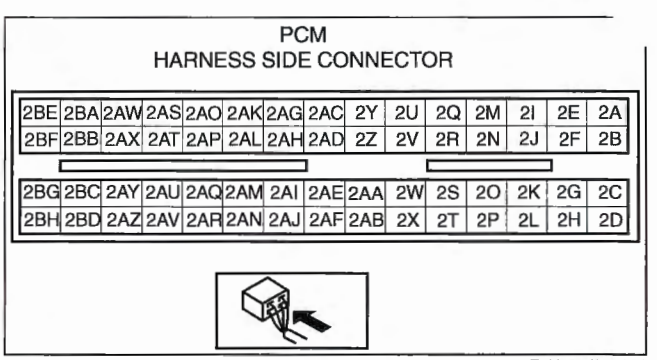

E6U140AW5992

Open circuit
- If there is no continuity, there is an open circuit. Repair or replace the wiring harness.
  — MAP sensor terminal A and PCM terminal 2AY
  — MAP sensor terminal D and PCM terminal 2AG
  — MAP sensor terminal C and PCM terminal 2AU

Short circuit
- If there is continuity, there is a short circuit. Repair or replace the wiring harness.
  — MAP sensor terminal A and power supply.
  — MAP sensor terminal C and power supply.
  — MAP sensor terminal C and body GND.
  — MAP sensor terminal D and power supply.
  — MAP sensor terminal D and body GND

HEATED OXYGEN SENSOR (HO2S) INSPECTION [L3]

E6U014018860W03

California Emission Regulation Applicable ATX Model

Note

- Before performing the following inspection, make sure to follow the troubleshooting flowchart. (See 01–03A–7 FOREWORD [L3].)

Front HO2S current inspection

1. Warm up the engine to normal operating temperature.
2. Using the WDS or equivalent, monitor the following:
   — Vehicle speed (PID: VSS)
   — Engine speed (PID: RPM)
   — Front HO2S current (PID: O2S11)
3. Drive the vehicle and decelerate the engine speed by releasing the accelerator pedal fully when the engine speed is **3,000 rpm or more**.
4. Verify that the front HO2S current (PID: O2S11) is **0.25 mA or more** while decelerating as shown in the figure.

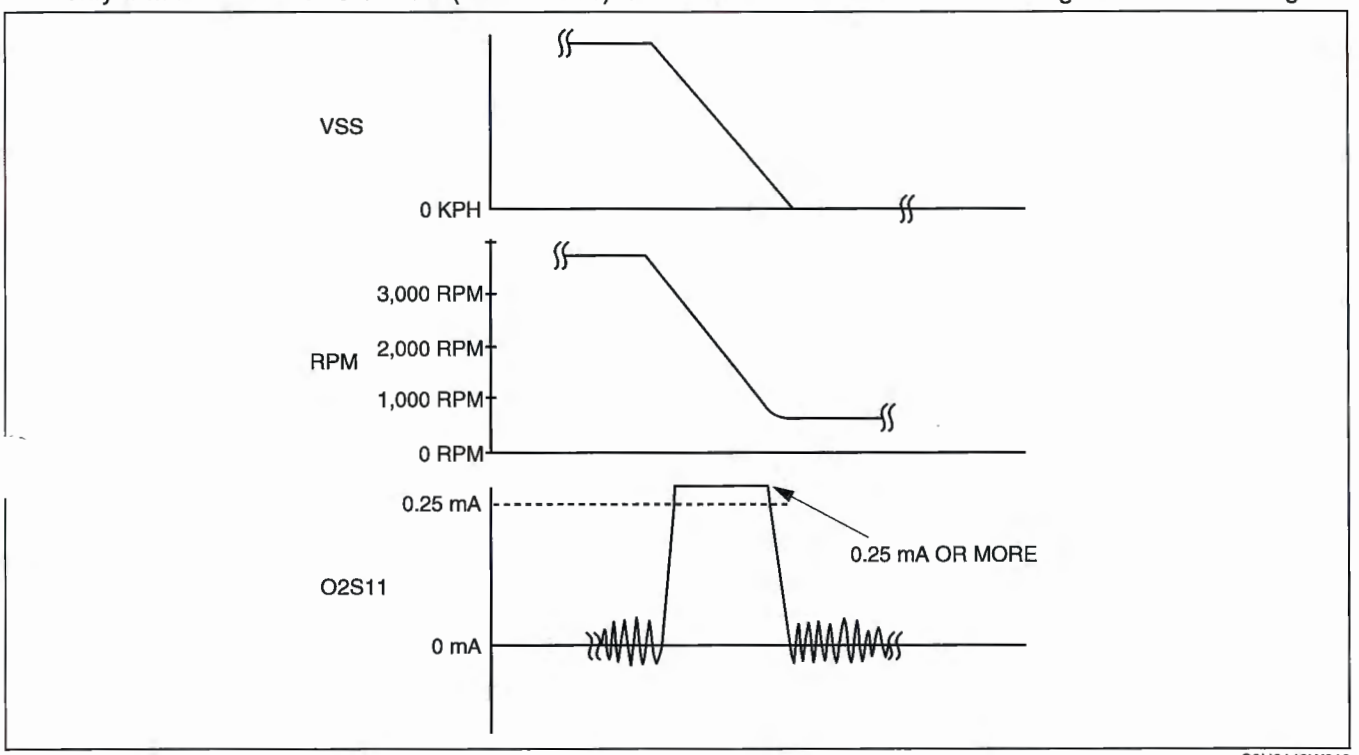

C3U0140W019

- If not within the specification, inspect the HO2S for an open or short circuit. (See 01–40A–38 Front HO2S circuit open/short inspection (sensor).) Then if there is no malfunction in the wiring harness, replace the front HO2S.

Front HO2S heater resistance inspection

1. Disconnect the front HO2S connector.
2. Measure the resistance between front HO2S terminals C and D.
   - If not within the specification, replace the front HO2S. (See 01–15A–2 EXHAUST SYSTEM REMOVAL/INSTALLATION [L3].)

Front HO2S heater resistance
1—10 ohms

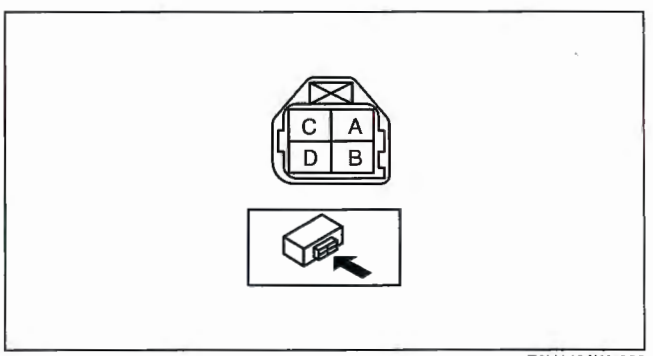

E6U140AW5803

Front HO2S circuit open/short inspection (sensor)

1. Disconnect the PCM connector.
2. Disconnect the front HO2S connector.
3. Inspect the following wiring harnesses for an open or short circuit. (Continuity inspection)

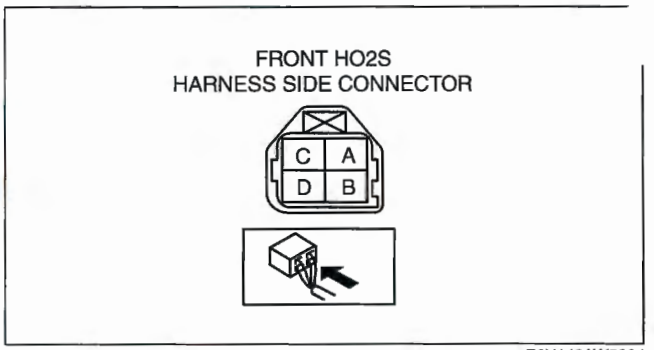

E6U140AW5804

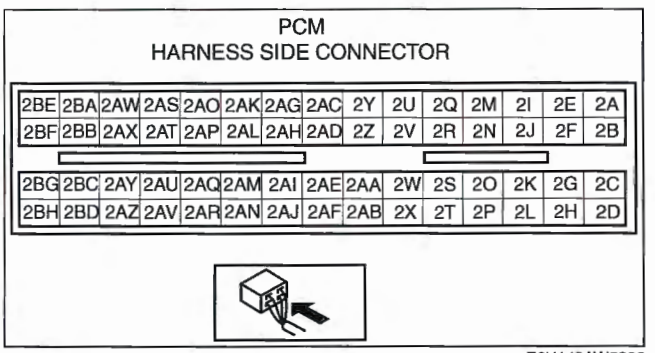

E6U140AW5992

Open circuit

- If there is no continuity in the following wiring harnesses, there is an open circuit. Repair or replace the wiring harness.
  - — Front HO2S terminal A and PCM terminal 2AD
  - — Front HO2S terminal B and PCM terminal 2Z
  - — Front HO2S terminal C and PCM terminal 2BG
  - — Front HO2S terminal D and ignition switch

Short circuit

- If there is continuity in the following wiring harnesses, there is a short circuit. Repair or replace the wiring harness.
  - — Front HO2S terminal A and body ground
  - — Front HO2S terminal A and power supply
  - — Front HO2S terminal B and body ground
  - — Front HO2S terminal B and power supply
  - — Front HO2S terminal D and body ground

Middle/rear HO2S voltage inspection

1. Warm up the engine to normal operating temperature.
2. Using the WDS or equivalent, monitor the following:
   - — Vehicle speed (PID: VSS)
   - — Engine speed (PID: RPM)
   - — Middle/rear HO2S voltage (PID: O2S12/O2S13)
3. Drive the vehicle and decelerate the engine speed by releasing the accelerator pedal fully when the engine speed is **3,000 rpm or more**.

4. Verify that the middle/rear HO2S outputs a voltage of **0.6 V or more**, one time or more, then verify that the middle/rear HO2S voltage (PID: O2S12/O2S13) is **0.3 V or less** while decelerating as shown in the figure.

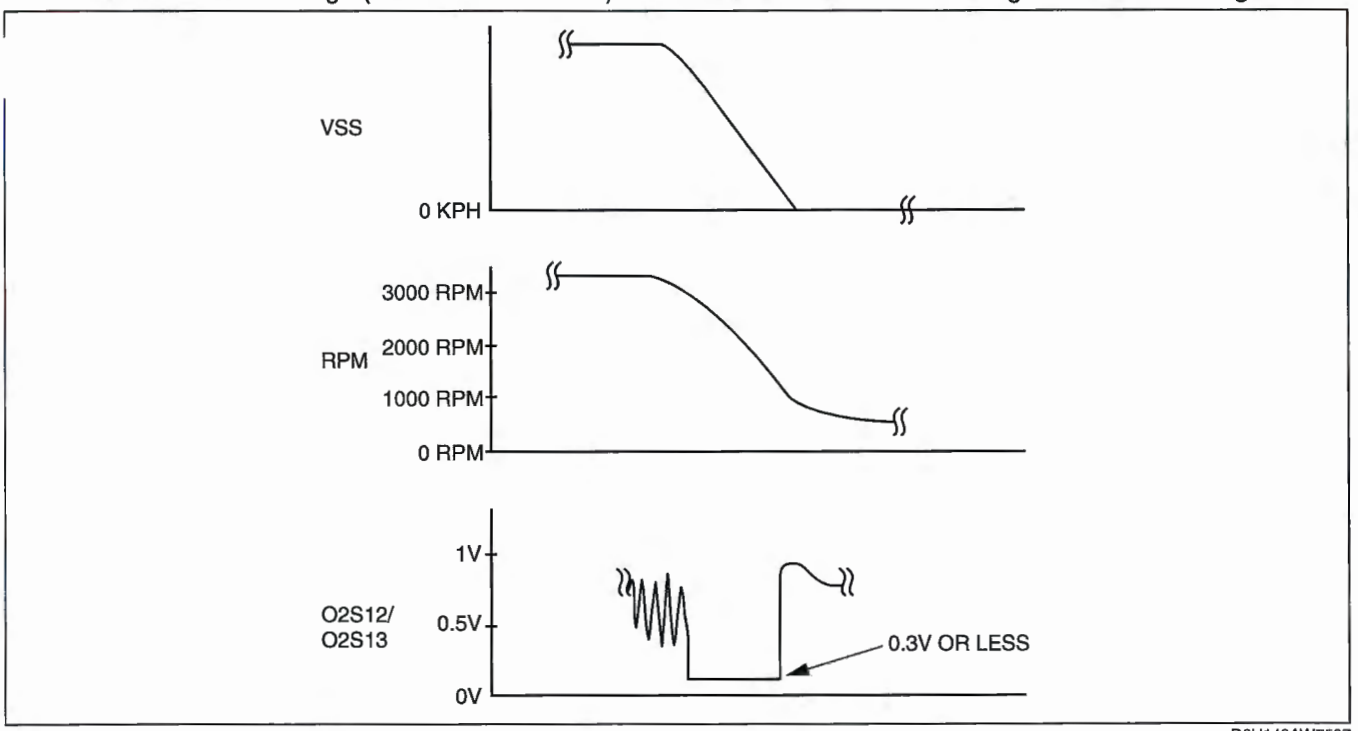

D6U140AW7507

- If not within the specification, inspect the HO2S for an open or short circuit. (See 01–40A–39 Middle/rear HO2S circuit open/short inspection (sensor).) Then if there is no malfunction in the wiring harness, replace the middle/rear HO2S.

Middle/rear HO2S circuit open/short inspection (sensor)

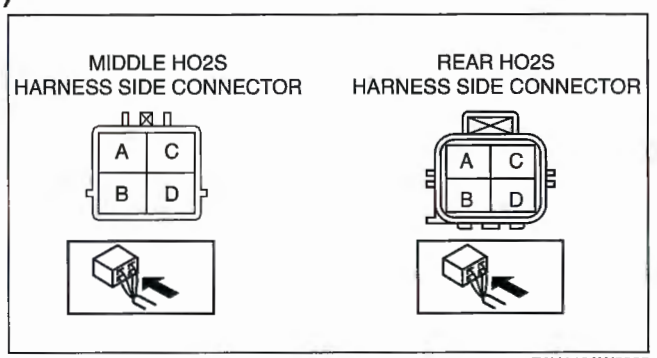

E6U140AW5805

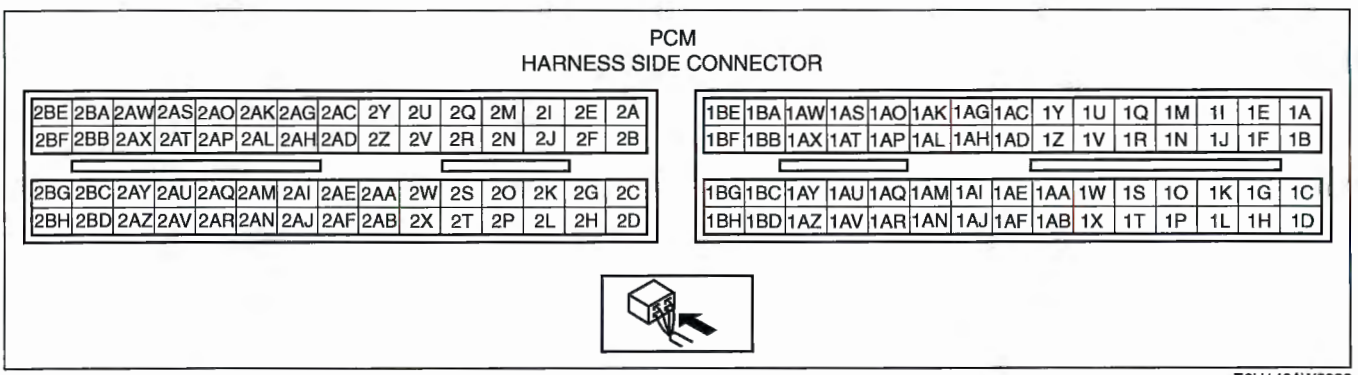

E6U140AW5990

Disconnect the PCM connector.

2. Inspect the following wiring harnesses for an open or short circuit. (Continuity inspection)

Open circuit
- If there is no continuity, there is an open circuit. Repair or replace the wiring harness.
  - — Middle HO2S terminal A and PCM terminal 2R
  - — Middle HO2S terminal B and PCM terminal 1BG
  - — Rear HO2S terminal A and PCM terminal 2Q
  - — Rear HO2S terminal B and PCM terminal 1BC

Short circuit
- If there is continuity, there is a short circuit. Repair or replace the wiring harness.
  - — Middle/rear HO2S terminal A and body GND
  - — Middle/rear HO2S terminal A and power supply
  - — Middle/rear HO2S terminal B and power supply

Middle/rear HO2S heater resistance inspection

1. Disconnect the middle/rear HO2S connector.
2. Measure the middle/rear HO2S resistance between terminals C and D.
   - If not within the specification, replace the HO2S.

Middle/rear HO2S heater resistance
2—50 ohms

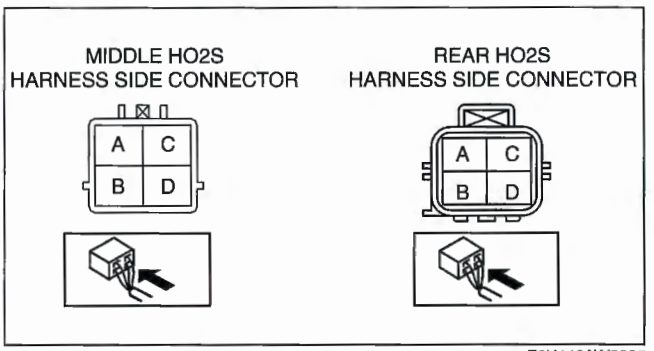

E6U140AW5805

Middle/rear HO2S circuit open/short inspection (heater)

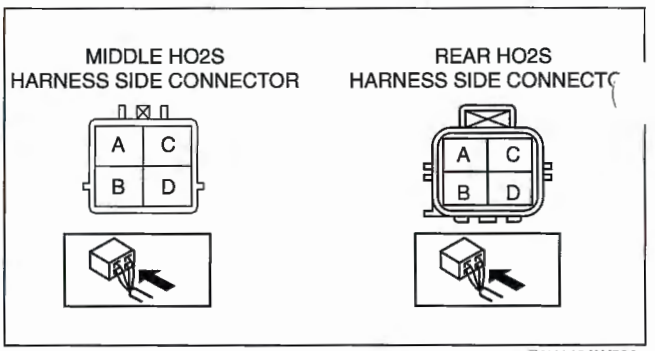

E6U140AW5805

1. Disconnect the PCM connector.
2. Inspect the following wiring harnesses for an open or short circuit. (Continuity inspection)

Open circuit
- If there is no continuity, there is an open circuit. Repair or replace the wiring harness.
  - — Middle HO2S terminal C and ignition switch
  - — Middle HO2S terminal D and PCM terminal 2BF
  - — Rear HO2S terminal C and ignition switch
  - — Rear HO2S terminal D and PCM terminal 2BE

Short circuit
- If there is no continuity, there is a short circuit. Repair or replace the wiring harness.
  Middle and rear
  - — Middle/rear HO2S terminal C and body GND
  - — Middle/rear HO2S terminal D and power supply
  - — Middle/rear HO2S terminal D and body GND

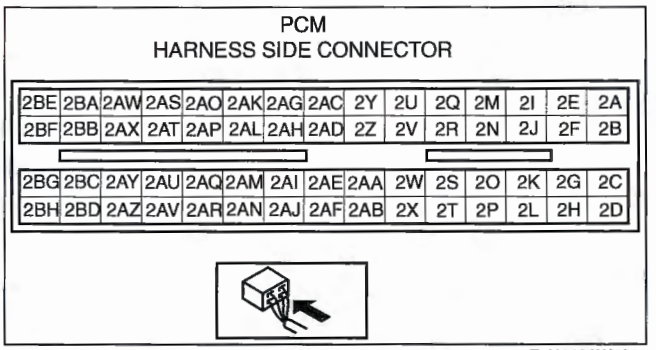

E6U140AW5992

Except for California Emission Regulation Applicable ATX Model

Note
- Before performing the following inspection, make sure to follow the procedure as indicated in the troubleshooting flowchart.

Front HO2S current inspection
1. Warm up the engine to normal operating temperature.
2. Using the WDS or equivalent, monitor the following:
   — Vehicle speed (PID: VSS)
   — Engine speed (PID: RPM)
   — Front HO2S current (PID: O2S11)
3. Drive the vehicle and decelerate the engine speed by releasing the accelerator pedal fully when the engine speed is **3,000 rpm or more**.
4. Verify that the front HO2S current (PID: O2S11) is **0.25 mA or more** while decelerating as shown in the figure.

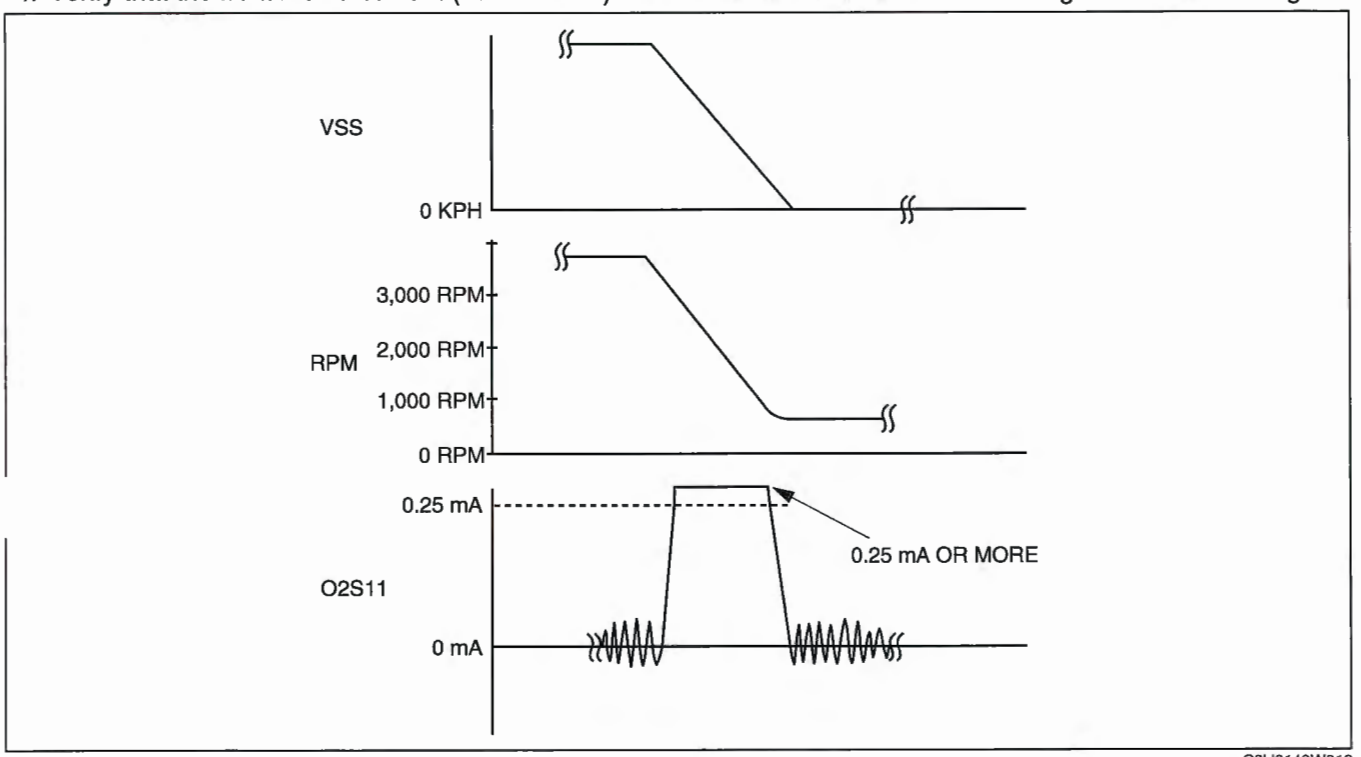

C3U0140W019

- If not within the specification, inspect the HO2S for an open or short circuit. (See 01–40A–38 Front HO2S circuit open/short inspection (sensor).) Then if there is no malfunction in the wiring harness, replace the front HO2S.

Front HO2S heater resistance inspection
1. Disconnect the front HO2S connector.
2. Measure the resistance between front HO2S terminals 2B and 2D.
   - If not within the specification, replace the front HO2S. (See 01–15A–2 EXHAUST SYSTEM REMOVAL/INSTALLATION [L3].)

Front HO2S heater resistance
1—10 ohms

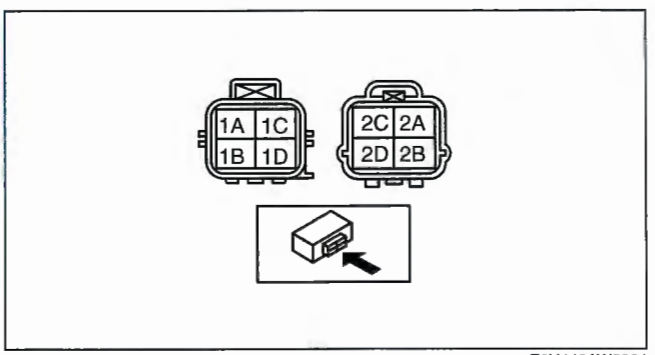

E6U140AW5801

Front HO2S circuit open/short inspection (sensor)

1. Disconnect the PCM connector.
2. Disconnect the front HO2S connector.
3. Inspect the following wiring harnesses for an open or short circuit. (Continuity inspection)

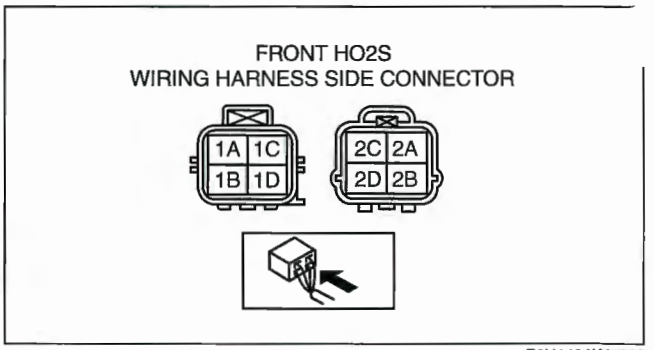

E6U140AW5802

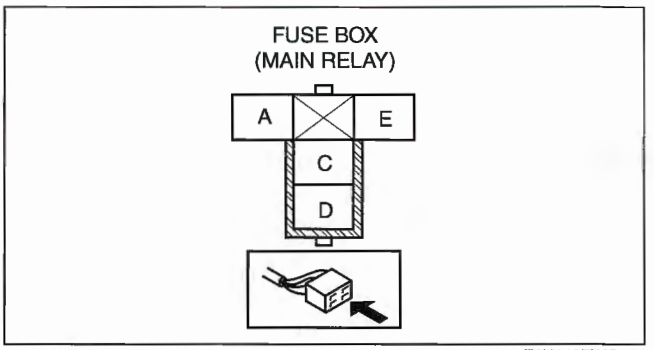

E6U140ZWC304

Open circuit

- If there is no continuity in the following wiring harnesses, there is an open circuit. Repair or replace the wiring harness.
  - — Front HO2S terminal 1A and PCM terminal 2AD
  - — Front HO2S terminal 1B and PCM terminal 2AC
  - — Front HO2S terminal 1C and PCM terminal 2Z
  - — Front HO2S terminal 2B and main relay terminal C
  - — Front HO2S terminal 2D and PCM terminal 2BG

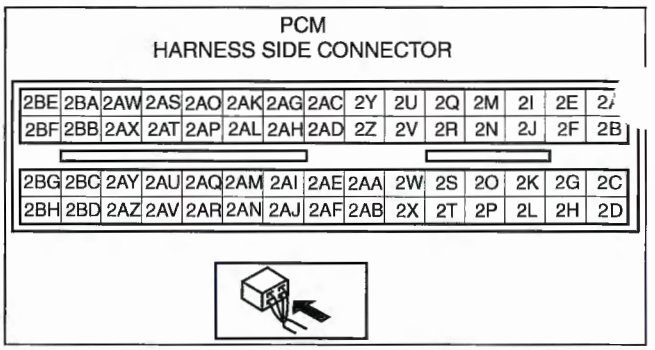

E6U140AW5992

Short circuit

- If there is continuity in the following wiring harnesses, there is a short circuit. Repair or replace the wiring harness.
  - — Front HO2S terminal 1A and body ground
  - — Front HO2S terminal 1A and power supply
  - — Front HO2S terminal 1B and body ground
  - — Front HO2S terminal 1B and power supply
  - — Front HO2S terminal 1C and body ground
  - — Front HO2S terminal 1C and power supply
  - — Front HO2S terminal 2B and body ground
  - — Front HO2S terminal 2B and power supply
  - — Front HO2S terminal 2D and body ground
  - — Front HO2S terminal 2D and power supply

Rear HO2S voltage inspection

1. Warm up the engine to normal operating temperature.
2. Using the WDS or equivalent, monitor the following:
   — Vehicle speed (PID: VSS)
   — Engine speed (PID: RPM)
   — Rear HO2S voltage (PID: O2S12)
3. Drive the vehicle and decelerate the engine speed by releasing the accelerator pedal fully when the engine speed is **3,000 rpm or more**.
4. Verify that the rear HO2S outputs a voltage of **0.6 V or more**, one time or more, then verify that the rear HO2S voltage (PID: O2S12) is **0.3 V or less** while decelerating as shown in the figure.

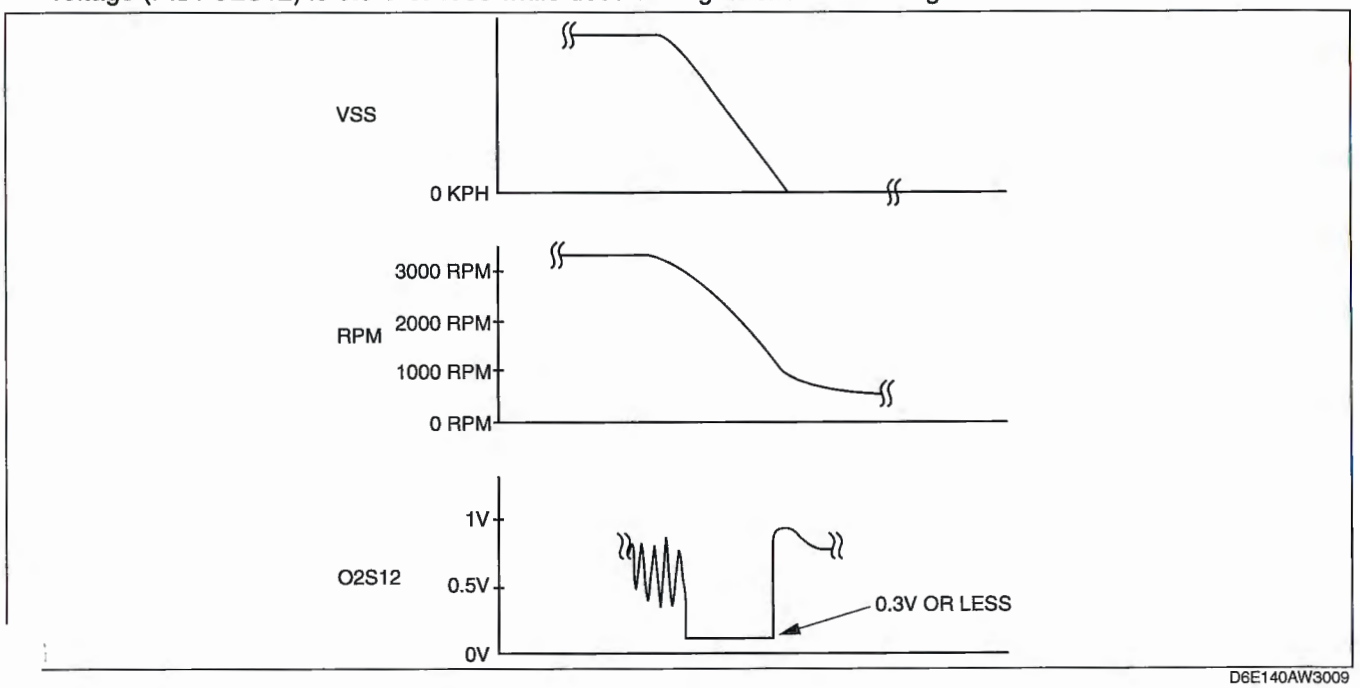

D6E140AW3009

- If not within the specification, inspect the HO2S for an open or short circuit. (See 01–40A–43 Rear HO2S circuit open/short inspection (sensor).) Then if there is no malfunction in the wiring harness, replace the rear HO2S.

Rear HO2S circuit open/short inspection (sensor)

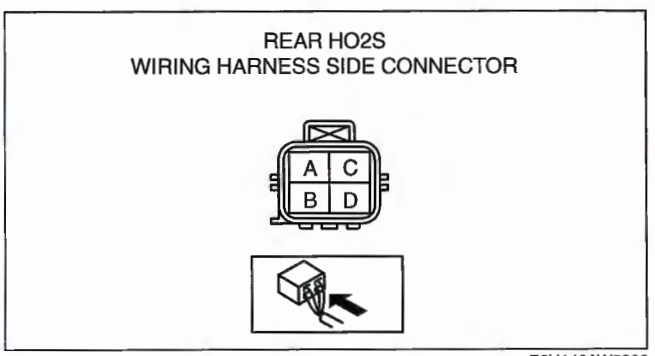

E6U140AW5806

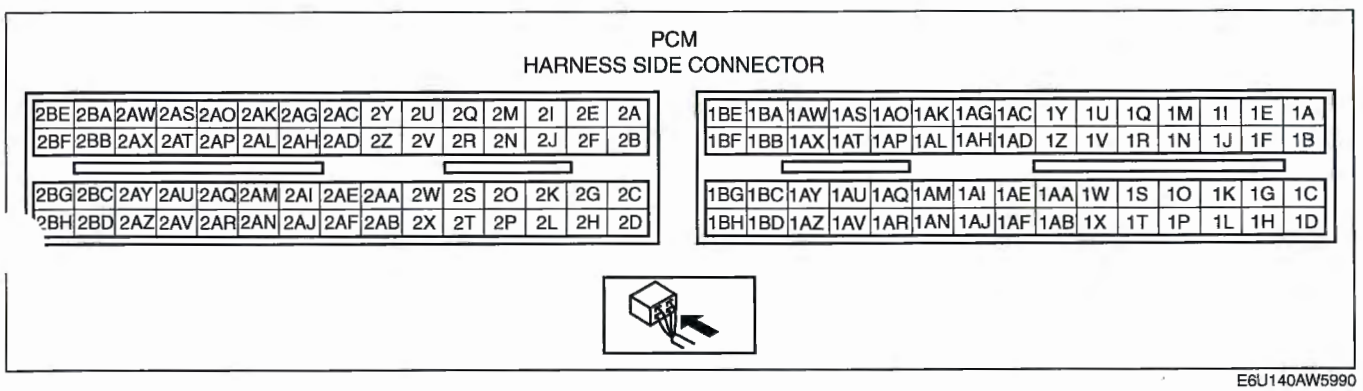

E6U140AW5990

1. Disconnect the PCM connector.
2. Disconnect the rear HO2S connector.
3. Inspect the following wiring harnesses for an open or short circuit. (Continuity inspection)

Open circuit

- If there is no continuity, there is an open circuit. Repair or replace the wiring harness.
  - — Rear HO2S terminal A and PCM terminal 2Q
  - — Rear HO2S terminal B and PCM terminal 1BC

Short circuit

- If there is continuity, there is a short circuit. Repair or replace the wiring harness.
  - — Rear HO2S terminal A and body ground
  - — Rear HO2S terminal A and power supply
  - — Rear HO2S terminal B and power supply

Rear HO2S heater resistance inspection

1. Disconnect the rear HO2S connector.
2. Measure the rear HO2S resistance between terminals C and D.
   - If not within the specification, replace the HO2S.

Rear HO2S heater resistance
2—50 ohms

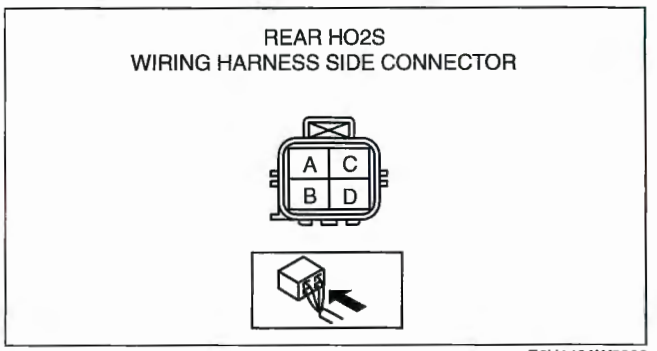

E6U140AW5806

Rear HO2S circuit open/short inspection (heater)

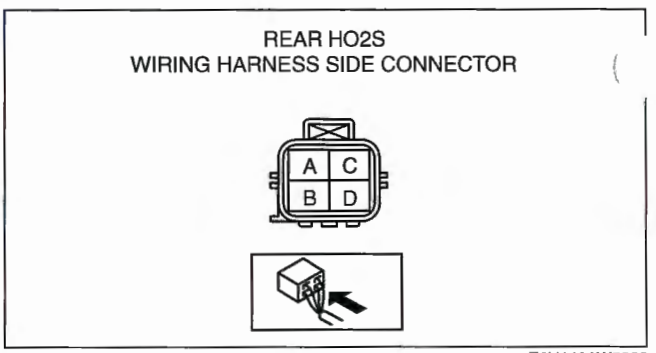

E6U140AW5806

1. Disconnect the PCM connector.
2. Disconnect the rear HO2S connector.
3. Inspect the following wiring harnesses for an open or short circuit. (Continuity inspection)

Open circuit

- If there is no continuity, there is an open circuit. Repair or replace the wiring harness.
  - — Rear HO2S terminal C and ignition switch
  - — Rear HO2S terminal D and PCM terminal 2BE

Short circuit

- If there is no continuity, there is a short circuit. Repair or replace the wiring harness.
  Rear
  - — Rear HO2S terminal C and body ground
  - — Rear HO2S terminal D and power supply
  - — Rear HO2S terminal D and body ground

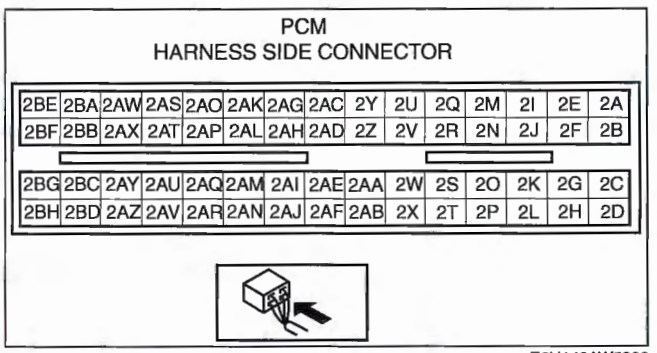

E6U140AW5992

CRANKSHAFT POSITION (CKP) SENSOR REMOVAL/INSTALLATION [L3]

E6U014018220W01

Removal

1. Perform the following procedure to making the working space.
   (1) Remove the Front wheel (RH).
   (2) Remove the splash shield.
2. Disconnect the CKP sensor connector.
3. Remove the installation bolts to remove the CKP sensor.

Installation

Caution

- **When foreign material such as an iron chip is on the CKP sensor, it can cause abnormal output from the sensor because of flux turbulence and adversely affect the engine control. Be sure there is no foreign material on the CKP sensor when replacing.**

1. Perform the following procedure so that piston No.1 is at the top dead center.
   (1) Remove the front drive shaft (RH). (See 03–13–16 FRONT DRIVE SHAFT REMOVAL/INSTALLATION [L3, L3 WITH TC].)
   (2) Remove the cylinder block lower blind plug and install the **SST**.
   (3) Turn the crankshaft pulley to the clockwise until it stops.
2. Install the CKP sensor to the CKP sensor installer.

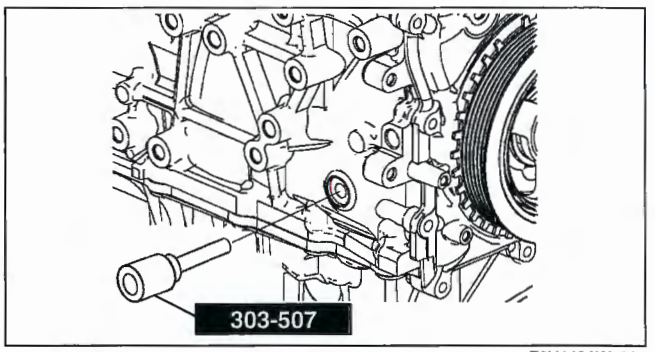

E6U140AW5005

Fit the forked part of the CKP sensor installer with the fifth tooth (counting counterclockwise from the empty space A as shown in the figure) of the pulse wheel.

4. Install the CKP sensor fitting bolts.

   Tightening torque
   5.5—7.5 N·m {56—76 kgf·cm, 4.1—5.5 ft·lbf}

5. Remove the CKP sensor installer
6. Remove the **SST** then install the cylinder block lower blind plug.

   Tightening torque
   20 N·m {2.0 kgf·m, 15 ft·lbf}

7. Install the front drive shaft (RH). (See 03–13–16 FRONT DRIVE SHAFT REMOVAL/ INSTALLATION [L3, L3 WITH TC].)

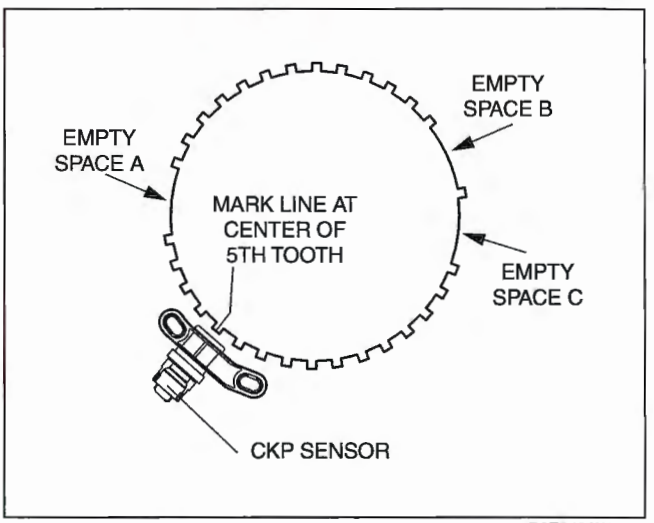

D6E140AW3104

CRANKSHAFT POSITION (CKP) SENSOR INSPECTION [L3]

E6U014018220W02

Note
- Perform the following inspection according to the DATA MONITOR function (indicated by monitor item fro' here onwards).

Air Gap Inspection
1. Verify that the CKP sensor is securely installed.
2. Using a thickness gauge, measure the air gap between the plate projections at the back of crankshaft pulley and the CKP sensor.
   - If not within the specification, inspect the plate projections for cracks or bending.
     — If there is any malfunction, replace the plate.
     — If the monitor item condition/specification (reference) is not within the specification, even though there is no malfunction, carry out the "Circuit Open/Short Inspection".

Air gap
0.5—1.5 mm {0.02—0.05 in}

Visual Inspection
1. Disconnect the negative battery cable.
2. Remove the CKP sensor. (See 01–40A–46 CRANKSHAFT POSITION (CKP) SENSOR INSPECTION [L3].)
3. Verify that there are no metal shavings on the sensor.
   - If the monitor item condition/specification (reference) is without the specification even though there is no malfunction, carry out the "Circuit Open/Short Inspection".

Voltage Inspection
1. Idle the engine.

Caution
- **Water penetrating the connector will cause sensor malfunction. To prevent this, be careful not to damage the wiring harnesses or the waterproof connector so as to cause water penetration.**

2. Measure the output voltage using a oscilloscope.
   - If not within the specification, replace the CKP sensor.
   - If the monitor item condition/specification (reference) is without the specification, even though the voltage is within the specification, carry out the "Circuit Open/Short Inspection".

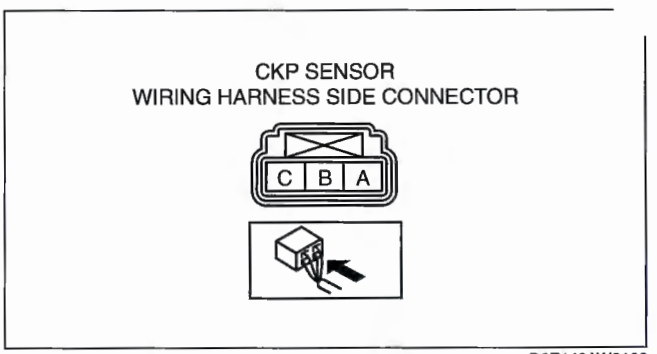

D6E140AW3103

Voltage

Terminal	Voltage (V)	Condition
A	0	Under any condition
B	4.8 or more	High output*
	0.8 or less	Low output*
C	B+	Under any condition

* : Output voltage varies with crankshaft rotation.

Circuit Open/Short Inspection

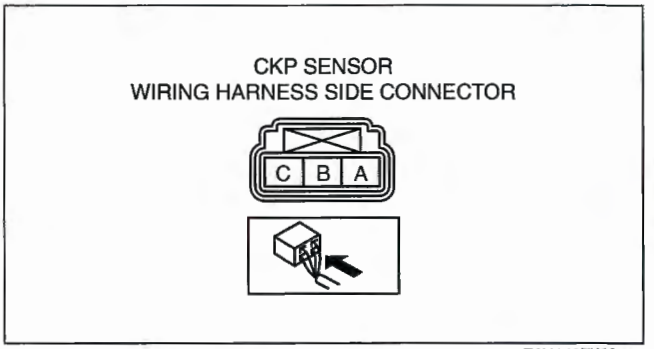

E6U140ZWC310

1. Inspect the following wiring harnesses for an open or short circuit. (Continuity inspection)

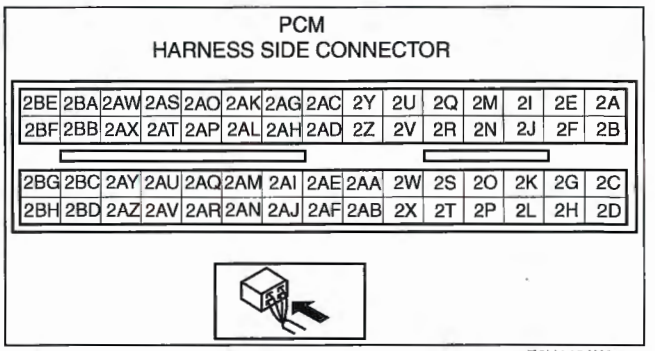

E6U140AW5992

Open circuit

- If there is no continuity, the circuit is open. Repair or replace the wiring harness.
  - — CKP sensor terminal A and body ground
  - — CKP sensor terminal B and PCM terminal 2W
  - — CKP sensor terminal C and PCM terminal 2AQ

Short circuit

- If there is continuity, the circuit is shorted. Repair or replace the wiring harness.
  - — CKP sensor terminal A and power supply
  - — CKP sensor terminal B and power supply
  - — CKP sensor terminal B and body ground
  - — CKP sensor terminal C and body ground

CAMSHAFT POSITION (CMP) SENSOR REMOVAL/INSTALLATION [L3]

E6U014018230W09

1. Remove the battery cover.
2. Disconnect the negative battery cable.
3. Remove the plug hole cover.

Caution

- **When replacing the CMP sensor, make sure there is no foreign material on it such as metal shavings. If it is installed with foreign material, the sensor output signal will malfunction resulting from fluctuation in magnetic flux and cause a deterioration in engine control.**

4. Disconnect the CMP sensor connector.
5. Remove the CMP sensor installation bolt.
6. Remove the CMP sensor from the cylinder head cover.
7. Install in the reverse order of removal.

Tightening torque
5.5—7.5 N·m {56—76 kgf·cm, 49—66 in·lbf}

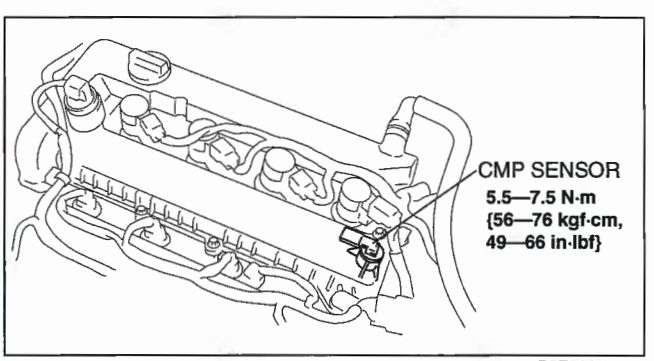

B3E0140W019

CAMSHAFT POSITION (CMP) SENSOR INSPECTION [L3]

E6U014018230W10

Note
- Perform the following inspection according to the DATA MONITOR function (indicated by monitor item fro' here onwards).

Visual Inspection
1. Disconnect the negative battery cable.
2. Remove the CMP sensor. (See 01–40A–47 CAMSHAFT POSITION (CMP) SENSOR REMOVAL/ INSTALLATION [L3].)
3. Verify that there are no metal shavings on the sensor.
   - If the monitor item condition/specification (reference) is not within the specification even though there is no malfunction, carry out the "Circuit Open/Short Inspection".

Voltage inspection
1. Idle the engine.

Caution
- **Water penetrating the connector will cause sensor malfunction. To prevent this, be careful not to damage the wiring harnesses or the waterproof connector so as to cause water penetration.**

2. Measure the output voltage using a oscilloscope.
   - If not within the specification, replace the CMP sensor.
   - If the monitor item condition/specification (reference) is not within the specification, even though the voltage is within the specification, carry out the "Circuit Open/ Short Inspection".

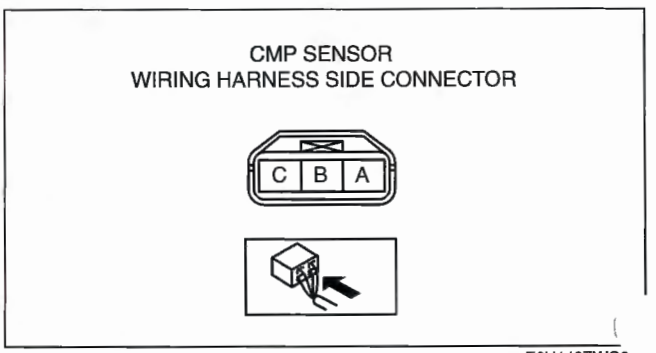

E6U140ZWC3

Voltage

Terminal	Voltage (V)	Condition
A	0	Under any condition
B	4.8 or more	High output*
	0.8 or less	Low output*
C	B+	Under any condition

* : Output voltage varies with camshaft rotation.

Circuit Open/Short Inspection

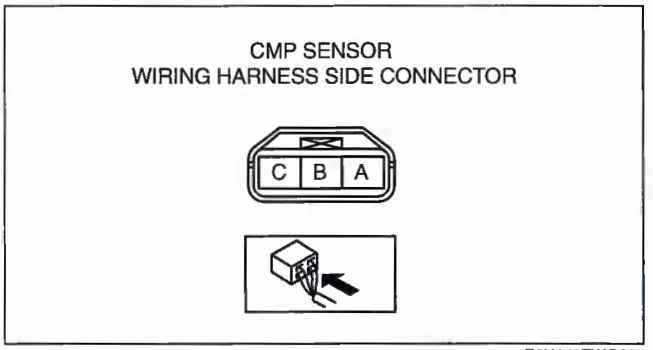

E6U140ZWC308

1. Inspect the following wiring harnesses for an open or short circuit. (Continuity inspection)

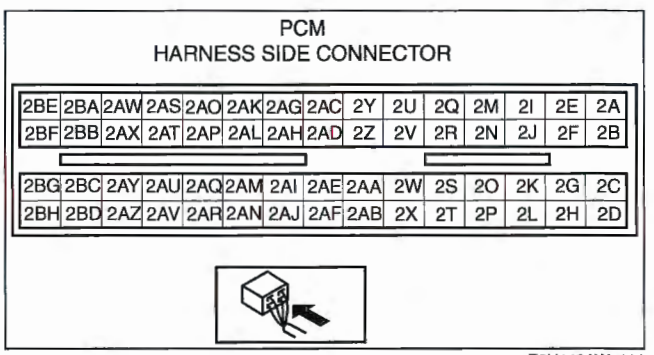

E6U140AW5992

Open circuit

- If there is no continuity, the circuit is open. Repair or replace the wiring harness.
  - — CMP sensor terminal A and body ground
  - — CMP sensor terminal B and PCM terminal 2S
  - — CMP sensor terminal C and PCM terminal 2AM

Short circuit

- If there is continuity, the circuit is shorted. Repair or replace the wiring harness.
  - — CMP sensor terminal A and power supply
  - — CMP sensor terminal B and power supply
  - — CMP sensor terminal B and body ground
  - — CMP sensor terminal C and power supply

KNOCK SENSOR (KS) REMOVAL/INSTALLATION [L3]

E6U014018920W06

1. Remove the intake manifold. (See01–13A–4 INTAKE AIR SYSTEM REMOVAL/INSTALLATION [L3])
2. Remove the KS attachment bolt to remove the KS.
3. Install in the reverse order of removal.

Tightening torque
16.2—23.8 N·m
{1.66—2.42 kgf·m, 12.0—17.5 ft·lbf}

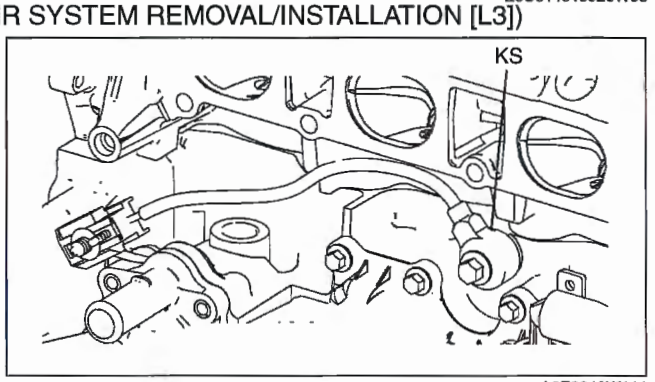

A6E3940W016

KNOCK SENSOR (KS) INSPECTION [L3]

E6U014018920W05

Note

- Perform the following test only when directed.

Resistance Inspection

1. Turn the ignition switch to LOCK.
2. Disconnect the KS connector.
3. Measure the resistance between the KS terminals A and B using an ohmmeter.
   - If not as specified, replace the KS.
   - If the KS is normal, but PID value is out of specification, perform the “Circuit Open/Short Inspection”.

Specification
Approx. 4.87 megohms

Circuit Open/Short Inspection

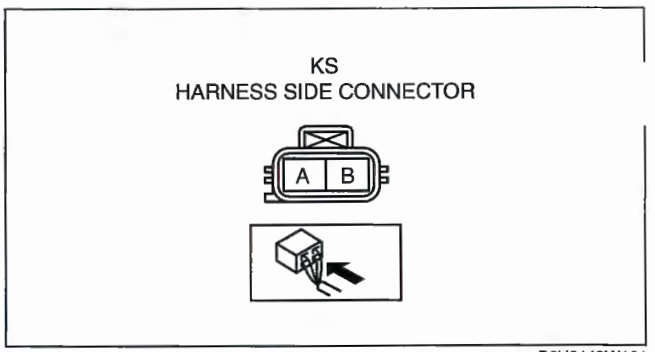

B6U0140W161

1. Disconnect the PCM connector. (See 01–40A–9 PCM REMOVAL/INSTALLATION [L3].)
2. Inspect the following wiring harnesses for open or short circuit. (Continuity inspection)

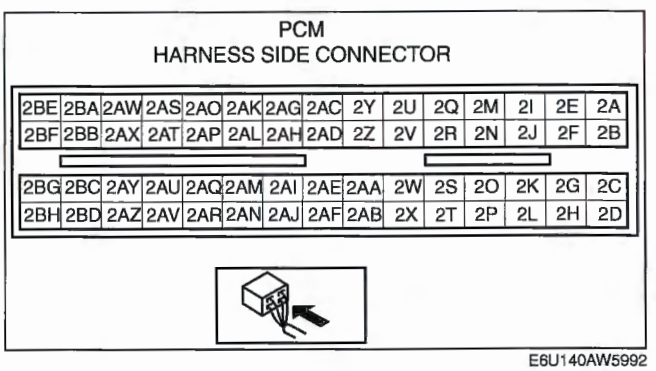

E6U140AW5992

Open circuit

- If there is no continuity, there is an open circuit. Repair or replace the wiring harness.
  - — KS terminal A and PCM terminal 2U
  - — KS terminal B and PCM terminal 2V

Short circuit

- If there is continuity, there is a short circuit. Repair or replace the wiring harness.
  - — KS terminal A and power supply
  - — KS terminal A and body GND
  - — KS terminal B and power supply
  - — KS terminal B and body GND

BAROMETRIC PRESSURE (BARO) SENSOR INSPECTION [L3 (VEHICLES EQUIPPED WITH BARO SENSOR BUILT INTO PCM)]

E6U014018211W03

Note

- Perform the following inspection only when directed.
- The following vacuum values are indicated by relative pressure from the PCM. (See 01–40A–9 PCM REMOVAL/INSTALLATION [L3].)

1. Connect the WDS or equivalent to the DLC-2.
2. Turn the ignition switch to the ON position.
3. Select BARO on the WDS or equivalent.
4. Verify that the BARO PID (pressure) and barometric pressure are practically equal.
   - If not as verified, perform the "Circuit Open/Short Inspection".
     - — If there is no open or short circuit, replace the PCM.

01–40B CONTROL SYSTEM [L3 WITH TC]

CONTROL SYSTEM COMPONENT LOCATION INDEX [L3 WITH TC] 01–40B–2
CONTROL SYSTEM DIAGRAM [L3 WITH TC] 01–40B–3
CONTROL SYSTEM WIRING DIAGRAM [L3 WITH TC] 01–40B–4
PCM REMOVAL/INSTALLATION [L3 WITH TC] 01–40B–6
PCM INSPECTION [L3 WITH TC] 01–40B–6
Using the WDS or Equivalent 01–40B–6
Without Using the SST 01–40B–12
PCM CONFIGURATION [L3 WITH TC] 01–40B–20
INJECTOR DRIVER MODULE REMOVAL/INSTALLATION [L3 WITH TC] 01–40B–21
INJECTOR DRIVER MODULE INSPECTION [L3 WITH TC] 01–40B–21
CLUTCH PEDAL POSITION (CPP) SWITCH INSPECTION [L3 WITH TC] 01–40B–22
Continuity Inspection 01–40B–22
Circuit Open/Short Inspection 01–40B–22
NEUTRAL SWITCH INSPECTION [L3 WITH TC] 01–40B–23
Continuity Inspection 01–40B–23
Circuit Open/Short Inspection 01–40B–23
POWER STEERING PRESSURE (PSP) SWITCH INSPECTION [L3 WITH TC] 01–40B–24
Continuity Inspection 01–40B–24
Circuit Open/Short Inspection 01–40B–24
VARIABLE SWIRL SHUTTER VALVE SWITCH INSPECTION [L3 WITH TC] 01–40B–25
Voltage Inspection 01–40B–25
Circuit Open/Short Inspection 01–40B–25
ACCELERATOR PEDAL POSITION (APP) SENSOR INSPECTION [L3 WITH TC] 01–40B–26
Voltage Inspection 01–40B–26
Circuit Open/Short Inspection 01–40B–27
THROTTLE POSITION (TP) SENSOR INSPECTION [L3 WITH TC] 01–40B–27
Voltage Inspection 01–40B–27
Circuit Open/Short Inspection 01–40B–28
MASS AIR FLOW (MAF) SENSOR INSPECTION [L3 WITH TC] 01–40B–29
Visual Inspection 01–40B–29
Circuit Open/Short Inspection 01–40B–29
ENGINE COOLANT TEMPERATURE (ECT) SENSOR REMOVAL/INSTALLATION [L3 WITH TC] 01–40B–30
ENGINE COOLANT TEMPERATURE (ECT) SENSOR INSPECTION [L3 WITH TC] 01–40B–30
ECT Sensor Resistance Inspection 01–40B–30
Circuit Open/Short Inspection 01–40B–31
MANIFOLD ABSOLUTE PRESSURE (MAP) SENSOR INSPECTION [L3 WITH TC] 01–40B–31
Circuit Open/Short Inspection 01–40B–31
MANIFOLD ABSOLUTE PRESSURE (MAP) SENSOR/BOOST AIR TEMPERATURE SENSOR REMOVAL/INSTALLATION [L3 WITH TC] 01–40B–31
BOOST AIR TEMPERATURE SENSOR INSPECTION [L3 WITH TC] 01–40B–32
Resistance Inspection 01–40B–32
Circuit Open/Short Inspection 01–40B–33
INTAKE AIR TEMPERATURE (IAT) SENSOR INSPECTION [L3 WITH TC] 01–40B–33
Resistance Inspection 01–40B–33
Circuit Open/Short Inspection 01–40B–34
BAROMETRIC PRESSURE (BARO) SENSOR INSPECTION [L3 WITH TC] 01–40B–34
FUEL PRESSURE SENSOR REMOVAL/INSTALLATION [L3 WITH TC] 01–40B–34
FUEL PRESSURE SENSOR INSPECTION [L3 WITH TC] 01–40B–34
Circuit Open/Short Inspection 01–40B–35
KNOCK SENSOR (KS) INSPECTION [L3 WITH TC] 01–40B–35
Resistance Inspection 01–40B–35
Circuit Open/Short Inspection 01–40B–36
KNOCK SENSOR (KS) REMOVAL/INSTALLATION [L3 WITH TC] 01–40B–36
CAMSHAFT POSITION (CMP) SENSOR INSPECTION [L3 WITH TC] 01–40B–36
Visual Inspection 01–40B–36
Voltage inspection 01–40B–36
Circuit Open/Short Inspection 01–40B–37
CAMSHAFT POSITION (CMP) SENSOR REMOVAL/INSTALLATION [L3 WITH TC] 01–40B–38
CRANKSHAFT POSITION (CKP) SENSOR INSPECTION [L3 WITH TC] 01–40B–38
Air Gap Inspection 01–40B–38
Visual inspection 01–40B–39
Voltage Inspection 01–40B–39
Circuit Open/Short Inspection 01–40B–40
CRANKSHAFT POSITION (CKP) SENSOR REMOVAL/INSTALLATION [L3 WITH TC] 01–40B–41
Removal 01–40B–41
Installation 01–40B–41
HEATED OXYGEN SENSOR (HO2S) INSPECTION [L3 WITH TC] 01–40B–42
Front HO2S Current Inspection 01–40B–42
Front HO2S heater resistance inspection 01–40B–42
Front HO2S circuit open/short inspection(sensor) 01–40B–43
Rear HO2S voltage inspection 01–40B–44

Rear HO2S circuit open/short inspection (sensor) 01–40B–44
Rear HO2S heater esistance inspection 01–40B–45
Rear HO2S circuit open/short inspection (heater) 01–40B–45

CONTROL SYSTEM COMPONENT LOCATION INDEX [L3 WITH TC]

E6U014018881W11

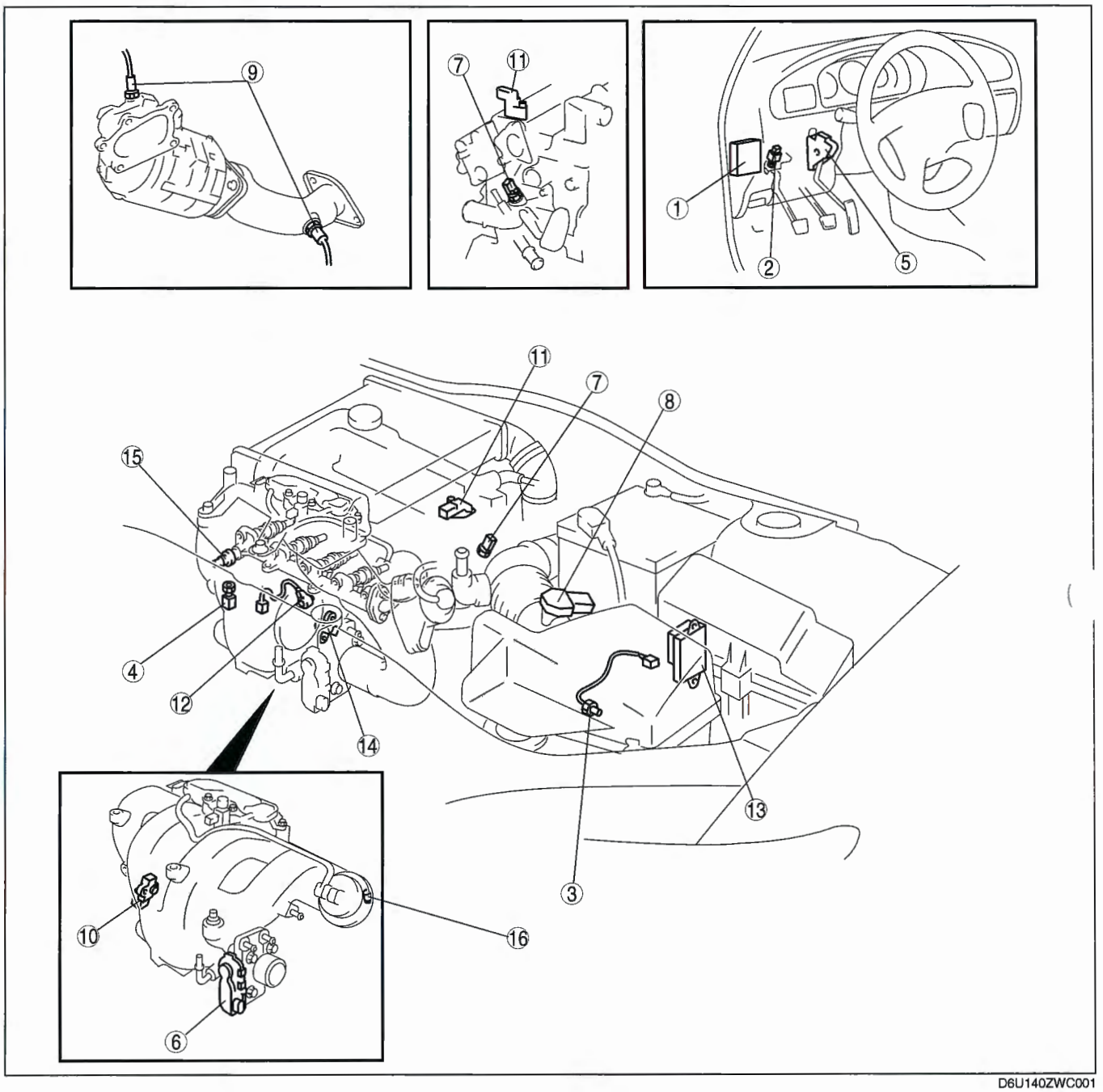

D6U140ZWC001

1	PCM/BARO sensor (See 01–40B–6 PCM REMOVAL/INSTALLATION [L3 WITH TC].) (See 01–40B–6 PCM INSPECTION [L3 WITH TC].) (See 01–40B–20 PCM CONFIGURATION [L3 WITH TC].) (See 01–40B–34 BAROMETRIC PRESSURE (BARO) SENSOR INSPECTION [L3 WITH TC].)
2	Clutch switch (See 01–40B–22 CLUTCH PEDAL POSITION (CPP) SWITCH INSPECTION [L3 WITH TC].)

3	Neutral switch (See 01–40B–23 NEUTRAL SWITCH INSPECTION [L3 WITH TC].)
4	PSP switch (See 01–40B–24 POWER STEERING PRESSURE (PSP) SWITCH INSPECTION [L3 WITH TC].)
5	APP sensor (See 01–40B–26 ACCELERATOR PEDAL POSITION (APP) SENSOR INSPECTION [L3 WITH TC].)

6	TP sensor and throttle actuator (See 01–40B–27 THROTTLE POSITION (TP) SENSOR INSPECTION [L3 WITH TC].) (See 01–13B–12 THROTTLE ACTUATOR INSPECTION [L3 WITH TC].) (See 01–13B–4 INTAKE AIR SYSTEM REMOVAL/INSTALLATION [L3 WITH TC].)
7	ECT sensor (See 01–40B–30 ENGINE COOLANT TEMPERATURE (ECT) SENSOR REMOVAL/INSTALLATION [L3 WITH TC].) (See 01–40B–30 ENGINE COOLANT TEMPERATURE (ECT) SENSOR INSPECTION [L3 WITH TC].)
8	MAF/IAT sensor (See 01–40B–33 INTAKE AIR TEMPERATURE (IAT) SENSOR INSPECTION [L3 WITH TC].) (See 01–40B–29 MASS AIR FLOW (MAF) SENSOR INSPECTION [L3 WITH TC].)
9	HO2S (See 01–40B–42 HEATED OXYGEN SENSOR (HO2S) INSPECTION [L3 WITH TC].)
10	MAP/boost air temperature sensor (See 01–40B–31 MANIFOLD ABSOLUTE PRESSURE (MAP) SENSOR/BOOST AIR TEMPERATURE SENSOR REMOVAL/INSTALLATION [L3 WITH TC].) (See 01–40B–31 MANIFOLD ABSOLUTE PRESSURE (MAP) SENSOR INSPECTION [L3 WITH TC].) (See 01–40B–32 BOOST AIR TEMPERATURE SENSOR INSPECTION [L3 WITH TC].)
11	CMP sensor (See 01–40B–38 CAMSHAFT POSITION (CMP) SENSOR REMOVAL/INSTALLATION [L3 WITH TC].) (See 01–40B–36 CAMSHAFT POSITION (CMP) SENSOR INSPECTION [L3 WITH TC].)
12	KS (See 01–40B–36 KNOCK SENSOR (KS) REMOVAL/INSTALLATION [L3 WITH TC].) (See 01–40B–35 KNOCK SENSOR (KS) INSPECTION [L3 WITH TC].)
13	Injector driver module (See 01–40B–21 INJECTOR DRIVER MODULE REMOVAL/INSTALLATION [L3 WITH TC].) (See 01–40B–21 INJECTOR DRIVER MODULE INSPECTION [L3 WITH TC].)
14	CKP sensor (See 01–40B–41 CRANKSHAFT POSITION (CKP) SENSOR REMOVAL/INSTALLATION [L3 WITH TC].) (See 01–40B–38 CRANKSHAFT POSITION (CKP) SENSOR INSPECTION [L3 WITH TC].)
15	Fuel pressure sensor (See 01–40B–34 FUEL PRESSURE SENSOR REMOVAL/INSTALLATION [L3 WITH TC].) (See 01–40B–34 FUEL PRESSURE SENSOR INSPECTION [L3 WITH TC].)
16	Variable swirl shutter valve switch (See 01–40B–25 VARIABLE SWIRL SHUTTER VALVE SWITCH INSPECTION [L3 WITH TC].)

CONTROL SYSTEM DIAGRAM [L3 WITH TC]

E6U014018881W12

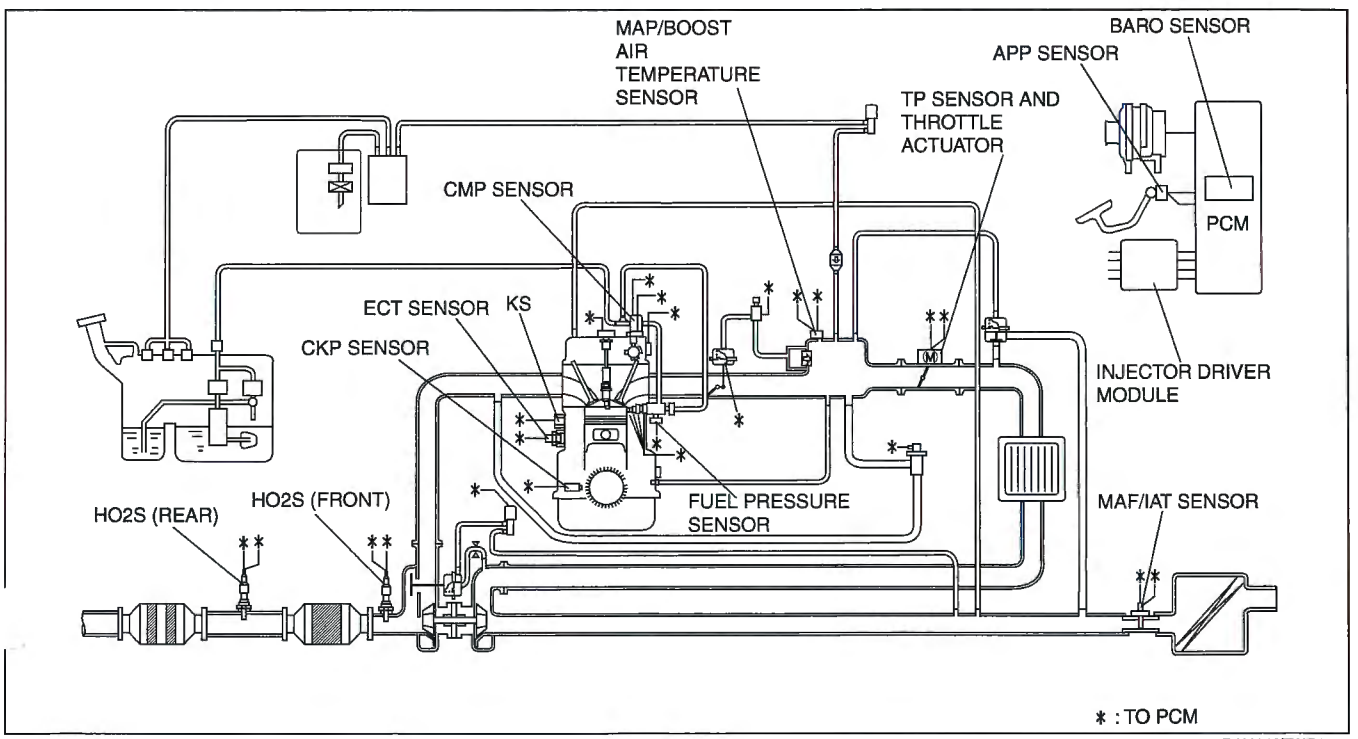

D6U140ZWC006

CONTROL SYSTEM WIRING DIAGRAM [L3 WITH TC]

E6U014018881W13

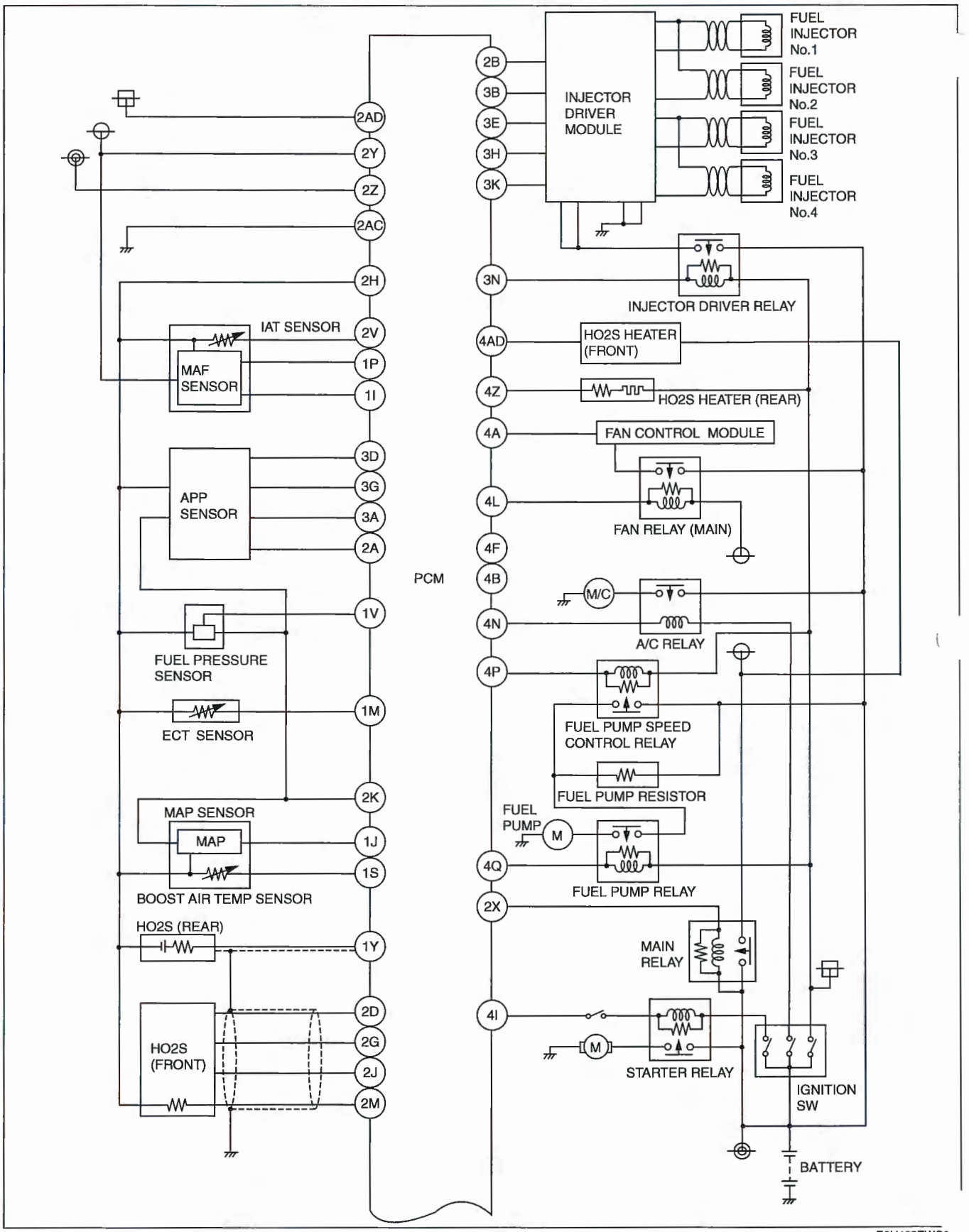

E6U103ZWC00

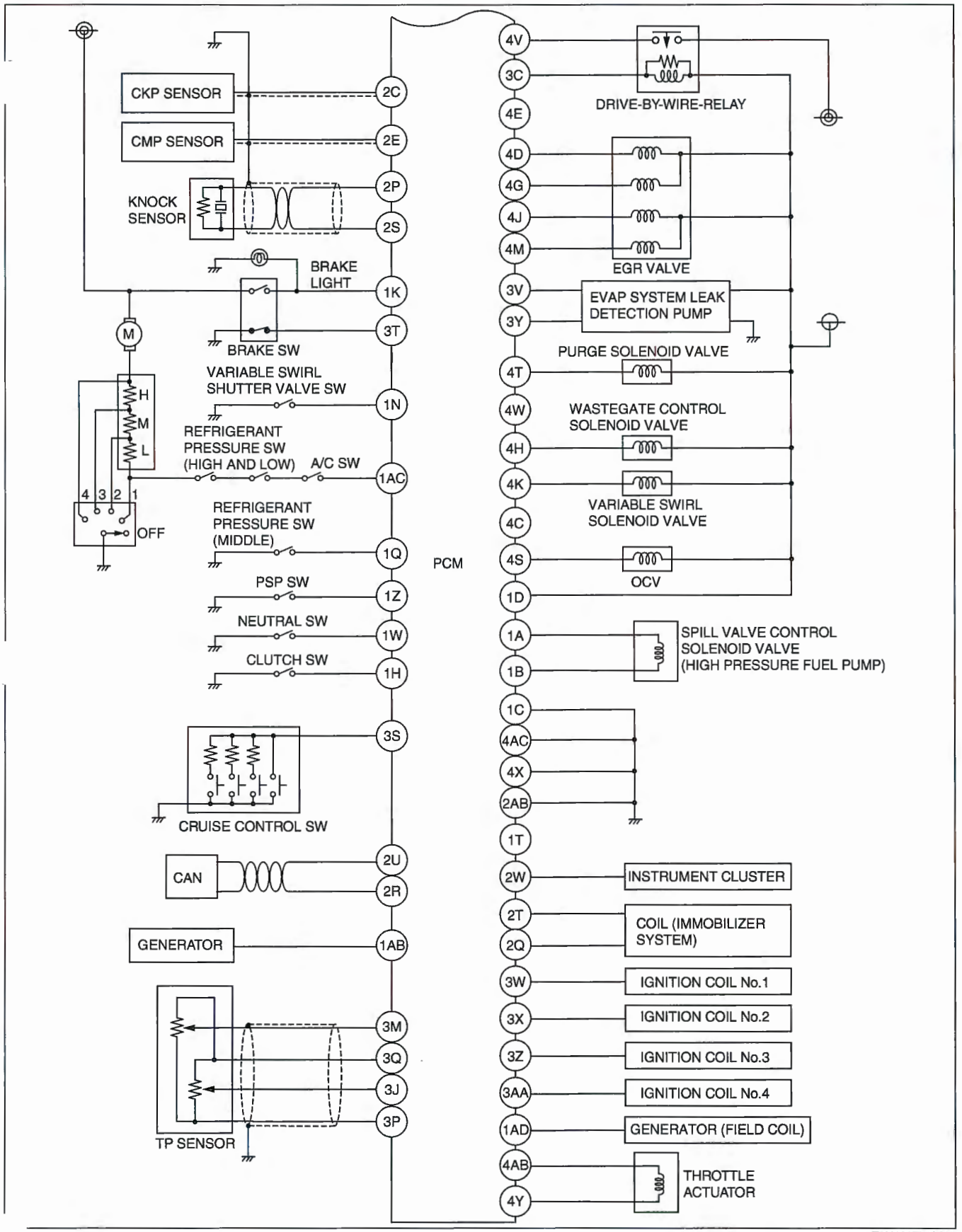

E6U103ZWC002

PCM REMOVAL/INSTALLATION [L3 WITH TC]

E6U014018880W11

Note
- For PCM replacement, set up the WDS and perform the PCM configuration. (See 01–40B–20 PCM CONFIGURATION [L3 WITH TC].)

1. Disconnect the negative battery cable.
2. Remove in the order indicated in the table.
3. Install in the reverse order of removal.

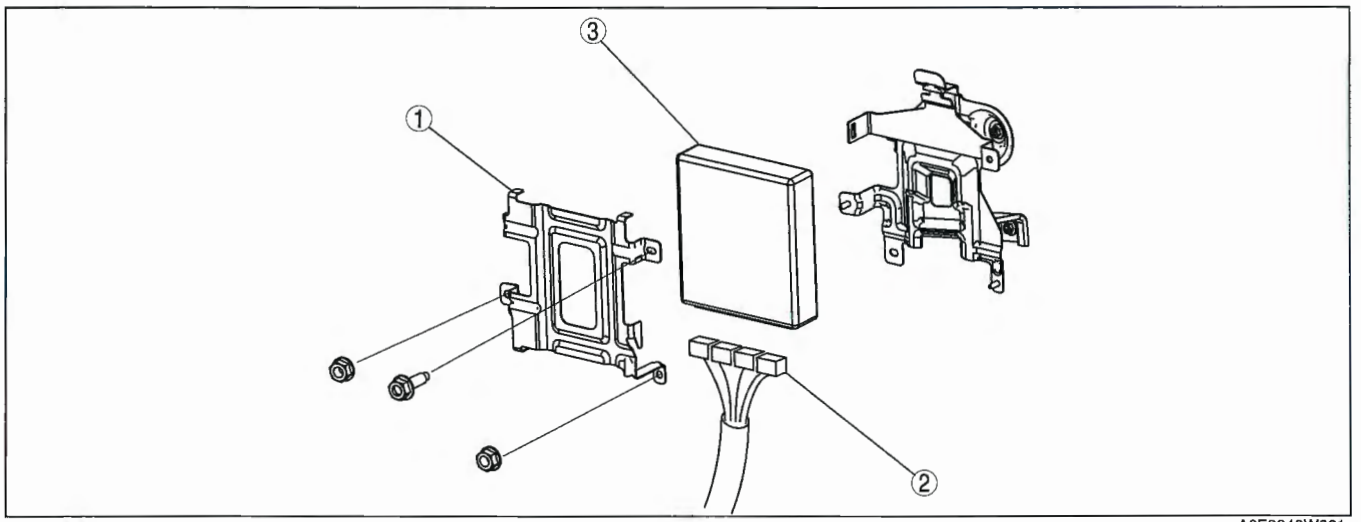

A6E3940W001

1	PCM cover
2	PCM connector
3	PCM

PCM INSPECTION [L3 WITH TC]

E6U014018880W12

Using the WDS or Equivalent

Note
- PIDs for the following parts are not available on this model. Perform the specific inspections for the following parts:
  - — CMP sensor (See 01–40B–36 CAMSHAFT POSITION (CMP) SENSOR INSPECTION [L3 WITH TC].)
  - — Main relay (See 09–21–7 RELAY INSPECTION.)

1. Connect the WDS or equivalent to the DLC-2.
2. Turn the ignition switch to the ON position.
3. Measure the PID value.
   - If PID value is not within the specification, follow the instructions in the "Inspection item" column.

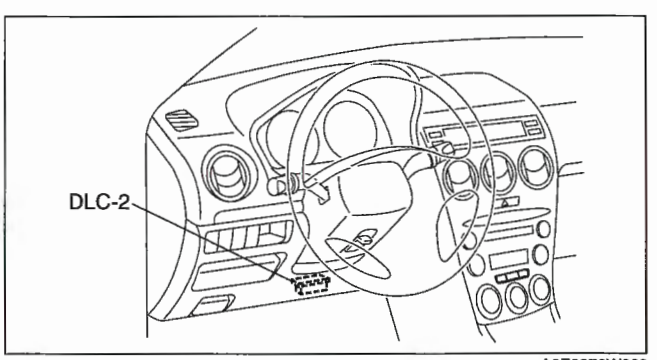

A6E3970W002

Note
- The PID/DATA MONITOR function monitors the calculated value of the input/output signals in the PCM. Therefore, an output device malfunction is not directly indicated as a malfunction of the monitored value for the output device. If a monitored value of an output device is out of specification, inspect the monitored value of the input device related to the output control.
- For input/output signals except those of the monitoring items, use a voltmeter to measure the PCM terminal voltage.
- The simulation items that are used in the ENGINE CONTROL SYSTEM OPERATION INSPECTION are as follows.
  - — ACCS, ALTF, ARPMDES, FAN_DUTY, EVAPCP, FP, FUELPW1, GENVDSD, HTR11, HTR12, IMRC, INJ_1, INJ_2, INJ_3, INJ_4, SEGRP, test, VT DUTY1, WGC

PID/DATA monitor table (reference)

Monitor item (Definition)	Unit/ Condition		Condition/Specification (Reference)	Inspection item	PCM terminal
T	°C	°F	Ignition switch at ON position: Indicate the ambient air temperature	• IAT sensor	2V
AC_REQ (A/C switch)	On/Off		A/C switch and fan switch ON at ignition switch ON: On A/C switch OFF at ignition switch ON: Off	• A/C switch	1AC
ACCS (A/C relay)	On/Off		Ignition switch ON: Off A/C switch ON and fan switch ON at idle: On	• The following PIDs: — RPM, TP, ECT, ACSW • A/C relay	4N
ALTF (Generator field coil control duty value)	%		Ignition switch ON: 0% Idle: 0—100% Just after A/C switch ON and fan switch ON at idle: Duty value rises	• The following PIDs: — IAT, ECT, RPM, VPWR, ALTT V • Generator	1AD
ALTT V (Generator output voltage)	V		Ignition switch ON: 0 V Idle: Approx. 14.5 V*1 (E/L not operating)	• Generator	1AB
AFR	—		Target air-oil ratio is displayed	• HO2S	1Y 2D 2G 2J
AFR_ACT	—		Actual air-oil ratio is displayed	• HO2S	1Y 2D 2G 2J
APP (Accelerator pedal position)	%		AP is released: 0% AP is depressed: 100%	• The following PIDs: — APP1, APP2 • Accelerator pedal position sensor	2A 3D
APP1 (Accelerator pedal position)	%		AP is released: 31.0—32.4% AP is depressed: 69.8—81.8%	• Accelerator pedal position sensor	3D
	V		AP is released: Approx. 1.6 V AP is depressed: Approx. 3.9 V		
APP2 (Accelerator pedal position)	%		AP is released: 20.2—21.4% AP is depressed: 58.8—70.8%	• Accelerator pedal position sensor	2A
	V		AP is released: Approx. 1.0 V AP is depressed: Approx. 3.4 V		
ARPMDES (Target engine speed)	RPM		No load: 700 rpm E/L operating: 700 rpm P/S operating: 700 rpm A/C ON: 750 rpm	• The following PIDs: — IAT, RPM, MAP, ECT, MAF, TP, INGEAR, ACSW, PSP, ALTT V • CKP sensor	—
B+ (Battery positive voltage)	V		Ignition switch ON: B+	• Main relay • Battery	2Y
BARO (Barometric pressure)	kPa, Bar, psi		Ignition switch ON: Indicate the atmospheric pressure	• BARO sensor	—
	V				
BAT	°C		Boost air temperature is displayed	• MAP/boost air temperature sensor	1S
BAT_V	V		Boost air temperature 20 °C {68 °F}: 2.4—2.6 V	• MAP/boost air temperature sensor	1S
			Boost air temperature 30 °C {86 °F}: 1.7—1.9 V		
BOO (Brake switch)	On/Off		Brake pedal depressed: On Brake pedal released: Off	• Brake switch	1K 3T
BPA (Brake pressure applied switch)	On/Off		Brake pedal depressed: On Brake pedal released: Off	• Brake switch	1K 3T
CATT11_DSD (Estimated catalytic converter temperature)	°C	°F	Indicate the estimated catalytic converter temperature	• Perform applicable DTC troubleshooting.	—
CHRGLP (Generator warning light)	On/Off		Ignition switch ON: On Idle: Off	• Perform applicable DTC troubleshooting.	—

Monitor item (Definition)	Unit/ Condition	Condition/Specification (Reference)	Inspection item	PCM terminal
COLP (Refrigerant pressure switch (middle))	ON/OFF	Refrigerant pressure switch (middle) ON*2 at idle: ON Refrigerant pressure switch (middle) OFF*3 at idle: OFF	• Refrigerant pressure switch	1Q
CPP (Clutch pedal position)	On/Off	Clutch pedal depressed: On Clutch pedal released: Off	• CPP switch	1H
CPP/PNP (Shift lever position)	Drive/ Neutral	Neutral position: Neutral Others: Drive	• Neutral switch	1W
DTCCNT (Number of DTC detected)	—	—	• Perform applicable DTC troubleshooting.	—
ECT (Engine coolant temperature)	°C | °F	Ignition switch at ON position: Indicate the ECT	• ECT sensor	1M
	V	ECT 20 °C {68 °F}: 3.04—3.14 V ECT 60 °C {140 °F}: 1.29—1.39 V		
EQ_RAT11 (Equivalence ratio (lambda))	—	Idling after warm-up: Approx. 1	• Perform applicable DTC troubleshooting.	2D 2G 2J
EQ_RAT11_DSD (Front oxygen sensor)	—	Idling after warm-up: Approx. 1	• Perform applicable DTC troubleshooting.	2D 2G 2J
ETC_ACT (Electronic throttle control actual)	°	Indicate the desired TP by angle	• Perform applicable DTC troubleshooting.	3J 3M
ETC_DSD (Electronic throttle control desired)	%	Indicate the desired TP by percent	• The following PIDs: — APP1, APP2, ETC_ACT • TP sensor	3J 3M
	°	Indicate the desired TP by angle		
EVAPCP (Purge solenoid valve duty value)	%	Ignition switch ON: 0% Idle: 0%	• The following PIDs: — IAT, RPM, ECT, MAF, O2S11,BARO, INGEAR, VPWR • Purge solenoid valve	4T
FAN_DUTY	%	ECT less than 98 °C {208 °F}: 0% ECT 100 °C {212 °F}: 30% ECT 106 °C {223 °F}: 70% ECT 110 °C {230 °F}: 100%	• Fan control module	4A
FIA (Fuel injection amount)	mg/cylinder	Indicate the fuel injection amount.	• Fuel injector • Injector driver module	—
FLI (Fuel level)	%	Fuel gauge level F: Approx. 100% Fuel gauge level E: Approx. 0%	• Perform applicable DTC troubleshooting.	—
FP (Fuel pump relay)	On/Off	Idle: On Cranking: On	• The following PIDs: — RPM • Fuel pump relay	4Q
FP_Hi_PRES	On/Off	Spill valve control solenoid valve work: On Spill valve control solenoid valve don't work: Off	• High pressure fuel pump	1A 1B
FUEL_PRES	Pa	Idle: Approx. 3 MPa Load 60 % or more: Approx. 11.5 MPa	• Fuel pressure sensor	1V
FUEL_PRES_V	V	Idle: Approx. 1.4 V	• Fuel pressure sensor	1V
FUELSYS (Fuel system status)	OL/CL/ OL-Drive/ OL-Fault/ CL-Fault	Ignition switch ON: OL_Drive Idle (after warm up): CL	• The following PIDs: — IAT, MAF, TP, MAP, ECT, RPM, O2S11, O2S12, INGEAR, PSP, ACSW, VPWR, ALTT V • Fuel injector	—
GENVDSD (Generator voltage desired)	V	Idle: Approx. 13.83 V*1 (E/L not operating)	• Perform applicable DTC troubleshooting.	—
HTR11 (HO2S heater (front))	On/Off	Idle (after warm up): On⇔Off	• The following PIDs: — IAT, MAF, TP, ECT, RPM, ACSW	4AD

Monitor item (Definition)	Unit/ Condition	Condition/Specification (Reference)	Inspection item	PCM terminal
TR12 O2S heater (rear))	On/Off	Idle: On Engine speed is above 4,000 rpm: Off	• The following PIDs: — IAT, MAF, ECT, RPM, ACSW	4Z
IAT (Intake air temperature)	°C / °F	Ignition switch at ON position: Indicate the IAT	• IAT sensor	2V
	V	IAT 20 °C {68 °F}: 2.4—2.6V IAT 30 °C {86 °F}: 1.7—1.9V		
IMRC (Variable swirl solenoid valve)	On/Off	Engine speed is below Approx. 3,750 rpm and ECT is below 60 °C {140 °F}: On Others: Off	• The following PIDs: — TP, ECT, RPM • Variable swirl solenoid valve	4K
INGEAR (Load/no load condition)	On/Off	CPP or CPP/PNP is On: Off Others: On	• Perform applicable DTC troubleshooting.	1H 1W
IVS (CTP condition)	Idle/ Off Idle	APP closed: Idle Others: Off Idle	• Perform applicable DTC troubleshooting.	3J 3M
KNOCKR (Knocking retard)	°	Ignition switch ON: 0 ° Idle: 0 °	• Knock sensor	2P 2S
LDP_EVAPCP (EVAP system leak detection pump detect incorrect purge flow)	mA	Indicate the EVAP control system incorrect purge flow detection value	• Perform applicable DTC troubleshooting.	—
LDP_IDL (EVAP system leak detection pump idle current)	mA	Indicate the EVAP system leak detection pump idle current	• Perform applicable DTC troubleshooting.	3V 3Y
LDP_MON (EVAP system leak detection pump monitoring current)	mA	Indicate the EVAP system leak detection pump monitoring current	• Perform applicable DTC troubleshooting.	3V 3Y
LDP_REF (EVAP system leak detection pump reference current)	mA	Indicate the EVAP system leak detection pump reference current	• Perform applicable DTC troubleshooting.	—
LDP_SLDV (EVAP system small leak detection value)	mA	Indicate the EVAP control system small leak detection value	• Perform applicable DTC troubleshooting.	3V 3Y
LDP_VSLDV (EVAP system small leak detection value)	mA/sec	Indicate the EVAP control system vary small leak detection value	• Perform applicable DTC troubleshooting.	3V 3Y
LOAD (Engine load)	%	Ignition switch ON: 0% Idle (after warm up): 17.1—18.5% Engine speed is 2,500 rpm: 14.2—15.2	• MAF sensor	—
LONGFT1 (long term fuel trim)	%	Idle (after warm up):–14—14%	• Perform applicable DTC troubleshooting.	—
MAF (Mass airflow)	g/s	Ignition switch ON: Approx. 0 g/s Idle (after warm up): 2.72—2.94 g/s Engine speed is 2,500 rpm: 8.00—8.66	• MAF sensor	1P
	V	Ignition switch ON: Approx. 0.7 V Idle (after warm up): 1.15—1.28 V		
MAP (Manifold absolute pressure)	kPa, Bar, psi	Ignition switch at ON position: Indicate the atmospheric pressure	• MAP sensor	1J
	V	Ignition switch ON Manifold absolute pressure Approx. 102 kPa: Approx. 1.9 V		
		Idle Manifold absolute pressure Approx. 30 kPa: Approx. 0.7 V		
MIL (Malfunction indicator lamp)	On/Off	Ignition switch ON: On Idle: Off	• Perform applicable DTC troubleshooting.	—

Monitor item (Definition)	Unit/ Condition	Condition/Specification (Reference)	Inspection item	PCM terminal
MIL_DIS (Traveled distance since the MIL illuminated)	km / mile	No DTC: 0 km {0 mile} DTC detected: Not 0 km {0 mile}	• Perform applicable DTC troubleshooting.	—
NUMKEYS (Number of keys stored in module)	—	Indicate the number of keys stored in module	—	—
O2S11 (Front oxygen sensor)	A	Idle (after warm up): –1.0—1.0 A Deceleration (after warm up): 0.25 A or more	• HO2S (front)	2D 2G 2J
O2S12 (Rear oxygen sensor)	V	Idle (after warm up): 0—1.0 V Acceleration (after warm up): 0.5—1.0 V Deceleration (after warm up): 0—0.5 V	• HO2S (rear)	1Y
PSP (Power steering pressure switch)	High/Low	Steering wheel in straight ahead position: Low Others: High	• PSP switch	1Z
RFCFLAG (Readness function code)	Learnt/ Not Learnt	Before running PCM adaptive memory procedure drive mode: Not Learnt After running PCM adaptive memory procedure drive mode: Learnt	• Run PCM adaptive memory procedure drive mode.	—
RO2FT1 (Rear oxygen sensor fuel trim)	—	• Idle after warm-up: Approx. 0.2	• The following PID — O2S12	1Y
RPM (Engine speed)	RPM	No load: 650—750 rpm E/L operating: 650—750 rpm P/S operating: 650—750 rpm A/C ON: 700—800 rpm	• CKP sensor	2C
SCCS (Speed control command switch)	V	Press ON/OFF: Approx. 0 V Press CANCEL: Approx. 1.2 V Press SET/COAST: Approx. 3.2 V Press RES/ACCEL: Approx. 4.2 V Others: Approx. 5.0 V	• Cruise control switch	—
SEGRP (EGR valve (stepping motor) position)	No. of step	Idle: 0 step Cranking: 0—60 steps	• The following PIDs: — MAF, TP, ECT, RPM, VSS • EGR valve	—
SEGRP DSD (Desired EGR valve (stepping motor) position)	%	Idle: 0%	• The following PIDs: — MAF, TP, ECT, RPM, VSS	—
SELTESTDTC (DTC of KOEO/KOER self-test)	—	—	• Perform applicable DTC troubleshooting.	—
SHRTFT1 (Short term fuel trim [front HO2S])	%	Idle (after warm up): Approx.–30—25%	• Perform applicable DTC troubleshooting.	—
SHRTFT12 (Short term fuel trim)	%	Idle (after warm up): Approx.–30—25%	• Perform applicable DTC troubleshooting.	—
SPARKADV (Ignition timing)	°(BTDC)	Idle: BTDC Approx. 8°	• The following PIDs: — MAF, TP, ECT, RPM, INGEAR, PSP, ACSW, VPWR • Ignition timing	—
test (Test mode)	On/Off	—	—	—
TIRESIZE (Tire revolution per mile)	rev/mile	Indicate the tire circumference length	—	—
TP REL (Relative TP)	%	Ignition switch ON APP is released: Approx. 5% APP is depressed: Approx. 46 %	• TP sensor	3J 3M

Monitor item (Definition)	Unit/ Condition	Condition/Specification (Reference)	Inspection item	PCM terminal
TP1 (TP sensor 1)	%	Ignition switch ON APP is released: Approx. 15% APP is depressed: Approx. 55 %	• TP sensor	3M
	V	Ignition switch ON APP is released: 0.4—0.6 V APP is depressed: 4.25—4.75 V		
TP2 (TP sensor 2)	%	Ignition switch ON APP is released: Approx. 15% APP is depressed: Approx. 56%	• TP sensor	3J
	V	Ignition switch ON APP is released: 4.4—4.6 V APP is depressed: 0.25—0.75 V		
TPCT (Lowest closed throttle voltage)	V	Indicate the voltage of the closed TP sensor	• TP sensor	3J 3M
VSS (Vehicle speed)	KPH / MPH	Indicate the vehicle speed	• Perform applicable DTC troubleshooting.	—
VT ACT1 (Actual valve timing)	°	Idle: Approx. 0°	• The following PIDs: — TP, ECT, RPM • OCV	—
VT DIFF1 (Difference between actual valve timing and target valve timing)	°	Idle: Approx. 0°	• The following PIDs: — TP, ECT, RPM • OCV	4S
VT DUTY1	%	Idle: Approx. 11.5%	• The following PIDs: — TP, ECT, RPM • OCV	4S
TC	On/Off	Variable swirl shutter valve switch ON: On	• Variable swirl shutter valve switch	1N
		Variable swirl shutter valve switch OFF: Off		
WGC	%	Racing with the accelerator pedal fully depressed: 10—100 %	• Wastegate control solenoid valve	4H
		Fully closed: 0 %		

*1 : Calculated value; differs from terminal voltage
*2 : Refrigerant pressure switch (middle) turns off when the refrigerant pressure is 1.26—1.49 MPa {12.9—15.1 kgf/cm^6, 184—214 psi}
*3 : Refrigerant pressure switch (middle) turns on when the refrigerant pressure is 1.69—1.84 MPa {17.3—18.7 kgf/cm^2, 247—265 psi}

Without Using the SST

Caution
- **The PCM terminal voltages vary with change in measuring conditions and vehicle conditions. Always carry out a total inspection of the input systems, output systems, and PCM to determine the cause of trouble. Otherwise, a wrong diagnosis will be made.**

1. Measure the voltage at each terminal.
   - If any incorrect voltage is detected, inspect the related system(s), wiring harnesses and connector(s) referring to the Action column in the terminal voltage table.

Terminal voltage table (Reference)

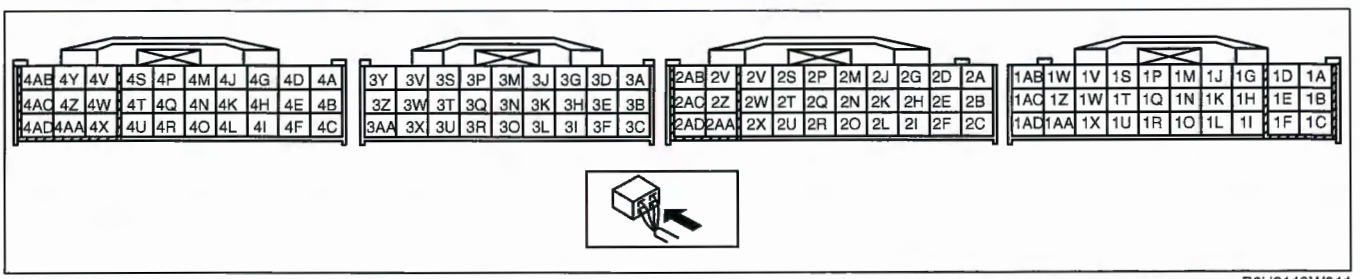

B6U0140W011

Terminal	Signal	Connected to	Test condition		Voltage (V)	Inspection item
1A	High pressure fuel pump control (+)	High pressure fuel pump	Ignition switch OFF		Approx. 10.0	• High pressure fuel pump • Related wiring harness Related wiring harness
			Ignition switch ON		Approx. 9.6	
			Idle		Approx. 9.4	
1B	High pressure fuel pump control (–)	High pressure fuel pump	Ignition switch OFF		Approx. 9.9	• High pressure fuel pump • Related wiring harness Related wiring harness
			Ignition switch ON		Approx. 9.7	
			Idle		Approx. 9.1	
1C	GND	Body ground	Under any condition		Below 1.0	• Related wiring harness
1D	Variable swirl solenoid valve power supply	Main relay	Ignition switch OFF after 90s		Bellow 1.0	• Main relay • Related wiring harness
			Ignition switch ON		B+	
1E	—	—	—		—	—
1F	—	—	—		—	—
1G	—	—	—		—	—
1H	Clutch operation	Clutch switch	Clutch pedal depressed		Below 1.0	• Clutch switch • Related wiring harness
			Clutch pedal released		B+	
1I	MAF sensor GND	MAF/IAT sensor	Under any condition		Below 1.0	• MAF/IAT sensor • Related wiring harness
1J	Manifold absolute pressure	MAP sensor	Ignition switch ON (Engine off) at sea level		Approx. 1.9	• MAP sensor • Related wiring harness
			Idle		Approx. 0.7	
1K	Brake (No. 1)	Brake switch No. 1	Brake pedal depressed		B+	• Brake switch • Related wiring harness
			Brake pedal released		Below 1.0	
1L	—	—	—		—	—
1M	ECT	ECT sensor	Ignition switch ON	ECT 20 °C {68 °F}	3.04—3.14	• ECT sensor • Related wiring harness
				ECT 60 °C {140 °F}	1.29—1.39	

Terminal	Signal	Connected to	Test condition		Voltage (V)	Inspection item
1N	Variable swirl shutter valve monitor	Variable swirl shutter valve switch	Racing (variable swirl shutter valve close)		Below 1.0	• Variable swirl shutter valve switch • Related wiring harness
			Idle (variable swirl shutter valve open)		Approx. 5.0	
1O	—	—	—		—	—
1P	MAF	MAF sensor	Ignition switch ON		Approx. 0.7	• MAF sensor • Related wiring harness
			Idle (after warm up)		1.15—1.28	
1Q	A/C compressor load	Refrigerant pressure switch (middle)	A/C ON	Refrigerant pressure is above 1.52 MPa {15.5 kgf/cm^2, 220 psi}	Below 1.0	• Refrigerant pressure switch • Related wiring harness
				Refrigerant pressure is below 1.23 MPa {12.5 kgf/cm^2, 178 psi}	B+	
1R	—	—	—		—	—
1S	Boost air temperature	MAP/Boost air temperature sensor	Ignition switch ON	IAT 20 °C {68 °F}	2.4—2.6	• Boost air temperature sensor • Related wiring harness
				IAT 30 °C {86 °F}	1.7—1.9	
1T	—	—	—		—	—
1U	—	—	—		—	—
1V	Fuel pressure sensor	Fuel pressure sensor	Ignition switch OFF		Approx. 1.4	• Fuel pressure sensor • Related wiring harness
			Ignition switch ON		Approx. 1.5	
			Idle		Approx. 1.4	
1W	Neutral position	Neutral switch	Shift lever is at neutral position		Below 1.0	• Neutral switch • Related wiring harness
			Shift lever is not at neutral position		B+	
1X	—	—	—		—	—
1Y	HO2S (rear)	HO2S (rear)	Ignition switch ON		Below 1.0	• HO2S (rear) • Related wiring harness
			Voltage changes between 0 and 1 according to the amount of racing			
1Z	PSP	PSP switch	Idle	Steering wheel at straight ahead position	B+	• PSP switch • Power steering system • Related wiring harness
				While turning steering wheel	Below 1.0	
1AA	—	—	—		—	—
1AB	Generator output voltage	Generator (terminal P)	• Inspect using the wave profile. (See 01–40B–18 Inspection Using An Oscilloscope (Reference).)			• Generator • Related wiring harness
1AC	A/C operation	Refrigerant pressure switch (high, low)	Idle	A/C switch and fan switch on	Below 1.0	• Refrigerant pressure switch • Related wiring harness
				A/C switch off	B+	
1AD	Generator field coil control	Generator (terminal D)	• Inspect using the wave profile. (See 01–40B–18 Inspection Using An Oscilloscope (Reference).)			• Following PIDs: IAT, ECT, RPM, VPWR, ALTT V. • Generator • Related wiring harness

Terminal	Signal	Connected to	Test condition		Voltage (V)	Inspection item
2A	APP position (No. 2)	APP sensor No. 2	Ignition switch ON	APP is released	Approx. 1.0	• APP sensor • Related wiring harness
				APP is depressed	Approx. 3.4	
2B	Fuel injector check signal	Injector driver module	• Inspect using the wave profile. (See 01–40B–18 Inspection Using An Oscilloscope (Reference).)			• Injector driver module • Related wiring harness
2C	CKP	CKP sensor	• Inspect using the wave profile. (See 01–40B–18 Inspection Using An Oscilloscope (Reference).)			• CKP sensor • Related wiring harness
2D	HO2S (front) IP+	HO2S (front)	Idle (after warm up)		Approx. 3.7—3.9	• HO2S (front) • Related wiring harness
			When the engine speed is increased, the voltage increased.			
2E	CMP	CMP sensor	• Inspect using the wave profile. (See 01–40B–18 Inspection Using An Oscilloscope (Reference).)			• CMP sensor • Related wiring harness
2F	—	—	—		—	—
2G	HO2S (front) VSIP	HO2S (front)	Idle (after warm up)		Approx. 4.0	• HO2S (front) • Related wiring harness
2H	Sensor GND	MAF/IAT sensor, HO2S (front, rear), APP sensor, CKP sensor, CMP sensor, Fuel pressure sensor, ECT sensor, MAP sensor, purge solenoid valve	Under any condition		Below 1.0	• Related wiring harness
2I	—	—	—		—	—
2J	HO2S (front) power supply	HO2S (front)	Idle (after warm up)		Approx. 4.1	• HO2S (front) • Related wiring harness
2K	Constant voltage (Vref)	MAP sensor, fuel pressure sensor, APP sensor	Ignition switch ON		Approx. 5.0	• Related wiring harness
2L	—	—	—		—	—
2M	HO2S (front) calibration resistor	HO2S (front)	Ignition switch OFF after 90s		Approx. 0	• HO2S (front) • Related wiring harness
			Ignition switch ON		Approx. 1.7	
2N	—	—	—		—	—
2O	—	—	—		—	—
2P	Knocking (–)	Knock sensor	Ignition switch ON (Use digital type voltmeter, because measurement voltage will be detected less than true voltage when using analog type voltmeter)		Below 1.0	• Perform "On-Board Diagnostic Test" • Related wiring harness
2Q	Coil (Immobilizer system)	Coil	Because this terminal is for communication, good/no good judgment by terminal voltage is not possible.			• Coil • Related wiring harness
2R	CAN (low)	Instrument cluster, DSC HU/CM	Because this terminal is for CAN, good/no good judgment by terminal voltage is not possible.			• Related wiring harness
2S	Knocking (+)	Knock sensor	Ignition switch ON (Use digital type voltmeter, because measurement voltage will be detected less than true voltage when using analog type voltmeter)		Approx. 4.3	• Perform "On-Board Diagnostic Test" • Related wiring harness

Terminal	Signal	Connected to	Test condition		Voltage (V)	Inspection item
2T	Coil (Immobilizer system)	Coil	Because this terminal is for communication, good/no good judgment by terminal voltage is not possible.			• Coil • Related wiring harness
2U	CAN (high)	Instrument cluster, DSC HU/CM	Because this terminal is for CAN, good/no good judgment by terminal voltage is not possible.			• Related wiring harness
2V	IAT	MAF/IAT sensor	Ignition switch ON	IAT 20 °C {68 °F}	2.4—2.6	• IAT sensor • Related wiring harness
				IAT 30 °C {86 °F}	1.7—1.9	
2W	Security light control	Instrument cluster (Security light)	Security light illuminate		Approx. 3.1	• Related wiring harness
			Others		B+	
2X	Main relay control	Main relay	Ignition switch OFF after 90s		B+	• Main relay • Related wiring harness
			Ignition switch ON		Approx. 0.8	
2Y	B+	Main relay	Ignition switch OFF		Below 1.0	• Battery • Related wiring harness
			Ignition switch ON		B+	
2Z	Back-up power supply	Battery (positive terminal)	Under any condition		B+	• Battery • Related wiring harness
2AA	—	—	—		—	—
2AB	GND	Body ground	Under any condition		Below 1.0	• Related wiring harness
2AC	GND	Body ground	Under any condition		Below 1.0	• Related wiring harness
2AD	Ignition switch (IG1)	Ignition switch	Ignition switch OFF		Below 1.0	• Ignition switch • Related wiring harness
			Ignition switch ON		B+	
3A	APP sensor GND	APP sensor	Under any condition		Below 1.0	• Related wiring harness
3B	Fuel injection (#1)	Fuel injector No.1	• Inspect using the wave profile. (See 01–40B–18 Inspection Using An Oscilloscope (Reference).)			• Fuel injector No.1 • Related wiring harness
3C	Drive-by-wire-relay	Drive-by-wire-relay	Ignition switch OFF		Below 1.0	• Drive-by-wire-relay • Related wiring harness
			Ignition switch ON		Below 1.0	
3D	APP position (No. 1)	APP sensor No. 1	Ignition switch ON	APP is released	Approx. 1.6	• APP sensor • Related wiring harness
				APP is depressed	Approx. 3.9	
3E	Fuel injection (#2)	Fuel injector No.2	• Inspect using the wave profile. (See 01–40B–18 Inspection Using An Oscilloscope (Reference).)			• Fuel injector No.2 • Related wiring harness
3F	—	—	—		—	—
3G	APP sensor 1 power	APP sensor	Under any condition		Approx. 5.0	• APP sensor • Related wiring harness
3H	Fuel injection (#3)	Fuel injector No.3	• Inspect using the wave profile. (See 01–40B–18 Inspection Using An Oscilloscope (Reference).)			• Fuel injector No.3 • Related wiring harness
3I	—	—	—		—	—
3J	TP position (No. 2)	TP sensor No. 2	Ignition switch ON	APP is released	4.4—4.6	• TP sensor • Related wiring harness
				APP is depressed	0.25—0.75	
3K	Fuel injection (#4)	Fuel injector No.4	• Inspect using the wave profile. (See 01–40B–18 Inspection Using An Oscilloscope (Reference).)			• Fuel injector No.4 • Related wiring harness
3L	—	—	—		—	—

Terminal	Signal	Connected to	Test condition		Voltage (V)	Inspection item
3M	TP position (No. 1)	TP sensor No. 1	Ignition switch ON	APP is released	0.4—0.6	• TP sensor • Related wiring harness
				APP is depressed	4.25—4.75	
3N	Injector control	Injector driver relay	Under any condition		Below 1.0	• Related wiring harness
3O	—	—	—		—	—
3P	Constant voltage (Vref)	TP sensor	Under any condition		Approx. 5.0	• TP sensor • Related wiring harness
3Q	TP sensor GND	TP sensor	under any condition		Below 1.0	• TP sensor • Related wiring harness
3R	—	—	—		—	—
3S	Cruise control	Cruise control switch	Ignition switch ON	Depressing ON/OFF	Approx. 0	• Cruise control switch • Related wiring harness
				Depressing CANCEL	Approx. 1.2	
				Depressing SET/COAST	Approx. 3.2	
				Depressing RES/ACCEL	Approx. 4.2	
				Others	Approx. 5.0	
3T	Brake (No. 2)	Brake switch No. 2	Brake pedal depressed		B+	• Brake switch • Related wiring harness
			Brake pedal released		Below 1.0	
3U	—	—	—		—	—
3V	EVAP system leak detection pump (solenoid)	EVAP system leak detection pump	Ignition switch ON		B+	• EVAP system leak detection pump • Related wiring harness
			Idle		B+	
3W	IGT1	Ignition coil (No.1 cylinders)	• Inspect using the wave profile. (See 01–40B–18 Inspection Using An Oscilloscope (Reference).)			• Ignition coil • Related wiring harness
3X	IGT2	Ignition coil (No.2 cylinders)	• Inspect using the wave profile. (See 01–40B–18 Inspection Using An Oscilloscope (Reference).)			• Ignition coil • Related wiring harness
3Y	EVAP system leak detection pump (pump)	EVAP system leak detection pump	Ignition switch ON		B+	• EVAP system leak detection pump • Related wiring harness
			Idle		B+	
3Z	IGT3	Ignition coil (No.3 cylinders)	• Inspect using the wave profile. (See 01–40B–18 Inspection Using An Oscilloscope (Reference).)			• Ignition coil • Related wiring harness
3AA	IGT4	Ignition coil (No.4 cylinders)	• Inspect using the wave profile. (See 01–40B–18 Inspection Using An Oscilloscope (Reference).)			• Ignition coil • Related wiring harness
4A	Fun control module	Control module unit	Fun not operate		Approx. 0.5	• Fun control module • Related wiring harness
			Operation		Approx. 2.5	
4B	—	—	—		—	—
4C	—	—	—		—	—
4D	EGR valve #1 coil control	EGR valve (terminal E)	Ignition switch ON		Below 1.0	• EGR valve • Related wiring harness
			Idle		Below 1.0	
4E	—	—	—		—	—
4F	—	—	—		—	—
4G	EGR valve #3 coil control	EGR valve (terminal A)	Ignition switch ON		B+	• EGR valve • Related wiring harness
			Ignition switch OFF after 90s		Below 1.0	

Terminal	Signal	Connected to	Test condition	Voltage (V)	Inspection item
4H	Wastegate control solenoid valve	Wastegate control solenoid valve	Idle	B+	• Wastegate control solenoid valve • Related wiring harness
			When the turbocharger works	Approx. 0.3	
4I	Starter relay control	Starter relay	Ignition switch OFF	B+	• Perform "On-Board Diagnostic Test" • Related wiring harness
			Ignition switch ON	Below 1.0	
4J	EGR valve #4 coil control	EGR valve (terminal B)	Ignition switch ON	B+	• EGR valve • Related wiring harness
			Ignition switch OFF after 90s	Below 1.0	
4K	Variable swirl control	Variable swirl solenoid valve	Racing (variable swirl shutter valve close)	Below 1.0	• Variable swirl solenoid valve • Related wiring harness
			Idle (variable swirl shutter valve open)	B+	
4L	—	—	—	—	—
4M	EGR valve #6 coil control	EGR valve (terminal F)	Ignition switch ON	B+	• EGR valve • Related wiring harness
			Idle after 2s	B+	
4N	A/C	A/C relay	A/C operating	Below 1.0	• A/C relay • Related wiring harness
			A/C not operating	B+	
4O	—	—	—	—	—
4P	Fuel pump speed control relay	Fuel pump speed control relay	Relay is OFF	B+	• Fuel pump relay • Related wiring harness
			Relay is ON	Below 1.0	
4Q	Fuel pump relay	Fuel pump relay	Ignition switch ON after 1s	B+	• Fuel pump speed control relay • Related wiring harness
			Cranking	Below 1.0	
			Idle	Below 1.0	
4R	—	—	—	—	—
4S	OCV control	OCV	• Inspect using the wave profile. (See 01–40B–18 Inspection Using An Oscilloscope (Reference).)		• OCV • Related wiring harness
4T	Purge solenoid valve	Purge solenoid valve	• Inspect using the wave profile. (See 01–40B–18 Inspection Using An Oscilloscope (Reference).)		• Purge solenoid valve • Related wiring harness
4U	—	—	—	—	—
4V	Throttle valve power	Drive-by-wire-relay	Ignition switch OFF after 90s	Below 1.0	• Throttle relay • Related wiring harness
			Ignition switch ON	B+	
4W	—	—	—	—	—
4X	GND	GND	Under any condition	Below 1.0	• Related wiring harness
4Y	Throttle actuator control (+)	Throttle body	Ignition switch OFF	B+	• Throttle actuator • Related wiring harness
			Ignition switch ON	Approx. 1.5	
4Z	HO2S (rear) heater control	HO2S (rear) heater	Engine speed below 4,000 rpm	Approx. 0.2	• HO2S (rear) heater • Related wiring harness
			Engine speed above 4,000 rpm and TP angle above 50%	B+	
4AA	—	—	—	—	—
4AB	Throttle actuator control (–)	Throttle body	Ignition switch ON	B+	• Throttle actuator • Related wiring harness
			Ignition switch OFF	Approx. 1.5	
4AC	GND	Body ground	Under any condition	Below 1.0	• Related wiring harness
4AD	HO2S (front) heater control	HO2S (front) heater	• Inspect using the wave profile. (See 01–40B–18 Inspection Using An Oscilloscope (Reference).)		• HO2S (front) • Related wiring harness

Inspection Using An Oscilloscope (Reference)

Generator output voltage signal

PCM terminals
- 1AB(+)—Body ground(–)

Oscilloscope setting
- 2 V/DIV (Y), 2 ms/DIV (X), DC range

Vehicle condition
- Idle after warm up (no load, P/S off, A/C off)

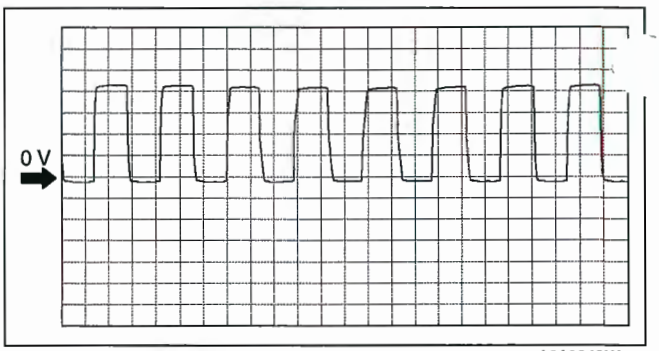

A6A3940W004

Generator field coil control signal

PCM terminals
- 1AD(+)—Body ground(–)

Oscilloscope setting
- 0.5 V/DIV (Y), 1 ms/DIV (X), DC range

Vehicle condition
- Idle after warm up (no load, P/S off, A/C off)

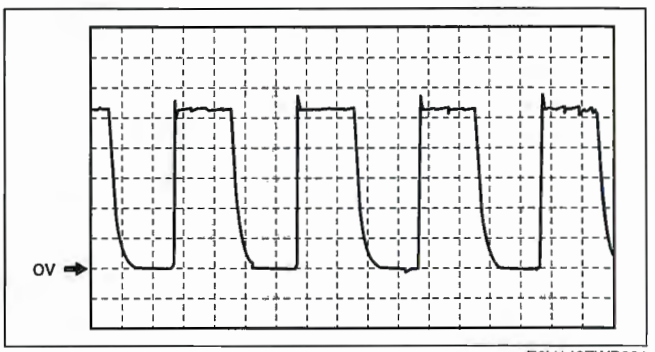

E6U140ZWB001

Fuel injector check signal

PCM terminals
- 2B(+)—Body ground(–)

Oscilloscope setting
- 2 V/DIV (Y), 10 ms/DIV (X), DC range

Vehicle condition
- Idle after warm up (no load, P/S off, A/C off)

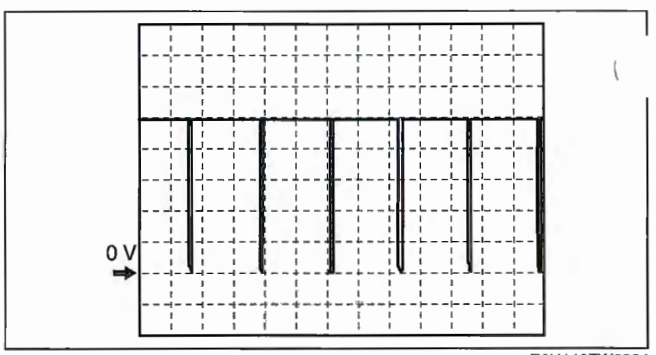

E6U140ZW6304

CKP sensor signal

PCM terminals
- 2C(+)—Body ground(–)

Oscilloscope setting
- 2 V/DIV (Y), 5 ms/DIV (X), DC range

Vehicle condition
- Idle after warm up (no load, P/S off, A/C off)

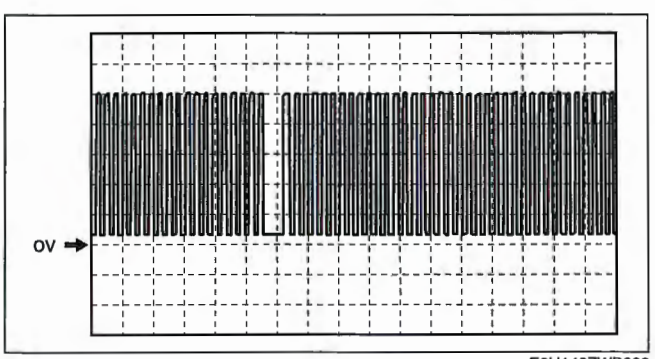

E6U140ZWB003

CMP sensor signal

PCM terminals
- 2E(+)—Body ground(–)

Oscilloscope setting
- 2 V/DIV (Y), 50 ms/DIV (X), DC range

Vehicle condition
- Idle after warm up (no load, P/S off, A/C off)

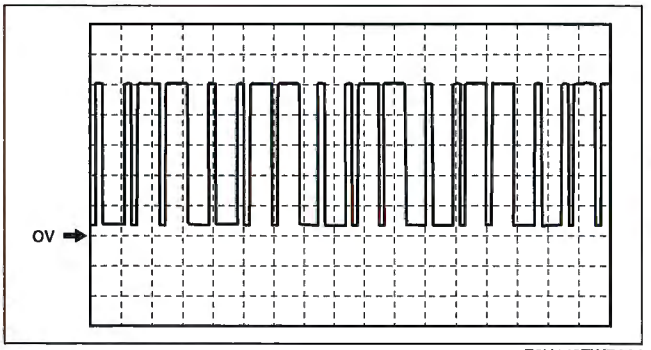

E6U140ZWB004

Fuel injection control

PCM terminals
- Fuel Injection No.1: 3B(+)—Body ground(–)
- Fuel Injection No.2: 3E(+)—Body ground(–)
- Fuel Injection No.3: 3H(+)—Body ground(–)
- Fuel Injection No.4: 3K(+)—Body ground(–)

Oscilloscope setting
- 2 V/DIV (Y), 20 ms/DIV (X), DC range

Vehicle condition
- Idle after warm up (no load, P/S off, A/C off)

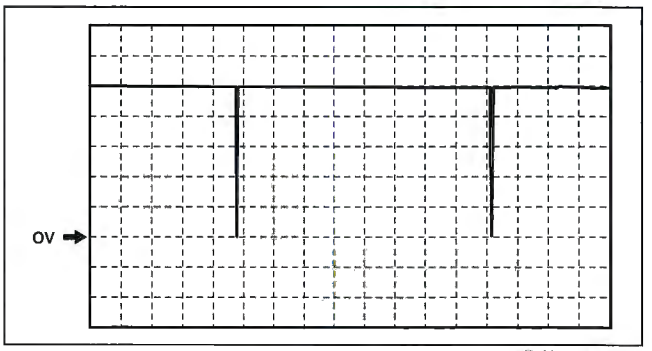

E6U140ZWB005

IGT control signals

PCM terminals
- IGT1(No.1): 3W(+)—Body ground(–)
- IGT2(No.2): 3X(+)—Body ground(–)
- IGT3(No.3): 3Z(+)—Body ground(–)
- IGT4(No.4): 3AA(+)—Body ground(–)

Oscilloscope setting
- 2 V/DIV (Y), 20 ms/DIV (X), DC range

Vehicle condition
- Idle after warm up (no load, P/S off, A/C off)

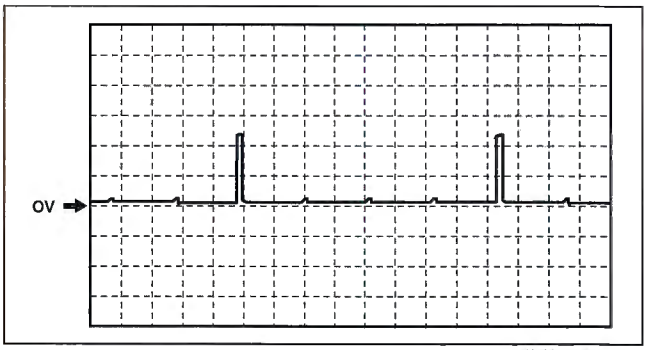

E6U140ZWB006

OCV control signal

PCM terminals
- 4S(+)—Body ground(–)

Oscilloscope setting
- 2.5 V/DIV (Y), 1 ms/DIV (X), DC range

Vehicle condition
- Idle after warm up (no load, P/S off, A/C off)

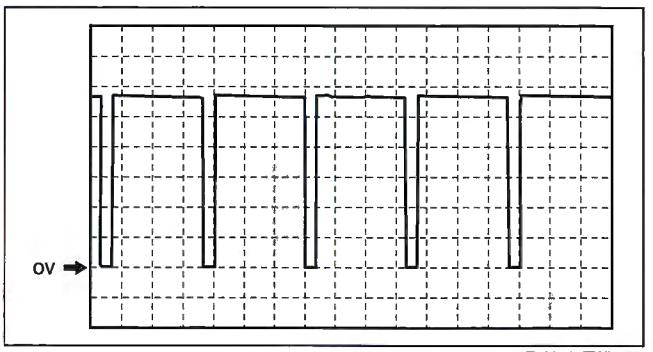

E6U140ZWB008

Purge control signal

PCM terminals

- 4T(+)—Body ground(–)

Oscilloscope setting

- 2 V/DIV (Y), 10 ms/DIV (X), DC range

Vehicle condition

- Idle after warm up (no load, P/S off, A/C off)

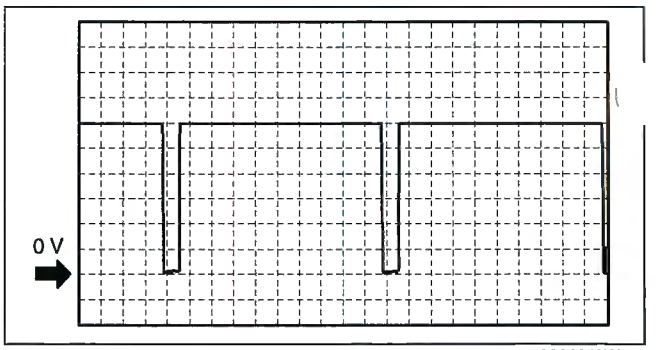

A6A3940W023

HO2S (front) heater control signal

PCM terminals

- 4AD(+)—Body ground(–)

Oscilloscope setting

- 2.5 V/DIV (Y), 20 ms/DIV (X), DC range

Vehicle condition

- Idle after engine start (no load, P/S off, A/C off)

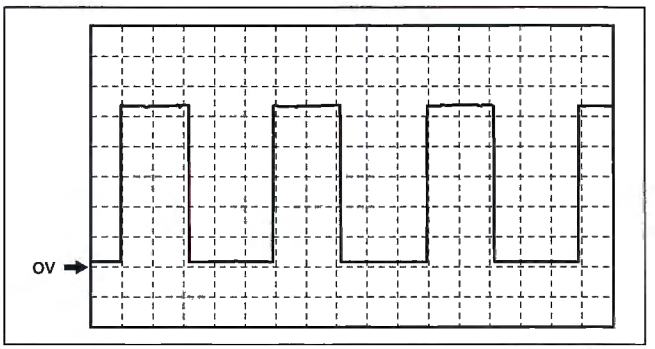

E6U140ZWB007

PCM CONFIGURATION [L3 WITH TC]

1. Connect the WDS or equivalent to the DLC-2.
2. Perform the vehicle identification procedure.
3. Select "toolbox" and "Module Programming".
4. Select "Programmable Module Installation".
5. Select "PCM" and perform procedures according to directions.

Note

- If the PCM is replaced with a new one without performing "Programmable Module Installation" procedure, the PCM will be set DTC P0602 and illuminates the MIL. This is because the configuration data is not programmed in the PCM.

E6U014018880W13

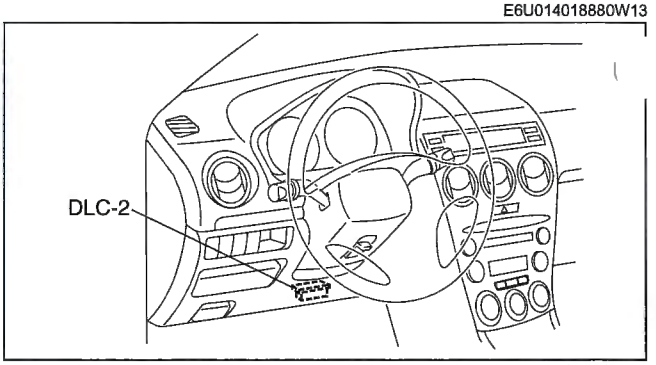

A6E3970W002

6. Retrieve DTCs with the WDS or equivalent, erase them, and verify that there are no DTCs present and the MIL is off.
   - If DTCs are still present, perform applicable DTC inspection.

INJECTOR DRIVER MODULE REMOVAL/INSTALLATION [L3 WITH TC]

E6U014018701W01

1. Disconnect the negative battery cable.
2. Remove the battery and the battery tray.
   Remove in the order indicated in the table.
   .. Install in the reverse order of removal.

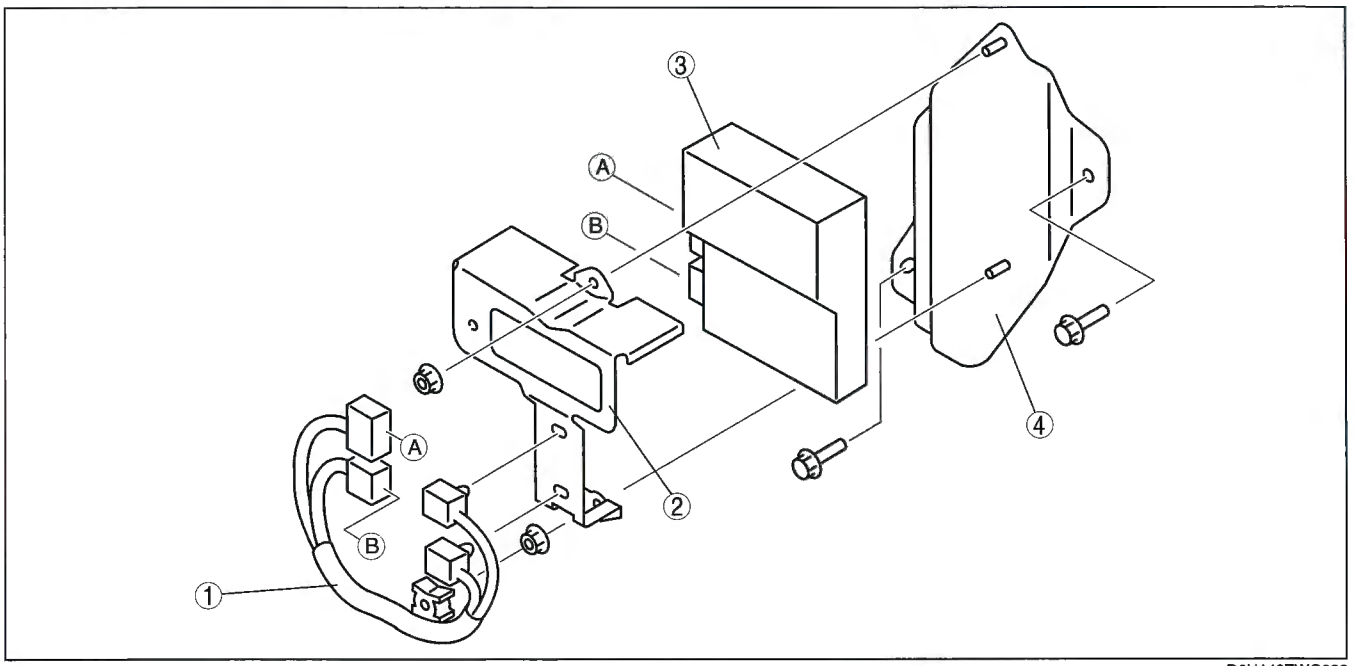

D6U140ZWC022

1	Wiring harness	3	Injector driver module
2	Connector bracket	4	Injector driver module bracket

INJECTOR DRIVER MODULE INSPECTION [L3 WITH TC]

E6U014018701W02

1. Inspect using the wave profile.
   - If any incorrect voltage is detected, inspect the related system(s), wiring harnesses and connector(s).

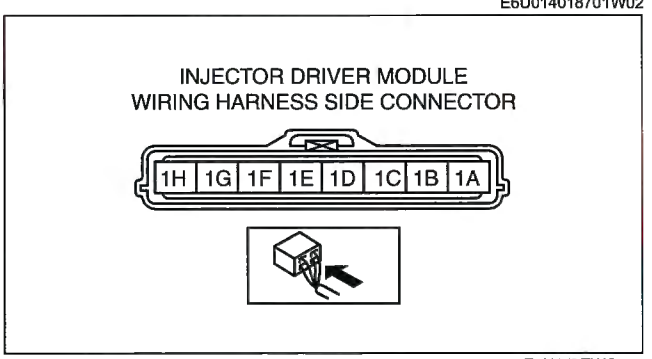

E6U140ZWC301

Fuel Injector Signal (+)

Injector driver module terminals

- Fuel injection No.1: 1F(+) — Body ground(–)
- Fuel injection No.2: 1A(+) — Body ground(–)
- Fuel injection No.3: 1A(+) — Body ground(–)
- Fuel injection No.4: 1F(+) — Body ground(–)

Oscilloscope setting

- 25 V/DIV (Y), 0.2 ms/DIV (X), DC range

Vehicle condition

- Idle after warm up (no load, P/S off, A/C off)

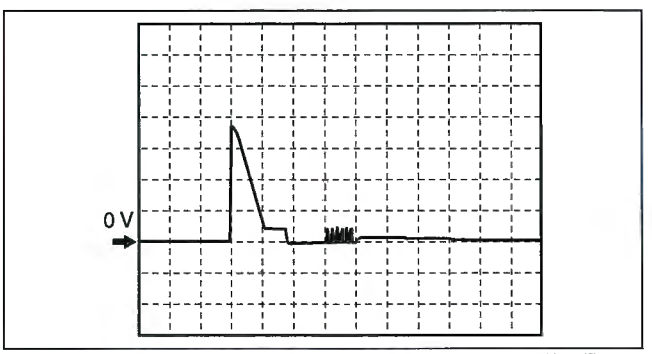

E6U140ZW6302

Fuel Injector Signal (–)

Injector driver module terminals
- Fuel injection No.1: 1E(+) — Body ground(–)
- Fuel injection No.2: 1B(+) — Body ground(–)
- Fuel injection No.3: 1C(+) — Body ground(–)
- Fuel injection No.4: 1D(+) — Body ground(–)

Oscilloscope setting
- 25 V/DIV (Y), 0.2 ms/DIV (X), DC range

Vehicle condition
- Idle after warm up (no load, P/S off, A/C off)

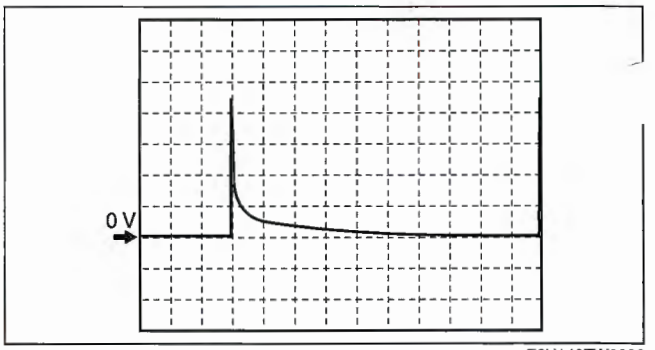

E6U140ZW6303

CLUTCH PEDAL POSITION (CPP) SWITCH INSPECTION [L3 WITH TC]

E6U014018660W04

Note
- Perform the following inspection only when directed.

Continuity Inspection
1. Verify that the clutch switch is installed properly.
2. Disconnect the negative battery cable.
3. Remove the clutch switch. (See 05–10–9 CLUTCH PEDAL REMOVAL/INSTALLATION [A26MX-R].)
4. Inspect for continuity between the clutch switch terminals using a tester.
   - If the clutch switch is normal, but PID value is out of specification, perform the "Circuit Open/ Short Inspection".
   - If not as specified, replace the clutch switch.

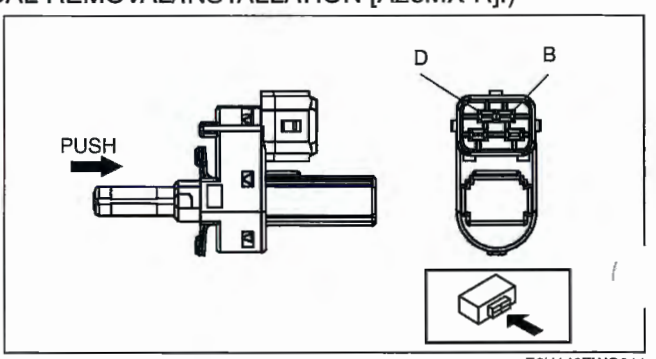

E6U140ZWC011

Specification

O—O :Continuity

Rod condition	Terminal	
	B	D
Released	O	O
Pushed		

A6E3940W022

Circuit Open/Short Inspection
1. Disconnect the PCM connector. (See 01–40B–6 PCM REMOVAL/INSTALLATION [L3 WITH TC].)
2. Inspect the following harnesses for an open or short circuit. (Continuity check)

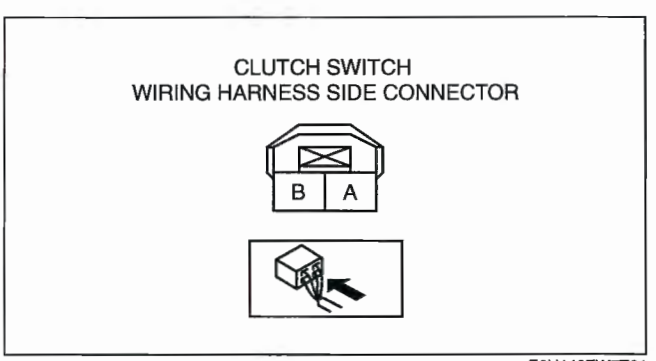

E6U140ZW7T01

Open circuit
- If there is no continuity, there is a open circuit. Repair or replace the wiring harness.
  - — Clutch switch terminal A and PCM terminal 1H
  - — Clutch switch terminal B and body ground

Short circuit
- If there is continuity, there is a short circuit. Repair or replace the wiring harness.
  - — Clutch switch terminal B and power supply
  - — Clutch switch terminal B and body ground

NEUTRAL SWITCH INSPECTION [L3 WITH TC]

E6U014017640W04

Note
- Perform the following inspection only when directed.

Continuity Inspection

1. Disconnect the negative battery cable.
2. Remove the neutral switch. (See 05–15A–4 MANUAL TRANSAXLE REMOVAL/INSTALLATION [G35M-R].)
3. Inspect for continuity between the neutral switch terminals using a tester.
   - If the neutral switch is normal, but PID value is out of specification, perform the "Circuit Open/Short Inspection".
   - If not as specified, replace the neutral switch.

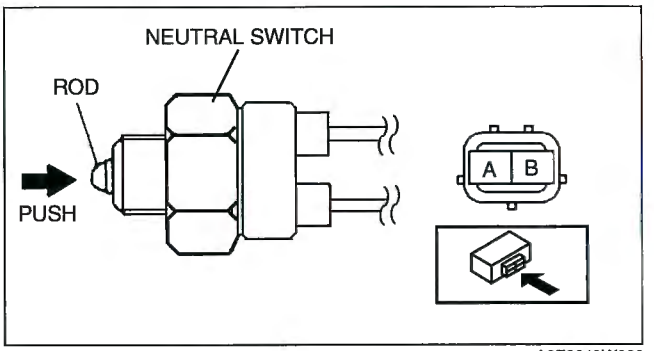

A6E3940W023

Specification

O—O : Continuity

Condition	Terminal	
	A	B
Rod pushed	O	O
Rod released		

E6U140ZWC028

Circuit Open/Short Inspection

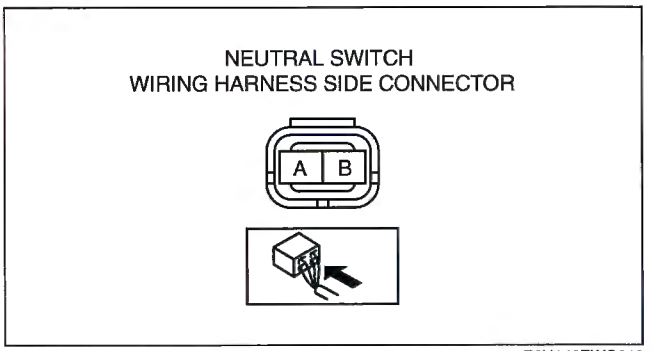

E6U140ZWC013

1. Disconnect the PCM connector. (See 01–40B–6 PCM REMOVAL/INSTALLATION [L3 WITH TC].)
2. Inspect the following harnesses for an open or short circuit. (Continuity check)

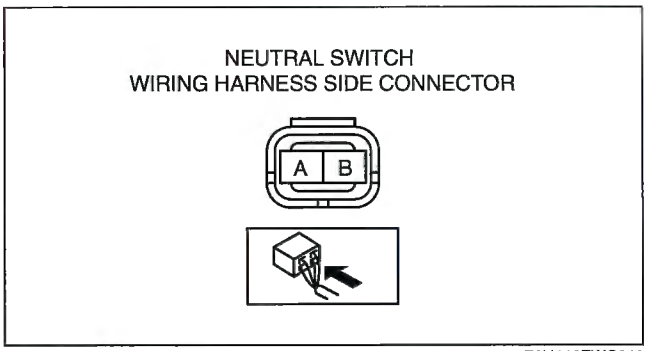

E6U140ZWC018

Open circuit
- If there is no continuity, there is an open circuit. Repair or replace the wiring harness.
  - — Neutral switch terminal B and PCM terminal 1W
  - — Neutral switch terminal A and body ground

Short circuit
- If there is no continuity, there is a short circuit. Repair or replace the wiring harness.
  - — Neutral switch terminal B and body ground

POWER STEERING PRESSURE (PSP) SWITCH INSPECTION [L3 WITH TC]

E6U014032230W04

Note
- Perform the following inspection only when directed.

Continuity Inspection

1. Inspect the following if the power steering is inoperative (See 06–12–4 POWER STEERING FLUID INSPECTION.):
   - Power steering fluid level
   - Power steering fluid leakage
   - Power steering fluid pressure
2. Disconnect the PSP switch connector.
3. Start the engine.
4. Inspect for continuity between the PSP switch terminal and ground using a tester.
   - If not as specified, replace the PSP switch. (See 06–12–27 POWER STEERING OIL PUMP REMOVAL/INSTALLATION [L3, L3 WITH TC].)
   - If the PSP switch is normal, but PID value is out of specification, perform the "Circuit Open/Short Inspection".

Specification

○—○ :Continuity

Condition	Terminal	GND
Steering wheel in straight ahead position		
While turning steering wheel	○	○

A6E3940W019

Circuit Open/Short Inspection

1. Disconnect the PCM connector. (See 01–40B–6 PCM REMOVAL/INSTALLATION [L3 WITH TC].)
2. Inspect the following harnesses for an open or short circuit. (Continuity check)

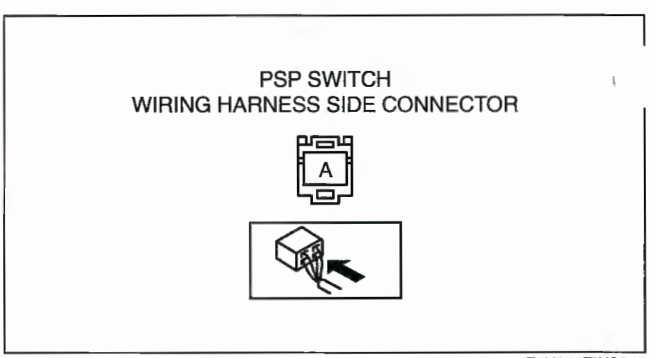

E6U140ZWC016

Open circuit
- If there is no continuity, there is an open circuit. Repair or replace the wiring harness.
  — PSP switch terminal and PCM terminal 1Z

Short circuit
- If there is no continuity, there is a short circuit. Repair or replace the wiring harness.
  — PSP switch terminal and body ground

VARIABLE SWIRL SHUTTER VALVE SWITCH INSPECTION [L3 WITH TC]

E6U014018990W01

Note
- Perform the following inspection only when directed.

Voltage Inspection

1. Turn the ignition switch to the ON position (Engine off).
2. Verify that the PCM terminal 1N voltage is as shown in the following table when the variable swirl shutter valve actuator rod is depressed and released by hand.

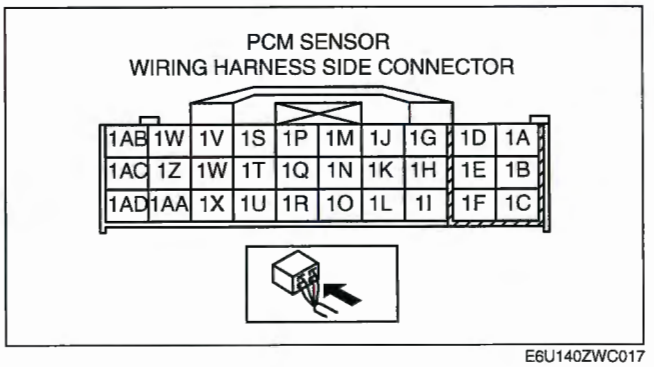

E6U140ZWC017

- If not as specified, perform the "Circuit Open/Short Inspection".
  - — If there is no open or short circuit, replace the intake manifold. (See 01–13B–4 INTAKE AIR SYSTEM REMOVAL/INSTALLATION [L3 WITH TC].)

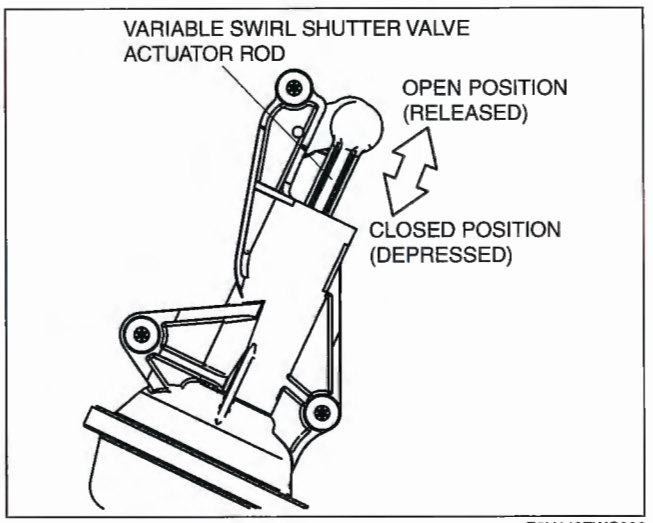

E6U140ZWC302

Variable swirl shutter valve switch output voltage

Condition	PCM terminal 1N
Released (Open position)	Approx. 5.0 V
Depressed (Closed position)	Below 1.0 V

Circuit Open/Short Inspection

1. Disconnect the PCM connector. (See 01–40B–6 PCM REMOVAL/INSTALLATION [L3 WITH TC].)
2. Inspect the following harnesses for an open or short circuit. (Continuity check)

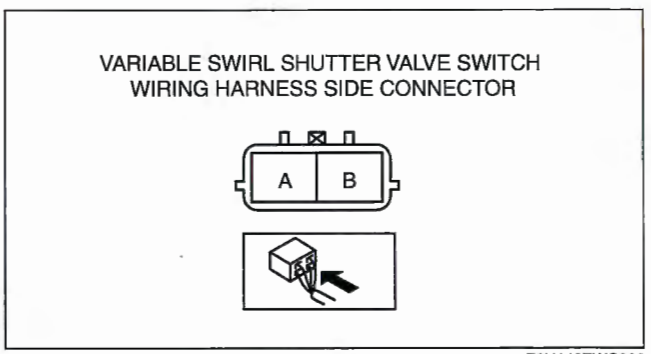

E6U140ZWC303

Open circuit
- If there is no continuity, there is an open circuit. Repair or replace the wiring harness.
  - — Variable swirl shutter valve switch terminal A and PCM terminal 1N
  - — Variable swirl shutter valve switch terminal B and body ground.

Short circuit
- If there is continuity, there is a short circuit. Repair or replace the wiring harness.
  - — Variable swirl shutter valve switch terminal A and power supply
  - — Variable swirl shutter valve switch terminal A and body ground
  - — Variable swirl shutter valve switch terminal B and power supply

ACCELERATOR PEDAL POSITION (APP) SENSOR INSPECTION [L3 WITH TC]

E6U014041609W04

Note
- Perform the following inspection only when directed.

Voltage Inspection

1. Turn the ignition switch to the ON position (Engine off).
2. Verify that the PCM terminal 2A and 3D change smoothly while throttle valve is gradually opened.
   - If as verified, go to next step.
   - If not as verified, perform the "Circuit Open/Short Inspection".
     — If there is no open or short circuit, replace the throttle body. (See 01–13B–4 INTAKE AIR SYSTEM REMOVAL/INSTALLATION [L3 WITH TC].)
3. Verify that the PCM terminal 2A and 3D voltages are as shown in the following table.
   - If voltage is not as following table, perform the "Circuit Open/Short Inspection".
     — If there is no open or short circuit, replace accelerator pedal. (See 01–13B–15 ACCELERATOR PEDAL REMOVAL/INSTALLATION [L3 WITH TC].)

APP sensor output voltage

Condition	PCM terminal 3D (APP sensor No.1)	PCM terminal 2A (APP sensor No.2)
APP is released	Approx. 1.6 V	Approx. 1.0 V
APP is depressed	Approx. 3.9 V	Approx. 3.4 V

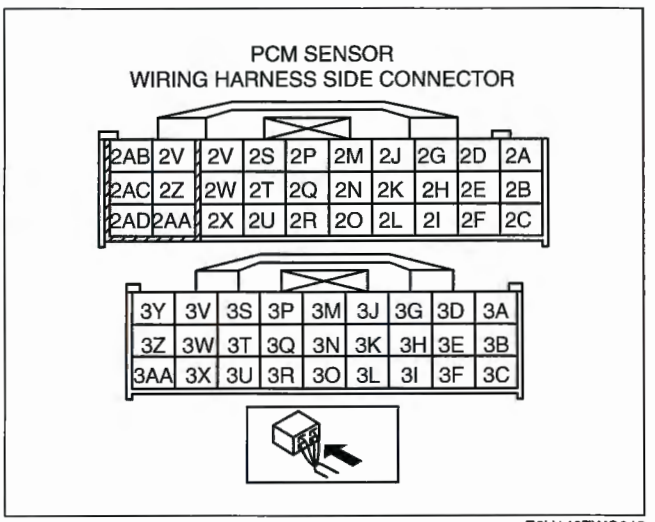

E6U140ZWC019

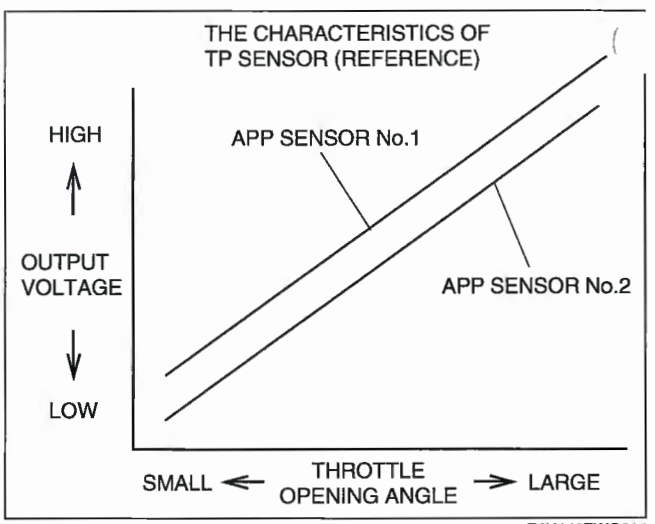

E6U140ZWC014

Circuit Open/Short Inspection

1. Disconnect the PCM connector. (See 01–40B–6 PCM REMOVAL/INSTALLATION [L3 WITH TC].) Inspect the following wiring harnesses for an open or short circuit. (Continuity check)

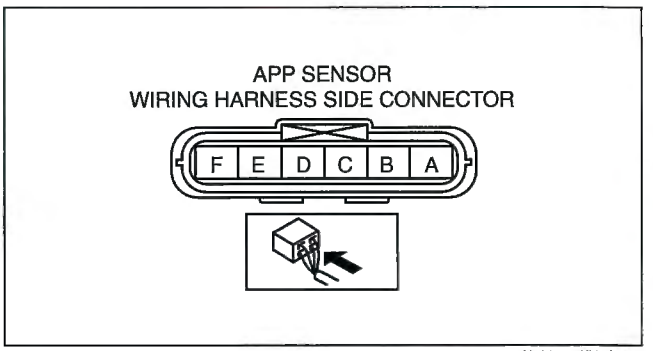

E6U140ZWC020

Open circuit

- If there is no continuity, there is an open circuit. Repair or replace the wiring harness.
  - — APP sensor terminal A and PCM terminal 2K
  - — APP sensor terminal B and PCM terminal 2H
  - — APP sensor terminal C and PCM terminal 2A
  - — APP sensor terminal D and PCM terminal 3G
  - — APP sensor terminal E and PCM terminal 3A
  - — APP sensor terminal F and PCM terminal 3D

Short circuit

- If there is continuity, there is a short circuit. Repair or replace the wiring harness.
  - — APP sensor terminal A and power supply
  - — APP sensor terminal A and body ground
  - — APP sensor terminal B and power supply
  - — APP sensor terminal C and power supply
  - — APP sensor terminal C and body ground
  - — APP sensor terminal D and power supply
  - — APP sensor terminal D and body ground
  - — APP sensor terminal E and power supply
  - — APP sensor terminal F and power supply
  - — APP sensor terminal F and body ground

THROTTLE POSITION (TP) SENSOR INSPECTION [L3 WITH TC]

E6U014018910W04

Note

- Perform the following inspection only when directed.

tage Inspection

1. Verify that no DTC related to APP sensor has been detected.
   - If any DTCs related to APP sensor have been detected, perform the DTC inspection. (See 01–02B–14 DTC TABLE [L3 WITH TC].)
2. Start the engine and warm it up (ECT: **more than 80°C {176 °F}**).
3. Turn the ignition switch to the ON position (Engine off).
4. Verify that the PCM terminal 3J and 3M change smoothly while throttle valve is gradually opened.
   - If as verified, go to next step.
   - If not as verified, perform the "Circuit Open/Short Inspection".
     - — If there is no open or short circuit, replace the throttle body.

5. Verify that the PCM terminal 3J and 3M voltages are as shown in the following table.
   - If voltage is not as following table, perform the "Circuit Open/Short Inspection".
     — If there is no open or short circuit, replace the throttle body.

TP sensor output voltage

Condition	PCM terminal 3M (TP sensor No.1)	PCM terminal 3J (TP sensor No.2)
APP is released	0.4—0.6 V	4.4—4.6 V
APP is depressed	4.25—4.75 V	0.25—0.75 V

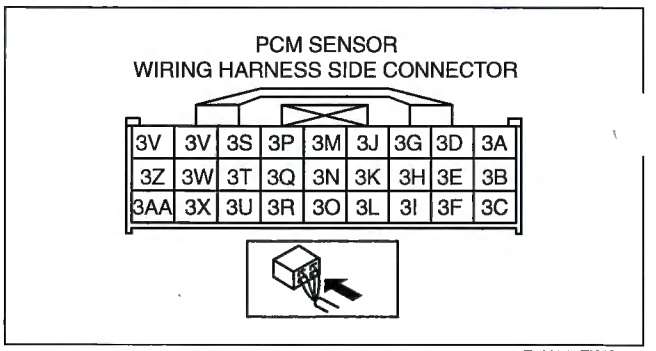

E6U140ZWC021

Circuit Open/Short Inspection

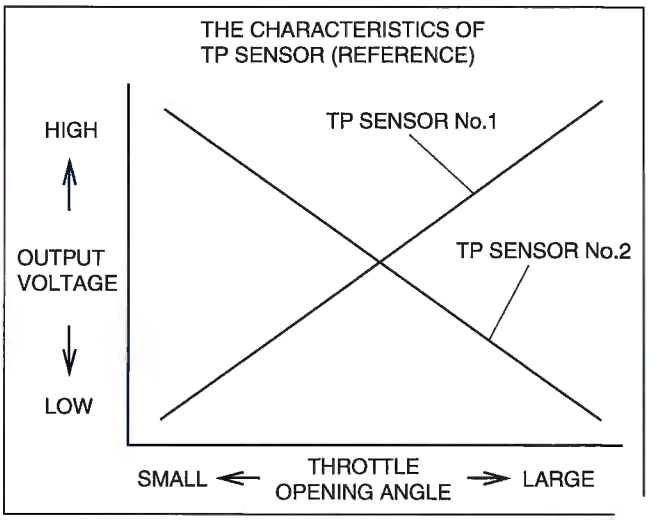

B6U0140V

1. Disconnect the PCM connector. (See 01–40B–6 PCM REMOVAL/INSTALLATION [L3 WITH TC].)
2. Inspect the following wiring harnesses for an open or short circuit. (Continuity check)

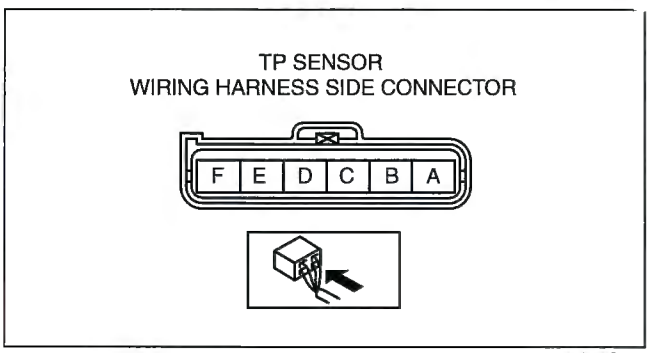

E6U140ZWC022

Open circuit

- If there is no continuity, there is an open circuit. Repair or replace the wiring harness.
  — Throttle body terminal A and PCM terminal 3M
  — Throttle body terminal B and PCM terminal 3P
  — Throttle body terminal C and PCM terminal 3J
  — Throttle body terminal D and PCM terminal 3Q

Short circuit

- If there is continuity, there is a short circuit. Repair or replace the wiring harness.
  — Throttle body terminal A and power supply
  — Throttle body terminal A and body ground
  — Throttle body terminal B and power supply
  — Throttle body terminal B and body ground
  — Throttle body terminal C and power supply
  — Throttle body terminal C and body ground
  — Throttle body terminal D and power supply

MASS AIR FLOW (MAF) SENSOR INSPECTION [L3 WITH TC]

E6U014013215W02

Visual Inspection

Note
- Perform the following inspection only when directed.

1. Visually inspect for the following on the MAF sensor. (See 01–13B–4 INTAKE AIR SYSTEM REMOVAL/INSTALLATION [L3 WITH TC].)
   - Damage
   - Cracks
   - Bent terminals
   - Terminal rust
     - — If any of the above are found, replace the MAF sensor.
     - — If the MAF PID value is out of specification, carry out the "Circuit Open/Short Inspection".

Circuit Open/Short Inspection

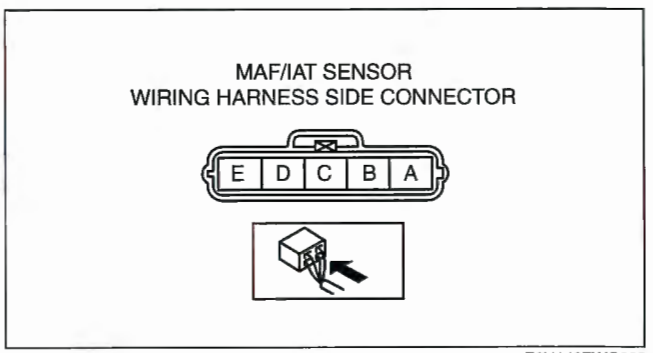

E6U140ZWC023

1. Disconnect the PCM connector. (See 01–40B–6 PCM REMOVAL/INSTALLATION [L3 WITH TC].) Disconnect the MAF sensor connector.
2. Inspect the following wiring harnesses for an open or short circuit. (Continuity check)

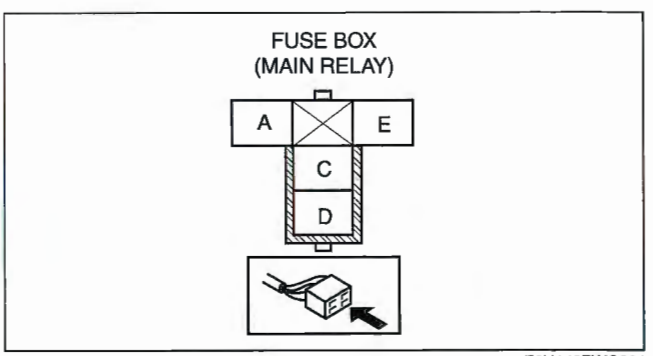

E6U140ZWC304

Open circuit
- If there is no continuity, there is an open circuit. Repair or replace the wiring harness.
  - — MAF sensor terminal A and main relay terminal C
  - — MAF sensor terminal B and PCM terminal 1I
  - — MAF sensor terminal C and PCM terminal 1P

Short circuit
- If there is continuity, there is a short circuit. Repair or replace the wiring harness.
  - — MAF sensor terminal A and body ground
  - — MAF sensor terminal C and power supply
  - — MAF sensor terminal C and body ground
  - — MAF sensor terminal B and power supply

Specification

Condition	Intake MAF (g/s)	Engine load calculated value (%)
Idle*1	2.72—2.94	17.1—18.5
Engine Speed 2,500 rpm*2	8.00—8.66	14.2—15.2

*1 : 650—750 rpm
*2 : No load or neutral position

ENGINE COOLANT TEMPERATURE (ECT) SENSOR REMOVAL/INSTALLATION [L3 WITH TC]

E6U014018840W07

Warning

- **A hot engine can cause severe burns. Turn off the engine and wait until it is cool before removin the ECT sensor.**

1. Remove the charge air cooler cover.
2. Drain the engine coolant. (See 01–12B–2 COOLING SYSTEM SERVICE WARNINGS [L3 WITH TC].)
3. Disconnect the ECT sensor connector.
4. Remove the ECT sensor.
5. Install in the reverse order of removal.

Tightening torque
10—14 N·m
{1.02—1.42 kgf·m, 7.38—10.32 ft·lbf}

6. Refill the engine coolant. (See 01–12B–2 COOLING SYSTEM SERVICE WARNINGS [L3 WITH TC].)

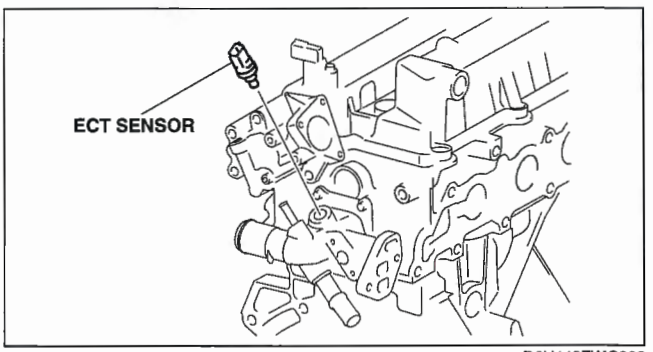

D6U140ZWC002

ENGINE COOLANT TEMPERATURE (ECT) SENSOR INSPECTION [L3 WITH TC]

E6U014018840W08

Note

- Perform the following inspection only when directed.

ECT Sensor Resistance Inspection

1. Drain the engine coolant. (See 01–12B–2 COOLING SYSTEM SERVICE WARNINGS [L3 WITH TC].)
2. Remove the ECT sensor (located above the starter).
3. Place the ECT sensor in water with a thermometer, and heat the water gradually.
4. Measure the resistance between the ECT sensor terminals A and B using a tester.
   - If not as specified, replace the ECT sensor.
   - If the ECT sensor is normal, but PID value is out of specification, perform the "Circuit Open/Short Inspection".

Specification

Water temperature (°C {°F})	Resistance (kilohm)
20 {68}	35.48—39.20
70 {158}	5.07—5.60
80 {176}	3.65—4.02

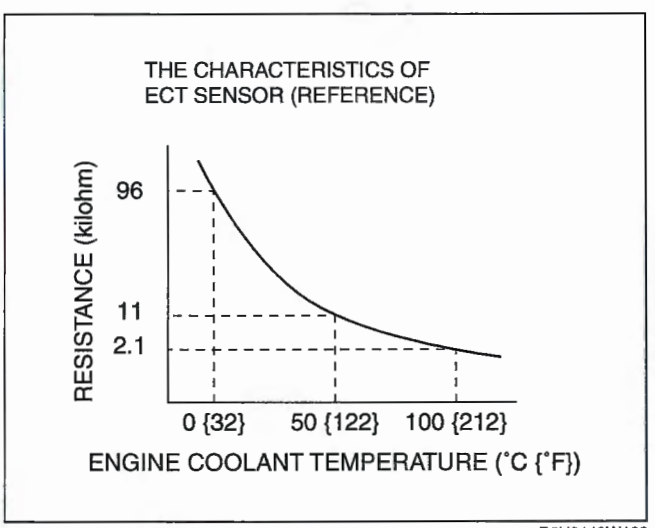

B6U0140W102

Circuit Open/Short Inspection

1. Disconnect the PCM connector. (See 01–40B–6 PCM REMOVAL/INSTALLATION [L3 WITH TC].)
2. Inspect the following wiring harnesses for an open or short circuit. (Continuity check)

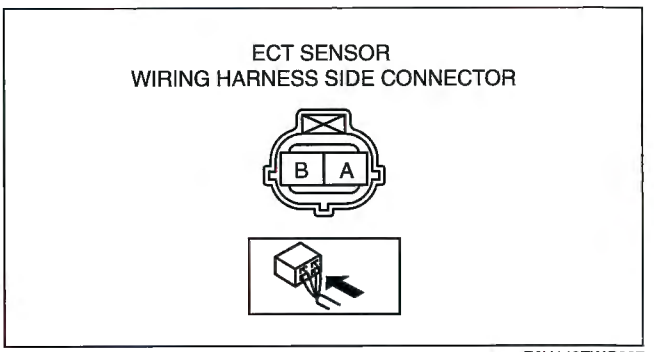

E6U140ZWC027

Open circuit

- If there is no continuity, there is an open circuit. Repair or replace the wiring harness.
  - — ECT sensor terminal A and PCM terminal 1M
  - — ECT sensor terminal B and PCM terminal 2H

Short circuit

- If there is continuity, there is a short circuit. Repair or replace the wiring harness.
  - — ECT sensor terminal A and power supply
  - — ECT sensor terminal A and body ground
  - — ECT sensor terminal B and power supply

MANIFOLD ABSOLUTE PRESSURE (MAP) SENSOR INSPECTION [L3 WITH TC]

E6U014018212W02

Note

- Perform the following inspection only when directed.
- The following vacuum values are indicated by relative pressure from the MAP sensor.

1. Connect the WDS or equivalent to the DLC-2.
2. Turn the ignition switch to ON (Engine off).
3. Select MAP PID on the WDS or equivalent.
4. Verify that the MAP PID (pressure) and barometric pressure are practically equal.
   - If not as verified, perform the "Circuit Open/Short Inspection".
     - — If there is no open or short circuit, replace the MAP sensor.
   - If as verified, go to next step.
5. Apply vacuum of **–25.0 kPa {–187 mmHg, –7.38 inHg}** to the MAP sensor, and verify that the MAP variation from that of Step 4 is approx. **25.0 kPa {187 mmHg, 7.38 inHg}**.
   - If not as verified, perform the "Circuit Open/Short inspection".
     - — If there is no open or short circuit, replace the barometric pressure sensor. (See 01–13B–4 INTAKE AIR SYSTEM REMOVAL/INSTALLATION [L3 WITH TC].)

Circuit Open/Short Inspection

1. Disconnect the PCM connector. (See 01–40B–6 PCM REMOVAL/INSTALLATION [L3 WITH TC].)
2. Inspect the following wiring harnesses for an open or short circuit. (Continuity check)

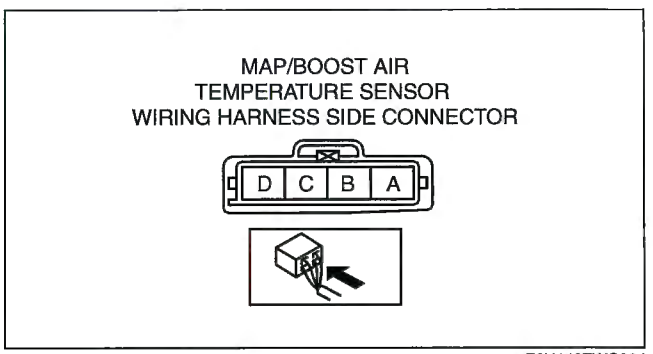

E6U140ZWC024

Open circuit

- If there is no continuity, there is an open circuit. Repair or replace the wiring harness.
  - — MAP/boost air temperature sensor terminal A and PCM terminal 2H
  - — MAP/boost air temperature sensor terminal D and PCM terminal 1J
  - — MAP/boost air temperature sensor terminal C and PCM terminal 2K

Short circuit

- If there is continuity, there is a short circuit. Repair or replace the wiring harness.
  - — MAP/boost air temperature sensor terminal C and power supply.
  - — MAP/boost air temperature sensor terminal C and body ground.
  - — MAP/boost air temperature sensor terminal D and power supply.
  - — MAP/boost air temperature sensor terminal D and body ground

MANIFOLD ABSOLUTE PRESSURE (MAP) SENSOR/BOOST AIR TEMPERATURE SENSOR REMOVAL/INSTALLATION [L3 WITH TC]

E6U014018212W03

1. Disconnect the negative battery cable.

2. Remove the charge air cooler cover.
3. Disconnect the MAP sensor connector.
4. Remove MAP sensor from the intake manifold.
5. Install in the reverse order of removal.

Tightening torque
5—7 N·m {51—71 kgf·cm, 45—61 in·lbf}

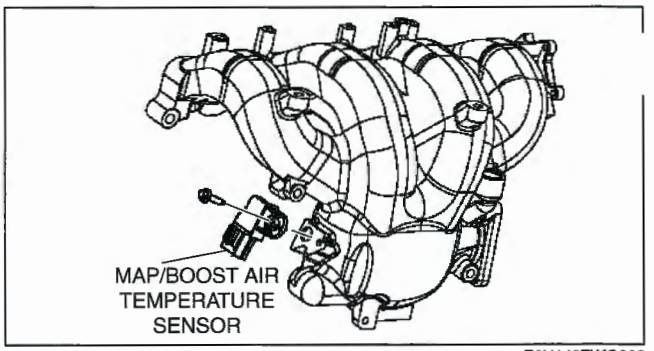

E6U140ZWC003

BOOST AIR TEMPERATURE SENSOR INSPECTION [L3 WITH TC]

E6U014018842W04

Resistance Inspection

Note
- Perform the following inspection only when directed.

1. Disconnect MAP/boost air temperature sensor.
2. Measure the resistance between the MAP/boost air temperature sensor terminals A and B using a tester.
   - If not as specified, replace the MAP/boost air temperature sensor. (See 01–13B–4 INTAKE AIR SYSTEM REMOVAL/INSTALLATION [L3 WITH TC].)
   - If the MAP/boost air temperature sensor is normal, but PID are out of specification, perform the "Circuit Open/Short Inspection".

Specification

Ambient temperature (°C {°F})	Resistance (kilohm)
–20 {–4}	14.04—17.33
20 {68}	2.31—2.72
60 {140}	0.572—0.655

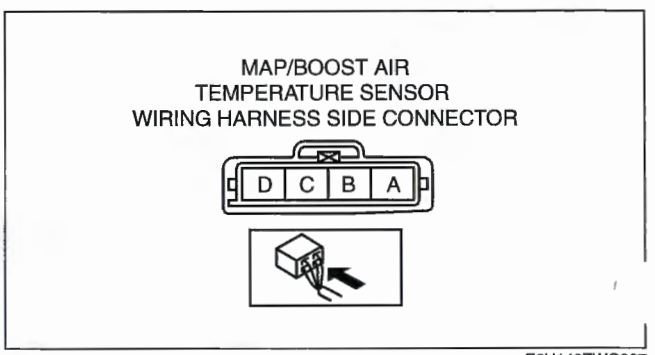

E6U140ZWC307

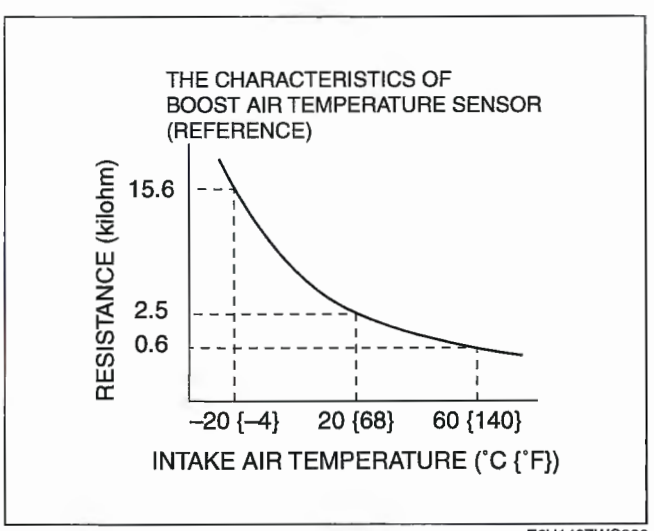

E6U140ZWC306

Circuit Open/Short Inspection

1. Disconnect the PCM connector. (See 01–40B–6 PCM REMOVAL/INSTALLATION [L3 WITH TC].)
2. Inspect the following wiring harnesses for an open or short circuit. (Continuity check)

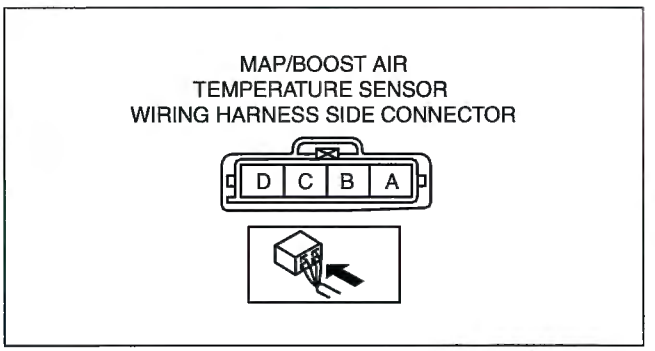

E6U140ZWC307

Open circuit

- If there is no continuity, there is an open circuit. Repair or replace the wiring harness.
  - — MAP/boost air temperature sensor terminal A and PCM terminal 2H
  - — MAP/boost air temperature sensor terminal B and PCM terminal 1S
  - — MAP/boost air temperature sensor terminal C and PCM terminal 2K

Short circuit

- If there is continuity, there is a short circuit. Repair or replace the wiring harness.
  - — MAP/boost air temperature sensor terminal A and power supply
  - — MAP/boost air temperature sensor terminal B and power supply
  - — MAP/boost air temperature sensor terminal B and body ground
  - — MAP/boost air temperature sensor terminal C and body ground

INTAKE AIR TEMPERATURE (IAT) SENSOR INSPECTION [L3 WITH TC]

E6U014018842W05

Resistance Inspection

Note

- Perform the following inspection only when directed.

1. Disconnect the MAF/IAT sensor.
2. Measure the resistance between the MAF/IAT sensor terminals D and E using a tester.
   - If not as specified, replace the MAF/IAT sensor. (See 01–13B–4 INTAKE AIR SYSTEM REMOVAL/INSTALLATION [L3 WITH TC].)
   - If the MAF/IAT sensor is normal, but the PID is out of specification, perform the "Circuit Open/Short Inspection".

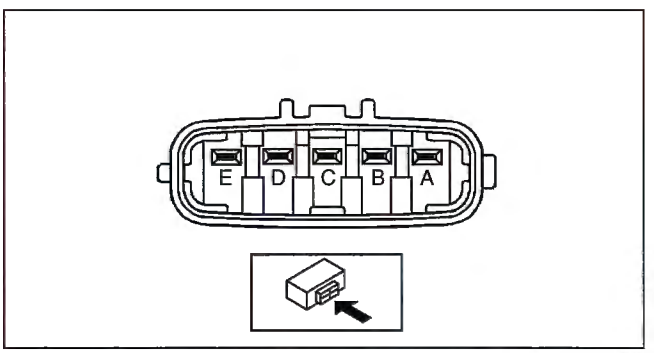

A6E3940W005

Specification

Ambient temperature (°C {°F})	Resistance (kilohm)
–20 {–4}	13.6—18.4
20 {68}	2.21—2.69
60 {140}	0.493—0.667

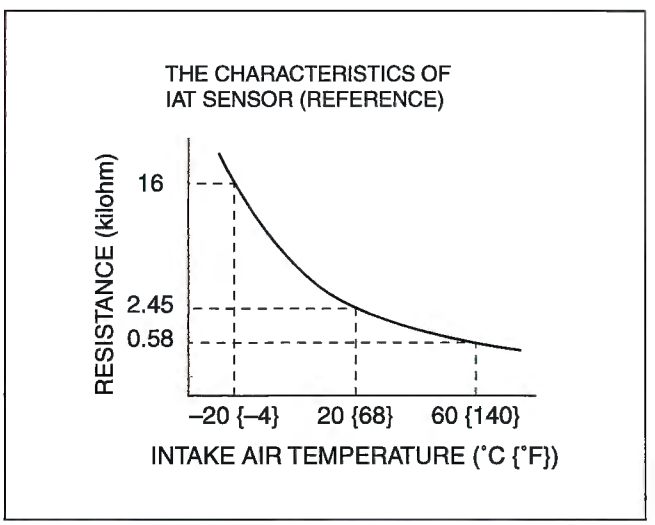

B6U0140W092

Circuit Open/Short Inspection

1. Disconnect the PCM connector. (See 01–40B–6 PCM REMOVAL/INSTALLATION [L3 WITH TC].)
2. Inspect the following wiring harnesses for an open or short circuit. (Continuity check)

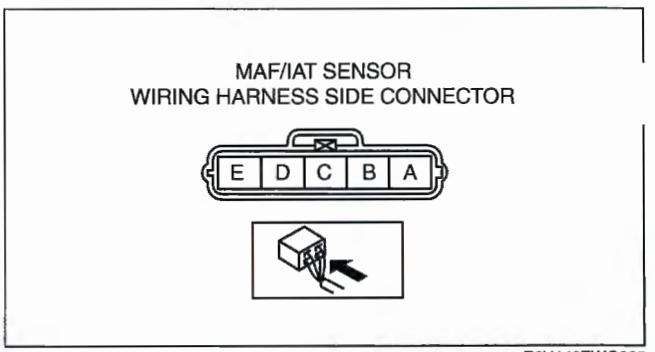

E6U140ZWC025

Open circuit

- If there is no continuity, there is an open circuit. Repair or replace the wiring harness.
  - — MAF/IAT sensor terminal D and PCM terminal 2V
  - — MAF/IAT sensor terminal E and PCM terminal 2H

Short circuit

- If there is continuity, there is a short circuit. Repair or replace the wiring harness.
  - — MAF/IAT sensor terminal E and power supply
  - — MAF/IAT sensor terminal D and power supply
  - — MAF/IAT sensor terminal D and body ground

BAROMETRIC PRESSURE (BARO) SENSOR INSPECTION [L3 WITH TC]

E6U014018213W01

Note

- Perform the following inspection only when directed.
- The following vacuum values are indicated by relative pressure from the PCM. (See 01–40B–6 PCM REMOVAL/INSTALLATION [L3 WITH TC].)

1. Connect the WDS or equivalent to the DLC-2.
2. Turn the ignition switch to the ON position.
3. Select BARO on the WDS or equivalent.
4. Verify that the BARO PID (pressure) and barometric pressure are practically equal.
   - If not as verified, perform the "Circuit Open/Short Inspection".
     - — If there is no open or short circuit, replace the BARO sensor.
   - If as verified, go to next step.

FUEL PRESSURE SENSOR REMOVAL/INSTALLATION [L3 WITH TC]

E6U014018213W02

Note

- If the fuel pressure sensor is removed, do not reuse the fuel pressure sensor and the fuel delivery pipe. When you replace the fuel pressure sensor, replace a new fuel delivery pipe with a new fuel pressure sensor. 01–14B–25 FUEL INJECTOR REMOVAL/INSTALLATION [L3 WITH TC]

FUEL PRESSURE SENSOR INSPECTION [L3 WITH TC]

E6U014018213W03

Note

- Perform the following inspection only when directed.
- The following vacuum values are indicated by relative pressure from the fuel pressure sensor.

1. Remove the charge air cooler cover.
2. Connect the WDS or equivalent to the DLC-2.
3. Turn the ignition switch to the ON position (Engine off).
4. Select the FUEL_PRES PID on the WDS or equivalent.
5. After warming up the engine, verify that the FUEL_PRES PID is at the standard value under the following conditions.
   - — If not as verified, replace the fuel delivery pipe.

Step	Condition	FUEL_PRES PID
1	• Idle • **90 s** after engine is started	**Approx. 3 MPa**
2	• Idle • Spill valve solenoid valve connector is disconnected	**Approx. 530 kPa**

6. After connecting the spill valve control solenoid valve connector, clear the DTC.

Circuit Open/Short Inspection

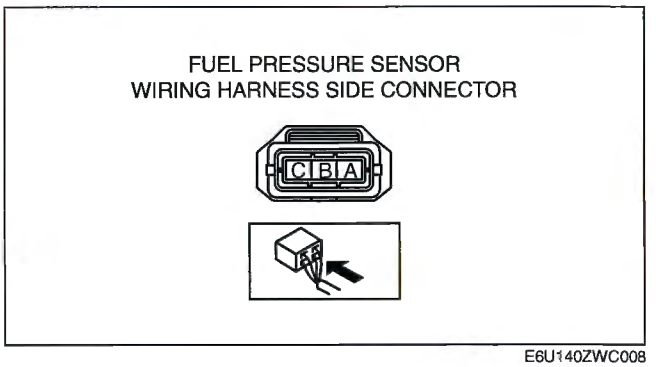

E6U140ZWC008

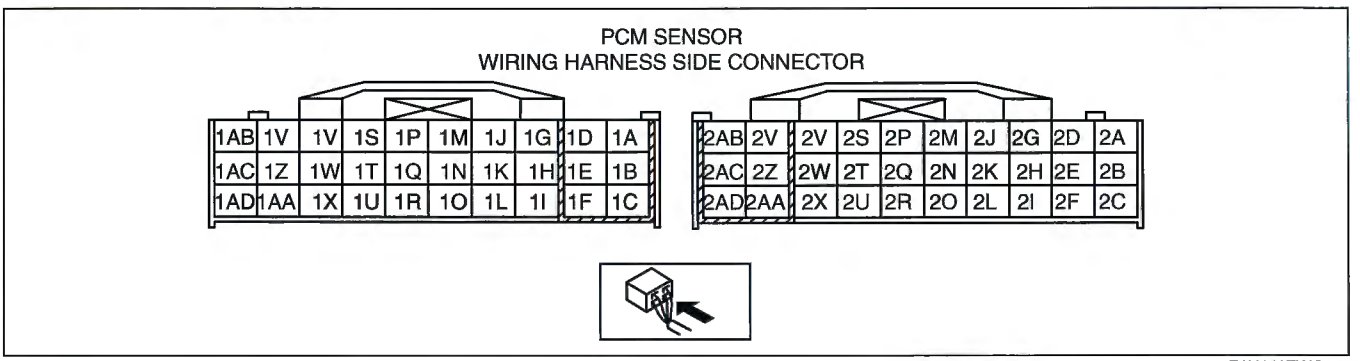

E6U140ZWC004

1. Disconnect the PCM connector. (See 01–40B–6 PCM REMOVAL/INSTALLATION [L3 WITH TC].)
2. Inspect the following wiring harnesses for an open or short circuit. (Continuity check)

Open circuit

If there is no continuity, there is an open circuit. Repair or replace the wiring harness.
- — Fuel pressure sensor terminal A and PCM terminal 2H
- — Fuel pressure sensor terminal B and PCM terminal 1V
- — Fuel pressure sensor terminal C and PCM terminal 2K

Short circuit

- If there is continuity, there is a short circuit. Repair or replace the wiring harness.
  - — Fuel pressure sensor terminal A and power supply.
  - — Fuel pressure sensor terminal B and power supply.
  - — Fuel pressure sensor terminal B and body ground.
  - — Fuel pressure sensor terminal C and body ground

KNOCK SENSOR (KS) INSPECTION [L3 WITH TC]

E6U014018920W07

Note
- Perform the following test only when directed.

Resistance Inspection

1. Turn the ignition switch to the LOCK position.
2. Disconnect the KS connector.
3. Measure the resistance between the KS terminals A and B using a tester.
   - If not as specified, replace the KS. (See01–40B–36 KNOCK SENSOR (KS) REMOVAL/INSTALLATION [L3 WITH TC].)
   - If the KS is normal, but PID value is out of specification, perform the “Circuit Open/Short Inspection”.

Specification

Approx. 4.87 megohms

Circuit Open/Short Inspection

1. Disconnect the PCM connector. (See 01–40B–6 PCM REMOVAL/INSTALLATION [L3 WITH TC].)
2. Inspect the following wiring harnesses for an open or short circuit. (Continuity check)

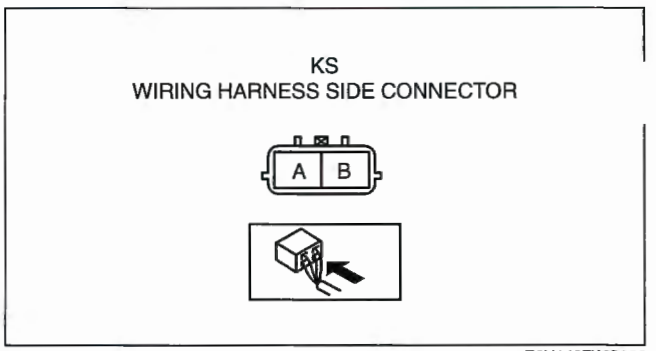

E6U140ZWC026

Open circuit

- If there is no continuity, there is an open circuit. Repair or replace the wiring harness.
  - — KS terminal A and PCM terminal 2S
  - — KS terminal B and PCM terminal 2P

Short circuit

- If there is continuity, there is a short circuit. Repair or replace the wiring harness.
  - — KS terminal A and power supply
  - — KS terminal A and body ground
  - — KS terminal B and power supply
  - — KS terminal B and body ground

KNOCK SENSOR (KS) REMOVAL/INSTALLATION [L3 WITH TC]

E6U014018920W08

Caution

- **Be careful not to impact the sensor.**
- **Verify that there is no debris between the sensor and the cylinder block before installing.**

1. Remove the intake manifold. (See01–13B–4 INTAKE AIR SYSTEM REMOVAL/INSTALLATION [L3 WITH TC])
2. Remove the KS attachment bolt to remove the KS.
3. Install in the reverse order of removal.

Tightening torque
16—24 N·m {1.7—2.4 kgf·m, 12—17 ft·lbf}

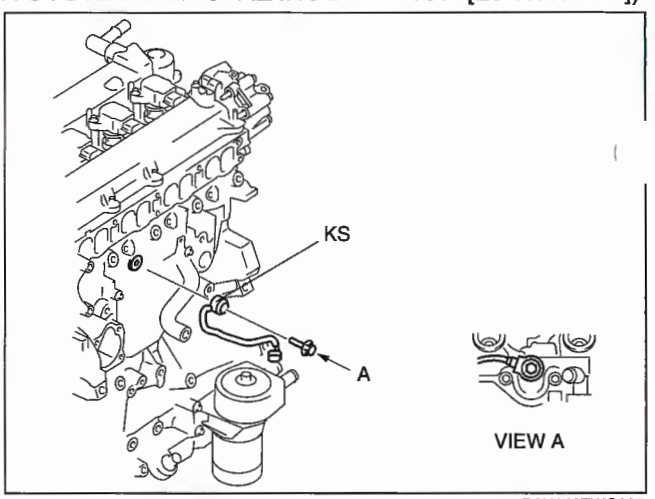

D6U140ZWC005

CAMSHAFT POSITION (CMP) SENSOR INSPECTION [L3 WITH TC]

E6U014018230W11

Note

- Perform the following inspection according to the DATA MONITOR function (indicated by monitor item from here onwards).

Visual Inspection

1. Disconnect the negative battery cable.
2. Remove the CMP sensor. (See 01–40B–38 CAMSHAFT POSITION (CMP) SENSOR REMOVAL/ INSTALLATION [L3 WITH TC].)
3. Verify that there are no metal shavings on the sensor.
   - If the monitor item condition/specification (reference) is not within the specification even though there is no malfunction, carry out the “Circuit Open/Short Inspection”.

Voltage inspection

1. Idle the engine.

Caution

- **Water penetrating the connector will cause sensor malfunction. To prevent this, be careful not to damage the wiring harnesses or the waterproof connector so as to cause water penetration.**

2. Measure the output voltage using an oscilloscope.
   - If not within the specification, replace the CMP sensor.
   - If the monitor item condition/specification (reference) is not within the specification, even though the voltage is within the specification, carry out the "Circuit Open/ Short Inspection".

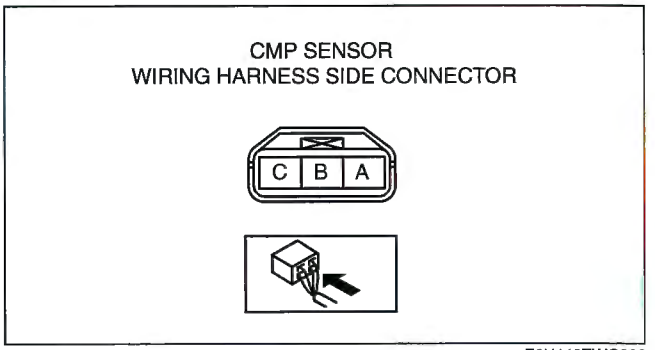

E6U140ZWC308

Voltage

Terminal	Voltage (V)	Condition
A	B+	Under any condition
C	4.8 or more	High output*
	0.8 or less	Low output*
B	0	Under any condition

* : Output voltage varies with camshaft rotation.

Circuit Open/Short Inspection

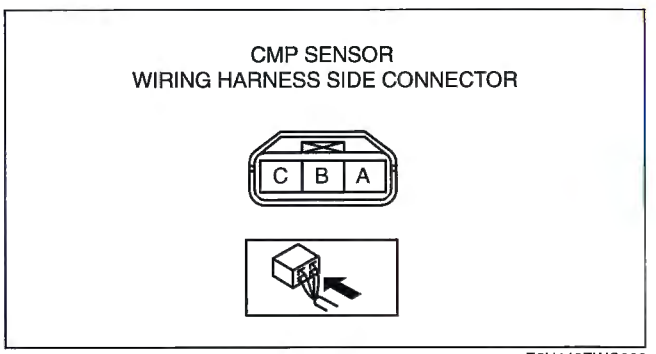

E6U140ZWC308

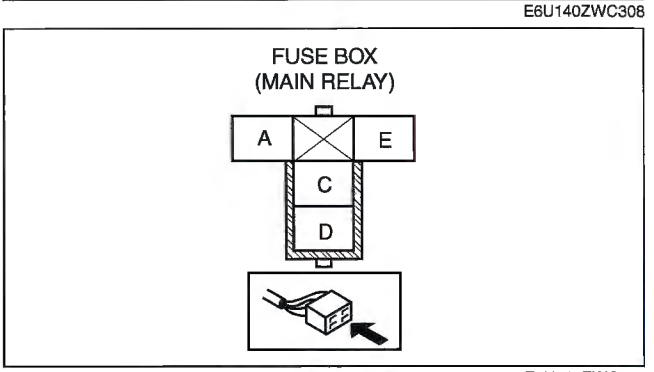

E6U140ZWC304

1. Inspect the following wiring harnesses for an open or short circuit. (Continuity check)

Open circuit
- If there is no continuity, the circuit is open. Repair or replace the wiring harness.
  - — CMP sensor terminal A and main relay terminal C
  - — CMP sensor terminal B and PCM terminal 2H
  - — CMP sensor terminal C and PCM terminal 2E

Short circuit
- If there is continuity, the circuit is shorted. Repair or replace the wiring harness.
  - — CMP sensor terminal A and body ground
  - — CMP sensor terminal B and power supply
  - — CMP sensor terminal B and body ground
  - — CMP sensor terminal C and power supply

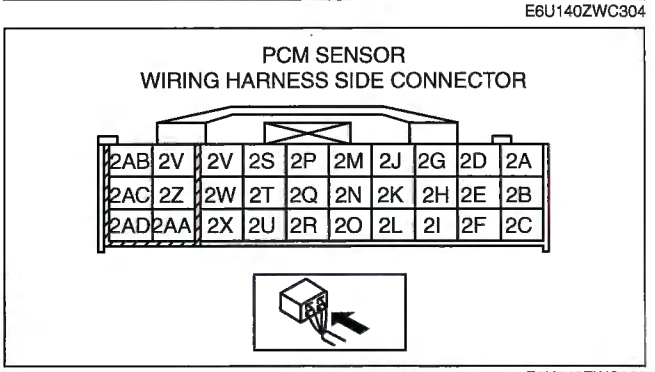

E6U140ZWC309

CAMSHAFT POSITION (CMP) SENSOR REMOVAL/INSTALLATION [L3 WITH TC]

E6U014018230W12

1. Remove the battery cover.
2. Disconnect the negative battery cable.
3. Remove the charge air cooler cover.

Caution
- **When replacing the CMP sensor, make sure there is no foreign material on it such as metal shavings. If it is installed with foreign material, the sensor output signal will malfunction resulting from fluctuation in magnetic flux and cause a deterioration in engine control.**

4. Disconnect the CMP sensor connector.
5. Remove the CMP sensor installation bolt.
6. Remove the CMP sensor from the cylinder head cover.
7. Install in the reverse order of removal.

Tightening torque
5.5—7.5 N·m {56—76 kgf·cm, 49—66 in·lbf}

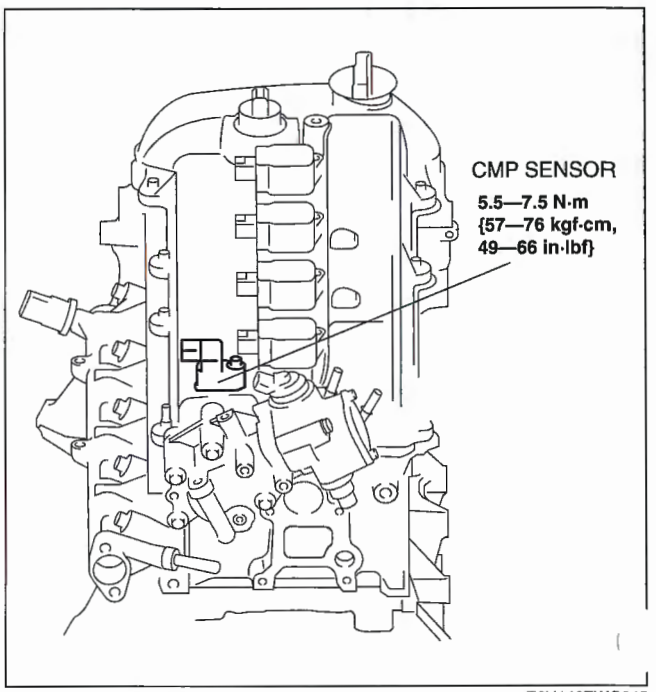

E6U140ZWC015

CRANKSHAFT POSITION (CKP) SENSOR INSPECTION [L3 WITH TC]

E6U014011431W01

Note
- Perform the following inspection according to the DATA MONITOR function (indicated by monitor item from here onwards).

Air Gap Inspection
1. Verify that the CKP sensor is securely installed.
2. Using a thickness gauge, measure the air gap between the plate projections at the back of crankshaft pulley and the CKP sensor.
   - If not within the specification, inspect the plate projections for cracks or bending.
     — If there is any malfunction, replace the plate.
     — If the monitor item condition/specification (reference) is not within the specification, even though there is no malfunction, carry out the "Circuit Open/Short Inspection".

Air gap
0.5—1.5 mm {0.02—0.05 in}

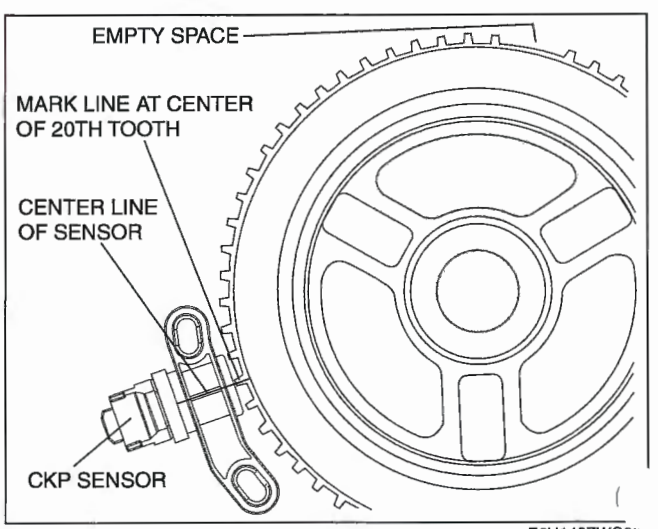

E6U140ZWC009

Visual inspection

1. Disconnect the negative battery cable.
2. Remove the CKP sensor. (See 01–40B–41 CRANKSHAFT POSITION (CKP) SENSOR REMOVAL/ INSTALLATION [L3 WITH TC].)
   Verify that there are no metal shavings on the sensor.
   - If the monitor item condition/specification (reference) is without the specification even though there is no malfunction, carry out the "Circuit Open/Short Inspection".

Voltage Inspection

1. Idle the engine.

Caution

- **Water penetrating the connector will cause sensor malfunction. To prevent this, be careful not to damage the wiring harnesses or the waterproof connector so as to cause water penetration.**

2. Measure the output voltage using an oscilloscope.
   - If not within the specification, replace the CKP sensor.
   - If the monitor item condition/specification (reference) is without the specification, even though the voltage is within the specification, carry out the "Circuit Open/Short Inspection".

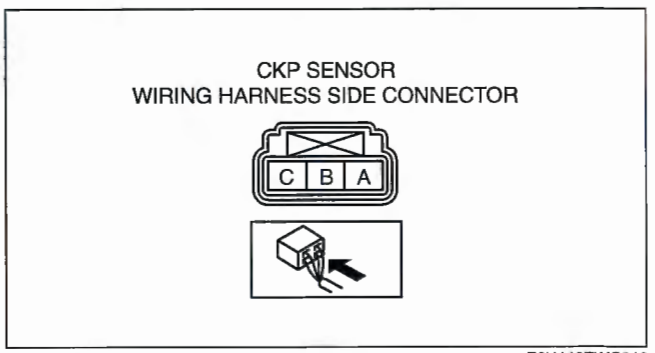

E6U140ZWC310

Voltage

Terminal	Voltage (V)	Condition
A	B+	Under any condition
B	4.8 or more	High output*
	0.8 or less	Low output*
C	0	Under any condition

* : Output voltage varies with crankshaft rotation.

Circuit Open/Short Inspection

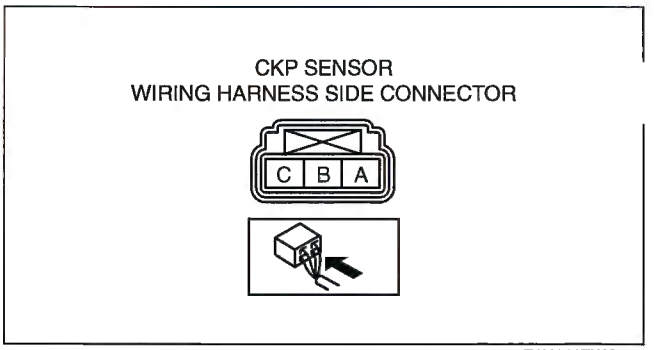

E6U140ZWC310

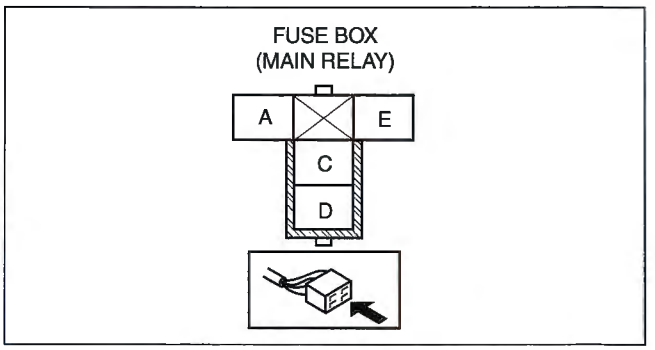

E6U140ZWC304

1. Inspect the following wiring harnesses for an open or short circuit. (Continuity check)

Open circuit

- If there is no continuity, the circuit is open. Repair or replace the wiring harness.
  - — CKP sensor terminal A and PCM terminal 2H
  - — CKP sensor terminal B and PCM terminal 2C
  - — CKP sensor terminal C and main relay terminal C

Short circuit

- If there is continuity, the circuit is shorted. Repair or replace the wiring harness.
  - — CKP sensor terminal A and power supply
  - — CKP sensor terminal B and power supply
  - — CKP sensor terminal B and body ground
  - — CKP sensor terminal C and body ground

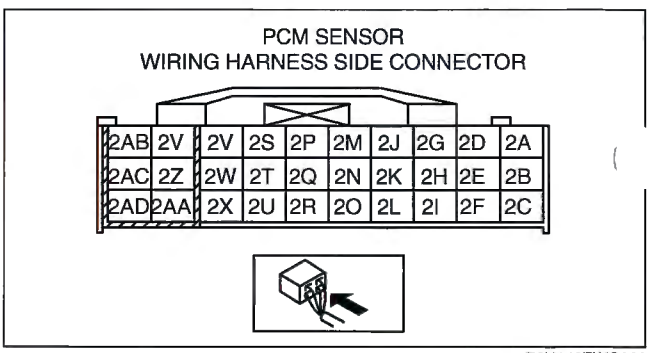

E6U140ZWC309

CRANKSHAFT POSITION (CKP) SENSOR REMOVAL/INSTALLATION [L3 WITH TC]

E6U014011431W02

Removal

1. Perform the following procedure to allow for enough working space.
   (1) Remove the Front wheel (RH).
   (2) Remove the splash shield.
2. Disconnect the CKP sensor connector.
3. Remove the installation bolts to remove the CKP sensor.

Installation

Caution

- **When foreign material, such as an iron chips, gets on the CKP sensor, it can cause abnormal output from the sensor because of flux turbulence and adversely affect engine control. Be sure there is no foreign material on the CKP sensor when replacing.**

1. Perform the following procedure so that piston No.1 is at the top dead center.
   (1) Remove the drive shaft (RH). (See 03–13–16 FRONT DRIVE SHAFT REMOVAL/INSTALLATION [L3, L3 WITH TC].)
   (2) Remove the cylinder block lower blind plug and install the **SST**.
   (3) Turn the crankshaft pulley to the clockwise until it stops.

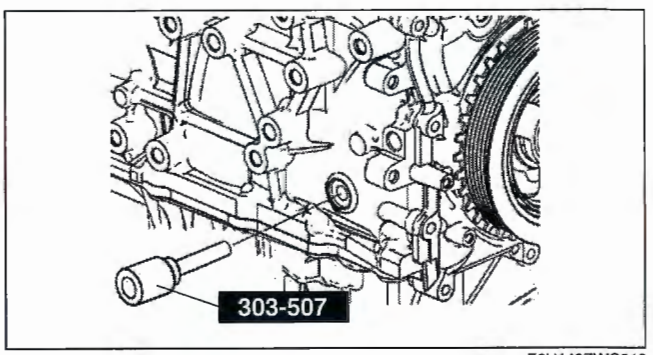

E6U140ZWC010

Using a straight edge, draw a straight line directly in the center of the twentieth tooth of the crankshaft pulley pulse wheel (counting counterclockwise from the empty space).

Caution

- **If the line is not accurately drawn, ignition timing, fuel injection and other engine control systems will be adversely effected. Draw the straight line carefully using a straight edge.**

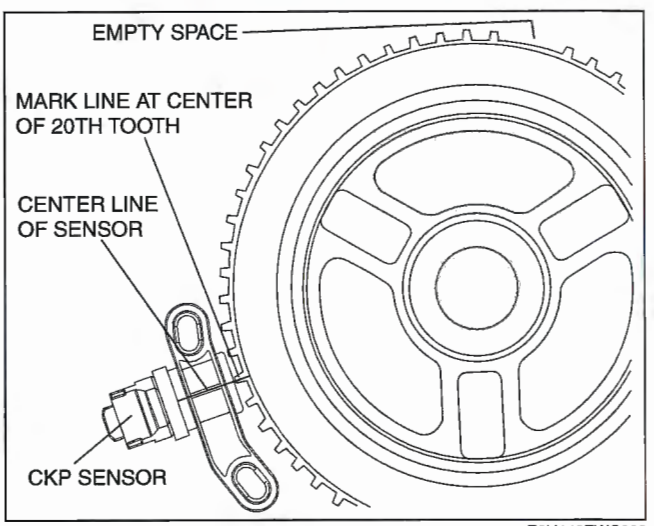

E6U140ZWC009

3. Align the center line of the crankshaft position sensor and the line drawn in Step 2, then install the sensor.
4. Install the CKP sensor fitting bolts.

Tightening torque
5.5—7.5 N·m {56—76 kgf·cm, 49—66 in·lbf}

5. Remove the **SST** then install the cylinder block lower blind plug.

Tightening torque
18—22 N·m {1.9—2.2 kgf·m, 14—16 ft·lbf}

6. Install the front drive shaft (RH). (See 03–13–16 FRONT DRIVE SHAFT REMOVAL/INSTALLATION [L3, L3 WITH TC].)

HEATED OXYGEN SENSOR (HO2S) INSPECTION [L3 WITH TC]

E6U014018860W04

Note
- Before performing the following inspection, make sure to follow the troubleshooting flowchart.

Front HO2S Current Inspection
1. Warm up the engine to normal operating temperature.
2. Using the WDS or equivalent, monitor the following:
   — Vehicle speed (PID: VSS)
   — Engine speed (PID: RPM)
   — Front HO2S current (PID: O2S11)
3. Drive the vehicle and decelerate the engine speed by releasing the accelerator pedal fully when the engine speed is **3,000 rpm or more**.
4. Verify that the front HO2S current (PID: O2S11) is **0.25 mA or more** while decelerating as shown in the figure.

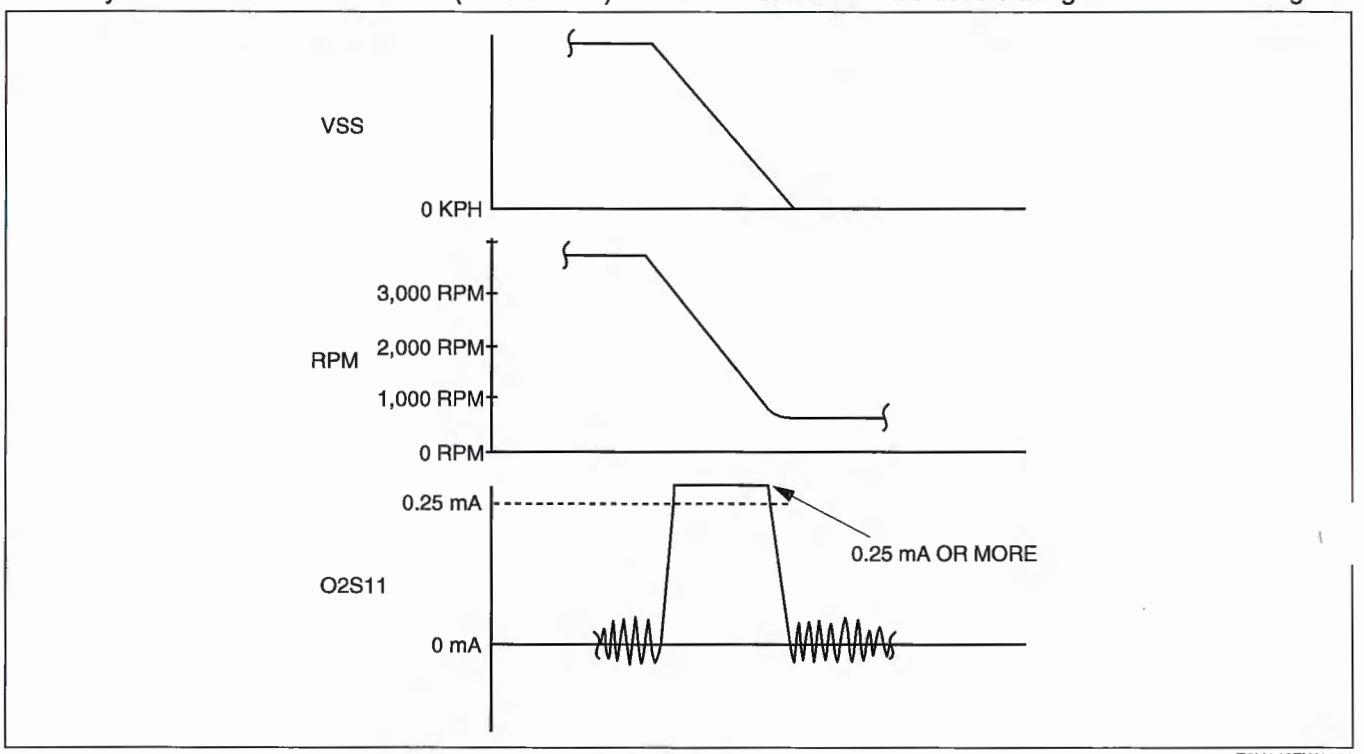

E6U140ZW1001

- If not within the specification, inspect the HO2S for an open or short circuit. (See 01–40B–43 Front HO2S circuit open/short inspection (sensor).) Then if there is no malfunction in the wiring harness, replace the front HO2S.

Front HO2S heater resistance inspection
1. Disconnect the front HO2S connector.
2. Measure the resistance between front HO2S terminals 2B and 2D.
   - If not within the specification, replace the front HO2S. (See 01–15B–2 EXHAUST SYSTEM REMOVAL/INSTALLATION [L3 WITH TC].)

Front HO2S heater resistance
1—10 ohms

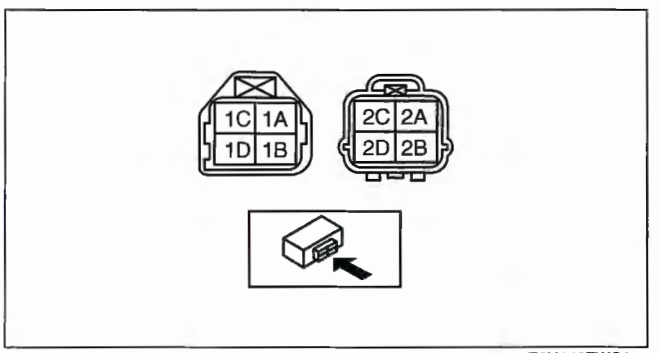

E6U140ZWC

Front HO2S circuit open/short inspection (sensor)

1. Disconnect the PCM connector.
2. Disconnect the front HO2S connector.
   Inspect the following wiring harnesses for an open or short circuit. (Continuity inspection)

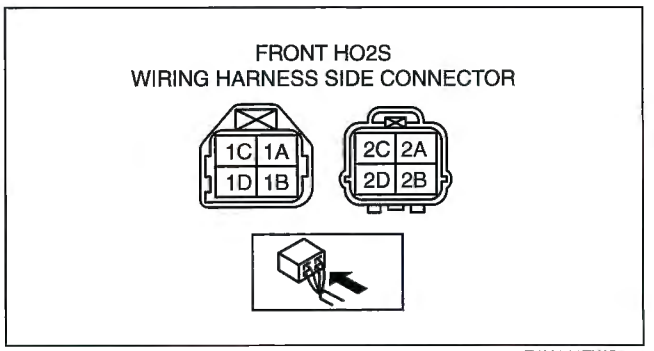

E6U140ZWC312

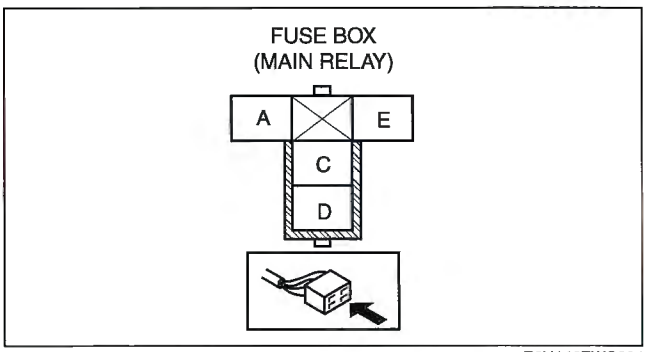

E6U140ZWC304

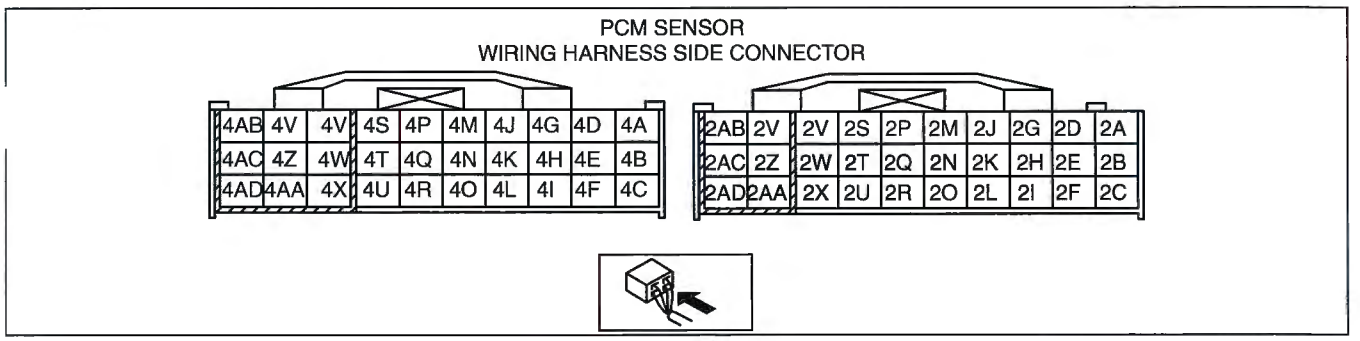

E6U140ZWC313

Open circuit

- If there is no continuity in the following wiring harnesses, there is an open circuit. Repair or replace the wiring harness.
  - — Front HO2S terminal 1A and PCM terminal 2D
  - — Front HO2S terminal 1B and PCM terminal 2G
  - — Front HO2S terminal 1C and PCM terminal 2J
  - — Front HO2S terminal 2A and PCM terminal 2H
  - — Front HO2S terminal 2B and main relay terminal C
  - — Front HO2S terminal 2C and PCM terminal 2M
  - — Front HO2S terminal 2D and PCM terminal 4AD

Short circuit

- If there is continuity in the following wiring harnesses, there is a short circuit. Repair or replace the wiring harness.
  - — Front HO2S terminal 1A and body ground
  - — Front HO2S terminal 1A and power supply
  - — Front HO2S terminal 1B and body ground
  - — Front HO2S terminal 1B and power supply
  - — Front HO2S terminal 1C and body ground
  - — Front HO2S terminal 1C and power supply
  - — Front HO2S terminal 2A and power supply
  - — Front HO2S terminal 2B and body ground
  - — Front HO2S terminal 2C and body ground
  - — Front HO2S terminal 2C and power supply
  - — Front HO2S terminal 2D and body ground
  - — Front HO2S terminal 2D and power supply

Rear HO2S voltage inspection

1. Warm up the engine to normal operating temperature.
2. Using the WDS or equivalent, monitor the following:
   — Vehicle speed (PID: VSS)
   — Engine speed (PID: RPM)
   — Rear HO2S voltage (PID: O2S12)
3. Drive the vehicle and decelerate the engine speed by releasing the accelerator pedal fully when the engine speed is **3,000 rpm or more**.
4. Verify that the rear HO2S outputs a voltage of **0.6 V or more**, one time or more, then verify that the rear HO2S voltage (PID: O2S12) is **0.3 V or less** while decelerating as shown in the figure.

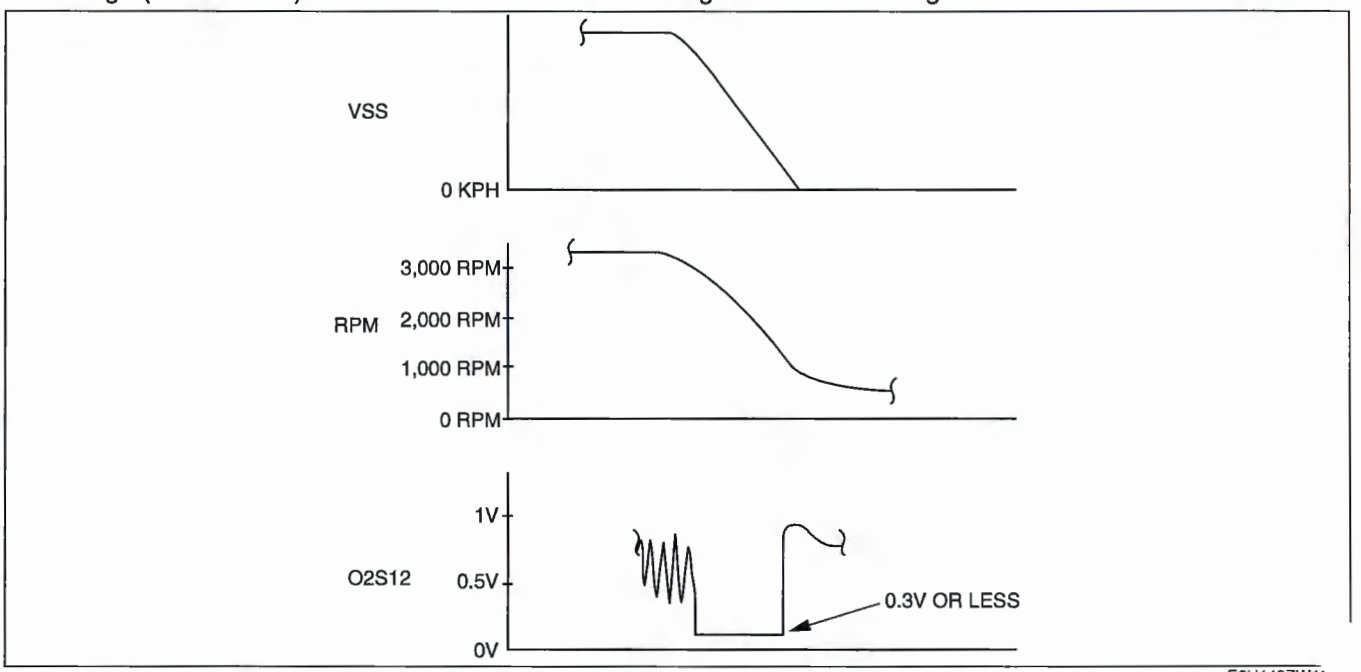

E6U140ZW1

- If not within the specification, inspect the HO2S for an open or short circuit. (See 01–40B–44 Rear HO2S circuit open/short inspection (sensor).) Then if there is no malfunction in the wiring harness, replace the rear HO2S.

Rear HO2S circuit open/short inspection (sensor)

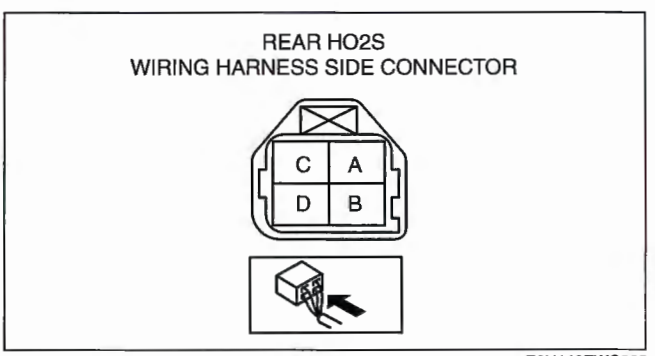

E6U140ZWC005

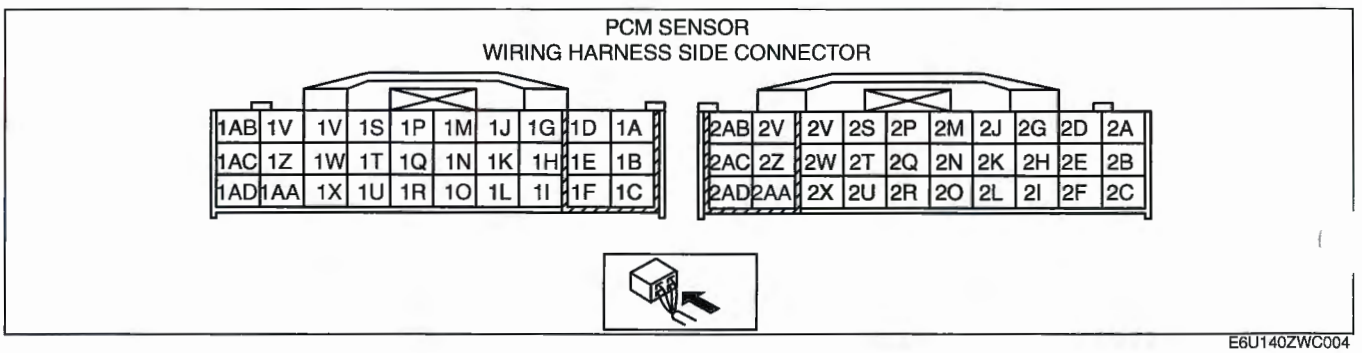

E6U140ZWC004

1. Disconnect the PCM connector.
2. Disconnect the rear HO2S connector.
3. Inspect the following wiring harnesses for an open or short circuit. (Continuity inspection)

`en circuit

If there is no continuity, there is an open circuit. Repair or replace the wiring harness.
— Rear HO2S terminal A and PCM terminal 1Y
— Rear HO2S terminal B and PCM terminal 2H

Short circuit

- If there is continuity, there is a short circuit. Repair or replace the wiring harness.
  — Rear HO2S terminal A and body ground
  — Rear HO2S terminal A and power supply
  — Rear HO2S terminal B and power supply

Rear HO2S heater resistance inspection

1. Disconnect the rear HO2S connector.
2. Measure the rear HO2S resistance between terminals C and D.
   - If not within the specification, replace the HO2S.

Rear HO2S heater resistance
2—50 ohms

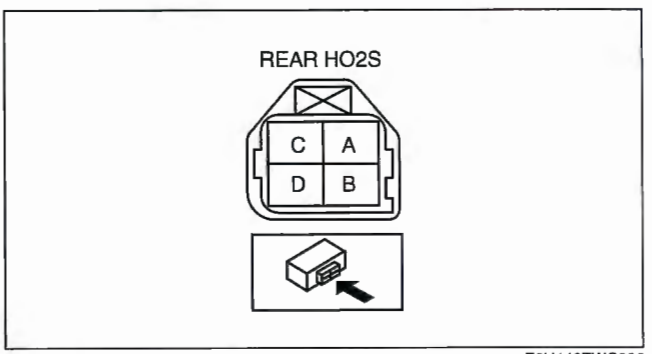

E6U140ZWC006

Rear HO2S circuit open/short inspection (heater)

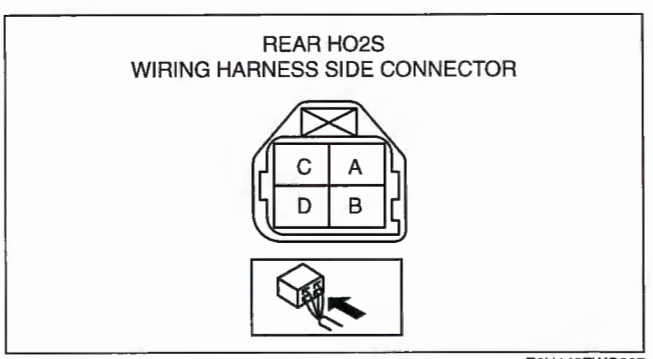

E6U140ZWC007

1. Disconnect the PCM connector.
2. Disconnect the rear HO2S connector.
3. Inspect the following wiring harnesses for an open or short circuit. (Continuity inspection)

Open circuit

- If there is no continuity, there is an open circuit. Repair or replace the wiring harness.
  — Rear HO2S terminal C and ignition switch
  — Rear HO2S terminal D and PCM terminal 4Z

Short circuit

- If there is no continuity, there is a short circuit. Repair or replace the wiring harness.

Rear

— Rear HO2S terminal C and body ground
— Rear HO2S terminal D and power supply
— Rear HO2S terminal D and body ground

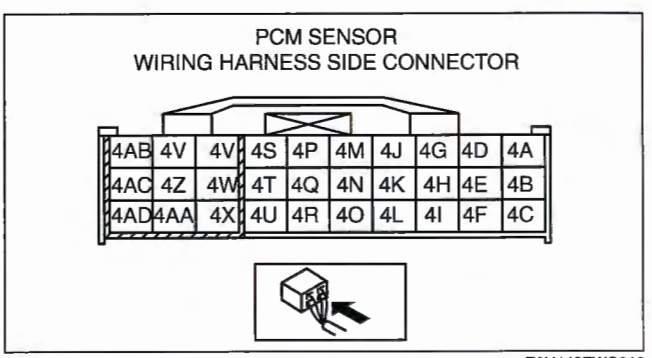

E6U140ZWC316

01–40C CONTROL SYSTEM [AJ]

CONTROL SYSTEM COMPONENT LOCATION INDEX [AJ] 01–40C–2
CONTROL SYSTEM DIAGRAM [AJ] 01–40C–3
CONTROL SYSTEM WIRING DIAGRAM [AJ] 01–40C–4
PCM REMOVAL/INSTALLATION [AJ] 01–40C–5
PCM INSPECTION [AJ] 01–40C–6
Freeze Frame Data Monitor Table 01–40C–13
Terminal Voltage Table (Reference) 01–40C–14
Inspection Using An Oscilloscope (Reference) 01–40C–20
PCM REPLACEMENT [AJ] 01–40C–23
CLUTCH PEDAL POSITION (CPP) SWITCH INSPECTION [AJ] 01–40C–23
Continuity Inspection 01–40C–23
Circuit Open/Short Inspection 01–40C–24
NEUTRAL SWITCH INSPECTION [AJ] 01–40C–24
Continuity Inspection 01–40C–24
Circuit Open/Short Inspection 01–40C–25
POWER STEERING PRESSURE (PSP) SWITCH INSPECTION [AJ] 01–40C–25
Continuity Inspection 01–40C–25
Circuit Open/Short Inspection 01–40C–26
ACCELERATOR PEDAL POSITION (APP) SENSOR INSPECTION [AJ] 01–40C–26
Circuit Open/Short Inspection 01–40C–27
THROTTLE POSITION (TP) SENSOR INSPECTION [AJ] 01–40C–28
Circuit Open/Short Inspection 01–40C–28
ENGINE COOLANT TEMPERATURE (ECT) SENSOR REMOVAL/INSTALLATION [AJ] 01–40C–29
ENGINE COOLANT TEMPERATURE(ECT) SENSOR INSPECTION [AJ] 01–40C–29
Resistance Inspection 01–40C–29
Circuit Open/Short Inspection 01–40C–30
INTAKE AIR TEMPERATURE (IAT) SENSOR INSPECTION [AJ] 01–40C–31
Resistance Inspection 01–40C–31
Circuit Open/Short Inspection 01–40C–31
MASS AIR FLOW (MAF) SENSOR INSPECTION [AJ] 01–40C–32
Visual Inspection 01–40C–32
MAF Rate and Load Value 01–40C–32
Circuit Open/Short Inspection 01–40C–33
HEATED OXYGEN SENSOR (HO2S) INSPECTION [AJ] 01–40C–33
HO2S voltage inspection 01–40C–33
HO2S circuit open/short inspection (sensor) 01–40C–34
HO2S heater resistance inspection 01–40C–35
HO2S circuit open/short inspection (heater) 01–40C–36
EGR BOOST SENSOR INSPECTION [AJ] 01–40C–37
Voltage Inspection 01–40C–37
Circuit Open/Short Inspection 01–40C–37
KNOCK SENSOR (KS) REMOVAL/INSTALLATION [AJ] 01–40C–38
KNOCK SENSOR (KS) INSPECTION [AJ] 01–40C–38
Resistance Inspection 01–40C–38
Circuit Open/Short Inspection 01–40C–38
CAMSHAFT POSITION (CMP) SENSOR REMOVAL/INSTALLATION [AJ] 01–40C–39
CAMSHAFT POSITION (CMP) SENSOR INSPECTION [AJ] 01–40C–39
Resistance Inspection 01–40C–39
Circuit Open/Short Inspection 01–40C–40
CRANKSHAFT POSITION (CKP) SENSOR REMOVAL/INSTALLATION [AJ] 01–40C–40
CRANKSHAFT POSITION (CKP) SENSOR INSPECTION [AJ] 01–40C–41
Resistance Inspection 01–40C–41
Circuit Open/Short Inspection 01–40C–41

CONTROL SYSTEM COMPONENT LOCATION INDEX [AJ]

E6U014018881W01

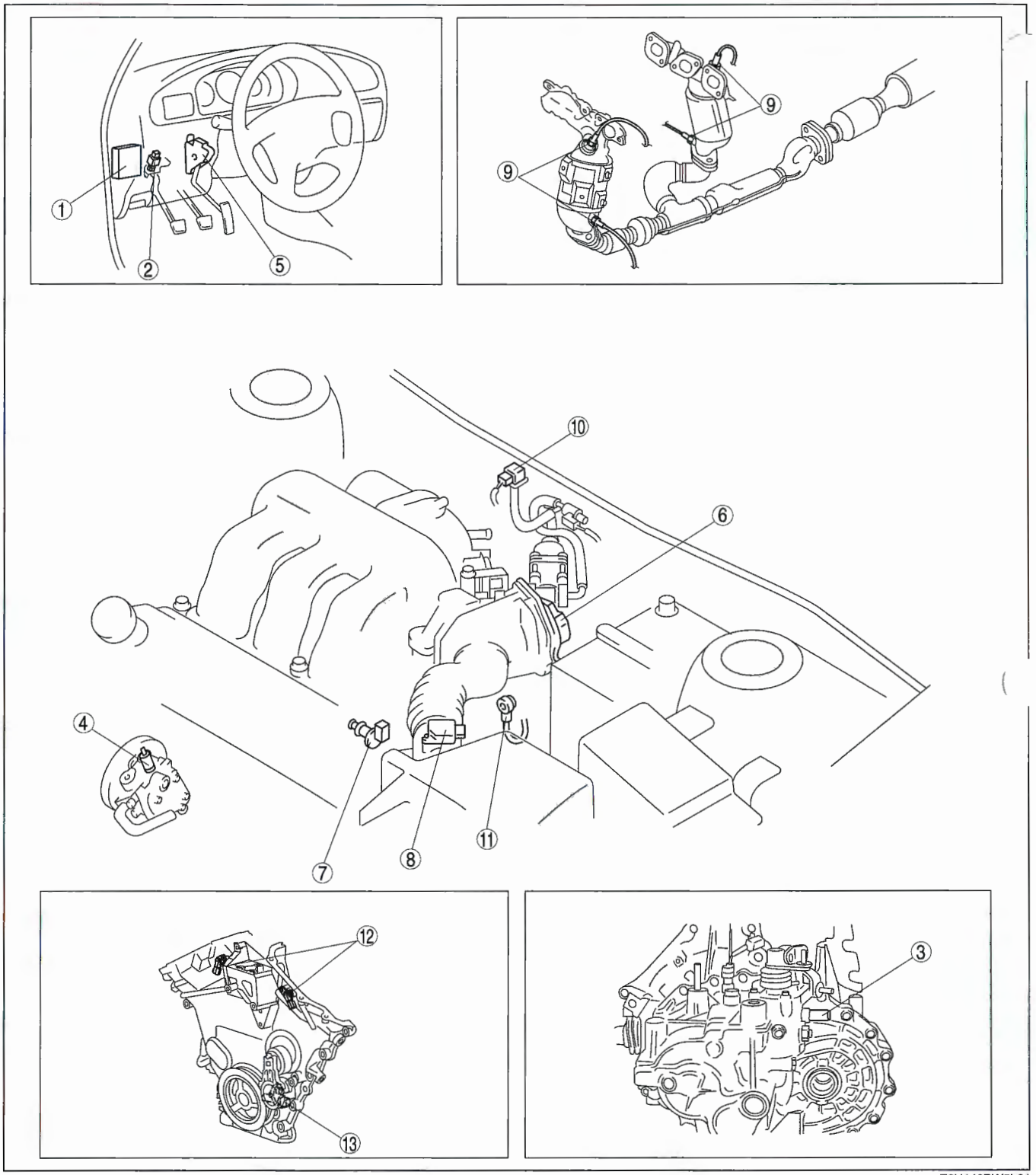

E6U140BW5L01

1	PCM (See 01–40C–5 PCM REMOVAL/INSTALLATION [AJ].) (See 01–40C–6 PCM INSPECTION [AJ].) (See 01–40C–23 PCM REPLACEMENT [AJ].)
2	Clutch switch (MTX) (See 01–40C–23 CLUTCH PEDAL POSITION (CPP) SWITCH INSPECTION [AJ].)

3	Neutral switch (MTX) (See 01–40C–24 NEUTRAL SWITCH INSPECTION [AJ].)
4	PSP switch (See 01–40C–25 POWER STEERING PRESSUR (PSP) SWITCH INSPECTION [AJ].)
5	APP sensor (See 01–40C–26 ACCELERATOR PEDAL POSITION (APP) SENSOR INSPECTION [AJ].)

6	TP sensor and throttle actuator (See 01–40C–28 THROTTLE POSITION (TP) SENSOR INSPECTION [AJ].) (See 01–13C–6 THROTTLE ACTUATOR INSPECTION [AJ].)
7	ECT sensor (See 01–40C–29 ENGINE COOLANT TEMPERATURE (ECT) SENSOR REMOVAL/INSTALLATION [AJ].) (See 01–40C–29 ENGINE COOLANT TEMPERATURE (ECT) SENSOR INSPECTION [AJ].)
8	MAF/IAT sensor (See 01–40C–31 INTAKE AIR TEMPERATURE (IAT) SENSOR INSPECTION [AJ].) (See 01–40C–32 MASS AIR FLOW (MAF) SENSOR INSPECTION [AJ].)
9	HO2S (See 01–40C–33 HEATED OXYGEN SENSOR (HO2S) INSPECTION [AJ].) (See 01–40C–33 HEATED OXYGEN SENSOR (HO2S) INSPECTION [AJ].)
10	EGR boost sensor (See 01–40C–37 EGR BOOST SENSOR INSPECTION [AJ].)
11	KS (See 01–40C–38 KNOCK SENSOR (KS) REMOVAL/INSTALLATION [AJ].) (See 01–40C–38 KNOCK SENSOR (KS) INSPECTION [AJ].)
12	CMP sensor (See 01–40C–39 CAMSHAFT POSITION (CMP) SENSOR REMOVAL/INSTALLATION [AJ].) (See 01–40C–39 CAMSHAFT POSITION (CMP) SENSOR INSPECTION [AJ].)
13	CKP sensor (See 01–40C–40 CRANKSHAFT POSITION (CKP) SENSOR REMOVAL/INSTALLATION [AJ].) (See 01–40C–40 CRANKSHAFT POSITION (CKP) SENSOR REMOVAL/INSTALLATION [AJ].)

CONTROL SYSTEM DIAGRAM [AJ]

E6U014018881W02

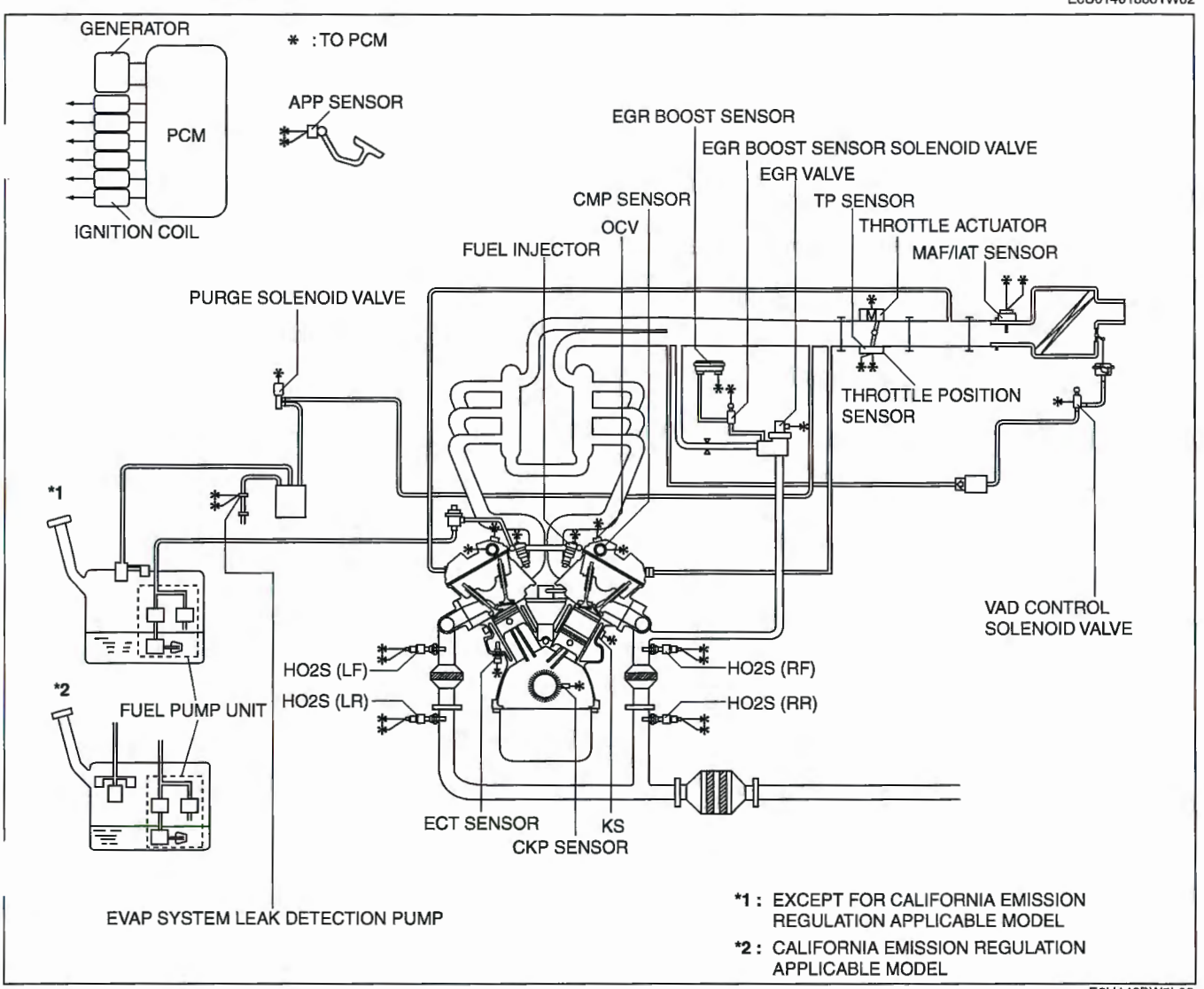

E6U140BW5L02

CONTROL SYSTEM WIRING DIAGRAM [AJ]

E6U014018881W03

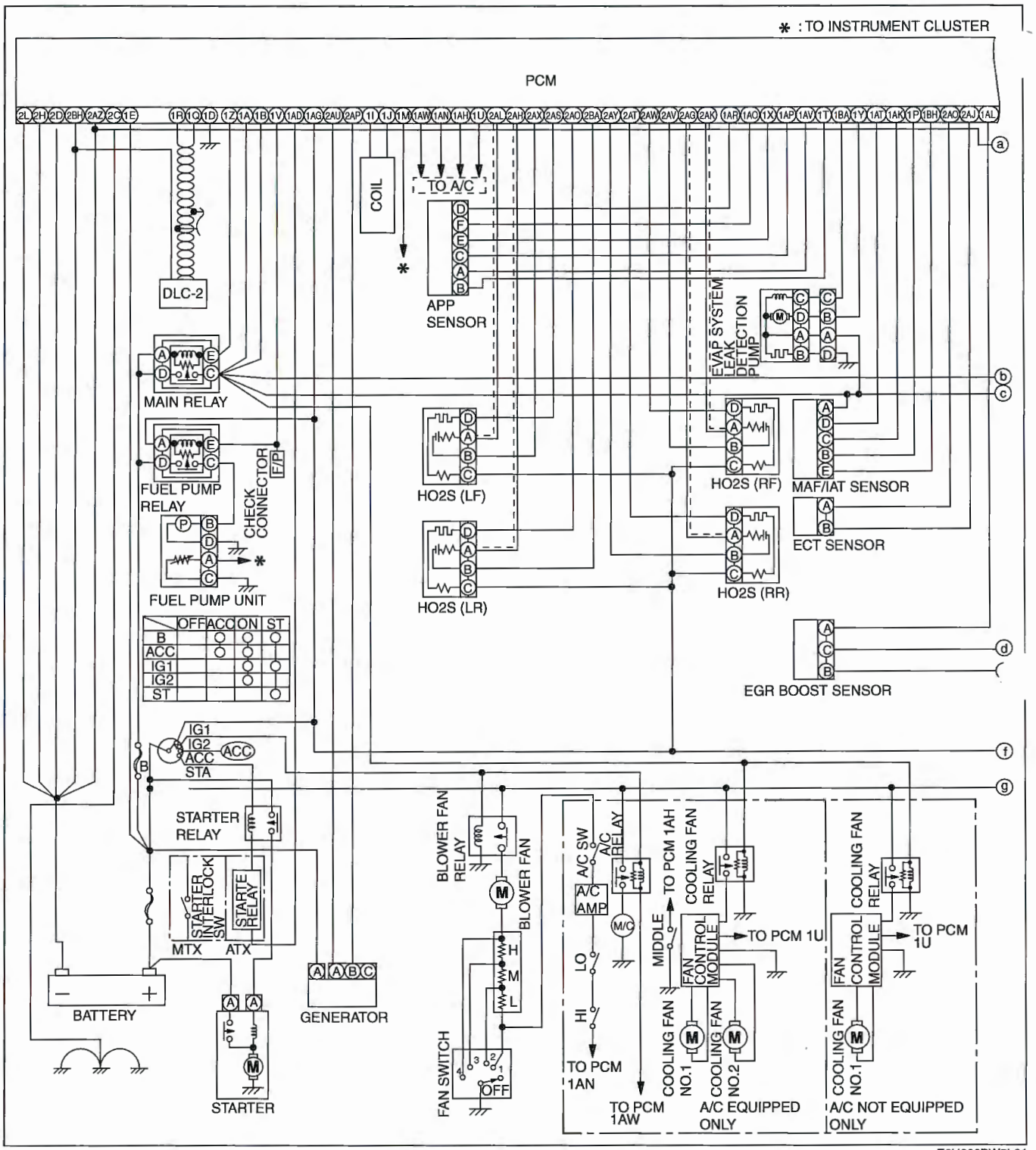

E6U000BW5L01

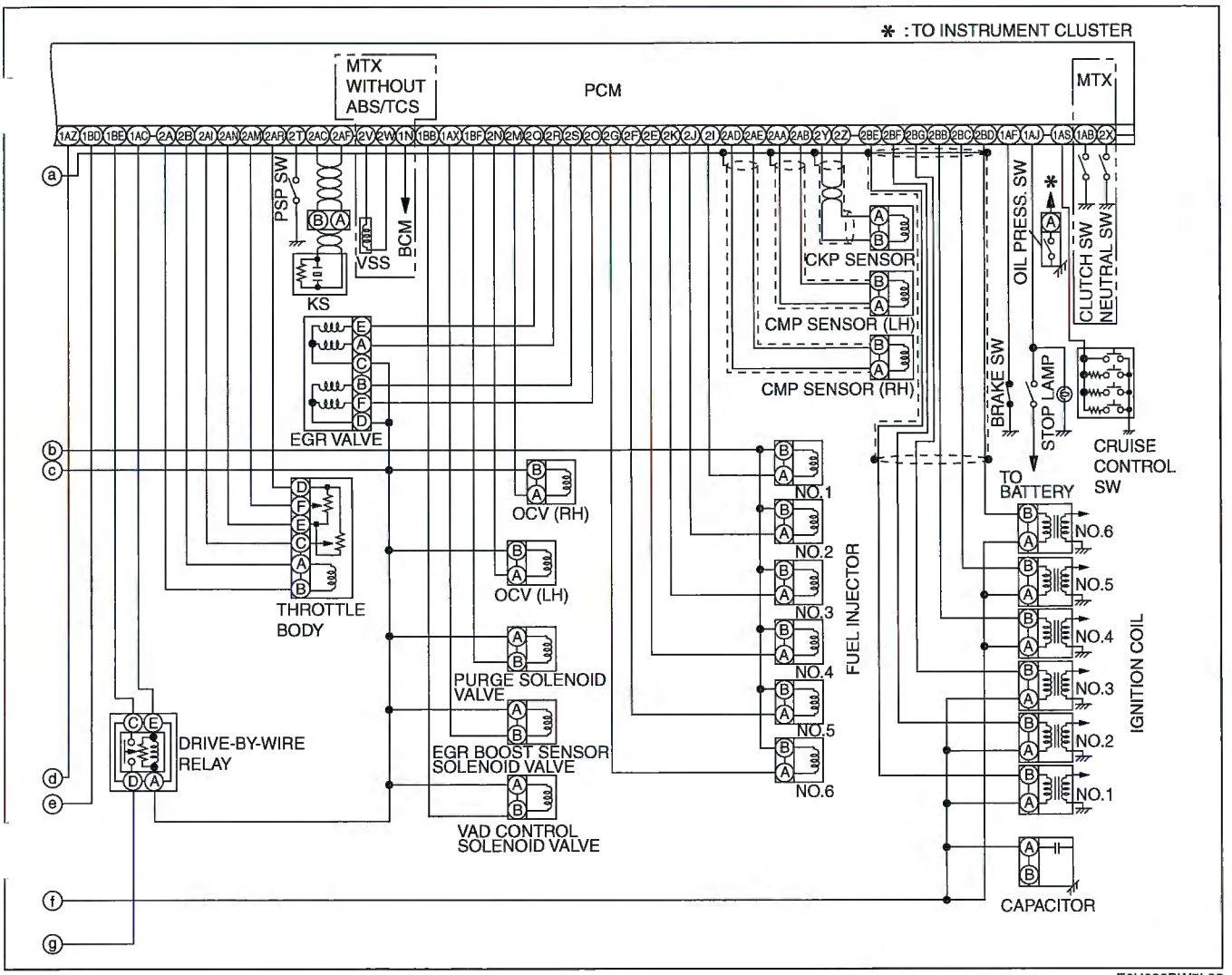

E6U000BW5L02

PCM REMOVAL/INSTALLATION [AJ]

E6U014018880W01

Note

- To replace the PCM, connect the WDS and perform the PCM configuration. (See 01–40C–23 PCM REPLACEMENT [AJ].)

1. Disconnect the negative battery cable.
2. Remove in the order indicated in the table.
3. Install in the reverse order of removal.

1	PCM connector
2	PCM

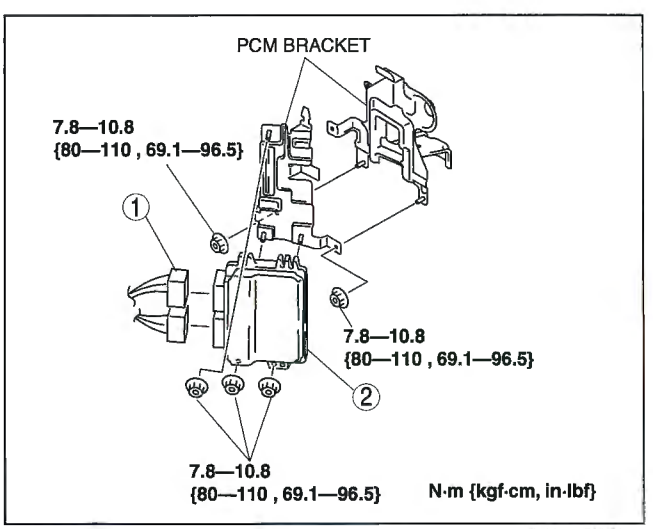

E6U140BW5L03

PCM INSPECTION [AJ]

1. Connect the WDS or equivalent to the DLC-2.
2. Turn the ignition switch to ON position.
3. Measure the PID value.
   - If PID value is not within the specification, follow the instructions in Action column.

E6U014018880W02

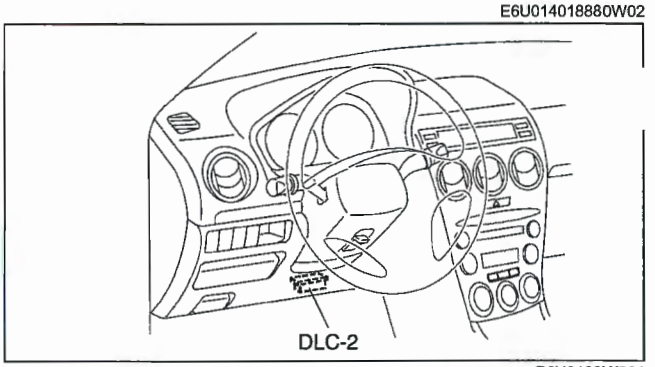

B6U0102W501

PID/DATA MONITOR table (Reference)

Monitor item (Definition)	Unit/ Condition	Condition/Specification (Reference)	Inspection item (s)	PCM terminal
AAT (Ambient air temperature)	°C or °F	Ignition switch at ON position: Indicate the ambient air temperature	• IAT sensor (See 01–40C–31 INTAKE AIR TEMPERATURE (IAT) SENSOR INSPECTION [AJ].)	—
AC REQ (A/C switch)	On/Off	A/C switch and fan switch ON at ignition switch ON: On A/C switch OFF at ignition switch ON: Off	• A/C switch (See 07–40–33 CLIMATE CONTROL UNIT INSPECTION [L3, AJ].) • Refrigerant pressure switch (See 07–10–4 REFRIGERANT PRESSURE CHECK [L3, AJ].)	1AN
ACCS (A/C relay)	On/Off	A/C is operating: On Ignition switch is ON: Off	• Inspect following PIDs: ECT, RPM, TP REL • A/C switch (See 07–40–33 CLIMATE CONTROL UNIT INSPECTION [L3, AJ].)	1AW
ALTF (Generator field coil control duty value)	%	Ignition switch is ON: 0% Idling, E/L is operating: Duty value rises	• Inspect following PIDs: ALTT V, ECT, IAT, RPM	2AP
ALTT V (Generator output voltage)	V	Ignition switch is ON: 0 V Idling: 14—16 V	• Generator (See 01–17A–5 GENERATOR INSPECTION [L3, AJ].)	2AU
APP (Accelerator pedal position)	%	CTP: Approx. 0% WOT: Approx. 99.2%	• Inspect following PIDs: APP1, APP2 • APP sensor (See 01–40C–26 ACCELERATOR PEDAL POSITION (APP) SENSOR INSPECTION [AJ].)	1AP, 1AO
APP1 (APP sensor No.1)	%	AP is released: 31.0—32.4% AP is depressed: 69.8—81.8%	• APP sensor (See 01–40C–26 ACCELERATOR PEDAL POSITION (APP) SENSOR INSPECTION [AJ].)	1AO
	V	AP is released: 1.55—1.62 V AP is depressed: 3.49—4.09 V		
APP2 (APP sensor No.2)	%	AP is released: 20.2—21.4% AP is depressed: 58.8—70.8%	• APP sensor (See 01–40C–26 ACCELERATOR PEDAL POSITION (APP) SENSOR INSPECTION [AJ].)	1AP
	V	AP is released: 1.01—1.07 V AP is depressed: 2.94—3.54 V		

Monitor item (Definition)	Unit/ Condition	Condition/Specification (Reference)	Inspection item (s)	PCM terminal
ARPMDES (Target engine speed)	RPM	Idling (no load): 700—800 RPM	• Inspect following PIDs: ALTT V, ECT, IAT, INGEAR, MAF, MAP, RPM, PSP, TP REL • CKP sensor (See 01–40C–41 CRANKSHAFT POSITION (CKP) SENSOR INSPECTION [AJ].)	—
BARO (Barometric pressure)	kPa, Bar, psi	Ignition switch is ON at sea level: Approx. 101 kPa {1.01 Bar, 14.6 psi}	• EGR boost sensor (See 01–40C–37 EGR BOOST SENSOR INSPECTION [AJ].)	1AL
	V	Ignition switch is ON at sea level: Approx. 4.1 V		
BARO/EGR (EGR boost sensor solenoid valve)	On/Off	Ignition switch is ON: Off Idling: Off	• EGR boost sensor solenoid valve (See 01–16A–20 EGR BOOST SENSOR SOLENOID VALVE INSPECTION [AJ].)	1AX
BOO (Brake switch No.1)	On/Off	Brake pedal is depressed: On Brake pedal is released: Off	• Brake switch (See 04–11–9 BRAKE SWITCH INSPECTION.)	1AJ
BPA (Brake switch No.2)	On/Off	Brake pedal is depressed: Off Brake pedal is released: On	• Brake switch (See 04–11–9 BRAKE SWITCH INSPECTION.)	1AF
CATT11_DSD (Estimated catalytic converter temperature)	°C or °F	Idling after warm-up: indicate the WU-TWC (RH) forecast temperature	• Perform applicable DTC troubleshooting (See 01–02C–13 DTC TABLE [AJ].)	—
CATT21_DSD (Estimated catalytic converter temperature)	°C or °F	Idling after warm-up: indicate the WU-TWC (LH) forecast temperature	• Perform applicable DTC troubleshooting (See 01–02C–13 DTC TABLE [AJ].)	—
CHRGLP (Generator warning light)	On/Off	Ignition switch is ON: On Idling: Off	• Perform applicable DTC troubleshooting (See 01–02C–13 DTC TABLE [AJ].)	—
COLP (Refrigerant pressure switch (middle))	On/Off	Idling, refrigerant pressure switch (middle) is on: On Idling, refrigerant pressure switch (middle) is off: Off	• Refrigerant pressure switch (See 07–10–4 REFRIGERANT PRESSURE CHECK [L3, AJ].)	1AH
CPP*1 (Clutch pedal position)	On/Off	Clutch pedal is depressed: On Clutch pedal is released: Off	• Clutch switch (See 01–40C–23 CLUTCH PEDAL POSITION (CPP) SWITCH INSPECTION [AJ].)	1AB
CPP/PNP*1 (Shift lever position)	Neutral/ Drive	Gear is neutral position: Neutral Gear is not neutral position: Drive	• Neutral switch (See 01–40C–24 NEUTRAL SWITCH INSPECTION [AJ].)	2X
DTCCNT (Number of DTC detected)	—	—	• Perform applicable DTC troubleshooting. (See 01–02C–13 DTC TABLE [AJ].)	—
ECT (Engine coolant temperature)	°C or °F	Indicate the engine coolant temperature	• ECT sensor (See 01–40C–29 ENGINE COOLANT TEMPERATURE (ECT) SENSOR INSPECTION [AJ].)	2AQ
	V	ECT is 20 °C {68 °F}: 2.9—3.1 V After warm-up: 0.2—1.0 V		
)_RAT11_DSD (Front oxygen sensor)	—	Idling after warm-up: Approx. 1	• Perform applicable DTC troubleshooting (See 01–02C–13 DTC TABLE [AJ].)	—

Monitor item (Definition)	Unit/ Condition	Condition/Specification (Reference)	Inspection item (s)	PCM terminal
ETC_ACT (Electronic throttle control actual)	°	Accelerator pedal is released: Approx. 7.4° Accelerator pedal is released: Approx. 74.3°	• TP sensor (See 01–40C–28 THROTTLE POSITION (TP) SENSOR INSPECTION [AJ].)	2AI, 2AM
ETC_DSD (Electronic throttle control desired)	%	Throttle valve is closed → open: PID value changes smoothly	• Inspect following PIDs: APP1, APP2, ETC ACT • TP sensor (See 01–40C–28 THROTTLE POSITION (TP) SENSOR INSPECTION [AJ].)	2AI, 2AM
	°	Accelerator pedal is released: Approx. 0° Accelerator pedal is released: Approx. 74°		
EVAPCP (Purge solenoid valve duty value)	%	Ignition switch is ON: 0%	• Inspect following PIDs: BARO, ECT, IAT, MAF, O2S11, O2S21, RPM, TP REL	1BF
FAN_DUTY (Fan control signal)	%	ECT is below 100 °C {212 °F}: 0% ECT is above 100 °C {212 °F}: 50—100%	• Inspect following PIDs: COLP, ECT	1U
FLI (Fuel level)	%	—	—	—
FP (Fuel pump relay)	On/Off	Ignition switch is ON: Off Idling: On Cranking: On	• Inspect following PID: RPM • Fuel pump relay (See 09–21–7 RELAY INSPECTION.)	1V
FUELPW (Fuel injection duration)	ms	Ignition switch is ON: 0 ms Idling: 1.5—3.0 ms	• Inspect following PIDs: ACSW, ALTT V, ECT, IAT, INGEAR, MAF, MAP, O2S11, O2S12, O2S21, O2S22, PSP, RPM, TP REL, VBAT • Fuel injector (See 01–14A–32 FUEL INJECTOR INSPECTION [AJ].)	2G, 2E, 2J, 2F, 2K, 2I
FUEL SYS1 (Fuel system status)	OL/CL/ OL-Drive/ OL-Fault/ CL-Fault	Ignition switch is ON: CL Idling after warm-up: CL	• Inspect following PIDs: ALTT V, ECT, IAT, INGEAR, MAF, MAP, O2S11, O2S12, O2S21, O2S22, PSP, RPM, TP REL • Fuel injector (See 01–14A–32 FUEL INJECTOR INSPECTION [AJ].)	—
FUEL SYS2 (Fuel system status)	OL/CL/ OL-Drive/ OL-Fault/ CL-Fault	Ignition switch is ON: CL Idling after warm-up: CL	• Inspect following PIDs: ALTT V, ECT, IAT, INGEAR, MAF, MAP, O2S11, O2S12, O2S21, O2S22, PSP, RPM, TP REL • Fuel injector (See 01–14A–32 FUEL INJECTOR INSPECTION [AJ].)	—
GENVDSD (Generator voltage desired)	V	Ignition switch is ON: 0 V Idling, E/L is not operating: Approx. 14.9 V	• Perform applicable DTC troubleshooting (See 01–02C–13 DTC TABLE [AJ].)	—
HTR11 (HO2S heater (RF))	On/Off	Idle after warm-up: On and Off	• Inspect following PIDs: ECT, MAF, RPM, TP REL	2AW
HTR12 (HO2S heater (RR))	On/Off	Idling: On Engine speed is above 4,000 rpm: Off	• Inspect following PIDs: ECT, MAF, RPM, TP REL	2AT
HTR21 (HO2S heater (LF))	On/Off	Idle after warm-up: On and Off	• Inspect following PIDs: ECT, MAF, RPM, TP REL	2AS
HTR22 (HO2S heater (LR))	On/Off	Idling: On Engine speed is above 4,000 rpm: Off	• Inspect following PIDs: ECT, MAF, RPM, TP REL	2AO

Monitor item (Definition)	Unit/ Condition	Condition/Specification (Reference)	Inspection item (s)	PCM terminal
.SV (VAD control solenoid valve)	On/Off	TP opening angle is less than 60% and engine speed is 6,000 rpm or above: On TP opening angle is 60% or above and engine speed is 4,800 rpm or above: On Others: Off	• Inspect following PIDs: ECT, RPM, TP REL	1BB
IAT (Intake air temperature)	°C or °F	Indicate the intake-air temperature	• IAT sensor (See 01–40C–31 INTAKE AIR TEMPERATURE (IAT) SENSOR INSPECTION [AJ].)	1AT
	V	IAT is 20 °C {68 °F}: 2.4—2.6 V IAT is 30 °C {86 °F}: 1.7—1.9 V		
INGEAR*1 (Load/no load condition)	On/Off	Gear is not neutral position and clutch pedal is released: On Gear is neutral position: Off Clutch pedal is depressed: Off	• Inspect following PIDs: CPP, CPP/PNP • Perform applicable DTC troubleshooting. (See 01–02C–13 DTC TABLE [AJ].)	1AB, 2X
IVS (CTP condition)	Idle/Off Idle	CTP: Idle Others: Off Idle	• Perform applicable DTC troubleshooting (See 01–02C–13 DTC TABLE [AJ].)	2AI, 2AM
KNOCKR (Knocking retard)	°	Ignition switch is ON: 0 ° Idling: 0 °	• KS (See 01–40C–38 KNOCK SENSOR (KS) INSPECTION [AJ].)	2AF, 2AC
LDP_EVAPCP (EVAP system leak detection pump detect incorrect ·rge flow)	mA	Indicate the EVAP control system incorrect purge flow detection value	• Perform applicable DTC troubleshooting (See 01–02C–13 DTC TABLE [AJ].)	—
·P_IDL (EVAP system leak detection pump idle current)	mA	Indicate the EVAP system leak detection pump idle current	• Perform applicable DTC troubleshooting (See 01–02C–13 DTC TABLE [AJ].)	—
LDP_MON (EVAP system leak detection pump monitoring current)	mA	Indicate the EVAP system leak detection pump monitoring current	• Perform applicable DTC troubleshooting (See 01–02C–13 DTC TABLE [AJ].)	—
LDP_REF (EVAP system leak detection pump reference current)	mA	Indicate the EVAP system leak detection pump reference current	• Perform applicable DTC troubleshooting (See 01–02C–13 DTC TABLE [AJ].)	—
LDP_SLDV (EVAP system small leak detection value)	mA	Indicate the EVAP control system small leak detection value	• Perform applicable DTC troubleshooting (See 01–02C–13 DTC TABLE [AJ].)	—
LDP_VSL_FV*2 (EVAP system small leak detection value)	mA/sec	Indicate the EVAP control system vary small leak detection value	• Perform applicable DTC troubleshooting. (See 01–02C–13 DTC TABLE [AJ].)	—
LDP_VSL_SV*2 (EVAP system small leak detection value)	mA/sec	Indicate the EVAP control system vary small leak detection value	• Perform applicable DTC troubleshooting. (See 01–02C–13 DTC TABLE [AJ].)	—
LDP_VSLDV*2 (EVAP system small leak detection value)	mA/sec	Indicate the EVAP control system vary small leak detection value	• Perform applicable DTC troubleshooting (See 01–02C–13 DTC TABLE [AJ].)	—

Monitor item (Definition)	Unit/ Condition	Condition/Specification (Reference)	Inspection item (s)	PCM terminal
LOAD (Engine load)	%	**MTX** Idling: Approx. 16.8% Engine speed is 2,500 rpm: Approx. 14.6% **ATX** Idling: Approx. 17.5% Engine speed is 2,500 rpm: Approx. 15.2%	• Inspect following PIDs: ECT, IAT, MAF, MAP, RPM, TP REL	—
LONGFT1 (Long term fuel trim (RH))	%	Idling: –20—20%	• Perform applicable DTC troubleshooting (See 01–02C–13 DTC TABLE [AJ].)	—
LONGFT2 (Long term fuel trim (LH))	%	Idling: –20—20%	• Perform applicable DTC troubleshooting (See 01–02C–13 DTC TABLE [AJ].)	—
MAF (Mass airflow)	g/s	**MTX** Idling: 3.6—3.8 g/s Engine speed is 2,500 rpm: 10.5—11.2 g/s **ATX** Idling: 3.8—4.0 g/s Engine speed is 2,500 rpm: 10.6—11.4 g/s	• MAF sensor 01–40C–32 MASS AIR FLOW (MAF) SENSOR INSPECTION [AJ].)	1AK
	V	Idling: Approx. 1.3 V Engine speed is 2,500 rpm: Approx. 1.9 V		
MIL (Malfunction indicator light)	On/Off	Ignition switch is ON: On Idling: Off	• Perform applicable DTC troubleshooting (See 01–02C–13 DTC TABLE [AJ].)	—
MIL_DIS (Travelled distance since the MIL illuminated)	km or mile	No DTC: 0 km {0 mile} DTC detected: Not 0 km {0 mile}	• Perform applicable DTC troubleshooting (See 01–02C–13 DTC TABLE [AJ].)	—
NUMKEYS (Number of keys stored in module)	—	Indicate the number of keys stored in module	—	—
O2S11 (HO2S (RF))	V	Idling after warm-up: 0—1.0 V Acceleration: 0.5—1.0 V Deceleration: 0—0.5 V	• HO2S (RF) (See 01–40C–33 HEATED OXYGEN SENSOR (HO2S) INSPECTION [AJ].)	2AK
O2S12 (HO2S (RR))	V	Ignition switch is ON: 0—1.0 V Idling after warm-up: 0—1.0 V Acceleration: 0.5—1.0 V Deceleration: 0—0.5 V	• HO2S (RR) (See 01–40C–33 HEATED OXYGEN SENSOR (HO2S) INSPECTION [AJ].)	2AG
O2S21 (HO2S (LF))	V	Idling after warm-up: Approx. 0.6 V	• HO2S (LF) (See 01–40C–33 HEATED OXYGEN SENSOR (HO2S) INSPECTION [AJ].)	2AL
O2S22 (HO2S (LR))	V	Idling after warm-up: Approx. 0.6 V	• HO2S (LR) (See 01–40C–33 HEATED OXYGEN SENSOR (HO2S) INSPECTION [AJ].)	2AH
PSP (PSP switch)	High/Low	Steering wheel is in straight ahead position: Low Steering wheel is turned: High	• PSP switch (See 01–40C–25 POWER STEERING PRESSURE (PSP) SWITCH INSPECTION [AJ].)	2T
RFCFLAG (Readiness Function Code)	Learnt/Not Learnt	RFC exists: Learnt No RFC: Not Learnt	• Perform DRIVE MODE 1 (See 01–02C–8 OBD-II DRIVE MODE [AJ].)	—

Monitor item (Definition)	Unit/ Condition	Condition/Specification (Reference)	Inspection item (s)	PCM terminal
RO2FT1 (RO2S (RR) fuel trim)	—	Idling after warm-up: Approx. –0.03—0.03	• Perform applicable DTC troubleshooting (See 01–02C–13 DTC TABLE [AJ].)	—
RO2FT2 (HO2S (RL) fuel trim)	—	Idling after warm-up: Approx. –0.03—0.03	• Perform applicable DTC troubleshooting (See 01–02C–13 DTC TABLE [AJ].)	—
RPM (Engine speed)	RPM	Idling (no load): 700—800 RPM	• CKP sensor (See 01–40C–41 CRANKSHAFT POSITION (CKP) SENSOR INSPECTION [AJ].)	2Z, 2Y
SCCS (Cruise control switch)	V	Press ON/OFF: Approx. 0 V Press CALCEL: Approx. 1.2 V Press SET/COAST: Approx. 3.2 V Press RES/ACCEL: Approx. 4.2 V Others: Approx. 5.0 V	• Cruise control switch (See 01–20A–1 CRUISE CONTROL SWITCH INSPECTION [L3, AJ].)	1AS
SEGRP (EGR valve position)	No. of step	Ignition switch is ON: 0 step Idling: 0 step Cranking: 0—60 steps	• Inspect following PIDs: ECT, IAT, MAF, RPM, VSS • EGR valve (See 01–16A–18 EGR VALVE INSPECTION [AJ].)	—
SEGRP DSD (Desired EGR valve position)	%	Ignition switch is ON: 0% Idling: 0% Cranking: 0—100%	• Inspect following PIDs: ECT, IAT, MAF, RPM, VSS	—
SHRTFT1 (Short term fuel trim (RH))	%	Idling: –20—20%	• Perform applicable DTC troubleshooting. (See 01–02C–13 DTC TABLE [AJ].)	—
SHRTFT11 (Short term fuel trim (RF))	%	Idling: –20—20%	• Perform applicable DTC troubleshooting (See 01–02C–13 DTC TABLE [AJ].)	—
SHRTFT12 (Short term fuel trim (LF))	%	Idling: –20—20%	• Perform applicable DTC troubleshooting (See 01–02C–13 DTC TABLE [AJ].)	—
SHRTFT2 (Short term fuel trim (LH))	%	Idling: –20—20%	• Perform applicable DTC troubleshooting (See 01–02C–13 DTC TABLE [AJ].)	—
SHRTFT21 (Short term fuel trim (RR))	%	Idling: –20—20%	• Perform applicable DTC troubleshooting (See 01–02C–13 DTC TABLE [AJ].)	—
SHRTFT22 (Short term fuel trim (LR))	%	Idling: –20—20%	• Perform applicable DTC troubleshooting (See 01–02C–13 DTC TABLE [AJ].)	—
SPARKADV (Ignition timing)	° (BTDC)	Ignition switch is ON: 0° (BTDC) Idling: Approx. 10° (BTDC)	• Inspect following PIDs: ALTTV, CPP, CPP/PNP, ECT, KNOCKR, MAF, PSP, RPM, TP REL, VSS • Perform engine tune-up (See 01–10C–39 ENGINE TUNE-UP [AJ].)	—
test (Test mode)	On/Off	—	—	—
TIRESIZE (Tire revolution per mile)	rev/mile	Indicate the tire revolution per a mile	—	—

Monitor item (Definition)	Unit/ Condition	Condition/Specification (Reference)	Inspection item (s)	PCM terminal
TP REL (Relative throttle position)	%	Throttle valve is closed → open: PID value changes smoothly	• TP sensor (See 01–40C–28 THROTTLE POSITION (TP) SENSOR INSPECTION [AJ].)	2AI, 2AM
TP1 (TP sensor No.1 signal voltage)	%	Ignition switch is ON and accelerator pedal not depressed: 13—24% Ignition switch is ON and WOT: Approx. 78%	• TP sensor (See 01–40C–28 THROTTLE POSITION (TP) SENSOR INSPECTION [AJ].)	2AM
	V	Ignition switch is ON and accelerator pedal not depressed: 3.8—4.35 V Ignition switch is ON and WOT: Approx. 1.1 V		
TP2 (TP sensor No.2 signal voltage)	%	Ignition switch is ON and accelerator pedal not depressed: 15—36% Ignition switch is ON and WOT: Approx. 88%	• TP sensor (See 01–40C–28 THROTTLE POSITION (TP) SENSOR INSPECTION [AJ].)	2AI
	V	Ignition switch is ON and accelerator pedal not depressed: 0.75—1.8 V Ignition switch is ON and WOT: Approx. 4.4 V		
TPCT (Relative throttle position)	V	Ignition switch is ON: 0 V	• TP sensor (See 01–40C–28 THROTTLE POSITION (TP) SENSOR INSPECTION [AJ].)	2AI, 2AM
VPWR (Battery positive voltage)	V	Ignition switch is ON: B+	• Battery (See 01–17B–2 BATTERY INSPECTION [L3 WITH TC].)	—
VSS (Vehicle speed)	KPH or MPH	Vehicle speed is 20 km/h {12 mph}: 20 KPH {12 MPH} Vehicle speed is 40 km/h {25 mph}: 40 KPH {25 MPH}	• Perform applicable DTC troubleshooting (See 01–02C–13 DTC TABLE [AJ].)	—
VT ACT1 (Actual valve timing (RH))	°	Idling: 0°	• Inspect following PIDs: ECT, RPM, TP REL • OCV (RH) (See 01–10C–42 OIL CONTROL VALVE (OCV) INSPECTION [AJ].)	2AE, 2AD
VT ACT2 (Actual valve timing (LH))	°	Idling: 0°	• Inspect following PIDs: ECT, RPM, TP REL • OCV (LH) (See 01–10C–42 OIL CONTROL VALVE (OCV) INSPECTION [AJ].)	2AB, 2AA
VT DIFF1 (Difference between actual and target valve timing (RH))	°	Idling: 0°	• Inspect following PIDs: ECT, RPM, TP REL • OCV (RH) (See 01–10C–42 OIL CONTROL VALVE (OCV) INSPECTION [AJ].)	2AE, 2AD
VT DIFF2 (Difference between actual and target valve timing (LH))	°	Idling: 0°	• Inspect following PIDs: ECT, RPM, TP REL • OCV (LH) (See 01–10C–42 OIL CONTROL VALVE (OCV) INSPECTION [AJ].)	2AB, 2AA

Monitor item (Definition)	Unit/ Condition	Condition/Specification (Reference)	Inspection item (s)	PCM terminal
DUTY1 (OCV control signal (RH))	%	Idling: 0%	• Inspect following PIDs: ECT, RPM, TP REL • OCV (RH) (See 01–10C–42 OIL CONTROL VALVE (OCV) INSPECTION [AJ].)	2AE, 2AD
VT DUTY2 (OCV control signal (LH))	%	Idling: 0%	• Inspect following PIDs: ECT, RPM, TP REL • OCV (LH) (See 01–10C–42 OIL CONTROL VALVE (OCV) INSPECTION [AJ].)	2AB, 2AA

*1 : MTX
*2 : California emission regulation applicable model

Freeze Frame Data Monitor Table

- Retrieve the following FFD.

Note

- FFD is a snapshot of the conditions that are present when DTC or PENDING CODE is stored. Once FFD is stored, this data will remain in PCM memory even if another emission related DTC or PENDING CODE is stored additionally, except for Misfire or Fuel System related DTC or PENDING CODE. Once Misfire or Fuel System related DTC or PENDING CODE is stored, it will overwrite any previous data and the FFD will not be further overwritten. When DTC associated with the FFD is erased or PCM is reset, new FFD can be stored.

Support item	Condition/Unit	
DTC that caused required FFD storage	—	
el system loop status	Refer to list below	
ngine load calculated value	%	
Engine coolant temperature	°C	°F
Short fuel trim	%	
Long fuel trim	%	
Engine speed	rpm	
Vehicle speed	km/h	mph
Spark advance	BTDC	
Intake air temperature	°C	°F
Mass air flow	g/s	
Throttle position (sensor No.1)	%	
Time since engine start	sec.	
Desired EGR valve opening angle	%	
Desired purge solenoid valve control duty	%	
Fuel level	%	
Number of warm-ups since DTCs cleared	—	
Distance travelled since DTCs cleared	km	miles
Barometric pressure	kPa	
Estimated catalyst converter temperature	°C	°F
PCM power supply voltage	V	
Absolute load value	%	
Relative throttle position	%	
Throttle position (sensor No.2)	%	
ccelerator pedal position (sensor No.1)	%	
celerator pedal position (sensor No.2)	%	
Desired throttle valve opening angle	%	
Desired Equivalence Ratio	—	
Ambient air temperature	deg. C	

Meaning of fuel system loop status

- The following information is displayed on the tester.
  - — Feedback stops: ECT is lower than the determined feedback zone.
  - — Feedback operating: HO2S being used for feedback is normal.
  - — Feedback stops: Open loop due to driving condition
  - — Feedback stops: Open loop due to detected system fault
  - — Feedback operating: Malfunction occurred in HO2S (rear) system

Terminal Voltage Table (Reference)

PCM
WIRING HARNESS-SIDE CONNECTOR

2BE	2BA	2AW	2AS	2AO	2AK	2AG	2AC	2Y	2U	2Q	2M	2I	2E	2A
2BF	2BB	2AX	2AT	2AP	2AL	2AH	2AD	2Z	2V	2R	2N	2J	2F	2B
2BG	2BC	2AY	2AU	2AQ	2AM	2AI	2AE	2AA	2W	2S	2O	2K	2G	2C
2BH	2BD	2AZ	2AV	2AR	2AN	2AJ	2AF	2AB	2X	2T	2P	2L	2H	2D

1BE	1BA	1AW	1AS	1AO	1AK	1AG	1AC	1Y	1U	1Q	1M	1I	1E	1A
1BF	1BB	1AX	1AT	1AP	1AL	1AH	1AD	1Z	1V	1R	1N	1J	1F	1B
1BG	1BC	1AY	1AU	1AQ	1AM	1AI	1AE	1AA	1W	1S	1O	1K	1G	1C
1BH	1BD	1AZ	1AV	1AR	1AN	1AJ	1AF	1AB	1X	1T	1P	1L	1H	1D

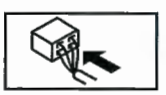

E6U140BW5L04

Terminal	Signal	Connected to	Measurement condition	Voltage (V)	Inspection item
1A	B+	Main relay	IG SW OFF after 5 min	Below 1.0	• Main relay • Related wiring harness
			IG SW ON	B+	
1B	B+	Main relay	IG SW OFF after 5 min	1.0 or less	• Main relay • Related wiring harness
			IG SW ON	B+	
1C	—	—	—	—	—
1D	Ground	Body ground	Under any condition	1.0 or less	• Related wiring harness
1E	Back-up power supply	Battery (positive terminal)	Under any condition	B+	• Battery • Related wiring harness
1F	—	—	—	—	—
1G	—	—	—	—	—
1H	—	—	—	—	—
1I	Immobilizer system	Coil antenna	Because this terminal is for communication, good/no good judgment by terminal voltage is not possible.		• Related wiring harness
1J	Immobilizer system	Coil antenna	Because this terminal is for communication, good/no good judgment by terminal voltage is not possible.		• Related wiring harness
1K	—	—	—	—	—
1L	—	—	—	—	—
1M	Security light control	Instrument cluster (Security light)	While the security light is illuminated	1.0 or less	• Instrument cluster • Related wiring harness
			Except above	B+	
1N*1,*3	Vehicle speed output	Instrument cluster (Speedometer)	Because this terminal is for communication, good/no good judgment by terminal voltage is not possible.		• Instrument cluster • Related wiring harness
1O	—	—	—	—	—
1P	MAF/IAT sensor ground	MAF/IAT sensor	IG SW ON	1.0 or less	• MAF/IAT sensor • Related wiring harness
			Idle	1.0 or less	
1Q	CAN (H)	Instrument cluster, ABS/TCS HU/CM, TCM,TPMS control module	Because this terminal is for CAN, good/no good judgment by terminal voltage is not possible.		• Related wiring harness

Terminal	Signal	Connected to	Measurement condition		Voltage (V)	Inspection item
1R	CAN (L)	Instrument cluster, ABS/TCS HU/CM, TCM,TPMS control module	Because this terminal is for CAN, good/no good judgment by terminal voltage is not possible.			• Related wiring harness
1S	—	—	—		—	—
1T	APP sensor ground (No. 2)	APP sensor No. 2	IG SW ON		1.0 or less	• APP sensor • Related wiring harness
1U	Fan control	Fan control module	Inspect using the wave profile. (See 01–40C–20 Inspection Using An Oscilloscope (Reference).)			• Fan control module • Related wiring harness
1V	Fuel pump control	Fuel pump relay	IG SW ON		B+	• Fuel pump relay • Related wiring harness
			Cranking		1.0 or less	
			Idle			
1W	—	—	—		—	—
1X	APP sensor ground (No. 1)	APP sensor No. 1	IG SW ON		1.0 or less	• APP sensor • Related wiring harness
1Y	EVAP system leak detection pump (pump)	EVAP system leak detection pump	IG SW ON		B+	• EVAP system leak detection pump • Related wiring harnesses
			Idle		B+	
1Z	Battery voltage input control	Main relay	IG SW OFF		1.0 or less	• Main relay • Related wiring harness
			IG SW ON		B+	
1AA	—	—	—		—	—
1AB*1	Clutch operation	CPP switch	Clutch pedal depressed		1.0 or less	• CPP switch • Related wiring harness
			Clutch pedal released		B+	
1AC	Drive-by-wire relay control	Drive-by-wire relay	IG SW ON		1.0 or less	• Drive-by-wire relay • Related wiring harness
1AD	Starter cut control*1	Starter relay	Cranking	Clutch pedal depressed	1.0 or less	• Starter relay • Related wiring harness
				Clutch pedal released	B+	
	Starter cut control*2	Starter relay	Cranking	P or N position	1.0 or less	
				Except above	B+	
1AE	—	—	—		—	—
1AF	Brake No.2	Brake switch	Brake pedal depressed		B+	• Brake switch • Related wiring harness
			Brake pedal released		1.0 or less	
1AG	Battery voltage input	Ignition switch	IG SW OFF		1.0 or less	• Ignition switch • Related wiring harness
			IG SW ON		B+	
1AH	Refrigerant pressure signal (medium)	Refrigerant pressure switch (medium)	Idle	Refrigerant pressure is 2.06 MPa or more	1.0 or less	• Refrigerant pressure switch (medium) • Related wiring harness
				Refrigerant pressure is 1.77 MPa or less	B+	
1AI	—	—	—		—	—
1AJ	Brake No.1	Brake switch	Brake pedal depressed		B+	• Brake switch • Related wiring harness
			Brake pedal released		1.0 or less	
1AK	Intake air amount	MAF sensor	Engine speed is 2,500 rpm.		Approx. 1.9	• MAF/IAT sensor • Related wiring harness
			Idle (after warm up) (no electrical load, A/C off, P/S off)		Approx. 1.3	

Terminal	Signal	Connected to	Measurement condition		Voltage (V)	Inspection item
1AL	Atmospheric pressure	EGR boost sensor	IG SW ON (at sea level)		Approx. 4.1	• EGR boost sensor • Related wiring harness
1AM	—	—	—		—	—
1AN	A/C signal	Refrigerant pressure switch (high, low), A/C switch	Idle	A/C switch off	B+	• A/C switch • Refrigerant pressure switch (high, low) • Related wiring harness
				A/C switch and pressure switch on	1.0 or less	
1AO	APP sensor (No. 1)	APP sensor No. 1	IG SW ON	APP closed	1.55—1.62	• APP sensor • Related wiring harness
				APP open	3.49—4.09	
1AP	APP sensor (No. 2)	APP sensor No. 2	IG SW ON	APP closed	1.01—1.07	• APP sensor • Related wiring harness
				APP open	2.94—3.54	
1AQ	—	—	—		—	—
1AR	APP sensor voltage (No. 1)	APP sensor No. 1	IG SW ON		Approx. 5.0	• APP sensor • Related wiring harness
1AS	Cruise control switch	Cruise control switch	IG SW ON	ON/OFF switch pressed in	Approx. 0	• Cruise control switch • Related wiring harness
				CANCEL switch pressed in	Approx. 1.2	
				SET/COAST switch pressed in	Approx. 3.2	
				RES/ACCEL switch pressed in	Approx. 4.2	
				Others	Approx. 5.0	
1AT	Intake air temperature	IAT sensor	IG SW ON	IAT 20°C{68°F}	2.4—2.6	• IAT sensor • Related wiring harness
				IAT 30°C{86°F}	1.7—1.9	
1AU	—	—	—		—	—
1AV	APP sensor voltage (No. 2)	APP sensor No. 2	IG SW ON		Approx. 5.0	• APP sensor • Related wiring harness
1AW	A/C control	A/C relay	A/C on		1.0 or less	• A/C relay • Related wiring harness
			A/C off		B+	
1AX	EGR boost sensor solenoid valve	EGR boost sensor solenoid valve	Idle (after warm up)		B+	• EGR boost sensor solenoid valve • Related wiring harness
1AY	—	—	—		—	—
1AZ	Constant voltage (Vref)	EGR boost sensor	IG ON		Approx. 5.0	• EGR boost sensor • Related wiring harness
1BA	EVAP system leak detection pump (solenoid)	EVAP system leak detection pump	Idle		B+	• EVAP system leak detection pump • Related wiring harness
1BB	VAD control	VAD control solenoid valve	Idle (after warm up)	Engine speed below 6,300 rpm	B+	• VAD control solenoid valve • Related wiring harness
				Engine speed above 6,300 rpm	1.0 or less	
1BC	—	—	—		—	—

Terminal	Signal	Connected to	Measurement condition		Voltage (V)	Inspection item
1BD	EGR boost sensor ground	EGR boost sensor	Under any condition		1.0 or less	• EGR boost sensor • Related wiring harness
1BE	Drive-by-wire relay power	Drive-by-wire relay	IG SW OFF		B+	• Drive-by-wire relay • Related wiring harness
			IG SW ON		1.0 or less	
1BF	Purge control	Purge solenoid valve	Inspect using the wave profile. (See 01–40C–20 Inspection Using An Oscilloscope (Reference).)			• Purge solenoid valve • Related wiring harness
1BG	—	—	—		—	—
1BH	IAT sensor ground	IAT sensor	Under any condition		1.0 or less	• MAF/IAT sensor • Related wiring harness
2A	Throttle actuator control (+)	Throttle actuator	IG SW ON	APP CLOSED	1.0 or less	• Throttle actuator • Related wiring harness
				APP OPEN	Approx. 1.4	
2B	Throttle actuator control (–)	Throttle actuator	IG SW ON	APP CLOSED	Approx. 3.1	• Throttle actuator • Related wiring harness
				APP OPEN	1.0 or less	
2C	Ground	Body ground	Under any condition		1.0 or less	• Related wiring harness
2D	Ground	Body ground	Under any condition		1.0 or less	• Related wiring harness
2E	Fuel injection (#4)	Fuel injector No.4	Inspect using the wave profile. (See 01–40C–20 Inspection Using An Oscilloscope (Reference).)			• Fuel injector No.4 • Related wiring harness
2F	Fuel injection (#5)	Fuel injector No.5	Inspect using the wave profile. (See 01–40C–20 Inspection Using An Oscilloscope (Reference).)			• Fuel injector No.5 • Related wiring harness
2G	Fuel injection (#6)	Fuel injector No.6	Inspect using the wave profile. (See 01–40C–20 Inspection Using An Oscilloscope (Reference).)			• Fuel injector No.6 • Related wiring harness
2H	Ground	Body ground	Under any condition		1.0 or less	• Related wiring harness
2I	Fuel injection (#1)	Fuel injector No.1	Inspect using the wave profile. (See 01–40C–20 Inspection Using An Oscilloscope (Reference).)			• Fuel injector No.1 • Related wiring harness
2J	Fuel injection (#2)	Fuel injector No.2	Inspect using the wave profile. (See 01–40C–20 Inspection Using An Oscilloscope (Reference).)			• Fuel injector No.2 • Related wiring harness
2K	Fuel injection (#3)	Fuel injector No.3	Inspect using the wave profile. (See 01–40C–20 Inspection Using An Oscilloscope (Reference).)			• Fuel injector No.3 • Related wiring harness
2L	Ground	Body ground	Under any condition		1.0 or less	• Related wiring harness
2M	OCV control	OCV No.1	IG SW ON		B+	• OCV • Related wiring harness
2N	OCV control	OCV No.2	IG SW ON		B+	• OCV • Related wiring harness
2O	EGR valve #4 coil control	EGR valve	IG SW ON		1.0 or less	• EGR valve • Related wiring harness
			Idle		1.0 or less	
2P	—	—	—		—	—
2Q	EGR valve #1 coil control	EGR valve	IG SW ON		1.0 or less	• EGR valve • Related wiring harness
			Idle		1.0 or less	
2R	EGR valve #2 coil control	EGR valve	IG SW ON		B+	• EGR valve • Related wiring harness
			Idle		B+	

Terminal	Signal	Connected to	Measurement condition		Voltage (V)	Inspection item
2S	EGR valve #3 coil control	EGR valve	IG SW ON		B+	• EGR valve • Related wiring harness
			Idle		B+	
2T	PSP	PSP switch	Idle	Steering wheel neutral	B+	• PSP switch • Related wiring harness
				While steering wheel is turned	1.0 or less	
2U	—	—	—		—	—
2V*1,*3	VSS (+)	VSS	Verify that the voltage changes when the engine is started and the front wheel is being driven.			• VSS • Related wiring harness
2W*1,*3	VSS (–)	VSS	Verify that the voltage changes when the engine is started and the front wheel is being driven.			• VSS • Related wiring harness
2X*1	Neutral position	Neutral switch	IG SW ON	Shift lever is at neutral position	1.0 or less	• Neutral switch • Related wiring harness
				Shift lever is not at neutral position	B+	
2Y	CKP (+)	CKP sensor	Inspect using the wave profile. (See 01–40C–20 Inspection Using An Oscilloscope (Reference).)			• CKP sensor • Related wiring harness
2Z	CKP (–)	CKP sensor	Inspect using the wave profile. (See 01–40C–20 Inspection Using An Oscilloscope (Reference).)			• CKP sensor • Related wiring harness
2AA	CMP (+)	CMP sensor (left bank)	Inspect using the wave profile. (See 01–40C–20 Inspection Using An Oscilloscope (Reference).)			• CMP sensor • Related wiring harness
2AB	CMP (–)	CMP sensor (left bank)	Inspect using the wave profile. (See 01–40C–20 Inspection Using An Oscilloscope (Reference).)			• CMP sensor • Related wiring harness
2AC	Knock (+)	KS	IG SW ON (Use digital voltmeter. Low voltage may be detected with analog type voltmeter.)		1.0 or less	• KS • Related wiring harness
2AD	CMP (+)	CMP sensor (right bank)	Inspect using the wave profile. (See 01–40C–20 Inspection Using An Oscilloscope (Reference).)			• CMP sensor • Related wiring harness
2AE	CMP (–)	CMP sensor (right bank)	Inspect using the wave profile. (See 01–40C–20 Inspection Using An Oscilloscope (Reference).)			• CMP sensor • Related wiring harness
2AF	Knock (–)	KS	IG SW ON (Use digital voltmeter. Low voltage may be detected with analog type voltmeter.)		1.0 or less	• KS • Related wiring harness
2AG	Rear HO2S (Right bank)	HO2S (RR)	Idle (after warm up)		0—1.0	• HO2S (RR) • Related wiring harness
			Acceleration		0.5—1.0	
			Deceleration		0—0.5	
2AH	Rear HO2S (left bank)	HO2S (LR)	Idle (after warm up)		Approx. 0.6	• HO2S (LR) • Related wiring harness
2AI	TP (No. 2)	TP sensor No. 2	IG SW ON	APP closed	0.75—1.8	• TP sensor • Related wiring harness
				APP open	Approx. 4.4	
2AJ	ECT sensor ground	ECT senor	Under any condition		1.0 or less	• ECT sensor • Related wiring harness
2AK	Front HO2S (Right bank)	HO2S (RF)	Idle (after warm up)		0—1.0	• HO2S (RF) • Related wiring harness
			Acceleration		0.5—1.0	
			Deceleration		0—0.5	
2AL	Front HO2S (left bank)	HO2S (LF)	Idle (after warm up)		Approx. 0.6	• HO2S (LF) • Related wiring harness

Terminal	Signal	Connected to	Measurement condition		Voltage (V)	Inspection item
2AM	TP (No. 1)	TP sensor No. 1	IG SW ON	APP closed	3.8—4.35	• TP sensor • Related wiring harness
				APP open	Approx. 1.1	
2AN	TP sensor ground	TP sensor	Under any condition		1.0 or less	• TP sensor • Related wiring harness
2AO	Rear HO2S heater control (left bank)	HO2S (LR) heater	Inspect using the wave profile. (See 01–40C–20 Inspection Using An Oscilloscope (Reference).)			• HO2S (LR) • Related wiring harness
2AP	Field coil control	Generator	Inspect using the wave profile. (See 01–40C–20 Inspection Using An Oscilloscope (Reference).)			• Generator • Related wiring harness
2AQ	ECT	ECT sensor	IG SW ON	ECT is 20°C{68°F}	2.9—3.1	• ECT sensor • Related wiring harness
				After warm-up	0.2—1.0	
2AR	Constant voltage (Vref)	TP sensor	IG SW ON		Approx. 5.0	• TP sensor • Related wiring harness
2AS	Front HO2S heater control (left bank)	HO2S (LF) heater	Inspect using the wave profile. (See 01–40C–20 Inspection Using An Oscilloscope (Reference).)			• HO2S (LF) • Related wiring harness
2AT	Rear HO2S heater control (right bank)	HO2S (RR) heater	Inspect using the wave profile. (See 01–40C–20 Inspection Using An Oscilloscope (Reference).)			• HO2S (RR) • Related wiring harness
2AU	Generator output voltage	Generator	Inspect using the wave profile. (See 01–40C–20 Inspection Using An Oscilloscope (Reference).)			• Generator • Related wiring harness
2AV	HO2S (RF) ground	HO2S (RF)	Under any condition		1.0 or less	• HO2S (RF) • Related wiring harness
2AW	Front HO2S heater control (right bank)	HO2S (RF) heater	Inspect using the wave profile. (See 01–40C–20 Inspection Using An Oscilloscope (Reference).)			• HO2S (RF) • Related wiring harness
2AX	HO2S (LF) ground	HO2S (LF)	Under any condition		1.0 or less	• HO2S (LF) • Related wiring harness
2AY	HO2S (RR) ground	HO2S (RR)	Under any condition		1.0 or less	• HO2S (RR) • Related wiring harness
2AZ	Ground	Body ground	Under any condition		1.0 or less	• Related wiring harness
2BA	HO2S (LR) ground	HO2S (LR)	Under any condition		1.0 or less	• HO2S (LR) • Related wiring harness
2BB	IGT4	Ignition coil (No.4 cylinder)	Inspect using the wave profile. (See 01–40C–20 Inspection Using An Oscilloscope (Reference).)			• Ignition coil • Related wiring harness
2BC	IGT5	Ignition coil (No.5 cylinder)	Inspect using the wave profile. (See 01–40C–20 Inspection Using An Oscilloscope (Reference).)			• Ignition coil • Related wiring harness
2BD	IGT6	Ignition coil (No.6 cylinder)	Inspect using the wave profile. (See 01–40C–20 Inspection Using An Oscilloscope (Reference).)			• Ignition coil • Related wiring harness
2BE	IGT1	Ignition coil (No.1 cylinders)	Inspect using the wave profile. (See 01–40C–20 Inspection Using An Oscilloscope (Reference).)			• Ignition coil • Related wiring harness
2BF	IGT2	Ignition coil (No.2 cylinder)	Inspect using the wave profile. (See 01–40C–20 Inspection Using An Oscilloscope (Reference).)			• Ignition coil • Related wiring harness
2BG	IGT3	Ignition coil (No.3 cylinder)	Inspect using the wave profile. (See 01–40C–20 Inspection Using An Oscilloscope (Reference).)			• Ignition coil • Related wiring harness

Terminal	Signal	Connected to	Measurement condition	Voltage (V)	Inspection item
2BH	Ground	Body ground	Under any condition	1.0 or less	• Related wiring harness

*1 : MTX
*2 : ATX
*3 : Without ABS HU/CM

Inspection Using An Oscilloscope (Reference)
Ignition coil control signals
PCM terminals
- No.1 cylinders: 2BE (+) — body ground (–)
- No.2 cylinders: 2BF (+) — body ground (–)
- No.3 cylinders: 2BG (+) — body ground (–)
- No.4 cylinders: 2BB (+) — body ground (–)
- No.5 cylinders: 2BC (+) — body ground (–)
- No.6 cylinders: 2BD (+) — body ground (–)

Oscilloscope setting
- 5 V/DIV (Y), 20 ms/DIV (X), DC range

Vehicle condition
- Idle after warm up (no load)

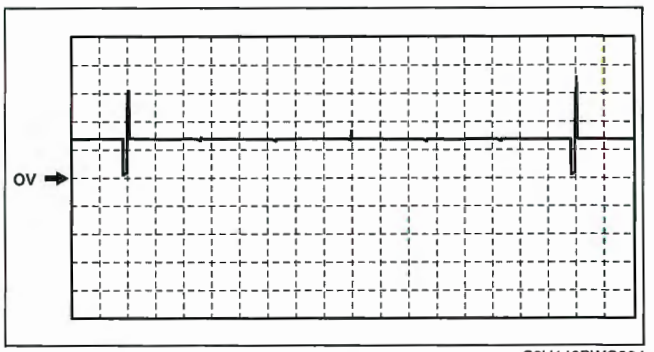

C6U140BWC004

Purge solenoid valve control signal
PCM terminals
- 1BF (+) — body ground (–)

Oscilloscope setting
- 2.5 V/DIV (Y), 20 ms/DIV (X), DC range

Vehicle condition
- Idle after warm up (no load, during purge control)

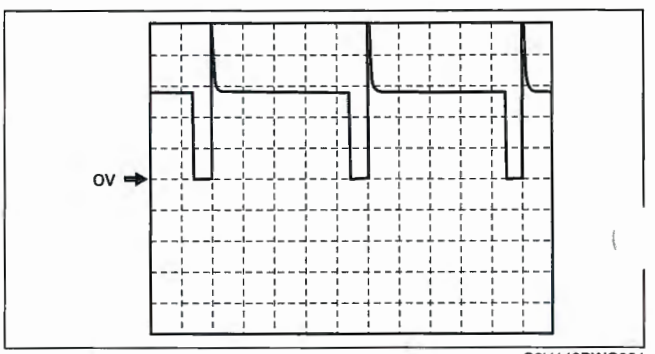

C6U140BWC001

CKP sensor signal
(+)
PCM terminals
- 2Y (+)—body ground (–)

Oscilloscope setting
- 2 V/DIV (Y), 10 ms/DIV (X), DC range

Vehicle condition
- Idle after warm up (no load)

(–)

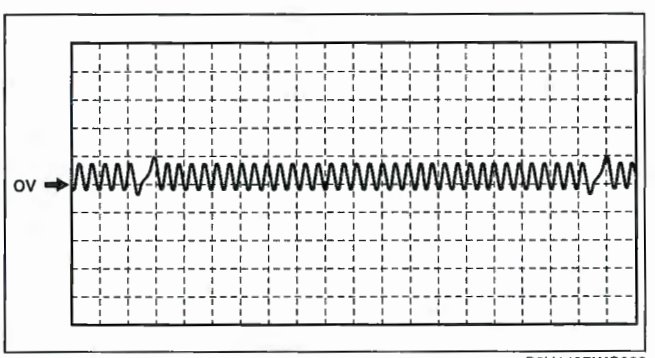

C6U140BWC002

PCM terminals
- 2Z (+)—body ground (–)

Oscilloscope setting
- 5 V/DIV (Y), 5 ms/DIV (X), DC range

Vehicle condition
- Idle after warm up (no load)

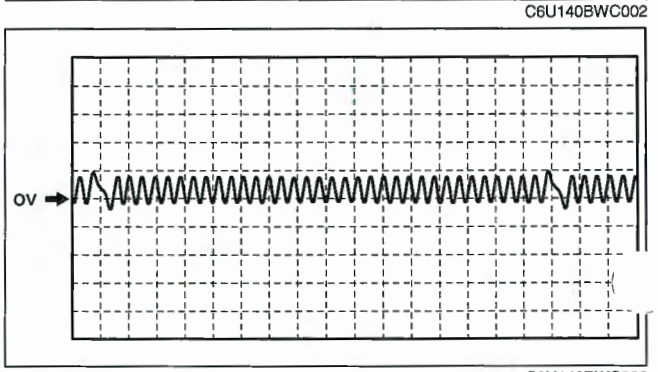

C6U140BWC003

Generator output voltage signal
PCM terminals
- 2AU (+)—body ground (–)

Oscilloscope setting
5V/DIV (Y), 5ms/DIV (X), DC range
Vehicle condition
- Idle after warm up (no load)

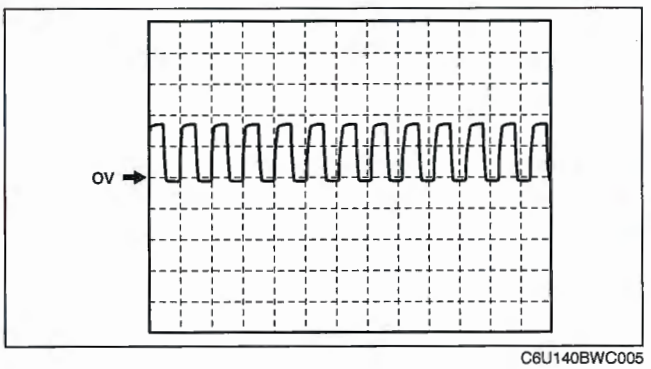

C6U140BWC005

Fan control signal
PCM terminals
- 1U (+)—body ground (–)

Oscilloscope setting
- 2 V/DIV (Y), 0.2ms/DIV (X), DC range

Vehicle condition
- Idle after warm up (no load)

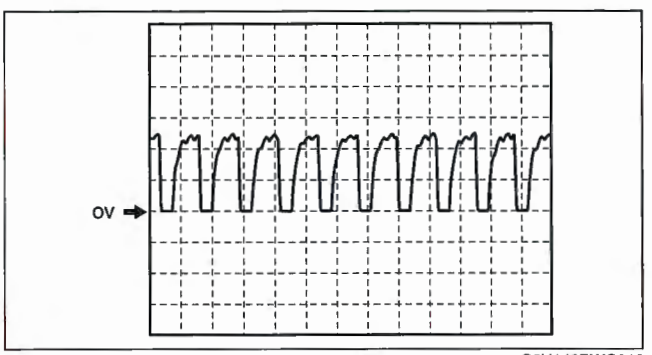

C6U140BWC013

Field coil control signal
PCM terminals
2AP (+)—body ground (–)
Oscilloscope setting
- 0.5V/DIV (Y), 5ms/DIV (X), DC range

Vehicle condition
- Idle after warm up (no load)

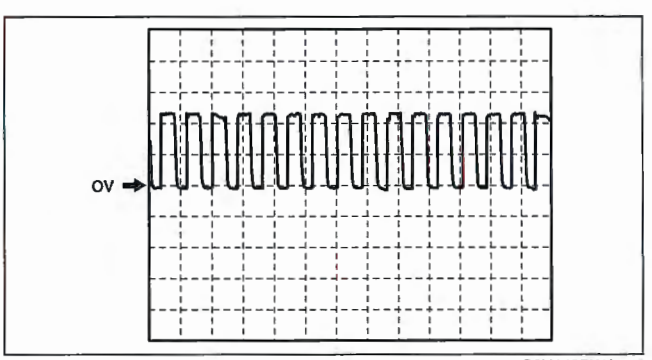

C6U140BWC006

CMP sensor signal
(+)
PCM terminals
- CMP sensor (left bank): 2AA (+)—body ground (–)
- CMP sensor (right bank): 2AD (+)—body ground (–)

Oscilloscope setting
- 1 V/DIV (Y), 20 ms/DIV (X), DC range

Vehicle condition
- Idle after warm up (no load)

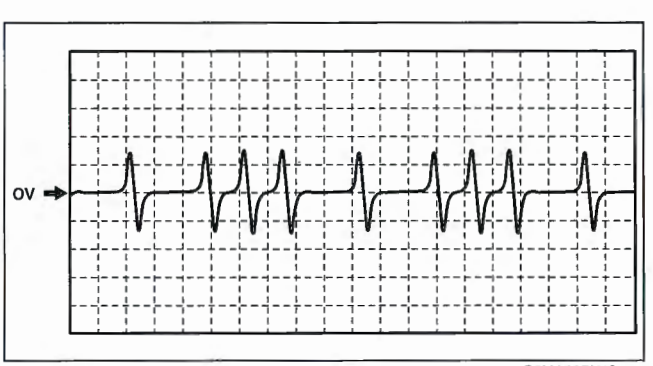

C6U140BWC009

(–)

PCM terminals
- CMP sensor (left bank): 2AB (+)—body ground (–)
- CMP sensor (right bank): 2AE (+)—body ground (–)

Oscilloscope setting
- 1 V/DIV (Y), 20 ms/DIV (X), DC range

Vehicle condition
- Idle after warm up (no load)

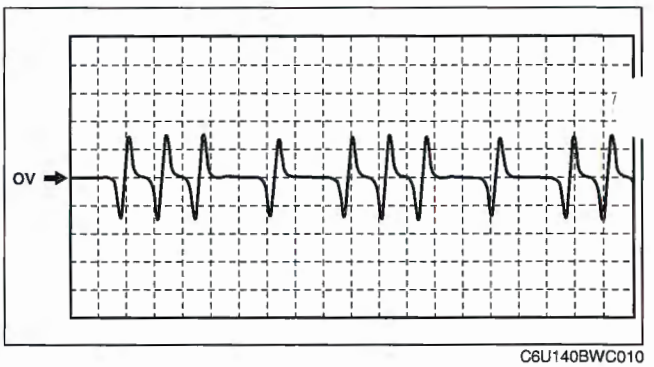

C6U140BWC010

Fuel injection signals

PCM terminals
- No.1: 2I (+) — body ground (–)
- No.2: 2J (+) — body ground (–)
- No.3: 2K (+) — body ground (–)
- No.4: 2E (+) — body ground (–)
- No.5: 2F (+) — body ground (–)
- No.6: 2G (+) — body ground (–)

Oscilloscope setting
- 2.5 V/DIV (Y), 10 ms/DIV (X), DC range

Vehicle condition
- Idle after warm up (no load)

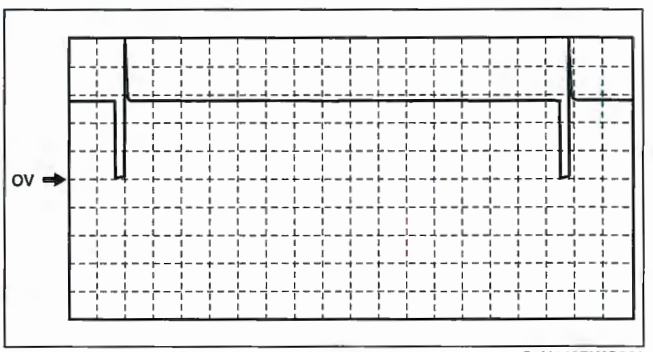

C6U140BWC008

HO2S signals

PCM terminals
- Front HO2S (right bank): 2AK (+)—body ground (–)
- Front HO2S (left bank): 2AL (+)—body ground (–)
- Rear HO2S (right bank): 2AG (+)—body ground (–)
- Rear HO2S (left bank): 2AH (+)—body ground (–)

Oscilloscope setting
- 0.5V/DIV (Y), 500ms/DIV (X), DC range

Vehicle condition
- Idle after warm up (no load)

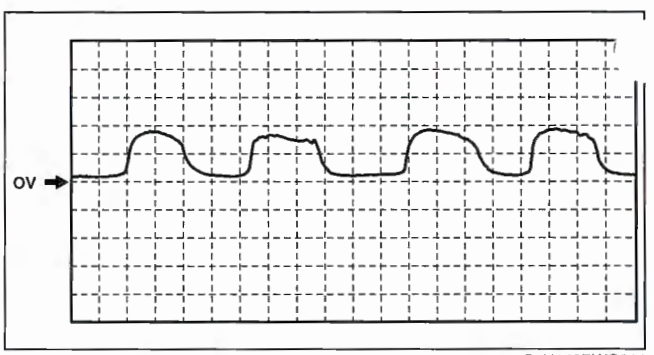

C6U140BWC011

HO2S heater control signal

PCM terminals
- Front HO2S heater (right bank): 2AW (+)—body ground (–)
- Front HO2S heater (left bank): 2AS (+)—body ground (–)
- Rear HO2S heater (right bank): 2AT (+)—body ground (–)
- Rear HO2S heater (left bank): 2AO (+)—body ground (–)

Oscilloscope setting
- 5V/DIV (Y), 500ms/DIV (X), DC range

Vehicle condition
- Idle after warm up (no load)

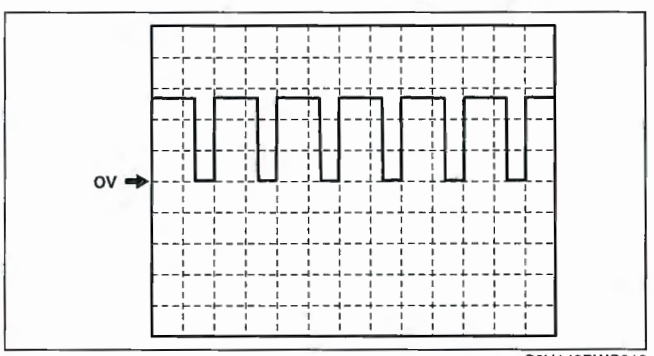

C6U140BWC012

PCM REPLACEMENT [AJ]

1. Connect the WDS or equivalent to the DLC-2.
2. Set up the WDS or equivalent (including the vehicle recognition).
3. Select "Module Programming".
4. Select "Programmable Module Installation".
5. Select "PCM" and perform procedures according to directions on the WDS or equivalent screen.

Note
- If the PCM is replaced with a new one, the PCM stores DTC P0602 and illuminates the MIL even though no malfunction is detected. When the configuration is completed, DTC P0602 is cleared.

E6U014018880W10

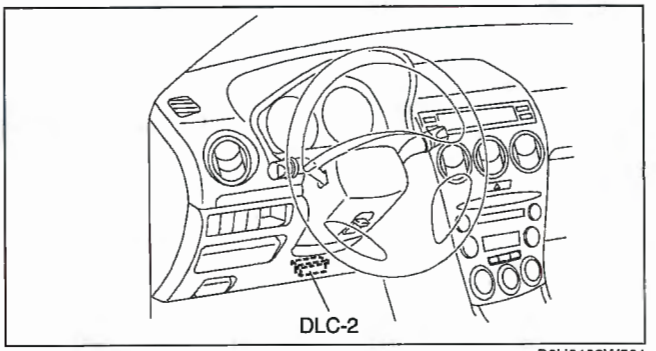

B6U0102W501

6. Retrieve DTC's by the WDS or equivalent, then verify that there in no DTC present.
   - If DTC is present, perform applicable DTC inspection. (See 01–02C–13 DTC TABLE [AJ].)

CLUTCH PEDAL POSITION (CPP) SWITCH INSPECTION [AJ]

E6U014018660W01

Note
- Perform the following inspection only when directed.

Continuity Inspection

1. Disconnect the negative battery cable.
2. Remove the clutch switch. (See 05–10–7 CLUTCH PEDAL REMOVAL/INSTALLATION [G35M-R, A65M-R].)
3. Inspect for continuity between the clutch switch terminals B and D using an ohmmeter.
   - If the clutch switch is okay, but the PID value is out of specification, perform the "Circuit Open/Short Inspection".
   - If not as specified, replace the clutch switch. (See 05–10–7 CLUTCH PEDAL REMOVAL/INSTALLATION [G35M-R, A65M-R].)

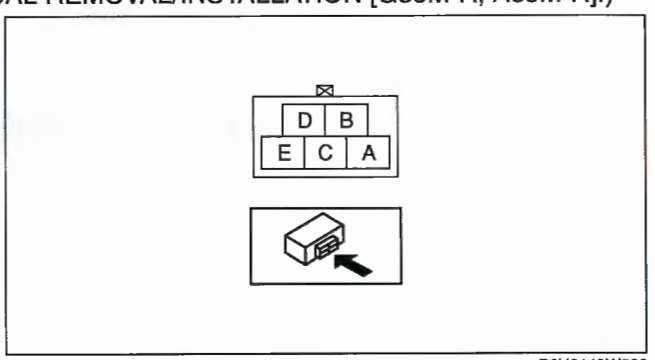

B6U0140W502

Specification

O—O : Continuity

Condition	Terminal	
	B	D
Rod pushed		
Except above	O	O

B6U0140W523

Circuit Open/Short Inspection

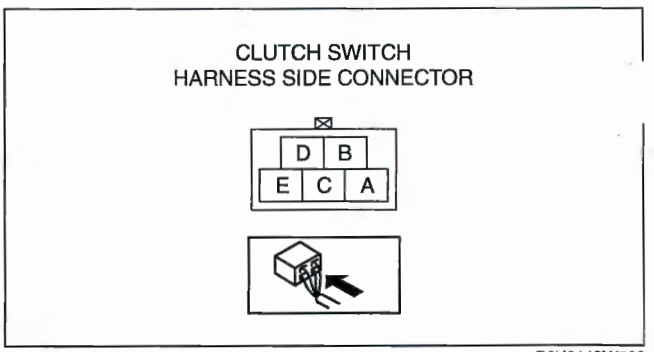

B6U0140W503

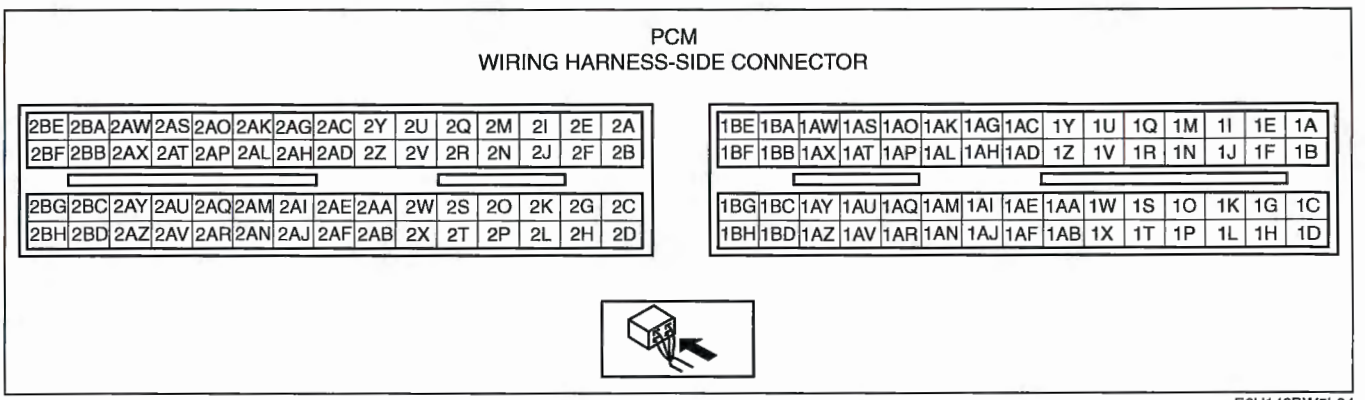

E6U140BW5L04

1. Disconnect the PCM connector. (See 01–40C–5 PCM REMOVAL/INSTALLATION [AJ].)
2. Inspect the following harness for open or short circuit. (Continuity check)

Open circuit
- Clutch switch terminal B and PCM terminal 1AB
- Clutch switch terminal D and body ground

Short circuit
- Clutch switch terminal B and power supply
- Clutch switch terminal B and body ground

NEUTRAL SWITCH INSPECTION [AJ]

E6U014017640W01

Note
- Perform the following inspection only when directed.

Continuity Inspection
1. Disconnect the negative battery cable.
2. Remove the neutral switch. (See 05–15B–4 NEUTRAL SWITCH REMOVAL/INSTALLATION [A65M-R].)
3. Inspect for continuity between the neutral switch terminals A and B using an ohmmeter.
   - If the neutral switch is okay, but the PID value is out of specification, perform the "Circuit Open/Short Inspection".
   - If not as specified, replace the neutral switch. (See 05–15B–4 NEUTRAL SWITCH REMOVAL/INSTALLATION [A65M-R].)

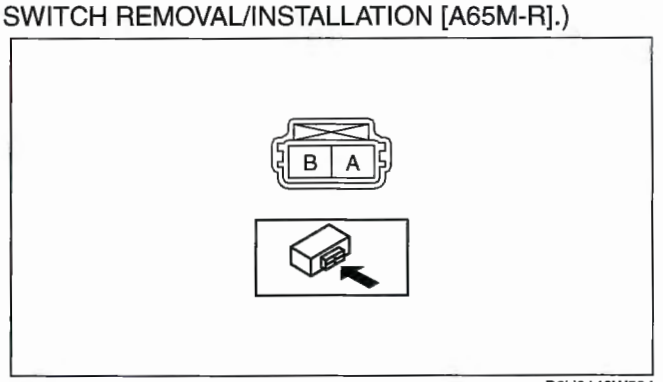

B6U0140W504

Specification

O—O : Continuity

Condition	Transmission	Terminal	
		A	B
Rod pushed	In neutral	O	O
Except above	Other		

B6U0140W524

Circuit Open/Short Inspection

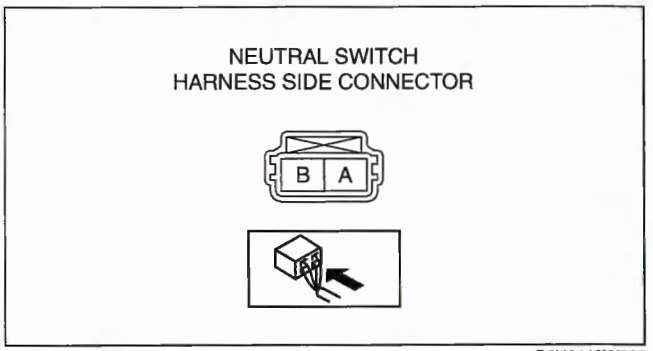

B6U0140W505

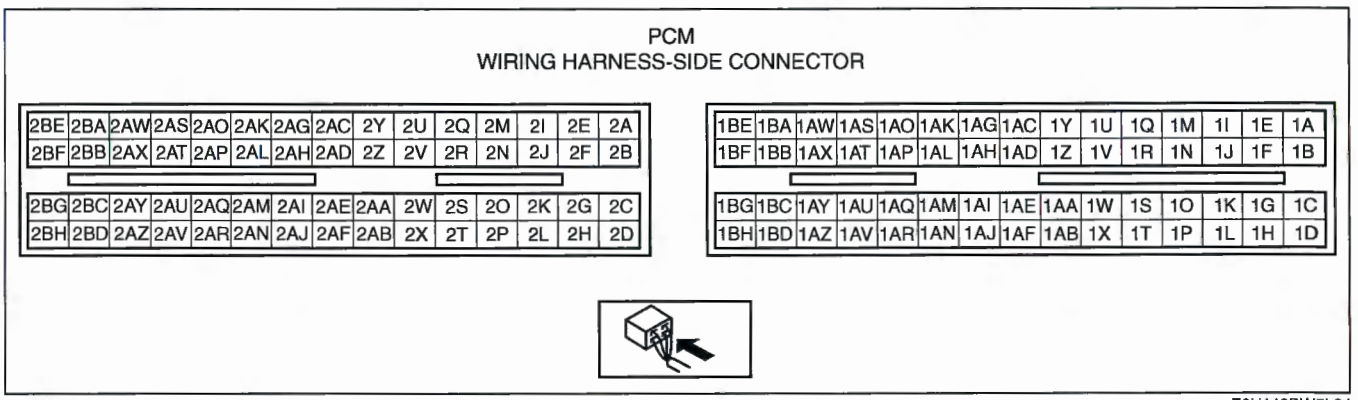

E6U140BW5L04

1. Disconnect the PCM connector. (See 01–40C–5 PCM REMOVAL/INSTALLATION [AJ].)
2. Inspect the following harness for open or short circuit. (Continuity check)

Open circuit

Neutral switch terminal A and PCM terminal 2X
Neutral switch terminal B and body ground

Short circuit

- Neutral switch terminal A and power supply
- Neutral switch terminal A and body ground

POWER STEERING PRESSURE (PSP) SWITCH INSPECTION [AJ]

E6U014032230W01

Note

- Perform the following inspection only when directed.

Continuity Inspection

1. Inspect the following if the power steering is inoperative:
   - Power steering fluid level
   - Power steering fluid leakage
   - Power steering fluid pressure
2. Disconnect the PSP switch connector.
3. Start the engine.
4. Inspect for continuity between PSP switch terminal A and body ground using an ohmmeter.
   - If the PSP switch is okay, but the PID value is out of specification, perform the "Circuit Open/Short Inspection".
   - If not as specified, replace the PSP switch. (See 06–12–28 POWER STEERING OIL PUMP REMOVAL/INSTALLATION [AJ].)

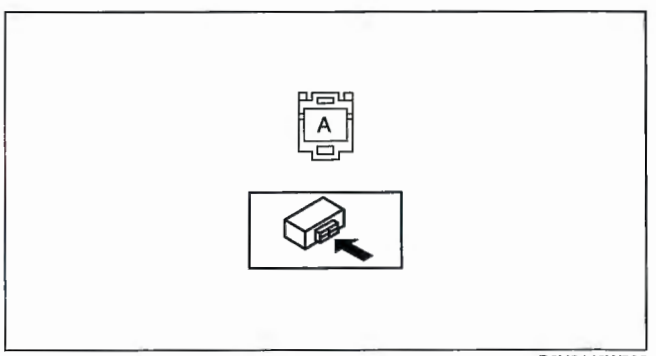

B6U0140W506

Specification

O—O : Continuity

Condition	Terminal A	Body GND
Steering wheel in straight ahead position		
While turning steering wheel	O——O	

C6U0140W525

Circuit Open/Short Inspection

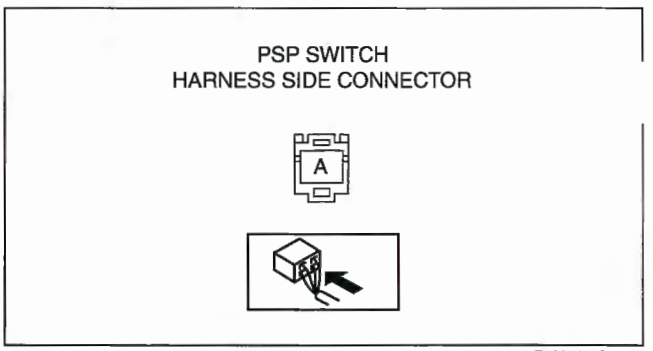

B6U0140W507

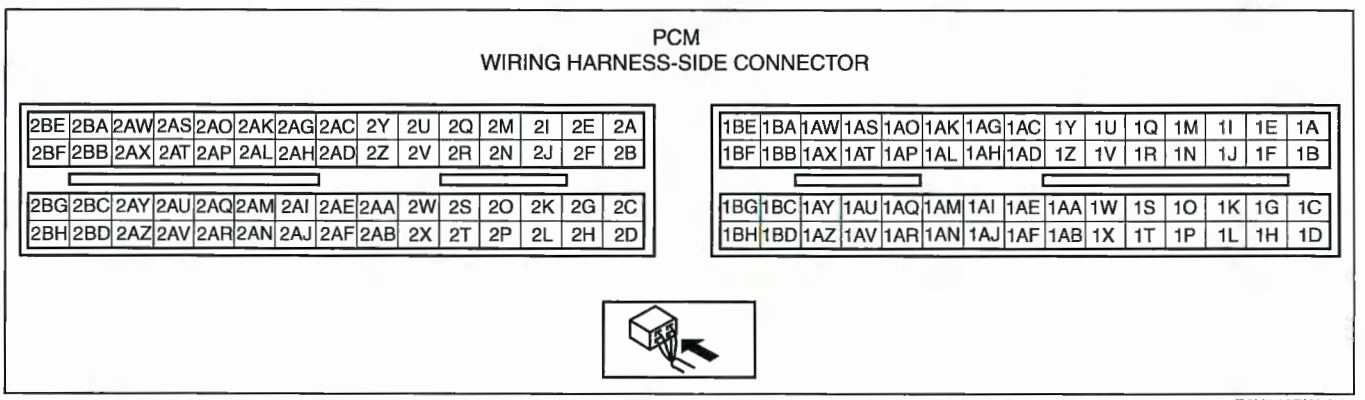

E6U140BW5L04

1. Disconnect the PCM connector. (See 01–40C–5 PCM REMOVAL/INSTALLATION [AJ].)
2. Inspect the following harnesses for open or short circuit. (Continuity check)

Open circuit
- PSP switch terminal A and PCM terminal 2T

Short circuit
- PSP switch terminal A and power supply
- PSP switch terminal A and body ground

ACCELERATOR PEDAL POSITION (APP) SENSOR INSPECTION [AJ]

E6U014041609W01

Note
- Perform the following inspection only when directed.

1. Connect the WDS or equivalent to the DLC-2.
2. Turn the ignition switch to ON position.
3. Select APP1 or APP2 PID (percentage) on the WDS or equivalent.
4. Verify that the APP1 or APP2 PID (percentage) changes smoothly while accelerator pedal is gradually depressed.
   - If as verified, go to next step.
   - If not as verified, perform the "Circuit Open/ Short Inspection".

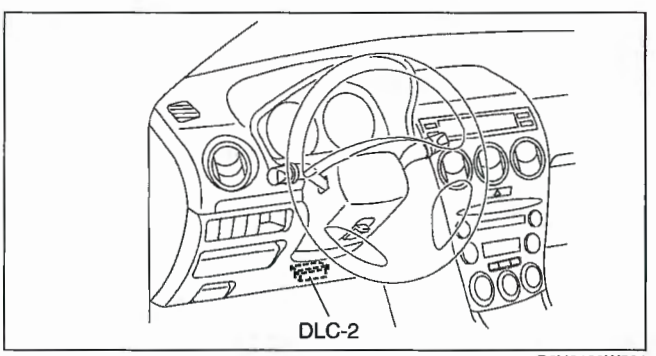

B6U0102W501

5. Verify that the APP1 or APP2 PID (percentage) is as indicated in the table below according to the condition of the accelerator pedal.
   - If not verified, perform the "Circuit Open/Short Inspection".
     — If there is no open or short circuit, replace the APP sensor. (See 01–13C–7 ACCELERATOR PEDAL REMOVAL/INSTALLATION [AJ].)

Specification

Condition	APP1 PID (%)	APP1 PID (V)	APP2 PID (%)	APP2 PID (V)
Accelerator pedal is released	31.0—32.4	1.55—1.62	20.2—21.4	1.01—1.07
Accelerator pedal is depressed	69.8—81.8	3.49—4.09	58.8—70.8	2.94—3.54

Circuit Open/Short Inspection

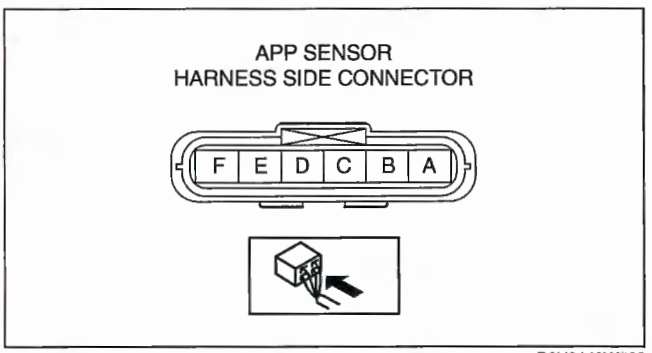

B6U0140W508

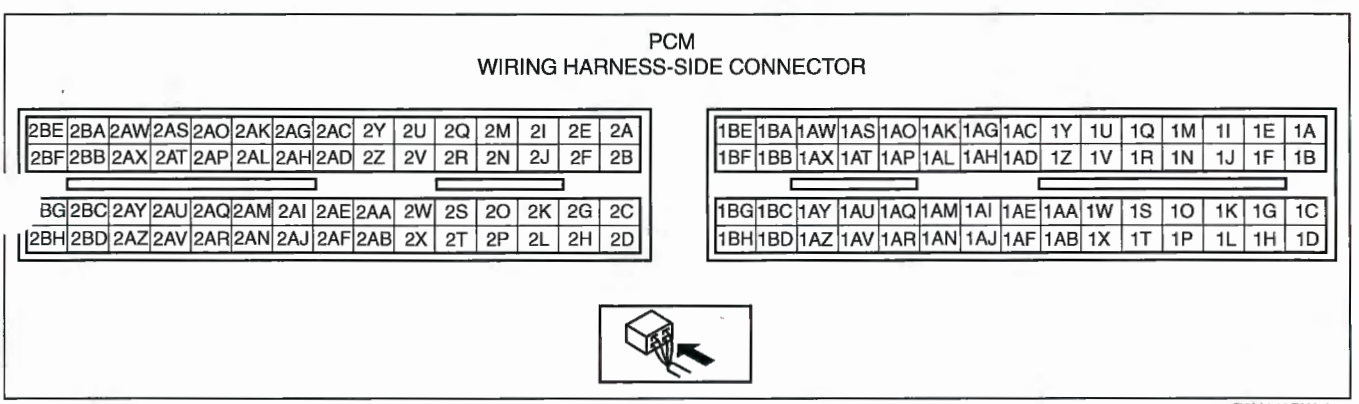

E6U140BW5L04

1. Disconnect the PCM connector. (See 01–40C–5 PCM REMOVAL/INSTALLATION [AJ].)
2. Inspect the following harness for open or short circuit. (Continuity check)

Open circuit
- APP sensor terminal A and PCM terminal 1AV
- APP sensor terminal B and PCM terminal 1T
- APP sensor terminal C and PCM terminal 1AP
- APP sensor terminal D and PCM terminal 1AR
- APP sensor terminal E and PCM terminal 1X
- APP sensor terminal F and PCM terminal 1AO

Short circuit
- APP sensor terminal A and power supply
- APP sensor terminal A and body ground
- APP sensor terminal B and power supply
- APP sensor terminal C and power supply
- APP sensor terminal C and body ground
- APP sensor terminal D and power supply
- APP sensor terminal D and body ground
- APP sensor terminal E and power supply
- APP sensor terminal F and power supply
- APP sensor terminal F and body ground

THROTTLE POSITION (TP) SENSOR INSPECTION [AJ]

E6U014018910W01

Note
- Perform the following inspection only when directed.

1. Verify that no DTC related to APP sensor has been detected.
   - If any DTCs related to APP sensor have been detected, perform the DTC inspection. (See 01–02C–13 DTC TABLE [AJ].)
2. Connect the WDS or equivalent to the DLC-2.
3. Turn the ignition switch to ON position.
4. Select TP1 or TP2 PID (percentage) on the WDS or equivalent.
5. Verify that the TP1 or TP2 PID is within the specification when the accelerator pedal not depressed. (See 01–40C–6 PCM INSPECTION [AJ].)
6. Operate the accelerator pedal and verify that the TP1 or TP2 PID (percentage) changes as shown in the following graph.
   - If not verified, perform the "Circuit Open/Short Inspection".
     — If there is no open or short circuit, replace the throttle body. (See 01–13C–2 INTAKE AIR SYSTEM REMOVAL/INSTALLATION [AJ].)

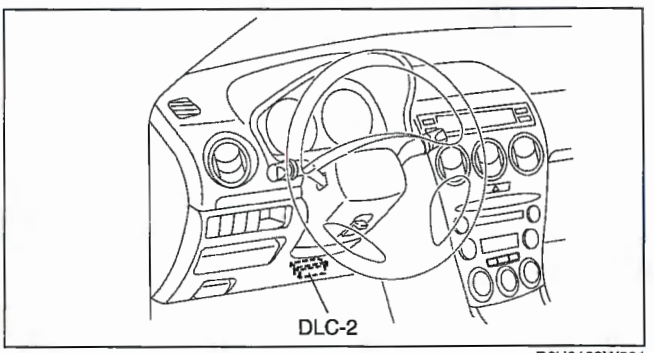

B6U0102W501

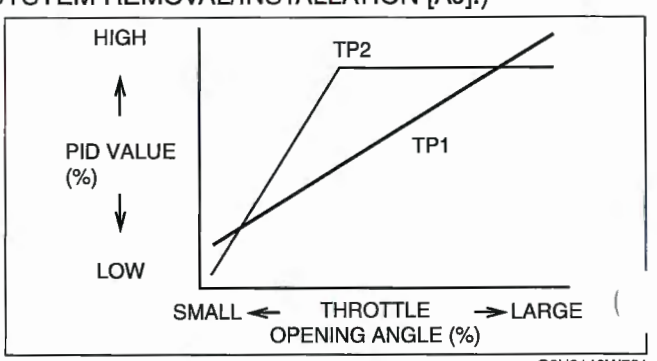

C6U0140W701

Circuit Open/Short Inspection

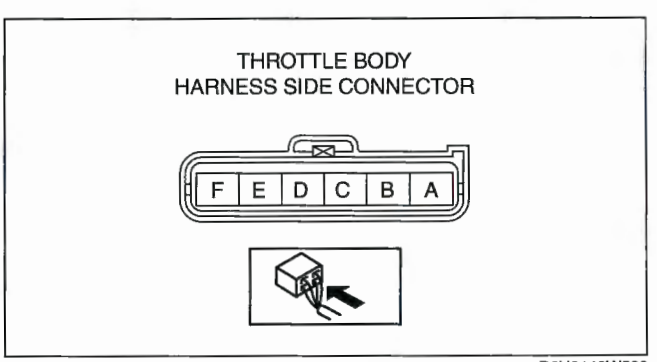

B6U0140W509

PCM
WIRING HARNESS-SIDE CONNECTOR

2BE	2BA	2AW	2AS	2AO	2AK	2AG	2AC	2Y	2U	2Q	2M	2I	2E	2A
2BF	2BB	2AX	2AT	2AP	2AL	2AH	2AD	2Z	2V	2R	2N	2J	2F	2B
2BG	2BC	2AY	2AU	2AQ	2AM	2AI	2AE	2AA	2W	2S	2O	2K	2G	2C
2BH	2BD	2AZ	2AV	2AR	2AN	2AJ	2AF	2AB	2X	2T	2P	2L	2H	2D

1BE	1BA	1AW	1AS	1AO	1AK	1AG	1AC	1Y	1U	1Q	1M	1I	1E	1A
1BF	1BB	1AX	1AT	1AP	1AL	1AH	1AD	1Z	1V	1R	1N	1J	1F	1B
1BG	1BC	1AY	1AU	1AQ	1AM	1AI	1AE	1AA	1W	1S	1O	1K	1G	1C
1BH	1BD	1AZ	1AV	1AR	1AN	1AJ	1AF	1AB	1X	1T	1P	1L	1H	1D

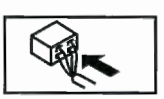

E6U140BW5L04

1. Disconnect the PCM connector. (See 01–40C–5 PCM REMOVAL/INSTALLATION [AJ].)
2. Inspect the following harnesses for open or short circuit. (Continuity check)

Open circuit

Throttle body terminal C and PCM terminal 2AI
- Throttle body terminal D and PCM terminal 2AR
- Throttle body terminal E and PCM terminal 2AN
- Throttle body terminal F and PCM terminal 2AM

Short circuit
- Throttle body terminal C and power supply
- Throttle body terminal C and body ground
- Throttle body terminal D and power supply
- Throttle body terminal D and body ground
- Throttle body terminal E and power supply
- Throttle body terminal F and power supply
- Throttle body terminal F and body ground

ENGINE COOLANT TEMPERATURE (ECT) SENSOR REMOVAL/INSTALLATION [AJ]

E6U014018840W01

Warning
- **A hot engine can cause severe burns. Turn off the engine and wait until it is cool before removing the ECT sensor.**

1. Disconnect the negative battery cable.
2. Drain the engine coolant.
3. Disconnect the ECT sensor connector.
4. Remove the ECT sensor.
5. Replace the gasket.
6. Install in the reverse order of removal.
7. Refill the engine coolant.

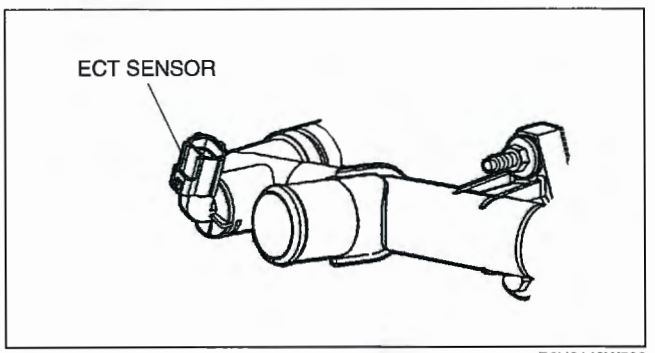

B6U0140W530

ENGINE COOLANT TEMPERATURE (ECT) SENSOR INSPECTION [AJ]

E6U014018840W02

Note
- Perform the following inspection only when directed.

Resistance Inspection
1. Remove the ECT sensor. (See 01–40C–29 ENGINE COOLANT TEMPERATURE (ECT) SENSOR REMOVAL/INSTALLATION [AJ].)
2. Place the ECT sensor in water with a thermometer, and heat the water gradually.
3. Measure the resistance between ECT sensor terminals A and B using an ohmmeter.
   - If the ECT sensor is okay, but the PID value is out of specification, perform the "Circuit Open/Short Inspection".
   - If not as specified, replace the ECT sensor. (See 01–40C–29 ENGINE COOLANT TEMPERATURE (ECT) SENSOR REMOVAL/INSTALLATION [AJ].)

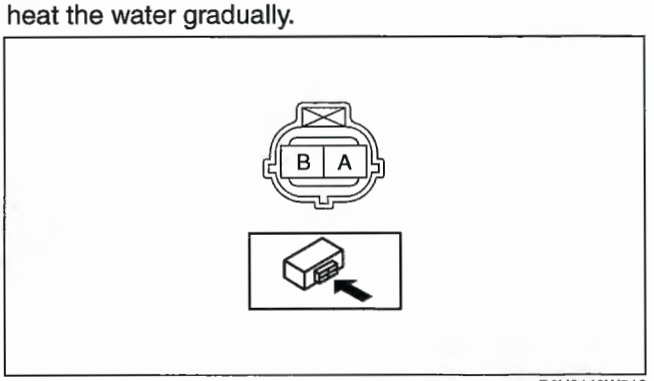

B6U0140W510

Measure the ECT sensor resistance.

ECT (°C {°F})	Resistance (kilohm)
20 {68}	35—40
80 {176}	3.6—4.1

ECT sensor characteristics graph (reference)

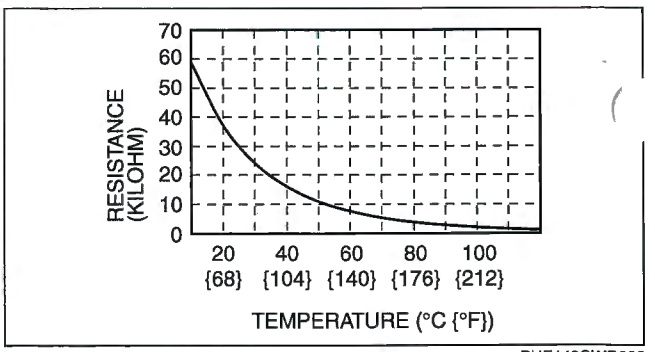

BUE140CWB002

Circuit Open/Short Inspection

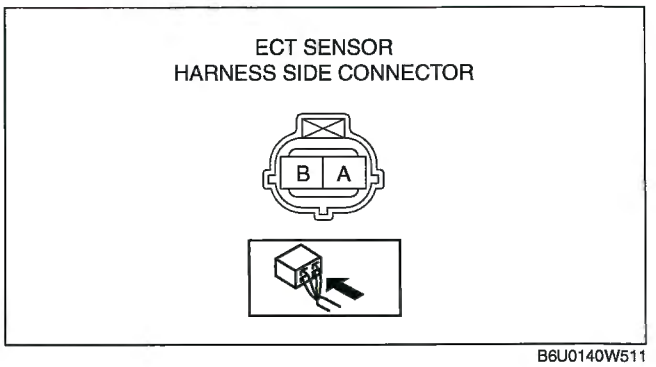

B6U0140W511

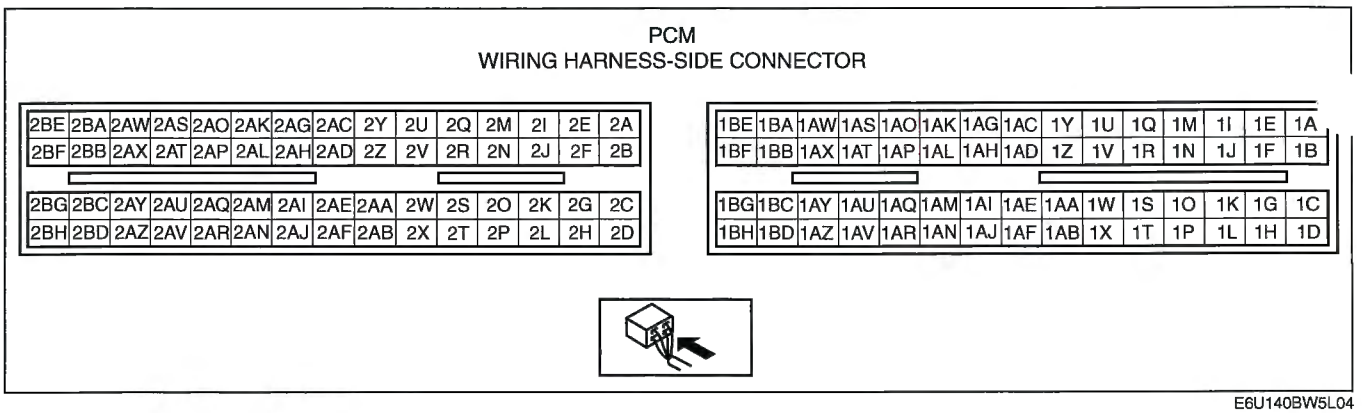

E6U140BW5L04

1. Disconnect the PCM connector. (See 01–40C–5 PCM REMOVAL/INSTALLATION [AJ].)
2. Inspect the following harnesses for open or short circuit. (Continuity check)

Open circuit
- ECT sensor terminal A and PCM terminal 2AQ
- ECT sensor terminal B and PCM terminal 2AJ

Short circuit
- ECT sensor terminal A and power supply
- ECT sensor terminal A and body ground
- ECT sensor terminal B and power supply

INTAKE AIR TEMPERATURE (IAT) SENSOR INSPECTION [AJ]

E6U014018842W01

Note
- Perform the following inspection only when directed.

Resistance Inspection

1. Disconnect the negative battery cable.
2. Disconnect the MAF/IAT sensor connector.
3. Measure the resistance between the MAF/IAT sensor terminals D and E using an ohmmeter.
   - If the IAT sensor is okay, but the PID value is out of specification, perform the "Circuit Open/ Short Inspection".
   - If not as specified, replace the MAF/IAT sensor. (See 01–13C–2 INTAKE AIR SYSTEM REMOVAL/INSTALLATION [AJ].)

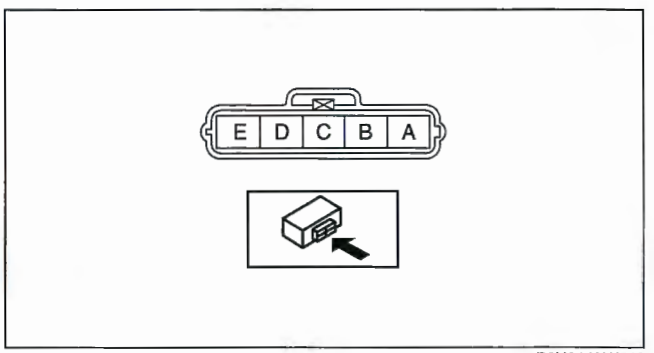

B6U0140W512

Specification

Ambient temperature (°C {°F})	Resistance (kilohm)
–20 {–4}	13.6—18.4
20 {68}	2.21—2.69
60 {140}	0.493—0.667

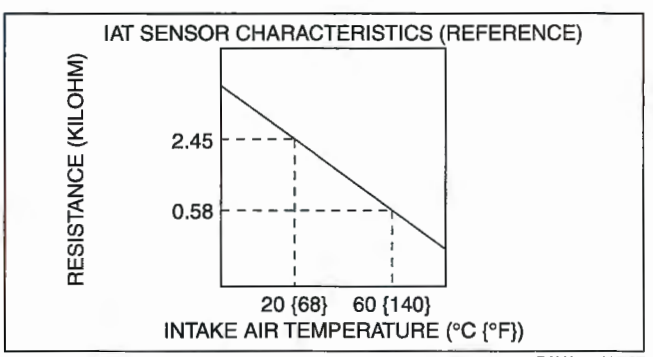

B6U0140W527

Circuit Open/Short Inspection

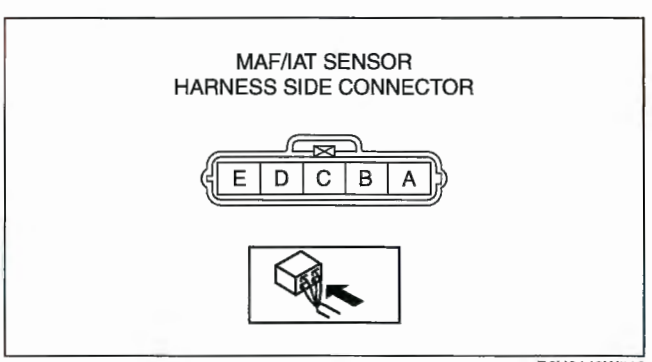

B6U0140W513

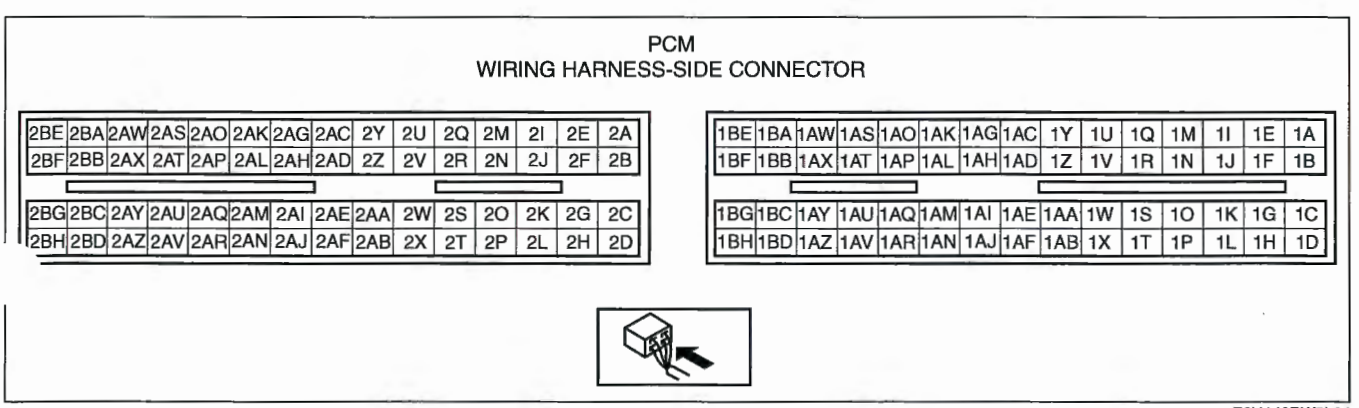

E6U140BW5L04

1. Disconnect the PCM connector. (See 01–40C–5 PCM REMOVAL/INSTALLATION [AJ].)
2. Inspect the following harnesses for open or short circuit. (Continuity check)

Open circuit
- MAF/IAT sensor terminal D and PCM terminal 1AT
- MAF/IAT sensor terminal E and PCM terminal 1BH

Short circuit
- MAF/IAT sensor terminal D and power supply
- MAF/IAT sensor terminal D and body ground
- MAF/IAT sensor terminal E and power supply

MASS AIR FLOW (MAF) SENSOR INSPECTION [AJ]

E6U014018210W01

Note
- Perform the following inspection only when directed.

Visual Inspection
1. Visually inspect for the following on the MAF/IAT sensor.
   - Damage
   - Cracks
   - Bent terminals
   - Terminal rust
     — If any of the above are found, replace the MAF/IAT sensor. (See 01–13C–2 INTAKE AIR SYSTEM REMOVAL/INSTALLATION [AJ].)

MAF Rate and Load Value

Note
- The scan tool shows the MAF rate and load value.

Specification

Item	Intake MAF (g/s)		Engine load calculated value (%)	
	MTX	ATX	MTX	ATX
Idle*1	3.6—3.8	3.8—4.0	Approx. 16.8	Approx. 17.5
Engine speed 2,500 rpm*2	10.5—11.2	10.6—11.4	Approx. 14.6	Approx. 15.2

*1 : 700—800 rpm
*2 : No load, N position or P position

Circuit Open/Short Inspection

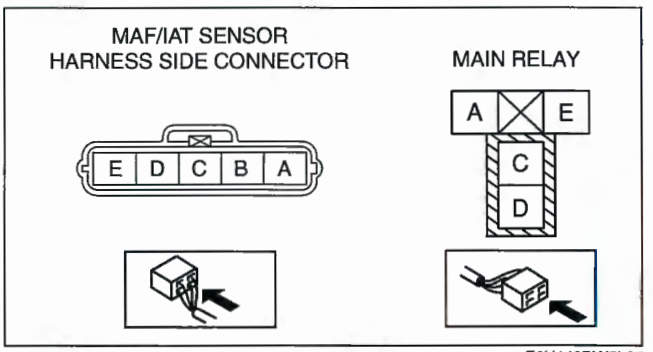

E6U140BW5L05

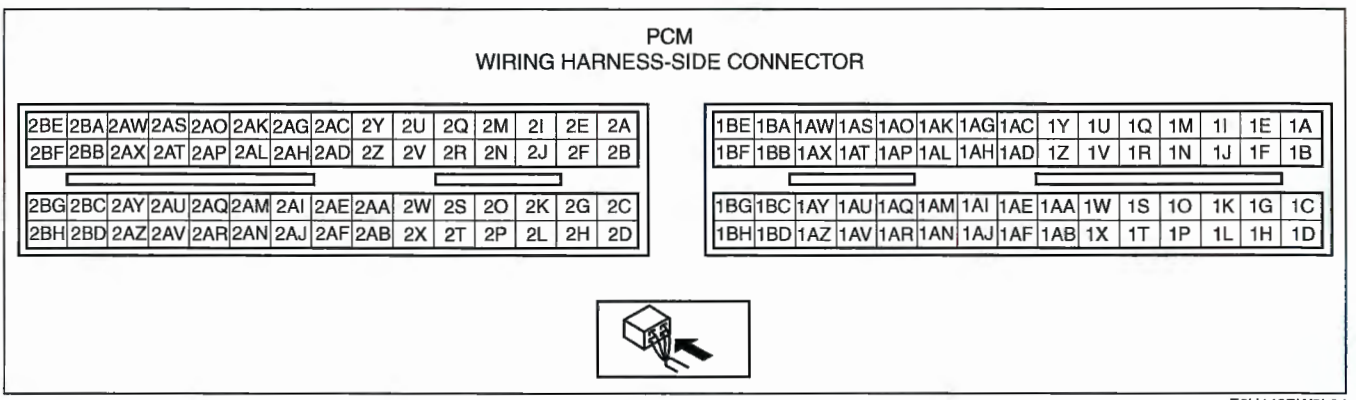

E6U140BW5L04

1. Disconnect the PCM connector. (See 01–40C–5 PCM REMOVAL/INSTALLATION [AJ].)
2. Inspect the following harnesses for open or short circuit. (Continuity check)

en circuit
- MAF/IAT sensor terminal A and main relay terminal C
- MAF/IAT sensor terminal B and PCM terminal 1P
- MAF/IAT sensor terminal C and PCM terminal 1AK

Short circuit
- MAF/IAT sensor terminal A and body ground
- MAF/IAT sensor terminal B and power supply
- MAF/IAT sensor terminal C and power supply
- MAF/IAT sensor terminal C and body ground

HEATED OXYGEN SENSOR (HO2S) INSPECTION [AJ]

E6U014018860W01

Note
- Before performing the following inspection, make sure to follow the troubleshooting flowchart. (See 01–03C–5 FOREWORD [AJ].)

HO2S voltage inspection
1. Warm up the engine to normal operating temperature.
2. Using the WDS or equivalent, monitor the following:
   — Vehicle speed (PID: VSS)
   — Engine speed (PID: RPM)
   — HO2S voltage (PID: O2S11/O2S12/O2S21/O2S22)
3. Drive the vehicle and decelerate the engine speed by releasing the accelerator pedal fully when the engine speed is **3,000 rpm or more**.

4. Verify that the HO2S outputs a voltage of **0.6 V or more**, one time or more, then verify that the HO2S voltage (PID: O2S11/O2S12/O2S21/O2S22) is **0.3 V or less** while decelerating as shown in the figure.

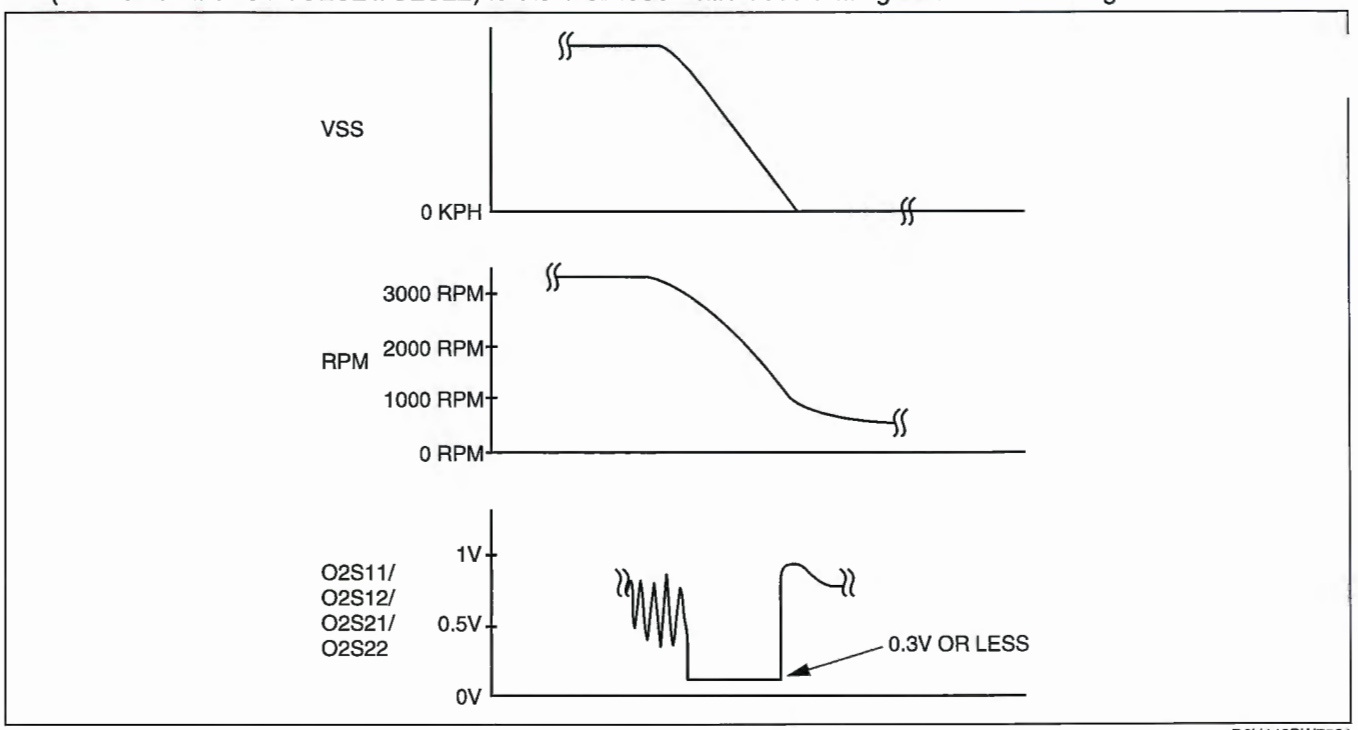

D6U140BW7501

- If not within the specification, inspect the HO2S for an open or short circuit. (See 01–40C–34 HO2S circuit open/short inspection (sensor).) Then if there is no malfunction in the wiring harness, replace the HO2S.

HO2S circuit open/short inspection (sensor)

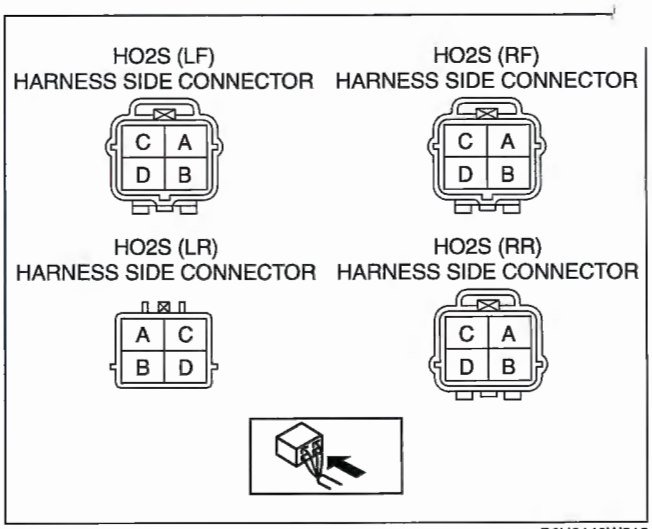

B6U0140W515

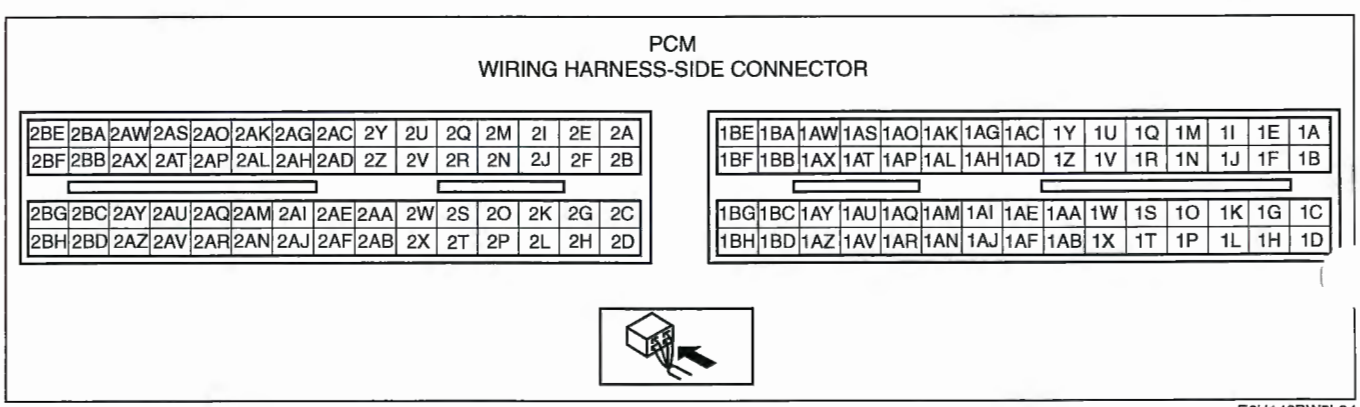

E6U140BW5L04

1. Disconnect the PCM connector.
2. Disconnect the HO2S connector.
3. Inspect the following wiring harnesses for an open or short circuit. (Continuity inspection)

Open circuit

If there is no continuity, there is an open circuit. Repair or replace the wiring harness.

— HO2S (RF) terminal A and PCM terminal 2AK
— HO2S (RF) terminal B and PCM terminal 2AV
— HO2S (LF) terminal A and PCM terminal 2AL
— HO2S (LF) terminal B and PCM terminal 2AX
— HO2S (RR) terminal A and PCM terminal 2AG
— HO2S (RR) terminal B and PCM terminal 2AY
— HO2S (LR) terminal A and PCM terminal 2AH
— HO2S (LR) terminal B and PCM terminal 2BA

Short circuit

- If there is continuity, there is a short circuit. Repair or replace the wiring harness.

— HO2S (RF) terminal A and power supply
— HO2S (RF) terminal A and body ground
— HO2S (RF) terminal B and power supply
— HO2S (LF) terminal A and power supply
— HO2S (LF) terminal A and body ground
— HO2S (LF) terminal B and power supply
— HO2S (RR) terminal A and power supply
— HO2S (RR) terminal A and body ground
— HO2S (RR) terminal B and power supply
— HO2S (LR) terminal A and power supply
— HO2S (LR) terminal A and body ground
— HO2S (LR) terminal B and power supply

HO2S heater resistance inspection

1. Disconnect the HO2S connector.
2. Measure the HO2S resistance between terminals C and D.
   - If not within the specification, replace the HO2S.

HO2S heater resistance
HO2S (RF, LF) heater: 2—50 ohms
HO2S (RR, LR) heater: 2—50 ohms

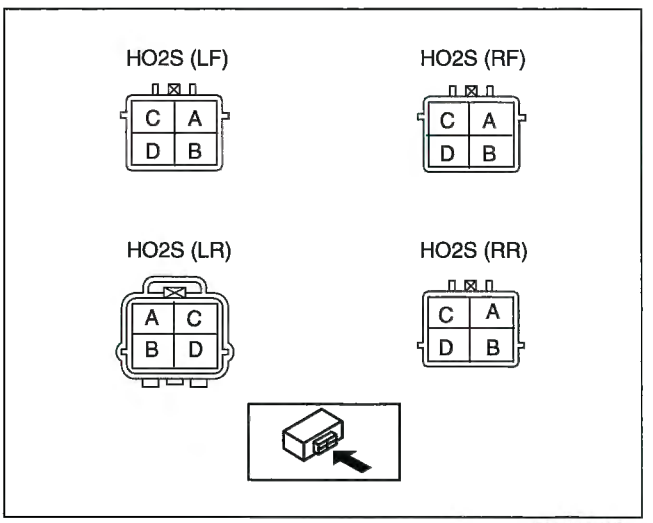

B6U0140W514

HO2S circuit open/short inspection (heater)

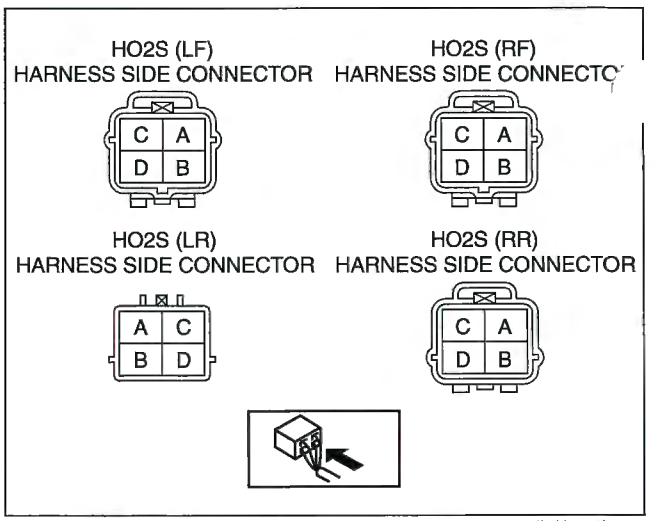

B6U0140W515

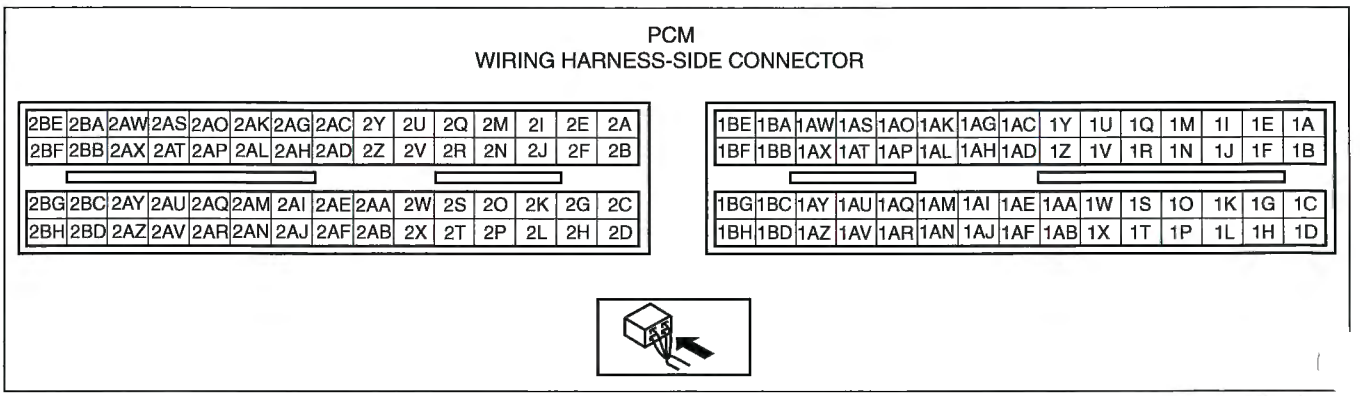

E6U140BW5L04

1. Disconnect the PCM connector.
2. Disconnect the HO2S connector.
3. Inspect the following wiring harnesses for an open or short circuit. (Continuity inspection)

Open circuit

- If there is no continuity, there is an open circuit. Repair or replace the wiring harness.
  - — HO2S (RF) terminal C and ignition switch
  - — HO2S (RF) terminal D and PCM terminal 2AW
  - — HO2S (LF) terminal C and ignition switch
  - — HO2S (LF) terminal D and PCM terminal 2AS
  - — HO2S (RR) terminal C and ignition switch
  - — HO2S (RR) terminal D and PCM terminal 2AT
  - — HO2S (LR) terminal C and ignition switch
  - — HO2S (LR) terminal D and PCM terminal 2AO

Short circuit

- If there is no continuity, there is a short circuit. Repair or replace the wiring harness.
  - HO2S (RF) terminal C and body ground
  - HO2S (RF) terminal D and power supply
  - HO2S (RF) terminal D and body ground
  - HO2S (LF) terminal C and body ground
  - HO2S (LF) terminal D and power supply
  - HO2S (LF) terminal D and body ground
  - HO2S (RR) terminal C and body ground
  - HO2S (RR) terminal D and power supply
  - HO2S (RR) terminal D and body ground
  - HO2S (LR) terminal C and body ground
  - HO2S (LR) terminal D and power supply
  - HO2S (LR) terminal D and body ground

EGR BOOST SENSOR INSPECTION [AJ]

E6U014018211W01

Note
- Perform the following inspection only when directed.
- The following vacuum values are indicated by relative pressure from the EGR boost sensor.

Voltage Inspection

1. Connect the WDS or equivalent to the DLC-2.
2. Turn the ignition switch to the ON position.
3. Select BARO PID on the WDS or equivalent.
4. Verify that the BARO PID (pressure) and barometric pressure are practically equal.
   - If verified, go to next step.
   - If not verified, perform the "Circuit Open/Short Inspection".

   Caution
   - **Do not apply vacuum out of specification. Doing so will damage the EGR boost sensor.**

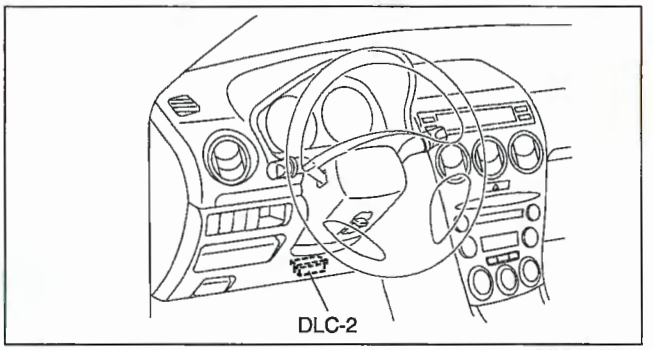

B6U0102W501

5. Apply vacuum of **–25.0 kPa {–187 mmHg, –7.38 inHg}** to the EGR boost sensor, and verify that the BARO PID variation from that of Step 4 is **approx. 25.0 kPa {187 mmHg, 7.38 inHg}**.
   - If verified, replace the EGR boost sensor.
   - If not verified, perform the "Circuit Open/Short inspection".

Circuit Open/Short Inspection

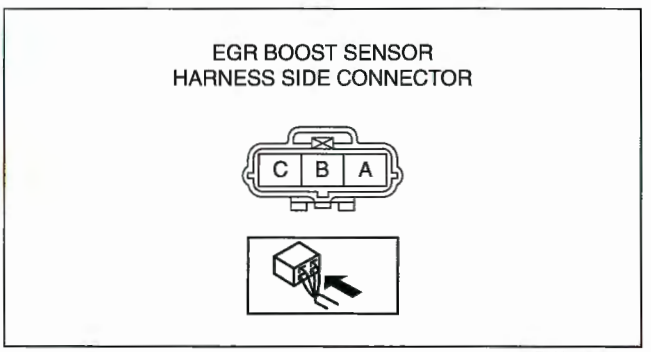

B6U0140W516

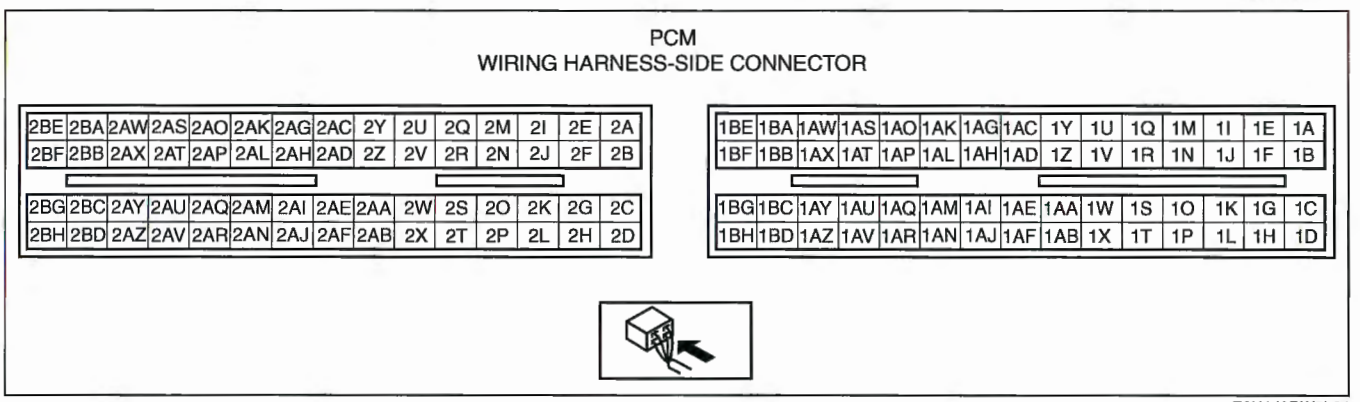

E6U140BW5L04

1. Disconnect the PCM connector. (See 01–40C–5 PCM REMOVAL/INSTALLATION [AJ].)
2. Inspect the following harnesses for open or short circuit. (Continuity check)

Open circuit
- EGR boost sensor terminal A and PCM terminal 1AL
- EGR boost sensor terminal B and PCM terminal 1BD
- EGR boost sensor terminal C and PCM terminal 1AZ

ort circuit
- EGR boost sensor terminal A and power supply
- EGR boost sensor terminal A and body ground
- EGR boost sensor terminal B and power supply
- EGR boost sensor terminal C and power supply
- EGR boost sensor terminal C and body ground

KNOCK SENSOR (KS) REMOVAL/INSTALLATION [AJ]

E6U014018920W01

1. Disconnect the negative battery cable.
2. Disconnect the KS connector.
3. Remove the KS.
4. Install in the reverse order of removal.

Tightening torque
21.2—28.8 N·m {2.17—2.93 kgf·m, 15.7—21.2 ft·lbf}

KNOCK SENSOR (KS) INSPECTION [AJ]

E6U014018920W02

Note
- Perform the following inspection only when directed.

Resistance Inspection
1. Disconnect the negative battery cable.
2. Disconnect the KS connector.
3. Measure the resistance between KS terminals A and B using an ohmmeter.
   - If the KS is okay, but the PID value is out of specification, perform the "Circuit Open/Short Inspection".
   - If not as specified, replace the KS. (See 01–40C–38 KNOCK SENSOR (KS) REMOVAL/INSTALLATION [AJ].)

Specification
Approx. 4.87 megohms (20°C {68°F})

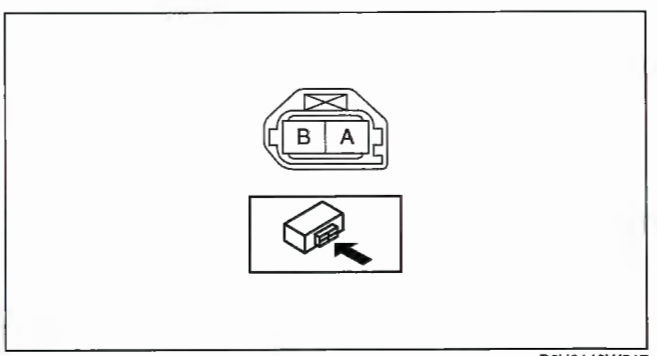

B6U0140W517

Circuit Open/Short Inspection

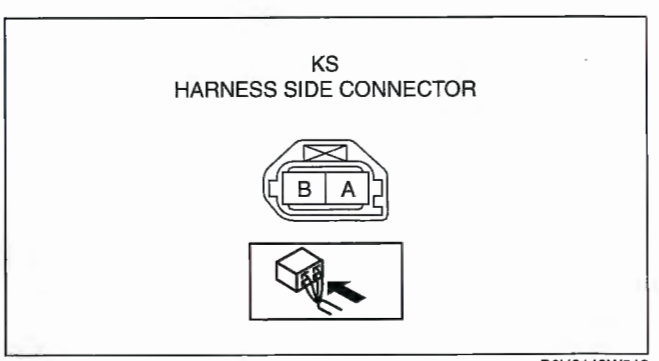

B6U0140W518

PCM
WIRING HARNESS-SIDE CONNECTOR

2BE	2BA	2AW	2AS	2AO	2AK	2AG	2AC	2Y	2U	2Q	2M	2I	2E	2A
2BF	2BB	2AX	2AT	2AP	2AL	2AH	2AD	2Z	2V	2R	2N	2J	2F	2B
2BG	2BC	2AY	2AU	2AQ	2AM	2AI	2AE	2AA	2W	2S	2O	2K	2G	2C
2BH	2BD	2AZ	2AV	2AR	2AN	2AJ	2AF	2AB	2X	2T	2P	2L	2H	2D

1BE	1BA	1AW	1AS	1AO	1AK	1AG	1AC	1Y	1U	1Q	1M	1I	1E	1A
1BF	1BB	1AX	1AT	1AP	1AL	1AH	1AD	1Z	1V	1R	1N	1J	1F	1B
1BG	1BC	1AY	1AU	1AQ	1AM	1AI	1AE	1AA	1W	1S	1O	1K	1G	1C
1BH	1BD	1AZ	1AV	1AR	1AN	1AJ	1AF	1AB	1X	1T	1P	1L	1H	1D

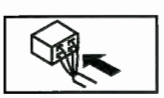

E6U140BW

1. Disconnect the PCM connector. (See 01–40C–5 PCM REMOVAL/INSTALLATION [AJ].)
2. Inspect the following harness for open or short circuit. (Continuity check)

Open circuit
KS terminal B and PCM terminal 2AC
- KS terminal A and PCM terminal 2AF

Short circuit
- KS terminal A and power supply
- KS terminal A and body ground
- KS terminal B and power supply
- KS terminal B and body ground

CAMSHAFT POSITION (CMP) SENSOR REMOVAL/INSTALLATION [AJ]

E6U014018230W01

Caution
- **Do not forcefully pull the wiring harness of the CMP sensor. Doing so will break the harness.**

1. Disconnect the negative battery cable.
2. Disconnect the CMP sensor connector.
3. Remove the CMP sensor.

Caution
- **When foreign material such as an iron chip is on the CMP sensor, it can cause abnormal output from the sensor because of flux turbulence and adversely affect the engine control. Be sure there is no foreign material on the CMP sensor when replacing.**

Install in the reverse order of removal.

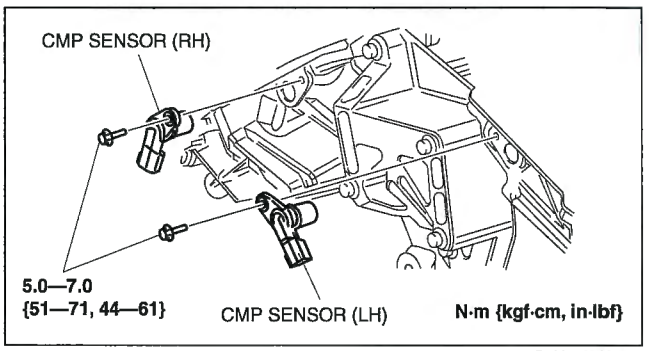

B6U0140W536

CAMSHAFT POSITION (CMP) SENSOR INSPECTION [AJ]

E6U014018230W02

Note
- Perform the following inspection only when directed.

Resistance Inspection
1. Disconnect the negative battery cable.
2. Disconnect the CMP sensor connector.
3. Measure the resistance between the CMP sensor terminals A and B using an ohmmeter.
   - If the CMP sensor is okay, but the PID value is out of specification, perform the "Circuit Open/ Short Inspection".
   - If not as specified, replace the CMP sensor. (See 01–40C–39 CAMSHAFT POSITION (CMP) SENSOR REMOVAL/INSTALLATION [AJ].)

Specification
467—571 ohms

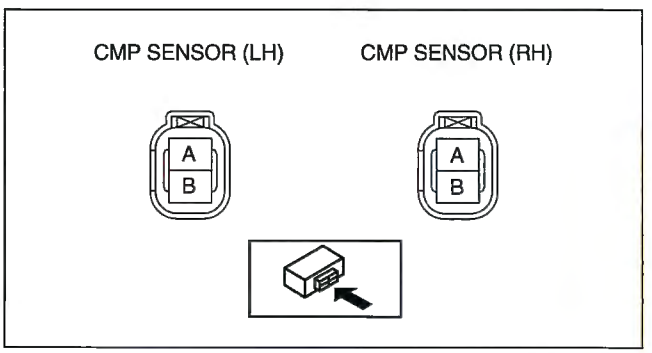

B6U0140W519

Circuit Open/Short Inspection

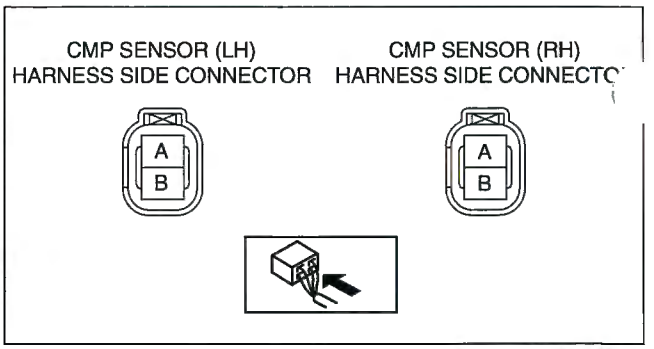

B6U0140W520

PCM
WIRING HARNESS-SIDE CONNECTOR

2BE	2BA	2AW	2AS	2AO	2AK	2AG	2AC	2Y	2U	2Q	2M	2I	2E	2A
2BF	2BB	2AX	2AT	2AP	2AL	2AH	2AD	2Z	2V	2R	2N	2J	2F	2B

2BG	2BC	2AY	2AU	2AQ	2AM	2AI	2AE	2AA	2W	2S	2O	2K	2G	2C
2BH	2BD	2AZ	2AV	2AR	2AN	2AJ	2AF	2AB	2X	2T	2P	2L	2H	2D

1BE	1BA	1AW	1AS	1AO	1AK	1AG	1AC	1Y	1U	1Q	1M	1I	1E	1A
1BF	1BB	1AX	1AT	1AP	1AL	1AH	1AD	1Z	1V	1R	1N	1J	1F	1B

1BG	1BC	1AY	1AU	1AQ	1AM	1AI	1AE	1AA	1W	1S	1O	1K	1G	1C
1BH	1BD	1AZ	1AV	1AR	1AN	1AJ	1AF	1AB	1X	1T	1P	1L	1H	1D

E6U140BW5L04

1. Disconnect the PCM connector. (See 01–40C–5 PCM REMOVAL/INSTALLATION [AJ].)
2. Inspect the following harness for open or short circuit. (Continuity check)

Open circuit
- CMP sensor (RH) terminal A and PCM terminal 2AD
- CMP sensor (RH) terminal B and PCM terminal 2AE
- CMP sensor (LH) terminal A and PCM terminal 2AA
- CMP sensor (LH) terminal B and PCM terminal 2AB

Short circuit
- CMP sensor (RH) terminal A and power supply
- CMP sensor (RH) terminal A and body ground
- CMP sensor (RH) terminal B and power supply
- CMP sensor (RH) terminal B and body ground
- CMP sensor (LH) terminal A and power supply
- CMP sensor (LH) terminal A and body ground
- CMP sensor (LH) terminal B and power supply
- CMP sensor (LH) terminal B and body ground

CRANKSHAFT POSITION (CKP) SENSOR REMOVAL/INSTALLATION [AJ]

E6U014018230W03

Caution
- **Do not forcefully pull the wiring harness of the CKP sensor. Doing so will break the harness.**

1. Disconnect the negative battery cable.
2. Disconnect the CKP sensor connector.
3. Remove the CKP sensor.

Caution
- **When foreign material such as an iron chip is on the CKP sensor, it can cause abnormal output from the sensor because of flux turbulence and adversely affect the engine control. Be sure there is no foreign material on the CKP sensor when replacing.**

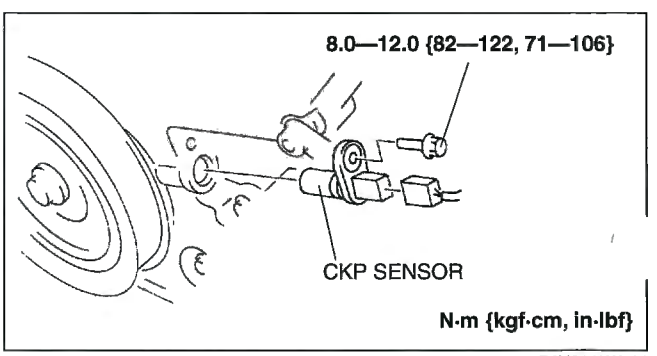

B6U0140W531

4. Install in the reverse order of removal.

CRANKSHAFT POSITION (CKP) SENSOR INSPECTION [AJ]

E6U014018230W04

Note
- Perform the following inspection only when directed.

Resistance Inspection

1. Disconnect the negative battery cable.
2. Disconnect the CKP sensor connector.
3. Measure the resistance between CKP sensor terminals A and B using an ohmmeter.
   - If the CKP sensor is okay, but the PID value is out of specification, perform the "Circuit Open/ Short Inspection".
   - If not as specified, replace the CKP sensor. (See 01–40C–41 CRANKSHAFT POSITION (CKP) SENSOR INSPECTION [AJ].)

Specification
267—325 ohms

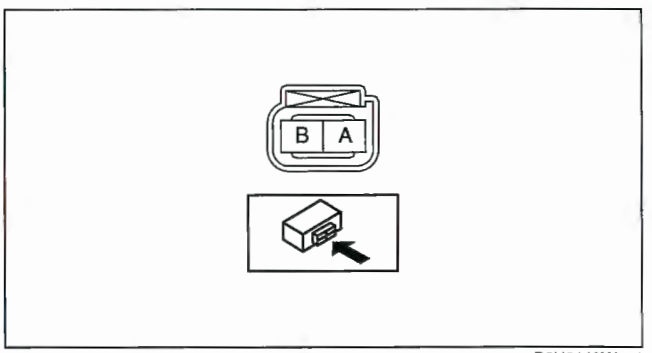

B6U0140W521

Circuit Open/Short Inspection

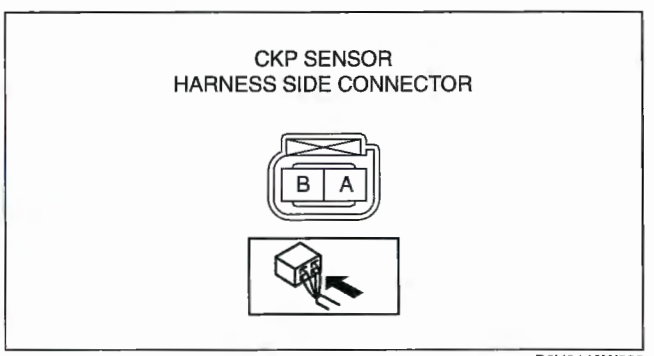

B6U0140W522

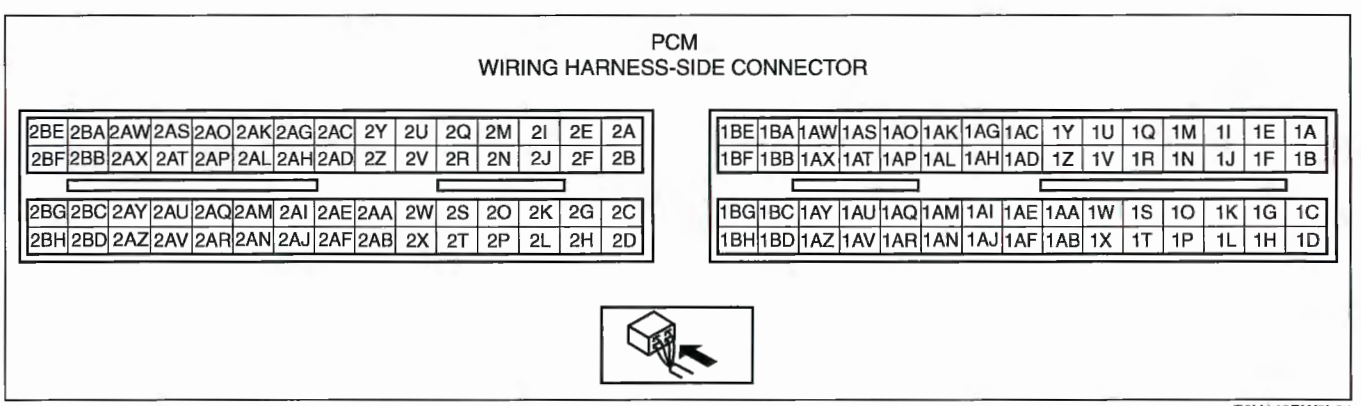

E6U140BW5L04

1. Disconnect the PCM connector. (See 01–40C–5 PCM REMOVAL/INSTALLATION [AJ].)
2. Inspect the following harness for open or short circuit. (Continuity check)

Open circuit

- CKP sensor terminal A and PCM terminal 2Z
- CKP sensor terminal B and PCM terminal 2Y

Short circuit

CKP sensor terminal A and power supply
CKP sensor terminal A and body ground
- CKP sensor terminal B and power supply
- CKP sensor terminal B and body ground

01–50A TECHNICAL DATA [L3, AJ]

ENGINE TECHNICAL DATA [L3, AJ] . . . 01–50A–1

ENGINE TECHNICAL DATA [L3, AJ]

E6U015000000W01

Item				Specifications	
Engine type				L3	AJ
MECHANICAL					
Valve clearance [engine cold]	(mm {in})	IN		0.22—0.28 {0.0087—0.0110}	—
		EX		0.27—0.33 {0.0107—0.0129}	—
Compression pressure	(kPa {kgf/cm^2, psi}) [rpm]	Standard		1,372 {14.0, 199.08} [285]	Compression pressure of lowest cylinder must be within 75% of highest (See 01–10C–6 COMPRESSION INSPECTION [AJ])
		Minimum		960 {9.79, 139.21} [285]	
		Maximum difference between cylinders		196.1 {2.0, 28.5}	
Cylinder head bolt length	(mm {in})	Standard		145.2—145.8 {5.717—5.740}	—
		Maximum		146.5 {5.767}	
Pushing distance of the camshaft oil seal	(mm {in})			—	2.5—3.0 {0.10—0.11} (from the edge of the camshaft oil seal housing)
Pushing distance of the front oil seal	(mm {in})			0—0.5 {0—0.019} (from the edge of the engine front cover)	0—1.0 {0—0.039} (from the edge of the engine front cover)
Pushing distance of the rear oil seal	(mm {in})			—	0—2.0 {0—0.078} (from the edge of the cylinder block)
Idle speed {N range (ATX), Newtral (MTX)}	(rpm)	ATX		650—750	700—800
		MTX		650—750	700—800
Ignition timing	BTDC (°)			8	10
Idle-up speed*1 {N range (ATX), Newtral (MTX)}	(rpm)	E/L ON*2		650—750	650—750
		A/C ON*3		700—800	700—800
		P/S ON*4		650—750	700—800
Idle mixture		HC concentration		Within the regulation	
		CO concentration		Within the regulation	
Oil control valve (OCV)	Resistance (ohm)			6.9—7.9	7.05—7.95
LUBRICATION SYSTEM					
Oil pressure	(kPa {kgf/cm^2, psi} [rpm]			337—591 {3.44—6.03, 33.9—75.5} [3,000]	138—310 {1.40—3.17, 20—45} [1,500]
Oil capacity (approx. quantity)	Total (dry engine)	(L {US qt, Imp qt})		4.6 {4.8, 4.0}	6.2 {6.6, 5.5}
	Oil replacement	(L {US qt, Imp qt})		3.9 {4.1, 3.4}	5.2 {5.5, 4.6}
	Oil and oil filter replacement	(L {US qt, Imp qt})		4.3 {4.5, 3.8}	5.7 {6.0, 5.0}
COOLING SYSTEM					
Coolant capacity (approx. quantity)	(L {US qt, Imp qt})			7.0 {7.4, 6.2}	8.5 {9.0, 7.5}
Radiator cap valve opening pressure	(kPa {kgf/cm^2, psi})			113—142 {1.15—1.44, 16.4—20.4}	94—122 {0.95—1.25, 13.6—17.7}
Thermostat	Initial-opening temperature	(°C {°F})		80—84 {176—183}	84—88 {184—190}
	Full-opening temperature	(°C {°F})		97 {206}	99 {210}
	Full-open lift	(mm {in})		More than 8.0 {0.31}	More than 7.3 {0.29}
Cooling fan motor current	[12 V] (A)			8.5—11.5	11.8—14.8
FUEL SYSTEM					
Fuel line pressure	(kPa {kgf/cm^2, psi})			375—450 {3.9—4.5, 55—65}	430—510 {4.4—5.2, 63—73}

Item					Specifications	
Engine type					L3	AJ
Fuel line hold pressure (kPa {kgf/cm^2, psi})					More than 200 {2.0, 29}	More than 250 {2.5, 36}
Fuel injector	Leakage				Less than 1 drop/2 min	
	Volume (ml {cc, fl oz.}/15 s)				75—79 {75—79, 2.54—2.67}	44—58 {44—58, 1.5—1.9}
	Resistance [20°C {68°F}] (ohm)				11.4—12.6	13.1—14.5
CHARGING SYSTEM						
Battery	Electrolyte gravity				1.22—1.29 [20 °C {68 °F}]	
	Back-up current*5 (mA)				Vehicles with immobilizer system: 25—45 Vehicles without immobilizer system: 30 or less	
	Test load chart (A)	Battery type (5-hour rate)	GROUP 40R (50)		240	
	Slow charge (A)	Battery type (5-hour rate)	GROUP 40R (50)		5.0—6.0	
	Quick charge (A/30 min.)	Battery type (5-hour rate)	GROUP 40R (50)		30	
Generator	Rotor resistance (Between slip rings) (ohm)				2.0—2.3	2.4—2.9
	Brush length	Standard (mm {in})			22.5 {0.89}	
		Minimum (mm {in})			5.0 {0.20}	
	Brush spring force	Standard (N {kgf, lbf})			4.1—5.3 {0.42—0.54, 0.92—1.19}	
		Minimum (N {kgf, lbf})			1.7 {0.17, 0.38}	
	Standard voltage (V)	Ignition switch ON	Terminal	B	B+	
				P	Approx. 1	
				D	Approx. 0	
		Idle [20 °C {68 °F}]	Terminal	B	13—15	
				P	Approx. 3—8	
				D	*7	
	Generated current (Reference) (A)	Terminal B current [Engine speed 1000 rpm]			0*6—80	0*6—90
		Terminal B current [Engine speed 2000 rpm]			0*6—100	0*6—105
IGNITION SYSTEM						
Ignition coil	Resistance	Primary coil (ohm)			—	0.45—1.15 [25 °C {77 °F}]
		Secondary coil (kilohm)			—	5.0—6.0 [25 °C {77 °F}]
		Insulation resistance of case (megohm)			—	10 or more
Firing order					1-3-4-2 CYLINDER No. CRANKSHAFT PULLEY ENGINE 1 2 3 4	1-4-2-5-3-6 CYLINDER No. CRANKSHAFT PULLEY ENGINE 4 5 6 / 1 2 3 LH RH
Spark plug	Type				LFG1 18 110 (ILTR5A-13G), L3G2 18 110, L3Y2 18 110	AJ57 18 110 (AGSF 22FSCM)
	Resistance (kilohm)				3.0—7.5	8.0—20
	Tightening torque (N·m {kgf·cm, in·lbf})				10—14 {1.1—1.4 kgf·m, 8.0—10.3 ft·lbf}	9—20 {91—204, 79—177}
STARTING SYSTEM						

Item				Specifications	
Engine type				L3	AJ
Starter	Commutator diameter	Standard	(mm {in})	29.4 {1.16}	
		Minimum	(mm {in})	28.8 {1.13}	
	Brush length	Standard	(mm {in})	12.3 {0.48}	
		Minimum	(mm {in})	7.0 {0.28}	
	Brush spring force	Standard	(N {kgf, lbf})	21.6 {2.20, 4.84}	MTX: 18.3—24.8 {1.87—2.52, 4.42—5.57}, ATX: 21.6 {2.20, 4.84}
		Minimum	(N {kgf, lbf})	5.9 {0.6, 1.3}	
	Pinion gap		(mm {in})	0.5—2.0 {0.02—0.08}	0 {0}
	No load test	Voltage	(V)	11	
		Current	(A)	90 or less	

Engine oil specification

Item	U.S.A. and CANADA	Except U.S.A. and CANADA
Engine oil grade	(ILSAC)	API SL or ILSAC
Engine oil viscosity	5W-20	

*1 : Excludes temporary idle speed drop just after the electrical loads (E/L) are turned on.
*2 : Headlight is on, Fan switch is above 1st, Cooling fan is operating, Rear window defroster is on.
*3 : A/C switch and fan switch are turned on.
*4 : Steering wheel fully turned.
*5 : Back-up current is the constant flow of current present (for the audio unit, clock, PCM, etc.) when the ignition switch is off and with the ignition key removed.
*6 : Lower limit of the current must be more than 0 A.
*7 : Turn the following electrical loads on and verify that the voltage reading increases.

- Headlights
- Blower motor
- Rear window defroster

01–50B TECHNICAL DATA [L3 WITH TC]

ENGINE TECHNICAL DATA
3 WITH TC] 01–50B–1

ENGINE TECHNICAL DATA [L3 WITH TC]

E6U015000000W02

Item	Specification
Standard valve clearance [Engine cold]	IN: 0.22—0.28 mm {0.0087—0.0110 in} EX: 0.27—0.33 mm {0.0107—0.0129 in}
Compression	Standard:1,280 kPa {13.1 kgf/cm^2, 185.65 psi} [250rpm] Minimum:896 kPa {9.14 kgf/cm^2, 129.96 psi} [250rpm] Maximum difference between cylinders:196.1 kPa {2.0 kgf/cm^2, 28.5 psi}
Cylinder head bolt length	Standard 144.7—145.3 mm {5.700—5.720 in} Maximum: 146 mm {5.748 in}
Front oil seal press-in amount	0—0.5 mm {0—0.019 in}
Oil control valve resistance	6.9—7.9 ohms [20°C {68°F}]
Ignition timing (BTDC)	10°
Idle speed	No load 650—750
Idle-up speed (rpm)	Electrical load on *1 650—750 P/S operation 650—750 A/C operation (medium-pressure switch off) 700—800 A/C operation (medium-pressure switch on) 725—825
Idle mixture	HC concentration: Within the regulation CO concentration: Within the regulation
Engine oil capacity (approx. quantity)	Oil replacement: 5.3 L {5.6 US qt, 4.7 Imp qt} Oil and oil filter replacement: 5.7 L {6.0 US qt, 5.0 Imp qt} Total (dry engine): 6.4 L {6.8 US qt, 5.6 Imp qt}
Oil pressure (reference value) [oil temperature: 100 °C {212 °F}]	297—551 kPa {3.03—5.61 kgf/cm^2, 43.1—79.9 psi} [3,000 rpm]
Engine coolant capacity (approx. quantity)	8.0 L {8.5 US qt, 7.0 Imp qt}
Cooling system cap valve opening pressure	112.8—142.2 kPa {1.15—1.45 kgf/cm^2, 16.4—20.6 psi}
Thermostat initial-opening temperature	80—84 °C {176—183 °F}
Thermostat full-open temperature	97 °C {206 °F}
Thermostat full-open lift	More than 8.0 mm {0.31 in}
Cooling fan motor No.2 current	12.8—16.8 A
Fuel line pressure	410—490 kPa {4.2—4.9 kgf/cm^2, 60—71 psi}
Fuel pump hold pressure	More than 230 kPa {2.3 kgf/cm^2, 33 psi}
Fuel injector resistance	1.0—1.2 ohms [20 °C {68 °F}]
Battery electrolyte specific gravity [20 °C {68 °F}]	1.22—1.29
Battery load test current	55D23L (48): 180 A 80D26L (55): 195 A
Battery back-up current	Vehicles with immobilizer system: 25—45 mA Vehicles without immobilizer system: 30 mA or less
Battery slow charge current	55D23L (48): 4.5—5.5 A 80D26L (55): 5.5—6.5 A
Battery quick charge current [30 min]	55D23L (48): 30 A 80D26L (55): 35 A
Generator standard voltage [IG-ON]	Terminal B: B+ Terminal P: Approx. 1 V Terminal D: Approx. 0 V

Item	Specification
Generator standard voltage [Idle, 20 °C {68 °F}]	Terminal B: 13—15 V Terminal P: Approx. 3—8 V Terminal D: Turn the electrical loads (headlights, blower motor, rear window defroster) on and verify that the voltage reading increases.
Generator rotor resistance (between slip rings) [20 °C {68 °F}]	2.0—2.3 ohm
Generator brush length	Standard: 22.5 mm {0.89 in} Minimum: 5.0 mm {0.20 in}
Generator brush spring force	Standard: 4.1—5.3 N {0.42—0.54 kgf, 0.92—1.19 lbf} Minimum: 1.7 N {0.17 kgf, 0.38 lbf}
Firing order	1-3-4-2 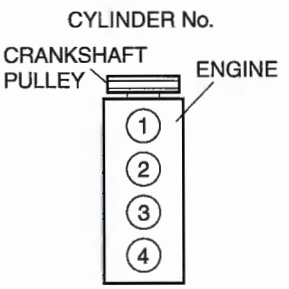
Spark plug type	L3K9 18 110A, L3Y3 18 110
Spark plug gap	0.7—0.8 mm {0.028—0.031 in}
Spark plug resistance [25°C {77 °F}]	3.0—7.5 kilohms
Starter no load test voltage	11 V
Starter no load test current	90 A or less
Starter pinion gap	0.5—2.0 mm {0.02—0.07 in}
Starter armature runout	0.05 mm {0.002 in} max.
Starter commutator diameter	Standard: 29.4 mm {1.16 in} Minimum: 28.8 mm {1.13 in}
Segment groove depth of starter commutator	Standard: 0.4—0.6 mm {0.016—0.023 in} Minimum: 0.2 mm {0.008 in}
Starter brush length	Standard: 12.3 mm {0.48 in} Minimum: 7.0 mm {0.28 in}
Starter brush spring force	Standard: 18.3—24.9 N {1.87—2.53 kgf, 4.12—5.59 lbf} Minimum: 5.9 N {0.6 kgf, 1.3 lbf}

*1 : When the following electrical loads are on: Headlights, rear defroster, cooling fan No.1, cooling fan No.2, and the blower motor (2-step or more.)

Generator generated current (reference value) [Conditions] Ambient temperature: 20 °C {68 °F}, Voltage: 13.5 V, Engine hot

Engine speed (rpm)	Terminal B current (Lower limit of current must be more than 0 A.)
1,000	0—80 A
2,000	0—100 A

Engine oil specification

Item	U.S.A. and CANADA	Except U.S.A. and CANADA
Engine oil grade	 (ILSAC)	  (ILSAC) API SL or ILSAC
Engine oil viscosity	5W-30	

01–60A SERVICE TOOLS [L3, AJ]

ENGINE SST [L3, AJ] 01–60A–1

ENGINE SST [L3, AJ]

E6U016000000W01

1: Mazda SST number
2: Global SST number
Example

1:49 UN01 052 2:310–D005 Spring lock coupler tool (green)	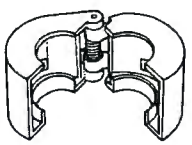

1:49 G032 354 2:– Adjusting wrench (L3) 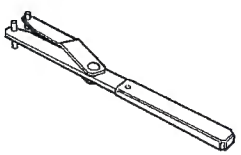	1:– 2:303–507 Crankshaft TDC timing peg (L3) 	1:– 2:205-126 Holding tool (L3) 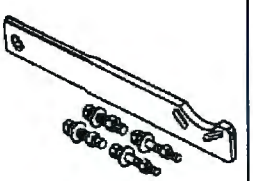
1:– 2:205–072–02 Crankshaft ‘lding tool pins 3) 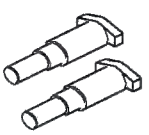	1:49 UN30 3465 2:303–465 Camshaft alignment timing tool (L3) 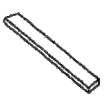	1:49 H010 401 2:– Oil seal installer (L3) 
1:49 E011 1A1 2:– Holder set (AJ) 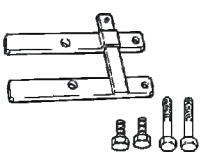	1:49 H012 006 2:– Bolt (AJ) 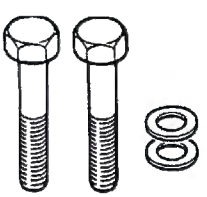	1:49 S120 710 2:– Coupling flange holder (AJ) 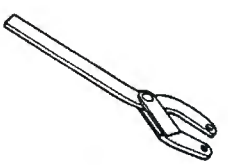
1:49 UN30 3464 2:303–464 Camshaft seal replacer (AJ) 	1:49 UN30 3463 2:303–463 Camshaft seal protector (AJ) 	1:49 UN30 3456 2:303–456 Water pump pulley plate (AJ) 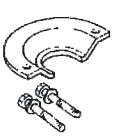
1:49 UN30 3457 2:303–457 Shaft protector (AJ) 	1: – 2:134-01049 Evaporative emission system tester 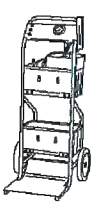	1:49 UN21 1185 2:211–185 Pump pulley replacer (AJ) 

1:49 UN30 3009 2:303–009 Crankshaft damper remover (AJ) 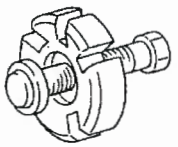	1:49 UN01 002 2:303–102 Crankshaft damper replacer (AJ) 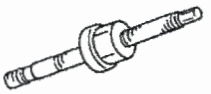	1:49 UN30 3384 2:303–384 Rear crankshaft adapter bolts (AJ) 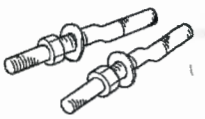
1:49 UN30 3335 2:303–335 Crankshaft seal installer/aligner (AJ) 	1:49 UN01 070 2:303–178 Crankshaft seal installer (AJ) 	1:49 D032 316 2:– Protractor 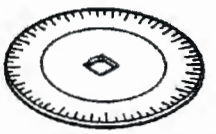
1:49 UN30 3050 2:303-050 Engine lifting bracket (AJ) 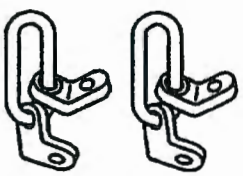	1:49 L018 001 2:– O2 sensor wrench 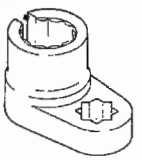	1:49 B019 901B 2:– Gauge 
1:49 N013 101A 2:– Body 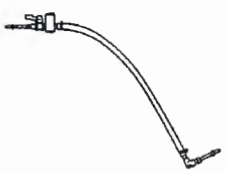	1:49 N013 102A 2:– Adapter Hose 	1:49 F042 001 2:– Wrench 
1:49 1352 060 2:– Ring gear brake (AJ) 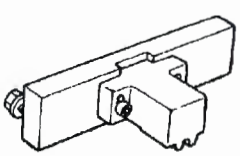	1:49 UN30 3328 2:303–328 Rear oil seal replacer 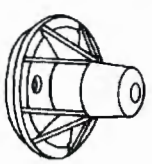	1:– 2:418-FS475 WDS 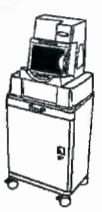
1:49 L017 5A0 2:– Support hanger (AJ) 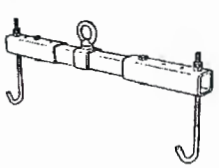	1:49 E017 5A0 2:– Engine support 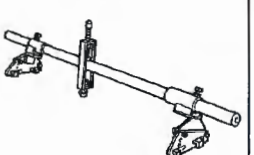	1:49 C017 5A0 2:– Engine support 
1:49 9200 145 2:– Radiator cap tester adapter set (L3) 	1:49 L014 001A 2:– Pressure gauge attachment (AJ) 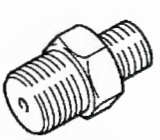	1:49 0187 280A 2:– Oil pressure gauge 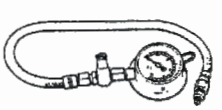
1:49 E019 001 2:– Adapter (L3) 	—	—

01–60B SERVICE TOOLS [L3 WITH TC]

ENGINE SST [L3 WITH T/C]..... 01–60B–1

ENGINE SST [L3 WITH T/C]

E6U016000000W03

1: Mazda SST number
2: Global SST number

Example

1:49 UN01 052 2:310–D005 Spring lock coupler tool (green)	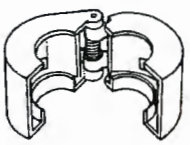

1:49 G032 354 2:– Adjusting wrench	1:– 2:303–507 Crankshaft TDC timing peg	1:– 2:205-126 Holding tool
1:– 2:205–072–02 Crankshaft ‘ding tool pins	1:49 UN30 310610 2:303–1061 Camshaft alignment timing tool	1:49 H010 401 2:– Oil seal installer
1:49 G013 101 2:– Remover	49 C017 5A0* 2: – Engine support set	1:49 9200 145 2:– Radiator cap tester adapter set
1:49 L018 002 2:– Serrated bit	1:49 0187 280A 2:– Oil pressure gauge	1:49 E019 001 2:– Adapter
1:– 2:418-FS475 WDS	1: – 2:134-01049 Evaporative emission system tester	1:49 H080 740A 2: – Pressure tester

SERVICE TOOLS [L3 WITH TC]

1:49 N013 101A 2:– Body (Components part of 49 N013 1A0D) 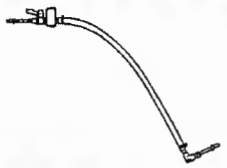	1:49 N013 102A 2:– Adapter Hose (Components part of 49 N013 1A0D) 	1:49 B019 901B 2:– Gauge (Components part of 49 N013 1A0D) 
1:49 F042 001 2:– Wrench 	1:49 L018 001 2:– O2 sensor wrench 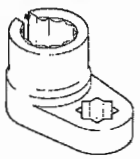	1:49 UN30 3328 2:303–328 Rear oil seal replacer 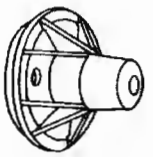
1:49 E042 001 2:– Remover 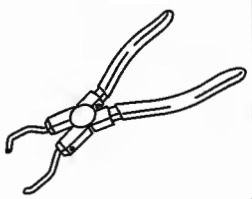	–	–

* : The SST (49 E017 5A0) can be used in place of the SST (49 C017 5A0).

SUSPENSION

02
SECTION

GENERAL PROCEDURES 02-10
WHEEL ALIGNMENT 02-11
WHEEL AND TIRES 02-12
FRONT SUSPENSION 02-13
REAR SUSPENSION 02-14
TECHNICAL DATA 02-50
SERVICE TOOLS 02-60

02–10 GENERAL PROCEDURES

PRECAUTION (SUSPENSION) 02–10–1
Wheels and Tires
Removal/Installation 02–10–1
Suspension Links
Removal/Installation 02–10–1
Brake Lines
Disconnection/Connection 02–10–1
Power Steering Components
Removal/Installation 02–10–1

PRECAUTION (SUSPENSION)

E6U021000000W01

Wheels and Tires Removal/Installation

1. When a wheel is installed, tighten it to **88—118 N·m {9.0—12.0 kgf·m, 65.0—87.0 ft·lbf}**.

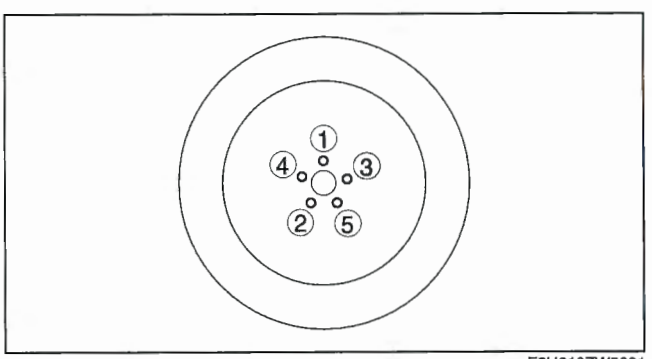

E5U610ZW5001

Suspension Links Removal/Installation

1. Tighten any part of the suspension that uses rubber bushings only after the vehicle has been lowered to the ground and unloaded.

Note
- Unloaded: Fuel tank is full. Engine coolant and engine oil are at specified levels. Spare tire, jack and tools are in designated position.

Brake Lines Disconnection/Connection

Caution
- **Brake fluid will damage painted surfaces. If brake fluid does get on a painted surface, wipe it off immediately.**

1. Tighten the brake pipe flare nut using the **SST** (49 0259 770B). Be sure to modify the brake pipe flare nut tightening torque to allow for use of a torque wrench-**SST** combination. (See 00–00–17 Torque Formulas.)
2. If any brake line has been disconnected anytime during the procedure, add brake fluid, bleed the brakes, and inspect for leakage after the procedure has been completed.

Power Steering Components Removal/Installation

1. If any power steering fluid line has been disconnected anytime during the procedure, add ATF M-III, M-V, or equivalent (e.g. Dexron®III), bleed the fluid line, and inspect for leakage after the procedure has been completed.

02–11 WHEEL ALIGNMENT

WHEEL ALIGNMENT
RE-INSPECTION..... 02–11–1
FRONT WHEEL ALIGNMENT..... 02–11–2
Specification (Unloaded)*1..... 02–11–2
Maximum Steering Angle
Adjustment..... 02–11–2
Total Toe-in Adjustment..... 02–11–3
REAR WHEEL ALIGNMENT 02–11–3
Specification (Unloaded)*1 02–11–3
Camber Adjustment..... 02–11–4
Total Toe-in Adjustment..... 02–11–4

WHEEL ALIGNMENT PRE-INSPECTION

E6U021100000W01

1. Inspect the tire inflation, and adjust to the recommended pressure as necessary.
2. Inspect the front wheel bearing play and correct it if necessary. (See 03–11–1 Wheel Bearing Play Inspection.)
3. Inspect the wheel and tire runouts. (See 02–50–1 SUSPENSION TECHNICAL DATA.)
4. Inspect the ball joints and steering linkage for excessive looseness.
5. Shake the vehicle up and down to inspect the operation of the shock absorbers.

Note
- The vehicle must be on level ground and unloaded.
- Unloaded: Fuel tank is full. Engine coolant and engine oil are at specified level. Spare tire, jack and tools are in designated position.

6. Measure the height from the center of the wheel to the fender brim. The difference between the left and right measurement must not exceed **10 mm {0.39 in}**.

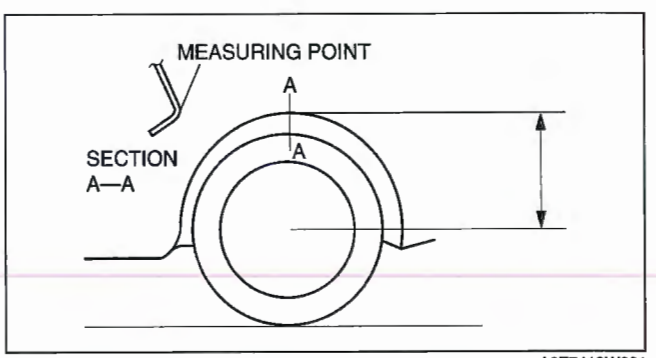

A6E7412W001

FRONT WHEEL ALIGNMENT

E6U021100000W02

Specification (Unloaded)*1

Front wheel alignment [4SD, 5HB]

Item		Specification				
Fuel gauge indication		Empty	1/4	1/2	3/4	Full
Maximum steering angle	Inner	34°±3°				
	Outer	29°±3°				
Total toe-in	(mm {in})	Tire: 2±4 {0.08±0.16}, Rim inner: 1.4±2.8 {0.06±0.12}				
	(degree)	0°11′±0°22′				
Caster angle*2 (Reference value)		3°37'±1°	3°39'±1°	3°41'±1°	3°44'±1°	3°47'±1°
Camber angle*2 (Reference value)	L3	–0°16′±1°			–0°17′±1°	
	AJ	–0°17′±1°			–0°18′±1°	
Steering axis inclination (Reference value)	L3	5°26'			5°28'	
	AJ	5°30'			5°29'	

Front wheel alignment [WGN]

Item		Specification				
Fuel gauge indication		Empty	1/4	1/2	3/4	Full
Maximum steering angle	Inner	34°±3°				
	Outer	29°±3°				
Total toe-in	(mm {in})	Tire: 2±4 {0.08±0.16}, Rim inner: 1.4±2.8 {0.06±0.12}				
	(degree)	0°11′±0°22′				
Caster angle*2 (Reference value)		3°29'±1°	3°32'±1°	3°34'±1°	3°37'±1°	3°39'±1°
Camber angle*2 (Reference value)		–0°16′±1°			–0°17′±1°	
Steering axis inclination (Reference value)		5°28'			5°27'	

*1 : Engine coolant and engine oil are at specified level. Spare tire, jack and tools are in designated position.
*2. Difference between left and right must not exceed **1°30'** .

Front wheel alignment [4SD AWD]

Item		Fuel gauge indication				
		Empty	1/4	1/2	3/4	Full
Maximum steering angle	Inner	36°±3°				
	Outer	30°±3°				
Total toe-in	(mm {in})	Tire: 2±4 {0.08±0.16}, Rim inner: 1±3 {0.04±0.12}				
	(degree)	0°11′±0°22′				
Caster angle*2 (reference value)		3°46'±1°	3°48'±1°	3°50'±1°	3°51'±1°	3°53'±1°
Camber angle*2(reference value)		-0°16'±1°			-0°17'±1°	
Steering axis inclination (reference value)		5°28'			5°30'	

*1 : Engine coolant and engine oil are at specified level. Spare tire, jack and tools are in designated position.
*2. Difference between left and right must not exceed 1°30'.

Maximum Steering Angle Adjustment

1. Loosen the tie-rod end locknuts.
2. Remove the steering gear boot clamp.
3. Turn the tie rods to equalize the length L.

   Maximum left/right difference
   3 mm {0.12 in}

4. Turn the tie rods equally to provide the correct maximum steering angle.
5. Tighten the tie-rod end locknuts.

   Tightening torque
   68.6—98.0 N·m {7.00—9.99 kgf·m, 50.6—72.2 ft·lbf}

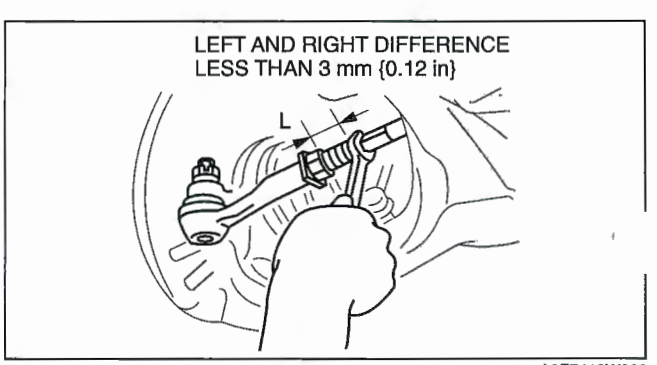

A6E7412W002

6. Verify that the boot is not twisted, and install the boot clamp.
7. Adjust the toe-in after adjusting the steering angle.

tal Toe-in Adjustment

1. Center the steering wheel and confirm that the vehicle wheels/tires are pointing straight.
2. Loosen the left and right tie-rod end locknuts and turn the tie-rods equally. Both tie rods are right threaded, so turning the right tie-rod toward the front of the vehicle and the left toward the rear increases toe-in.

Note
- Turning both tie-rods one complete turn changes toe-in by **about 6 mm {0.24 in} (0°36')**.

3. Tighten the tie-rod end locknuts to the specified torque.

Tightening torque
68.6—98.0 N·m {7.00—9.99 kgf·m, 50.6—72.2 ft·lbf}

4. Verify that the boot is not twisted, and install the boot clamp.

REAR WHEEL ALIGNMENT

E6U021100000W03

Specification (Unloaded)*1

Rear wheel alignment [4SD, 5HB]

Item		Specification				
Fuel gauge indication		Empty	1/4	1/2	3/4	Full
Total toe-in	(mm {in})	Tire: 2±4 {0.08±0.16}, Rim inner: 1.4±2.8 {0.06±0.12}				
	(degree)	0°11′±0°22′				
Camber angle*2		−1°05′±1°	−1°07′±1°	−1°09′±1°	−1°11′±1°	−1°13′±1°
Thrust angle		0°±0°48′				

Rear wheel alignment [WGN]

Item		Specification				
Fuel gauge indication		Empty	1/4	1/2	3/4	Full
Total toe-in	(mm {in})	Tire: 2±4 {0.08±0.16}, Rim inner: 1.4±2.8 {0.06±0.12}				
	(degree)	0°11′±0°22′				
Camber angle*2		−0°59′±1°	−1°00′±1°	−1°02′±1°	−1°04′±1°	−1°06′±1°
Thrust angle		0°±0°48′				

Rear wheel alignment [4SD AWD]

Item		Fuel gauge indication				
		Empty	1/4	1/2	3/4	Full
Total toe-in	(mm {in})	Tire: 2±4 {0.08±0.16}, Rim inner: 1±3 {0.04±0.12}				
	(degree)	0°11′±0°22′				
Camber angle*2		−1°28′±1°	−1°30′±1°	−1°33′±1°	−1°35′±1°	−1°37′±1°
Thrust angle	(degree)	0°±0°48′				

*1 : Engine coolant and engine oil are at specified level. Spare tire, jack and tools are in designated position.
*2 : Difference between left and right must not exceed **1°30'** .

Note
- Adjust the toe-in after adjusting the camber.

Camber Adjustment

1. Loosen the cam nut on the lower arm.
2. Turn the adjusting cam bolt to provide the correct camber angles as indicated.

	Left wheel	Right wheel
Positive direction	Clockwise	Counter-clockwise
Negative direction	Counter-clockwise	Clockwise

3. Tighten the cam nut.

Tightening torque
86.2—116.6 N·m {8.79—11.88 kgf·m, 63.58—85.99 ft·lbf}

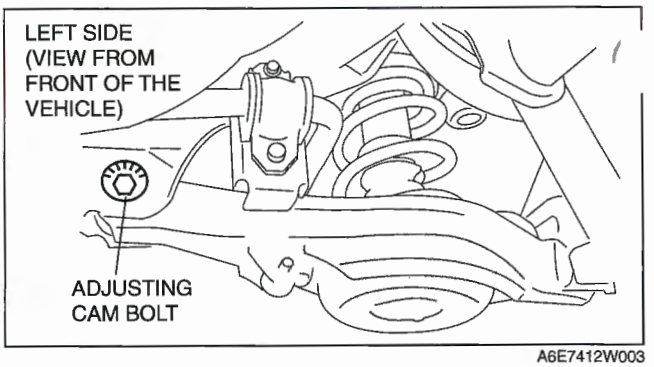

A6E7412W003

Total Toe-in Adjustment

1. Loosen the locknut of the lateral link.

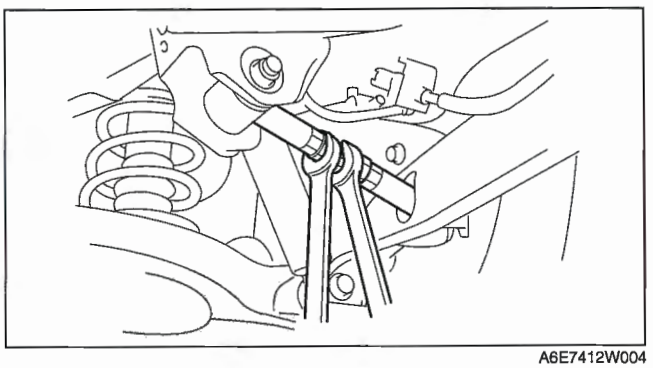
A6E7412W004

2. Adjust the toe-in turning the adjusting link.

Specification
Total Toe-in: 2±4 mm {0.08±0.16 in}

Note
- Toe change amount: **0°43′** / one rotation

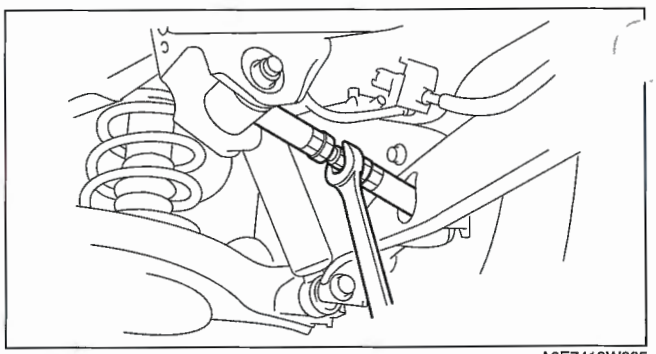
A6E7412W005

3. Tighten the locknut.

Tightening torque
68.0—98.1 N·m {7.0—10.0 kgf·m, 50.2—72.3 ft·lbf}

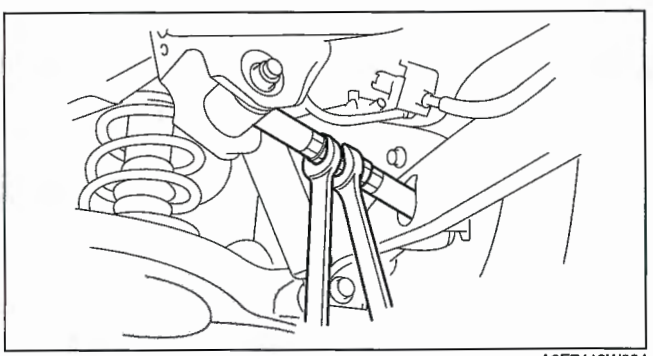
A6E7412W004

02–12 WHEEL AND TIRES

WHEEL AND TIRE SPECIFICATION . . . 02–12–1
WHEEL BALANCE ADJUSTMENT (ALUMINUM ALLOY WHEEL) 02–12–2
Adhesive-type Balance Weight (Outer) **02–12–2**
Knock-type Balance Weight (Inner) **02–12–3**
Remaining Amount of Unbalance Confirmation **02–12–3**

WHEEL AND TIRE SPECIFICATION

E6U021200000W02

Item			Specification		
Standard tire and wheel					
Wheel	Size		16 × 6 1/2JJ	17 × 7JJ	18 × 7J
	Offset	(mm {in})	55 {2.17}	60 {2.36}	55 {2.17}
	Pitch circle diameter	(mm {in})	114.3 {4.50}		
	Material		Steel	Aluminum alloy	
Tire	Size		P205/50R16 91V	P215/50R17 93V	L3 with TC: 215/45R18 93Y Except L3 with TC: 215/45R18 93W
	Air pressure (kPa {kgf/cm^2, psi})	Front	220 {2.2, 32}	220 {2.2, 32}	L3 with TC: 260 {2.6, 38} Except L3 with TC: 240 {2.4, 35}
		Rear			
	Remaining tread	(mm {in})	1.6 {0.06}		
Wheel and tire	Wheel and tire runout (mm {in})	Radial direction	1.5 {0.06} max.		
		Lateral direction	2.5 {0.10} max.	2.0 {0.08} max.	
	Wheel imbalance	(g {oz})	8 {0.28} max.	Adhesive-type*1: 11 {0.39} max. Knock-type*2: 7 {0.25} max.	Adhesive-type*1: 10 {0.35} max. Knock-type*2: 6 {0.21} max.
Temporary spare tire					
Wheel	Size		16×4T		L3 with TC: 17×4T Except L3 with TC: 16×4T
	Offset	(mm {in})	40 {1.57}		
	Pitch circle diameter	(mm {in})	114.3 {4.50}		
	Material		Steel		
Tire	Size		T115/70 D16		L3 with TC: T145/70D 17 Except L3 with TC: T115/70 D16
	Air pressure	(kPa {kgf/cm^2, psi})	420 {4.2, 60}		
Wheel and tire	Wheel and tire runout (mm {in})	Radial direction	2.0 {0.08} max.		
		Lateral direction	2.5 {0.10} max.		

*1 : Total weight exceeds **160 g {5.65 oz}**.
*2 : One balance weight: **60 g {2.12 oz}** max. If the total weight exceeds **100 g {3.53 oz}** on one side, rebalance after moving the tire around on the rim. Do not use three or more balance weights.

WHEEL BALANCE ADJUSTMENT (ALUMINUM ALLOY WHEEL)

E6U021200000W01

Caution
- **Adjust the outer wheel balance first, then the inner wheel balance.**
- **Be careful not to scratch the wheels.**

Adhesive-type Balance Weight (Outer)

1. Remove the old balance weight from the wheel.
2. Remove the double-sided adhesive tape remaining on the wheel, then clean and degrease the bonding area.
3. Set the wheel on a wheel balancer, measure the amount of unbalance and the position with the mode set for knock-type balance weight.
4. Multiply the amount of unbalance by **1.6** to get the balance weight value.
5. Select a balance weight closest to the weight value and attach the balance weight on the position (outer) indicated by the wheel balancer.

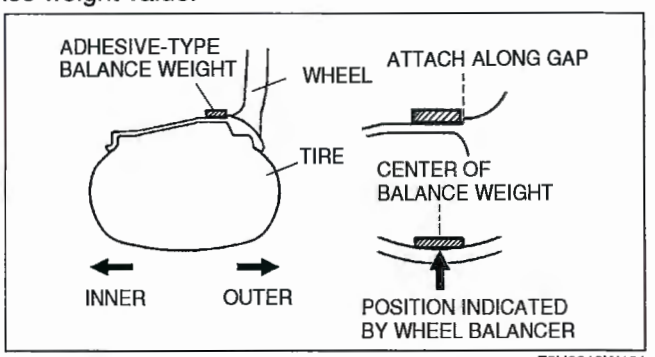

Z5U0212W101

Example calculation of balance weight value
Indicated amount of unbalance: 23 g {0.81 oz}
23 g {0.81 oz}×1.6 = 36.8 g {1.30 oz}
Selected balance weight value: 35 g {1.24 oz}

Note
- When selecting a balance weight, select one closest to the calculated value.
  Example: **32.4 g {1.14 oz}= 30 g {1.06 oz}, 32.5 g {1.15 oz}= 35 g {1.24 oz}**

Caution
- **Use a genuine balance weight or equivalent (steel).**
- **When attaching the weight balance, press the balance weight with a force of 25 N {2.5 kgf, 5.5 lbf} per 5 g for 2 seconds or more.**

6. If attaching 2 balance weights, position them so that each is on either side of the position indicated by the wheel balancer.

Caution
- **Do not attach weight balances in a row.**
- **Do not overlap the balance weights.**
- **Total weight must not exceed 160 g {5.65 oz}.**

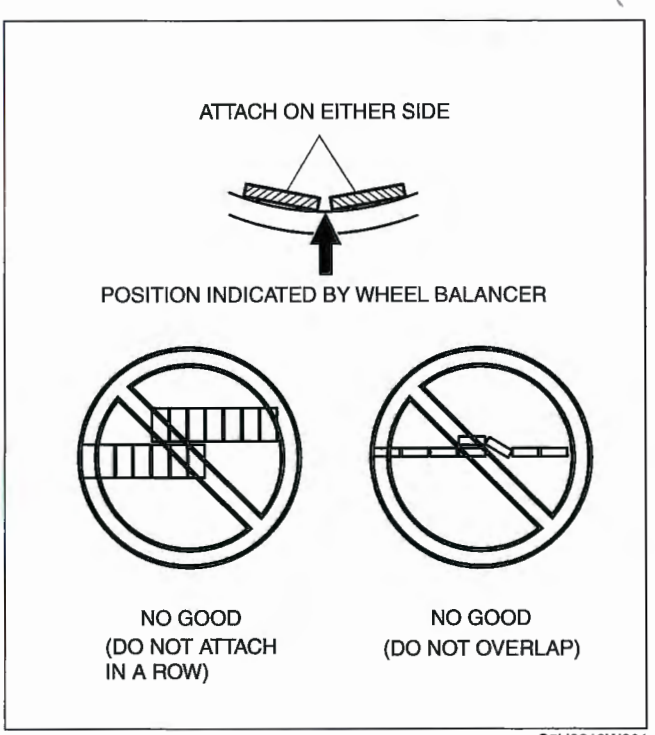

C5U0212W001

Knock-type Balance Weight (Inner)

1. Measure the amount of unbalance with a wheel balancer.
2. Attach a balance weight corresponding to the measured weight value on the position (inner) indicated by the wheel balancer.

Caution

- **Do not attach 3 or more balance weights.**
- **One balance weight must not exceed 60 g {2.12 oz}, and a total of 2 balance weights must not exceed 100 g {3.53 oz}.**

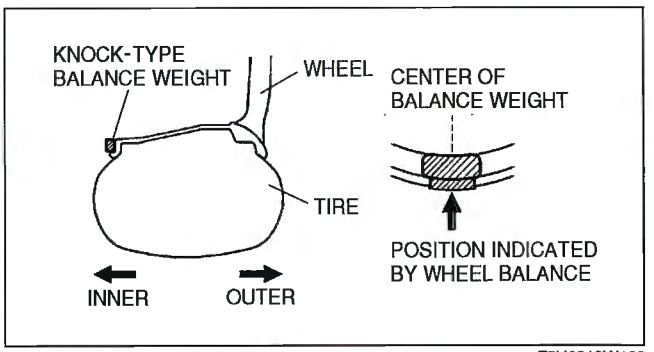

Z5U0212W103

Remaining Amount of Unbalance Confirmation

1. After installing the outer and inner balance weights, operate the wheel balancer again.
2. Confirm that the remaining unbalance does not exceed the following on either side.
   - If the remaining unbalance exceeds the specifications, adjust the wheel balance again.

Specifications

	Outer (Adhesive-type)	Inner (Knock-type)
16 inch wheel	13 g {0.46 oz}	8 g {0.28 oz}
17 inch wheel	11 g {0.39 oz}	7 g {0.25 oz}
18 inch wheel	10 g {0.35 oz}	6 g {0.21 oz}

02–13 FRONT SUSPENSION

FRONT SUSPENSION LOCATION INDEX 02–13–2
FRONT SHOCK ABSORBER AND SPRING REMOVAL/INSTALLATION .. 02–13–3
Bolt (Front Shock Absorber Lower Side) Removal Note 02–13–4
Damper Fork Installation Note 02–13–4
Front Shock Absorber and Coil Spring Installation Note 02–13–4
FRONT SHOCK ABSORBER AND SPRING DISASSEMBLY/ASSEMBLY 02–13–5
Piston Rod Nut Removal Note 02–13–6
Coil Spring Installation Note 02–13–6
FRONT SHOCK ABSORBER INSPECTION 02–13–7
FRONT SHOCK ABSORBER DISPOSAL 02–13–7
FRONT UPPER ARM REMOVAL/INSTALLATION 02–13–8
Front Upper Arm Ball Joint Removal Note 02–13–9
Bolt (Front Upper Arm) Removal Note 02–13–9
Clip Installation Note 02–13–9
FRONT UPPER ARM INSPECTION 02–13–9
FRONT LOWER ARM (FRONT) REMOVAL/INSTALLATION 02–13–10
Front Lower Arm (Front) Ball Joint Removal Note 02–13–11
Steering Knuckle Bushing Installation Note 02–13–12
Front Lower Arm (Front) Bushing (Inner Side) Removal Note 02–13–12
Front Lower Arm (Front) Bushing (Outer Side) Removal Note 02–13–13
Front Lower Arm (Front) Bushing (Outer Side) Installation Note 02–13–13
Front Lower Arm (Front) Bushing (Inner Side) Installation Note 02–13–14
Clip Installation Note 02–13–14
FRONT LOWER ARM (FRONT) INSPECTION 02–13–15
FRONT LOWER ARM (REAR) REMOVAL/INSTALLATION 02–13–15
Crossmember Bracket Removal Note 02–13–16
Front Lower Arm (Rear) Removal Note 02–13–16
Front Lower Arm (Rear) Bushing Removal Note 02–13–16
Front Lower Arm (Rear) Bushing Installation Note 02–13–17
Clip Installation Note 02–13–17
Front Lower Arm (Rear) Installation Note 02–13–17
FRONT LOWER ARM (REAR) INSPECTION 02–13–18
FRONT STABILIZER REMOVAL/INSTALLATION 02–13–18
Stabilizer Bracket Installation Note 02–13–18
STABILIZER CONTROL LINK INSPECTION 02–13–19
FRONT CROSSMEMBER REMOVAL/INSTALLATION 02–13–20
Crossmember Bracket Removal Note 02–13–21
Front Crossmember Bushing Removal Note 02–13–21
Front Crossmember Bushing Installation Note 02–13–22
TRANSVERSE MEMBER REMOVAL/INSTALLATION 02–13–23

FRONT SUSPENSION LOCATION INDEX

E6U021300000W01

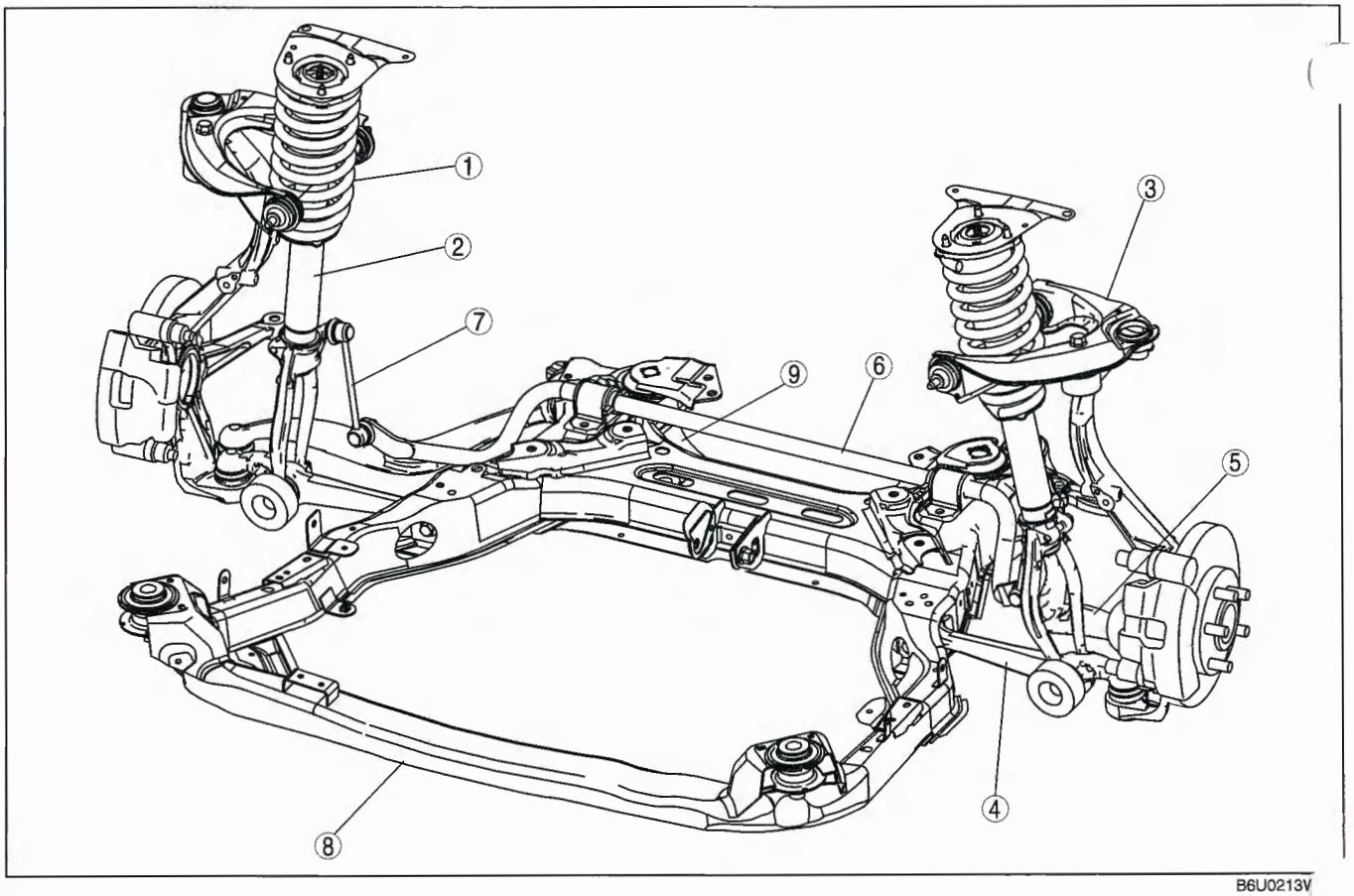

B6U0213V

1	Front shock absorber and coil spring (See 02–13–3 FRONT SHOCK ABSORBER AND SPRING REMOVAL/INSTALLATION)
2	Front shock absorber (See 02–13–7 FRONT SHOCK ABSORBER INSPECTION) (See02–13–7 FRONT SHOCK ABSORBER DISPOSAL)
3	Front upper arm (See 02–13–8 FRONT UPPER ARM REMOVAL/ INSTALLATION) (See 02–13–9 FRONT UPPER ARM INSPECTION)
4	Front lower arm (front) (See 02–13–10 FRONT LOWER ARM (FRONT) REMOVAL/INSTALLATION) (See 02–13–15 FRONT LOWER ARM (FRONT) INSPECTION)
5	Front lower arm (rear) (See 02–13–15 FRONT LOWER ARM (REAR) REMOVAL/INSTALLATION) (See 02–13–18 FRONT LOWER ARM (REAR) INSPECTION)
6	Front stabilizer (See 02–13–18 FRONT STABILIZER REMOVAL/ INSTALLATION)
7	Stabilizer control link (See 02–13–19 STABILIZER CONTROL LINK INSPECTION)
8	Front crossmember (See 02–13–20 FRONT CROSSMEMBER REMOVAL/INSTALLATION)
9	Transverse member (See 02–13–23 TRANSVERSE MEMBER REMOVAL/INSTALLATION)

FRONT SHOCK ABSORBER AND SPRING REMOVAL/INSTALLATION

E6U021304910W01

Caution

- **Performing the following procedures without first removing the ABS wheel-speed sensor may possibly cause an open circuit in the harness if it is pulled by mistake. Before performing the following procedures, remove the ABS wheel-speed sensor (axle side) and fix it to an appropriate place where the sensor will not be pulled by mistake while servicing the vehicle.**

1. Remove in the order indicated in the table.
2. Install in the reverse order of removal.

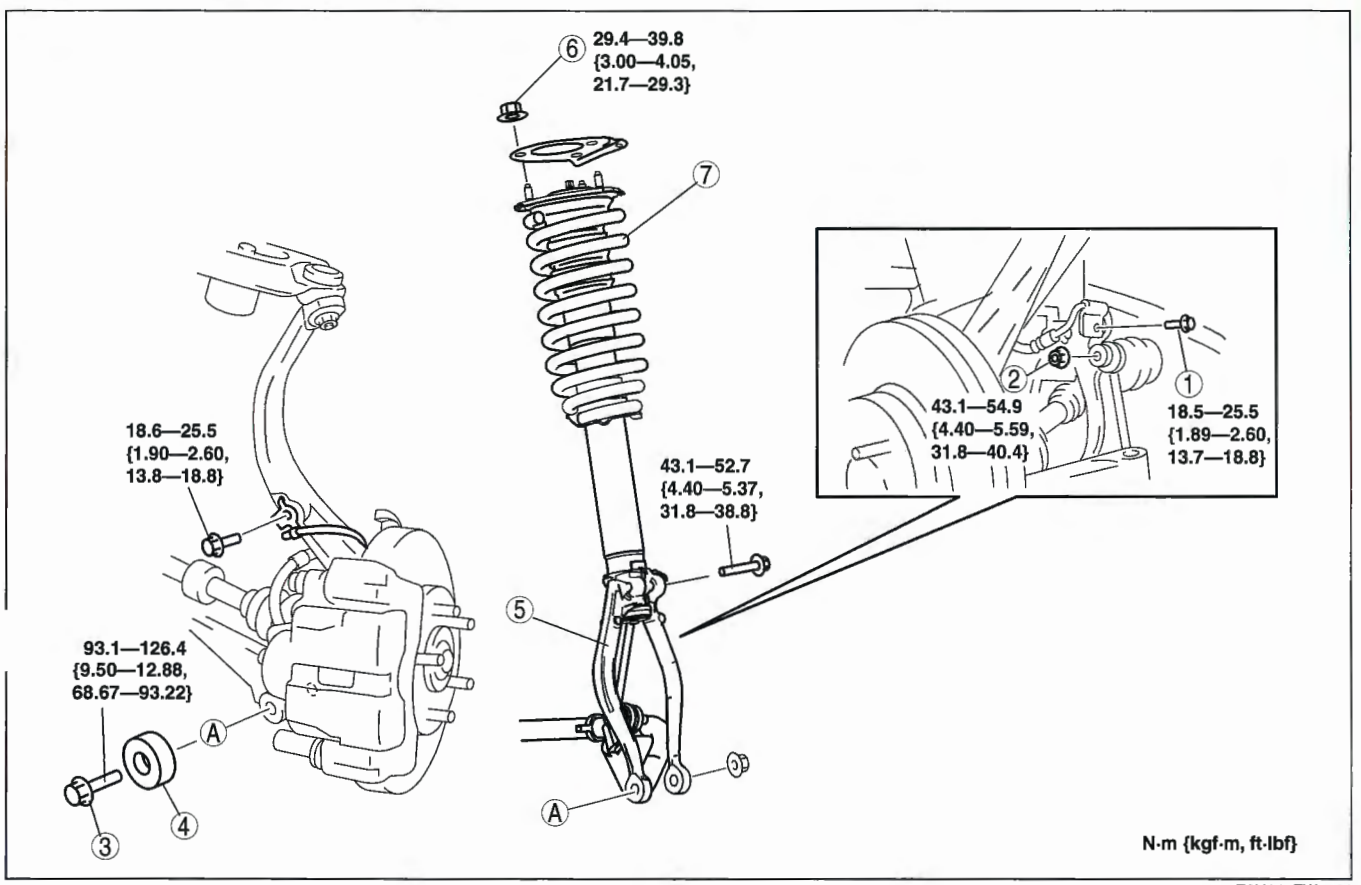

E6U213ZW5001

1	Bolt (brake hose bracket)
2	Nut (front stabilizer control link)
3	Bolt (front shock absorber lower side) (See 02–13–4 Bolt (Front Shock Absorber Lower Side) Removal Note)
4	Dynamic damper

5	Damper fork (See 02–13–4 Damper Fork Installation Note)
6	Nut (front shock absorber upper side)
7	Front shock absorber and coil spring (See 02–13–4 Front Shock Absorber and Coil Spring Installation Note)

Bolt (Front Shock Absorber Lower Side) Removal Note

1. Support the knuckle with a jack to prevent it from falling.

Damper Fork Installation Note

1. Align the gap of the damper fork with the projections of the damper
2. Tighten the bolt.

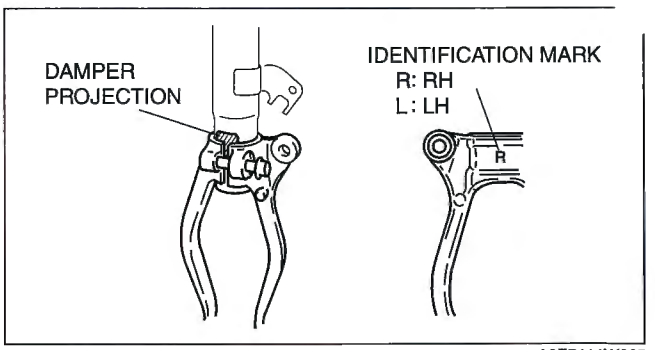

A6E7414W005

Front Shock Absorber and Coil Spring Installation Note

1. Install the stud bolts at a 27°—33° angle from where the stabilizer control link is installed (center line), towards the inner side of the vehicle.

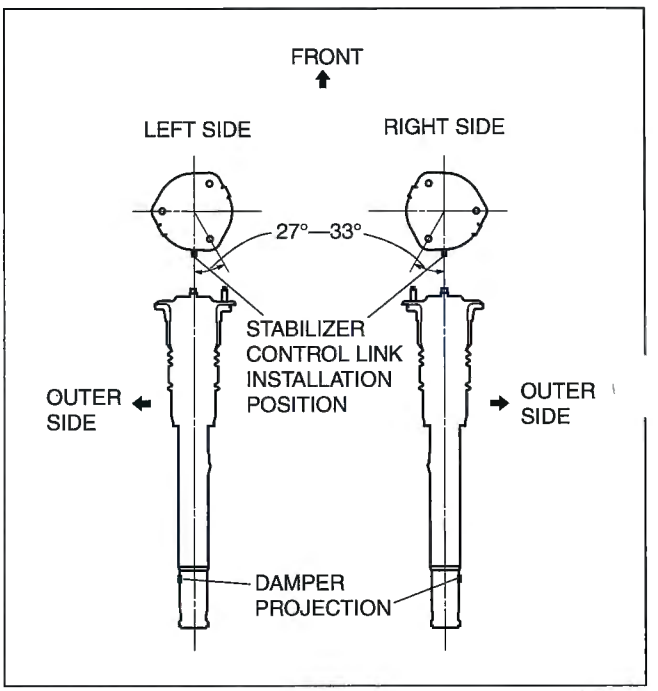

A6E7414W004

FRONT SHOCK ABSORBER AND SPRING DISASSEMBLY/ASSEMBLY

E6U021304910W02

Warning

- **Removing/installing the piston rod nut is dangerous. The shock absorber and spring could fly off under tremendous pressure and cause serious injury or death. Secure the shock absorber in the SSTs before removing the piston rod nut.**

1. Remove in the order indicated in the table.
2. Install in the reverse order of removal.

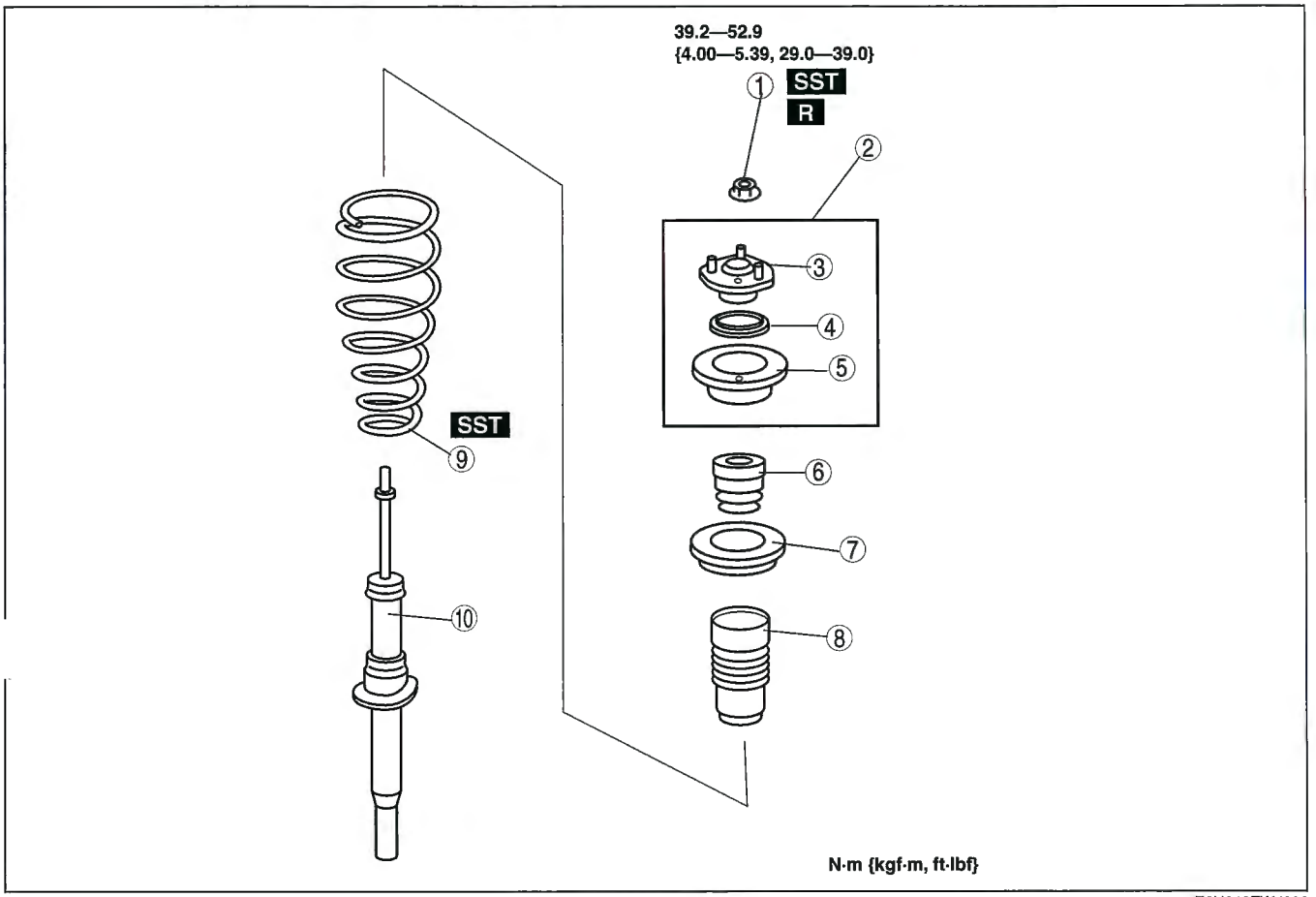

E6U213ZW5002

1	Piston rod nut (See 02–13–6 Piston Rod Nut Removal Note)
2	Mounting rubber assy
3	Mounting rubber
4	Bearing
5	Spring seat

6	Bound stopper
7	Spring seat rubber
8	Dust boot
9	Coil spring (See 02–13–6 Coil Spring Installation Note)
10	Front shock absorber

Piston Rod Nut Removal Note

Warning

- **Removing the piston rod nut is dangerous. The shock absorber and spring could fly off under tremendous pressure and cause serious injury or death. Secure the shock absorber in the SSTs before removing the piston rod nut.**

1. Protect the coil spring using a piece of cloth, then set the **SSTs**.
2. Compress the coil spring using the **SSTs**, and remove the piston rod nut.

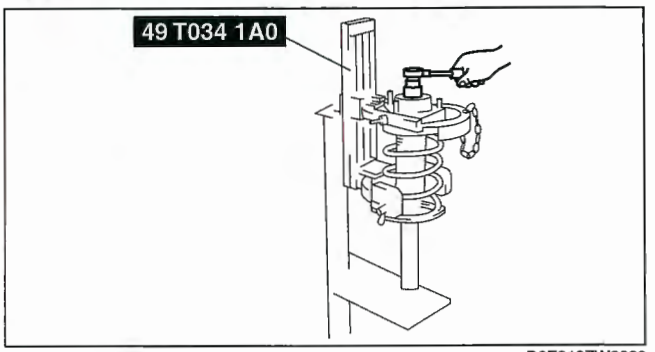

D6E213ZW3020

Coil Spring Installation Note

1. Temporarily install the coil spring, dust boot and mounting rubber on the shock absorber so that the lower end of the coil spring is seated on the step of the lower spring seat.
2. Mark the coil spring, dust boot and mounting rubber for proper installation as shown in the figure.
3. Align the marks of the coil spring and dust boot. Protect the coil spring and dust boot using a piece of cloth, then set the **SSTs**.

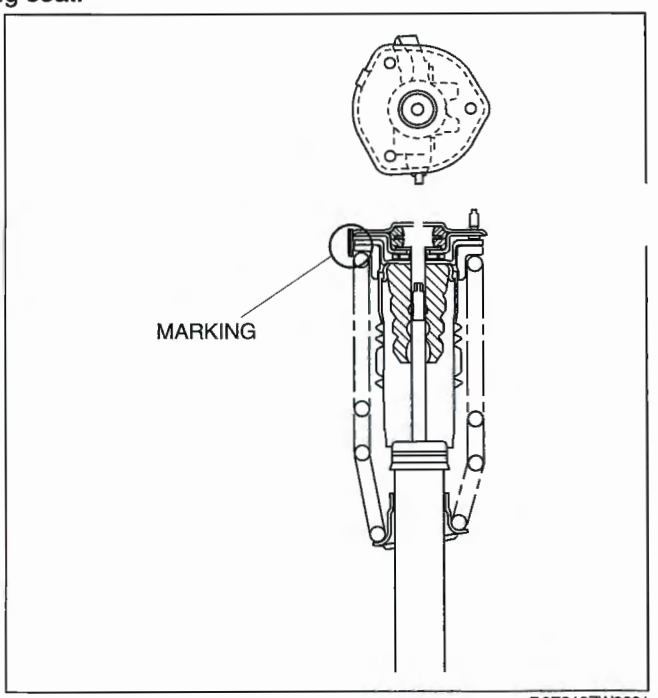

D6E213ZW3201

4. Compress the coil spring using the **SSTs**.
5. Install the shock absorber so that the lower end of the coil spring is seated on the step of the lower spring seat.
   Make sure that the marks on the shock absorber and dust boot are aligned.
7. Install the mounting rubber and piston rod nut, then remove the **SSTs**.

Piston rod nut tightening torque
39.2—52.9 N·m {4.00—5.39 kgf·m, 29.0—39.0 ft·lbf}

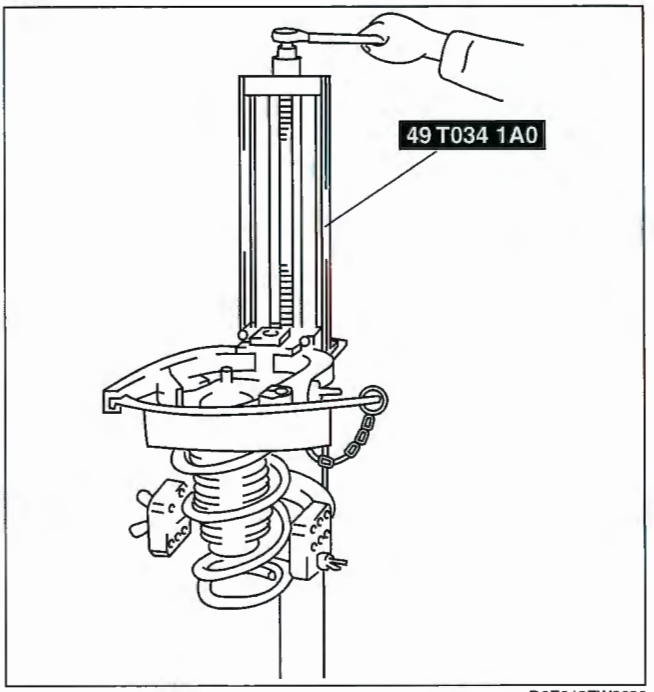

D6E213ZW3020

FRONT SHOCK ABSORBER INSPECTION

E6U021334700W01

1. Remove the front shock absorber. (See 02–13–3 FRONT SHOCK ABSORBER AND SPRING REMOVAL/INSTALLATION.) (See 02–13–5 FRONT SHOCK ABSORBER AND SPRING DISASSEMBLY/ASSEMBLY.)
2. Inspect for damage and oil leakage.
3. Inspect the rubber bushing for deterioration and wear.
4. Compress and extend the shock piston at least three times. Verify that the operational force does not change and that there is no unusual noise.
   - If not as specified, replace the shock absorber.
   (1) Compress the shock absorber piston and release it.
   (2) Verify that the piston extends fully at a normal speed.

FRONT SHOCK ABSORBER DISPOSAL

E6U021334700W02

Warning
- **Whenever drilling into a shock absorber, wear protective eye wear. The gas in the shock absorber is pressurized, and could spray metal chips into the eyes and face when drilling.**

1. Clamp a shock absorber on a flat surface or with the piston pointing downwards.
2. Drill a **2—3 mm {0.08—0.12 in}** hole at a point **20—30 mm {0.8—1.2 in}** from the bottom of the tube, so that the gas can escape.
3. Turn the hole downwards.
4. The oil can be collected by moving the piston rod several times up and down and cutting the tube at the end.
5. Dispose of waste oil according to the waste disposal law.

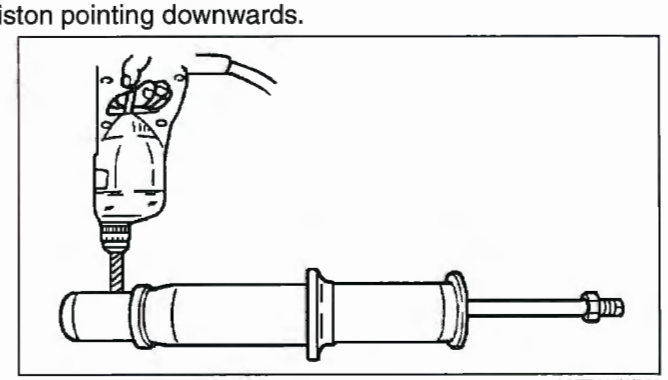
A6E7414W022

Note
- Shock absorber gas is nitrogen gas.
- Shock absorber oil is mineral oil.

FRONT UPPER ARM REMOVAL/INSTALLATION

E6U021334200W01

Caution

- **Performing the following procedures without first removing the ABS wheel-speed sensor may possibly cause an open circuit in the harness if it is pulled by mistake. Before performing the following procedures, remove the ABS wheel-speed sensor (axle side) and fix it to an appropriate place where the sensor will not be pulled by mistake while servicing the vehicle.**

1. Remove in the order indicated in the table.
2. Install in the reverse order of removal.
3. Inspect the front wheel alignment. (See 02–11–2 FRONT WHEEL ALIGNMENT.)

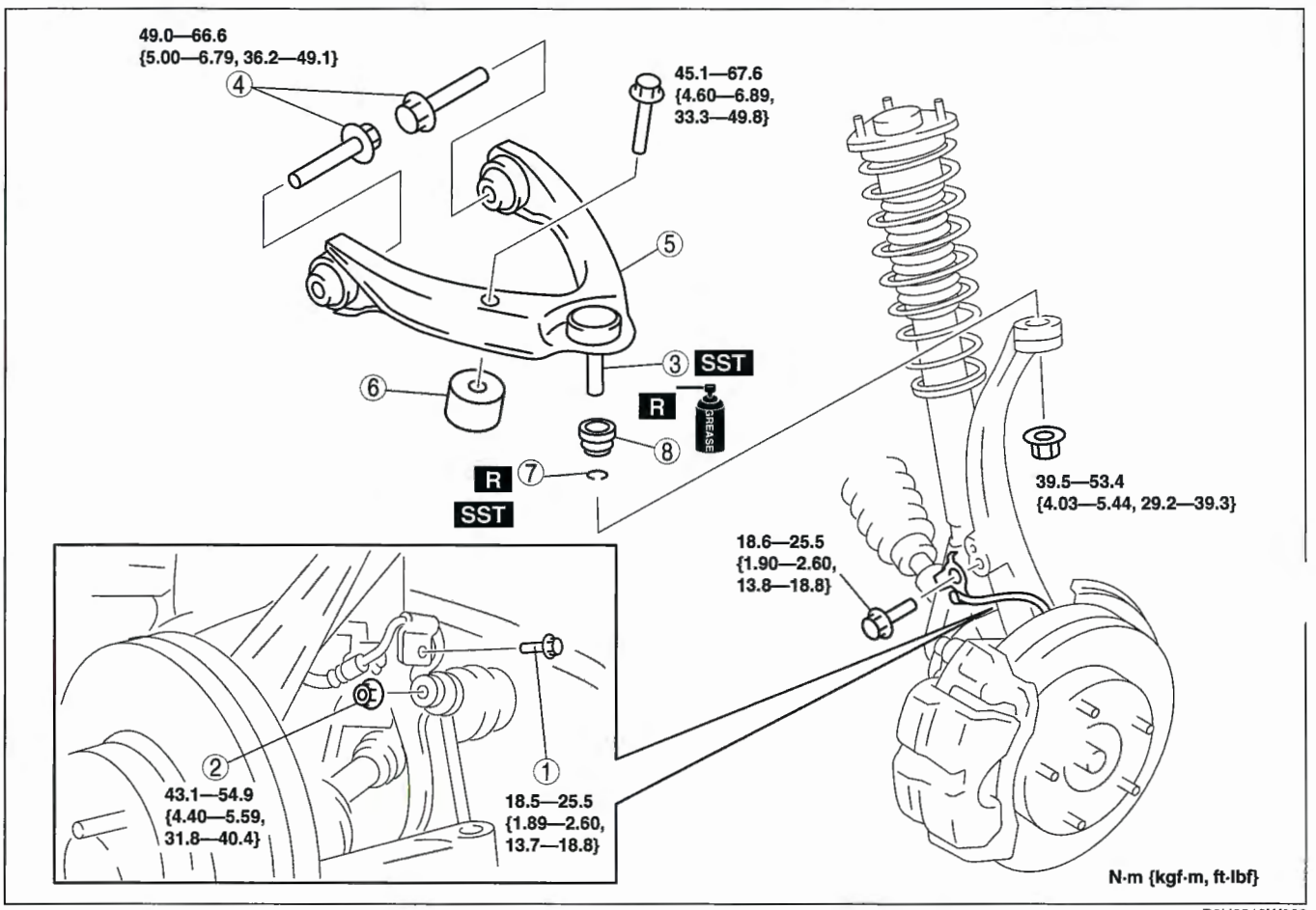

B6U0213W002

1	Bolt (brake hose bracket)
2	Nut (stabilizer control link)
3	Front upper arm ball joint (See 02–13–9 Front Upper Arm Ball Joint Removal Note)
4	Bolt (front upper arm) (See 02–13–9 Bolt (Front Upper Arm) Removal Note)

5	Front upper arm
6	Dynamic Damper
7	Clip (See 02–13–9 Clip Installation Note)
8	Dust boot

Front Upper Arm Ball Joint Removal Note

1. Support the knuckle using the jack.
2. Separate the ball joint from the knuckle using the **SST**.

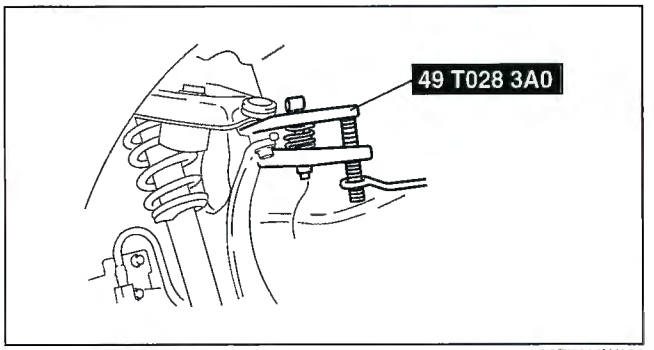

A6E7414W006

Bolt (Front Upper Arm) Removal Note

1. Remove the nuts (3 locations) from the upper part of the front shock absorber.
2. Pull the front shock absorber and coil spring out of the way, towards the outer side of the vehicle.
3. Remove the bolts.

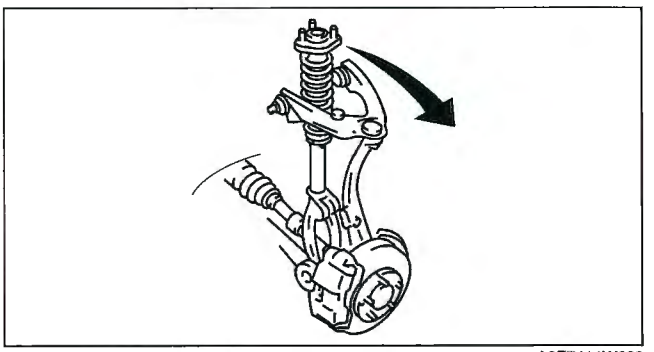

A6E7414W023

Clip Installation Note

1. Wipe the grease off the ball stud.
   Fill the inside of the new dust boot with grease.
3. Install the boot on the ball joint.
4. Install the new clip using the **SST**.
5. Verify that the clip is installed securely to the groove.
6. Wipe away the excess grease.

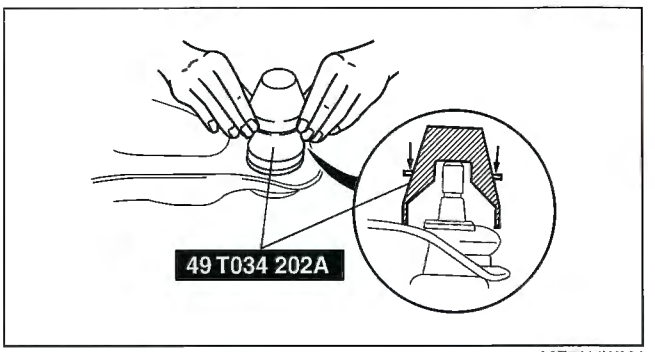

A6E7414W024

FRONT UPPER ARM INSPECTION

E6U021334200W02

1. Remove the upper arm from the vehicle. (See 02–13–8 FRONT UPPER ARM REMOVAL/INSTALLATION.)
2. Inspect for damage, cracks, and bending.
3. Inspect the ball joint rotational torque.
   (1) Rotate the ball joint five times.
   (2) Measure the rotational torque using a suitable allen socket and a torque wrench.
   - If not within the specification, replace the lower arm component.

Front upper arm ball joint rotation torque
1.5 N·m {15.0 kgf·cm, 13.2 in·lbf} max.

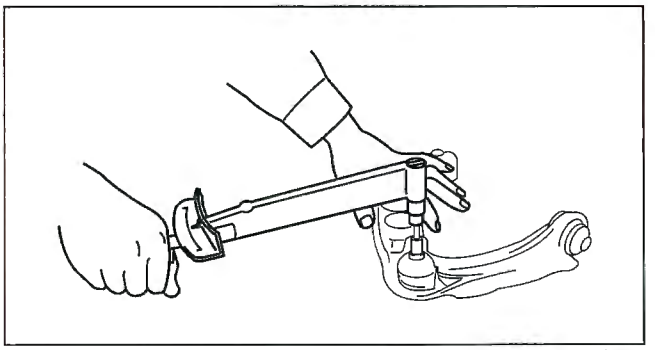

A6E7414W043

FRONT LOWER ARM (FRONT) REMOVAL/INSTALLATION

E6U021334300W05

1. Remove the TWC (AJ) (only when removing/installing the right side front lower arm (front)). (See 01–15C–2 EXHAUST SYSTEM REMOVAL/INSTALLATION [AJ].)
2. Remove in the order indicated in the table.
3. Install in the reverse order of removal.

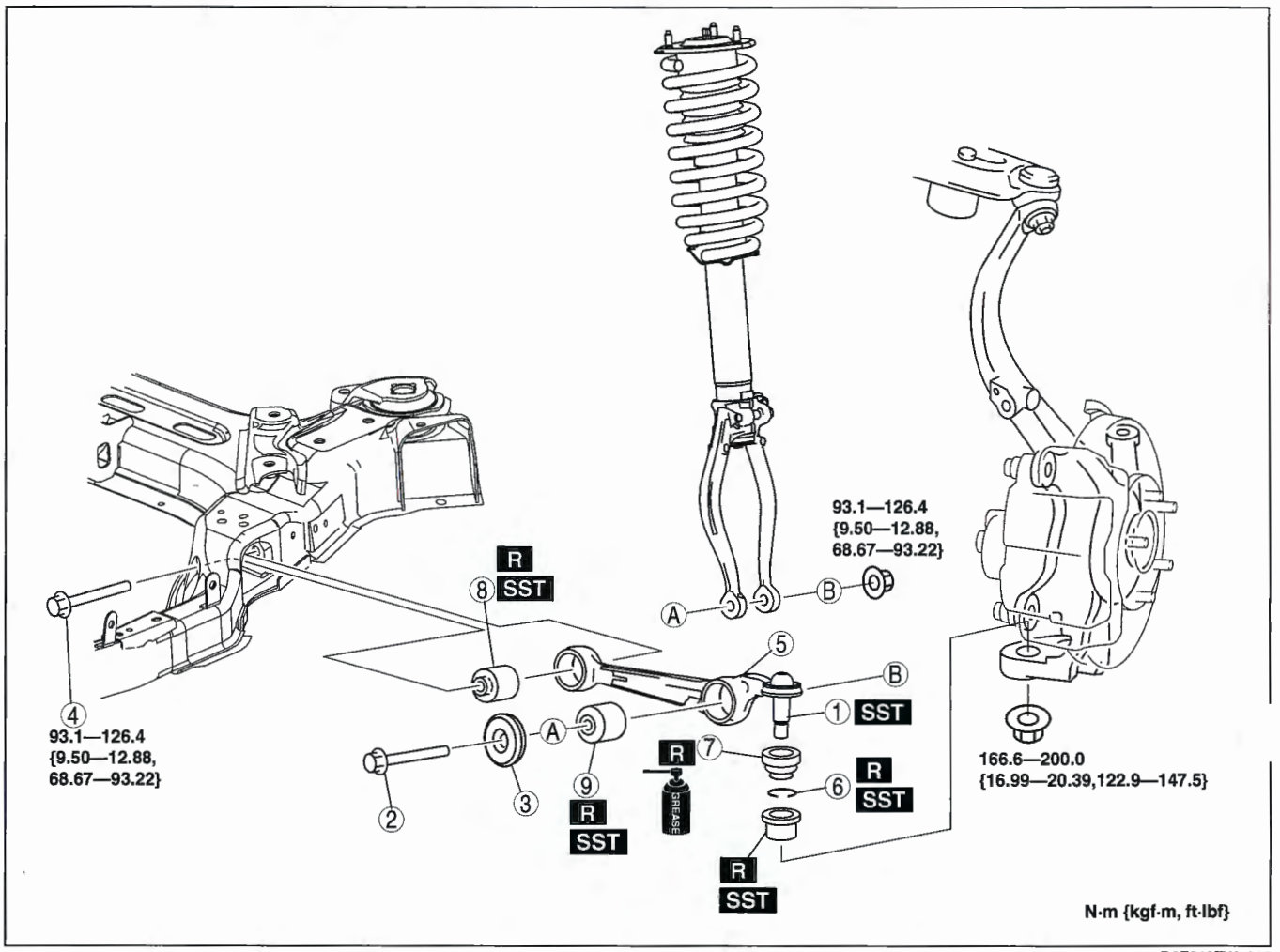

D6E213ZW7003

1	Front lower arm (front) ball joint (See 02–13–11 Front Lower Arm (Front) Ball Joint Removal Note.)
2	Bolt (front shock absorber lower side)
3	Dynamic damper
4	Bolt (front lower arm inner side)
5	Front lower arm (front) component
6	Clip (See 02–13–14 Clip Installation Note.)
7	Dust boot

8	Front lower arm (front) bushing (inner side) (See 02–13–12 Front Lower Arm (Front) Bushing (Inner Side) Removal Note.) (See 02–13–14 Front Lower Arm (Front) Bushing (Inner Side) Installation Note.)
9	Front lower arm (front) bushing (outer side) (See 02–13–13 Front Lower Arm (Front) Bushing (Outer Side) Removal Note.) (See 02–13–13 Front Lower Arm (Front) Bushing (Outer Side) Installation Note.)

Front Lower Arm (Front) Ball Joint Removal Note

Caution
- **Do not tap the steering knuckle with a hammer. The steering knuckle may be damaged.**
- **If the steering knuckle is tapped with a hammer, the steering knuckle must be replaced with a new one.**
- **If the steering knuckle bushing is raised during the ball joint disconnecting operation, remove the knuckle bushing and replace it with a new one.**

1. Insert a washer between the **SST** and the nut to prevent damage to the locknut.
2. Disconnect the ball joint using the **SST**.

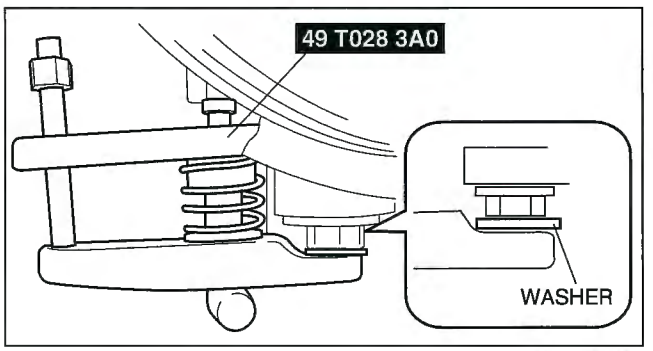

D6E213ZW3001

3. If the ball joint cannot be disconnected in Step 2, tap the **SST** from the bottom using a copper hammer.

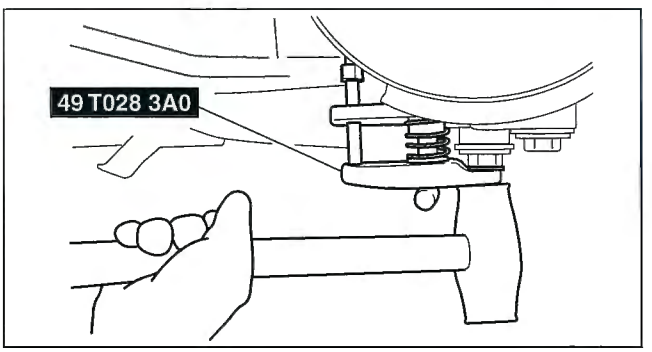

D6E213ZW3002

If steering knuckle bushing is raised during ball joint disconnecting operation

1. With the steering knuckle bushing installed to the ball joint, remove the front lower arm (front) from the steering knuckle.

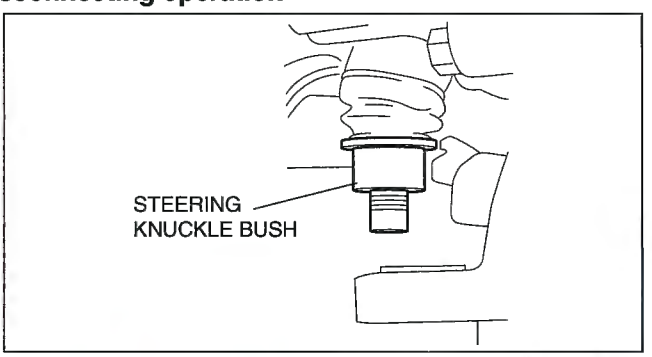

D6E213ZW3003

2. Install the nut to the front lower arm (front) ball joint and remove the steering knuckle bushing using the **SST**. At this time, insert a washer between the **SST** and the locknut to prevent damage to the locknut.

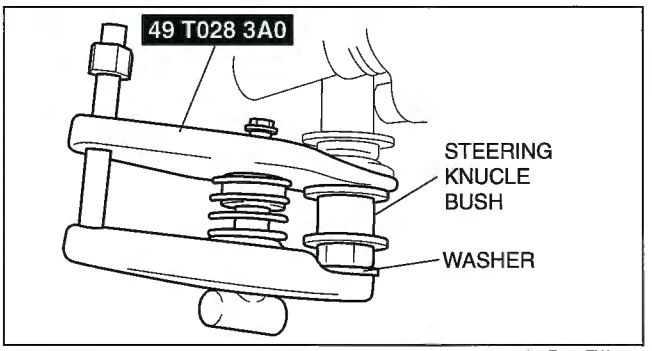

D6E213ZW3004

3. If the steering knuckle bushing cannot be removed in Step 2, tap the steering knuckle bushing with a hammer and remove the steering knuckle bushing.

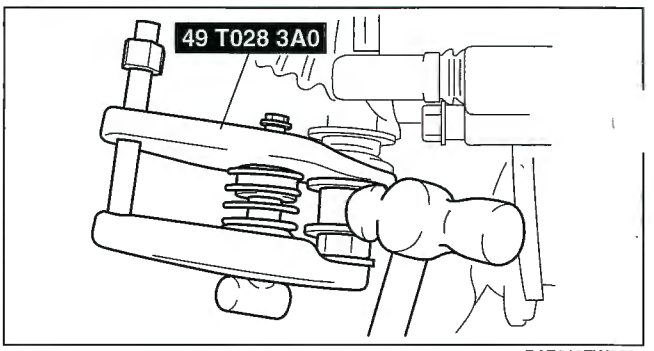

D6E213ZW3005

Caution
- **If you tap the steering knuckle bushing with a hammer to remove it, replace the steering knuckle bushing with a new one to avoid excessive play.**

Steering Knuckle Bushing Installation Note

1. Install the steering knuckle bushing to the steering knuckle using a multi-purpose bolt and nut, and washers.

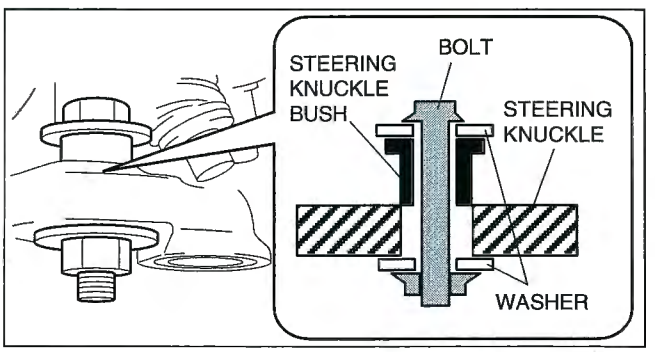

D6E213ZW3006

Caution
- **Press-in the steering knuckle bushing vertically to the steering knuckle.**
- **When pressing the steering knuckle bushing in the steering knuckle, be careful not to damage the steering knuckle bushing upper surface where it contacts the dust boot.**

Note
- Bolt diameter: 16 mm {0.63 in}
- Bolt stem length: 65 mm {2.56 in} or more
- Washer outer diameter: Approx. 45 mm {1.77 in}
- Washer thickness: Approx. 3 mm {0.12 in}

2. Tighten the bolt and nut to press-in the steering knuckle bushing to the steering knuckle.

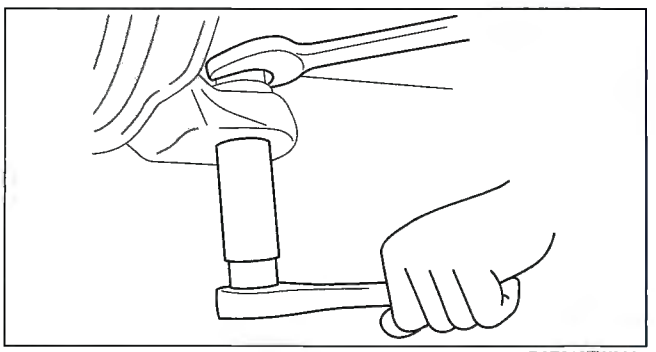
D6E213ZW3007

Front Lower Arm (Front) Bushing (Inner Side) Removal Note

1. Press the bushing (inner side) out using the **SSTs**.

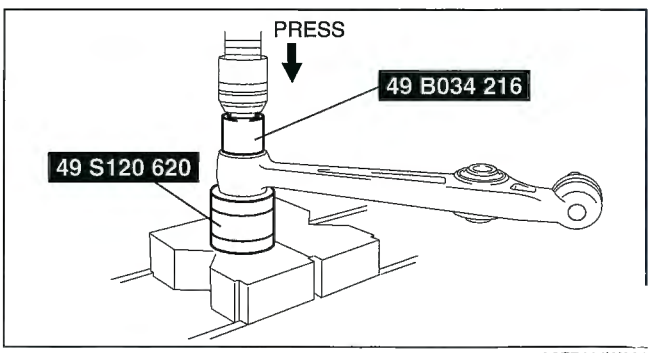

A6E7414W001

Front Lower Arm (Front) Bushing (Outer Side) Removal Note

1. Press the bushing (outer side) out using the **SSTs**.

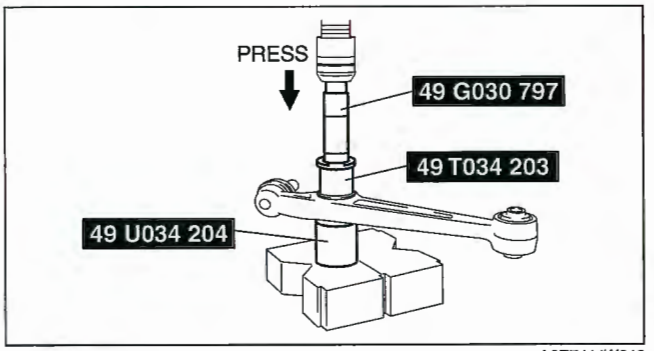

A6E7414W010

Front Lower Arm (Front) Bushing (Outer Side) Installation Note

1. Mark the new bushing as shown in the figure.

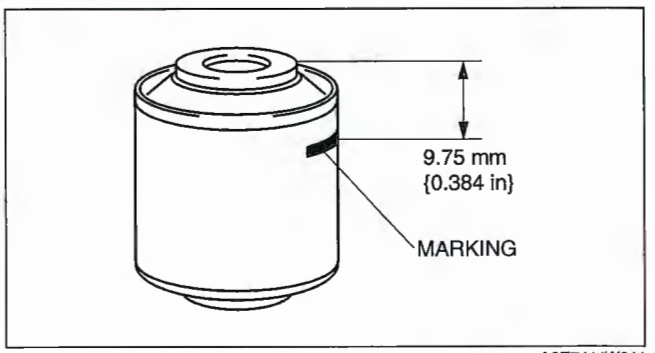

A6E7414W011

2. Press the bushing in to the marking using the **SSTs**.

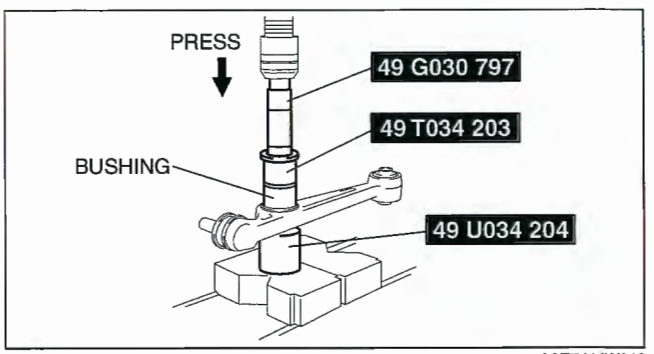

A6E7414W012

3. Verify that clearance distance A—B is **8.75 mm—10.75 mm {0.3445 in—0.4232 in}**.

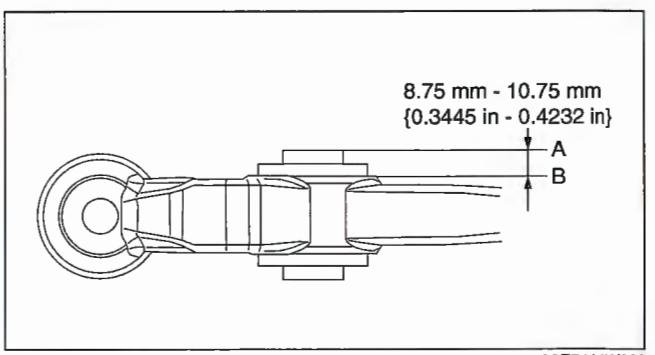

A6E7414W003

Front Lower Arm (Front) Bushing (Inner Side) Installation Note

1. Mark the new bushing as shown in the figure.

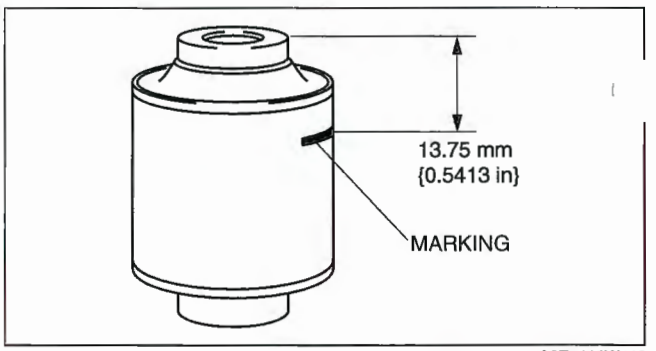

A6E7414W013

2. Press the bushing in to the marking using the **SSTs**.

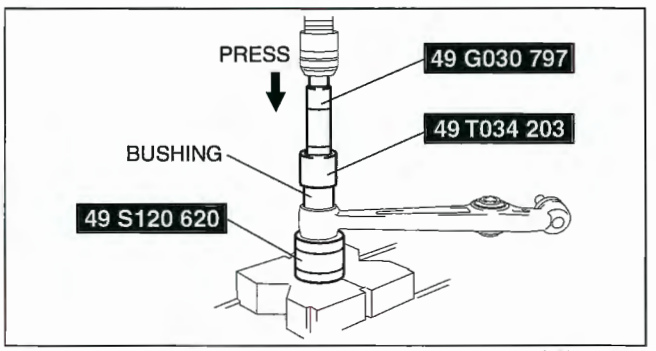

A6E7414W002

3. Verify that clearance distance A—B is **12.75 mm—14.75 mm {0.5020 in—0.5807 in}**.

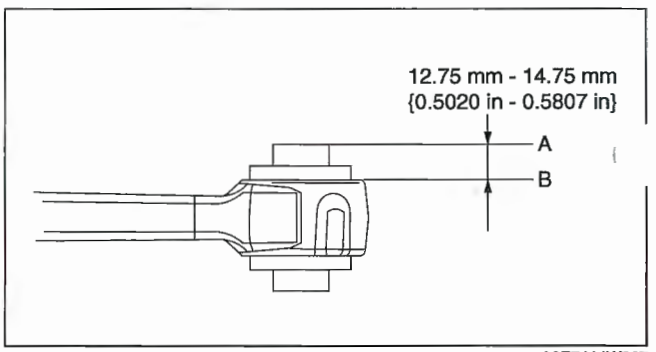

A6E7414W007

Clip Installation Note

1. Wipe the grease off the ball stud.
2. Fill the inside of the new dust boot with grease.
3. Install the boot on the ball joint.
4. Install the new clip using the **SST**.
5. Verify that the clip is installed securely to the groove.
6. Wipe away the excess grease.

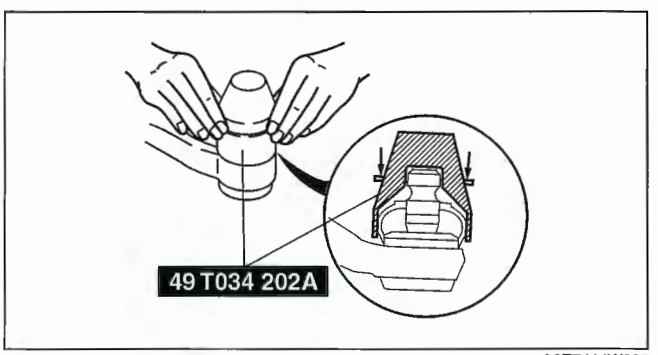

A6E7414W025

FRONT LOWER ARM (FRONT) INSPECTION

E6U021334300W02

1. Remove the lower arm (front) from the vehicle. (See 02–13–10 FRONT LOWER ARM (FRONT) REMOVAL/INSTALLATION.)
   Inspect for damage, cracks, and bending.
2. Inspect the ball joint rotational torque.
   (1) Rotate the ball joint five times.
   (2) Measure the rotational torque using a suitable allen socket and a torque wrench.
   - If not within the specification, replace the lower arm component.

Front lower arm (front) ball joint rotation torque
1.18—2.23 N·m {12.1—22.7 kgf·cm, 10.5—19.7 in·lbf}

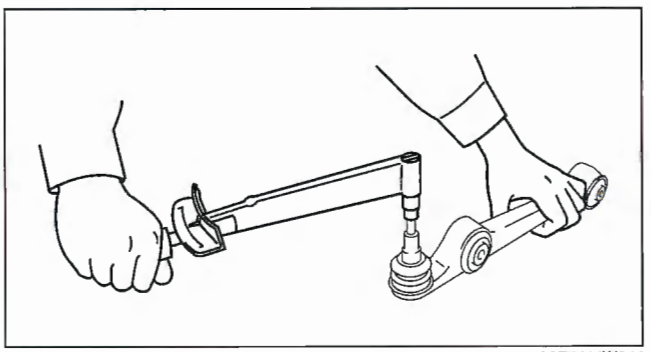

A6E7414W044

FRONT LOWER ARM (REAR) REMOVAL/INSTALLATION

E6U021334300W03

1. Remove the under cover.
2. Remove the splash shield.
3. Remove the steering gear and linkage installation bolts, and pipe component installation bolts from the front crossmember, then suspend the steering gear and linkage with a cable.

Tightening torque
- **Steering gear and linkage: 74.4—104.8 N·m {7.857—10.68 kgf·m, 54.88—77.29 ft·lbf}**
- **Pipe component: 7.8—10.8 N·m {79.6—110.0 kgf·cm, 69.1—95.5 in·lbf}**

4. Remove in the order indicated in the table.
5. Install in the reverse order of removal.
6. Inspect the front wheel alignment. (See 02–11–2 FRONT WHEEL ALIGNMENT.)

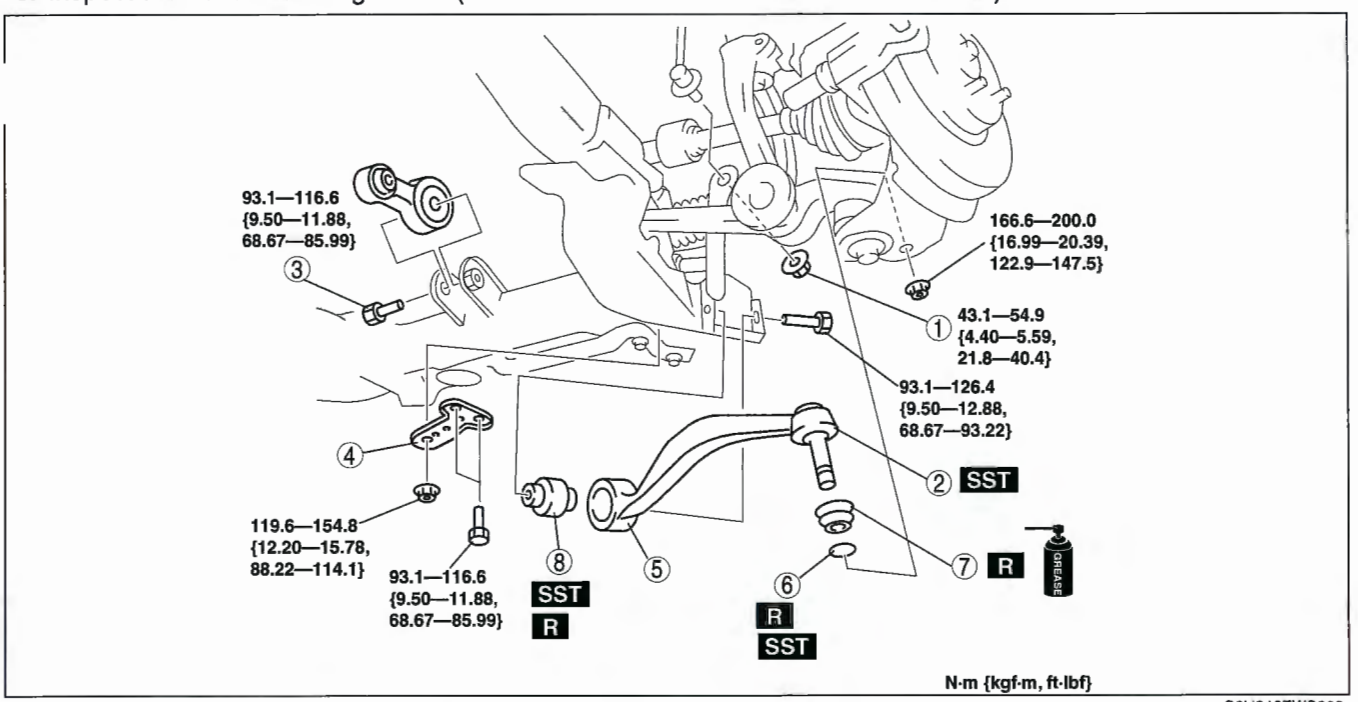

C6U213ZWC002

1	Nut (stabilizer control link lower side)
2	Front lower arm (rear) ball joint (See 02–13–11 Front Lower Arm (Front) Ball Joint Removal Note)
3	No.1 engine mount center bolt
4	Crossmember bracket (See 02–13–16 Crossmember Bracket Removal Note)
5	Front lower arm (rear) (See 02–13–16 Front Lower Arm (Rear) Removal Note)
6	Clip (See 02–13–17 Clip Installation Note)
7	Dust boot
8	Front lower arm (rear) bushing (See 02–13–16 Front Lower Arm (Rear) Bushing Removal Note) (See 02–13–17 Front Lower Arm (Rear) Bushing Installation Note)

Crossmember Bracket Removal Note

Warning

- **Removing the crossmember is dangerous. The crossmember component could fall and cause serious injury or death. Verify that the jack securely supports the crossmember component befo. removing the crossmember bracket.**

1. Support the crossmember component with a jack and remove the nuts.
2. Remove the crossmember bracket.

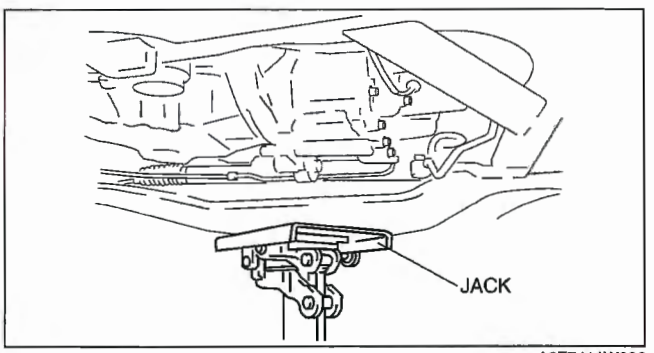

A6E7414W036

Front Lower Arm (Rear) Removal Note

1. Support the crossmember component with a jack.
2. Loosen the crossmember component installation bolts (front side). (Do not remove the bolts completely.)
3. Remove the crossmember component installation bolts (rear side).
4. Remove the front lower arm (rear).

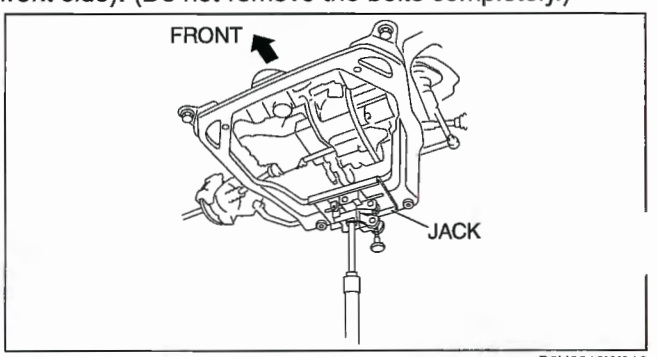

B6U0213W012

Front Lower Arm (Rear) Bushing Removal Note

1. Press the bushing out using the **SSTs**.
2. Remove the front lower arm (rear) from the press and tap the bushing out with a hammer.

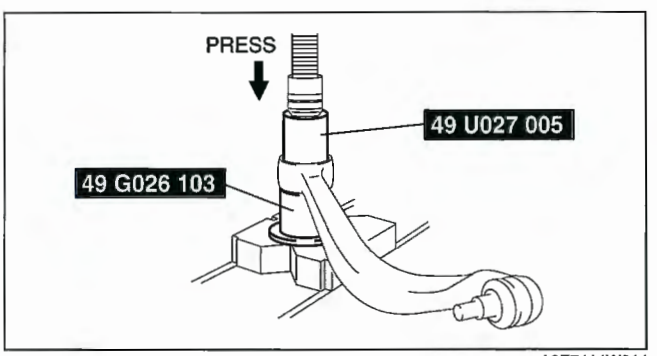

A6E7414W014

Front Lower Arm (Rear) Bushing Installation Note

1. Mark the new bushing as shown in the figure.

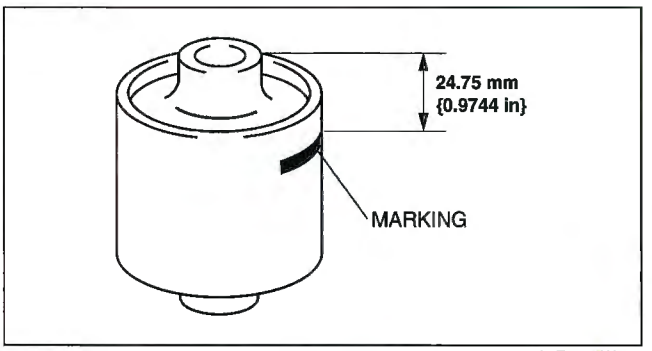

A6E7414W026

2. Press the bushing in to the marking using the **SSTs**.

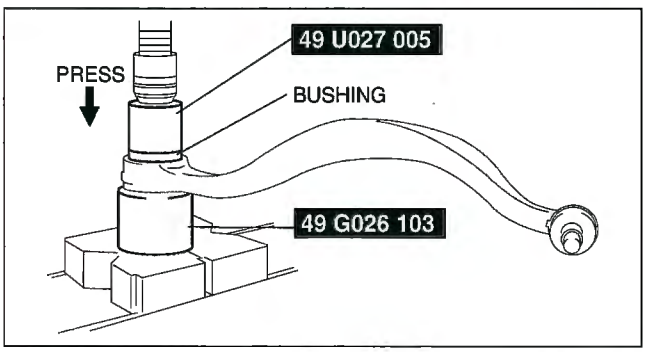

A6E7414W027

3. Verify that clearance distance A—B is **23.75—25.75 mm {0.936—1.013 in}**.

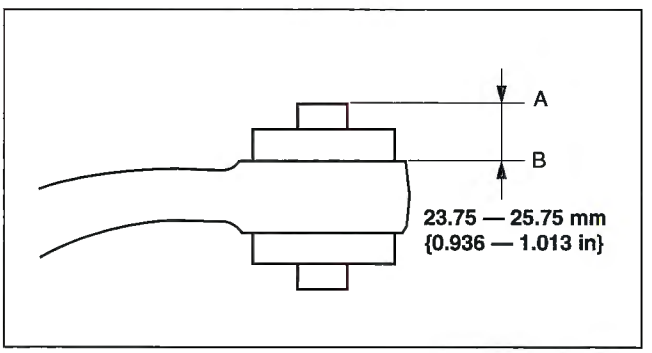

B6U0213W008

Clip Installation Note

1. Wipe the grease off the ball stud.
2. Fill the inside of the new dust boot with grease.
3. Install the boot on the ball joint.
4. Install the new clip using the **SST**.
5. Verify that the clip is installed securely to the groove.
6. Wipe away the excess grease.

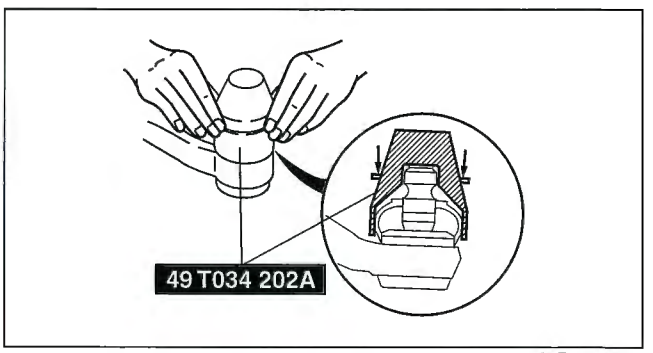

A6E7414W025

nt Lower Arm (Rear) Installation Note

1. Install the lower arm (rear) so that identification mark (L or R) faces toward the front of the vehicle.

FRONT LOWER ARM (REAR) INSPECTION

E6U021334300W04

1. Remove the lower arm (rear) from the vehicle. (See 02–13–15 FRONT LOWER ARM (REAR) REMOVAL/INSTALLATION.)
2. Inspect for damage, cracks, and bending.
3. Inspect the ball joint rotational torque.
   (1) Rotate the ball joint five times.
   (2) Measure the rotational torque using a suitable allen socket and a torque wrench.
   - If not within the specification, replace the lower arm component.

Front lower arm (rear) ball joint rotation torque
1.00—2.22 N·m {10.2—22.6 kgf·cm, 8.86—19.6 in·lbf}

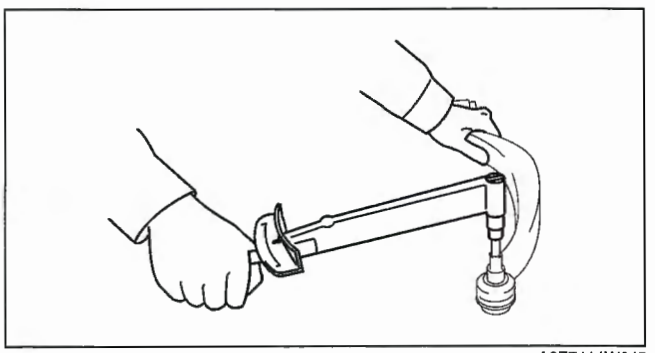

A6E7414W045

FRONT STABILIZER REMOVAL/INSTALLATION

E6U021334100W01

1. Remove the front crossmember component. (See 02–13–20 FRONT CROSSMEMBER REMOVAL/INSTALLATION.)
2. Remove in the order indicated in the table.

1	Stabilizer control link
2	Stabilizer bracket (See 02–13–18 Stabilizer Bracket Installation Note)
3	Stabilizer bushing
4	Front stabilizer

3. Install in the reverse order of removal.
4. Inspect the front wheel alignment. (See 02–11–2 FRONT WHEEL ALIGNMENT.)

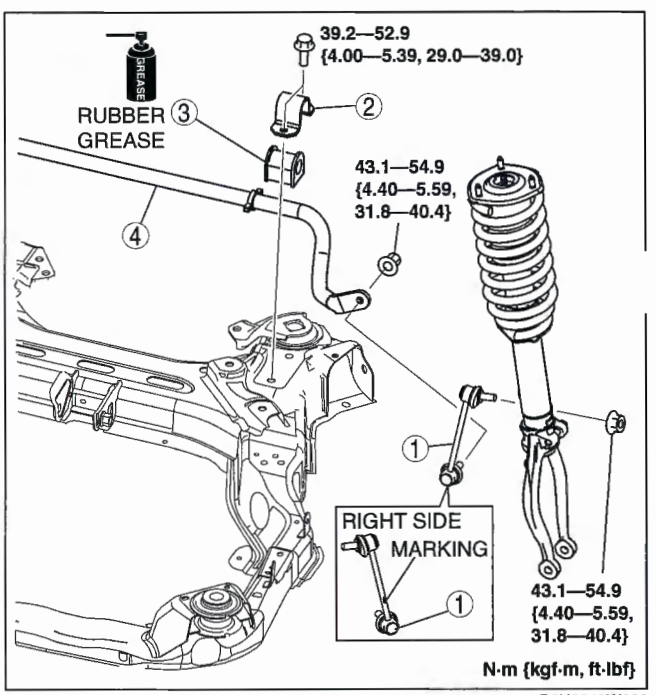

B6U0213W003

Stabilizer Bracket Installation Note

1. Apply rubber grease to the inside surface of the stabilizer bushing.
2. Align the bushing with the inside of positioning plate on the stabilizer bar.
3. Install the stabilizer bracket.

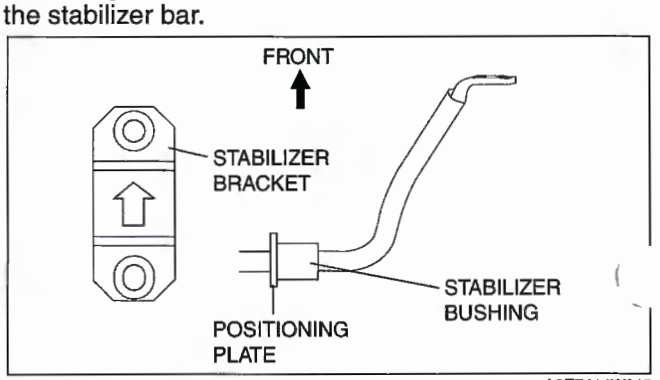

A6E7414W015

STABILIZER CONTROL LINK INSPECTION

E6U021334150W01

1. Remove the stabilizer control link from the vehicle. (See 02–13–18 FRONT STABILIZER REMOVAL/INSTALLATION.)
   Inspect for bending and damage.
2. Measure the ball joint starting torque.
   (1) Rock the ball joint stud side to side 10 times.
   (2) Rotate the ball joint stud 10 times.
   (3) Measure the starting torque using a suitable allen socket and a torque wrench.

   Front stabilzier control link ball joint starting torque
   0.2—0.8 N·m {2.1—8.1 kgf·cm, 1.8—7.0 in·lbf}

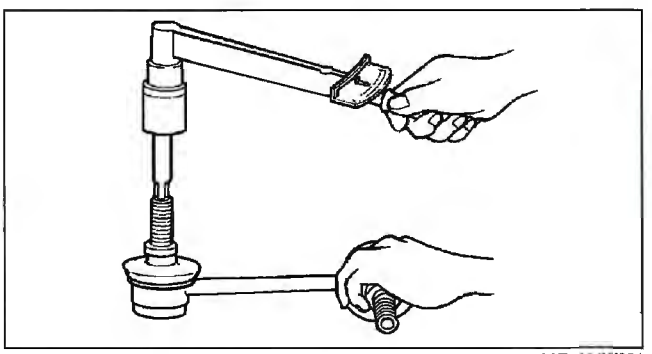

A6E7414W021

FRONT CROSSMEMBER REMOVAL/INSTALLATION

E6U021334800W01

1. Remove the under cover.
2. Remove the splash shield.
3. Remove the transverse member.
   (See 02–13–23 TRANSVERSE MEMBER REMOVAL/INSTALLATION.)
4. Remove the steering gear and linkage, and pipe component installation bolts from the front crossmember, then suspend the steering gear and linkage with a cable.

   Tightening torque
   - **Steering gear and linkage: 74.4—104.8 N·m {7.857—10.68 kgf·m, 54.88—77.29 ft·lbf}**
   - **Pipe component: 7.8—10.8 N·m {79.6—110.0 kgf·cm, 69.1—95.5 in·lbf}**

5. Remove in the order indicated in the table.
6. Install in the reverse order of removal.
7. Inspect the front wheel alignment. (See 02–11–2 FRONT WHEEL ALIGNMENT.)

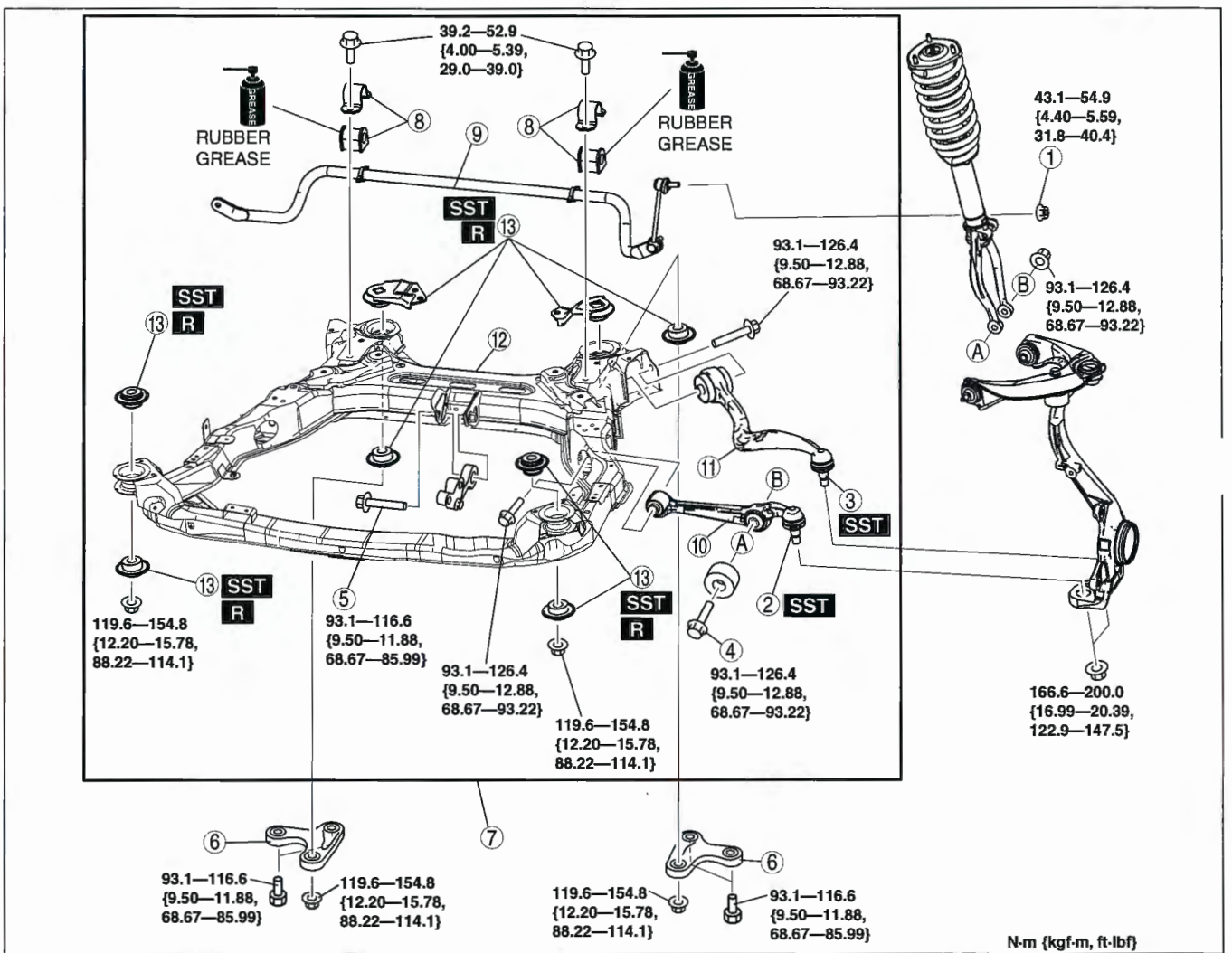

B6U0213W004

1	Nut (stabilizer control link)
2	Front lower arm (front) ball joint (See 02–13–11 Front Lower Arm (Front) Ball Joint Removal Note)
3	Front lower arm (rear) ball joint (See 02–13–15 FRONT LOWER ARM (REAR) REMOVAL/INSTALLATION)
4	Bolt (front shock absorber lower side)
5	No.1 engine mount center bolt
6	Crossmember bracket (See 02–13–21 Crossmember Bracket Removal Note)

7	Crossmember component
8	Stabilizer bracket and bushing
9	Front Stabilizer
10	Front lower arm (front)
11	Front lower arm (rear)
12	Front crossmember
13	Front crossmember bushing (See 02–13–21 Front Crossmember Bushing Removal Note) (See 02–13–22 Front Crossmember Bushing Installation Note)

Crossmember Bracket Removal Note

Warning

- **Removing the crossmember is dangerous. The crossmember component could fall and cause serious injury or death. Verify that the jack securely supports the crossmember component before removing the crossmember bracket.**

1. Support the crossmember component with a jack and remove the nuts.
2. Remove the crossmember bracket.

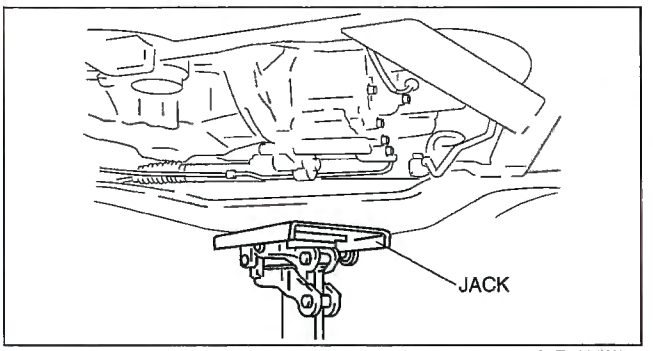

A6E7414W036

Front Crossmember Bushing Removal Note

1. Mark the crossmember as shown in the figure (rear upper side only).

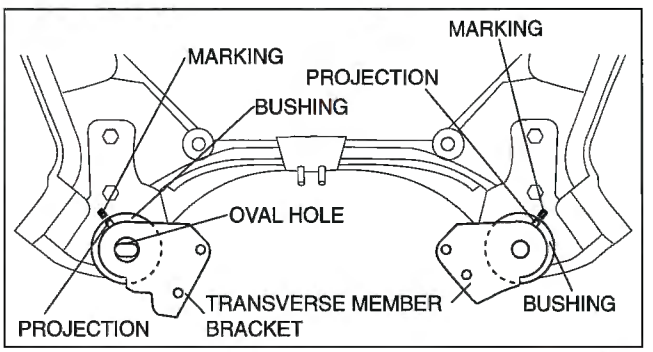

A6E7414W040

2. Remove the bushings using flathead screwdriver, being careful not to damage the front crossmember.

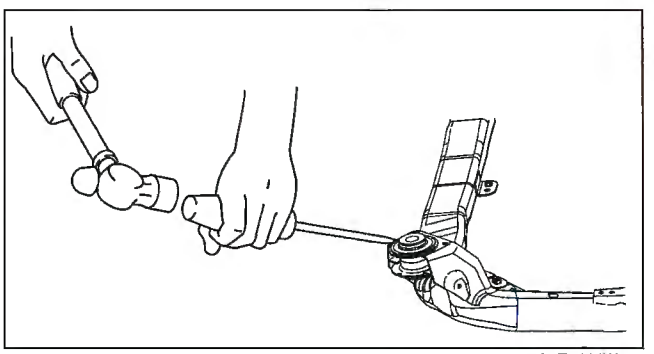

A6E7414W032

Front Crossmember Bushing Installation Note

1. Set the bushings as shown in the figure.

Note

- The bushings must be installed with correct orientation as shown below, or increased noise and vibratic may result.

Front Side

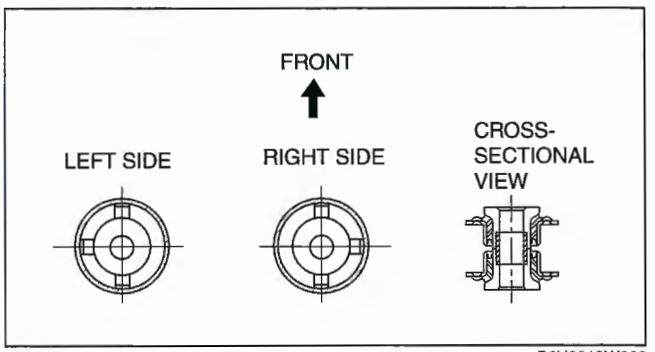

B6U0213W009

Rear Side

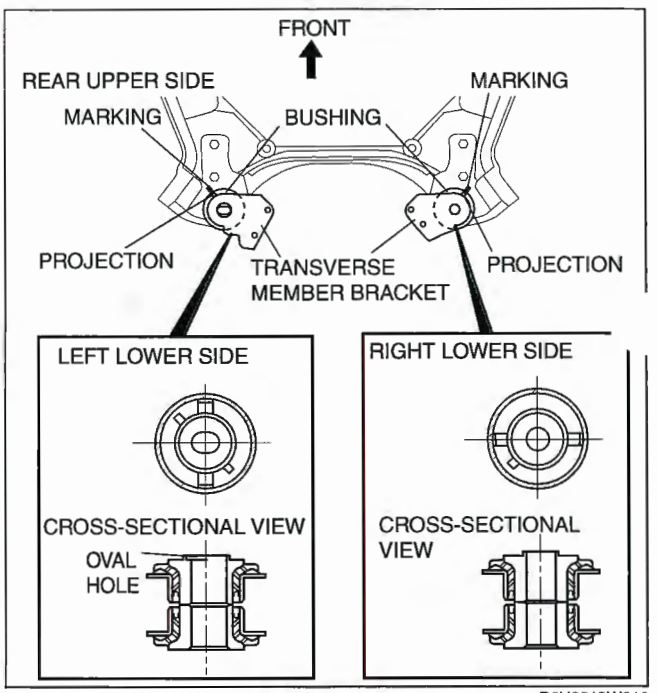

B6U0213W010

2. Install the bushing onto the crossmember using the **SSTs**.

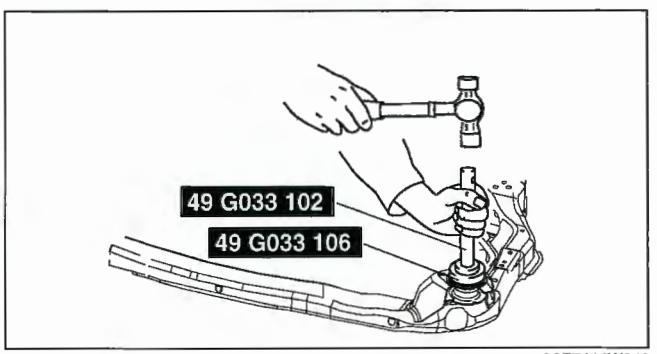

A6E7414W042

TRANSVERSE MEMBER REMOVAL/INSTALLATION

1. Remove the transverse member.
2. Install the transverse member.

E6U021334890W01

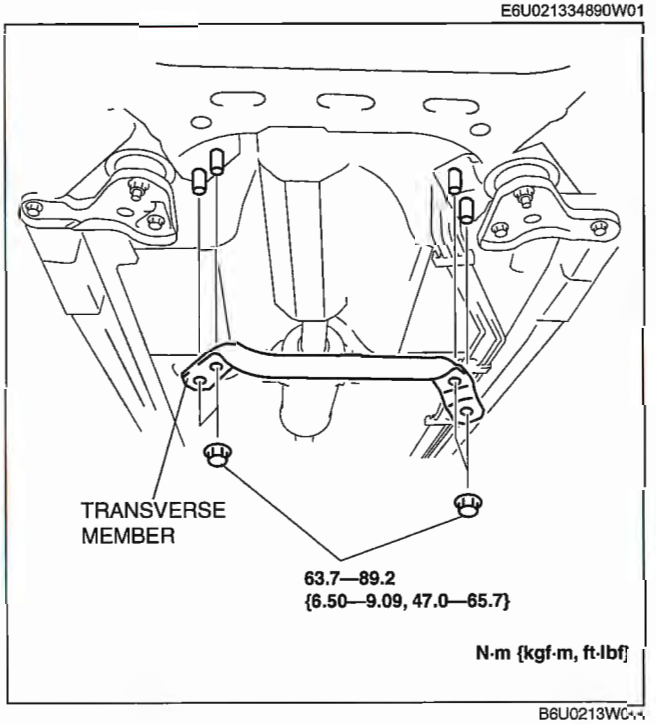

B6U0213WC

02–14 REAR SUSPENSION

REAR SUSPENSION
LOCATION INDEX 02–14–2
REAR SHOCK ABSORBER
REMOVAL/INSTALLATION 02–14–4
Bracket Installation Note 02–14–4
REAR SHOCK ABSORBER
INSPECTION 02–14–4
REAR SHOCK ABSORBER
DISPOSAL 02–14–4
REAR COIL SPRING
REMOVAL/INSTALLATION 02–14–5
Bolt (Rear Lower Arm Outer Side)
Removal Note 02–14–5
Bound Stopper (Body Side)
Removal/Installation Note 02–14–5
Rear Coil Spring Installation Note 02–14–6
REAR LOWER ARM
REMOVAL/INSTALLATION 02–14–6
Rear Lower Arm Bushing
Removal Note 02–14–7
Rear Lower Arm Bushing
Installation Note 02–14–7
REAR UPPER ARM
REMOVAL/INSTALLATION 02–14–8
Bolt (Rear Shock Absorber Lower Side)
Removal Note 02–14–8
Bolt (Rear Upper Arm)
Removal Note 02–14–9
Rear Upper Arm Bushing
Removal Note 02–14–9
Rear Upper Arm Bushing
Installation Note 02–14–9
REAR LATERAL LINK
REMOVAL/INSTALLATION 02–14–10
REAR STABILIZER
REMOVAL/INSTALLATION 02–14–11
REAR STABILIZER
REMOVAL/INSTALLATION [AWD] 02–14–12
Bolt (Differential Front Side)
Removal Note 02–14–12
Bolt (Differential Front Side)
Installation Note 02–14–13
STABILIZER CONTROL
LINK INSPECTION 02–14–13
TRAILING LINK
REMOVAL/INSTALLATION 02–14–14
Caliper Component Removal Note 02–14–15
Bolt (Trailing Link Front Side)
Removal Note 02–14–15
Bolt (Rear Lateral Link Outer Side)
Removal Note 02–14–15
Bolt (Trailing Link Front Side)
Installation Note 02–14–15
TRAILING LINK
REMOVAL/INSTALLATION [AWD] 02–14–16
Bolt (Trailing Link Front Side)
Removal Note 02–14–17
Bolt (Lateral Link Outer Side)
Removal Note 02–14–17
Bolt (Lateral Link Outer Side)
Installation Note 02–14–17
Bolt (Trailing Link Front Side)
Installation Note 02–14–17
REAR CROSSMEMBER
REMOVAL/INSTALLATION 02–14–18
Caliper Component
Removal Note 02–14–19
Bolt (Trailing Link Front Side)
Removal Note 02–14–19
Crossmember Component
Removal Note 02–14–19
Rear Crossmember Bushing
Removal Note 02–14–20
Rear Crossmember Bushing
Installation Note 02–14–20
Bolt (Trailing Link Front Side)
Installation Note 02–14–20
REAR CROSSMEMBER
REMOVAL/INSTALLATION [AWD] 02–14–21
Crossmember component,
Differential And Drive Shaft
Removal Note 02–14–22
Rear Crossmember Bushing
Removal Note 02–14–22
Rear Crossmember Bushing
Installation Note 02–14–23

REAR SUSPENSION LOCATION INDEX

E6U021400000W01

2WD

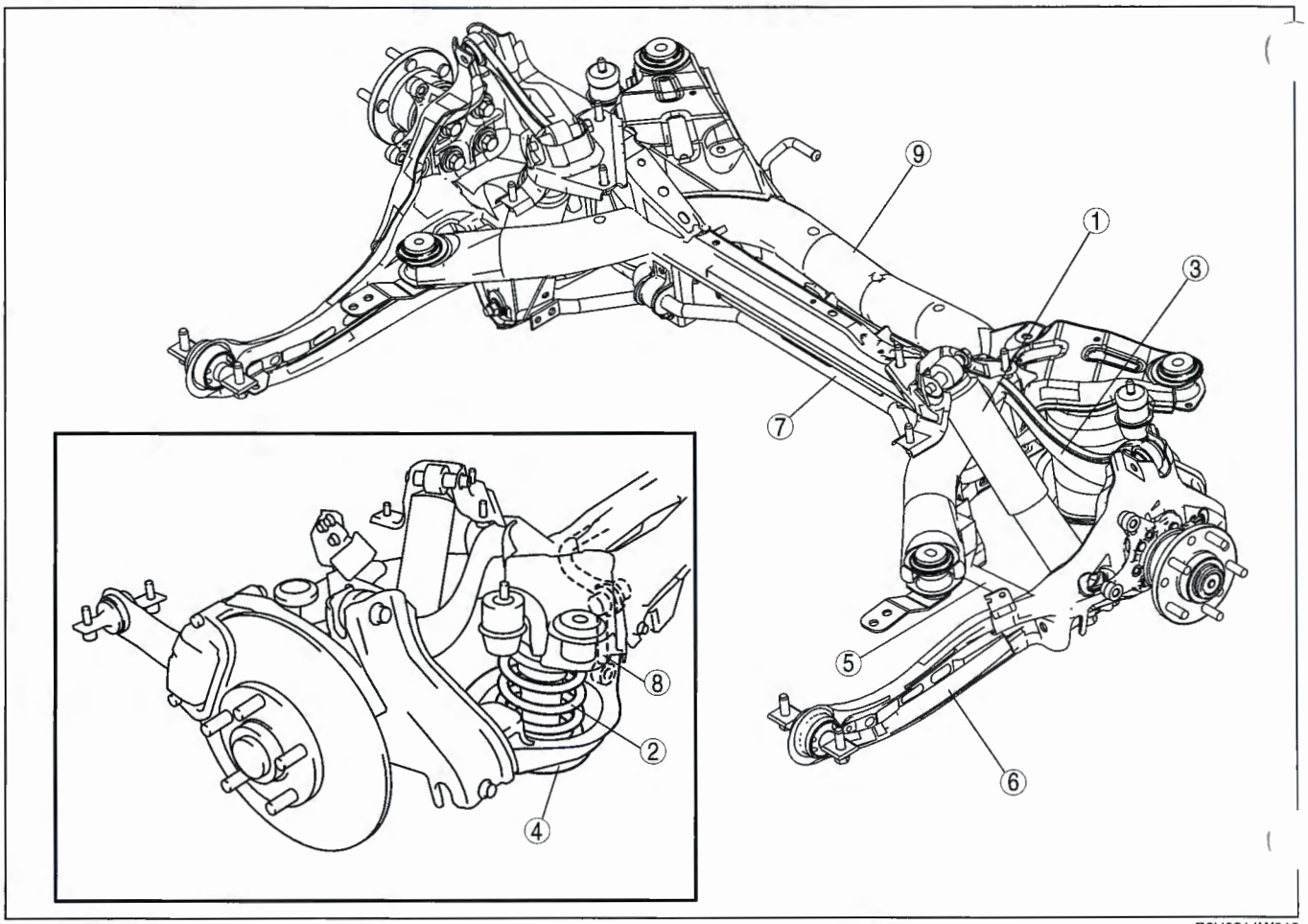

B6U0214W016

1	Rear shock absorber (See02–14–4 REAR SHOCK ABSORBER REMOVAL/INSTALLATION) (See 02–14–4 REAR SHOCK ABSORBER INSPECTION) (See 02–14–4 REAR SHOCK ABSORBER DISPOSAL)
2	Rear coil spring (See02–14–5 REAR COIL SPRING REMOVAL/ INSTALLATION)
3	Rear upper arm (See02–14–8 REAR UPPER ARM REMOVAL/ INSTALLATION)
4	Rear lower arm (See02–14–6 REAR LOWER ARM REMOVAL/ INSTALLATION)

5	Rear lateral link (See02–14–10 REAR LATERAL LINK REMOVAL/ INSTALLATION)
6	Trailing link (See02–14–14 TRAILING LINK REMOVAL/ INSTALLATION)
7	Rear stabilizer (See02–14–11 REAR STABILIZER REMOVAL/ INSTALLATION)
8	Stabilizer control link (See02–14–13 STABILIZER CONTROL LINK INSPECTION)
9	Rear crossmember (See02–14–18 REAR CROSSMEMBER REMOVAL/INSTALLATION)

AWD

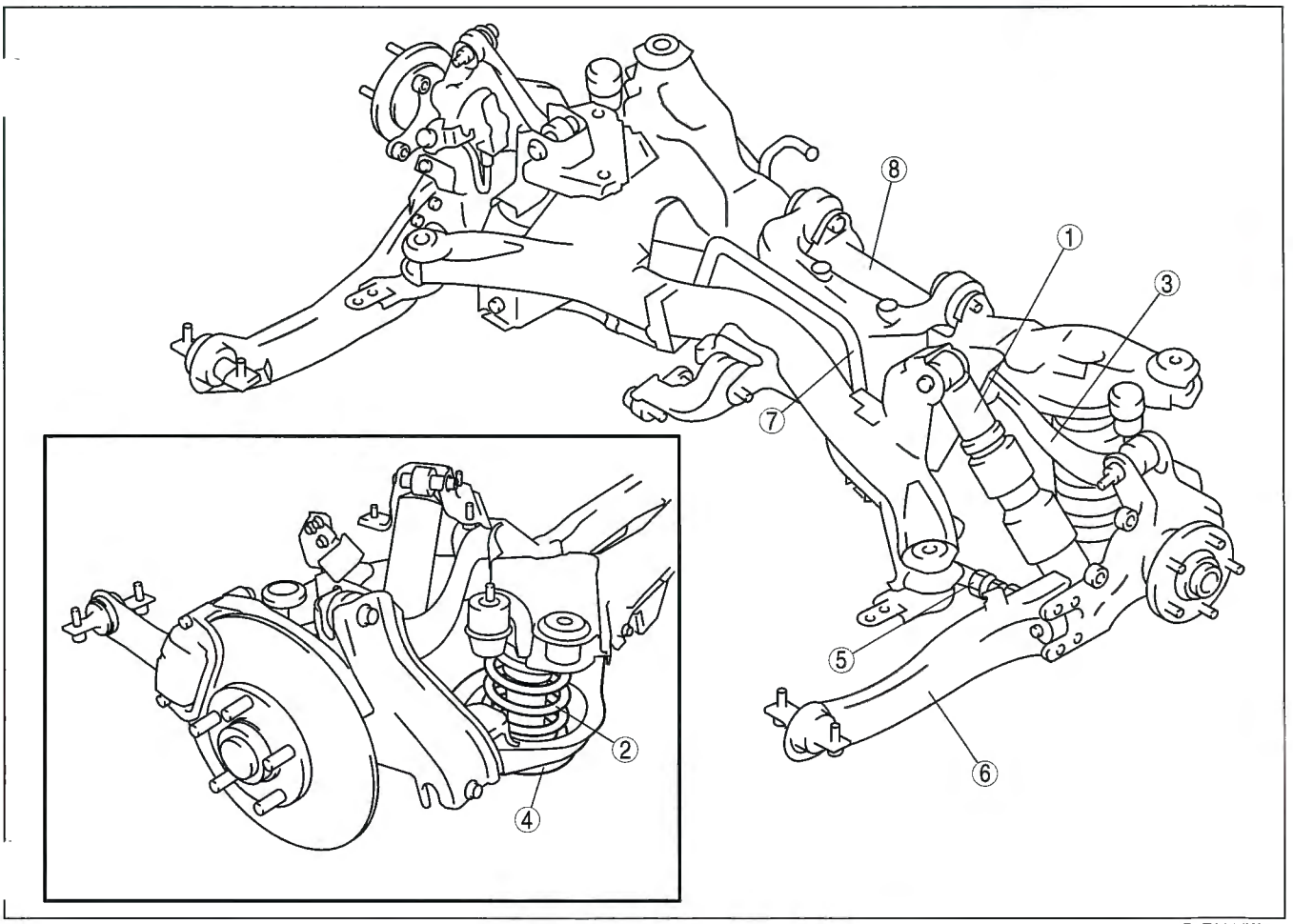

B6E0214W101

1	Rear shock absorber (See 02–14–4 REAR SHOCK ABSORBER REMOVAL/INSTALLATION.) (See 02–14–4 REAR SHOCK ABSORBER INSPECTION.) (See 02–14–4 REAR SHOCK ABSORBER DISPOSAL.)
2	Rear coil spring (See 02–14–5 REAR COIL SPRING REMOVAL/INSTALLATION.)
3	Rear upper arm (See 02–14–8 REAR UPPER ARM REMOVAL/INSTALLATION.)
4	Rear lower arm (See 02–14–6 REAR LOWER ARM REMOVAL/INSTALLATION.)

5	Rear lateral link (See 02–14–10 REAR LATERAL LINK REMOVAL/INSTALLATION.)
6	Rear trailing arm (See 02–14–16 TRAILING LINK REMOVAL/INSTALLATION [AWD].)
7	Rear stabilizer (See 02–14–12 REAR STABILIZER REMOVAL/INSTALLATION [AWD].)
8	Rear crossmember (See 02–14–21 REAR CROSSMEMBER REMOVAL/INSTALLATION [AWD].)

REAR SHOCK ABSORBER REMOVAL/INSTALLATION

E6U021428700W01

Caution

- **Performing the following procedures without first removing the ABS wheel-speed sensor may possibly cause an open circuit in the harness if it is pulled by mistake. Before performing the following procedures, remove the ABS wheel-speed sensor (axle side) and fix it to an appropriate place where the sensor will not be pulled by mistake while servicing the vehicle.**

1. Remove in the order indicated in the table.
2. Install in the reverse order of removal.

1	Rear shock absorber and bracket
2	Bracket (See 02–14–4 Bracket Installation Note)
3	Rear shock absorber

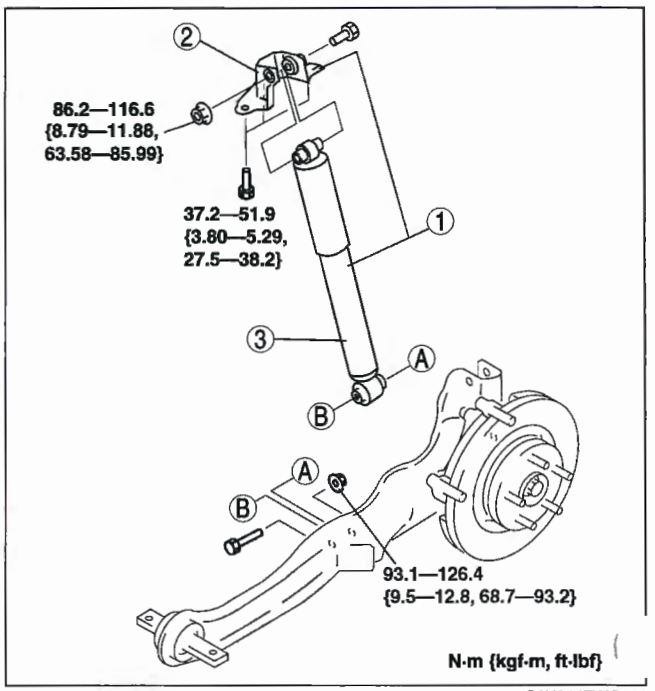

C6U214ZWC001

Bracket Installation Note

1. Install the bracket as shown in the figure.

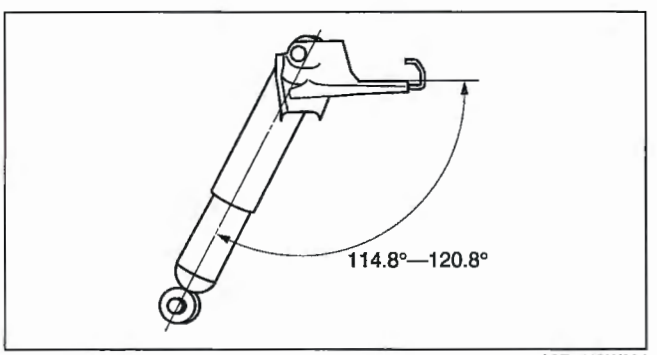

A6E7416W024

REAR SHOCK ABSORBER INSPECTION

E6U021428700W02

1. Inspect the rear shock absorber in the same way as the front shock absorber. (See 02–13–7 FRONT SHOCK ABSORBER INSPECTION.)

REAR SHOCK ABSORBER DISPOSAL

E6U021428700W03

1. Dispose the rear shock absorber in the same way as the front shock absorber. (See 02–13–7 FRONT SHOCK ABSORBER DISPOSAL.)

REAR COIL SPRING REMOVAL/INSTALLATION

E6U021428110W01

1. Remove in the order indicated in the table.
2. Install in the reverse order of removal.
   Inspect the rear wheel alignment. (See 02–11–3 REAR WHEEL ALIGNMENT.)

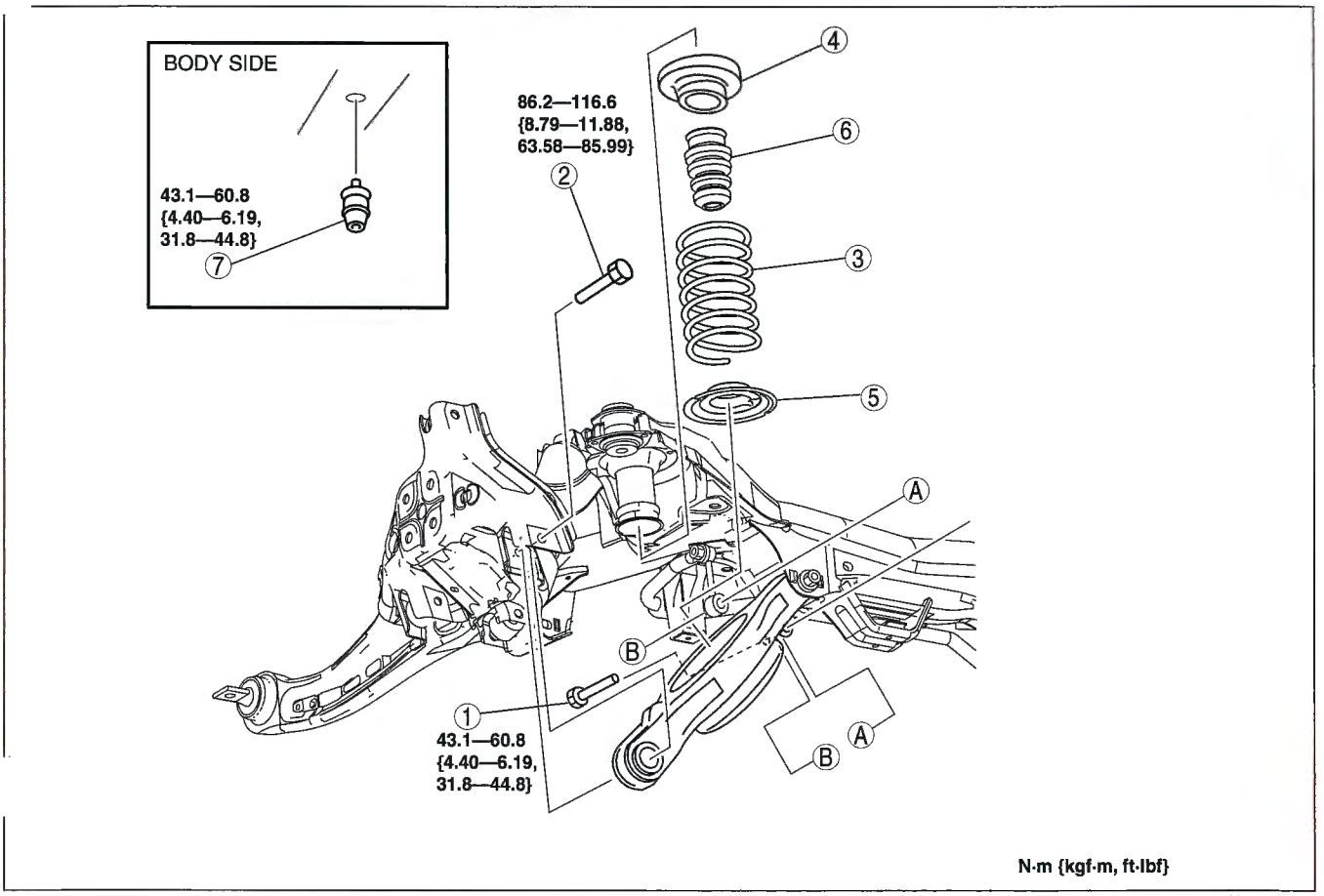

B6U0214W001

1	Bolt (stabilizer control link lower side)
2	Bolt (rear lower arm outer side) (See 02–14–5 Bolt (Rear Lower Arm Outer Side) Removal Note)
3	Rear coil spring (See 02–14–6 Rear Coil Spring Installation Note)

4	Upper spring seat rubber
5	Lower spring seat
6	Bound stopper (spring side)
7	Bound stopper (body side) (See 02–14–5 Bound Stopper (Body Side) Removal/Installation Note)

Bolt (Rear Lower Arm Outer Side) Removal Note

1. Support the lower arm with a jack.
2. Loosen the inner bolt of the lower arm.
3. Remove the outer bolt of the lower arm.

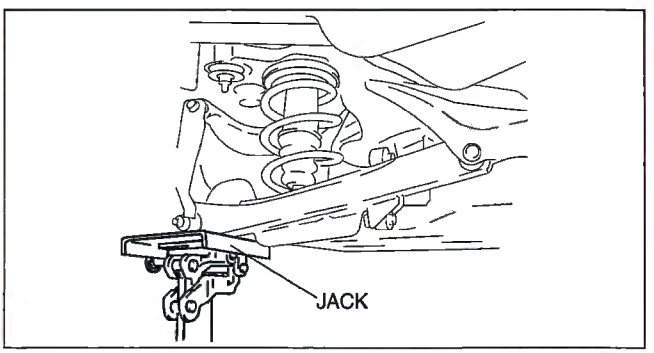

A6E7416W019

Bound Stopper (Body Side) Removal/Installation Note

1. Remove or/and install the bound stopper (body side) using the extension bar.

Rear Coil Spring Installation Note

1. Install the coil spring so that the small outer diameter faces downside.
2. Position the jack under the lower arm and jack up slowly.

   Warning
   - **Installing the coil spring is dangerous. The coil spring could fly off, and cause serious injury or death.**

3. Install the lower arm (outer side) bolt.

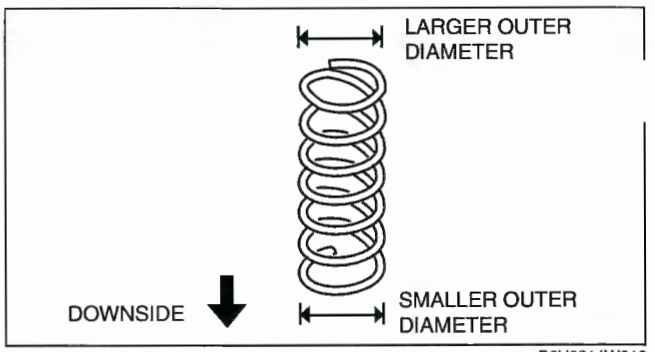

B6U0214W013

REAR LOWER ARM REMOVAL/INSTALLATION

E6U021428310W01

1. Remove in the order indicated in the table.
2. Install in the reverse order of removal.
3. Inspect the rear wheel alignment. (See 02–11–3 REAR WHEEL ALIGNMENT.)

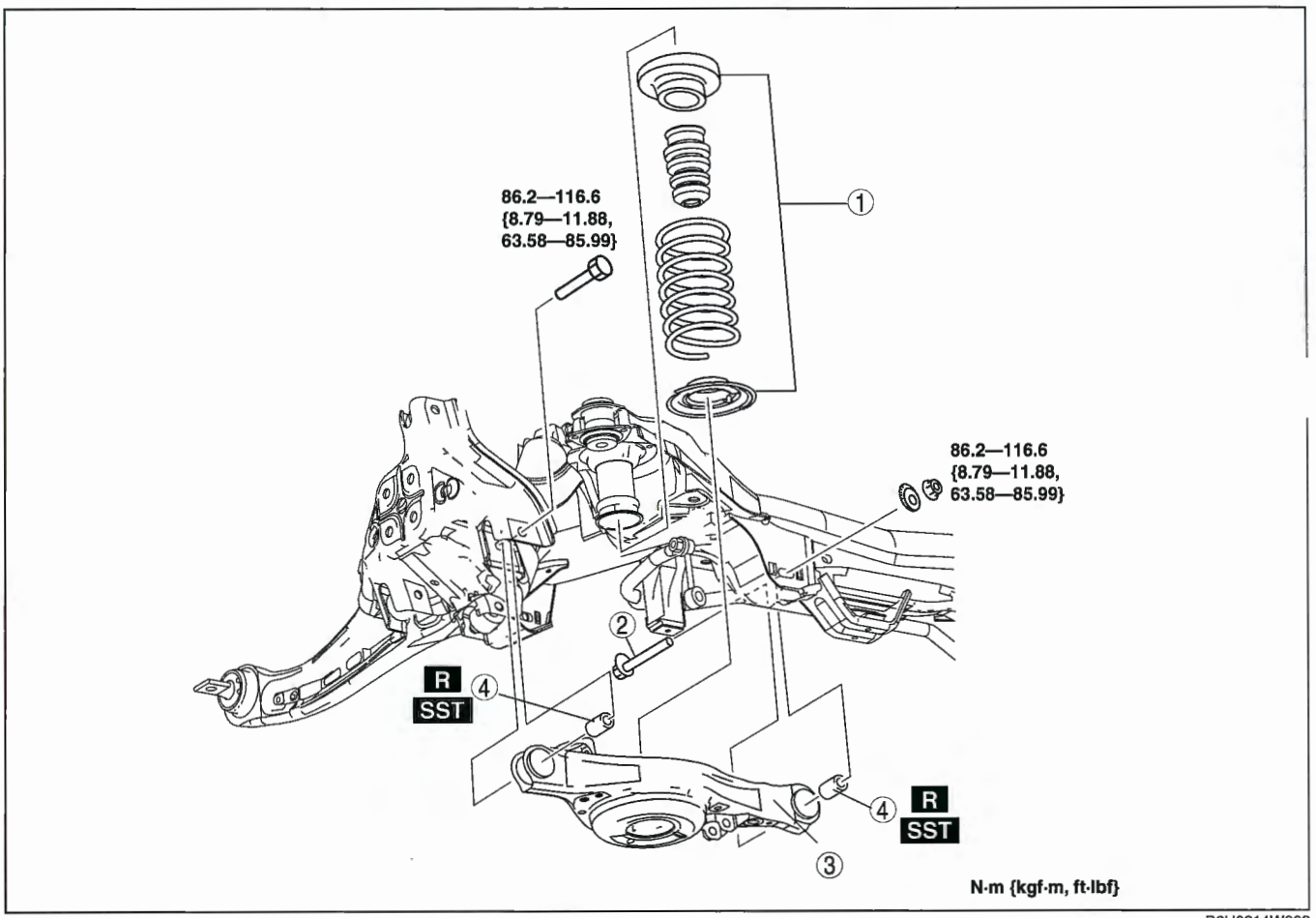

B6U0214W002

1	Rear coil spring component (See 02–14–5 REAR COIL SPRING REMOVAL/ INSTALLATION)
2	Bolt (rear lower arm inner side)
3	Rear lower arm

4	Rear lower arm bushing (See 02–14–7 Rear Lower Arm Bushing Removal Note) (See 02–14–7 Rear Lower Arm Bushing Installation Note)

Rear Lower Arm Bushing Removal Note

1. Press the rear lower arm bushing out using the **SSTs**.

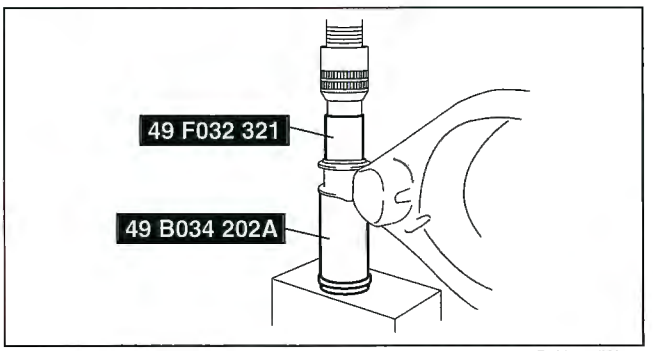

B6U0214W006

Rear Lower Arm Bushing Installation Note

1. Press the rear lower arm bushing in using the **SSTs**.

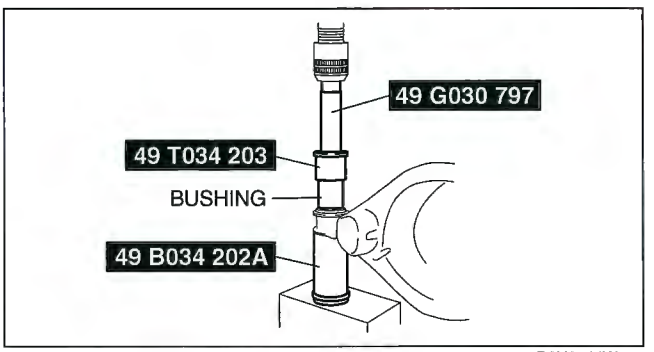

B6U0214W008

REAR UPPER ARM REMOVAL/INSTALLATION

E6U021428210W01

Caution

- **Performing the following procedures without first removing the ABS wheel-speed sensor may possibly cause an open circuit in the harness if it is pulled by mistake. Before performing the following procedures, remove the ABS wheel-speed sensor (axle side) and fix it to an appropriate place where the sensor will not be pulled by mistake while servicing the vehicle.**

1. Remove in the order indicated in the table.
2. Install in the reverse order of removal.
3. Inspect the rear wheel alignment. (See 02–11–3 REAR WHEEL ALIGNMENT.)

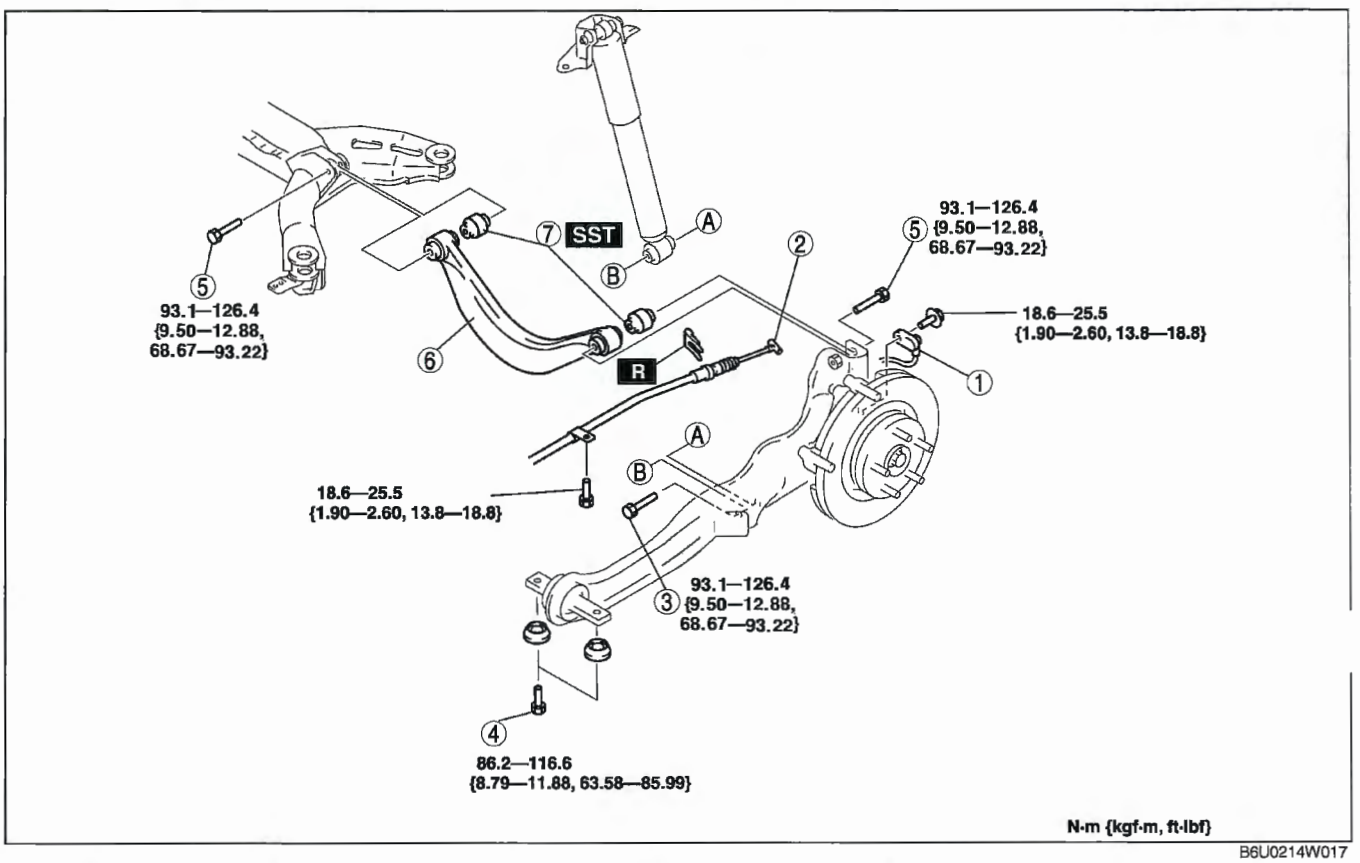

B6U0214W017

1	ABS wheel-speed sensor
2	Parking brake cable
3	Bolt (rear shock absorber lower side) (See 02–14–8 Bolt (Rear Shock Absorber Lower Side) Removal Note)
4	Bolt (trailing link front side)
5	Bolt (rear upper arm) (See 02–14–9 Bolt (Rear Upper Arm) Removal Note)
6	Rear upper arm
7	Rear upper arm bushing (See 02–14–9 Rear Upper Arm Bushing Removal Note) (See 02–14–9 Rear Upper Arm Bushing Installation Note)

Bolt (Rear Shock Absorber Lower Side) Removal Note

1. Support the trailing link with a jack.

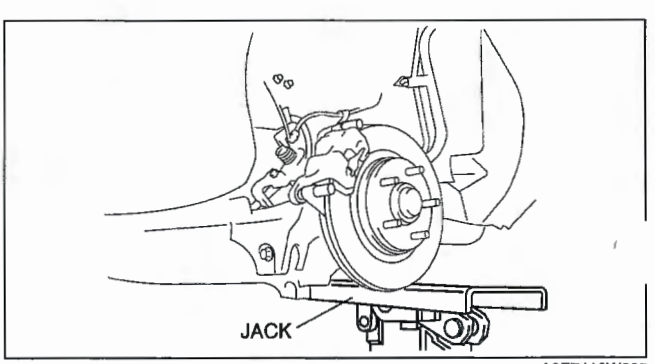

A6E7416W005

Bolt (Rear Upper Arm) Removal Note

1. Loosen the bolts on the inner and outer side of the lateral link.

ar Upper Arm Bushing Removal Note

Press the upper arm bushing out using the **SSTs.**

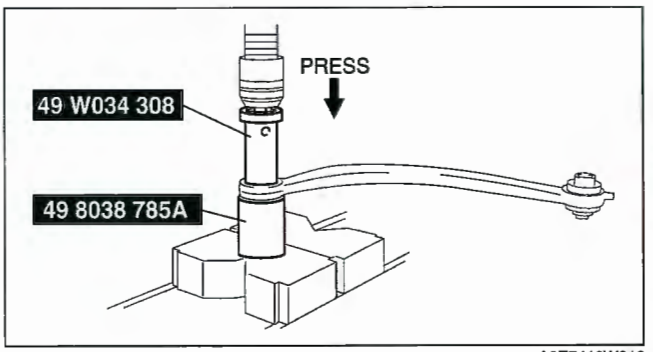

A6E7416W010

Rear Upper Arm Bushing Installation Note

1. Mark the new bushing as shown in the figure.

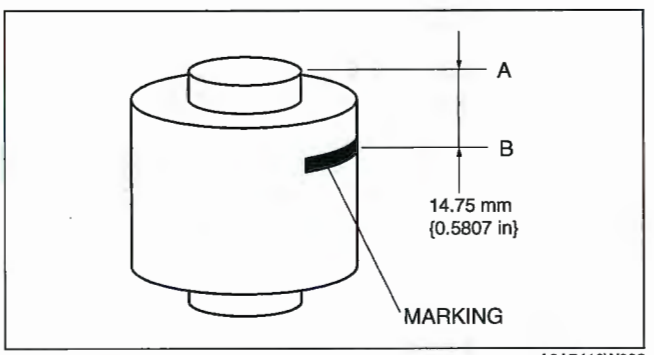

A6A7416W002

Press the bushing in to the marking using the **SSTs.**

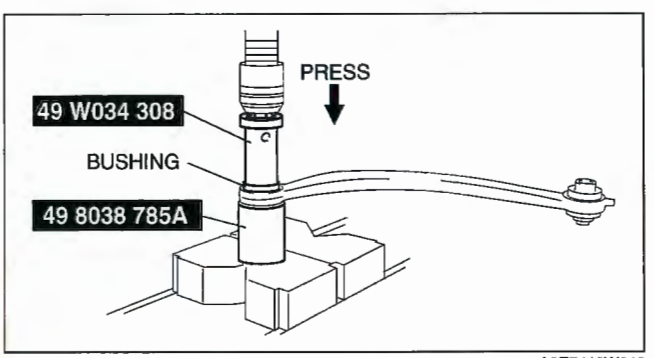

A6E7416W012

3. Verify that clearance distance A—B is **13.75—15.75 mm {0.5414—0.6200 in}**.

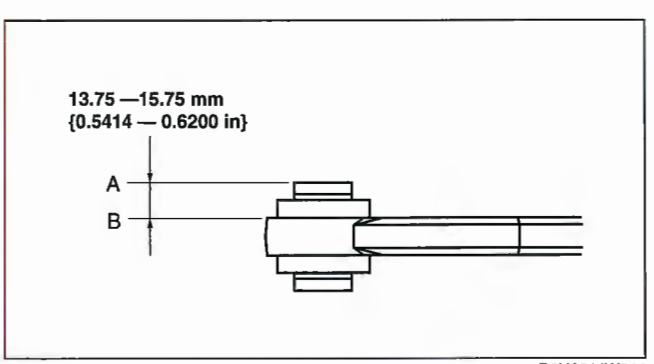

B6U0214W011

REAR LATERAL LINK REMOVAL/INSTALLATION

E6U021428600W01

1. Remove the rear lateral link.

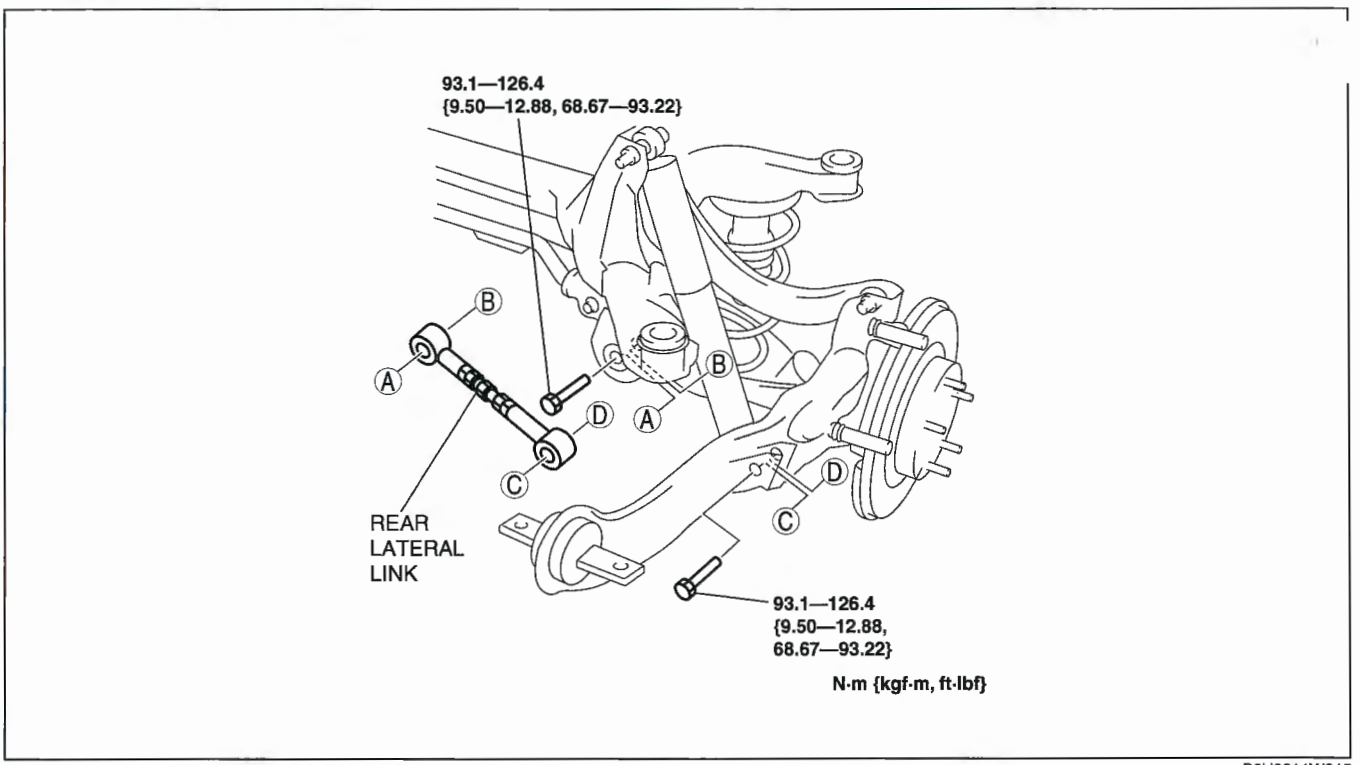

B6U0214W015

Caution

- **When working near left rear suspension, avoid any impact to the fuel tank.**

2. Measure the length L shown in the figure for proper installation.
3. Temporarily loosen a locknut of the rear lateral link.
4. Install the rear lateral link.
5. Inspect the rear wheel alignment. (See 02–11–3 REAR WHEEL ALIGNMENT.)

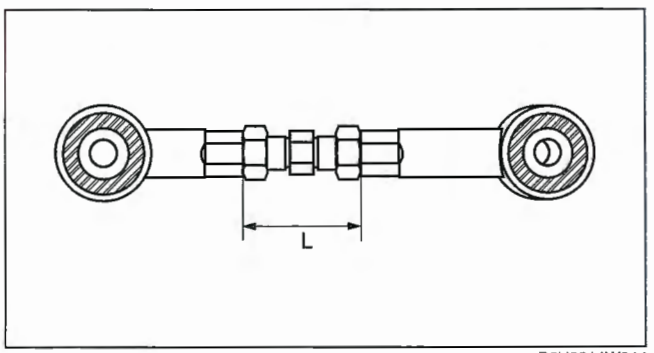

B6U0214W014

REAR STABILIZER REMOVAL/INSTALLATION

E6U021428100W01

1. Remove in the order indicated in the table.
2. Install in the reverse order of removal.

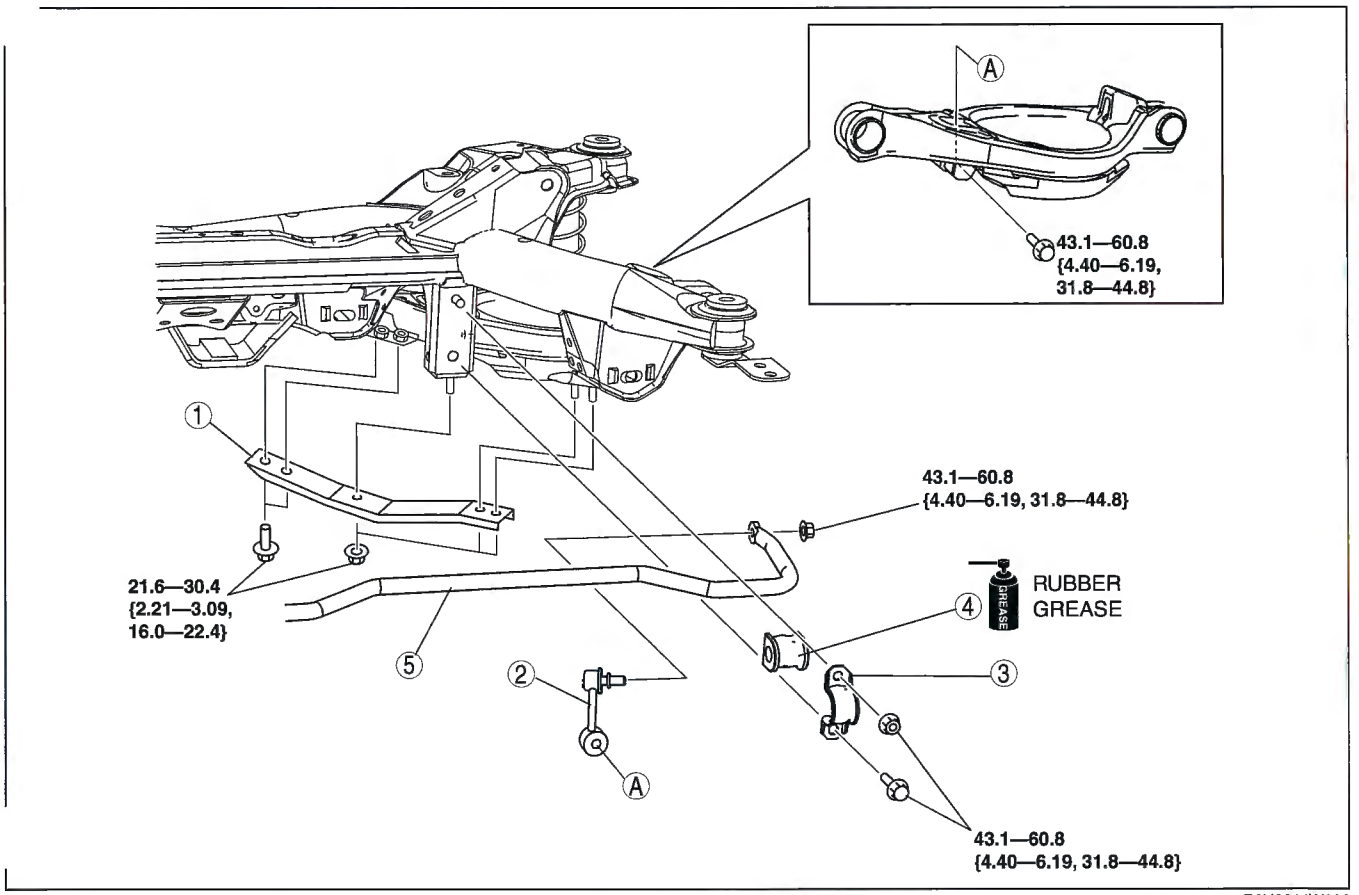

B6U0214W003

1	Side bracket member
2	Stabilizer control link
3	Stabilizer bracket

4	Bushing
5	Rear stabilizer

REAR STABILIZER REMOVAL/INSTALLATION [AWD]

E6U021428100W02

1. Remove in the order indicated in the table.
2. Install in the reverse order of removal.

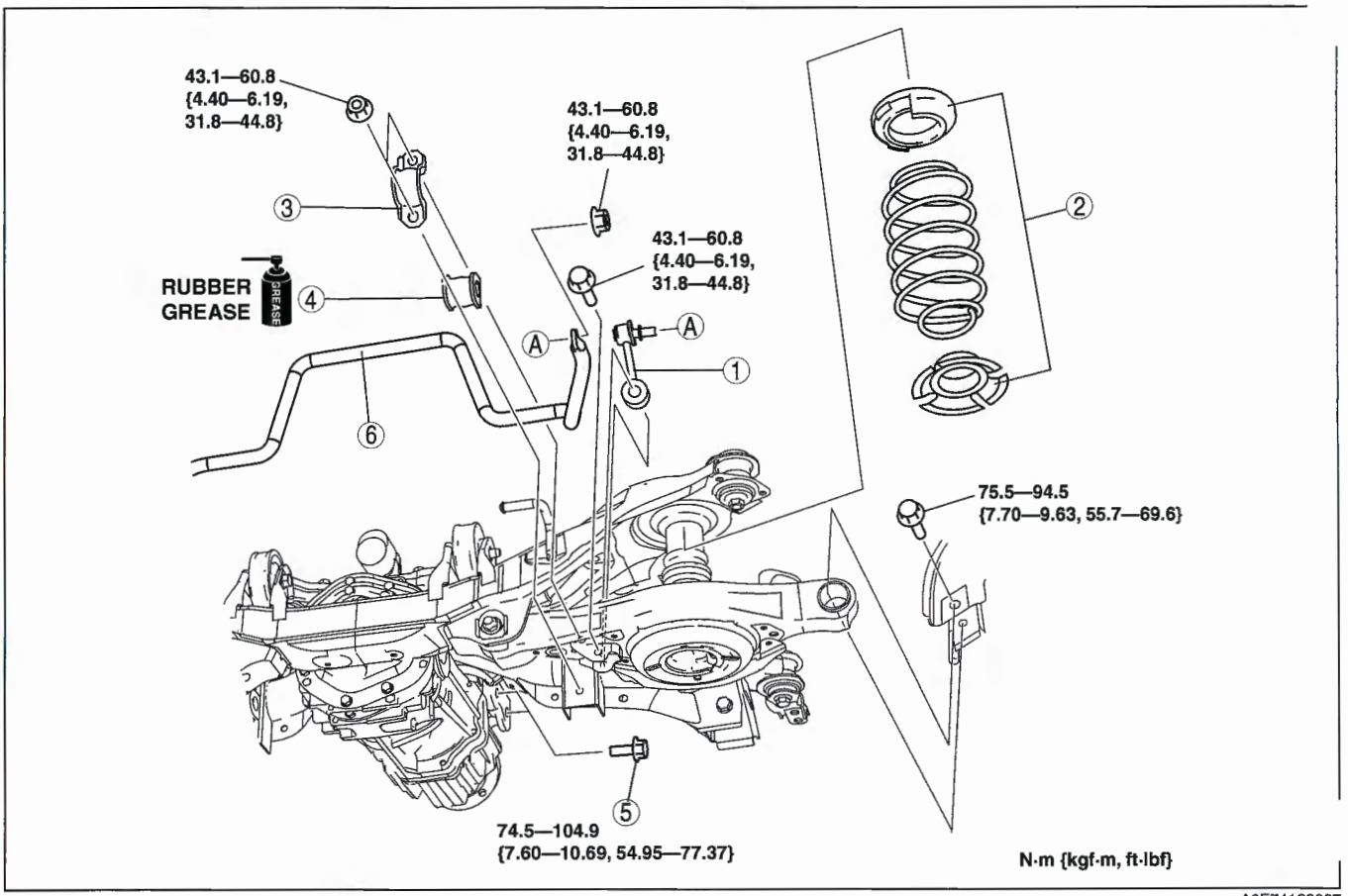

A6E74162007

1	Stabilizer control link
2	Coil spring component (One side only)
3	Stabilizer bracket
4	Bushing

5	Bolt (Differential front side) (See 02–14–12 Bolt (Differential Front Side) Removal Note.) (See 02–14–13 Bolt (Differential Front Side) Installation Note.)
6	Rear stabilizer

Bolt (Differential Front Side) Removal Note

1. Disconnect differential oil temperature sensor connector and 4WD solenoid connector.
2. Support the differential with a jack as shown in the figure.
3. Remove the bolt.

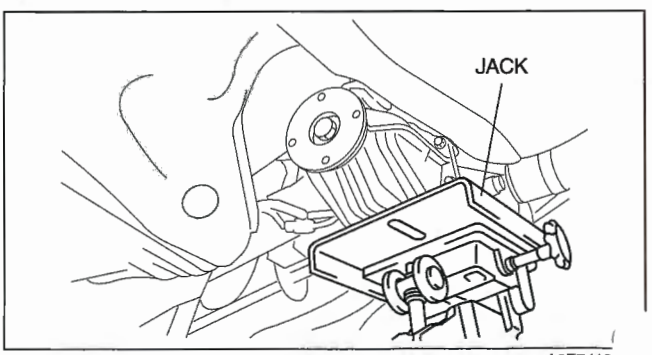

A6E7416

Bolt (Differential Front Side) Installation Note

1. Support the differential with a jack, and then install the bolt.
   Connect differential oil temperature sensor connector and 4WD solenoid connector.

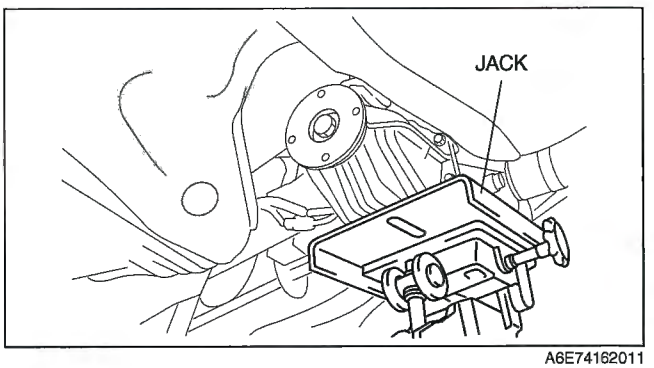

A6E74162011

STABILIZER CONTROL LINK INSPECTION

E6U021434150W01

1. Remove the stabilizer control link from the vehicle. (See 02–14–11 REAR STABILIZER REMOVAL/INSTALLATION.)
2. Inspect for bending and damage.
3. Measure the ball joint starting torque.
   (1) Rock the ball joint stud side to side 10 times.
   (2) Rotate the ball joint stud 10 times.
   (3) Measure the starting torque using a suitable Allen socket and a torque wrench.

   Rear stabilzier control link ball joint starting torque
   0.2—0.8 N·m {2.1—8.1 kgf·cm, 1.8—7.0 in·lbf}

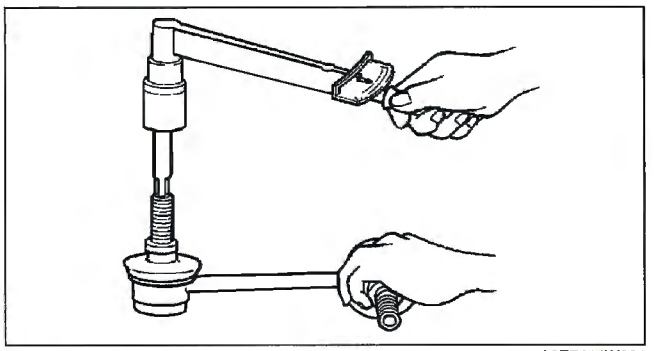

A6E7414W021

TRAILING LINK REMOVAL/INSTALLATION

E6U021428200W01

Caution

- **Performing the following procedures without first removing the ABS wheel-speed sensor may possibly cause an open circuit in the harness if it is pulled by mistake. Before performing the following procedures, remove the ABS wheel-speed sensor (axle side) and fix it to an appropriate place where the sensor will not be pulled by mistake while servicing the vehicle.**

1. Remove in the order indicated in the table.
2. Install in the reverse order of removal.
3. Inspect the rear wheel alignment. (See 02–11–3 REAR WHEEL ALIGNMENT.)

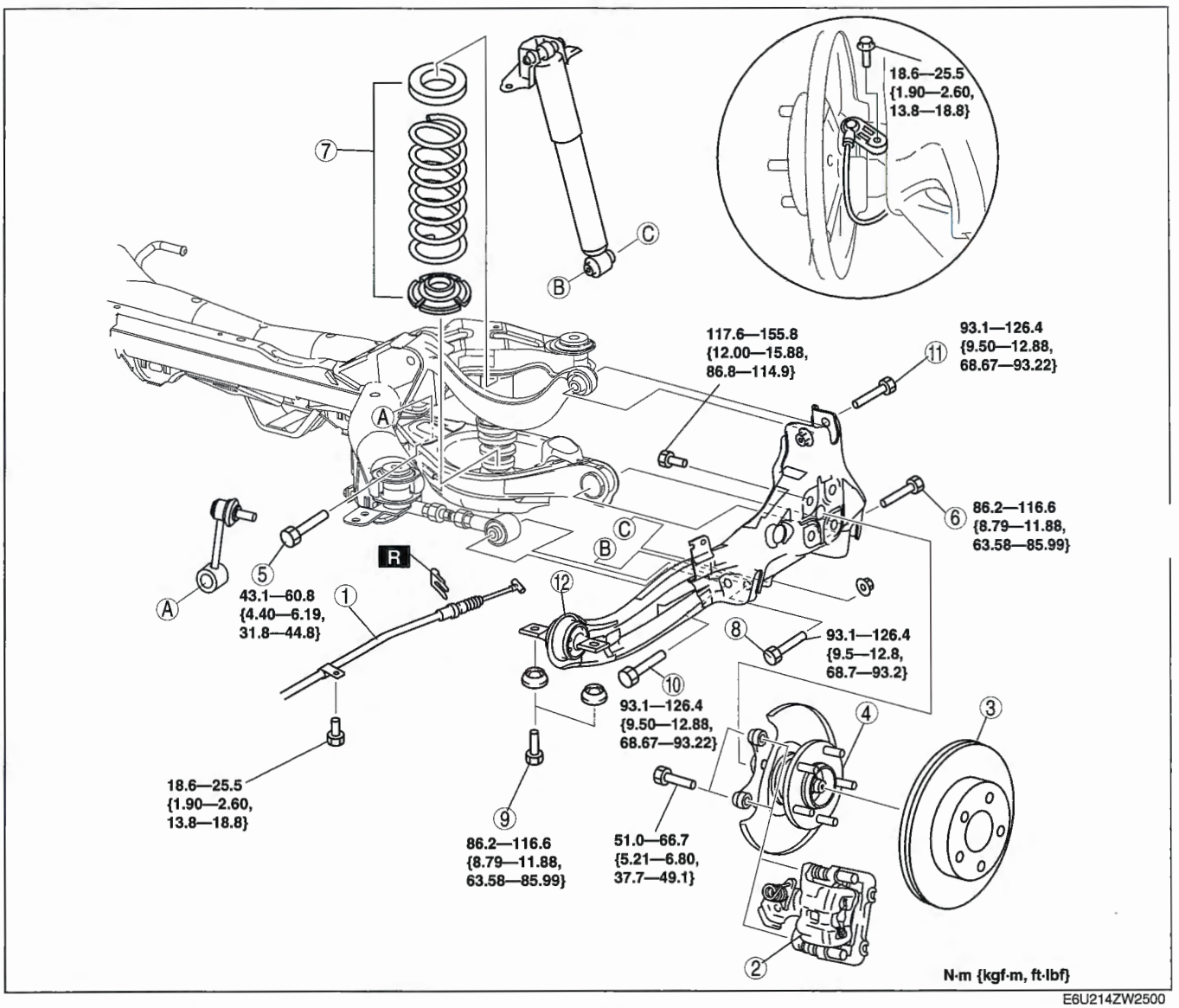

E6U214ZW2500

1	Parking brake cable
2	Caliper component (See 02–14–15 Caliper Component Removal Note)
3	Disc plate
4	Spindle and hub component (See 03–12–2 WHEEL HUB, HUB SPINDLE REMOVAL/INSTALLATION)
5	Bolt (stabilizer control link lower side)
6	Bolt (rear lower arm outer side) (See 02–14–5 Bolt (Rear Lower Arm Outer Side) Removal Note)

7	Spring component
8	Bolt (rear shock absorber lower side)
9	Bolt (trailing link front side) (See 02–14–15 Bolt (Trailing Link Front Side) Removal Note) (See 02–14–15 Bolt (Trailing Link Front Side) Installation Note)
10	Bolt (rear lateral link outer side) (See 02–14–15 Bolt (Rear Lateral Link Outer Side Removal Note)
11	Bolt (rear upper arm outer side)
12	Trailing link

Caliper Component Removal Note

1. Suspend the caliper aside with cable.

lt (Trailing Link Front Side) Removal Note

. Support the trailing link with a jack.

Caution

- **Removing the trailing link is dangerous. The trailing link could fall and cause serious injury or death. Verify that the jack securely supports the trailing link.**

2. Remove the bolts (trailing link front side).

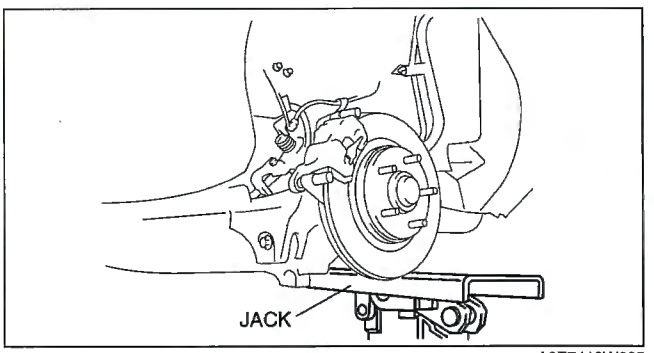

A6E7416W005

Bolt (Rear Lateral Link Outer Side) Removal Note

1. Loosen the bolt (lateral link inner side).
2. Remove the bolt (lateral link outer side).

Bolt (Trailing Link Front Side) Installation Note

1. Support the trailing link with a jack.
2. Tighten the bolts (trailing link front side).

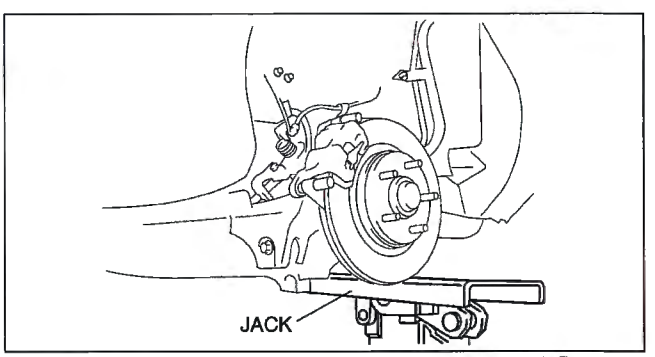

A6E7416W005

TRAILING LINK REMOVAL/INSTALLATION [AWD]

E6U021428200W02

Caution

- **Performing the following procedures without first removing the ABS wheel-speed sensor may possibly cause an open circuit in the harness if it is pulled by mistake. Before performing the following procedures, remove the ABS wheel-speed sensor (axle side) and fix it to an appropriate place where the sensor will not be pulled by mistake while servicing the vehicle.**

1. Remove in the order indicated in the table.
2. Install in the reverse order of removal.
3. Inspect the rear wheel alignment.
   (See 02–11–3 REAR WHEEL ALIGNMENT.)

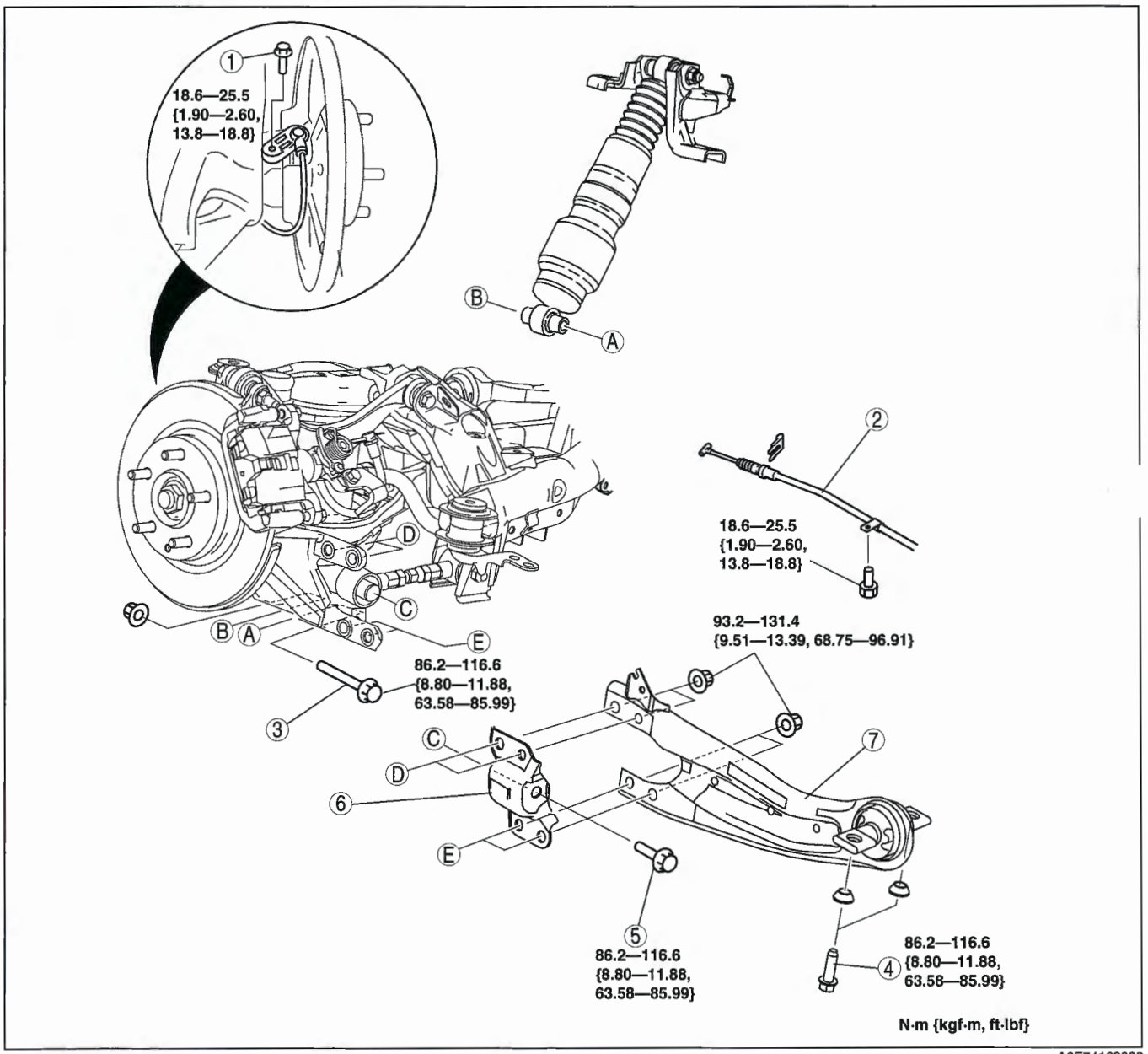

A6E74162008

1	ABS wheel-speed sensor
2	Parking brake cable
3	Bolt (shock absorber lower side)
4	Bolt (trailing link front side) (See 02–14–17 Bolt (Trailing Link Front Side) Removal Note.) (See 02–14–17 Bolt (Trailing Link Front Side) Installation Note.)
5	Bolt (Lateral link outer side) (See 02–14–17 Bolt (Lateral Link Outer Side) Removal Note.) (See 02–14–17 Bolt (Lateral Link Outer Side) Installation Note.)
6	Toe link bracket
7	Trailing link

Bolt (Trailing Link Front Side) Removal Note

1. Support the trailing link with a jack.

Caution

- **Removing the trailing link is dangerous. The trailing link could fall and cause serious injury or death. Verify that the jack securely supports the trailing link.**

2. Remove the bolts (trailing link front side).

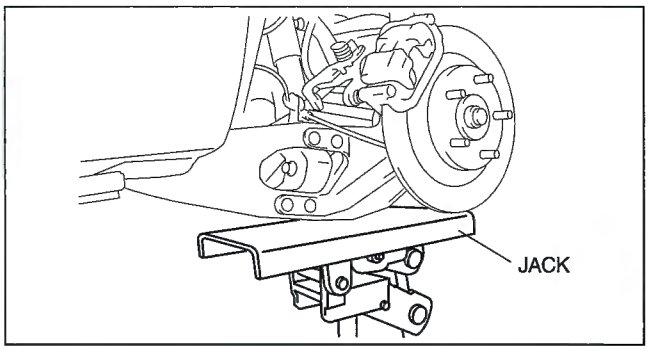

A6E74162010

Bolt (Lateral Link Outer Side) Removal Note

1. Loosen the bolt (lateral link inner side).
2. Remove the bolt (lateral link outer side).

Bolt (Lateral Link Outer Side) Installation Note

1. Tighten the bolt (lateral link outer side).
2. Tighten the bolt (lateral link inner side).

Tightening torque
86.2—116.6 N·m {8.80—11.88 kgf·m, 63.58—85.99 ft·lbf}

Bolt (Trailing Link Front Side) Installation Note

1. Support the trailing link with a jack.
2. Tighten the bolts (trailing link front side).

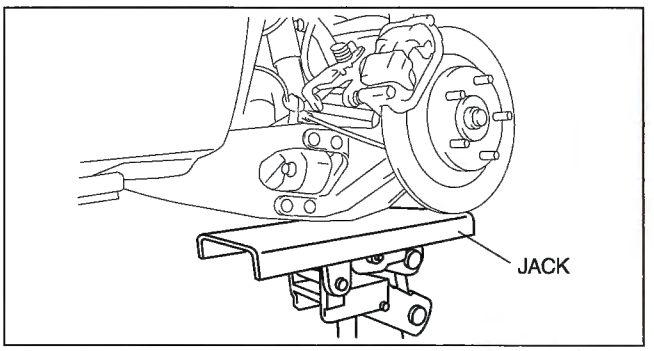

A6E74162010

REAR CROSSMEMBER REMOVAL/INSTALLATION

E6U021428400W01

Caution

- **Performing the following procedures without first removing the ABS wheel-speed sensor may possibly cause an open circuit in the harness if it is pulled by mistake. Before performing the following procedures, remove the ABS wheel-speed sensor (axle side) and fix it to an appropriate place where the sensor will not be pulled by mistake while servicing the vehicle.**

1. Remove the pre-silencer. (See 01–15A–2 EXHAUST SYSTEM REMOVAL/INSTALLATION [L3].) (See 01–15C–2 EXHAUST SYSTEM REMOVAL/INSTALLATION [AJ].)
2. Remove in the order indicated in the table.
3. Install in the reverse order of removal.
4. Inspect the rear wheel alignment. (See 02–11–3 REAR WHEEL ALIGNMENT.)

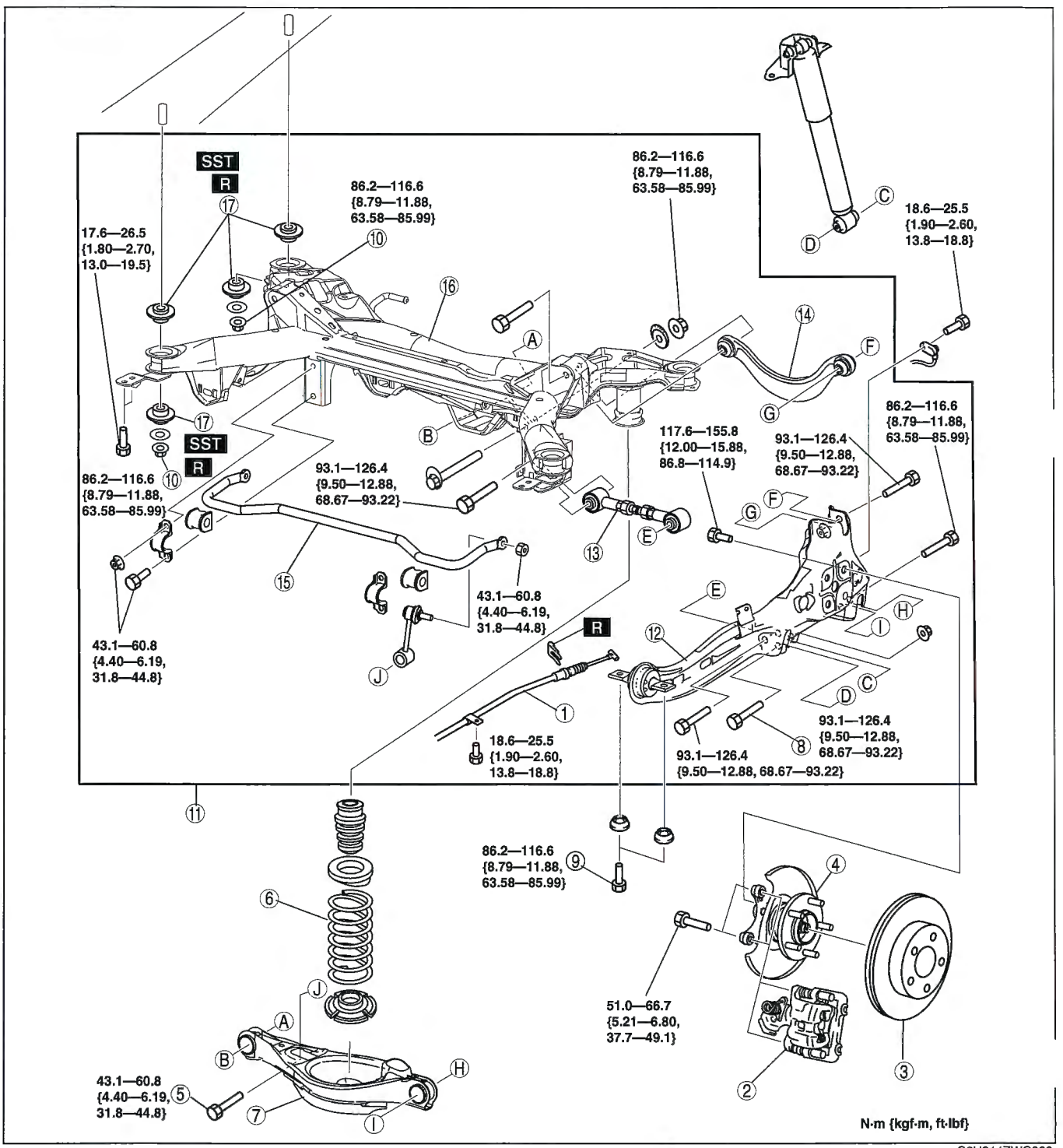

C6U214ZWC003

1	Parking brake cable
2	Caliper component (See 02–14–19 Caliper Component Removal Note)
3	Disc plate
4	Spindle and hub component (See 03–12–2 WHEEL HUB, HUB SPINDLE REMOVAL/INSTALLATION)
5	Bolt (stabilizer control link)
6	Rear coil spring (See 02–14–5 REAR COIL SPRING REMOVAL/INSTALLATION)
7	Rear lower arm (See 02–14–6 REAR LOWER ARM REMOVAL/INSTALLATION)
8	Bolt (rear shock absorber lower side)
9	Bolt (trailing link front side) (See 02–14–19 Bolt (Trailing Link Front Side) Removal Note) (See 02–14–20 Bolt (Trailing Link Front Side) Installation Note)
10	Nut (crossmember)
11	Crossmember component (See 02–14–19 Crossmember Component Removal Note)
12	Trailing link
13	Rear lateral link
14	Rear upper arm
15	Rear stabilizer
16	Rear crossmember
17	Rear crossmember bushing (See 02–14–20 Rear Crossmember Bushing Removal Note) (See 02–14–20 Rear Crossmember Bushing Installation Note)

Caliper Component Removal Note

1. Remove the caliper, and suspend it aside with cable.

Bolt (Trailing Link Front Side) Removal Note

1. Support the trailing link with a jack.
2. Loosen the bolt (lateral link inner side).

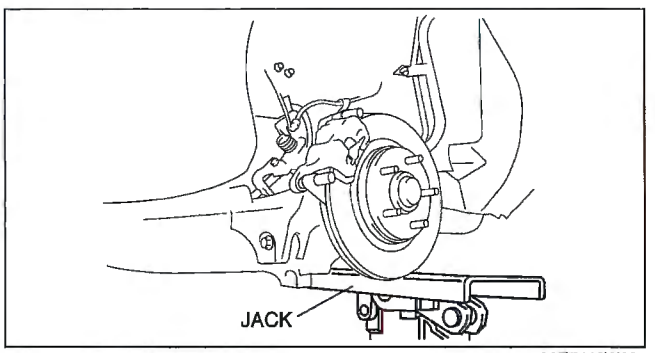

A6E7416W005

Crossmember Component Removal Note

Warning

- **Removing the crossmember is dangerous. The crossmember component could fall and cause serious injury or death. Verify that the jack securely supports the crossmember component.**

1. Support the crossmember component using a jack and remove the nuts.
2. Remove the crossmember component.

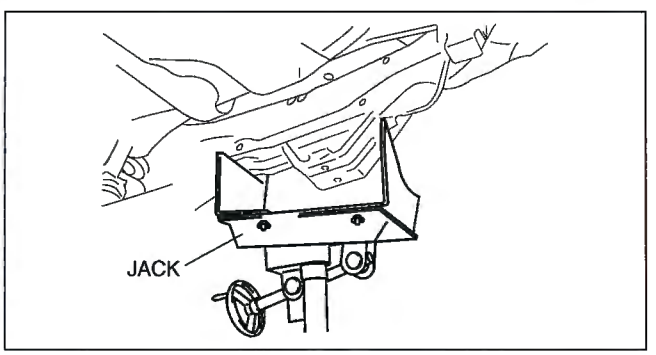

A6E7416W014

Rear Crossmember Bushing Removal Note

1. Remove the bushing using a flathead screwdriver, being careful not to damage the rear crossmember.

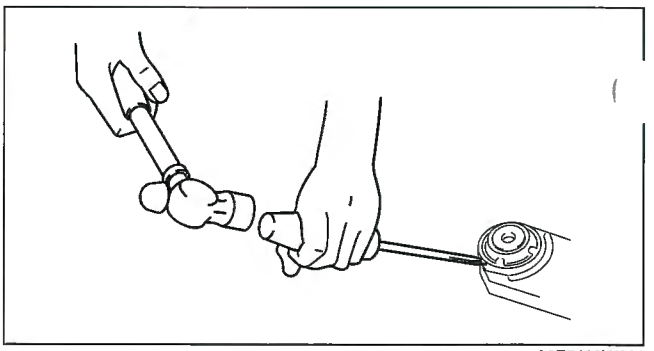

A6E7416W001

Rear Crossmember Bushing Installation Note

1. Set the bushings as shown in the figure.

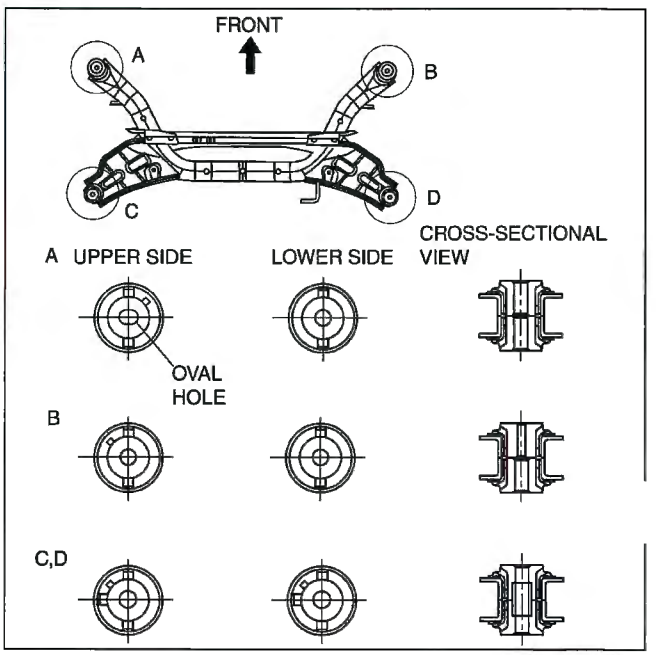

A6E7416W021

2. Tap the bushing onto the rear crossmember using the **SSTs**.

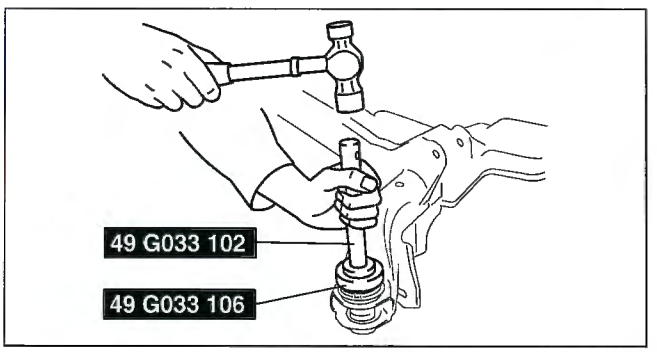

A6E7416W002

Bolt (Trailing Link Front Side) Installation Note

1. Support the trailing link with a jack.
2. Tighten the bolts (trailing link front side).

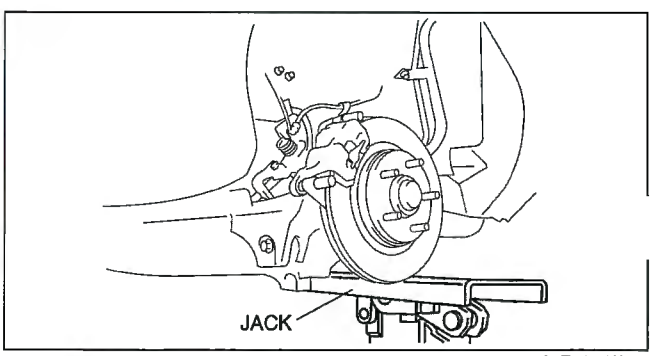

A6E7416W005

REAR CROSSMEMBER REMOVAL/INSTALLATION [AWD]

E6U021428400W02

Caution

- **Performing the following procedures without first removing the ABS wheel-speed sensor may possibly cause an open circuit in the harness if it is pulled by mistake. Before performing the following procedures, remove the ABS wheel-speed sensor (axle side) and fix it to an appropriate place where the sensor will not be pulled by mistake while servicing the vehicle.**

1. Remove the middle pipe.
   (See 01–15B–2 EXHAUST SYSTEM REMOVAL/INSTALLATION [L3 WITH TC].)
2. Remove in the order indicated in the table.
3. Install in the reverse order of removal.
4. Inspect the rear wheel alignment.
   (See 02–11–3 REAR WHEEL ALIGNMENT.)

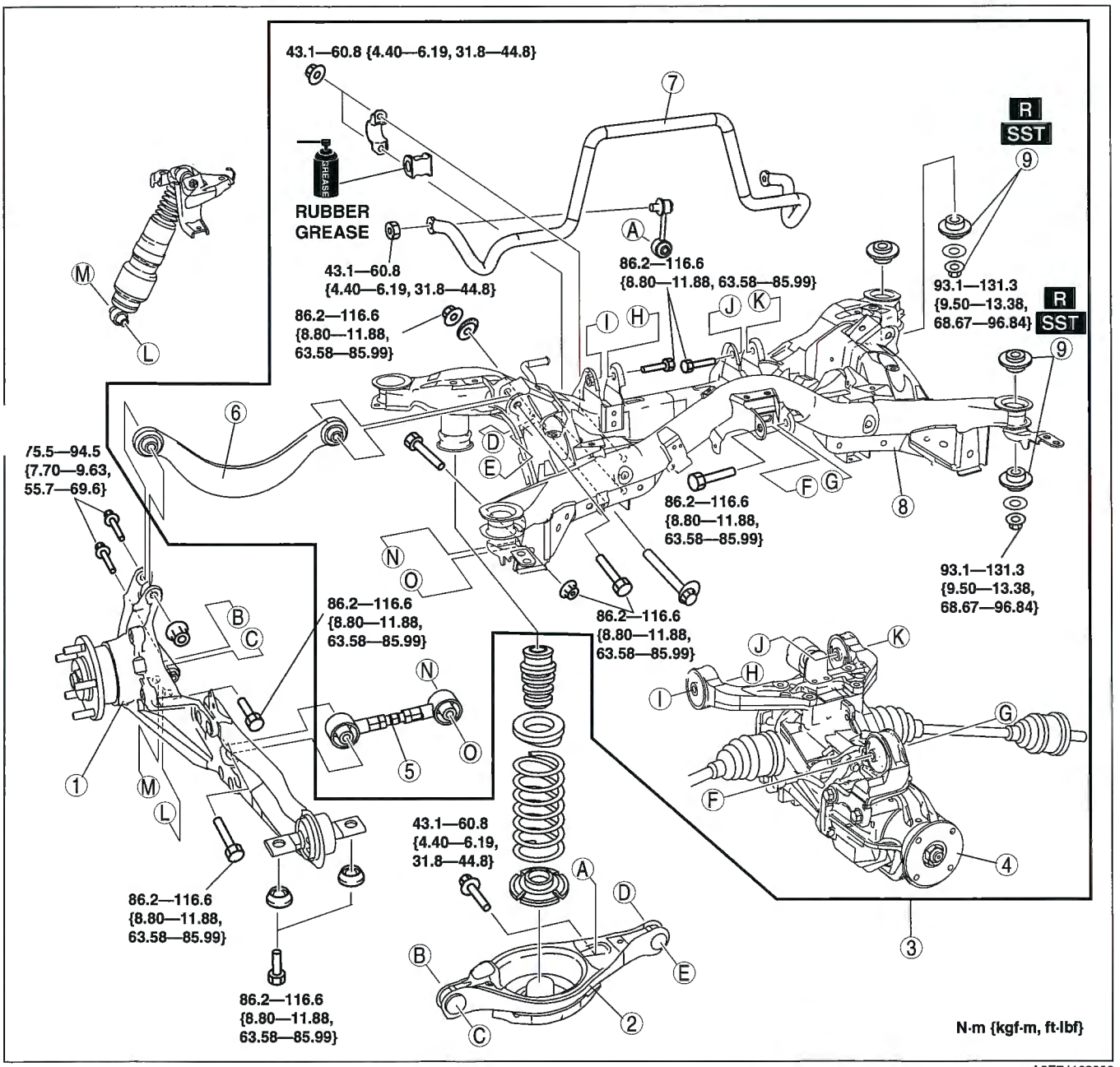

A6E74162009

1	Trailing link, knuckle component (See 03–12–5 WHEEL HUB, KNUCKLE REMOVAL/INSTALLATION [AWD].)
2	Rear lower arm

3	Crossmember component, differential and drive shaft (See 02–14–22 Crossmember component, Differential And Drive Shaft Removal Note.)
4	Differential and drive shaft

5	Rear lateral link
6	Rear upper arm
7	Rear stabilizer
8	Rear crossmember
9	Rear crossmember bushing (See 02–14–22 Rear Crossmember Bushing Removal Note.) (See 02–14–23 Rear Crossmember Bushing Installation Note.)

Crossmember component, Differential And Drive Shaft Removal Note

1. Support the differential with a jack, and remove the nut.

   Warning
   - **Removing the crossmember component, differential and drive shaft is dangerous. The crossmember component, differential and drive shaft could fall and cause serious injury or death. Verify that the jack securely supports the differential lower side.**

2. Remove the crossmember component, differential and drive shaft.

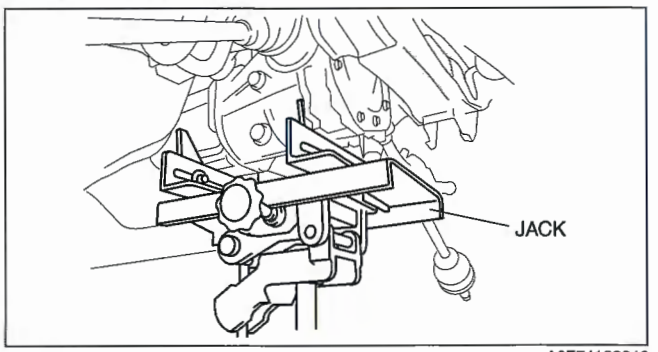

A6E74162012

Rear Crossmember Bushing Removal Note

1. Remove the bushing using a screw driver (-), being careful not to damage the rear crossmember.

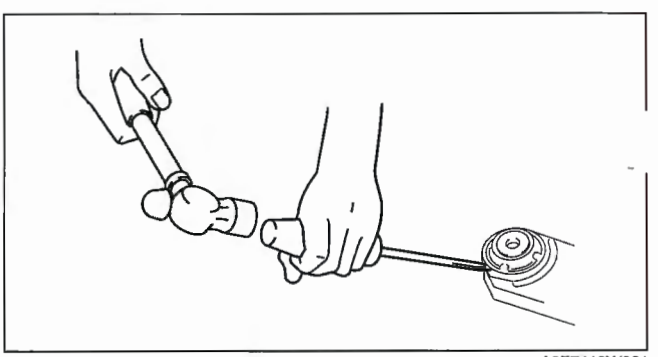
A6E7416W001

Rear Crossmember Bushing Installation Note

1. Set the bushings as shown in the figure.

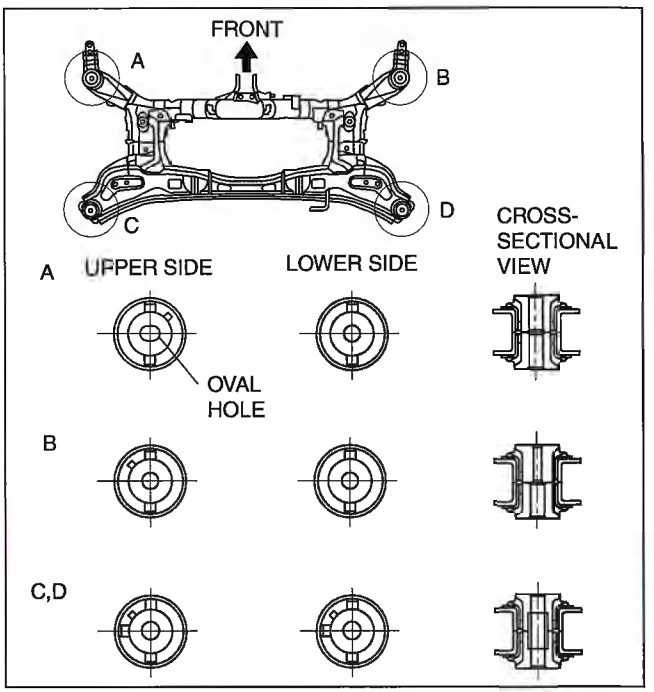

A6E74162014

2. Tap the bushing onto the rear crossmember using the **SSTs**.

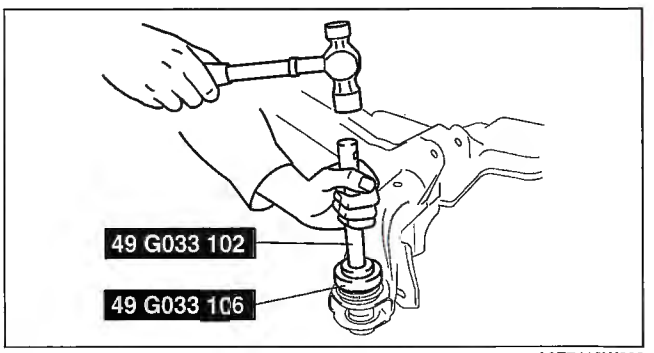

A6E7416W002

02–50 TECHNICAL DATA

SUSPENSION TECHNICAL DATA 02–50–1

SUSPENSION TECHNICAL DATA

E6U025000000W01

Front wheel alignment [4SD, 5HB] (Unloaded*1)

Item		Specification				
Fuel gauge indication		Empty	1/4	1/2	3/4	Full
Maximum steering angle	Inner	34°±3°				
	Outer	29°±3°				
Total toe-in	(mm {in})	Tire: 2±4 {0.08±0.16}, Rim inner: 1.4±2.8 {0.06±0.12}				
	(degree)	0°11′±0°22′				
Caster angle*2 (Reference value)		3°37'±1°	3°39'±1°	3°41'±1°	3°44'±1°	3°47'±1°
Camber angle*2 (Reference value)	L3	–0°16′±1°			–0°17′±1°	
	AJ	–0°17′±1°			–0°18′±1°	
Steering axis inclination (Reference value)	L3	5°26'			5°28'	
	AJ	5°30'			5°29'	

*1 : Engine coolant and engine oil are at specified level. Spare tire, jack and tools are in designated position.
*2 : Difference between left and right must not exceed **1°30'** .

Front wheel alignment [WGN] (Unloaded*1)

Item		Specification				
Fuel gauge indication		Empty	1/4	1/2	3/4	Full
Maximum steering angle	Inner	34°±3°				
	Outer	29°±3°				
al toe-in	(mm {in})	Tire: 2±4 {0.08±0.16}, Rim inner: 1.4±2.8 {0.06±0.12}				
	(degree)	0°11′±0°22′				
Caster angle*2 (Reference value)		3°29'±1°	3°32'±1°	3°34'±1°	3°37'±1°	3°39'±1°
Camber angle*2 (Reference value)		–0°16′±1°			–0°17′±1°	
Steering axis inclination (Reference value)		5°28'			5°27'	

*1 : Engine coolant and engine oil are at specified level. Spare tire, jack and tools are in designated position.
*2 : Difference between left and right must not exceed **1°30'** .

Front wheel alignment [4SD 4WD] (Unloaded*1)

Item		Fuel gauge indication				
		Empty	1/4	1/2	3/4	Full
Maximum steering angle	Inner	36°±3°				
	Outer	30°±3°				
Total toe-in	(mm {in})	Tire: 2±4 {0.08±0.16}, Rim inner: 1±3 {0.04±0.12}				
	(degree)	0°11′±0°22′				
Caster angle*2 (reference value)		3°46'±1°	3°48'±1°	3°50'±1°	3°51'±1°	3°53'±1°
Camber angle*2(reference value)		-0°16'±1°			-0°17'±1°	
Steering axis inclination (reference value)		5°28'			5°30'	

*1 : Engine coolant and engine oil are at specified level. Spare tire, jack and tools are in designated position.
*2 : Difference between left and right must not exceed **1°30'** .

Rear wheel alignment [4SD, 5HB] (Unloaded*1)

Item		Specification				
Fuel gauge indication		Empty	1/4	1/2	3/4	Full
Total toe-in	(mm {in})	Tire: 2±4 {0.08±0.16}, Rim inner: 1.4±2.8 {0.06±0.12}				
	(degree)	0°11′±0°22′				
Camber angle*2		–1°05′±1°	–1°07′±1°	–1°09′±1°	–1°11′±1°	–1°13′±1°
Thrust angle		0°±0°48′				

*1 : Engine coolant and engine oil are at specified level. Spare tire, jack and tools are in designated position.
*2 : Difference between left and right must not exceed **1°30'** .

Rear wheel alignment [WGN] (Unloaded*1)

Item		Specification				
Fuel gauge indication		Empty	1/4	1/2	3/4	Full
Total toe-in	(mm {in})	Tire: 2±4 {0.08±0.16}, Rim inner: 1.4±2.8 {0.06±0.12}				
	(degree)	0°11′±0°22′				
Camber angle*2		–0°59′±1°	–1°00′±1°	–1°02′±1°	–1°04′±1°	–1°06′±1°
Thrust angle		0°±0°48′				

*1 : Engine coolant and engine oil are at specified level. Spare tire, jack and tools are in designated position.
*2 : Difference between left and right must not exceed **1°30'** .

Rear wheel alignment [4SD 4WD]

Item		Fuel gauge indication				
		Empty	1/4	1/2	3/4	Full
Total toe-in	(mm {in})	Tire: 2±4 {0.08±0.16}, Rim inner: 1±3 {0.04±0.12}				
	(degree)	0°11′±0°22′				
Camber angle*2		–1°28′±1°	–1°30′±1°	–1°33′±1°	–1°35′±1°	–1°37′±1°
Thrust angle	(degree)	0°±0°48′				

*1 : Engine coolant and engine oil are at specified level. Spare tire, jack and tools are in designated position.
*2 : Difference between left and right must not exceed **1°30'** .

Suspension

Item	Specification
Front upper arm ball joint rotation torque	1.5 N·m {15.0 kgf·cm, 13.2 in·lbf} max.
Front lower arm (front) ball joint rotation torque	1.18—2.23 N·m {12.1—22.7 kgf·cm, 10.5—19.7 in·lbf}
Front lower arm (rear) ball joint rotation torque	1.00—2.22 N·m {10.2—22.6 kgf·cm, 8.86—19.6 in·lbf}
Front stabilzier control link ball joint starting torque	0.23—0.47 N·m {2.4—4.7 kgf·cm, 2.1—4.1 in·lbf}
Rear stabilzier control link ball joint starting torque	0.23—0.47 N·m {2.4—4.7 kgf·cm, 2.1—4.1 in·lbf}

Wheel and tire

Item			Specification		
Standard tire and wheel					
Wheel	Size		16 × 6 1/2JJ	17 × 7JJ	18 × 7J
	Offset	(mm {in})	55 {2.17}	60 {2.36}	55 {2.17}
	Pitch circle diameter	(mm {in})	114.3 {4.50}		
	Material		Steel	Aluminum alloy	
Tire	Size		P205/50R16 91V	P215/50R17 93V	L3 with TC: 215/45R18 93Y Except L3 with TC: 215/45R18 93W
	Air pressure (kPa {kgf/cm^2, psi})	Front	220 {2.2, 32}	220 {2.2, 32}	L3 with TC: 260 {2.6, 38} Except L3 with TC: 240 {2.4, 35}
		Rear			
	Remaining tread	(mm {in})	1.6 {0.06}		
Wheel and tire	Wheel and tire runout (mm {in})	Radial direction	1.5 {0.06} max.		
		Lateral direction	2.5 {0.10} max.	2.0 {0.08} max.	
	Wheel imbalance	(g {oz})	8 {0.28} max.	Adhesive-type*1: 11 {0.39} max. Knock-type*2: 7 {0.25} max.	Adhesive-type*1: 10 {0.35} max. Knock-type*2: 6 {0.21} max.
Temporary spare tire					
Wheel	Size		16×4T		L3 with TC: 17×4T Except L3 with TC: 16×4T
	Offset	(mm {in})	40 {1.57}		
	Pitch circle diameter	(mm {in})	114.3 {4.50}		
	Material		Steel		
Tire	Size		T115/70 D16		L3 with TC: T145/70D 17 Except L3 with TC: T115/70 D16
	Air pressure	(kPa {kgf/cm^2, psi})	420 {4.2, 60}		
Wheel and tire	Wheel and tire runout (mm {in})	Radial direction	2.0 {0.08} max.		
		Lateral direction	2.5 {0.10} max.		

*1 : Total weight exceeds **160 g {5.65 oz}** .
*2 : One balance weight: **60 g {2.12 oz} max** . If the total weight exceeds **100 g {3.53 oz}** on one side, rebalance after moving the tire around on the rim. Do not use three or more balance weights.

02–60 SERVICE TOOLS

SUSPENSION 02–60–1

SUSPENSION

E6U026000000W01

49 T034 1A0 Coil spring compressor set 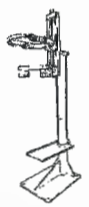	49 T028 3A0 Ball joint puller set 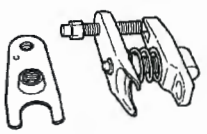	49 T034 202A Guide 
49 B034 216 Installer 	49 S120 620 Bearing installer 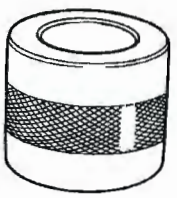	49 T034 203 Attachment 
49 G030 797 Handle 	49 U034 204 Dust boot installer 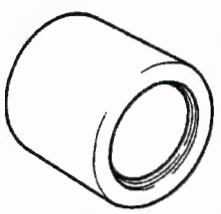	49 U027 005 Bearing installer 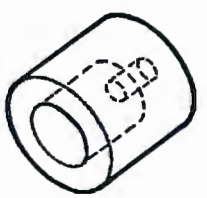
G026 103 Support block 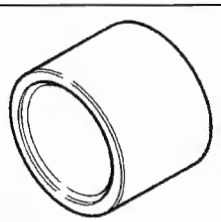	49 G033 102 Handle 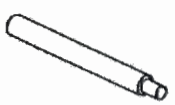	49 G033 106 Attachment 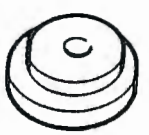
49 W034 308 Puller and installer 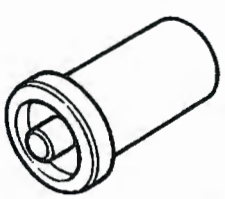	49 8038 785A Dust boot installer 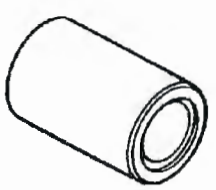	49 F032 321 Installer B 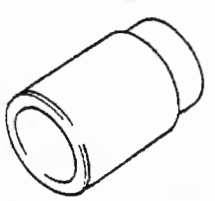
49 B034 202A Support block 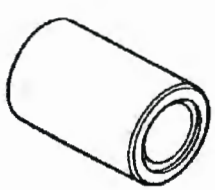	—	—

DRIVELINE/AXLE

03
SECTION

ON-BOARD DIAGNOSTIC 03-02
SYMPTOM
TROUBLESHOOTING 03-03
GENERAL PROCEDURES 03-10
FRONT AXLE 03-11
REAR AXLE 03-12
DRIVE SHAFT 03-13
DIFFERENTIAL 03-14
PROPELLER SHAFT 03-15
TRANSFER 03-16
ALL WHEEL DRIVE (AWD) . . . 03-19
TECHNICAL DATA 03-50
SERVICE TOOLS 03-60

03–02 ON-BOARD DIAGNOSTIC

ELECTRONIC AWD CONTROL SYSTEM WIRING DIAGRAM 03–02–1
ELECTRONIC AWD CONTROL SYSTEM ON-BOARD DIAGNOSIS 03–02–2
Reading DTCs Procedure 03–02–2
Clearing DTCs Procedures 03–02–2
DTC Table 03–02–2
DTC P1887 03–02–3
DTC P1888 03–02–5

ELECTRONIC AWD CONTROL SYSTEM WIRING DIAGRAM

E6U030227100W01

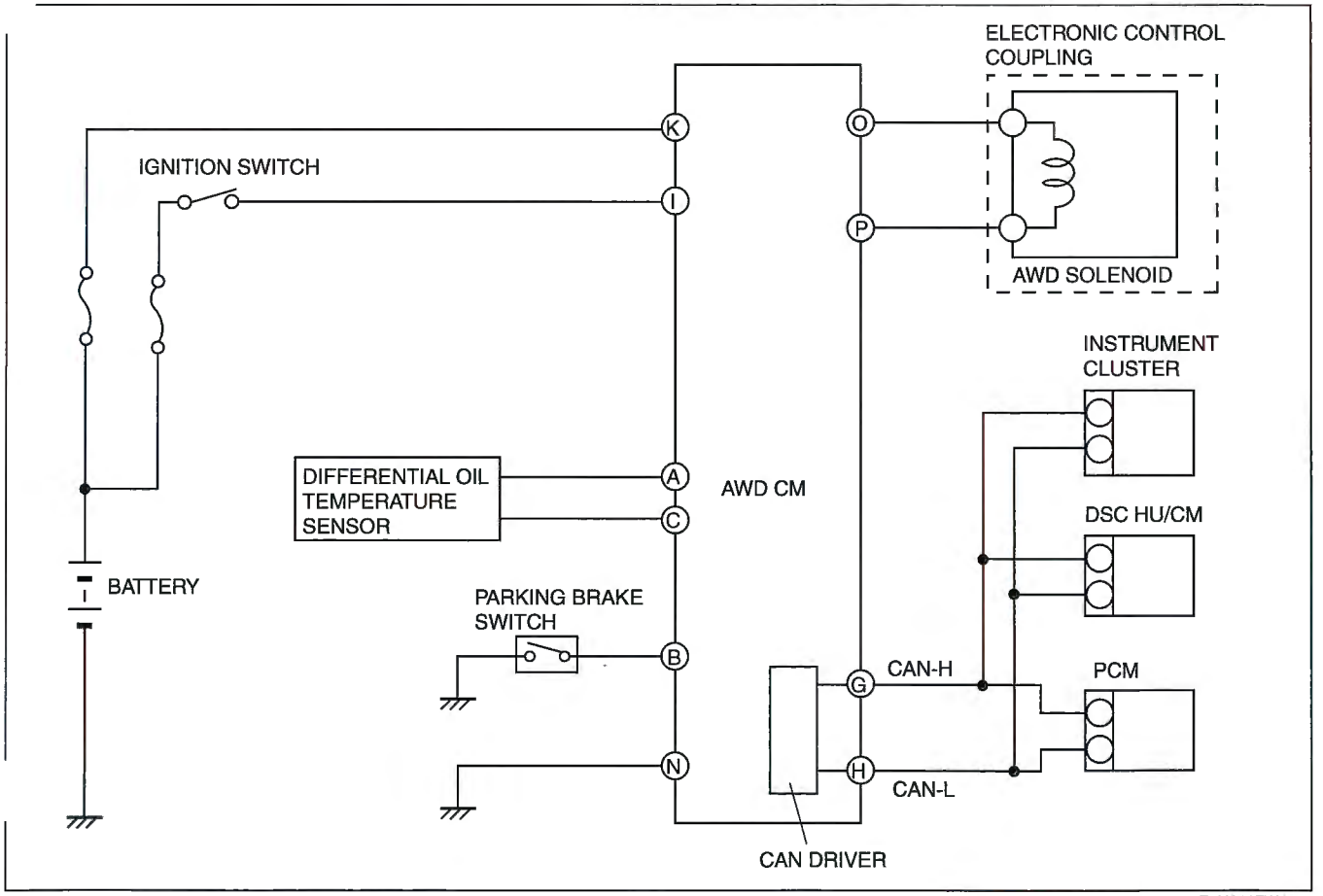

E6U302ZW7001

ELECTRONIC AWD CONTROL SYSTEM ON-BOARD DIAGNOSIS

E6U030227100W02

Reading DTCs Procedure

1. Connect WDS or equivalent to the vehicle DLC-2 16-pin connector.
2. Retrieve DTC by WDS or equivalent.
   - If a DTC is displayed, proceed with inspection steps for that DTC.
3. After repair, clear DTCs stored in the AWD CM by referring to the Clearing DTCs Procedure.

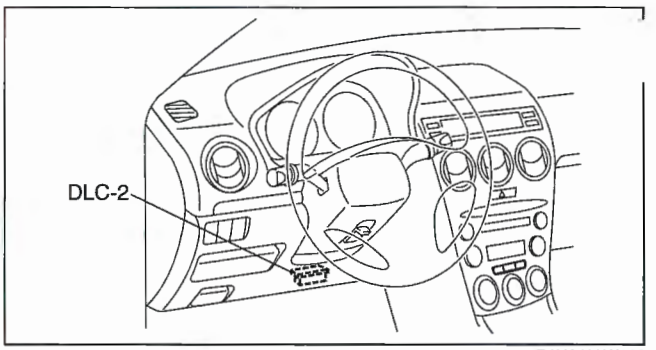

B6U0402W002

Clearing DTCs Procedures

1. Connect WDS or equivalent to the vehicle DLC-2 16-pin connector.
2. Clear DTCs by WDS or equivalent.
3. Turn the ignition key to OFF.
4. Perform the DTC inspection again, and verify that no DTC appears.
5. Disconnect the WDS or equivalent.

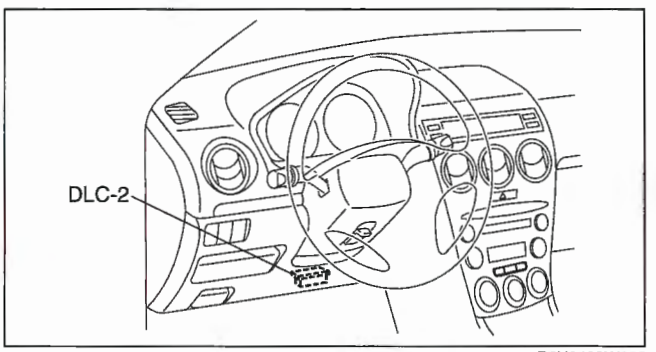

B6U0402W002

DTC Table

DTC WDS or equivalent	Diagnosis system component	Page
P1887	AWD solenoid circuit	(See 03–02–3 DTC P1887)
P1888	Differential oil temperature sensor circuit	(See 03–02–5 DTC P1888)
U0073	CAN system communication error	(See 09–02B–2 MULTIPLEX COMMUNICATION SYSTEM [L3 WITH TC])
U0100	Communication error to PCM	(See 09–02B–2 MULTIPLEX COMMUNICATION SYSTEM [L3 WITH TC])
U0121	Communication error to DSC HU/CM	(See 09–02B–2 MULTIPLEX COMMUNICATION SYSTEM [L3 WITH TC])

DTC P1887

E6U030227100W03

DTC P1887	AWD solenoid circuit
DETECTION CONDITION	• Current detection circuit in AWD CM detects current above specification for more than specified period. • AWD CM detects that AWD solenoid control signal differs from current detected at current detection circuit for more than specified period. • Relay voltage detection circuit detects that voltage does not concur with relay ON/OFF signal for more than specified period.
POSSIBLE CAUSE	• Open circuit or short to GND in harness between battery and AWD CM terminal K • Open circuit or short to GND between AWD CM terminal O and AWD solenoid terminal B • Open circuit or short to GND between AWD CM terminal P and AWD solenoid terminal A • Open circuit between AWD CM terminal N and body GND • Open or short circuit in AWD CM internal circuit • ENG+B (10A) fuse malfunction • AWD solenoid malfunction • AWD CM malfunction • Poor connection of connectors (female terminals)

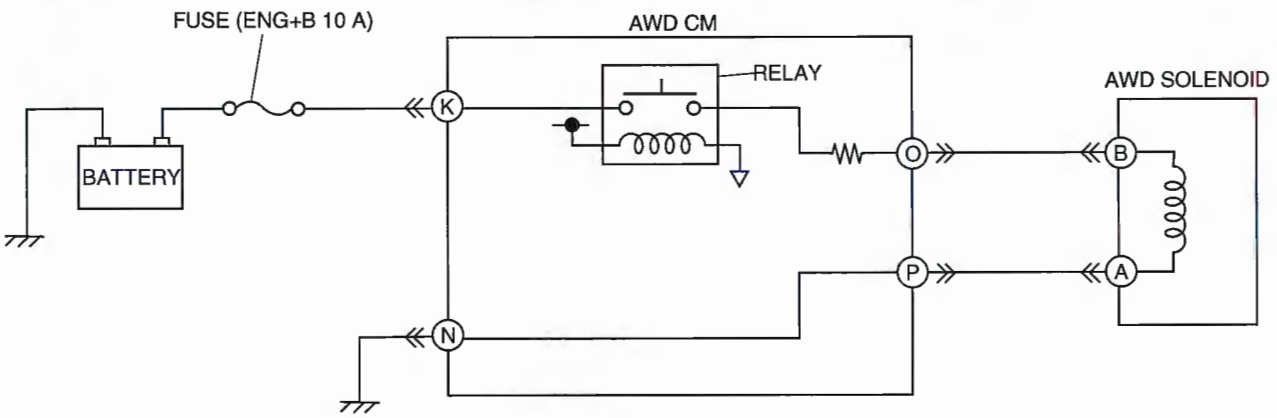

AWD CM CONNECTOR



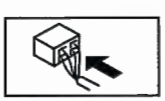

AWD SOLENOID CONNECTOR



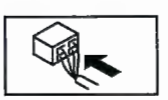

Diagnostic procedure

STEP	INSPECTION		ACTION
1	**INSPECT AWD SOLENOID CONDITION** • Turn ignition key to OFF. • Disconnect AWD solenoid connector. • Inspect AWD solenoid. (See 03–19–3 AWD SOLENOID INSPECTION) • Is it okay?	Yes	Go to next step.
		No	Replace AWD solenoid, then go to Step 7.
2	**INSPECT AWD SOLENOID TO AWD CM (POWER SUPPLY CIRCUIT) FOR OPEN CIRCUIT** • Disconnect AWD CM connector. • Inspect for continuity between AWD CM terminal O and AWD solenoid terminal B. • Is there continuity?	Yes	Go to next step.
		No	Repair or replace harness for open circuit between AWD CM and AWD solenoid, then go to Step 7.
3	**INSPECT AWD SOLENOID TO AWD CM (POWER SUPPLY CIRCUIT) FOR SHORT TO GROUND** • Inspect for continuity between AWD CM terminal O and ground. • Is there continuity?	Yes	Repair or replace harness for short to ground between AWD CM and AWD solenoid, then go to Step 7.
		No	Go to next step.
4	**INSPECT AWD SOLENOID TO AWD CM (GROUND CIRCUIT) FOR OPEN CIRCUIT** • Inspect for continuity between AWD CM terminal P and AWD solenoid terminal A. • Is there continuity?	Yes	Go to next step.
		No	Repair or replace harness for open circuit between AWD CM and AWD solenoid, then go to Step 7.
5	**INSPECT AWD SOLENOID TO AWD CM (GROUND CIRCUIT) FOR SHORT TO GROUND** • Inspect for continuity between AWD CM terminal P and ground. • Is there continuity?	Yes	Repair or replace harness for short to ground between AWD CM and AWD solenoid, then go to Step 7.
		No	Go to next step.
6	**INSPECT AWD CM POWER SUPPLY CIRCUIT FOR OPEN CIRCUIT** • Measure voltage between AWD CM terminal K and ground. • Is voltage B+?	Yes	Replace AWD CM, then go to Step 7.
		No	Repair or replace harness for open circuit between AWD CM and AWD solenoid, then go to next step.
7	**INSPECT FUSE CONDITION** • Turn ignition key to OFF. • Is ENG+B fuse (10A) okay?	Yes	Go to next step.
		No	Replace fuse, then go to Step 9.
8	**VERIFY TROUBLESHOOTING COMPLETED** • Make sure to reconnect all disconnected connectors. • Clear DTC from memory. (See 03–02–2 Clearing DTCs Procedures) • Drive vehicle. • Is the same DTC present?	Yes	Replace AWD CM, then go to next step.
		No	Go to next step.
9	**VERIFY AFTER REPAIR PROCEDURE** • Is there any other DTC present?	Yes	Go to applicable DTC inspection.
		No	Troubleshooting completed.

DTC P1888

E6U030227100W04

DTC P1888	Differential oil temperature sensor circuit
DETECTION CONDITION	• Differential oil temperature sensor voltage monitor circuit detects abnormal input voltage.
POSSIBLE CAUSE	• Open circuit, or short to battery or GND between AWD CM terminal A and differential oil temperature sensor terminal A • Open circuit or short to battery between AWD CM terminal C and differential oil temperature sensor terminal B • Differential oil temperature sensor malfunction • AWD CM malfunction • Poor connection of connectors (female terminals)

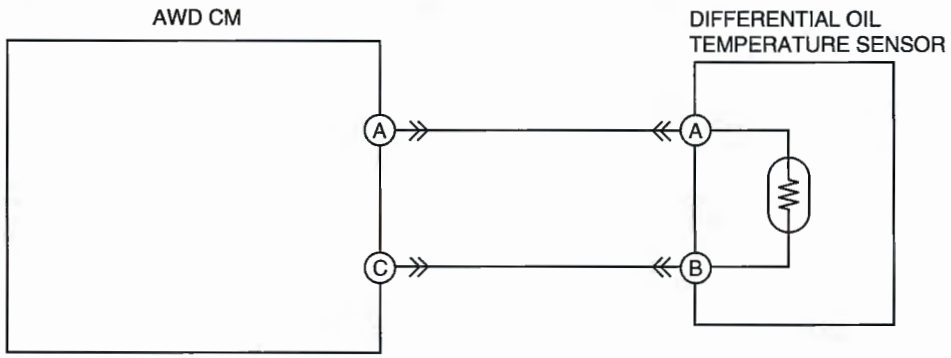



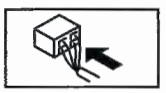



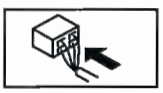

Diagnostic procedure

STEP	INSPECTION		ACTION
1	**INSPECT DIFFERENTIAL OIL TEMPERATURE SENSOR CONDITION** • Turn ignition key to OFF. • Disconnect differential oil temperature sensor connector. • Is it okay?	Yes	Go to next step.
		No	Replace differential oil temperature sensor, then go to Ste 7.
2	**INSPECT AWD CM TO DIFFERENTIAL OIL TEMPERATURE SENSOR FOR OPEN CIRCUIT** • Disconnect AWD CM connector. • Inspect for continuity between AWD CM terminal A and differential oil temperature sensor terminal A. • Is there continuity?	Yes	Go to next step.
		No	Repair or replace harness for open circuit between AWD CM and differential oil temperature sensor, then go to Step 7.
3	**INSPECT AWD CM TO DIFFERENTIAL OIL TEMPERATURE SENSOR FOR SHORT TO POWER** • Inspect voltage between AWD CM terminal A and ground. • Is voltage B+?	Yes	Repair or replace harness for short to power between AWD CM and differential oil temperature sensor, then go to Step 7.
		No	Go to next step.
4	**INSPECT AWD CM TO DIFFERENTIAL OIL TEMPERATURE SENSOR FOR SHORT TO GROUND** • Inspect for continuity between AWD CM terminal A and ground. • Is there continuity?	Yes	Repair or replace harness for short to ground between AWD CM and differential oil temperature sensor, then go to Step 7.
		No	Go to next step.
5	**INSPECT AWD CM TO DIFFERENTIAL OIL TEMPERATURE SENSOR FOR OPEN CIRCUIT** • Inspect for continuity between AWD CM terminal C and differential oil temperature sensor terminal B. • Is there continuity?	Yes	Go to next step.
		No	Repair or replace harness for open circuit between AWD CM and differential oil temperature sensor, then go to Step 7.
6	**INSPECT AWD CM TO DIFFERENTIAL OIL TEMPERATURE SENSOR FOR SHORT TO GROUND** • Inspect voltage between AWD CM terminal C and ground. • Is voltage B+?	Yes	Repair or replace harness for short to power between AWD CM and differential oil temperature sensor, then go to next step.
		No	Replace AWD CM, then go to next step.
7	**VERIFY TROUBLESHOOTING COMPLETED** • Make sure to reconnect all disconnected connectors. • Clear DTC from memory. (See 03–02–2 Clearing DTCs Procedures) • Drive vehicle. • Is the same DTC present?	Yes	Replace AWD CM, then go to next step.
		No	Go to next step.
8	**VERIFY AFTER REPAIR PROCEDURE** • Is there any other DTC present?	Yes	Go to applicable DTC inspection.
		No	Troubleshooting completed.

03–03 SYMPTOM TROUBLESHOOTING

ELECTRONIC AWD CONTROL
SYSTEM WIRING DIAGRAM 03–03–1
FOREWORD 03–03–2
SYMPTOM TROUBLESHOOTING 03–03–2
NO.1 FREQUENT FRONT
WHEEL SLIP 03–03–3
NO.2 TIGHT CORNER BRAKING 03–03–4
NO.3 ABNORMAL NOISE
AND/OR VIBRATION FROM COUPLING
COMPONENT 03–03–5

ELECTRONIC AWD CONTROL SYSTEM WIRING DIAGRAM

E6U030327100W02

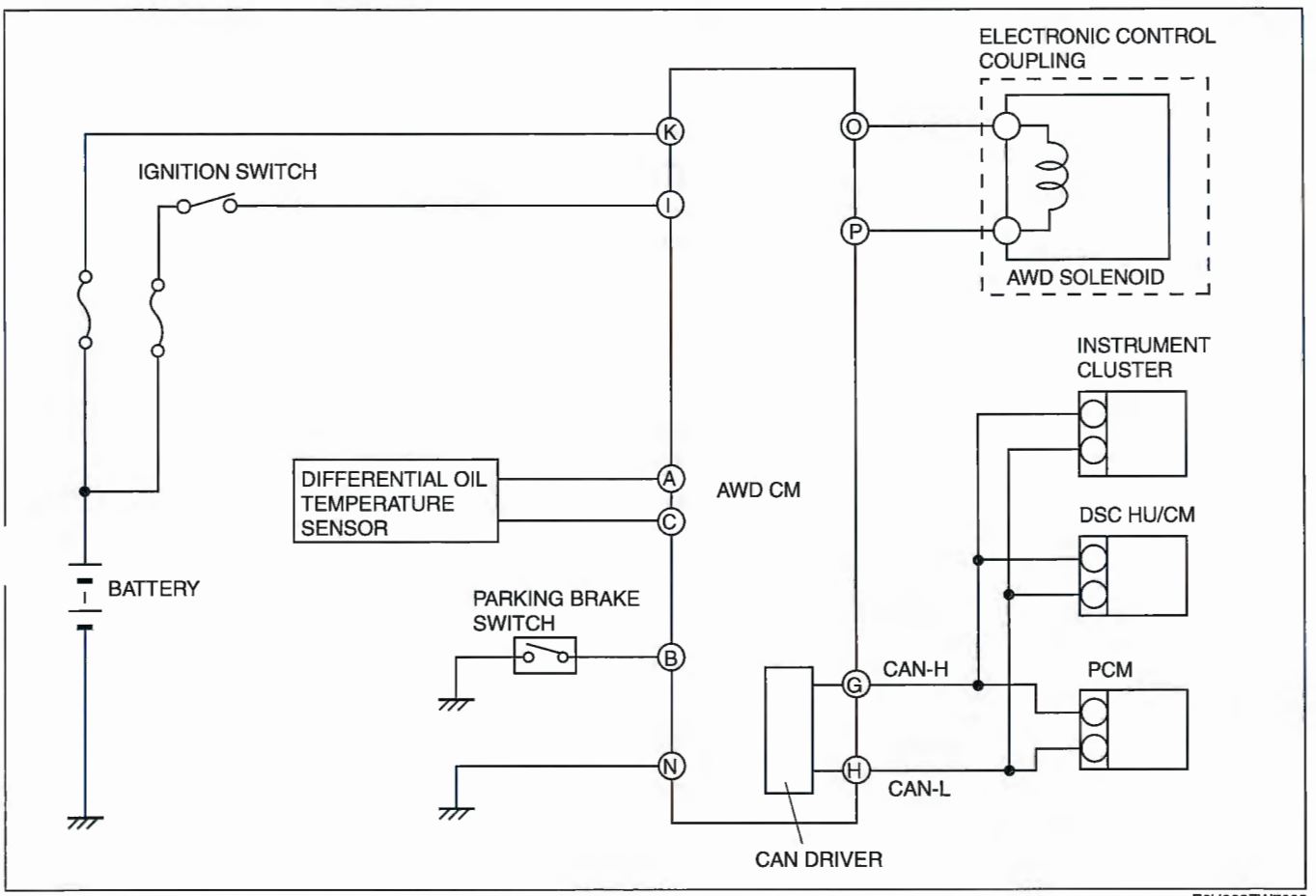

E6U302ZW7005

FOREWORD

E6U030327100W03

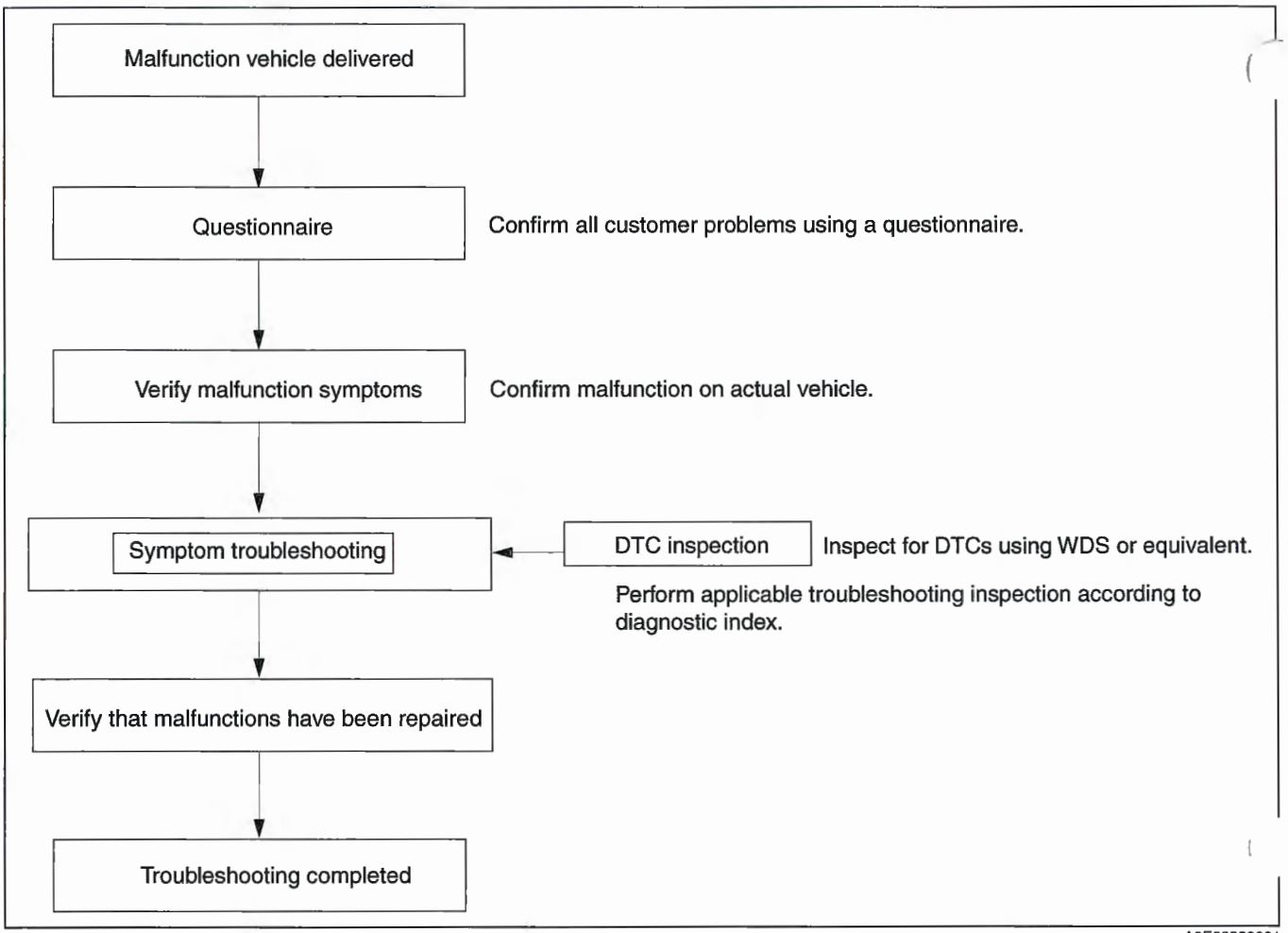

A6E63802001

SYMPTOM TROUBLESHOOTING

E6U030327100W04

- Verify the symptoms, and perform troubleshooting according to the appropriate number.

No.	Symptom	Description
1	Frequent front wheel slip	Front wheels slip frequently during acceleration on low-friction road.
2	Tight corner braking effect	Brakes seem to be applied during tight cornering while driving very slowly on paved road.
3	Abnormal noise and/or vibration from coupling unit	There is abnormal noise and/or vibration from coupling unit during driving.

NO.1 FREQUENT FRONT WHEEL SLIP

E6U030327100W05

1	Frequent front wheel slip

TROUBLESHOOTING HINTS]

Tire traction performance is extremely poor for given road friction. (AWD system is normal.)

- Improper wheel alignment (AWD system is normal.)
- Rear differential oil temperature is extremely high (Fail-safe condition)
- Differential oil temperature sensor malfunction (Fail-safe condition)
- Compare slip frequency with another vehicle of the same model (under the same road conditions and tire traction performance).
- Replace tires with others of the same model and perform test under the same road conditions to determine if the malfunction was caused by tire traction performance.
- Coupling component malfunction
- AWD solenoid malfunction

Warning

- **During simulation driving, vehicle stability may decrease extremely and cause an accident. Be sure to perform the simulation test driving in a safe area.**

Diagnostic procedure

STEP	INSPECTION		ACTION
1	**VERIFY DSC, PCM, AND AWD SYSTEM DTCs** • Verify DSC, PCM, and AWD system DTCs using WDS or equivalent. • Are there any DTCs present?	Yes	Go to applicable DTC inspection.
		No	Go to next step.
2	**VERIFY TIRE AIR PRESSURE** • Inspect tire air pressure. • Is it within specification?	Yes	Go to next step.
		No	Adjust tire air pressure, then go to next step.
3	**COMPARE WITH SAME MODEL TIRES** • Install tires of the same model. • Perform simulation driving. • Does malfunction recur?	Yes	Go to next step.
		No	AWD system is okay.
4	**COMPARE WITH SAME MODEL VEHICLE** • Install tires of malfunctioning vehicle to another same model vehicle. • Perform simulation driving. • Does malfunction recur?	Yes	AWD system is okay.
		No	Go to next step.
5	**INSPECT AWD SOLENOID** • Inspect AWD solenoid. (See 03–19–3 AWD SOLENOID INSPECTION) • Is coupling component solenoid okay?	Yes	Inspect harness between AWD solenoid and AWD CM, then go to next step.
		No	Replace coupling component. (See 03–19–5 COUPLING COMPONENT REMOVAL/INSTALLATION.)
6	**INSPECT WHEEL ALIGNMENT** • Inspect wheel alignment. • Is it okay?	Yes	Replace coupling component. (See 03–19–5 COUPLING COMPONENT REMOVAL/INSTALLATION.)
		No	Inspect wheel alignment, and adjust it if necessary.

NO.2 TIGHT CORNER BRAKING

E6U030327100W06

2	Tight corner braking

[TROUBLESHOOTING HINTS]

- **Because the coupling component locks up easily (similar to direct AWD), rotational difference between the front and rear wheels cannot be absorbed and brake-like phenomenon occurs.**
- **Due to the coupling component construction, slight tight corner braking effect occurs during tight cornering on a paved road. (AWD system is okay. Compare with another same model vehicle to determine malfunction.)**
- **Coupling component malfunction**
- **AWD solenoid malfunction**

Diagnostic procedure

STEP	INSPECTION		ACTION
1	**VERIFY DSC, PCM, AND AWD SYSTEM DTCS** • Verify DSC, PCM, and AWD system DTCs using WDS or equivalent. • Are there any DTCs present?	Yes	Go to applicable DTC inspection.
		No	Go to next step.
2	**VERIFY TIRE AIR PRESSURE** • Inspect tire air pressure. • Is it within specification?	Yes	Go to next step.
		No	Adjust tire air pressure, then go to next step.
3	**INSPECT ABS WHEEL-SPEED SENSOR** • Inspect ABS wheel-speed sensor. • Is it okay?	Yes	Go to next step.
		No	Repair or replace malfunctioning part.
4	**COMPARE WITH SAME MODEL VEHICLE** • Perform simulation driving with another same model vehicle. • Does malfunction recur on the same model vehicle?	Yes	AWD system is okay.
		No	Go to next step.
5	**PERFORM SIMULATION DRIVING WITH AWD SOLENOID CONNECTOR DISCONNECTED** • Turn ignition key OFF. • Disconnect AWD solenoid connector. • Perform simulation driving. (Clear DTC after simulation driving.) • Does malfunction recur?	Yes	Replace coupling component. (See 03–19–5 COUPLING COMPONENT REMOVAL/INSTALLATION.)
		No	Go to next step.
6	**INSPECT AWD SOLENOID** • Inspect AWD solenoid. (See 03–19–3 AWD SOLENOID INSPECTION) • Is it okay?	Yes	Inspect harness between AWD solenoid and AWD CM, then go to next step.
		No	Replace coupling component. (See 03–19–5 COUPLING COMPONENT REMOVAL/INSTALLATION.)

NO.3 ABNORMAL NOISE AND/OR VIBRATION FROM COUPLING COMPONENT

E6U030327100W07

3	Abnormal noise and/or vibration from coupling component

[TROUBLESHOOTING HINTS]

Abnormal noise and/or vibration from coupling component during driving

- Propeller shaft is malfunctioning or attached improperly.
- Engine mount or differential mount malfunction
- Resonance of rotating parts on vehicle (engine, propeller shaft, rear differential, tire, etc.)
- Resonance with engine vibration (mainly with exhaust system parts)
- Rear differential malfunction
- Coupling component malfunction

Diagnostic procedure

STEP	INSPECTION		ACTION
1	**VERIFY DSC, PCM, AND AWD SYSTEM DTCS** • Verify DSC, PCM, and AWD system DTCs using WDS or equivalent. • Are there any DTCs present?	Yes	Go to applicable DTC inspection.
		No	Go to next step.
2	**VERIFY INSTALLATION CONDITION OF VEHICLE PARTS** • Verify installation condition for following: — Propeller shaft (including bending and joint operation) — Center bearing — Engine mount — Differential mount — Hub bearing — Exhaust system parts — ABS wheel-speed sensor • Are they properly installed?	Yes	Go to next step.
		No	Repair or replace malfunctioning part.
3	**DETERMINE IF MALFUNCTION IS CAUSED BY REAR DIFFERENTIAL** • Install tires of another brand. **Note** • When tires of another brand are installed, the same malfunction can occur due to conditions different from customer explanation. Be careful not to confuse it with customer complaint. • Perform simulation driving at the same engine speed, gear position, and vehicle speed that customer vehicle had malfunction. • Does the same malfunction occur?	Yes	Reinstall customer's vehicle tire. Go to next step.
		No	AWD system is okay. Reinstall customer's vehicle tire.
4	**INSPECT REAR DIFFERENTIAL** • Inspect rear differential for following: — Backlash — Teeth contact (See 03–14–10 REAR DIFFERENTIAL ASSEMBLY) • Are they okay?	Yes	Replace coupling component.
		No	Inspect malfunctioning part and adjust it if necessary.

03–10 GENERAL PROCEDURES

PRECAUTION
FRONT AND REAR AXLE) 03–10–1
Wheel and Tire
Removal/Installation..... 03–10–1
Brake Line
Disconnection/Connection 03–10–1
Suspension Arm
Removal/Installation 03–10–1

PRECAUTION (FRONT AND REAR AXLE)

E6U031000000W01

Wheel and Tire Removal/Installation

1. The removal and installation procedures for the wheels and tires are not mentioned in this section. When a wheel is removed, tighten it to **88—118 N·m {9.0—12.0 kgf·m, 65.0—87.0 ft·lbf}**

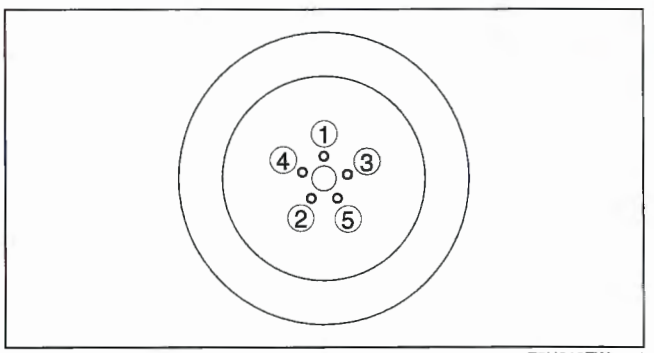

E5U610ZW5001

Brake Line Disconnection/Connection

Caution
- **Brake fluid will damage painted surfaces. If brake fluid gets on a painted surface, wipe it off immediately.**

Tighten the brake pipe flare nut using the **SST** (49 0259 770B). Be sure to modify the brake pipe flare nut tightening torque to allow for use of a torque wrench-**SST** combination. (See 00–00–17 Torque Formulas.)

2. If any brake line has been disconnected any time during the procedure, add brake fluid, bleed the brakes, and inspect for leakage after the procedure has been completed.

Suspension Arm Removal/Installation

1. Tighten any part of the suspension that uses rubber bushings only after vehicle has been lowered to the ground and unloaded.

Note
- Unloaded: Fuel tank is full. Engine coolant and engine oil are at specified level. Spare tire, jack, and tools are in designated position.

03–11 FRONT AXLE

FRONT AXLE LOCATION INDEX..... 03–11–1
WHEEL HUB, STEERING KNUCKLE PRE-INSPECTION 03–11–1
Wheel Bearing Play Inspection 03–11–1
WHEEL HUB BOLT REPLACEMENT... 03–11–2
WHEEL HUB, STEERING KNUCKLE REMOVAL/INSTALLATION..... 03–11–3
Locknut Removal Note..... 03–11–4
Wheel Hub Component Removal Note 03–11–4
Wheel Bearing Removal Note.....03–11–4
Dust Cover Removal Note.....03–11–5
Hub Bolt Removal Note.....03–11–5
Hub Bolt Installation Note 03–11–6
Dust Cover Installation Note 03–11–6
Wheel Bearing Installation Note 03–11–6
Wheel Hub Component Installation Note 03–11–7
Locknut Installation Note.....03–11–7

FRONT AXLE LOCATION INDEX

E6U031104000W01

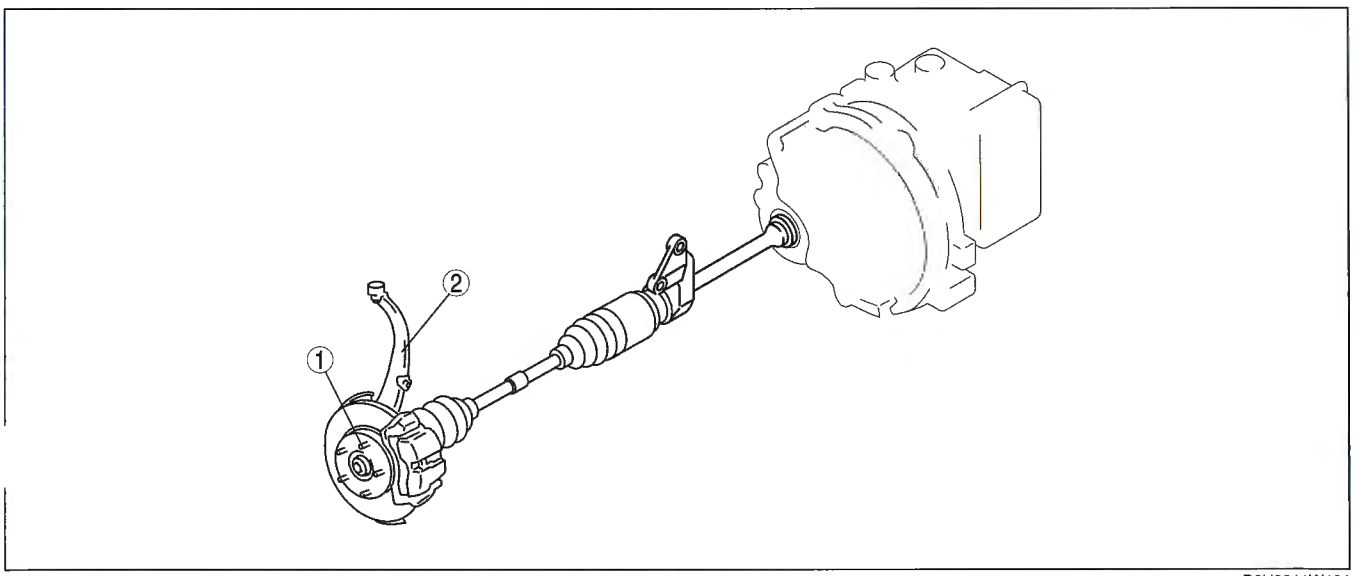

B6U0311W101

1	Hub bolt (See 03–11–2 WHEEL HUB BOLT REPLACEMENT.)

2	Wheel hub, steering knuckle (See 03–11–1 WHEEL HUB, STEERING KNUCKLE PRE-INSPECTION.) (See 03–11–3 WHEEL HUB, STEERING KNUCKLE REMOVAL/INSTALLATION.)

WHEEL HUB, STEERING KNUCKLE PRE-INSPECTION

E6U031104000W02

Wheel Bearing Play Inspection

1. Position a dial indicator against the wheel hub.
2. Push and pull the wheel hub by hand in the axial direction and measure the wheel bearing play.

   Maximum front wheel bearing play
   0.05 mm {0.002 in}

3. If the bearing play exceeds the specification, replace and tighten the locknut to the specified torque and retest.
   - Replace the wheel bearing as necessary.

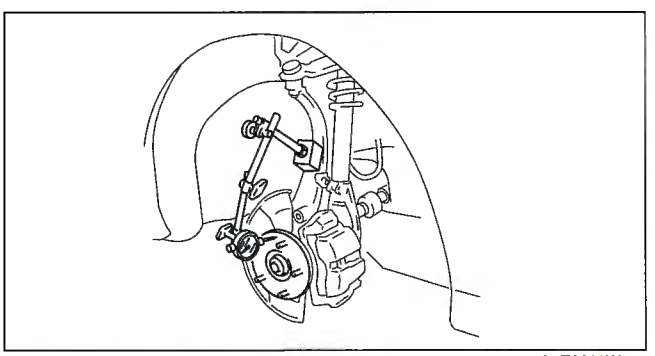

A6E0311W010

WHEEL HUB BOLT REPLACEMENT

1. Remove the hub bolt using the **SSTs**.

   Note
   - If the dust cover interferes with the wheel hub bolt and the wheel hub bolt cannot be removed, tap the part shown in the figure with a chisel lightly and bend the processing point back to the steering knuckle side.

2. Install the hub bolt into the wheel hub and install a washer and hub nut on the hub bolt.

3. Tighten the hub nut while holding the wheel hub using a brass bar.

E6U031133060W01

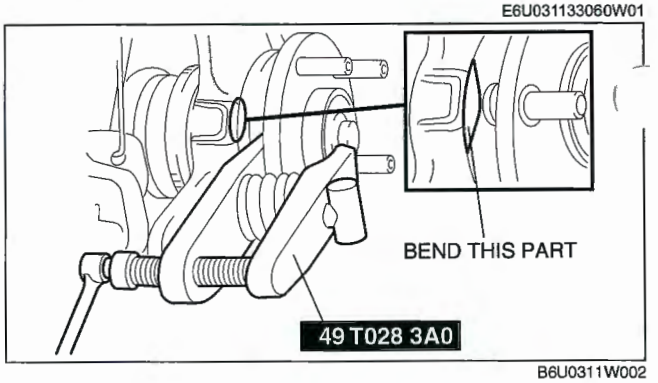

B6U0311W002

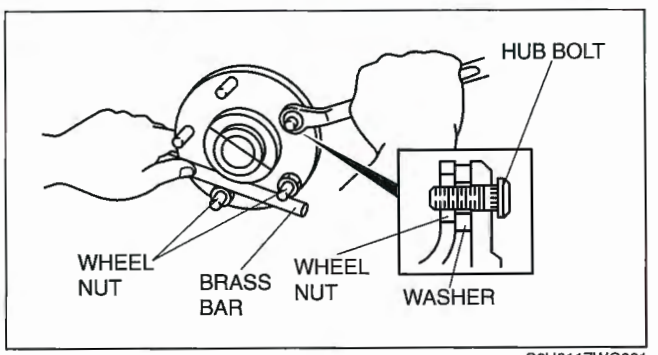

C6U311ZWC001

WHEEL HUB, STEERING KNUCKLE REMOVAL/INSTALLATION

E6U031104000W03

Caution

- **Performing the following procedures without first removing the ABS wheel-speed sensor may possibly cause an open circuit in the harness if it is pulled by mistake. Before performing the following procedures, remove the ABS wheel-speed sensor (axle side) and fix it to an appropriate place where the sensor will not be pulled by mistake while the vehicle is being serviced.**

1. Remove in the order indicated in the table.
2. Install in the reverse order of removal.
3. After installation, inspect the front wheel alignment. (See 02–11–2 FRONT WHEEL ALIGNMENT.)

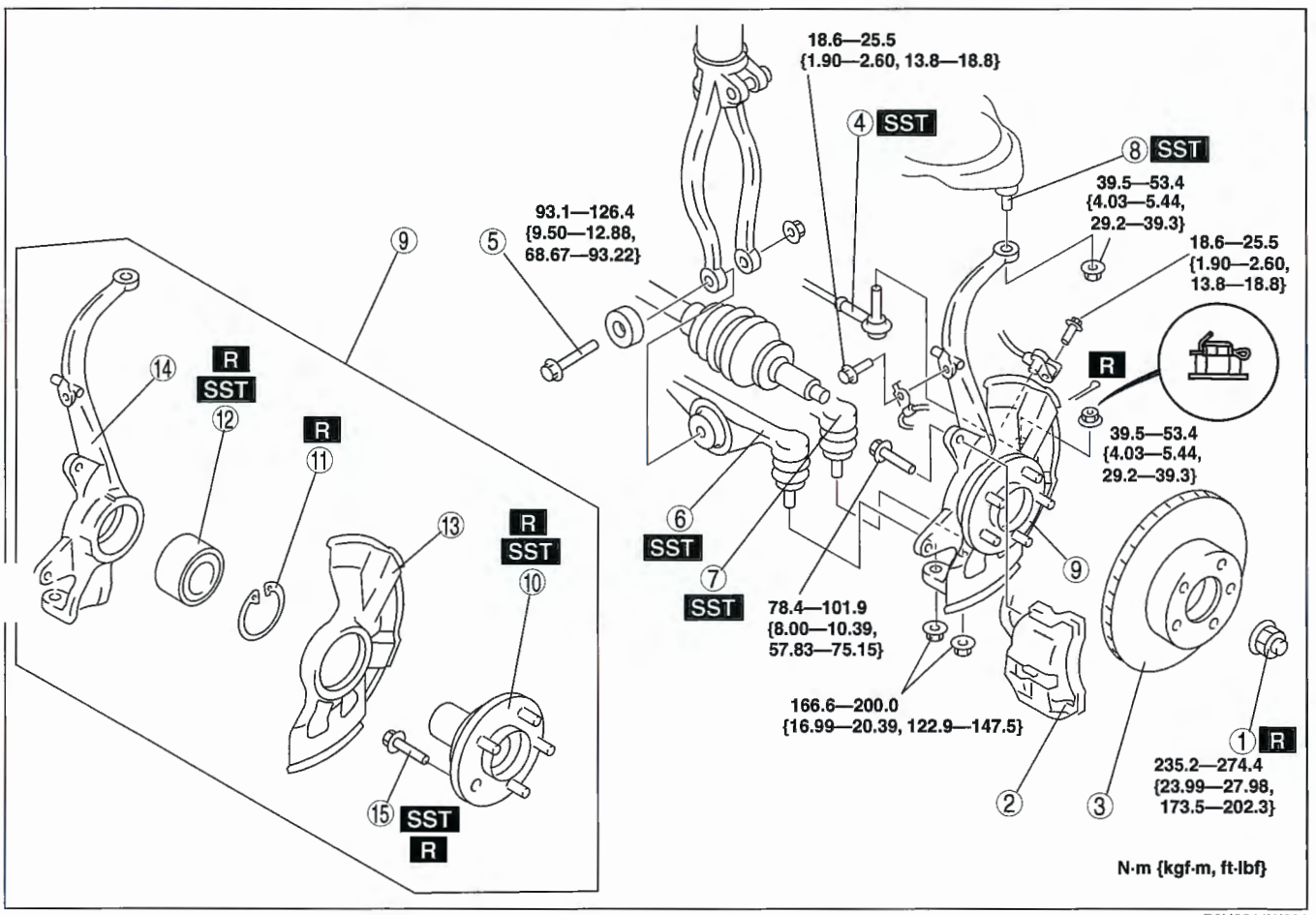

B6U0311W001

1	Locknut (See 03–11–4 Locknut Removal Note.) (See 03–11–7 Locknut Installation Note.)
2	Brake caliper component
3	Disc plate
4	Tie-rod end ball joint (See 06–12–12 Tie-rod End Ball Joint Removal Note.)
5	Bolt
6	Front lower arm (front) ball joint (See 02–13–11 Front Lower Arm (Front) Ball Joint Removal Note.)
7	Front lower arm (rear) ball joint (See 02–13–11 Front Lower Arm (Front) Ball Joint Removal Note.)
8	Front upper arm ball joint (See 02–13–9 Front Upper Arm Ball Joint Removal Note.)

9	Wheel hub, steering knuckle, dust cover
10	Wheel hub component (See 03–11–4 Wheel Hub Component Removal Note.) (See 03–11–7 Wheel Hub Component Installation Note.)
11	Retaining ring
12	Wheel bearing (See 03–11–4 Wheel Bearing Removal Note.) (See 03–11–6 Wheel Bearing Installation Note.)
13	Dust cover (See 03–11–5 Dust Cover Removal Note.) (See 03–11–6 Dust Cover Installation Note.)
14	Steering knuckle
15	Hub bolt (See 03–11–5 Hub Bolt Removal Note.) (See 03–11–6 Hub Bolt Installation Note.)

Locknut Removal Note

1. Knock the crimped portion of the locknut outward using a small chisel and a hammer.
2. Lock the hub by applying the brakes.
3. Remove the locknut.

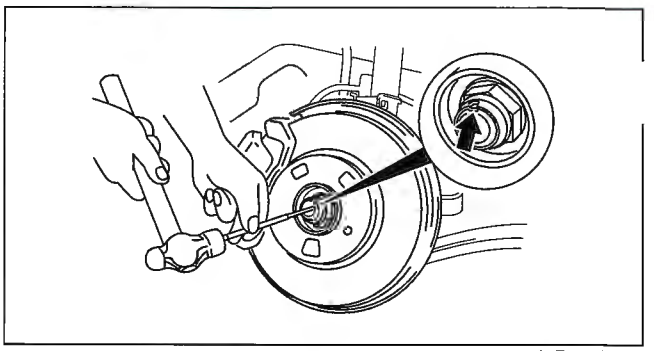

A6E6321W001

Wheel Hub Component Removal Note

1. Remove the wheel hub component using the **SSTs**.

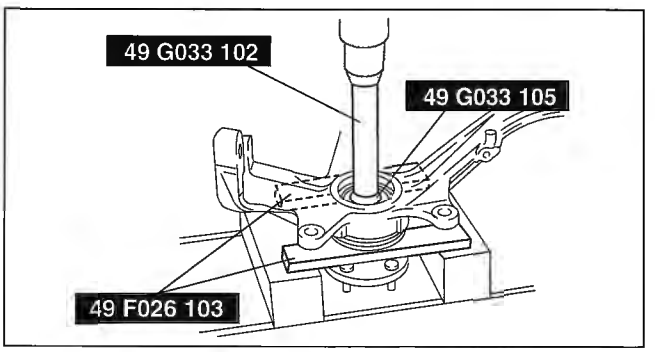

A6E0311W015

2. If the bearing inner race remains on the front wheel hub component, grind a section of the bearing inner race until **approx. 0.5 mm {0.02 in}** remains. Then remove it using a chisel.

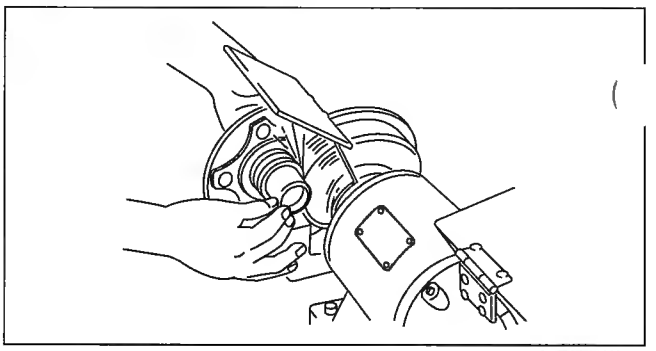

A6E6312W002

Wheel Bearing Removal Note

1. Remove the wheel bearing using the **SSTs**.

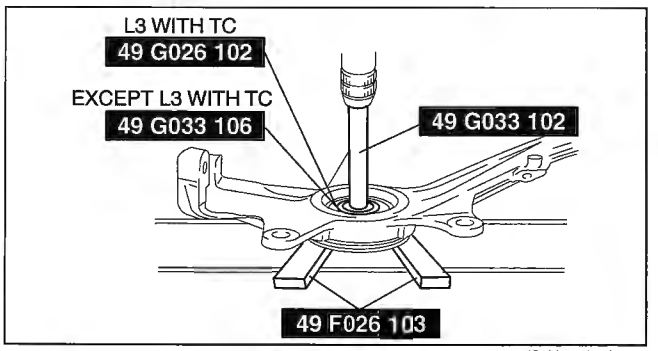

E6U311ZW7001

Dust Cover Removal Note

Note
- The dust cover does not need to be removed unless it is being replaced.

1. Mark the dust cover and steering knuckle for proper installation.

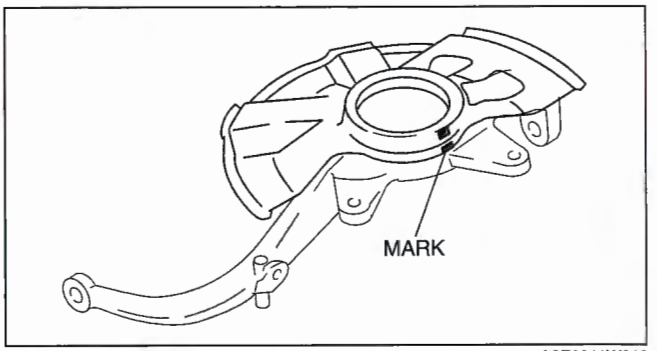

A6E0311W018

2. Remove the dust cover using a chisel.

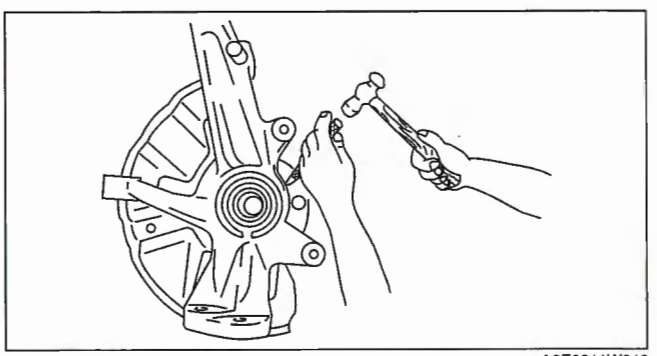
A6E0311W019

,b Bolt Removal Note

Note
- The hub bolts do not need to be removed unless they are being replaced.

1. Remove the hub bolts using a press.

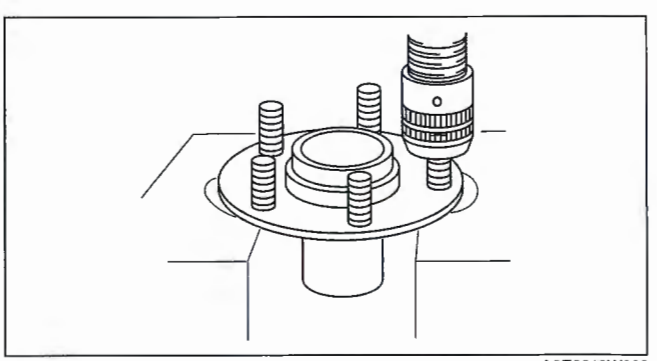
A6E6312W003

Hub Bolt Installation Note

1. Install the new hub bolts using a press.

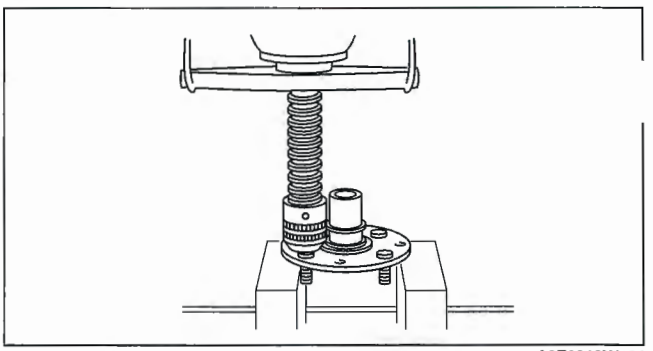

A6E6312W004

Dust Cover Installation Note

1. Mark the new dust cover in the same way as the removed one.
2. Align the marks of the new dust cover and the knuckle.

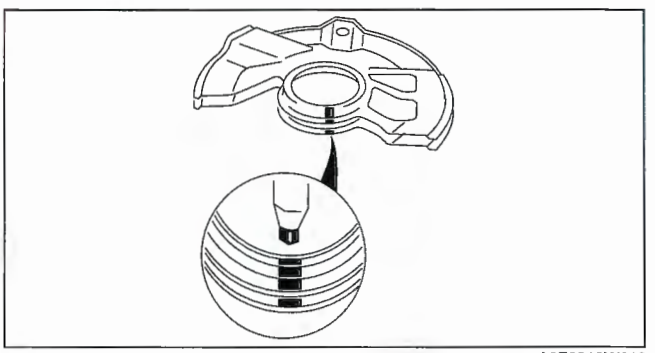

A6E0312W010

3. Install the new dust cover using the **SSTs**.

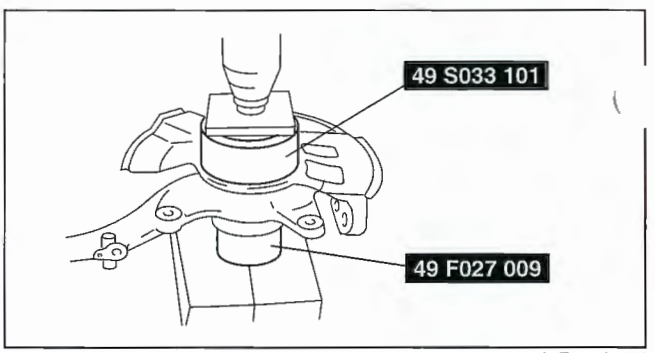

A6E0312W011

Wheel Bearing Installation Note

1. Install the new wheel bearing using the **SSTs**.

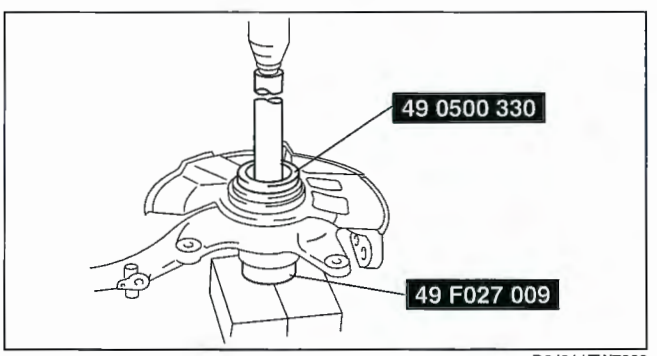

D6J311ZW7002

Wheel Hub Component Installation Note

1. Install the wheel hub component using the **SSTs**.

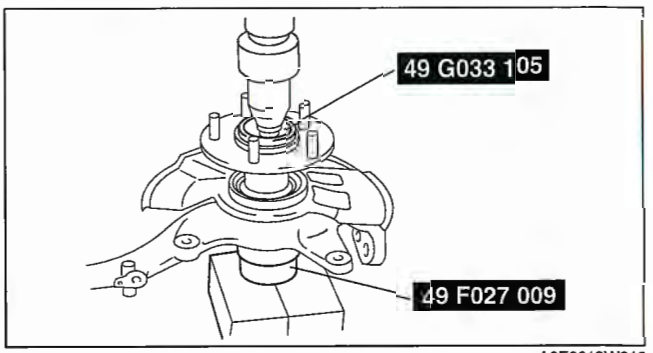

A6E0312W013

Locknut Installation Note

1. Install a new locknut and stake it as shown.

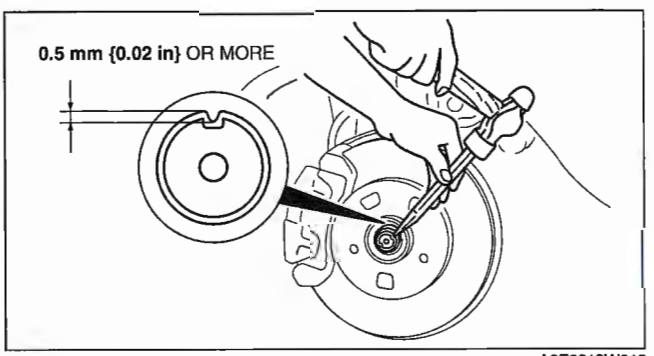

A6E0312W015

03–12 REAR AXLE

REAR AXLE LOCATION INDEX..... 03–12–1
WHEEL HUB, HUB SPINDLE PRE-INSPECTION 03–12–1
Wheel Bearing Play Inspection **03–12–1**
WHEEL HUB BOLT REPLACEMENT [AWD] 03–12–2
WHEEL HUB, HUB SPINDLE REMOVAL/INSTALLATION..... 03–12–2
Locknut Removal Note..... **03–12–3**
ABS Sensor Rotor Removal Note **03–12–3**
ABS Sensor Rotor Installation Note..... **03–12–4**
Locknut Installation Note **03–12–4**
WHEEL HUB, KNUCKLE REMOVAL/INSTALLATION [AWD].... 03–12–5
Locknut Removal Note..... **03–12–6**
Bolt (Rear Lower Arm (Outer)) Removal Note **03–12–6**
Bolt (Shock Absorber (Lower)) Removal Note **03–12–6**
Bolt (Lateral Link (Outer)) Removal Note **03–12–7**
Bolt (Trailing Link (Front)) Removal Note **03–12–7**
Wheel Hub Removal Note.....**03–12–7**
Wheel Bearing Removal Note.....**03–12–8**
Dust Cover Removal Note.....**03–12–8**
Wheel Hub Bolt Removal Note **03–12–8**
Wheel Hub Bolt Installation Note **03–12–9**
Dust Cover Installation Note **03–12–9**
Wheel Bearing Installation Note **03–12–9**
Wheel Hub Installation Note **03–12–10**
Bolt (Trailing Link (Front)) Installation Note **03–12–10**
Rear Coil Spring Installation Note.....**03–12–10**
Locknut Installation Note.....**03–12–10**

REAR AXLE LOCATION INDEX

E6U031205000W01

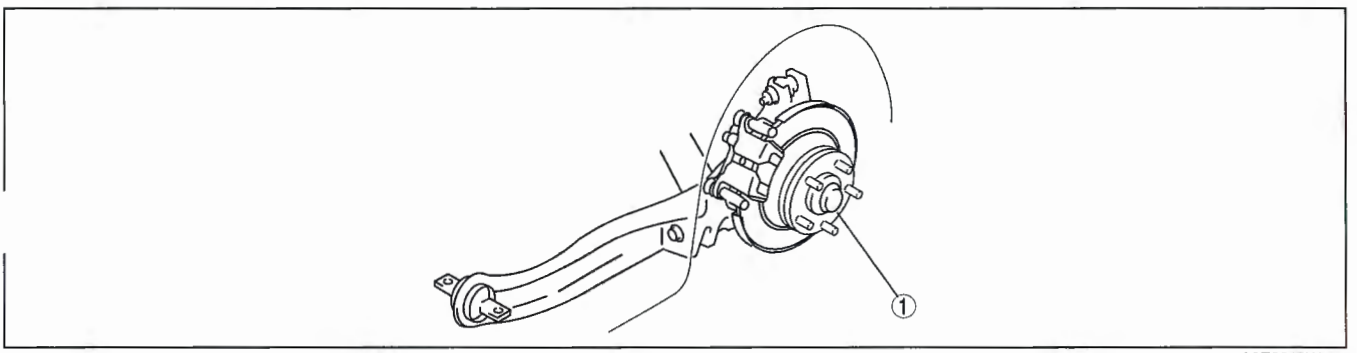

A6E0312W016

1	Wheel hub, hub spindle (2WD)/knuckle (AWD) (See 03–12–1 WHEEL HUB, HUB SPINDLE PRE-INSPECTION.) (See 03–12–2 WHEEL HUB BOLT REPLACEMENT [AWD]) (See 03–12–2 WHEEL HUB, HUB SPINDLE REMOVAL/INSTALLATION.) (See 03–12–5 WHEEL HUB, KNUCKLE REMOVAL/INSTALLATION [AWD])

WHEEL HUB, HUB SPINDLE PRE-INSPECTION

E6U031205000W02

Wheel Bearing Play Inspection

1. Position a dial indicator against the wheel hub.
2. Push and pull the wheel hub by hand in the axial direction and measure the wheel bearing play.

   Maximum rear wheel bearing play
   0.05 mm {0.002 in}

3. If the bearing play exceeds the specification, replace and tighten the locknut to the specified torque and retest.
   - Replace the wheel hub component as necessary.

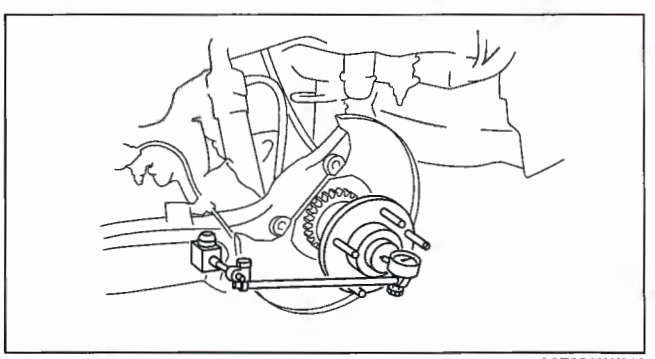

A6E0312W019

WHEEL HUB BOLT REPLACEMENT [AWD]

E6U031205000W04

1. Remove the brake caliper component and the disc plate.
2. Remove the wheel hub bolt using the **SST** as shown in the figure.

Note
- If the dust cover interferes with the wheel hub bolt and the wheel hub bolt cannot be removed, tap the part shown in the figure with a chisel lightly and bend the process back to the knuckle side.

3. Install a new wheel hub bolt into the wheel hub and install a washer and hub nut on the hub bolt.
4. Tighten the hub nut while holding the wheel hub using a brass bar.

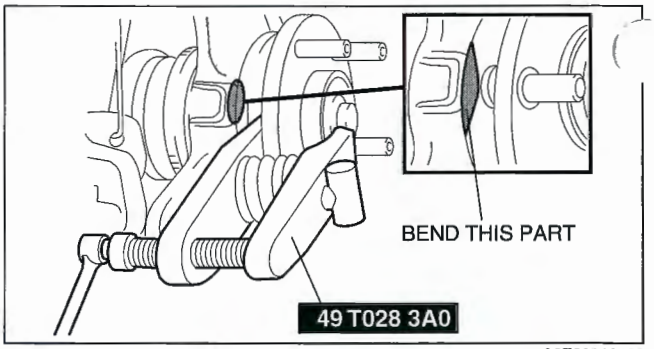

A6E03112001

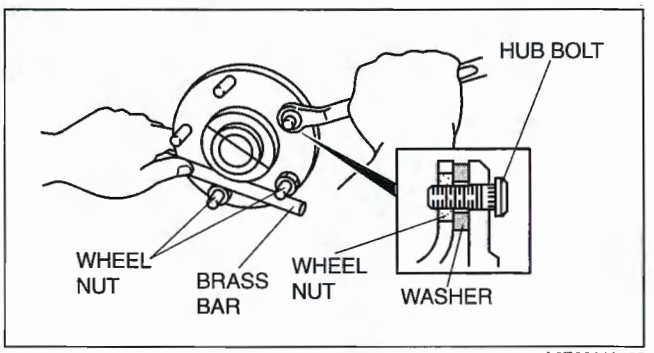

A6E03112002

WHEEL HUB, HUB SPINDLE REMOVAL/INSTALLATION

E6U031205000W03

Caution
- **Performing the following procedures without first removing the ABS wheel-speed sensor may possibly cause an open circuit in the harness if it is pulled by mistake. Before performing the following procedures, remove the ABS wheel-speed sensor (axle side) and fix it to an appropriate place where the sensor will not be pulled by mistake while the vehicle is being serviced.**

1. Remove in the order indicated in the table.
2. Install in the reverse order of removal.

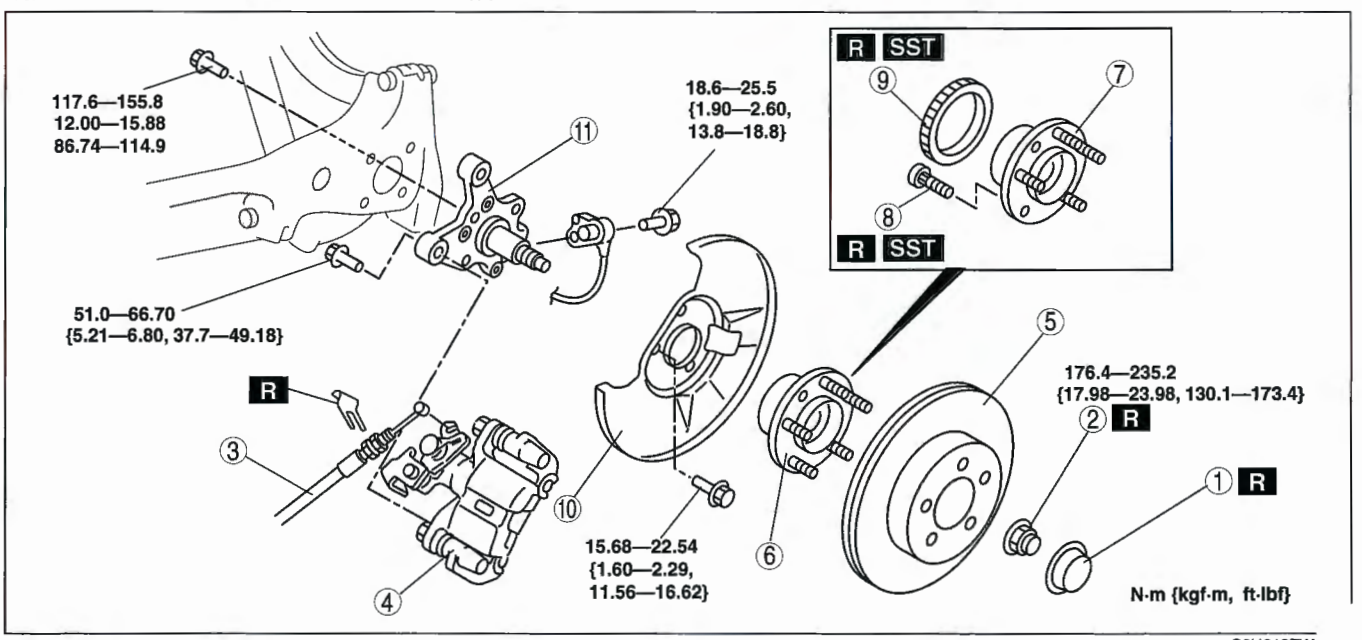

C6U312ZW(

1	Hub cap

2	Locknut (See 03–12–3 Locknut Removal Note.) (See 03–12–4 Locknut Installation Note.)

3	Parking brake cable
4	Brake caliper component
5	Disc plate
6	Wheel hub component
7	Wheel hub
8	Hub bolt (See 03–11–5 Hub Bolt Removal Note.) (See 03–11–6 Hub Bolt Installation Note.)
9	ABS sensor rotor (with ABS) (See 03–12–3 ABS Sensor Rotor Removal Note.) (See 03–12–4 ABS Sensor Rotor Installation Note.)
10	Dust cover
11	Hub spindle

Locknut Removal Note

1. Knock the crimped portion of the locknut outward using a small cape chisel and a hammer.
2. Lock the hub by applying the brakes.
3. Remove the locknut.

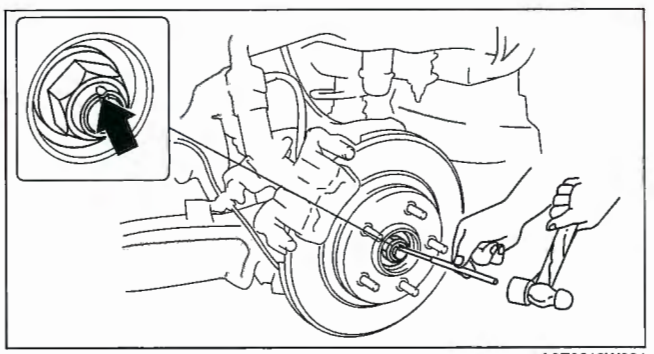

A6E0312W021

ABS Sensor Rotor Removal Note

Note

- The sensor rotor does not need to be removed unless it is being replaced.

1. Remove the sensor rotor using a chisel.

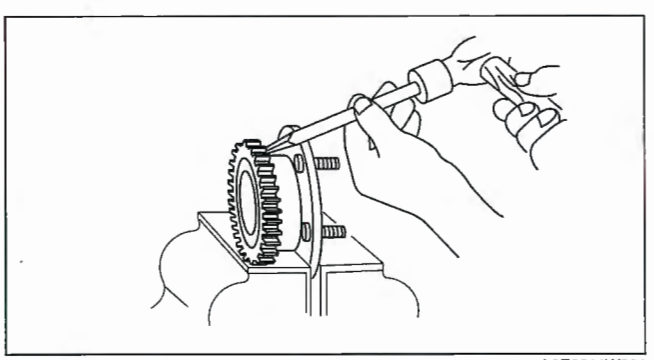

A6E6314W001

ABS Sensor Rotor Installation Note

1. Set the **SST** as shown in the figure.

Caution

- **Position the SST so that marking B faces the bottom.**

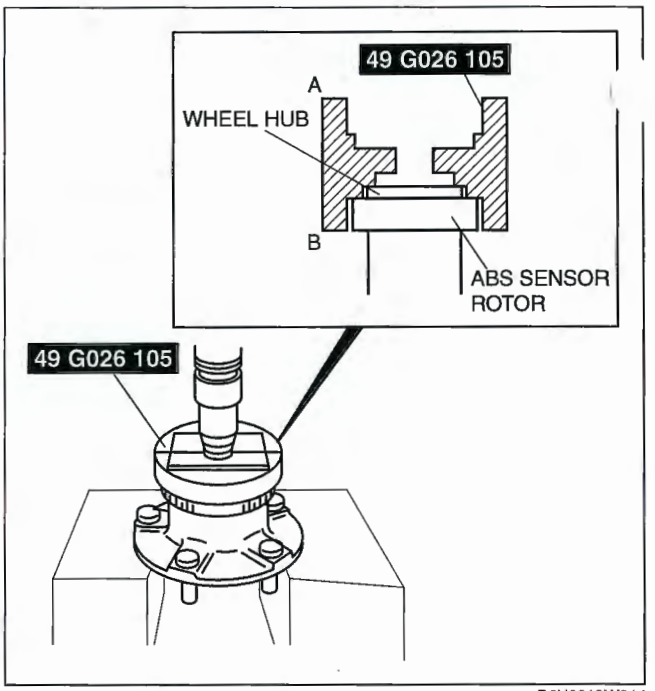

B6U0313W014

2. Press on the new sensor rotor using the **SST** and a press.

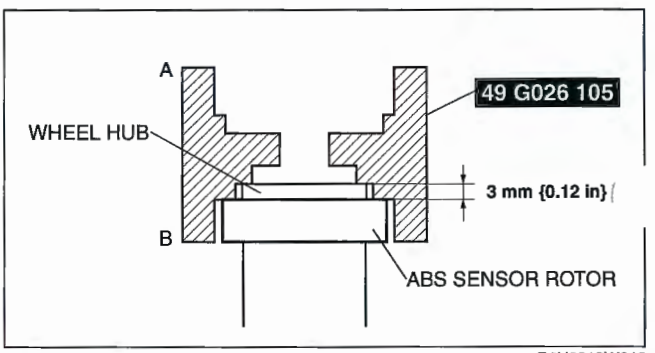

B6U0313W013

Locknut Installation Note

1. Install a new locknut and stake it as shown.

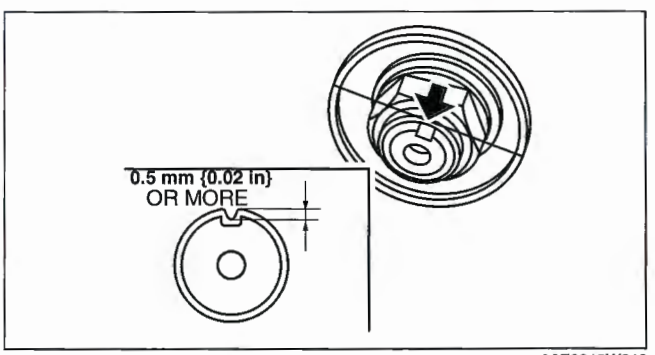

A6E0313W013

WHEEL HUB, KNUCKLE REMOVAL/INSTALLATION [AWD]

E6U031205000W05

Caution

- **Performing the following procedures without first removing the ABS wheel-speed sensor may possibly cause an open circuit in the harness if it is pulled by mistake. Before performing the following procedures, remove the ABS wheel-speed sensor (wheel side) and fix it to an appropriate place where the sensor will not be pulled by mistake while the vehicle is being serviced.**

1. Remove in the order indicated in the table.
2. Install in the reverse order of removal.

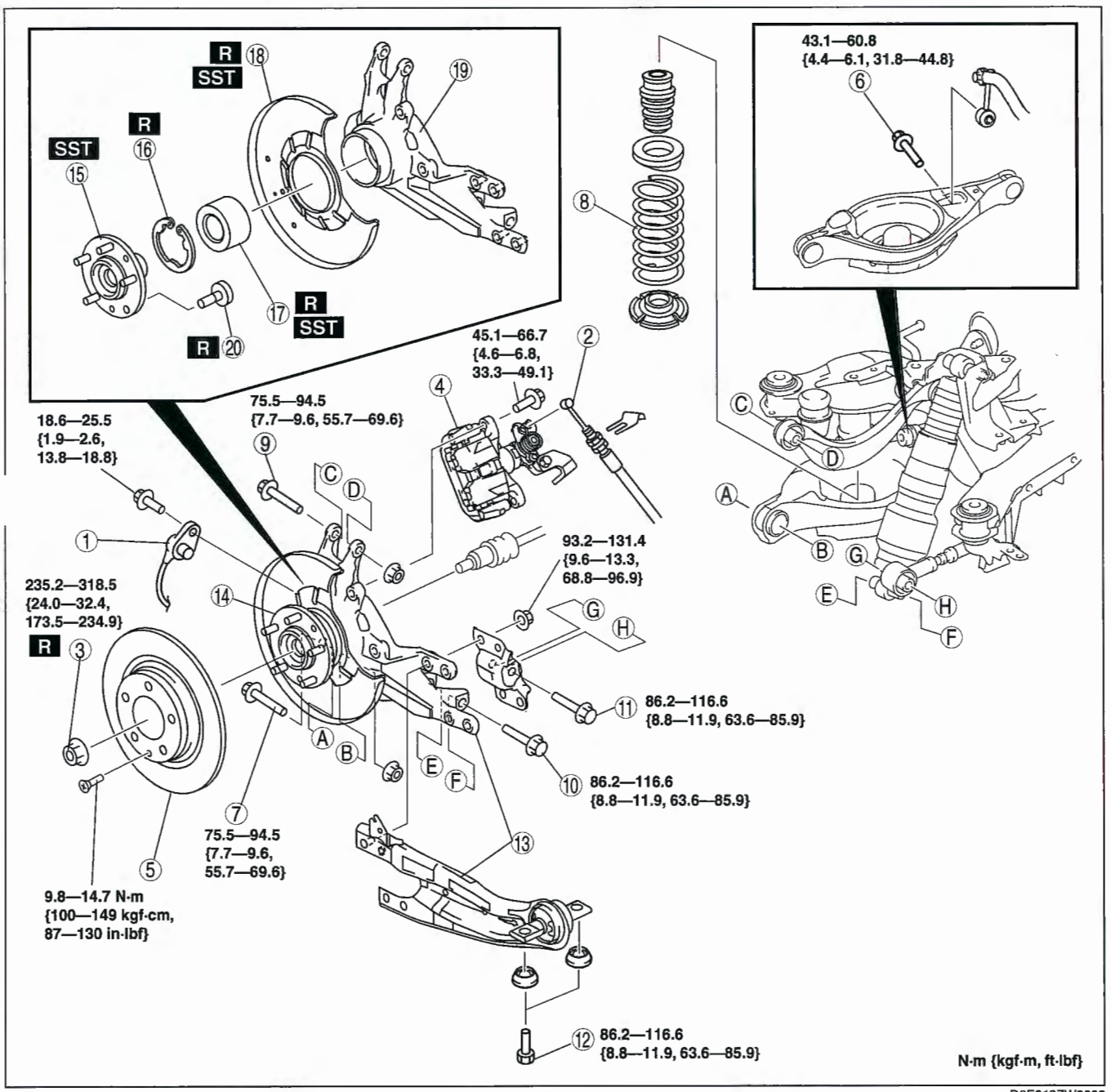

D6E312ZW3002

1	ABS wheel-speed sensor
2	Parking brake cable
3	Locknut (See 03–12–6 Locknut Removal Note) (See 03–12–10 Locknut Installation Note)
4	Brake caliper component

5	Disc plate
6	Bolt (stabilizer control link (lower))
7	Bolt (rear lower arm (outer)) (See 03–12–6 Bolt (Rear Lower Arm (Outer)) Removal Note

8	Rear coil spring (See 03–12–10 Rear Coil Spring Installation Note)
9	Bolt (rear upper arm (outer))
10	Bolt (shock absorber (lower)) (See 03–12–6 Bolt (Shock Absorber (Lower)) Removal Note)
11	Bolt (lateral link (outer)) (See 03–12–7 Bolt (Lateral Link (Outer)) Removal Note)
12	Bolt (trailing link (front)) (See 03–12–7 Bolt (Trailing Link (Front)) Removal Note) (See 03–12–10 Bolt (Trailing Link (Front)) Installation Note)
13	Trailing link, knuckle component
14	Wheel hub, knuckle component
15	Wheel hub (See 03–12–7 Wheel Hub Removal Note) (See 03–12–10 Wheel Hub Installation Note)
16	Snap ring
17	Wheel bearing (See 03–12–8 Wheel Bearing Removal Note) (See 03–12–9 Wheel Bearing Installation Note)
18	Dust cover (See 03–12–8 Dust Cover Removal Note) (See 03–12–9 Dust Cover Installation Note)
19	Knuckle
20	Wheel hub bolt (See 03–12–8 Wheel Hub Bolt Removal Note) (See 03–12–9 Wheel Hub Bolt Installation Note)

Locknut Removal Note

1. Knock the crimped portion of the locknut outward using a small chisel and a hammer.
2. Lock the hub by applying the brakes.
3. Remove the locknut.

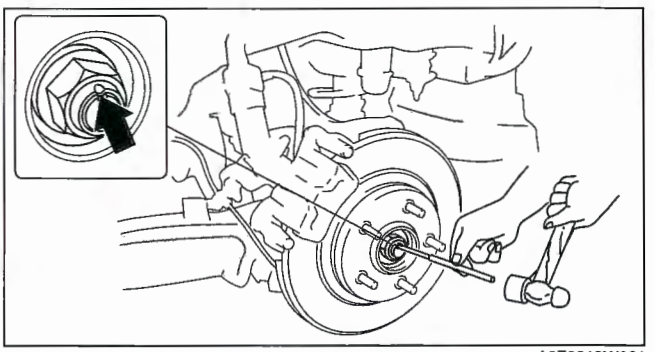

A6E0312W021

Bolt (Rear Lower Arm (Outer)) Removal Note

1. Support the lower arm with a jack.
2. Loosen the lower arm bolts (inner).
3. Remove the lower arm bolts (outer).
4. Gradually lower the jack and separate the lower arm (outer) from the knuckle.

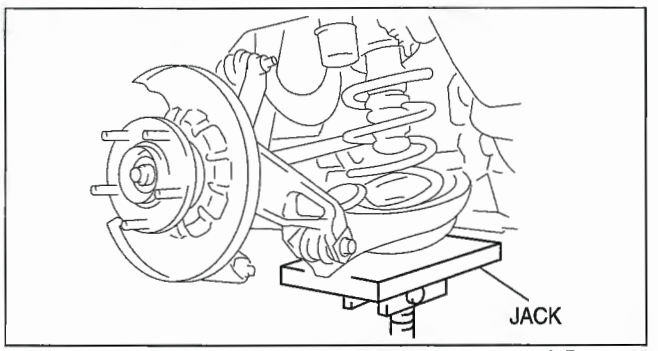

A6E63142102

Bolt (Shock Absorber (Lower)) Removal Note

1. Support the trailing link and the knuckle component with a jack.
2. Remove the lower shock absorber bolts.

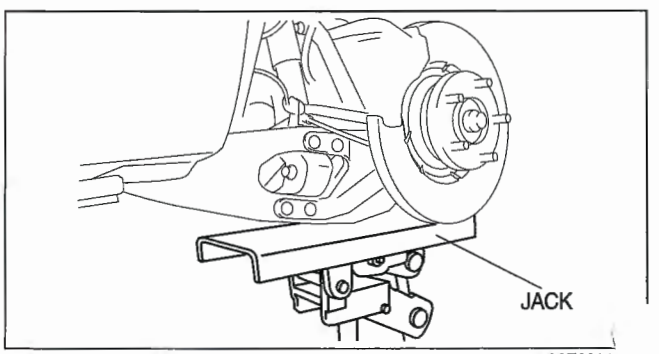

A6E63142.

Bolt (Lateral Link (Outer)) Removal Note

1. Loosen the lateral link bolts (inner).
2. Remove the lateral link bolts (outer), and remove the lateral link (outer) from the knuckle.

lt (Trailing Link (Front)) Removal Note

Warning

- **Be sure that the trailing link and the knuckle component are supported securely with a jack. Otherwise, the trailing link and/or the knuckle component may fall, causing death or injury, or vehicle damage.**

1. Verify that the trailing link and the knuckle component are supported securely with a jack, and remove the bolts at the trailing link front.

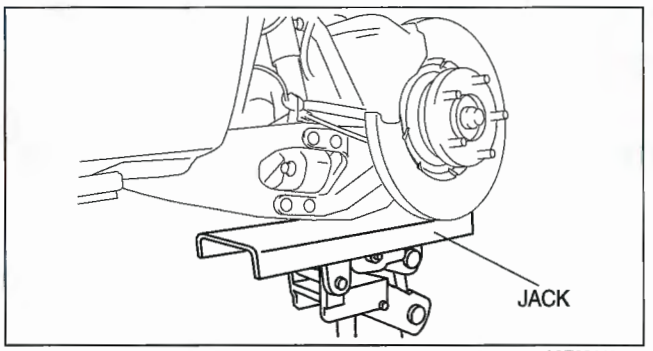

A6E63142103

Wheel Hub Removal Note

1. Remove the wheel hub from the knuckle using the **SSTs**.

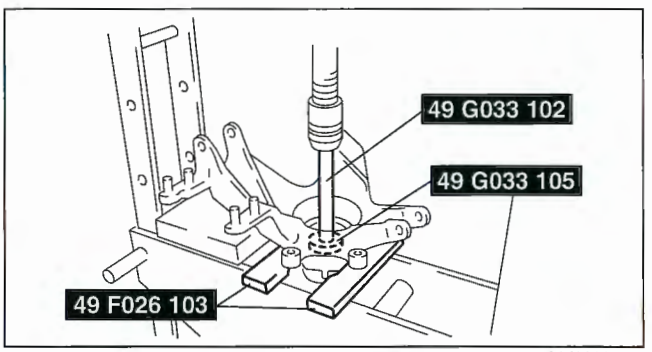

A6J63142104

2. If the bearing inner race remains on the wheel hub, grind a section of the bearing inner race until **approx. 0.5 mm {0.02 in}** remains. Then remove it using a chisel.

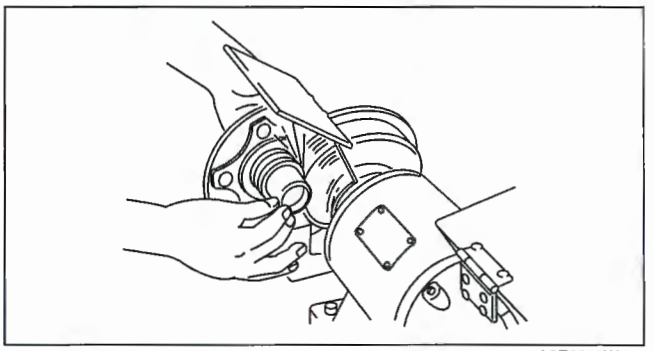

A6E6312W002

Wheel Bearing Removal Note

1. Remove the wheel bearing from the knuckle using the **SSTs**.

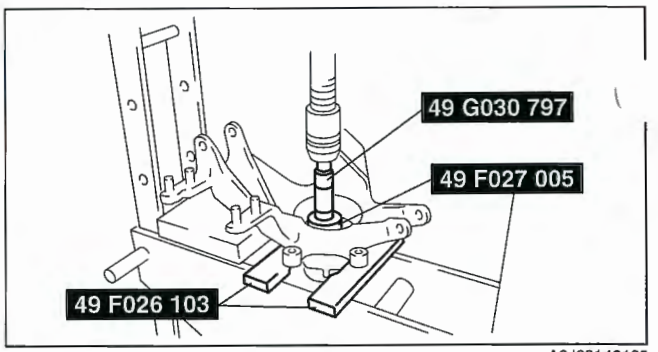

A6J63142105

Dust Cover Removal Note

Note
- The dust cover does not need to be removed unless it is being replaced.

1. Mark the dust cover and knuckle for proper installation.
2. Remove the dust cover from the knuckle using a chisel.

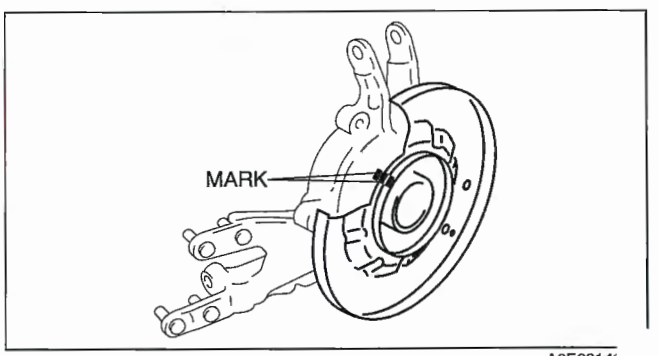

A6E6314

Wheel Hub Bolt Removal Note

Note
- The wheel hub bolts do not need to be removed unless they are being replaced.

1. Remove the wheel hub bolts from the wheel hub using a press.

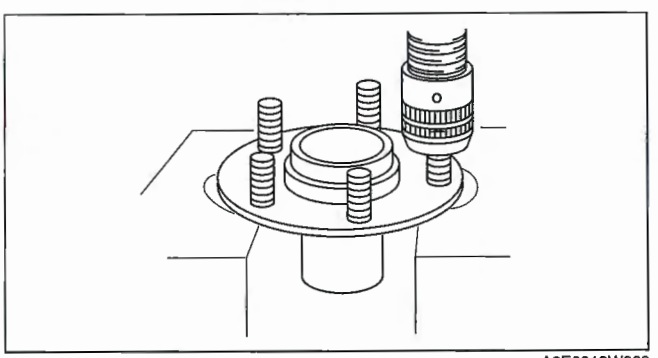
A6E6312W003

Wheel Hub Bolt Installation Note

1. Install the new wheel hub bolts to the wheel hub using a press.

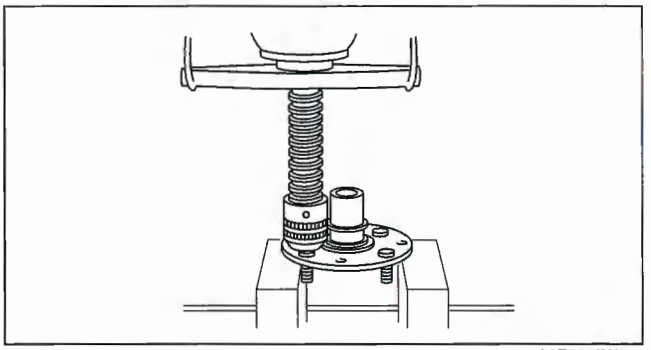

A6E6312W004

Dust Cover Installation Note

1. Mark the new dust cover in the same way as the removed one.
2. Align the marks of the new dust cover and the knuckle.

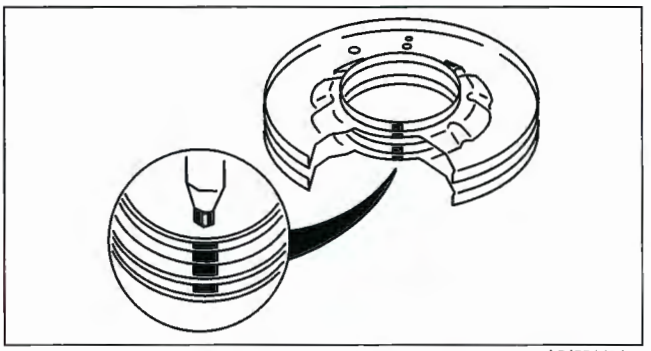

A6J63142107

3. Install the new dust cover to the knuckle using the **SSTs**.

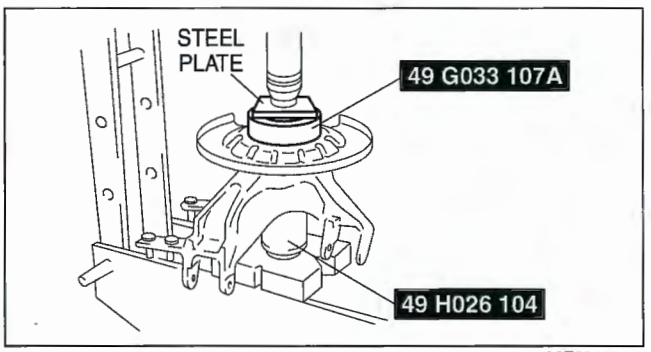

A6E63142105

Wheel Bearing Installation Note

1. Install the new wheel bearing to the knuckle using the **SSTs**.

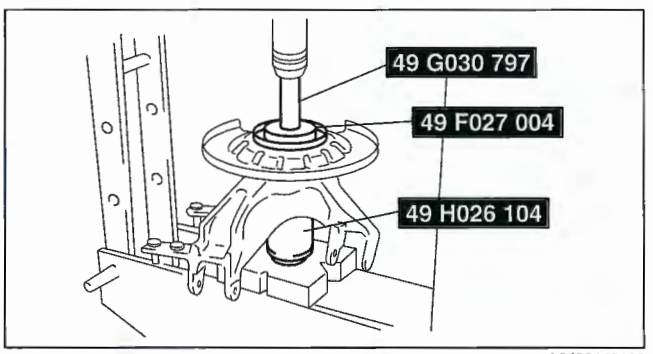

A6J63142109

Wheel Hub Installation Note

1. Install the wheel hub to the knuckle using the **SSTs**.

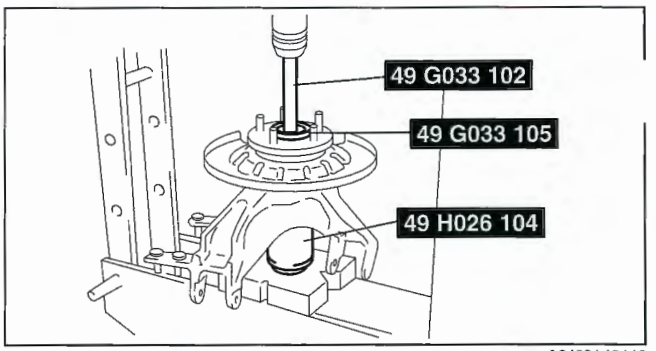

A6J63142110

Bolt (Trailing Link (Front)) Installation Note

Warning

- **Be sure that the trailing link and the knuckle component are supported securely with a jack. Otherwise, the trailing link and/or the knuckle component may fall, causing death or injury, or vehicle damage.**

1. Support the trailing link and the knuckle component with a jack.
2. Tighten the bolts at the trailing link (front).

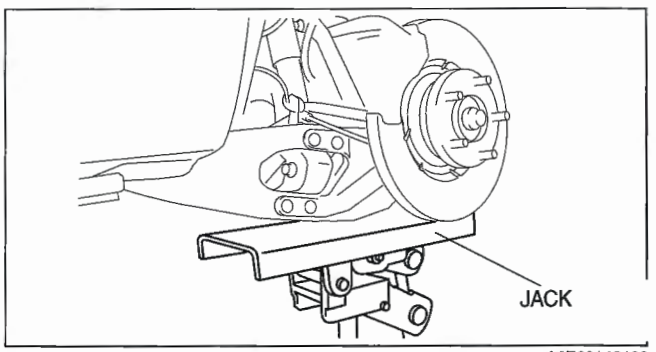

A6E63142103

Rear Coil Spring Installation Note

1. Install the coil spring so that its small diameter end points downward.
2. Set a jack to the bottom of the lower arm, and jack it up gradually.

Warning

- **Be careful when installing the coil spring, as it may fly out by spring force, causing death or injury, or vehicle damage.**

3. Install the lower arm bolts (outer).

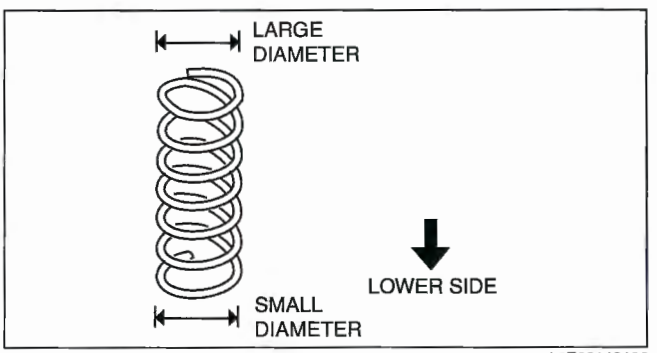

A6E63142106

Locknut Installation Note

1. Install a new locknut and stake it as shown.

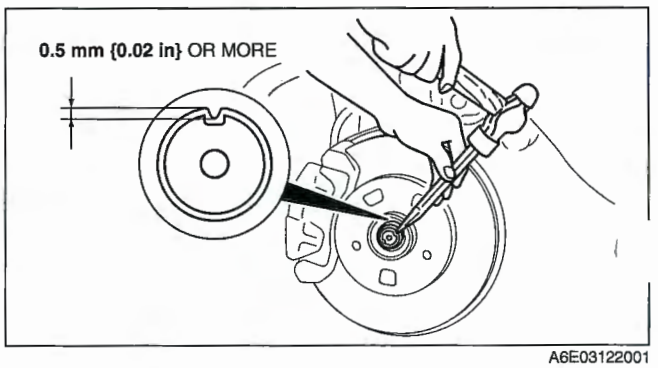

A6E03122001

03–13 DRIVE SHAFT

DRIVE SHAFT LOCATION INDEX 03–13–2
INT SHAFT PRE-INSPECTION 03–13–3
JOINT SHAFT
REMOVAL/INSTALLATION [L3] 03–13–3
Joint Shaft Removal Note 03–13–4
Clip Installation Note 03–13–4
JOINT SHAFT
REMOVAL/INSTALLATION[AJ] 03–13–5
Drive Shaft And Joint Shaft
Removal Note 03–13–6
Joint Shaft Removal Note 03–13–6
Clip Installation Note 03–13–6
Drive Shaft And Joint Shaft
Installation Note 03–13–7
JOINT SHAFT REMOVAL/INSTALLATION
[L3 WITH TC] 03–13–7
Joint Shaft Removal Note 03–13–8
Clip Installation Note 03–13–8
JOINT SHAFT
DISASSEMBLY/ASSEMBLY [L3] 03–13–8
Joint Shaft Disassembly Note 03–13–9
Bearing Disassembly Note 03–13–9
Dust Seal (Wheel Side)
Assembly Note 03–13–9
Bearing Assembly Note 03–13–10
Dust Seal (Differential Side)
Assembly Note 03–13–10
Joint Shaft Assembly Note 03–13–10
JOINT SHAFT DISASSEMBLY [AJ] 03–13–11
Joint Shaft Disassembly Note 03–13–11
Dust Seal (Differential Side)
Disassembly Note 03–13–11
Bearing And Dust Seal (Drive Shaft Side)
Disassembly Note 03–13–11
JOINT SHAFT ASSEMBLY [AJ] 03–13–12
Bearing Assembly Note 03–13–12
Dust Seal (Differential Side)
Assembly Note 03–13–12
Dust Seal (Drive Shaft Side)
Assembly Note 03–13–13
Joint Shaft Assembly Note 03–13–13
JOINT SHAFT DISASSEMBLY
[L3 WITH TC] 03–13–13
Dust Seal Disassembly Note 03–13–13
Joint Shaft Disassembly Note 03–13–14
JOINT SHAFT ASSEMBLY
[L3 WITH TC] 03–13–14
Bearing Assembly Note 03–13–14
Joint Shaft Assembly Note 03–13–15
Dust Seal Assembly Note 03–13–15
FRONT DRIVE SHAFT
PRE-INSPECTION 03–13–15
FRONT DRIVE SHAFT
REMOVAL/INSTALLATION
[L3, L3 WITH TC] 03–13–16
Drive Shaft Removal Note 03–13–17
Clip Installation Note 03–13–18
Drive Shaft Installation Note 03–13–18
FRONT DRIVE SHAFT
REMOVAL/INSTALLATION [AJ] 03–13–19
Drive Shaft (Left Side)
Removal Note 03–13–20
Drive Shaft (Right Side)
Removal Note 03–13–20
Joint Shaft Installation Note 03–13–20
Clip Installation Note 03–13–21
Drive Shaft (Left Side)
Installation Note 03–13–21
FRONT DRIVE SHAFT
DISASSEMBLY/ASSEMBLY [ATX] 03–13–21
Boot Band (Wheel Side)
Disassembly Note 03–13–22
Boot Band (Transaxle Side)
Disassembly Note 03–13–22
Outer Ring Disassembly Note 03–13–23
Snap Ring, Tripod Joint
Disassembly Note 03–13–23
Boot Disassembly Note 03–13–23
ABS Sensor Rotor (With ABS)
Disassembly Note 03–13–24
Dynamic Damper Assembly Note 03–13–24
ABS Sensor Rotor (With ABS)
Assembly Note 03–13–24
Boot Assembly Note 03–13–24
Tripod Joint, Snap Ring
Assembly Note 03–13–25
Outer Ring Assembly Note 03–13–25
Boot Band (Transaxle Side)
Assembly Note 03–13–26
Boot Band (Wheel Side)
Assembly Note 03–13–26
FRONT DRIVE SHAFT
DISASSEMBLY/ASSEMBLY [MTX] 03–13–27
Clip Disassembly Note 03–13–28
Balls, Inner Ring, Cage
Disassembly Note 03–13–28
Dynamic Damper Assembly Note 03–13–28
Boot Assembly Note 03–13–28
Cage, Inner Ring, Balls, Snap Ring
Assembly Note 03–13–29
Outer Ring, Clip Assembly Note 03–13–29
REAR DRIVE SHAFT
PRE-INSPECTION 03–13–30
REAR DRIVE SHAFT
REMOVAL/INSTALLATION 03–13–30
Rear Drive Shaft Removal Note 03–13–31
Clip Installation Note 03–13–31
REAR DRIVE SHAFT
DISASSEMBLY/ASSEMBLY 03–13–31
Clip Disassembly Note 03–13–32
Snap Ring Disassembly Note 03–13–32
Balls, Inner Ring, Cage
Disassembly Note 03–13–33
ABS Sensor Rotor Assembly Note 03–13–33
Boot Assembly Note 03–13–33
Cage, Inner Ring, Balls, Snap
Ring Assembly Note 03–13–34
Outer Ring, Clip Assembly Note 03–13–34

DRIVE SHAFT LOCATION INDEX

E6U031325500W02

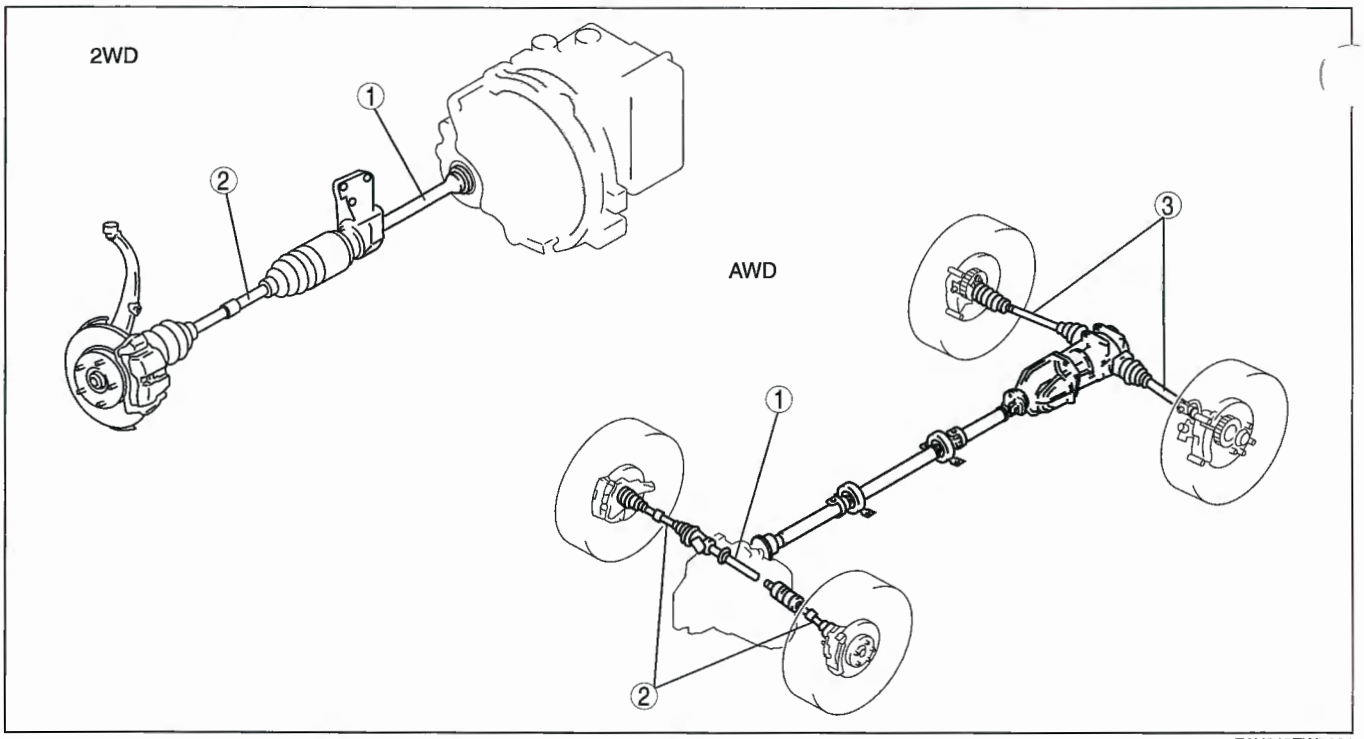

E6U313ZW7001

1	Joint shaft (See 03–13–3 JOINT SHAFT PRE-INSPECTION) (See 03–13–3 JOINT SHAFT REMOVAL/ INSTALLATION [L3]) (See 03–13–5 JOINT SHAFT REMOVAL/ INSTALLATION [AJ]) (See 03–13–7 JOINT SHAFT REMOVAL/ INSTALLATION [L3 WITH TC]) (See 03–13–8 JOINT SHAFT DISASSEMBLY/ ASSEMBLY [L3]) (See 03–13–11 JOINT SHAFT DISASSEMBLY [AJ]) (See 03–13–12 JOINT SHAFT ASSEMBLY [AJ]) (See 03–13–13 JOINT SHAFT DISASSEMBLY [L3 WITH TC]) (See 03–13–14 JOINT SHAFT ASSEMBLY [L3 WITH TC])

2	Front drive shaft (See 03–13–15 FRONT DRIVE SHAFT PRE-INSPECTION) (See 03–13–16 FRONT DRIVE SHAFT REMOVAL/ INSTALLATION [L3, L3 WITH TC]) (See 03–13–19 FRONT DRIVE SHAFT REMOVAL/ INSTALLATION [AJ]) (See 03–13–21 FRONT DRIVE SHAFT DISASSEMBLY/ASSEMBLY [ATX]) (See 03–13–27 FRONT DRIVE SHAFT DISASSEMBLY/ASSEMBLY [MTX])
3	Rear drive shaft (AWD) (See 03–13–30 REAR DRIVE SHAFT PRE-INSPECTION) (See 03–13–30 REAR DRIVE SHAFT REMOVAL/ INSTALLATION) (See 03–13–31 REAR DRIVE SHAFT DISASSEMBLY/ASSEMBLY)

JOINT SHAFT PRE-INSPECTION

E6U031325700W01

1. Verify that the joint shaft is not twisted or cracked.
   - Replace it as necessary.

Turn the joint shaft by hand and verify that the bearing rotates smoothly and freely.
- Replace it as necessary.

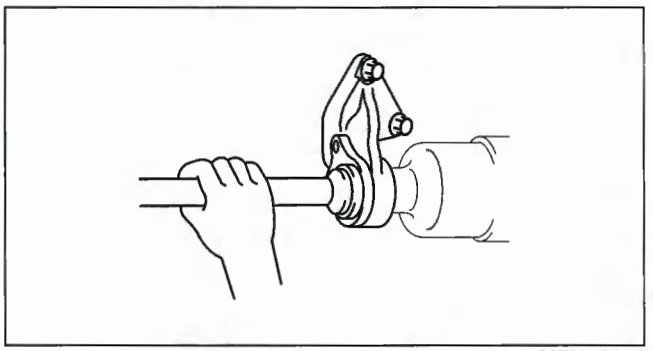

A6E0313W015

JOINT SHAFT REMOVAL/INSTALLATION [L3]

E6U031325700W02

Caution
- **Performing the following procedures without first removing the ABS wheel-speed sensor may possibly cause an open circuit in the harness if it is pulled by mistake. Before performing the following procedures, remove the ABS wheel-speed sensor (axle side) and fix it to an appropriate place where the sensor will not be pulled by mistake while the vehicle is being serviced.**

1. Drain the transaxle oil. (See 05–17A–12 AUTOMATIC TRANSAXLE FLUID (ATF) REPLACEMENT [FS5A-EL].) (See 05–15A–2 TRANSAXLE OIL REPLACEMENT [G35M-R].)
2. Remove the ABS sensor. (See 04–13–8 FRONT ABS WHEEL-SPEED SENSOR REMOVAL/INSTALLATION.)
3. Remove in the order indicated in the table.
4. Install in the reverse order of removal.

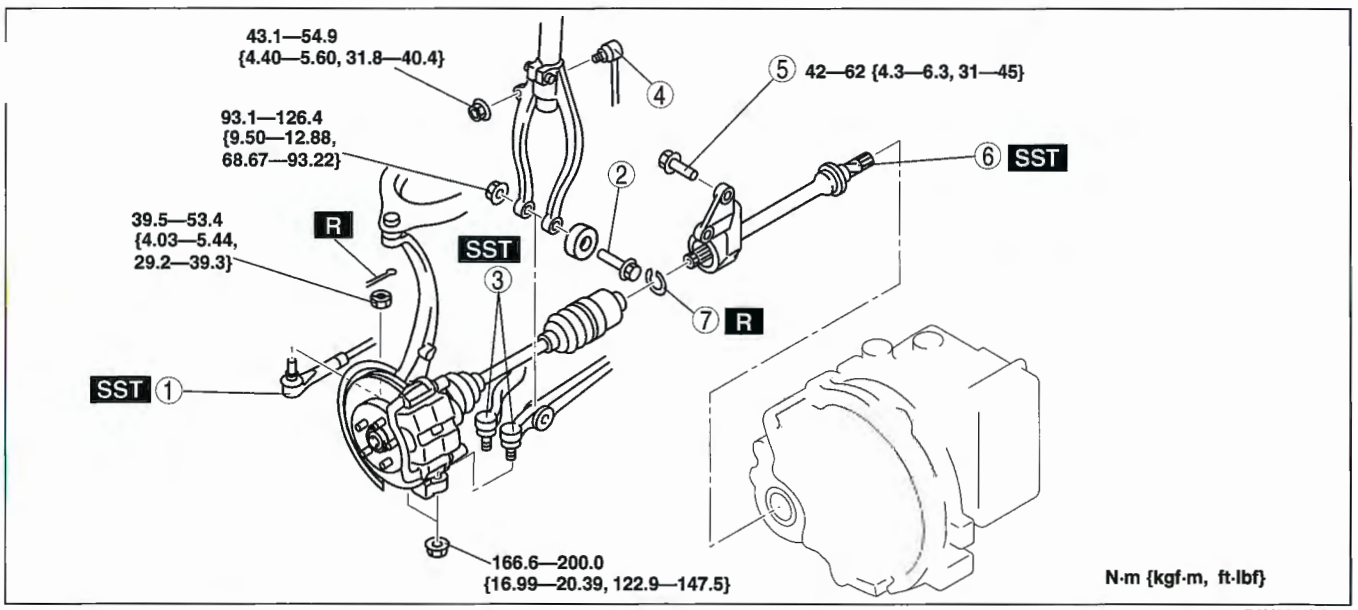

B6U0313W002

1	Tie-rod end ball joint (See 06–12–11 STEERING GEAR AND LINKAGE REMOVAL/INSTALLATION [L3].)
2	Bolt
3	Lower arm (front, rear) ball joint (See 02–13–10 FRONT LOWER ARM (FRONT) REMOVAL/INSTALLATION.) (See 02–13–15 FRONT LOWER ARM (REAR) REMOVAL/INSTALLATION.)
4	Stabilizer control link

5	Joint shaft bracket bolt
6	Joint shaft (See 03–13–4 Joint Shaft Removal Note.)
7	Clip (See 03–13–4 Clip Installation Note.)

Joint Shaft Removal Note

1. Separate the right side drive shaft from the joint shaft by tapping on a brass bar inserted between them.
2. Separate the joint shaft bracket from cylinder block.
3. Pull the joint shaft straight out.

Caution

- **The sharp edges of the joint shaft can slice or puncture the oil seal. Be careful when removing the joint shaft from the transaxle.**

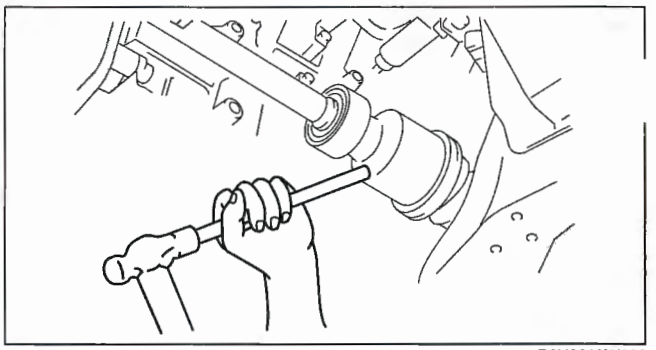

B6U0313W003

4. Install the **SST** into the transaxle to hold the side gears after the joint shaft is removed.

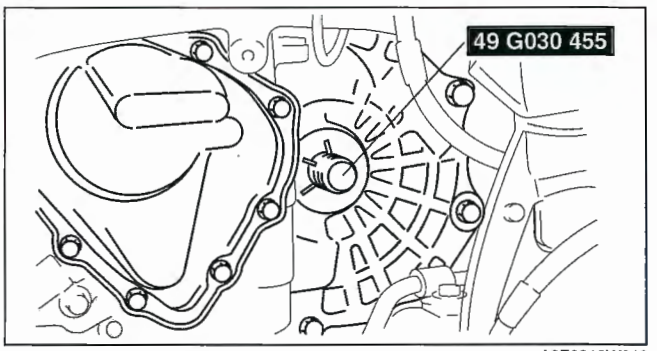

A6E0313W019

Clip Installation Note

1. Install a new clip onto the joint shaft with the opening facing upward. Ensure that the diameter of the clip does not exceed the specification on installation.
2. After installation, measure the outer diameter. If it exceeds the specification, repeat Step 1 using a new clip.

Outer diameter specification
30.0—31.2 mm {1.19—1.23 in}

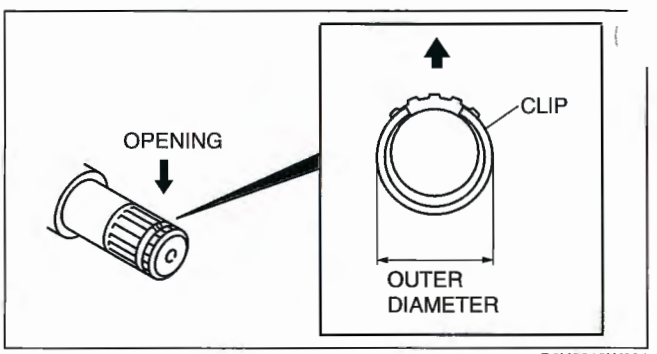

B6U0313W001

JOINT SHAFT REMOVAL/INSTALLATION [AJ]

E6U031325700W03

Caution

- **Performing the following procedures without first removing the ABS wheel-speed sensor may possibly cause an open circuit in the harness if it is pulled by mistake. Before performing the following procedures, remove the ABS wheel-speed sensor (axle side) and fix it to an appropriate place where the sensor will not be pulled by mistake while the vehicle is being serviced.**
- **Removing the drive shaft with the joint shaft bracket installed may cause the deformation of the joint shaft bracket. Therefore remove/install the drive shaft and joint shaft as a component.**

1. Drain the transaxle oil. (MTX only) (See 05–15B–2 TRANSAXLE OIL REPLACEMENT [A65M-R].)
2. Remove the ABS sensor. (See 04–13–8 FRONT ABS WHEEL-SPEED SENSOR REMOVAL/INSTALLATION.)
3. Remove in the order indicated in the table.
4. Install in the reverse order of removal.

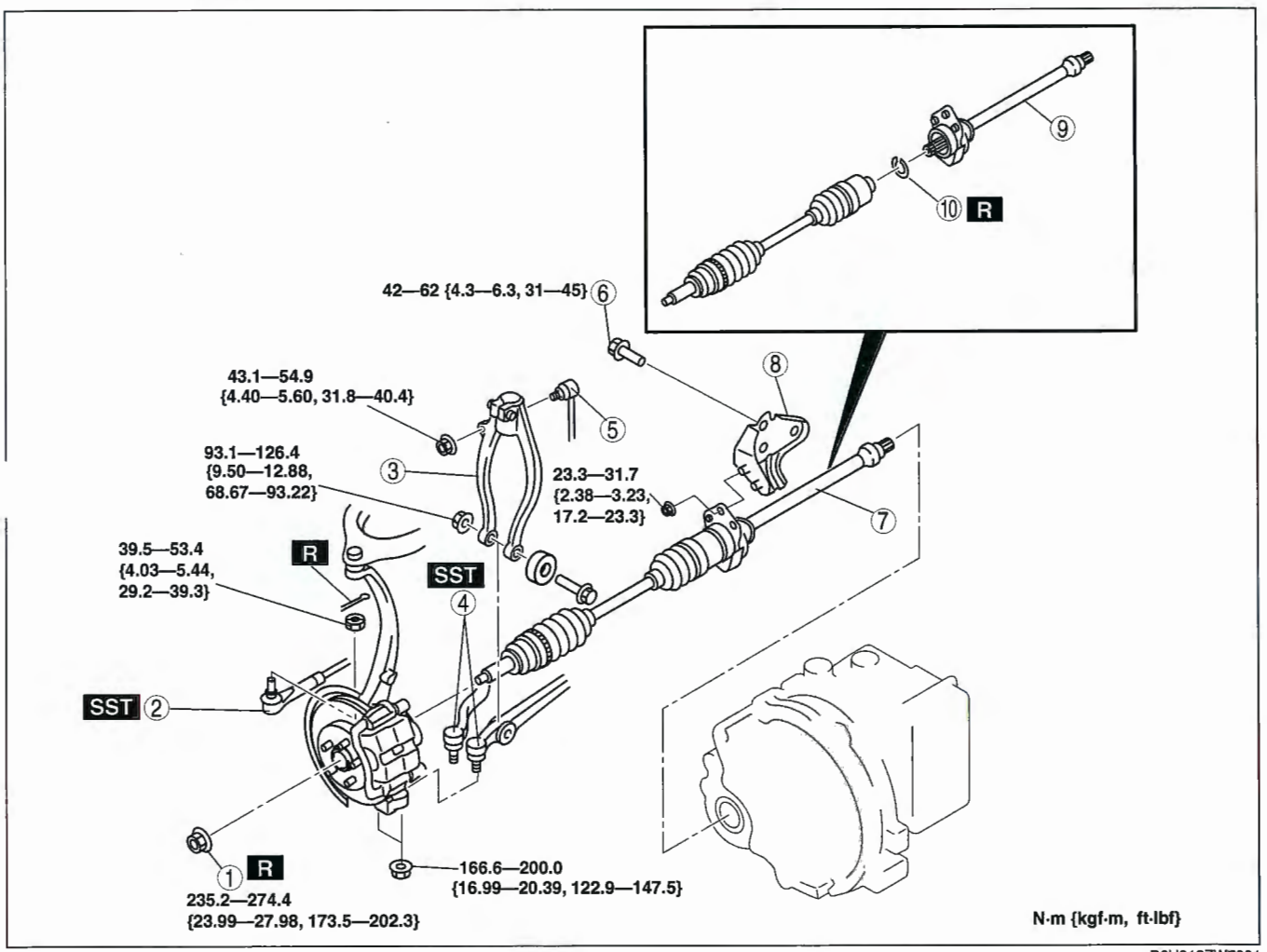

D6U312ZW7001

1	Locknut (See 03–11–4 Locknut Removal Note.) (See 03–11–7 Locknut Installation Note.)
2	Tie-rod end ball joint (See 06–12–13 STEERING GEAR AND LINKAGE REMOVAL/INSTALLATION [AJ].)
3	Damper fork
4	Lower arm (front, rear) ball joint (See 02–13–10 FRONT LOWER ARM (FRONT) REMOVAL/INSTALLATION.) (See 02–13–15 FRONT LOWER ARM (REAR) REMOVAL/INSTALLATION.)

5	Stabilizer control link
6	Joint shaft bracket bolt
7	Drive shaft and joint shaft (See 03–13–6 Drive Shaft And Joint Shaft Removal Note.) (See 03–13–7 Drive Shaft And Joint Shaft Installation Note.)
8	Joint shaft bracket
9	Joint shaft (See 03–13–6 Joint Shaft Removal Note.)
10	Clip (See 03–13–6 Clip Installation Note.)

Drive Shaft And Joint Shaft Removal Note

1. Install a spare nut onto the drive shaft so that the nut is flush with the end of the drive shaft.
2. Tap the nut with a copper hammer to loosen the drive shaft from the front wheel hub.
3. Separate the drive shaft from the wheel hub.

Caution

- **The sharp edges of the drive shaft can slice or puncture the oil seal. Be careful when removing the drive shaft from the transaxle.**

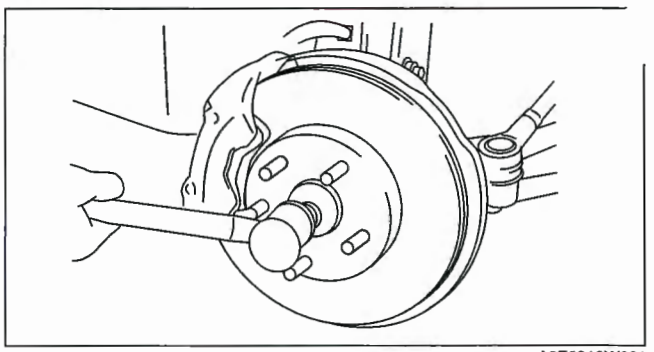

A6E6316W001

4. Separate the left side drive shaft from the transaxle by prying with a bar inserted between the outer ring and the transaxle, as shown in the figure.

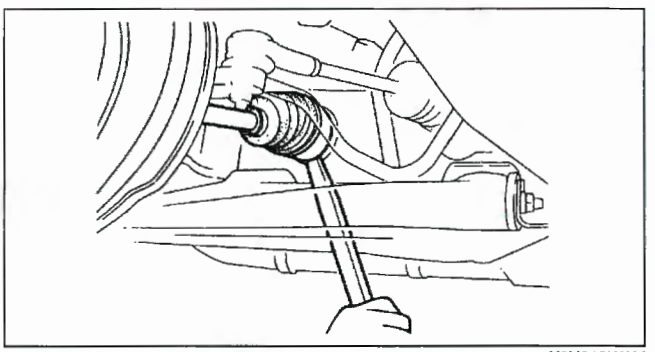

X3U313WAM

Joint Shaft Removal Note

1. Secure the shaft portion of the joint shaft in a vise.
2. As shown in the figure, insert a pry bar between the drive shaft and joint shaft, and tap on the bar to uncouple them.

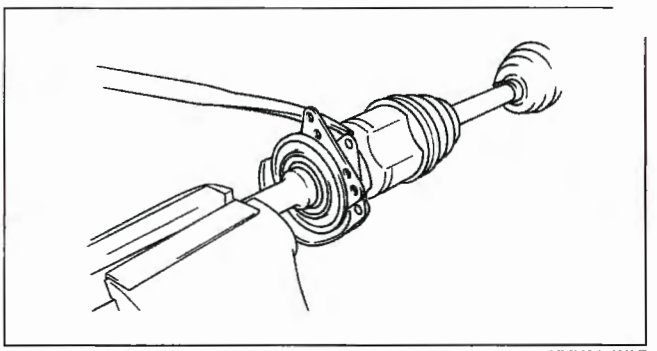

YMU313WAF

Clip Installation Note

1. Install a new clip onto the joint shaft with the opening facing upward. Ensure that the diameter of the clip does not exceed the specification on installation.
2. After installation, measure the outer diameter. If it exceeds the specification, repeat Step 1 using a new clip.

Outer diameter specification
31.2 mm {1.23 in}

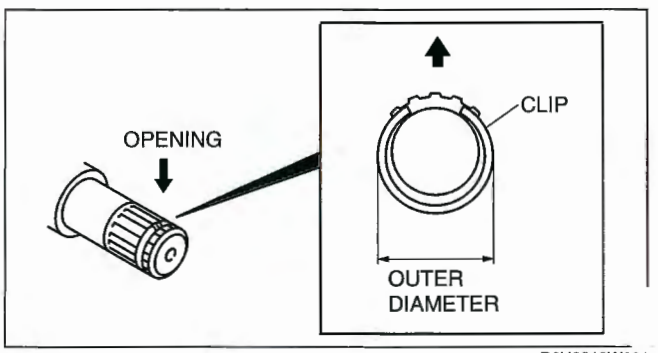

B6U0313W001

Drive Shaft And Joint Shaft Installation Note

1. Apply ATF to the oil seal lip.
2. Push the drive shaft and joint shaft into the transaxle.

Caution

- **The sharp edges of the joint shaft can slice or puncture the oil seal. Be careful when installing the joint shaft to the transaxle.**

JOINT SHAFT REMOVAL/INSTALLATION [L3 WITH TC]

E6U031325700W07

Caution

- **Performing the following procedures without first removing the ABS wheel-speed sensor may possibly cause an open circuit in the harness if it is pulled by mistake. Before performing the following procedures, remove the ABS wheel-speed sensor (axle side) and fix it to an appropriate place where the sensor will not be pulled by mistake while the vehicle is being serviced.**

1. Drain the transaxle oil. (See 05–15C–2 TRANSAXLE OIL REPLACEMENT [A26MX-R].)
2. Remove the ABS sensor. (See 04–13–8 FRONT ABS WHEEL-SPEED SENSOR REMOVAL/INSTALLATION.)
3. Remove in the order indicated in the table.
4. Install in the reverse order of removal.

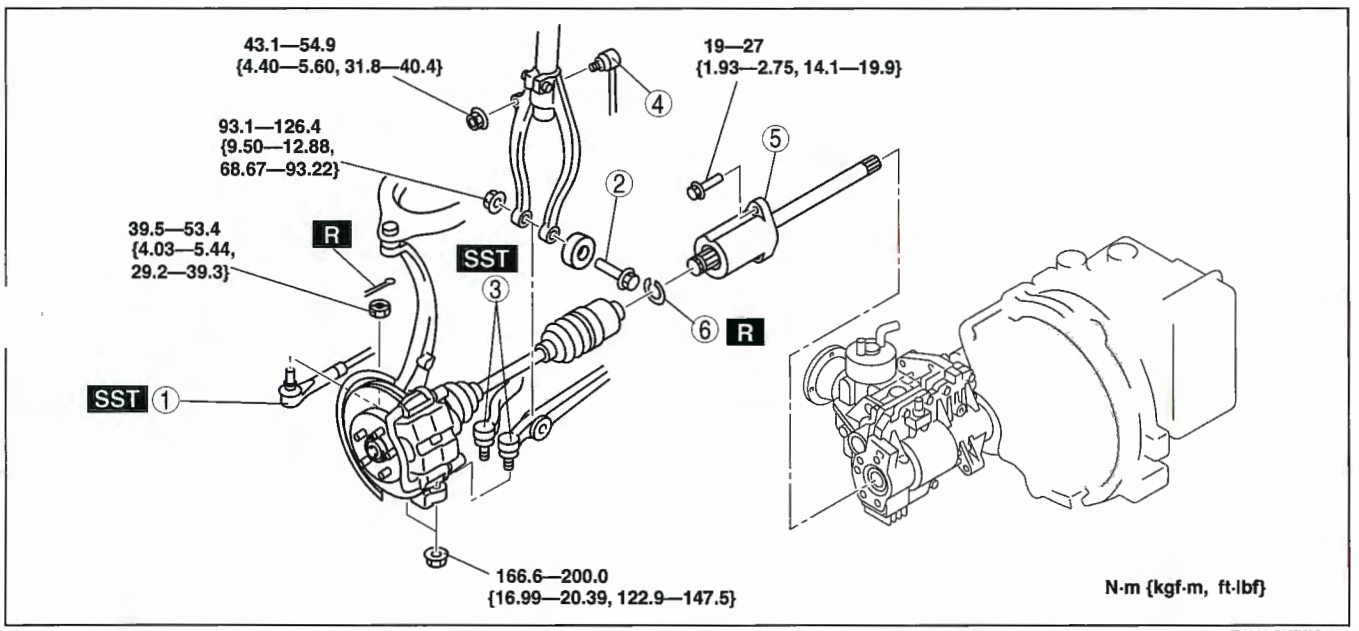

E6U313ZWC002

1	Tie-rod end ball joint (See 06–12–15 STEERING GEAR AND LINKAGE REMOVAL/INSTALLATION [L3 WITH TC])
2	Bolt
3	Lower arm (front, rear) ball joint (See 02–13–11 Front Lower Arm (Front) Ball Joint Removal Note)

4	Stabilizer control link
5	Joint shaft (See 03–13–8 Joint Shaft Removal Note)
6	Clip (See 03–13–8 Clip Installation Note)

Joint Shaft Removal Note

1. Separate the right side drive shaft from the joint shaft by tapping on a brass bar inserted between them.
2. Remove the bolts.
3. Pull the joint shaft straight out.

Caution

- **The sharp edges of the joint shaft can slice or puncture the oil seal. Be careful when removing the joint shaft from the transaxle.**

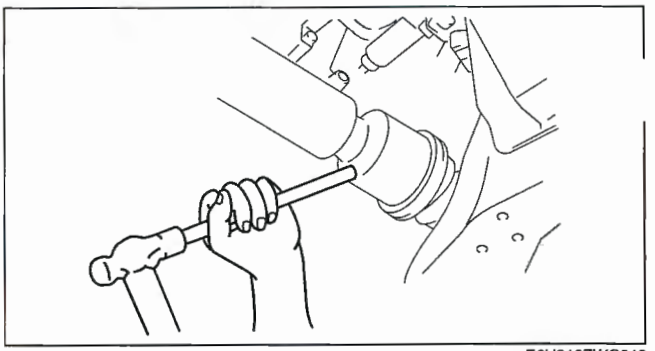

E6U313ZWC013

Clip Installation Note

1. Install a new clip onto the joint shaft with the opening facing upward. Ensure that the diameter of the clip does not exceed the specification on installation.
2. After installation, measure the outer diameter. If it exceeds the specification, repeat Step 1 using a new clip.

Outer diameter specification
34.0 mm {1.34 in} max.

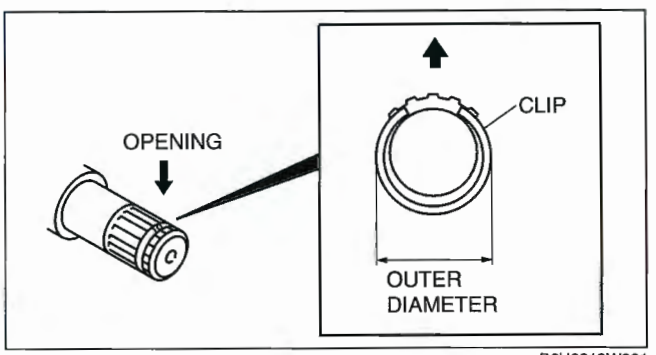

B6U0313W001

JOINT SHAFT DISASSEMBLY/ASSEMBLY [L3]

E6U031325700

1. Disassemble in the order indicated in the table.
2. Assemble in the reverse order of disassembly.

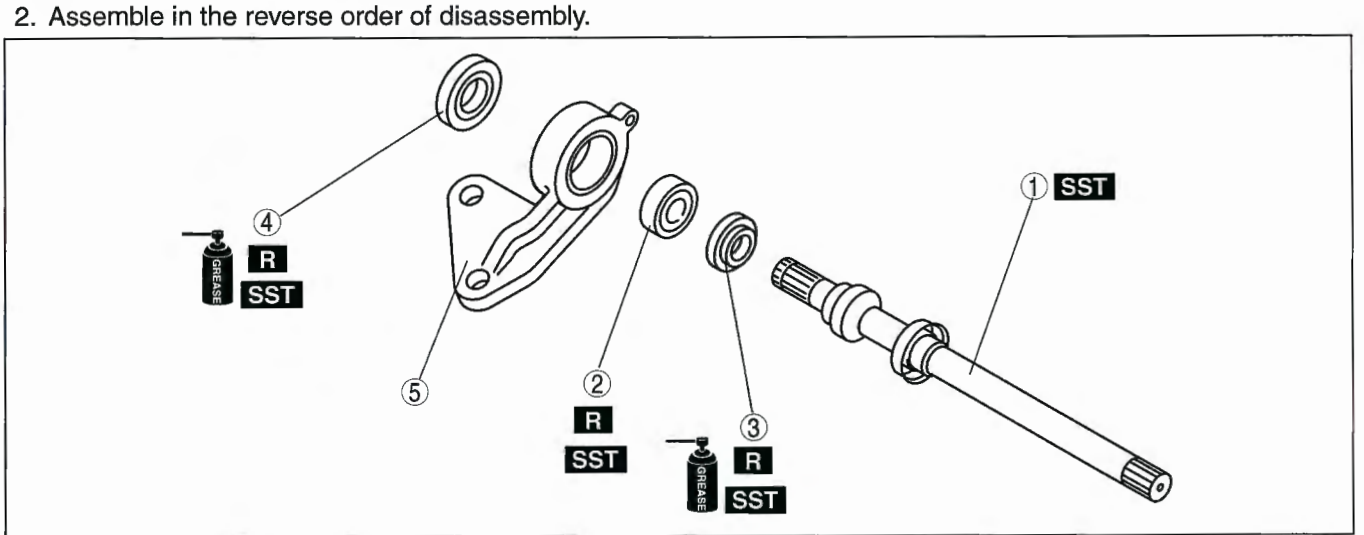

A6J63152001

1	Joint shaft (See 03–13–9 Joint Shaft Disassembly Note.) (See 03–13–10 Joint Shaft Assembly Note.)
2	Bearing (See 03–13–9 Bearing Disassembly Note.) (See 03–13–10 Bearing Assembly Note.)
3	Dust seal (Differential side) (See 03–13–10 Dust Seal (Differential Side) Assembly Note.)
4	Dust seal (Wheel side) (See 03–13–9 Dust Seal (Wheel Side) Assembly Note.)
5	Bracket

Joint Shaft Disassembly Note

1. Disassemble the joint shaft using the **SST**.

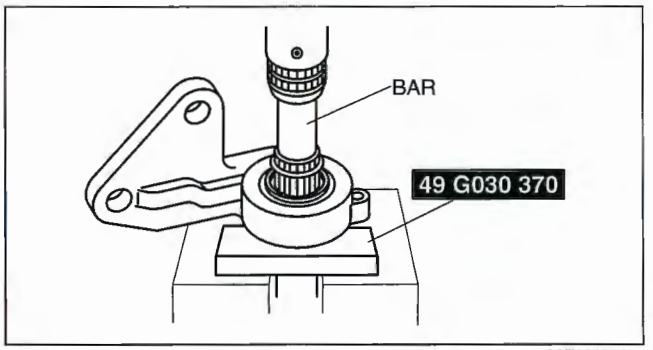

A6E63152102

Bearing Disassembly Note

When the bearing remains on the bracket

1. Remove the bearing and the dust seals (both differential side and wheel side) using the **SSTs**.

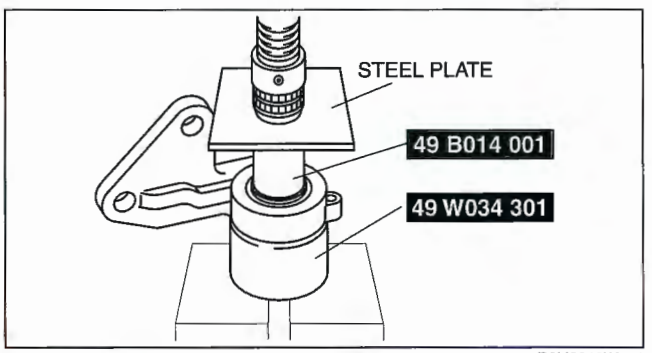

B6U0313W101

When the bearing remains on the shaft

1. Remove the bearing from the joint shaft using the **SST**.

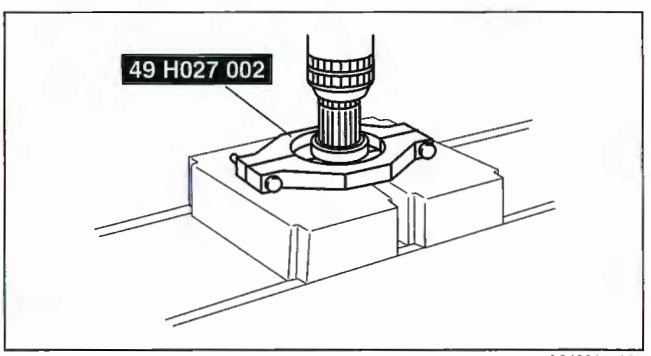

A6J63152003

Dust Seal (Wheel Side) Assembly Note

1. Apply grease to the new dust seal lip.
2. Install the new dust seal (wheel side) using the **SSTs**.

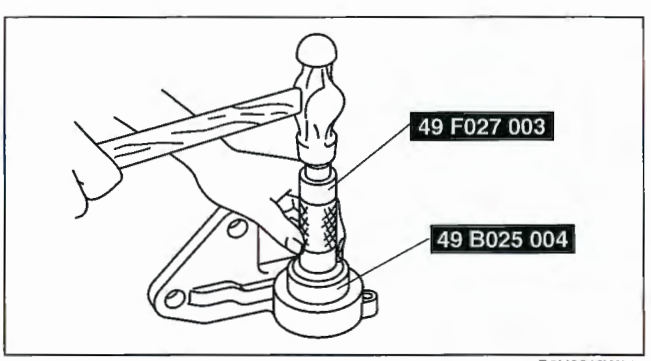

B6U0313W015

Bearing Assembly Note

1. Install the new bearing using the **SSTs**.

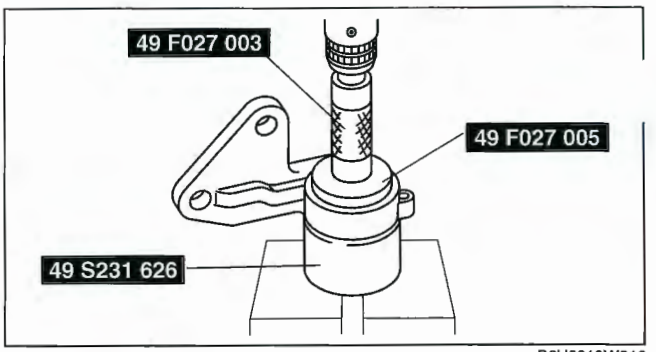

B6U0313W016

Dust Seal (Differential Side) Assembly Note

1. Apply grease to the new dust seal lip.
2. Install the new dust seal (differential side) using a steel plate and the **SSTs**.

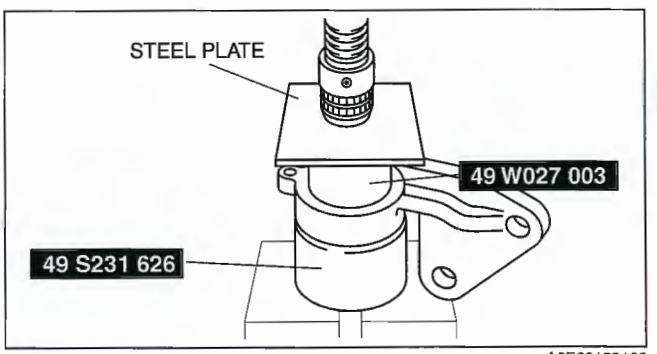

A6E63152103

Joint Shaft Assembly Note

1. Assemble the joint shaft using a press and the **SST**.

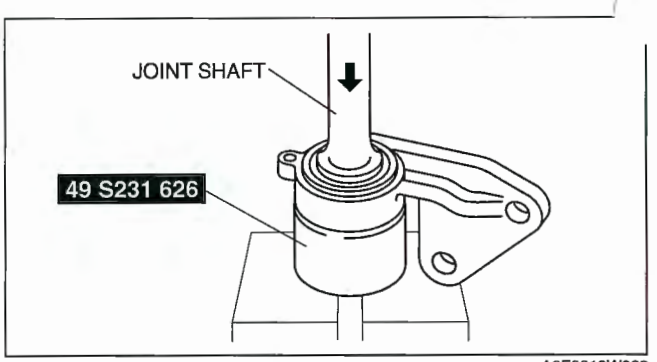

A6E0313W029

JOINT SHAFT DISASSEMBLY [AJ]

E6U031325700W05

1. Disassemble in the order indicated in the table.

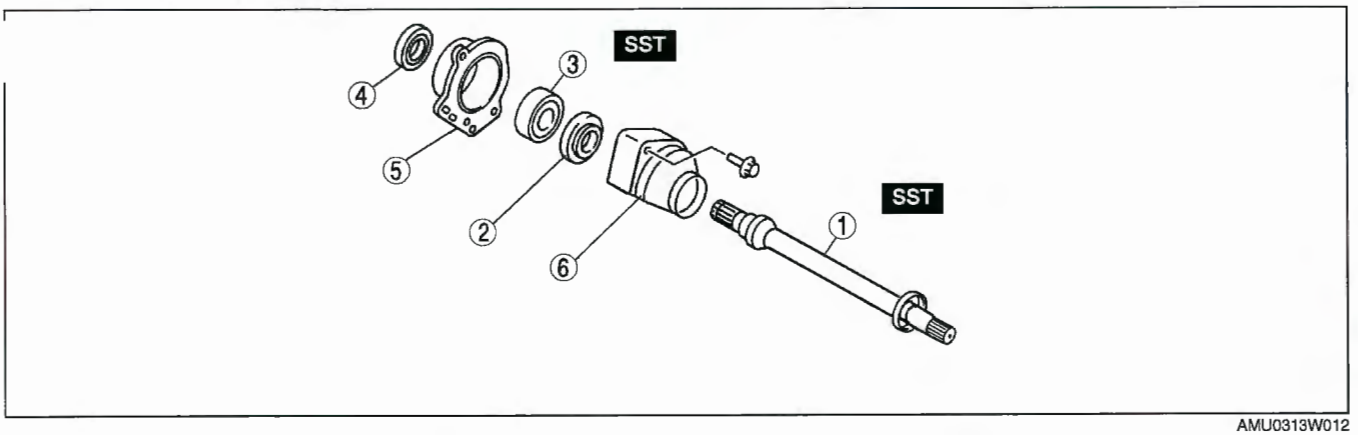

AMU0313W012

1	Joint shaft (See 03–13–11 Joint Shaft Disassembly Note.)
2	Dust seal (differential side) (See 03–13–11 Dust Seal (Differential Side) Disassembly Note.)
3	Bearing (See 03–13–11 Bearing And Dust Seal (Drive Shaft Side) Disassembly Note.)
4	Dust seal (drive shaft side) (See 03–13–11 Bearing And Dust Seal (Drive Shaft Side) Disassembly Note.)
5	Bracket
6	Dust cover

Joint Shaft Disassembly Note

Remove the joint shaft as shown in the figure.

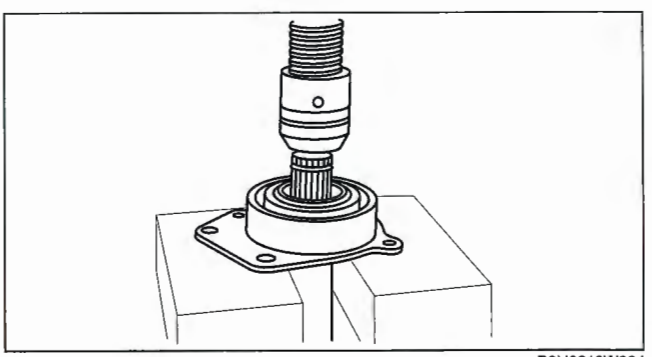

B6U0313W004

Dust Seal (Differential Side) Disassembly Note

1. Remove the dust seal (differential side) using a flathead screwdriver.

Bearing And Dust Seal (Drive Shaft Side) Disassembly Note

1. Remove the bearing using the **SSTs** and a press.

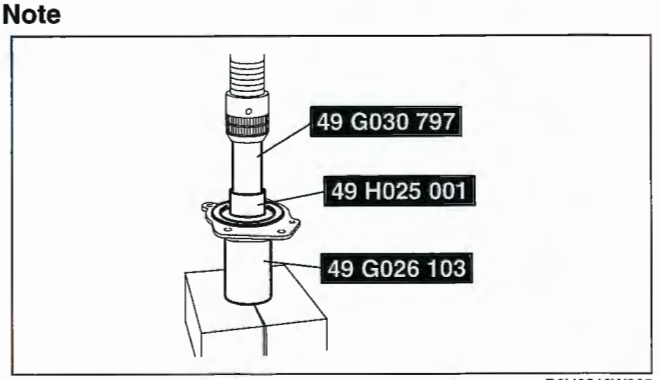

B6U0313W005

JOINT SHAFT ASSEMBLY [AJ]

E6U031325700W06

1. Assemble in the order indicated in the table.

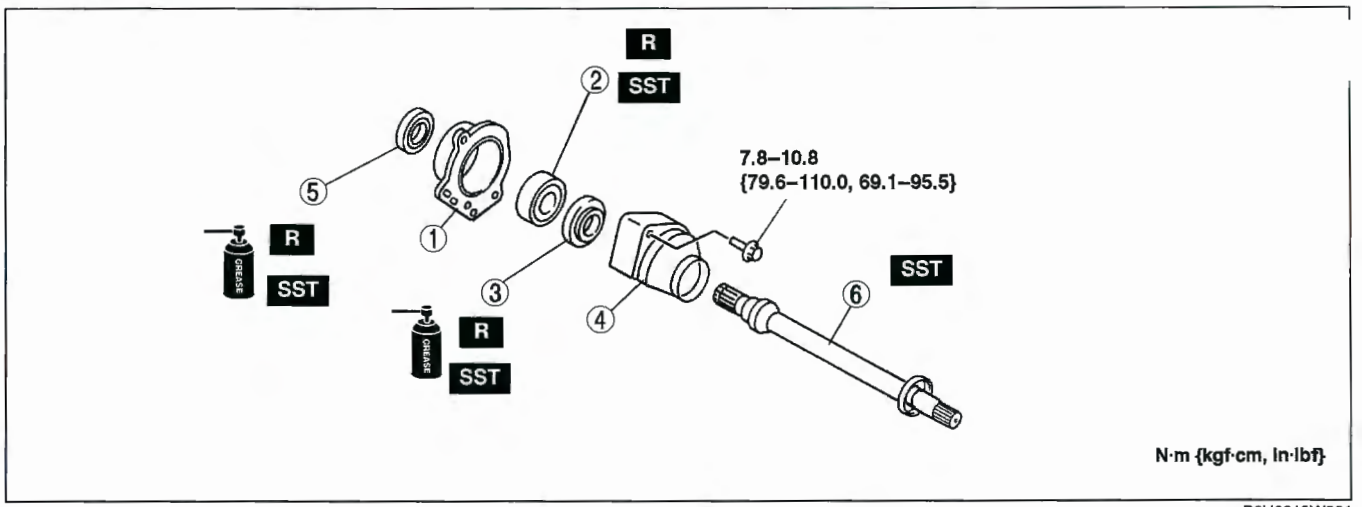

B6U0313W301

1	Bracket
2	Bearing (See 03–13–12 Bearing Assembly Note.)
3	Dust seal (differential side) (See 03–13–12 Dust Seal (Differential Side) Assembly Note.)
4	Dust cover
5	Dust seal (drive shaft side) (See 03–13–13 Dust Seal (Drive Shaft Side) Assembly Note.)
6	Joint shaft (See 03–13–13 Joint Shaft Assembly Note.)

Bearing Assembly Note

1. Install the new bearing using the **SST** and a press.

Note

- Press the outer race of the bearing.

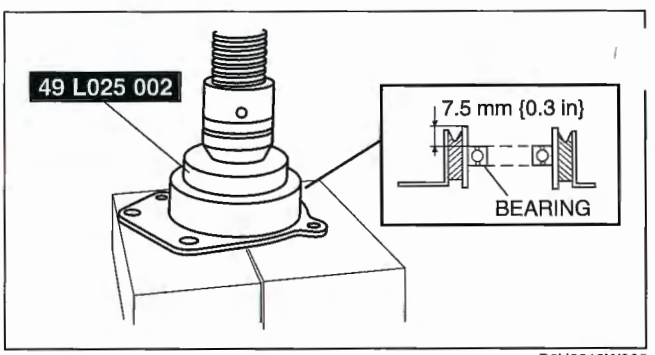

B6U0313W006

Dust Seal (Differential Side) Assembly Note

1. Apply grease to the new dust seal lip.
2. Install the new differential side dust seal using a press, steel plate and the **SST**.

Caution

- **Do not damage the rubber part of the dust cover.**

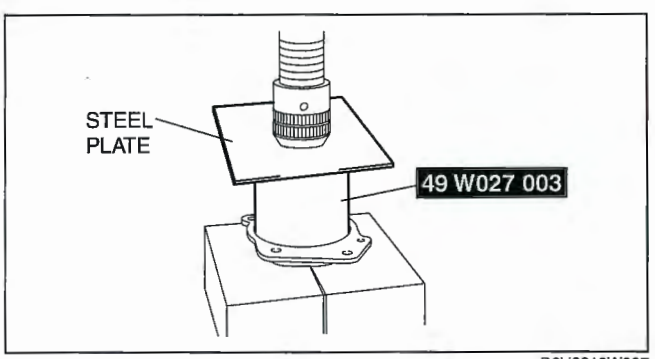

B6U0313W007

Dust Seal (Drive Shaft Side) Assembly Note

1. Apply grease to the new dust seal lip.
2. Install the new drive shaft side dust seal using the **SSTs** and a press.

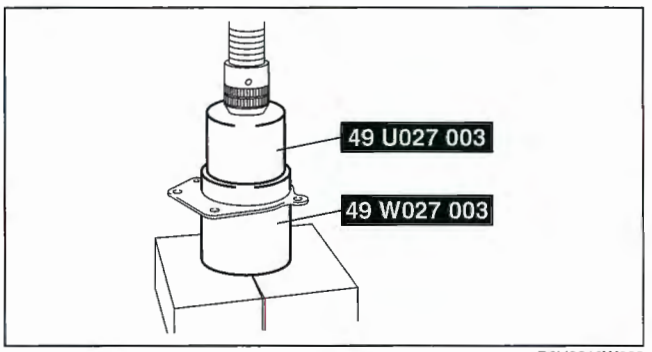

B6U0313W008

Joint Shaft Assembly Note

1. Install the joint shaft using a press and the **SST**.

Note

- Support the inner race of the bearing.

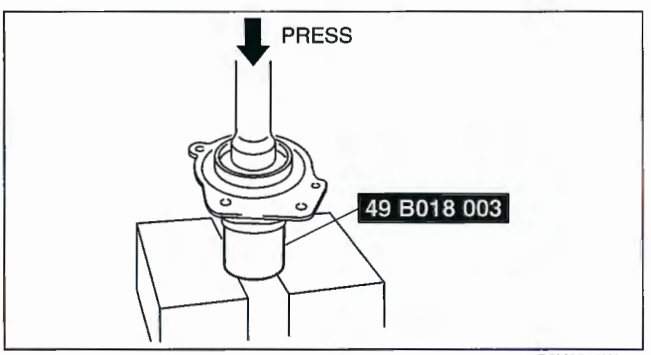

B6U0313W009

JOINT SHAFT DISASSEMBLY [L3 WITH TC]

E6U031325700W08

Disassemble in the order indicated in the table.

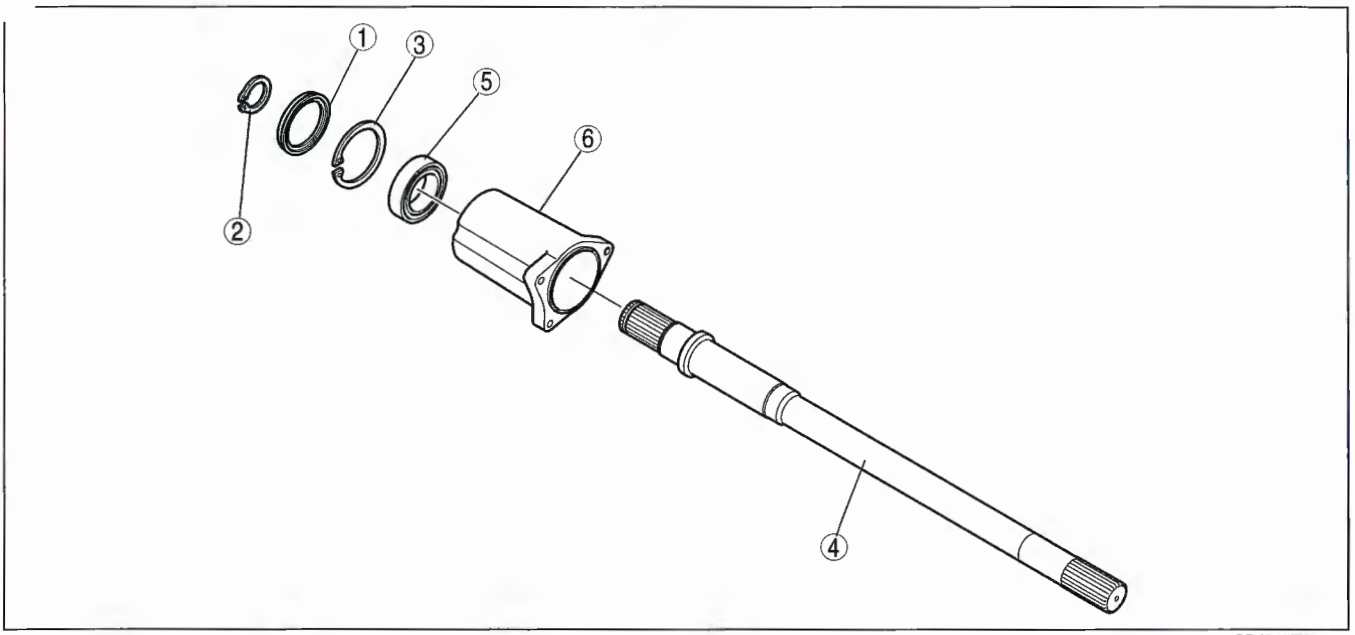

CPJ313ZW7005

1	Dust seal
2	Clip
3	Snap ring

4	Joint shaft (See 03–13–14 Joint Shaft Disassembly Note)
5	Bearing
6	Bracket

Dust Seal Disassembly Note

1. Remove the dust seal using a flathead screwdriver.

Joint Shaft Disassembly Note

1. Remove the joint shaft.

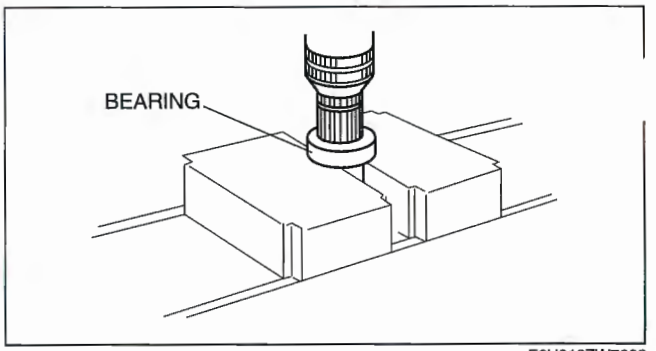

E6U313ZW7002

JOINT SHAFT ASSEMBLY [L3 WITH TC]

E6U031325700W09

1. Assemble in the order indicated in the table.

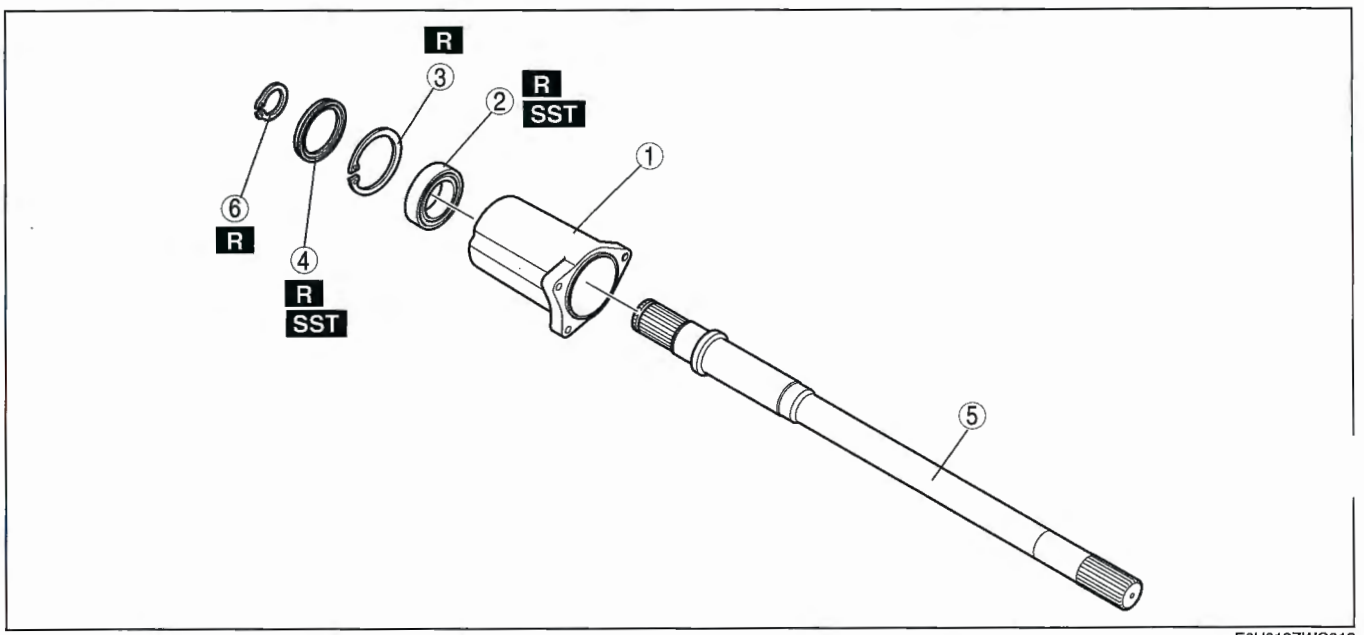

E6U313ZWC012

1	Bracket
2	Bearing (See 03–13–14 Bearing Assembly Note)
3	Snap ring

4	Dust seal (See 03–13–15 Dust Seal Assembly Note)
5	Joint shaft (See 03–13–15 Joint Shaft Assembly Note)
6	Snap ring

Bearing Assembly Note

1. Install the new bearing to the bracket.

Note

- When the bearing is not installed to the bracket by hand, install it using the **SST**.

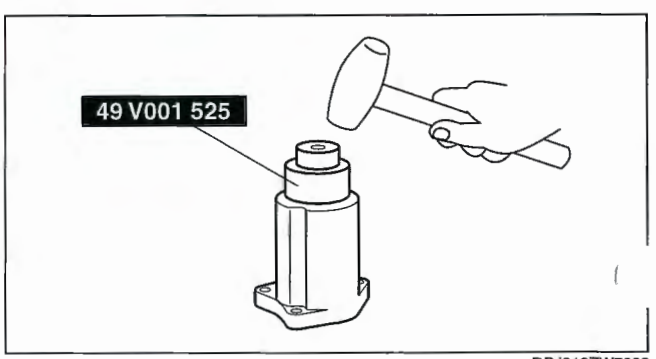

DPJ313ZW7002

Joint Shaft Assembly Note

1. Install the joint shaft using a press and the **SST**.

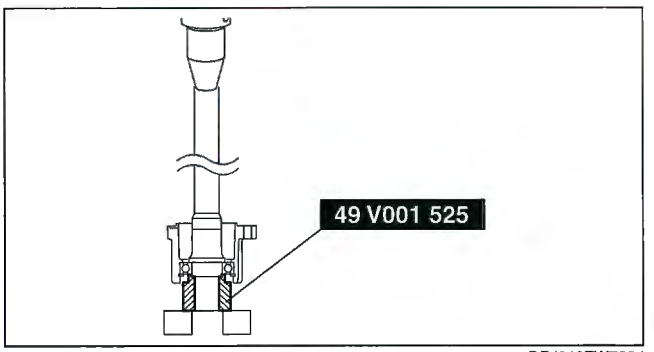

DPJ313ZW7004

Dust Seal Assembly Note

1. Apply grease to the new dust seal lip.
2. Install the new dust seal using a press and the **SST**.

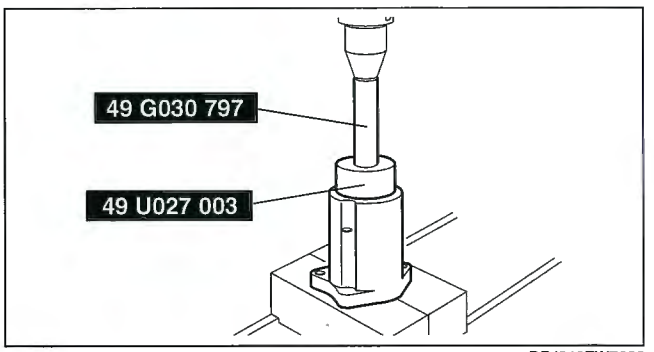

DPJ313ZW7003

FRONT DRIVE SHAFT PRE-INSPECTION

Inspect the dust boot on the drive shaft for cracks, damage, leaking grease, and looseness in the boot band.

2. Inspect the drive shaft for bends, cracks, and wear in the joint or splines.
   - Repair or replace the drive shaft or boot/band as necessary.

E6U031325501W01

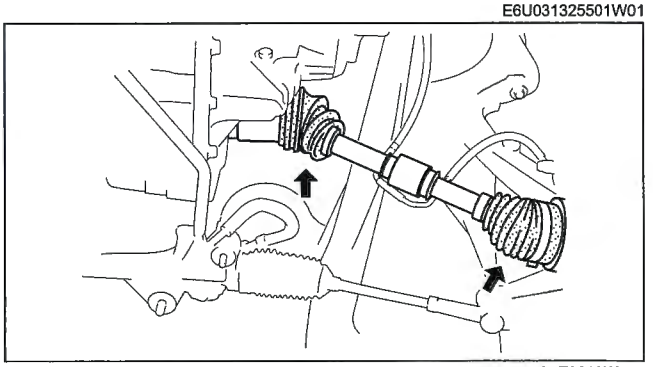

A6E0313W033

FRONT DRIVE SHAFT REMOVAL/INSTALLATION [L3, L3 WITH TC]

E6U031325501W02

Caution

- **Performing the following procedures without first removing the ABS wheel-speed sensor may possibly cause an open circuit in the harness if it is pulled by mistake. Before performing the following procedures, remove the ABS wheel-speed sensor (axle side) and fix it to an appropriate place where the sensor will not be pulled by mistake while the vehicle is being serviced.**

1. Drain the transaxle oil (left side). (See 05–17A–12 AUTOMATIC TRANSAXLE FLUID (ATF) REPLACEMENT [FS5A-EL].) (See 05–15A–2 TRANSAXLE OIL REPLACEMENT [G35M-R].) (See 05–15C–2 TRANSAXLE OIL REPLACEMENT [A26MX-R])
2. Remove in the order indicated in the table.
3. Install in the reverse order of removal.

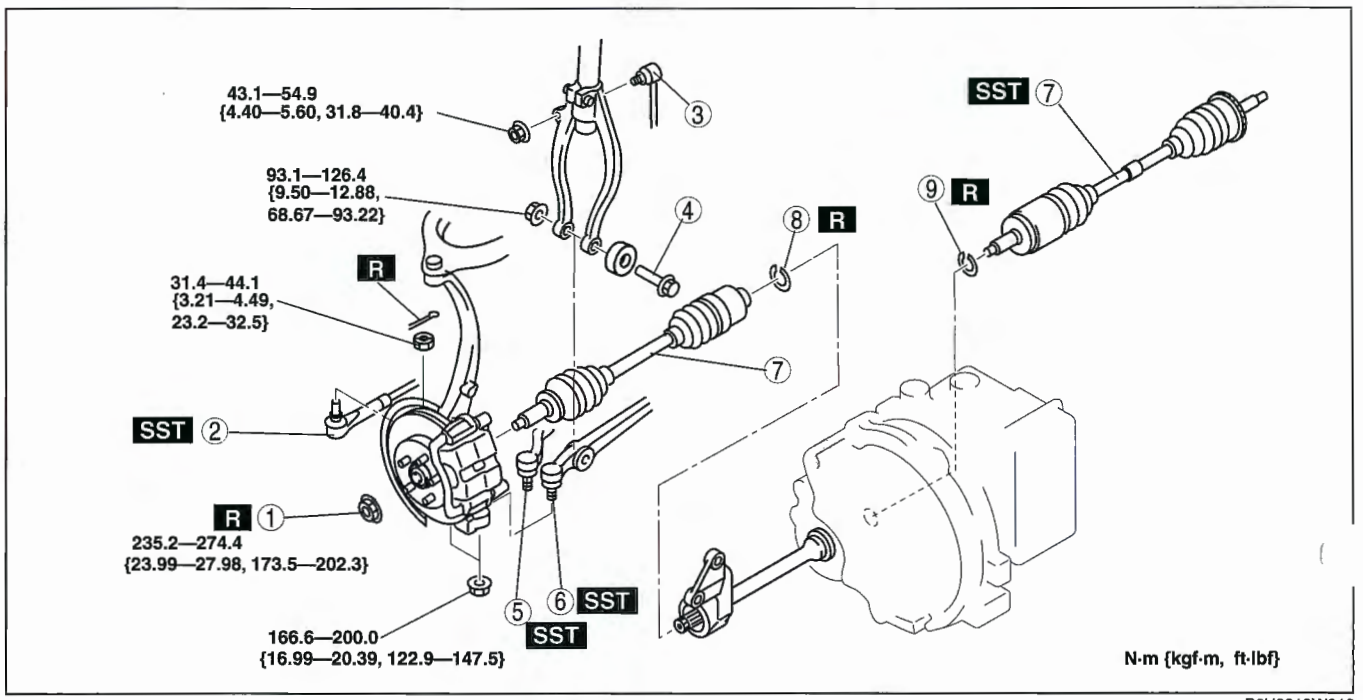

B6U0313W010

1	Locknut (See 03–11–4 Locknut Removal Note.) (See 03–11–7 Locknut Installation Note.)
2	Tie-rod end ball joint (See 06–12–12 Tie-rod End Ball Joint Removal Note.)
3	Front stabilizer control link (See 02–13–18 FRONT STABILIZER REMOVAL/ INSTALLATION.)
4	Bolt
5	Front lower arm (rear) ball joint (See 02–13–11 Front Lower Arm (Front) Ball Joint Removal Note.)
6	Front lower arm (front) ball joint (See 02–13–11 Front Lower Arm (Front) Ball Joint Removal Note.)
7	Drive shaft (See 03–13–17 Drive Shaft Removal Note.) (See 03–13–18 Drive Shaft Installation Note.)
8	Clip (right side) (See 03–13–4 Clip Installation Note.) (See 03–13–8 Clip Installation Note)
9	Clip (left side) (See 03–13–18 Clip Installation Note.)

Drive Shaft Removal Note

1. Install a spare nut onto the drive shaft so that the nut is flush with the end of the drive shaft.
2. Tap the nut with a copper hammer to loosen the drive shaft from the front wheel hub.
. Separate the drive shaft from the wheel hub.

Caution

- **The sharp edges of the drive shaft can slice or puncture the oil seal. Be careful when removing the drive shaft from the transaxle.**

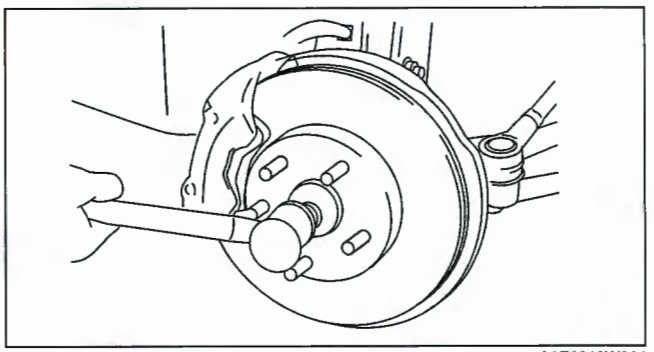

A6E6316W001

4. Separate the left side drive shaft from the transaxle by prying with a bar inserted between the outer ring and the transaxle, as shown in the figure.

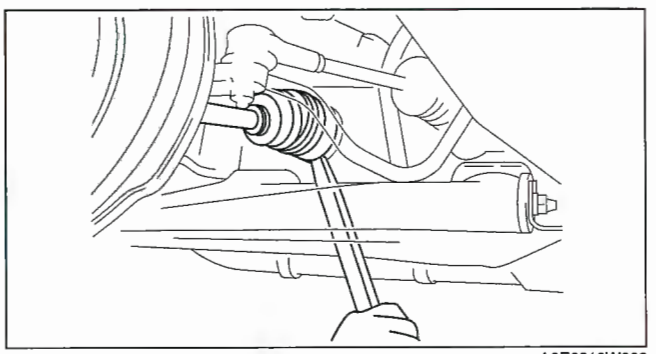

A6E6316W002

5. Separate the right side drive shaft from the joint shaft by tapping on a bar inserted between them.

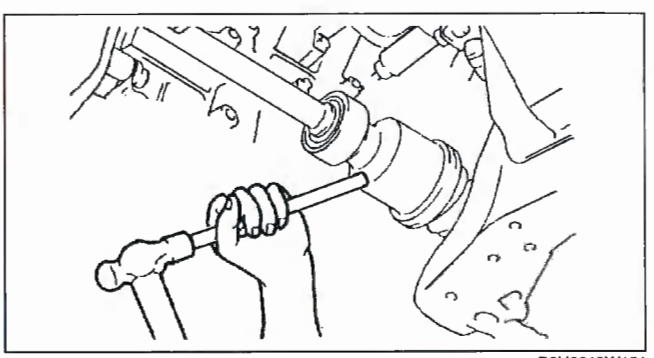

B6U0313W151

6. Install the **SST** into the transaxle to hold the side gears after the drive shaft is removed.

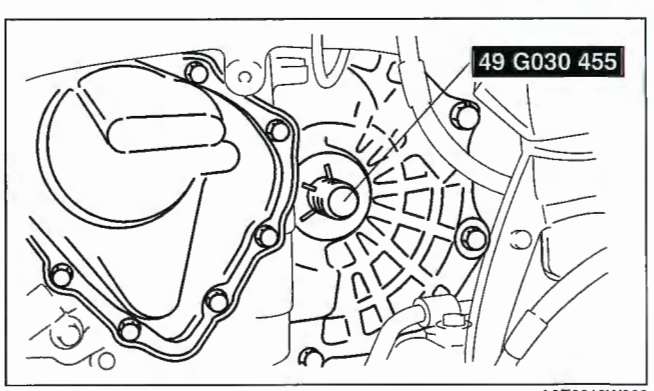

A6E0313W038

Clip Installation Note

1. Install a new clip onto the drive shaft with the opening facing upward. Ensure that the diameter of the clip does not exceed the specification on installation.
2. After installation, measure the outer diameter. If it exceeds the specification, repeat Steps 1—2 using a new clip.

Outer diameter specification
L3: 30.0—31.2 mm {1.19—1.23 in}
L3 with TC: 34.0 mm {1.34 in}

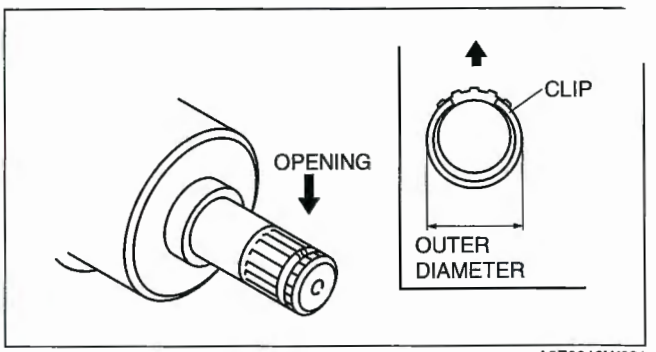

A6E0313W021

Drive Shaft Installation Note

Caution

- **The sharp edges of the drive shaft can slice or puncture the oil seal. Be careful when installing the drive shaft to the transaxle.**
- **The oil seals are damaged easily if this procedure is not done correctly.**

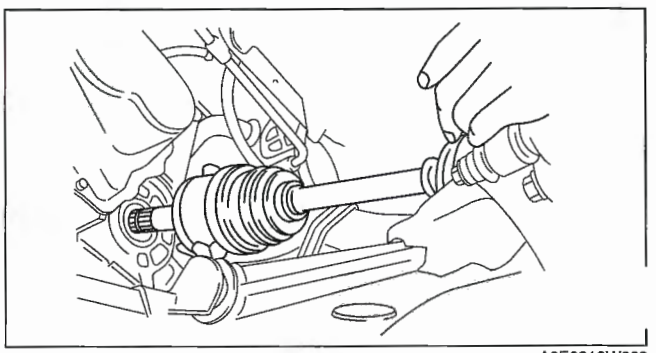
A6E6316W003

Left side

1. Insert the drive shaft into the wheel hub.
2. Apply transaxle oil to the oil seal lip.
3. Push the drive shaft into the transaxle.
4. After installation, pull the transaxle side outer ring forward to confirm that the drive shaft is securely held by the clip.

Right side

1. Insert the drive shaft into the wheel hub.
2. Insert the drive shaft into the joint shaft.
3. After installation, pull the transaxle side outer ring forward to confirm that the drive shaft is securely held by the clip.

FRONT DRIVE SHAFT REMOVAL/INSTALLATION [AJ]

E6U031325501W03

Caution

- **Performing the following procedures without first removing the ABS wheel-speed sensor could cause an open circuit in the harness if it is pulled by mistake. Before performing the following procedures, remove the ABS wheel-speed sensor (axle side) and fix it to an appropriate place where the sensor will not be pulled by mistake while servicing the vehicle.**
- **Removing the right side drive shaft with the shaft bracket installed may cause the deformation of the joint shaft bracket. Therefore, remove/install the right side drive shaft and joint shaft as a component.**

1. Drain the transaxle oil. (MTX only) (See 05–15B–2 TRANSAXLE OIL REPLACEMENT [A65M-R].)
2. Remove the steering knuckle, wheel hub and dust cover component. (Right side) (See 03–11–3 WHEEL HUB, STEERING KNUCKLE REMOVAL/INSTALLATION.)
3. Remove in the order indicated in the table.
4. Install in the reverse order of removal.

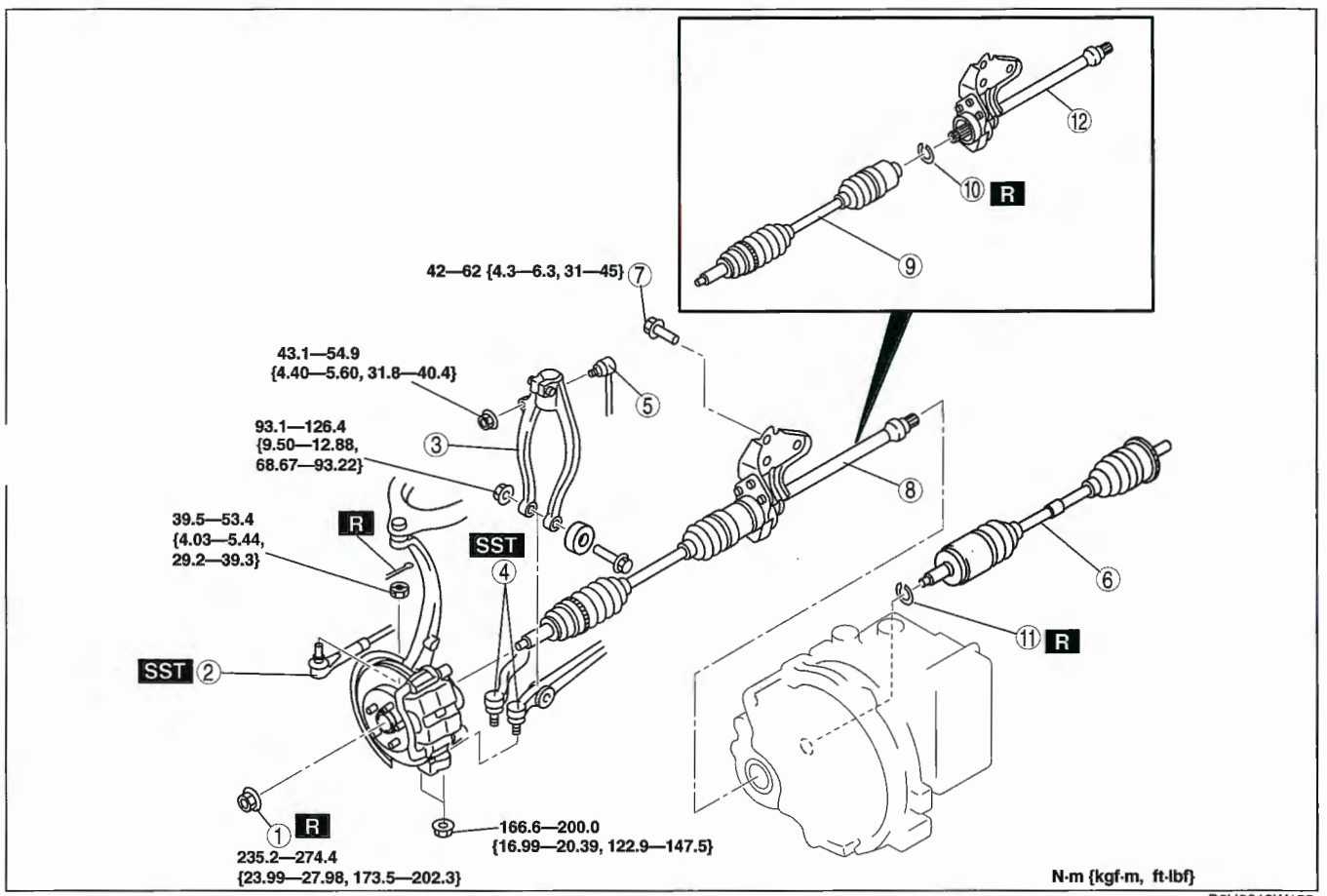

B6U0313W152

1	Locknut (See 03–11–4 Locknut Removal Note.) (See 03–11–7 Locknut Installation Note.)
2	Tie-rod end (See 06–12–12 Tie-rod End Ball Joint Removal Note.)
3	Damper fork
4	Lower arm (front, rear) ball joint (See 02–13–11 Front Lower Arm (Front) Ball Joint Removal Note.)
5	Stabilizer control link
6	Drive shaft (left side) (See 03–13–20 Drive Shaft (Left Side) Removal Note.) (See 03–13–21 Drive Shaft (Left Side) Installation Note.)

7	Joint shaft bracket bolt
8	Drive shaft (right side) and joint shaft (See 03–13–6 Drive Shaft And Joint Shaft Removal Note.) (See 03–13–7 Drive Shaft And Joint Shaft Installation Note.)
9	Drive shaft (right side) (See 03–13–20 Drive Shaft (Right Side) Removal Note.)
10	Clip (right side) (See 03–13–6 Clip Installation Note.)
11	Clip (left side) (See 03–13–21 Clip Installation Note.)
12	Joint shaft (See 03–13–20 Joint Shaft Installation Note.)

Drive Shaft (Left Side) Removal Note

1. Install a spare nut onto the drive shaft so that the nut is flush with the end of the drive shaft.
2. Tap the nut with a copper hammer to loosen the drive shaft from the front wheel hub.
3. Separate the drive shaft from the wheel hub.

Caution

- **The sharp edges of the drive shaft can slice or puncture the oil seal. Be careful when removing the drive shaft from the transaxle.**

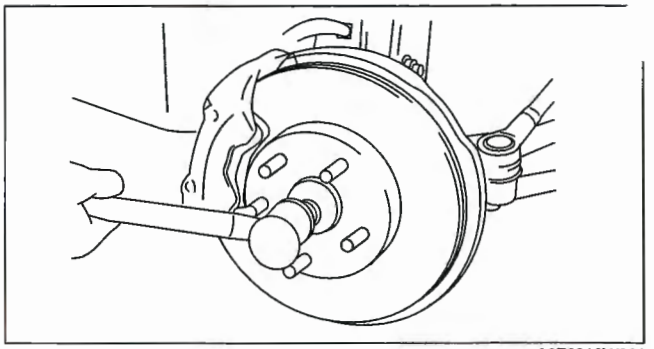

A6E6316W001

4. Separate the left side drive shaft from the transaxle by prying with a bar inserted between the outer ring and the transaxle, as shown in the figure.

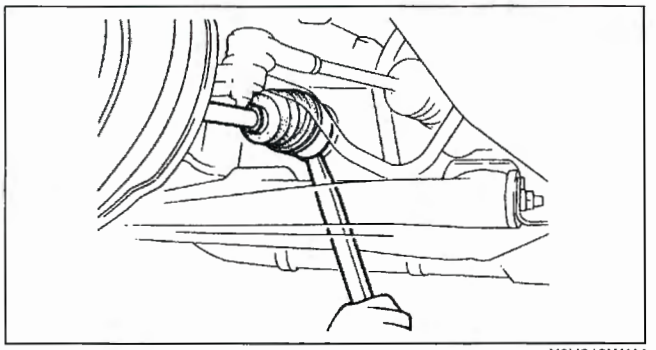

X3U313WAM

Drive Shaft (Right Side) Removal Note

1. Secure the shaft portion of the joint shaft in a vise.
2. As shown in the figure, insert a pry bar between the drive shaft and the joint shaft and tap on the bar to uncouple them.

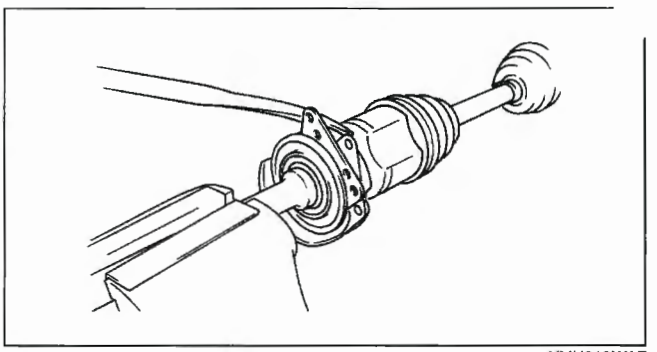

YMU313WAF

Joint Shaft Installation Note

1. Secure the shaft portion of the drive shaft in a vise.
2. Install the joint shaft using a plastic hammer as shown.

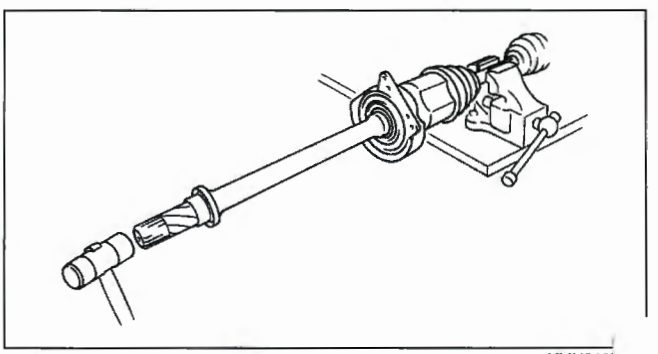

YMU313\

Clip Installation Note

1. Install a new clip onto the drive shaft with the opening facing upward. Ensure that the diameter of the clip does not exceed the specification on installation.
   After installation, measure the outer diameter. If it exceeds the specification, repeat steps 1—2 using a new clip.

   Outer diameter specification
   MTX: 32.1—33.2 mm {1.27—1.30 in}
   ATX: 33.1—34.0 mm {1.31—1.33 in}

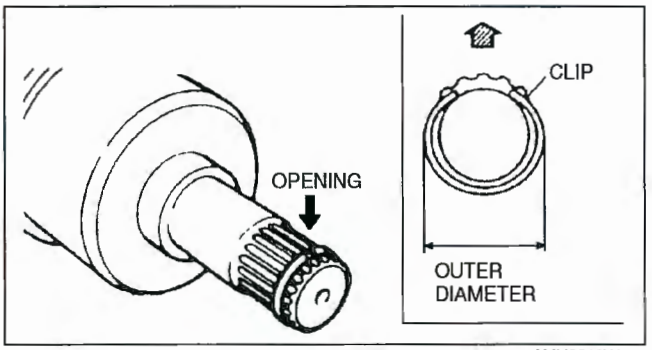

AMU0313W005

Drive Shaft (Left Side) Installation Note

1. Insert the drive shaft into the wheel hub.
2. Apply ATF to the oil seal lip.
3. Push the drive shaft into the transaxle.

   Caution
   - **The sharp edges of the drive shaft can slice or puncture the oil seal. Be careful when installing the drive shaft to the transaxle.**
   - **The oil seals are damaged easily if this procedure is not done correctly.**

4. After installation, pull the transaxle side outer ring forward to confirm that the drive shaft is securely held by the clip.

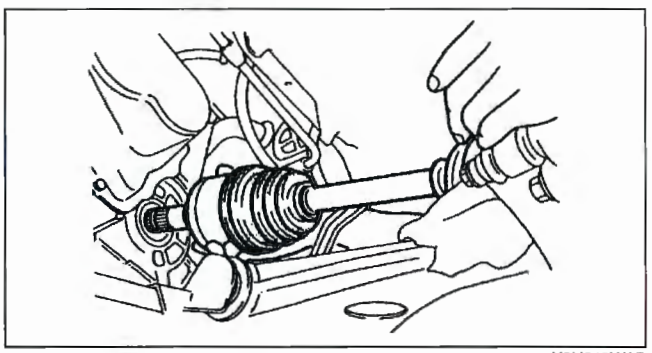
X3U313WAR

FRONT DRIVE SHAFT DISASSEMBLY/ASSEMBLY [ATX]

E6U031325501W04

1. Disassemble in the order indicated in the table.
2. Assemble in the reverse order of disassembly.

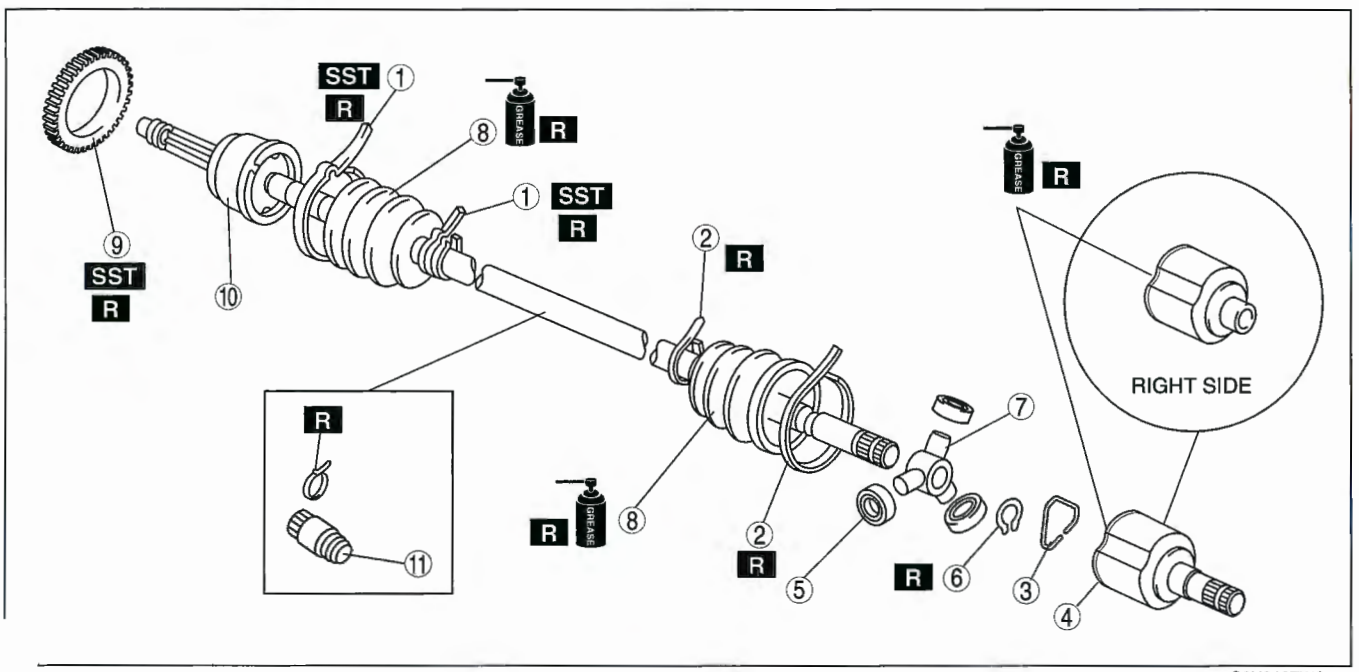

C6U313ZWC001

1	Boot band (wheel side) (See 03–13–22 Boot Band (Wheel Side) Disassembly Note.) (See 03–13–26 Boot Band (Wheel Side) Assembly Note.)
2	Boot band (transaxle side) (See 03–13–22 Boot Band (Transaxle Side) Disassembly Note.) (See 03–13–26 Boot Band (Transaxle Side) Assembly Note.)
3	Clip
4	Outer ring (See 03–13–23 Outer Ring Disassembly Note.) (See 03–13–25 Outer Ring Assembly Note.)
5	Roller cassette
6	Snap ring (See 03–13–23 Snap Ring, Tripod Joint Disassembly Note.) (See 03–13–25 Tripod Joint, Snap Ring Assembly Note.)
7	Tripod joint (See 03–13–23 Snap Ring, Tripod Joint Disassembly Note.) (See 03–13–25 Tripod Joint, Snap Ring Assembly Note.)
8	Boot (See 03–13–23 Boot Disassembly Note.) (See 03–13–24 Boot Assembly Note.)
9	ABS sensor rotor (with ABS) (See 03–13–24 ABS Sensor Rotor (With ABS) Disassembly Note.) (See 03–13–24 ABS Sensor Rotor (With ABS) Assembly Note.)
10	Shaft and ball joint component
11	Dynamic damper (See 03–13–24 Dynamic Damper Assembly Note.)

Boot Band (Wheel Side) Disassembly Note

Note
- The boot band does not need to be removed unless it is being replaced.

1. Remove the boot clamp with end clamp pliers as shown and discard the clamp.

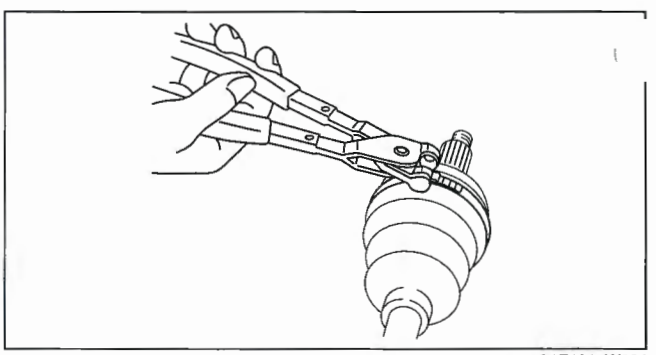

A6E6316W004

Boot Band (Transaxle Side) Disassembly Note
1. Pry up the locking clips using a screwdriver.
2. Pull back the end of the band.

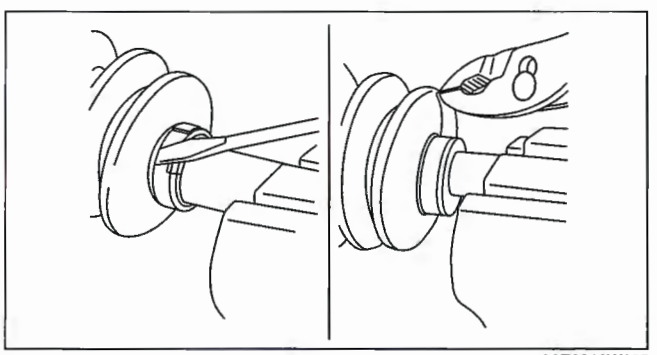

A6E6316W005

Outer Ring Disassembly Note

1. Mark the outer ring and the shaft for proper assembly.

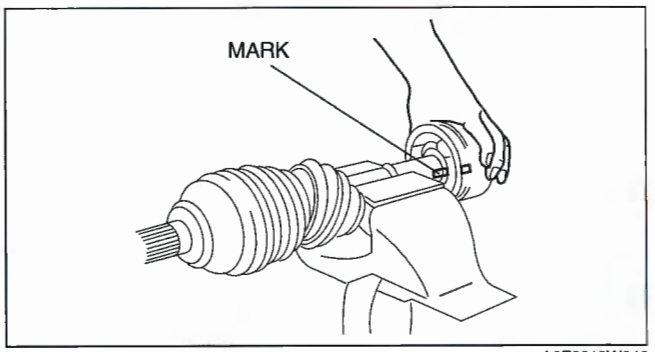

A6E0313W046

2. Remove the clip.
3. Remove the outer ring.

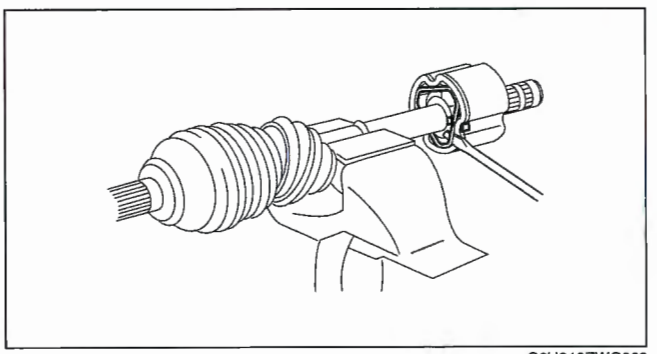

C6U313ZWC002

Snap Ring, Tripod Joint Disassembly Note

1. Mark the shaft and tripod joint for proper assembly.
2. Remove the snap ring using snap-ring pliers. Remove the tripod joint from the shaft.

Caution

- **Do not tap the tripod joint with a hammer.**

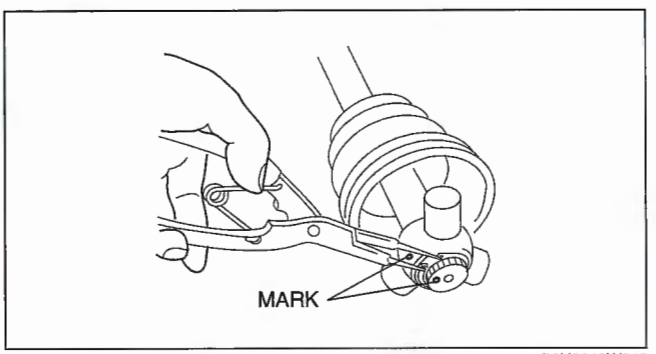

B6U0313W012

Boot Disassembly Note

Note

- The wheel side boot does not need to be removed unless replacing it or the ball joint and shaft component.
- Do not strip the tape until the boot is assembled.

1. Wrap the shaft splines with tape.
2. Remove the boot.

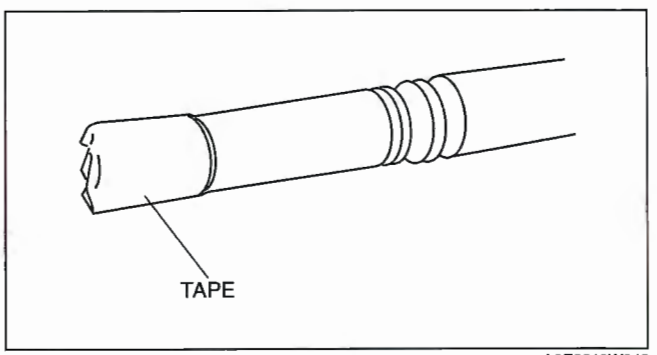

A6E0313W048

ABS Sensor Rotor (With ABS) Disassembly Note

Caution
- **Do not remove the sensor rotor unless it is necessary.**
- **Do not reuse the sensor rotor if removed.**

1. Tap the ABS sensor rotor off the drive shaft using a chisel.

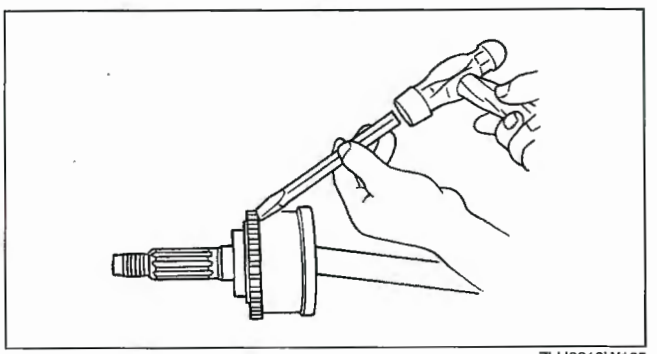
ZLU0313W105

Dynamic Damper Assembly Note

1. Install the dynamic damper as shown in the figure.

   Standard length
   287.7—293.7 mm {11.33—11.56 in}

2. Install the new boot band onto the dynamic damper.

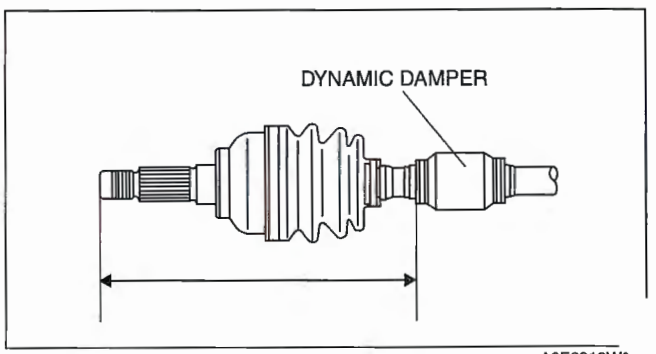

A6E6316W0

ABS Sensor Rotor (With ABS) Assembly Note

1. Set a new ABS sensor rotor on the drive shaft and press it on using the **SSTs.**

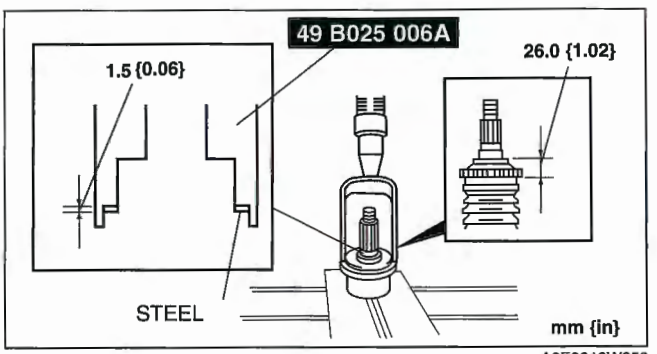

A6E0313W050

Boot Assembly Note

Note
- The wheel side and transaxle side boots are different.

1. Fill the boot (wheel side) with the specified grease.

Caution
- **Do not touch grease with your hand. Apply it from the tube to prevent foreign matter from entering the boot.**

Grease amount
L3: 85—105 g {3.00—3.70 oz}
AJ: 100—120 g {3.53—4.23 oz}

2. With the splines of the shaft still wrapped in tape from disassembly, install the boot.
3. Remove the tape.

Tripod Joint, Snap Ring Assembly Note

1. Align the marks and install the tripod joint using a bar and a hammer.
2. Install the new snap ring using snap-ring pliers.

Caution

- **Be sure the snap ring engages correcting in the groove of the shaft.**

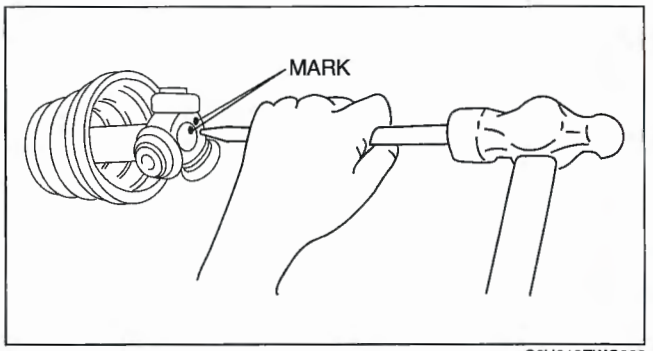

C6U313ZWC003

Outer Ring Assembly Note

1. Fill the outer ring and boot (transaxle side) with the specified grease.

Caution

- **Do not touch grease with your hand. Apply it from the tube to prevent foreign matter from entering the boot.**

Grease amount

200—220 g {7.06—7.76 oz}

2. Install the roller cassettes.
3. Align the marks, and install the outer ring on to the shaft.
4. Install a new clip.
   Install the boot.
5. Set the drive shaft to the standard length.

Front drive shaft length (ATX)

L3 (LH): 674.1—684.1 mm {26.54—26.93 in}
L3 (RH): 630.4—640.4 mm {24.82—25.21 in}
AJ (LH): 617.7—627.7 mm {24.32—24.71 in}
AJ (RH): 597.4—607.4 mm {23.52—23.91 in}

7. Release any trapped air from the boots by carefully lifting up the small end of each boot with a cloth- wrapped flathead screwdriver.

Caution

- **Do not let grease leak.**
- **Do not damage the boot.**

8. Verify that the drive shaft length is within the standard.

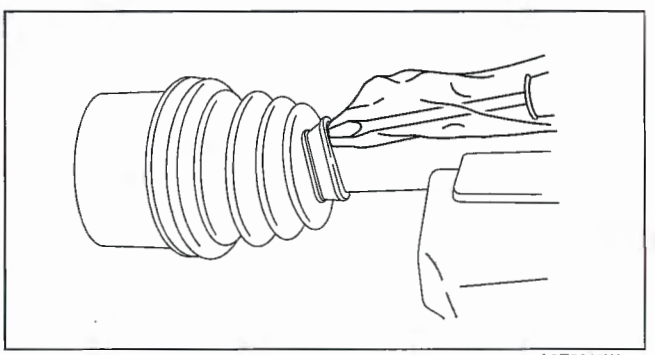

A6E6316W007

Boot Band (Transaxle Side) Assembly Note

1. Fold the band in the direction opposite to the forward revolving direction of the drive shaft and use pliers to pull it tight.
2. Lock the end of the band by bending the locking clips.

Caution
- **Install the band into the groove securely.**

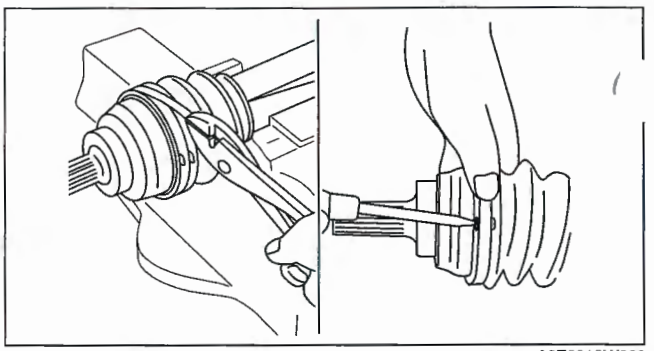
A6E6316W008

Boot Band (Wheel Side) Assembly Note

1. Adjust clearance A by turning the adjusting bolt of the **SST**.

Clearance A
2.9 mm {0.11 in}

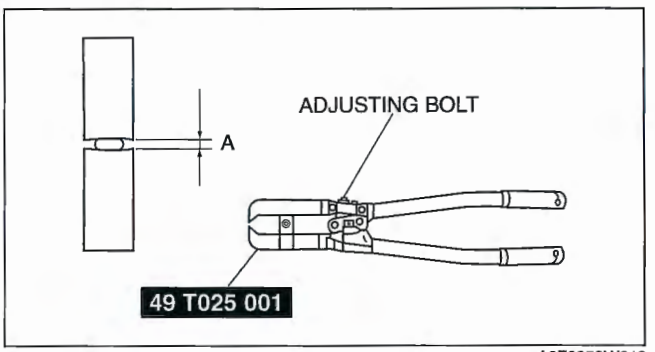

A6E0350W012

2. Crimp the wheel side small boot band using the **SST**. Verify that clearance B is within the specification.
   - If clearance B is more than the specification, reduce clearance A of the **SST** and crimp the boot again.
   - If clearance B is less than the specification, replace the boot band, increase clearance A of the **SST**, and crimp the new boot.

Clearance B
2.4—2.8 mm {0.095—0.110 in}

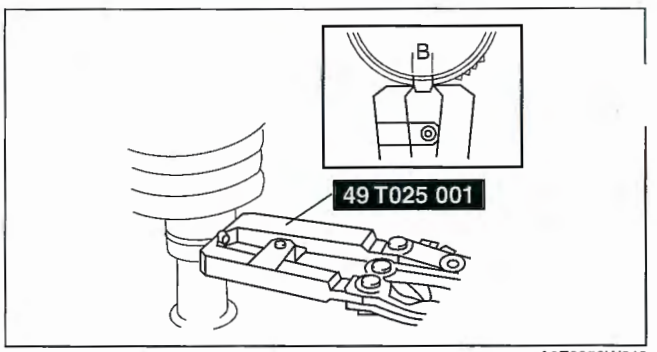

A6E0350W013

3. Verify that the boot band does not protrude from the boot band installation area.
   - If it does, replace the boot band and repeat Steps 2 and 3.
4. Fill the boot with the repair kit grease.
5. Adjust clearance A by turning the adjusting bolt of the **SST**.

Clearance A
3.2 mm {0.13 in}

6. Crimp the wheel side big boot band using the **SST**.
7. Verify that clearance B is within the specification.
   - If clearance B is more than the specification, reduce clearance A of the **SST** and crimp the boot again.
   - If clearance B is less than the specification, replace the boot band, increase clearance A of the **SST** and crimp the new boot.

Clearance B
2.4—2.8 mm {0.095—0.110 in}

8. Verify that the boot band does not protrude from the boot band installation area.
   - If it does, replace the boot band and repeat Steps 7 and 8.

FRONT DRIVE SHAFT DISASSEMBLY/ASSEMBLY [MTX]

E6U031325501W05

1. Disassemble in the order indicated in the table.
2. Assemble in the reverse order of disassembly.

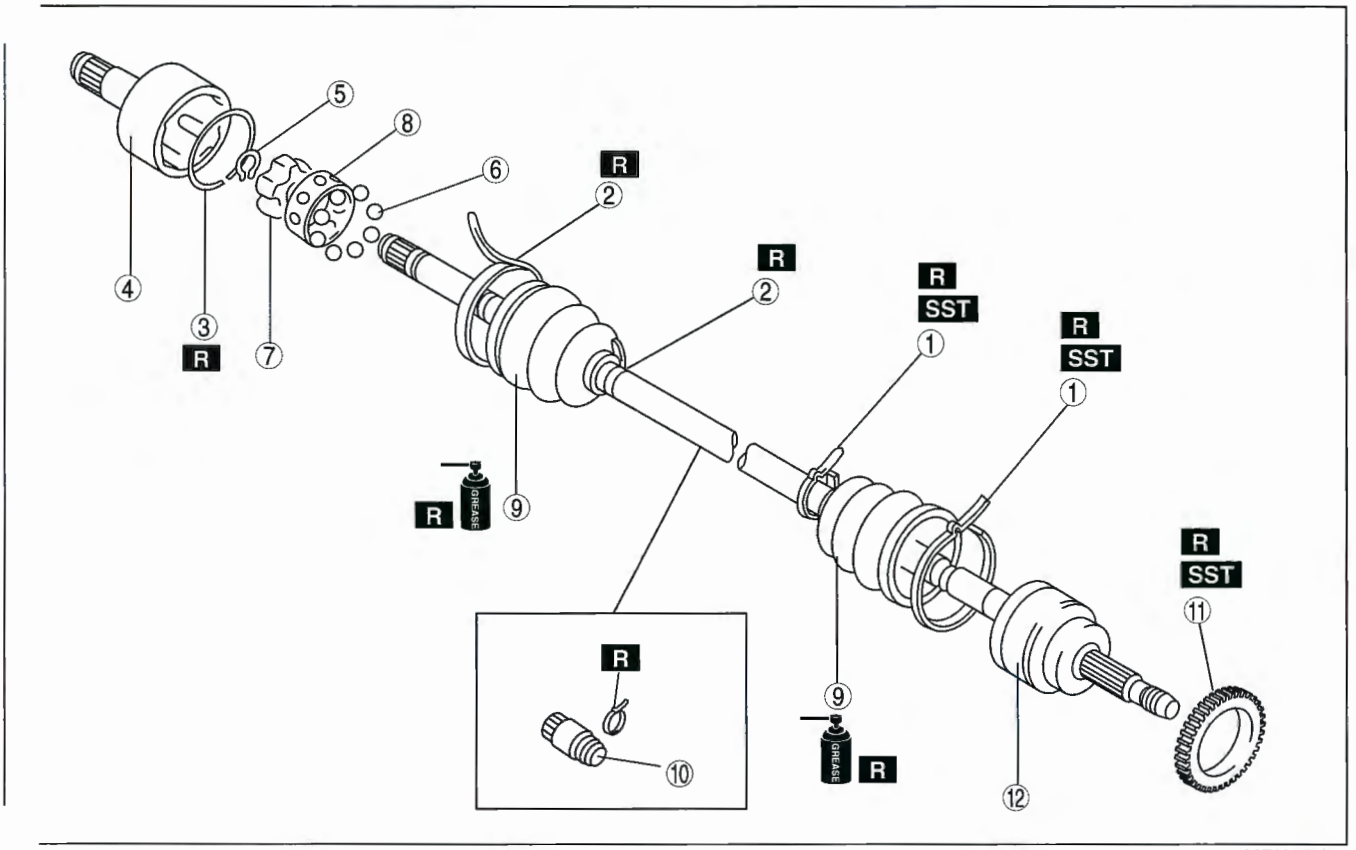

A6E6316W009

1	Boot band (wheel side) (See 03–13–22 Boot Band (Wheel Side) Disassembly Note.) (See 03–13–26 Boot Band (Wheel Side) Assembly Note.)
2	Boot band (transaxle side) (See 03–13–22 Boot Band (Transaxle Side) Disassembly Note.) (See 03–13–26 Boot Band (Transaxle Side) Assembly Note.)
3	Clip (See 03–13–28 Clip Disassembly Note.) (See 03–13–29 Outer Ring, Clip Assembly Note.)
4	Outer ring (See 03–13–29 Outer Ring, Clip Assembly Note.)
5	Snap ring (See 03–13–29 Cage, Inner Ring, Balls, Snap Ring Assembly Note.)
6	Balls (See 03–13–28 Balls, Inner Ring, Cage Disassembly Note.) (See 03–13–29 Cage, Inner Ring, Balls, Snap Ring Assembly Note.)
7	Inner Ring (See 03–13–28 Balls, Inner Ring, Cage Disassembly Note.) (See 03–13–29 Cage, Inner Ring, Balls, Snap Ring Assembly Note.)
8	Cage (See 03–13–28 Balls, Inner Ring, Cage Disassembly Note.) (See 03–13–29 Cage, Inner Ring, Balls, Snap Ring Assembly Note.)
9	Boot (See 03–13–28 Boot Assembly Note.)
10	Dynamic damper (See 03–13–28 Dynamic Damper Assembly Note.)
11	ABS sensor rotor (See 03–13–24 ABS Sensor Rotor (With ABS) Disassembly Note.) (See 03–13–24 ABS Sensor Rotor (With ABS) Assembly Note.)
12	Shaft and ball joint component

Clip Disassembly Note

1. Mark the drive shaft and outer ring for proper assembly.

   Caution
   - **Mark with paint; do not use a punch.**

2. Remove the clip.

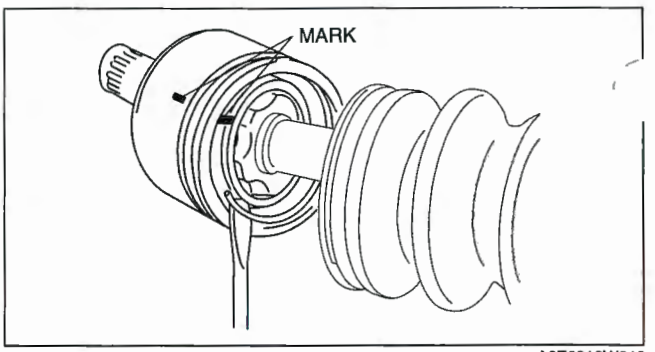

A6E6316W010

Balls, Inner Ring, Cage Disassembly Note

1. Mark the inner ring and cage.

   Caution
   - **Mark with paint; do not use a punch.**

2. Remove the snap ring using snap-ring pliers.
3. Turn the cage **approximately 22.5 degree** and pull the cage and balls away from the inner ring.

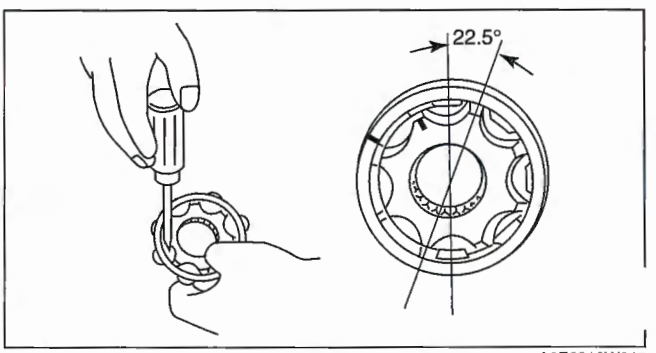

A6E6316W015

Dynamic Damper Assembly Note

1. Install the dynamic damper as shown in the figure.

   Standard length
   L3: 287.7—293.7 mm {11.33—11.56 in}
   L3 with TC: 290.7—298.7 mm {11.45—11.75 in}

2. Install the new boot band onto the dynamic damper.

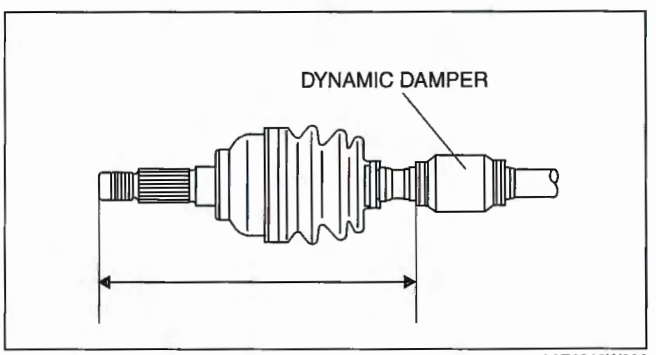

A6E6316W006

Boot Assembly Note

Note
- The wheel side and transaxle side boots are different.

1. Fill the boot (wheel side) with the specified grease.

   Caution
   - **Do not touch grease with your hand. Apply it from the tube to prevent foreign matter from enteri the boot.**

Grease amount
L3: 100—120 g {3.53—4.23 oz}
L3 with TC: 110—130 g {3.89—4.58 oz}

2. With the splines of the shaft still wrapped in tape from disassembly, install the boot.
3. Remove the tape.

'ge, Inner Ring, Balls, Snap Ring Assembly Note

. Align the marks and install the balls and cage to the inner ring in the direction shown in the figure.

Caution
- **Install the cage with the offset facing the snap ring groove. If incorrectly installed, the drive shaft may become disengaged.**

2. Install a new snap ring.

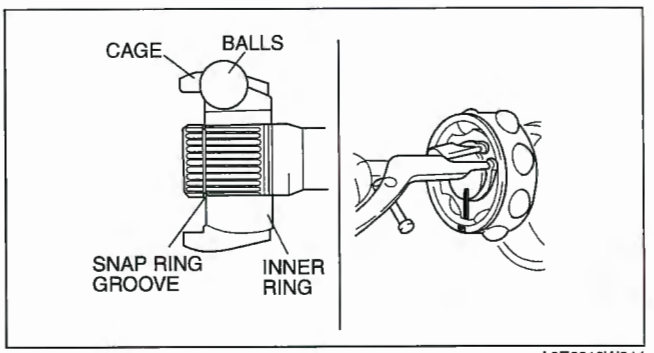

A6E6316W011

Outer Ring, Clip Assembly Note

1. Fill the outer ring and boot (transaxle side) with the specified grease.

Caution
- **Do not touch grease with your hand. Apply it from the tube to prevent foreign matter from entering the boot.**

Grease amount
L3: 120—140 g {4.24—4.94 oz}
L3 with TC: 135—155 g {4.77—5.47 oz}

2. Align the marks, and install the outer ring on to the shaft.
3. Install a new clip.
   Install the boot.
. Set the drive shaft to the standard length.

Front Drive shaft length (MTX)
L3 (LH): 676.6—686.6 mm {26.64—27.03 in}
L3 (RH): 628.6—638.6 mm {24.75—25.14 in}
AJ (LH): 664.6—674.6 mm {26.17—26.55 in}
AJ (RH): 595.9—605.9 mm {23.47—23.85 in}
L3 with TC (LH): 640.4—650.4 mm {25.22—25.60 in}
L3 with TC (RH): 584.1—594.1 mm {23.00—23.38 in}

6. Release any trapped air from the boots by carefully lifting up the small end of each boot with a cloth wrapped screwdriver.

Caution
- **Be careful not to allow the grease to leak.**
- **Do not damage the boot.**

7. Verify that the drive shaft length is within the specification.

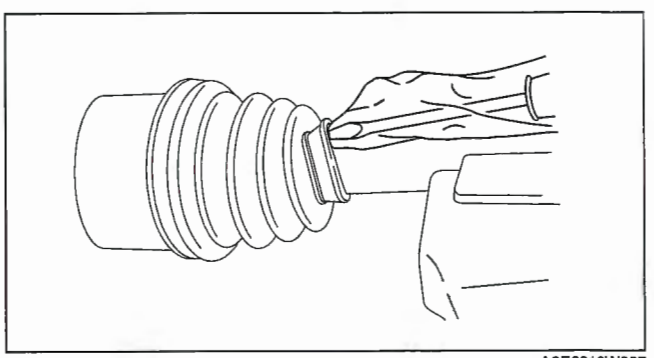
A6E6316W007

REAR DRIVE SHAFT PRE-INSPECTION

E6U031325600W01

1. Inspect each connecting part for looseness.
   - Tighten or replace parts if necessary.
2. Inspect the dust boot on the drive shaft for cracks, damage, leaking grease, and looseness in the boot band.
3. Inspect the drive shaft for bends, cracks, and wear in the joints or splines.
   - Repair or replace the drive shaft or boot band if necessary.

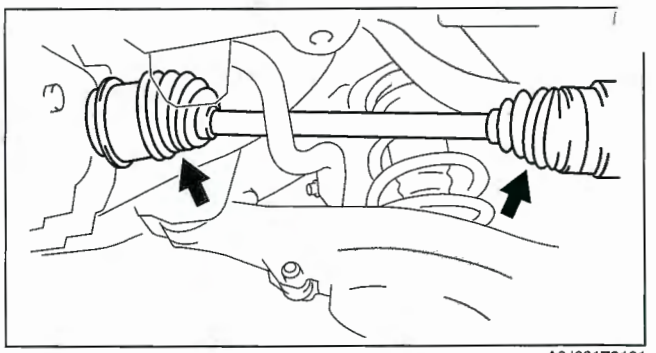

A6J63172101

REAR DRIVE SHAFT REMOVAL/INSTALLATION

E6U031325600W02

Caution

- **Performing the following procedures without first removing the ABS wheel-speed sensor may possibly cause an open circuit in the harness if it is pulled by mistake. Before performing the following procedures, remove the ABS wheel-speed sensor (wheel side) and fix it to an appropriate place where the sensor will not be pulled by mistake while the vehicle is being serviced.**

1. Drain the rear differential oil into a container. (See 03–14–2 DIFFERENTIAL OIL REPLACEMENT.)
2. Remove in the order indicated in the table.
3. Install in the reverse order of removal.

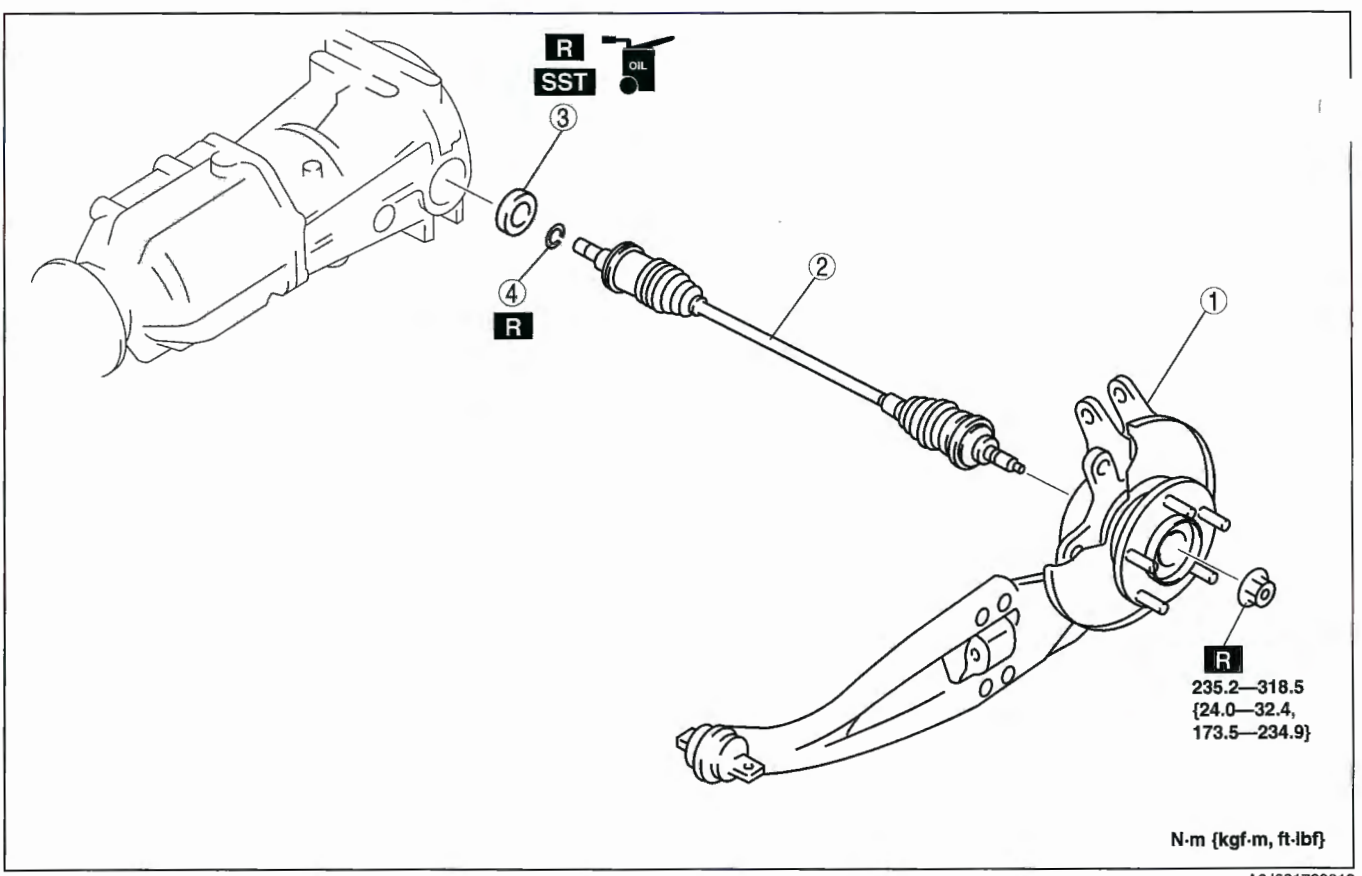

A6J631720012

1	Trailing link, knuckle component (See 03–12–5 WHEEL HUB, KNUCKLE REMOVAL/INSTALLATION [AWD])
2	Rear drive shaft (See 03–13–31 Rear Drive Shaft Removal Note)
3	Oil seal (See 03–14–3 OIL SEAL (SIDE GEAR) REPLACEMENT)
4	Clip (See 03–13–31 Clip Installation Note)

Rear Drive Shaft Removal Note

1. Deform the metal cover of the oil seal using a bar, and disengage the drive shaft.

Note

- Oil seal cannot be reused. Always replace the oil seal with a new one.

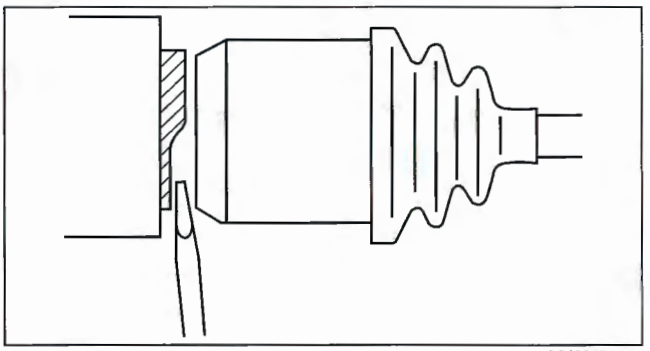

A6J63172201

Clip Installation Note

1. Install a new clip onto the joint shaft with the opening facing upward. Ensure that the diameter of the clip does not exceed the specification on installation.
2. After installation, measure the outer diameter. If it exceeds the specification, repeat Steps 1—2 using a new clip.

Outer diameter specification
26.0 mm {1.02 in} max.

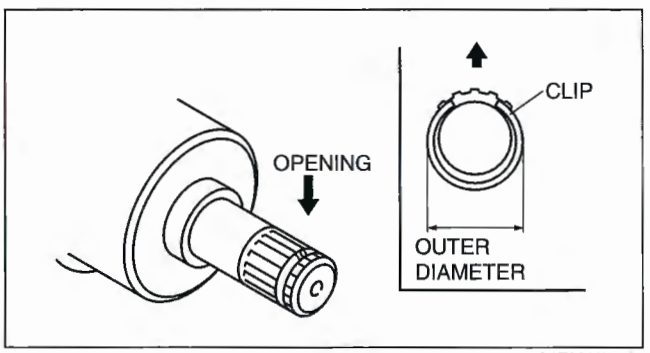

A6E0313W021

REAR DRIVE SHAFT DISASSEMBLY/ASSEMBLY

E6U031325600W03

1. Disassemble in the order indicated in the table.
2. Assemble in the reverse order of disassembly.

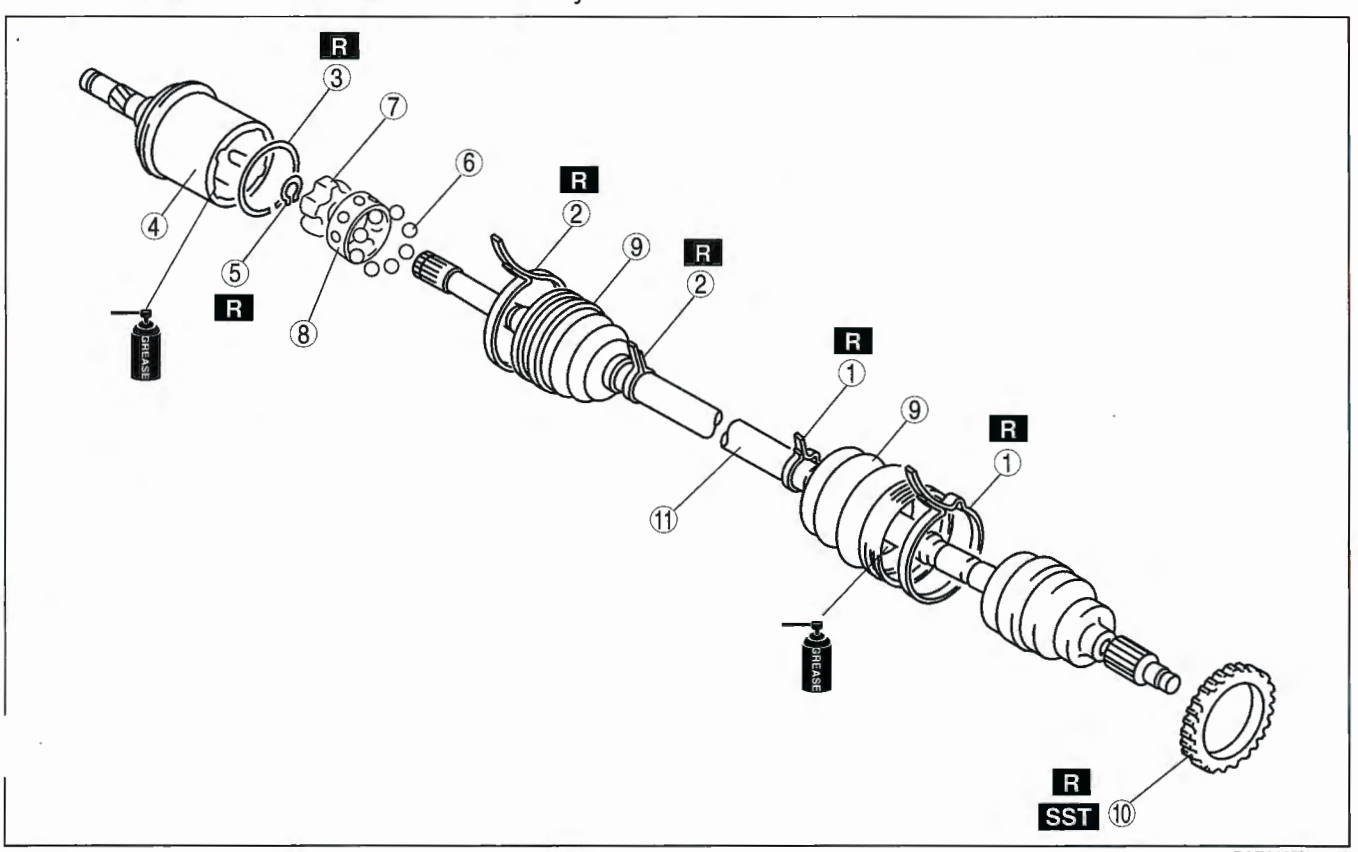

D6E313ZW3019

1	Boot band (wheel side) (See 03–13–22 Boot Band (Wheel Side) Disassembly Note) (See 03–13–26 Boot Band (Wheel Side) Assembly Note)
2	Boot band (differential side) (See 03–13–22 Boot Band (Transaxle Side) Disassembly Note) (See 03–13–26 Boot Band (Transaxle Side) Assembly Note)
3	Clip (See 03–13–32 Clip Disassembly Note) (See 03–13–34 Outer Ring, Clip Assembly Note)
4	Outer ring (See 03–13–34 Outer Ring, Clip Assembly Note)
5	Snap ring (See 03–13–32 Snap Ring Disassembly Note) (See 03–13–34 Cage, Inner Ring, Balls, Snap Ring Assembly Note)
6	Balls (See 03–13–33 Balls, Inner Ring, Cage Disassembly Note) (See 03–13–34 Cage, Inner Ring, Balls, Snap Ring Assembly Note)
7	Inner Ring (See 03–13–33 Balls, Inner Ring, Cage Disassembly Note) (See 03–13–34 Cage, Inner Ring, Balls, Snap Ring Assembly Note)
8	Cage (See 03–13–33 Balls, Inner Ring, Cage Disassembly Note) (See 03–13–34 Cage, Inner Ring, Balls, Snap Ring Assembly Note)
9	Boot (See 03–13–33 Boot Assembly Note)
10	ABS sensor rotor (See 03–13–24 ABS Sensor Rotor (With ABS) Disassembly Note) (See 03–13–33 ABS Sensor Rotor Assembly Note)
11	Drive shaft, joint component

Clip Disassembly Note

1. Mark the drive shaft and outer ring for proper assembly.

   Caution
   - **Mark with paint; do not use a punch.**

2. Remove the clip.

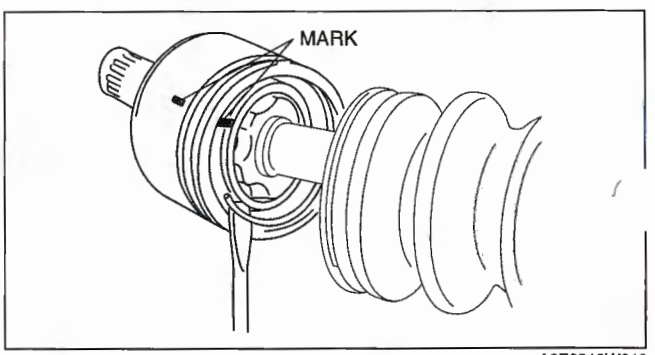

A6E6316W010

Snap Ring Disassembly Note

1. Mark the drive shaft end and inner ring for proper reassembly.

   Caution
   - **Mark with paint; do not use a punch.**

2. Remove the snap ring using snap-ring pliers.

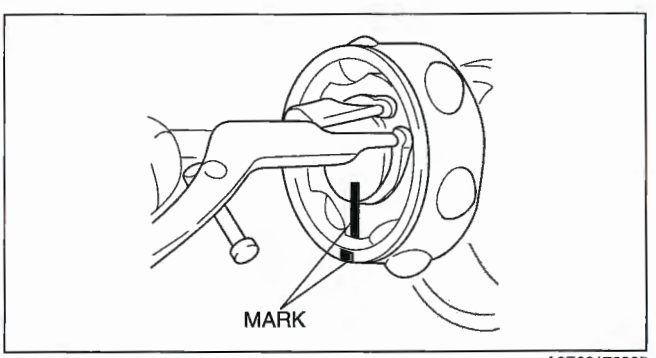

A6E63172005

Balls, Inner Ring, Cage Disassembly Note

1. Mark the inner ring and cage for proper reassembly.

Caution
- **Mark with paint; do not use a punch.**

2. Turn the cage **approx. 22.5°** and pull the cage and balls from the inner ring.

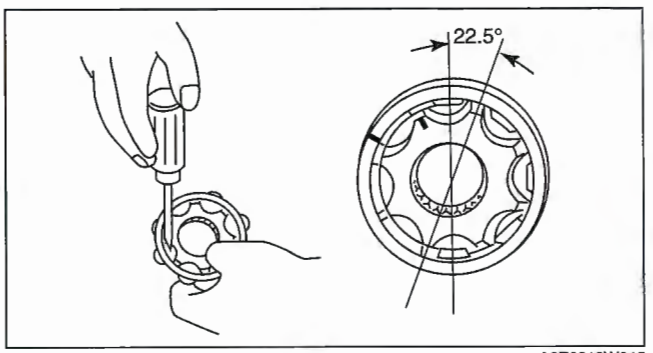

A6E6316W015

ABS Sensor Rotor Assembly Note

1. Install the ABS sensor rotor to the drive shaft using the **SSTs**.

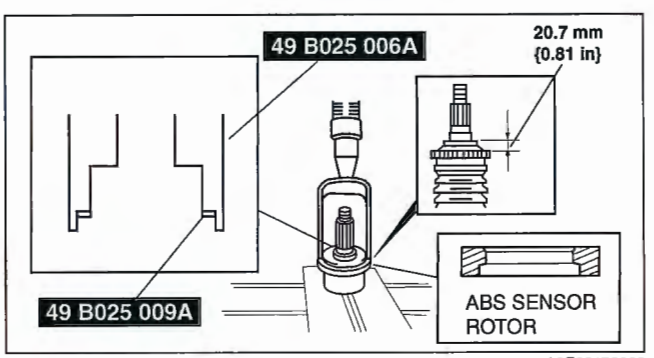

A6E63172008

Boot Assembly Note

Note
- The wheel side and differential side boots are different.

1. Fill the wheel side boot with the specified grease.

Caution
- **Do not touch grease with your hand. Apply it from the tube to prevent foreign matter from entering the boot.**

Grease amount
75—95 g {2.65—3.35 oz}

2. With the splines of the shaft wrapped in tape, install the boot.
3. Remove the tape.

Cage, Inner Ring, Balls, Snap Ring Assembly Note

1. Align the marks and install the balls and cage to the inner ring in the direction shown in the figure.

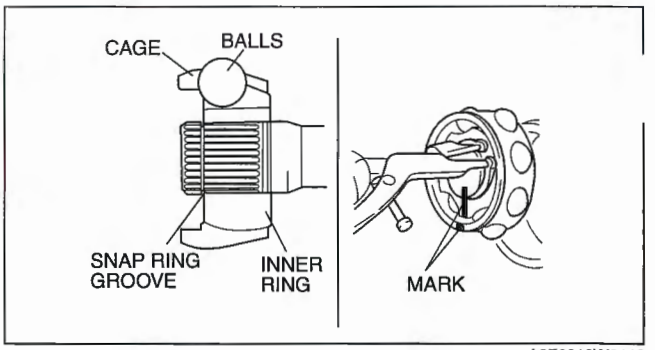

A6E6316W0112

Caution
- **Install the cage so that the major diameter is at the same side as the snap ring groove. If incorrectly installed, the drive shaft may become disengaged.**

2. Align the marks and install the inner ring to the shaft.
3. Install a new snap ring.

Outer Ring, Clip Assembly Note

1. Fill the outer ring and boot (differential side) with the specified grease.

Caution
- **Do not touch grease with your hand. Apply it from the tube to prevent foreign matter from entering the boot.**

Grease amount
70—90 g {2.5—3.1 oz}

2. Align the marks, and install the outer ring on to the shaft.
3. Install a new clip to the outer ring clip groove.
4. Install the boot.

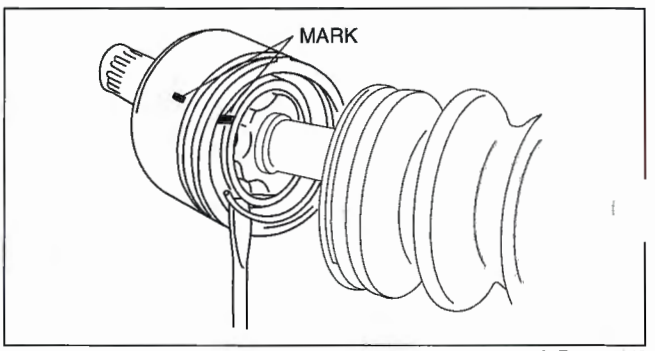

A6E6316W010

5. Release any trapped air from the boots by carefully lifting up the small end of each boot with a cloth wrapped screwdriver.

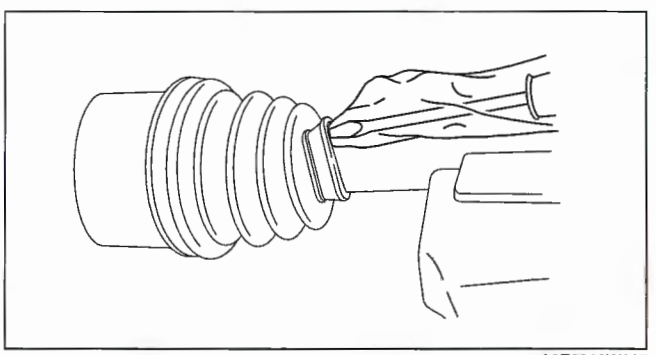
A6E6316W007

Caution
- **Do not let grease leak.**
- **Do not damage the boot.**

6. Set the drive shaft to the standard length.

Rear drive shaft standard length
LH: 804.2—814.2 mm {31.67—32.05 in}
RH: 860.7—870.7 mm {33.89—34.27 in}

7. Verify that the drive shaft length is within the standard.
   - If not, repeat from Step 5.

03–14 DIFFERENTIAL

REAR DIFFERENTIAL LOCATION INDEX 03–14–1
DIFFERENTIAL OIL INSPECTION 03–14–2
DIFFERENTIAL OIL REPLACEMENT 03–14–2
OIL SEAL (SIDE GEAR) REPLACEMENT 03–14–3
OIL SEAL (COMPANION FLANGE) REPLACEMENT 03–14–4
REAR DIFFERENTIAL REMOVAL/INSTALLATION 03–14–5
Coupling Component and Rear Differential Component Removal/installation Note 03–14–6
REAR DIFFERENTIAL DISASSEMBLY 03–14–6
Rear Cover Disassembly Note 03–14–7
Bearing Cap Disassembly Note 03–14–7
Rear Differential Component Disassembly Note 03–14–8
Locknut Disassembly Note 03–14–8
Drive Pinion Disassembly Note 03–14–8
Bearing Inner Race (Rear Bearing) Disassembly Note 03–14–8
Bearing Outer Race Disassembly Note 03–14–9
Ring Gear Disassembly Note 03–14–9
Side Bearing Inner Race Disassembly Note 03–14–9
REAR DIFFERENTIAL ASSEMBLY 03–14–10
Side Bearing Inner Race Assembly Note 03–14–11
Ring Gear Assembly Note 03–14–11
Bearing Outer Race Assembly Note 03–14–11
Spacer, Bearing Inner Race Assembly Note 03–14–12
Locknut Assembly Note 03–14–14
Adjusting Shim Assembly Note 03–14–14
Bearing Cap Assembly Note 03–14–16
Rear Cover Assembly Note 03–14–17
Oil Seal Assembly Note 03–14–17

REAR DIFFERENTIAL LOCATION INDEX

E6U031427100W01

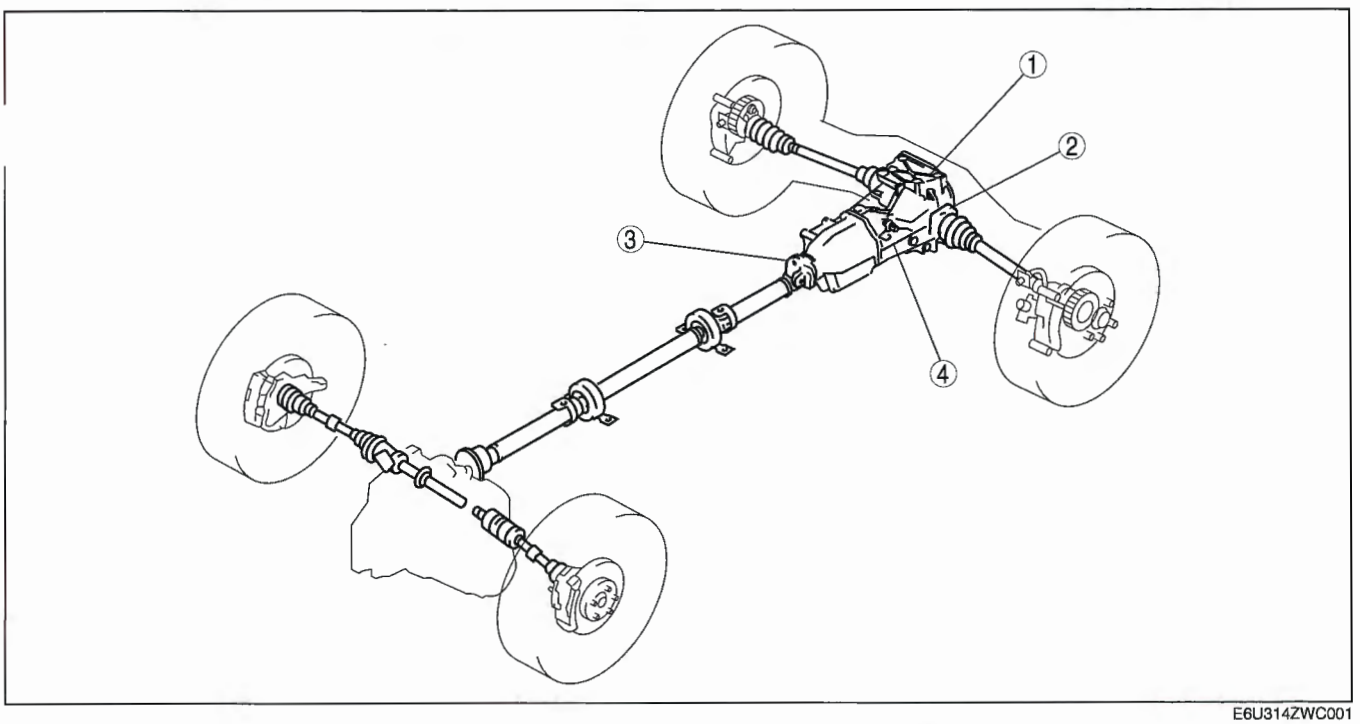

E6U314ZWC001

1	Differential oil (See 03–14–2 DIFFERENTIAL OIL INSPECTION) (See 03–14–2 DIFFERENTIAL OIL REPLACEMENT)
2	Oil seal (side gear) (See 03–14–3 OIL SEAL (SIDE GEAR) REPLACEMENT)
3	Oil seal (companion flange) (See 03–14–4 OIL SEAL (COMPANION FLANGE) REPLACEMENT)
4	Rear differential (See 03–14–5 REAR DIFFERENTIAL REMOVAL/INSTALLATION) (See 03–14–6 REAR DIFFERENTIAL DISASSEMBLY) (See 03–14–10 REAR DIFFERENTIAL ASSEMBLY)

DIFFERENTIAL OIL INSPECTION

E6U031427100W02

1. Place the vehicle on level ground.
2. Remove the filler plug and washer.
3. Verify that the oil is at the brim of the filler plug hole.
4. If it is low, add the specified oil.
5. Install a new washer and the filler plug, and tighten.

Tightening torque
39.2—53.9 N·m {4.0—5.4 kgf·m, 29.0—39.7 ft·lbf}

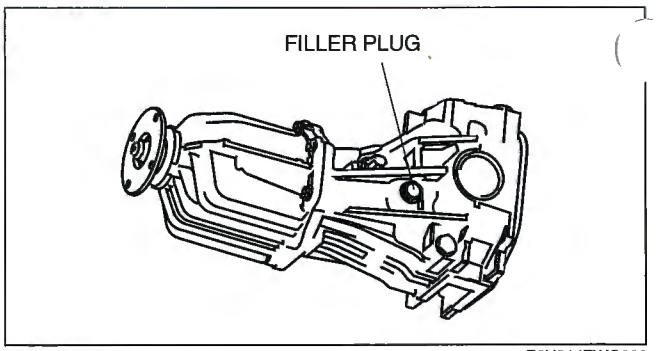

E6U314ZWC009

DIFFERENTIAL OIL REPLACEMENT

E6U031427100W03

1. Place the vehicle on level ground.
2. Remove the filler plug.
3. Remove the drain plug and drain the differential oil into a container.
4. Install a new washer and the drain plug, and tighten.

Tightening torque
39.2—53.9 N·m {4.0—5.4 kgf·m, 29.0—39.7 ft·lbf}

5. Add the specified differential oil from the filler plug until the level reaches the brim of the plug hole.

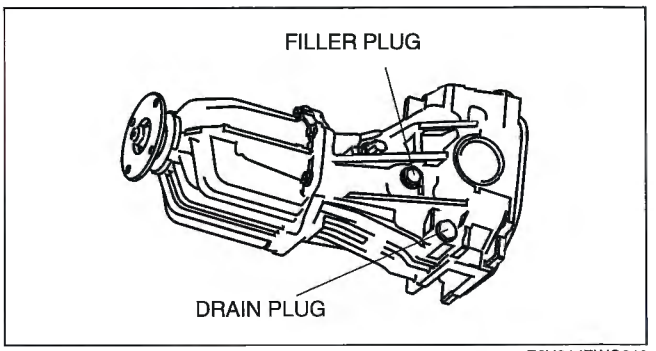

E6U314ZWC010

Rear differential oil type
Grade: API service GL-5
Viscosity: SAE 90, SAE 80W-90, SAE 75W-90 (Not available from Mazda)

Rear differential oil capacity (approximate quantity)
1.00 L {1.06 US qt, 0.88 Imp qt}

6. After filling with differential oil, perform oil level inspection.
7. Install a new washer and the drain plug, and tighten.

Tightening torque
39.2—53.9 N·m {4.0—5.4 kgf·m, 29.0—39.7 ft·lbf}

OIL SEAL (SIDE GEAR) REPLACEMENT

E6U031427100W04

1. Remove the drain plug and the drain differential oil into a container.
2. Install a new washer and the drain plug, and tighten.
3. Remove the rear drive shaft. (See 03–13–30 REAR DRIVE SHAFT REMOVAL/INSTALLATION.)
4. Remove the clip from the drive shaft.

Caution
- **Wrap the end of a screwdriver with cloth to prevent scratches to the inside of the differential casing.**

5. Remove the oil seal from the differential casing using a screwdriver.
6. Apply differential oil to the new oil seal lip.

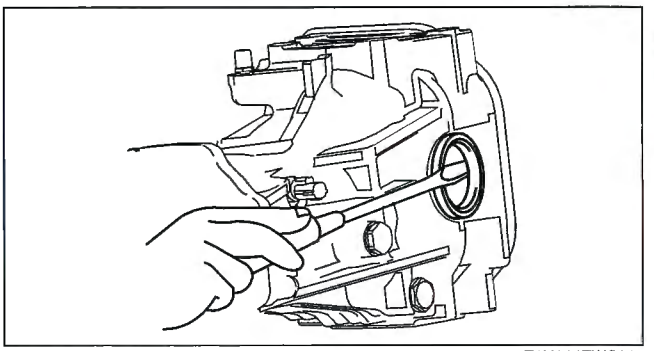

E6U314ZWC012

7. Install the new oil seal to the differential carrier using the **SSTs**.
8. After installing the new clip onto the drive shaft, insert the drive shaft into the differential. (See 03–13–30 REAR DRIVE SHAFT REMOVAL/ INSTALLATION.)
9. Verify that the drive shaft cannot be pulled out.
10. Add the specified differential oil.
    After adding the oil, perform an oil level inspection. (See 03–14–2 DIFFERENTIAL OIL INSPECTION.)
12. Install a new washer and the oil filler plug, and tighten.

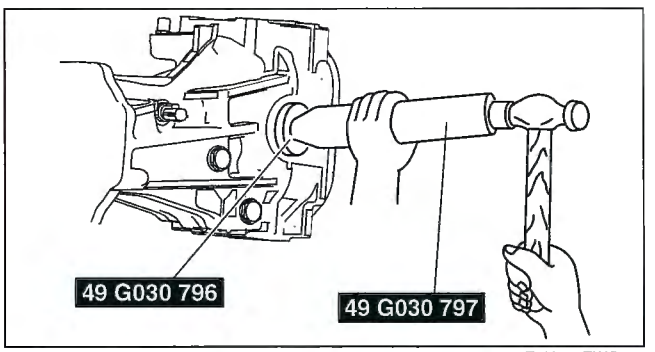

E6U314ZWC013

Tightening torque
39.2—53.9 N·m {4.0—5.4 kgf·m, 29.0—39.7 ft·lbf}

OIL SEAL (COMPANION FLANGE) REPLACEMENT

E6U031427100W05

1. Drain the differential oil into a container.
2. Remove the propeller shaft. (See 03–15–4 PROPELLER SHAFT REMOVAL/ INSTALLATION.)
3. Remove the locknut using the **SST**.
4. Support the differential using a jack.

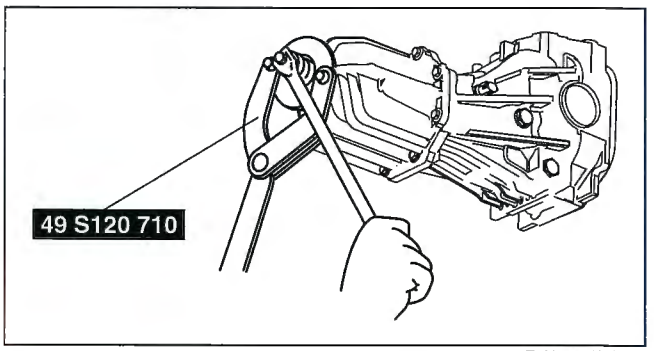

E6U314ZWC014

5. After removing the front side of the differential mount, gradually lower the jack and tilt the front side of the differential downward.

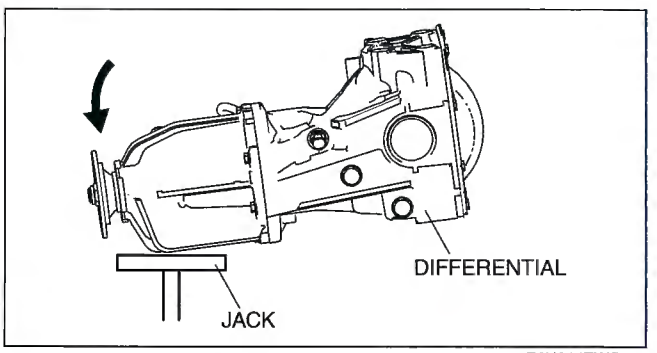

E6U314ZWC011

6. Pull the companion flange off using the **SST**.
7. Remove the oil seal from the differential carrier using a screwdriver or similar tool.
8. Apply differential oil to the new oil seal lip.

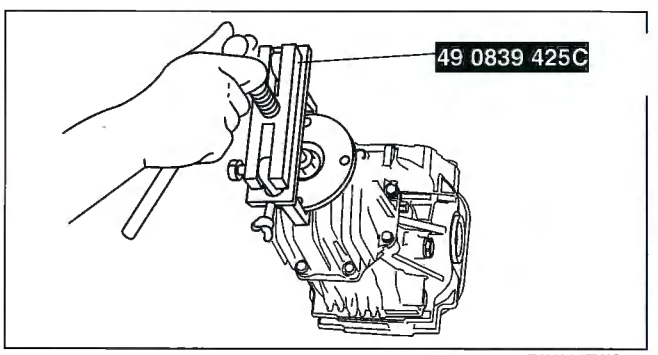

E6U314ZWC015

9. Install the new oil seal to the differential carrier using the **SST**.
10. Install the companion flange to the drive pinion.
11. Jack up the differential and install the front side of the differential mount.

    Tightening torque
    86.5—116.6 N·m {8.79—11.88 kgf·m, 63.58—85.98 ft·lbf}

12. Install the washer and a new locknut.

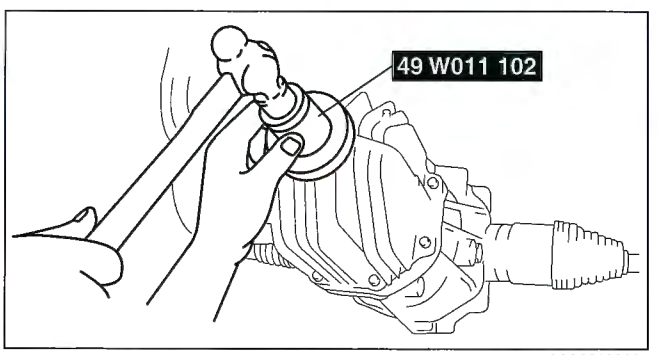

A6A63192006

13. Tighten the locknut to the specified torque using the SST.

    Tightening torque
    167—226 N·m {17.1—23.0 kgf·m, 124—166 ft·lbf}

14. Install the propeller shaft. (See 03–15–4 PROPELLER SHAFT REMOVAL/INSTALLATION.)
15. Add the specified differential oil from the filler plug. (See 03–14–2 DIFFERENTIAL OIL REPLACEMENT.)

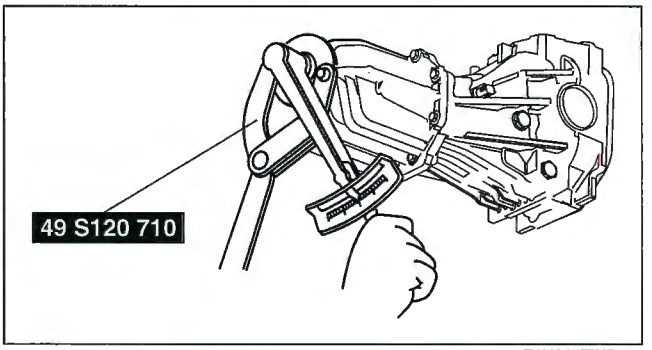

E6U314ZWC016

REAR DIFFERENTIAL REMOVAL/INSTALLATION

E6U031427100W06

1. Drain the rear differential oil into a container.
2. Remove the after silencer, presilencer, and catalytic converter. (See 01–15B–2 EXHAUST SYSTEM REMOVAL/INSTALLATION [L3 WITH TC].)
3. Remove the propeller shaft. (See 03–15–4 PROPELLER SHAFT REMOVAL/INSTALLATION.)
4. Remove the rear drive shaft. (See 03–13–30 REAR DRIVE SHAFT REMOVAL/INSTALLATION.)
5. Remove in the order indicated in the table.
6. Install in the reverse order of removal.
7. Add the specified rear differential oil.

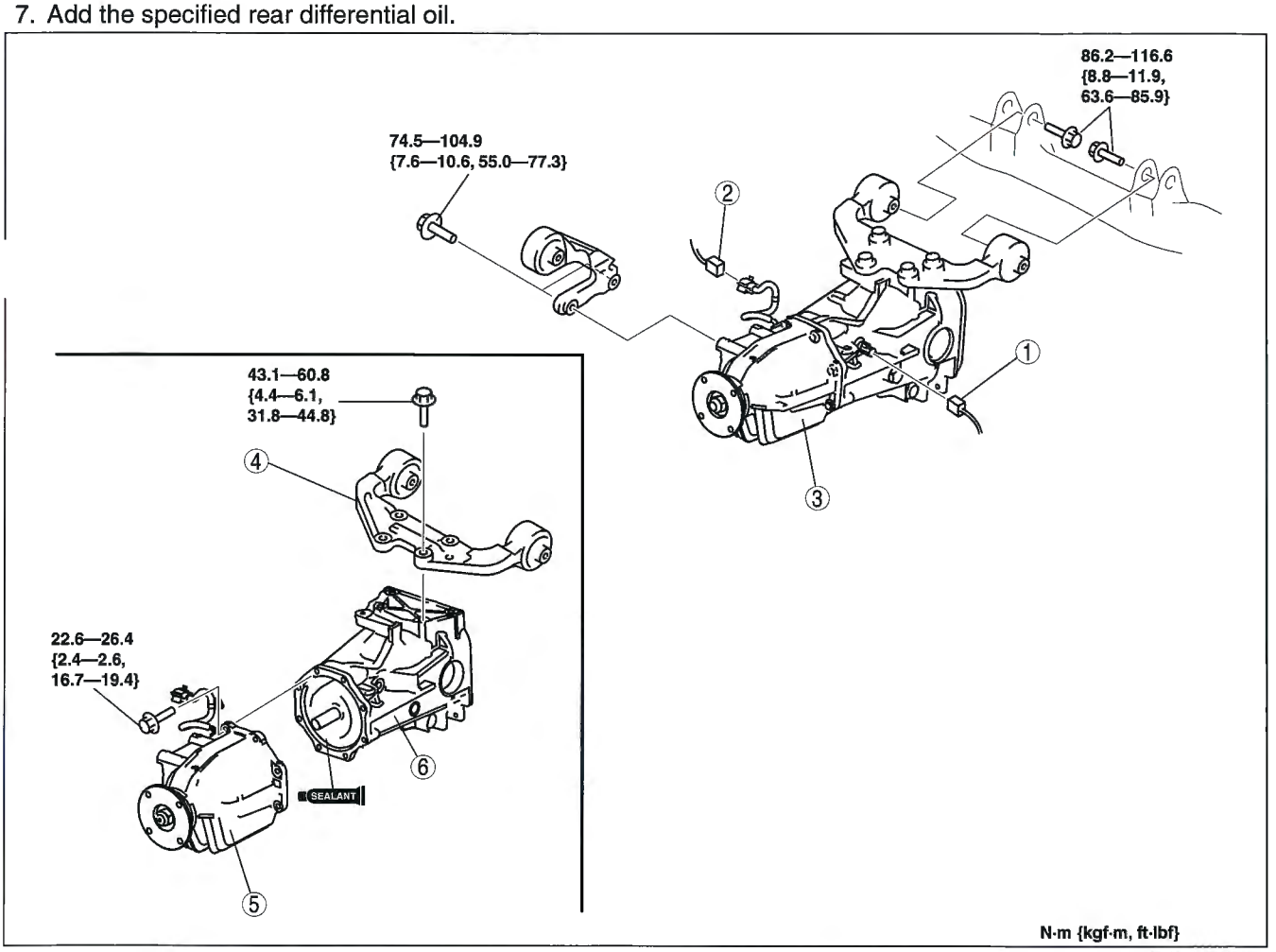

E6U314ZWC020

1	Differential oil temperature sensor connector
2	4WD solenoid connector
3	Coupling component and rear differential component (See 03–14–6 Coupling Component and Rear Differential Component Removal/installation Note)
4	Rear differential bracket
5	Coupling component (See 03–19–5 COUPLING COMPONENT REMOVAL/INSTALLATION)
6	Rear differential

Coupling Component and Rear Differential Component Removal/installation Note

Warning

- **Make sure that the coupling component and rear differential component are securely supported by the jack. If the coupling component and rear differential component fall, it could cause death, serious injury, or vehicle damage.**

1. Make sure that the coupling component and rear differential component are securely supported by the jack, and remove/install the component by operating the jack gradually.

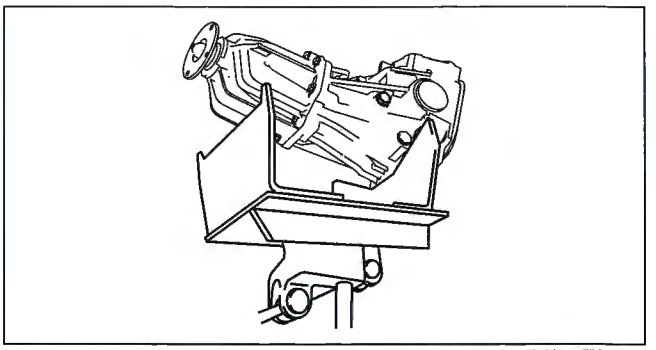

E6U314ZWC021

REAR DIFFERENTIAL DISASSEMBLY

E6U031427100W07

Warning

- **The engine stand is equipped with a self-lock mechanism, however, if the rear differential is in a tilted condition, the self-lock mechanism could become inoperative. If the rear differential unexpectedly rotates it could cause injury, therefore do not maintain the rear differential in a tilted condition. When turning the rear differential, grasp the rotation handle firmly.**

1. Disassemble in the order indicated in the table.

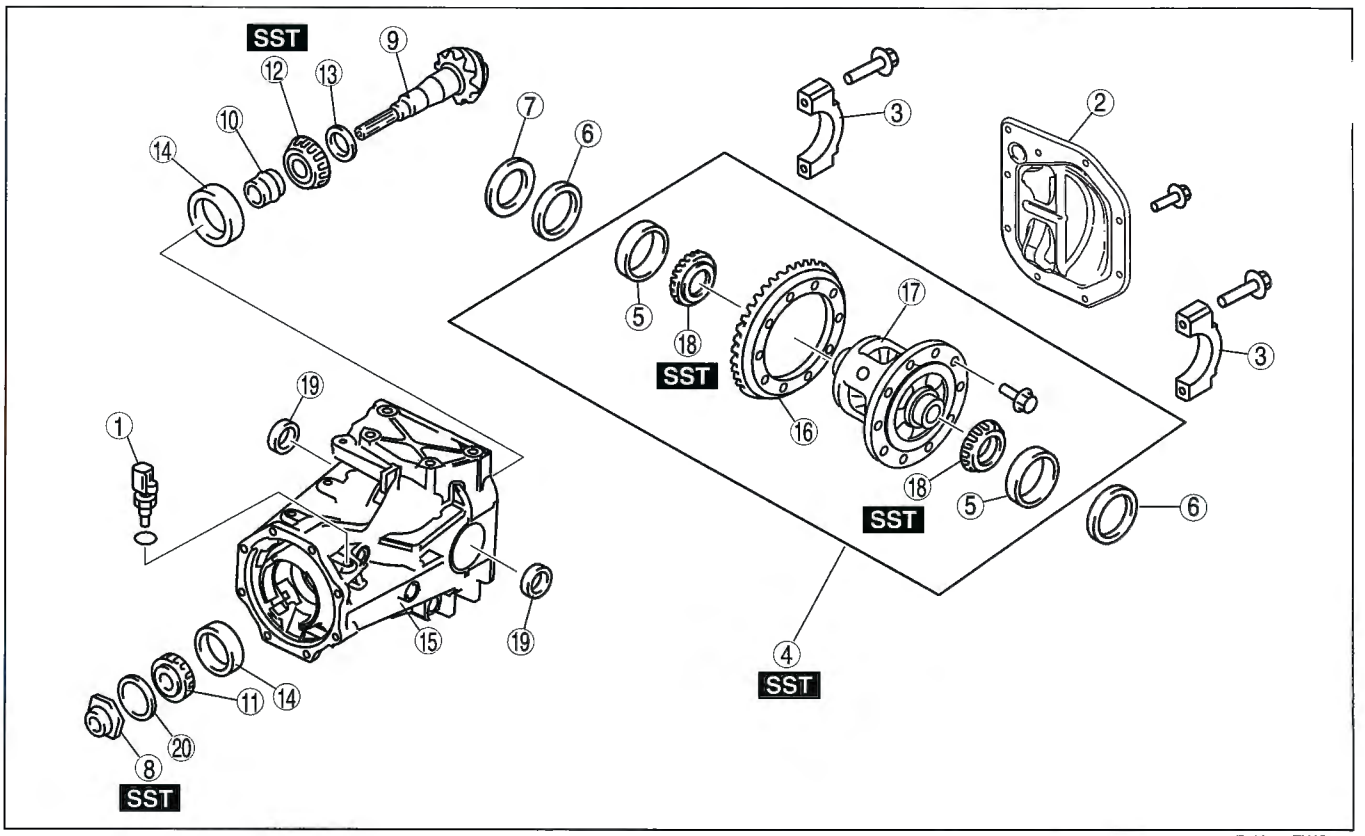

E6U314ZWC002

1	Differential oil temperature sensor
2	Rear cover (See 03–14–7 Rear Cover Disassembly Note)
3	Bearing cap (See 03–14–7 Bearing Cap Disassembly Note)

4	Rear differential component (See 03–14–8 Rear Differential Component Disassembly Note)
5	Side bearing outer race
6	Adjusting shim

7	Spacer
8	Locknut (See 03–14–8 Locknut Disassembly Note)
9	Drive pinion (See 03–14–8 Drive Pinion Disassembly Note)
10	Collapsible spacer
11	Bearing inner race (front bearing)
12	Bearing inner race (rear bearing) (See 03–14–8 Bearing Inner Race (Rear Bearing) Disassembly Note)
13	Spacer
14	Bearing outer race (See 03–14–9 Bearing Outer Race Disassembly Note)
15	Differential carrier
16	Ring gear (See 03–14–9 Ring Gear Disassembly Note)
17	Differential gear case component
18	Side bearing inner race (See 03–14–9 Side Bearing Inner Race Disassembly Note)
19	Oil seal

Rear Cover Disassembly Note

1. Install the **SSTs** to the engine stand.

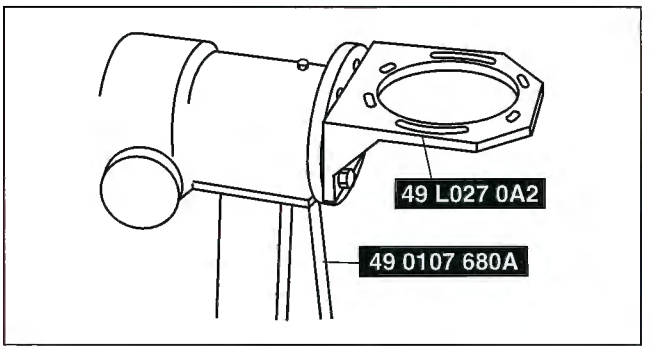

A6A63192009

2. Install the rear differential to the **SSTs**.
3. Remove the rear cover using an oil seal cutter.

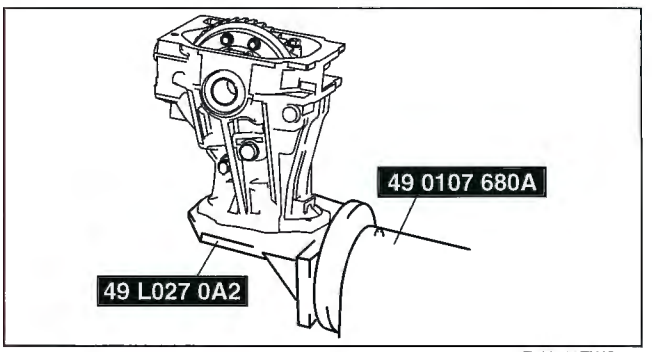

E6U314ZWC023

Bearing Cap Disassembly Note

1. Place alignment marks on the bearing cap and carrier.

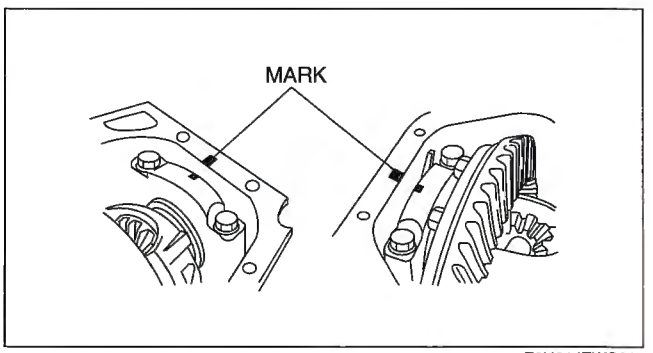

E6U314ZWC017

Rear Differential Component Disassembly Note

1. Remove the rear differential component using the **SSTs.**
2. Mark or otherwise distinguish between the removed left and right adjusting shims, spacers and side bearing outer races so that they are not mixed up at the time of reassembly.

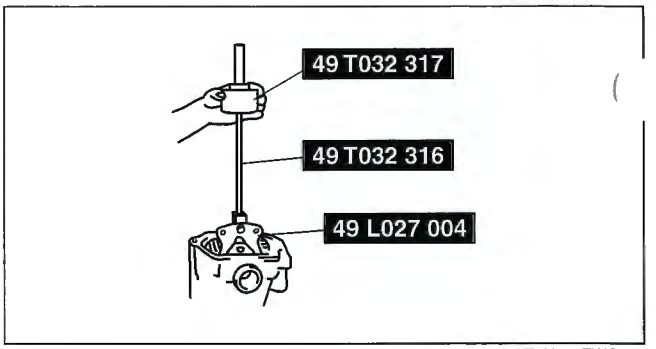

E6U314ZWC018

Locknut Disassembly Note

1. Remove the locknut using the **SSTs.**

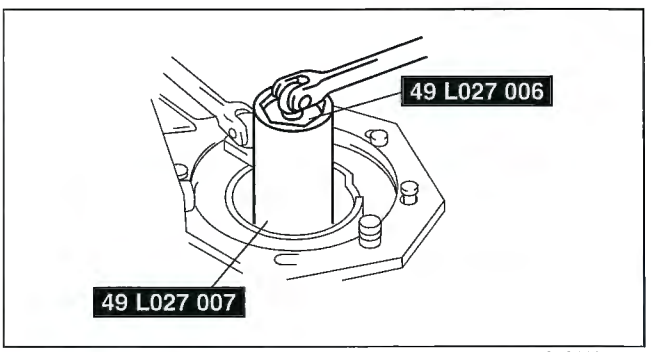

A6A63192013

Drive Pinion Disassembly Note

1. Remove the drive pinion by lightly tapping with a copper hammer.

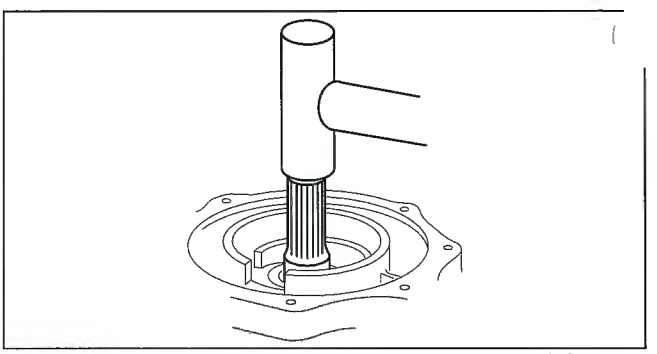
A6A63192014

Bearing Inner Race (Rear Bearing) Disassembly Note

1. Remove the bearing inner races (rear bearing) using the **SST** and a press.

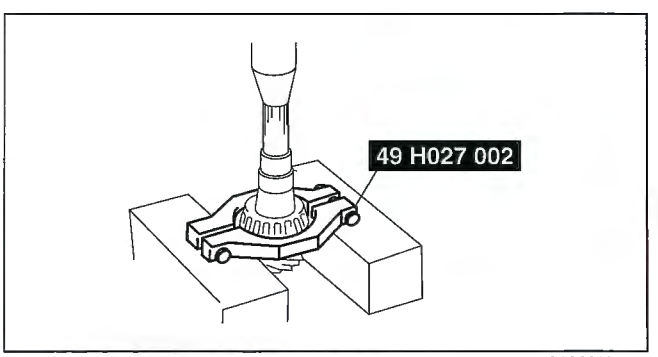

A6A63192015

Bearing Outer Race Disassembly Note

1. Remove the bearing outer races using the 2 grooves in the carrier and alternately tapping the sides of the races with a brass bar.

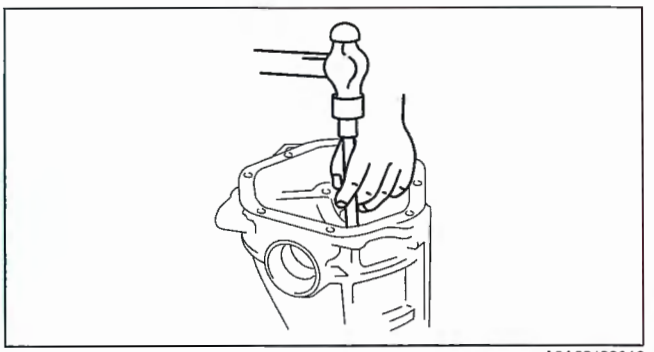

A6A63192016

Ring Gear Disassembly Note

1. Secure the gear case in a vice and remove the bolts.
2. Lightly tap around the ring gear using a plastic hammer to remove the ring gear from the gear case.

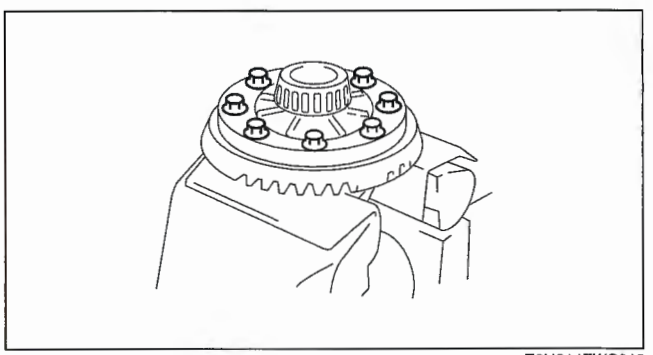

E6U314ZWC019

Side Bearing Inner Race Disassembly Note

Note

- Mark or otherwise distinguish between the left and right side bearings so that they are not mixed up at the time of reassembly.

1. Remove the side bearing inner races from the gear case using the **SST** and a press.

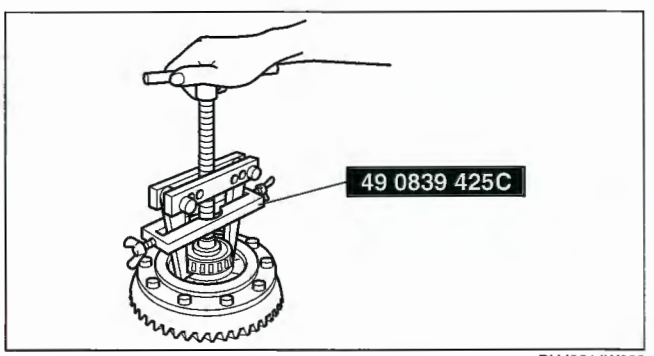

BHJ0314W020

REAR DIFFERENTIAL ASSEMBLY

E6U031427100W08

Warning

- **The engine stand is equipped with a self-lock mechanism, however, if the rear differential is in a tilted condition, the self-lock mechanism could become inoperative. If the rear differential unexpectedly rotates it could cause injury, therefore do not maintain the rear differential in a tilted condition. When turning the rear differential, grasp the rotation handle firmly.**

Note

- Clean away the old sealant before applying the new sealant.
- Install the rear cover within **10 minutes** after applying sealant.
- Allow the sealant to set at least **30 minutes** after installation before filling the differential with the specified oil.

1. Assemble in the order indicated in the table.

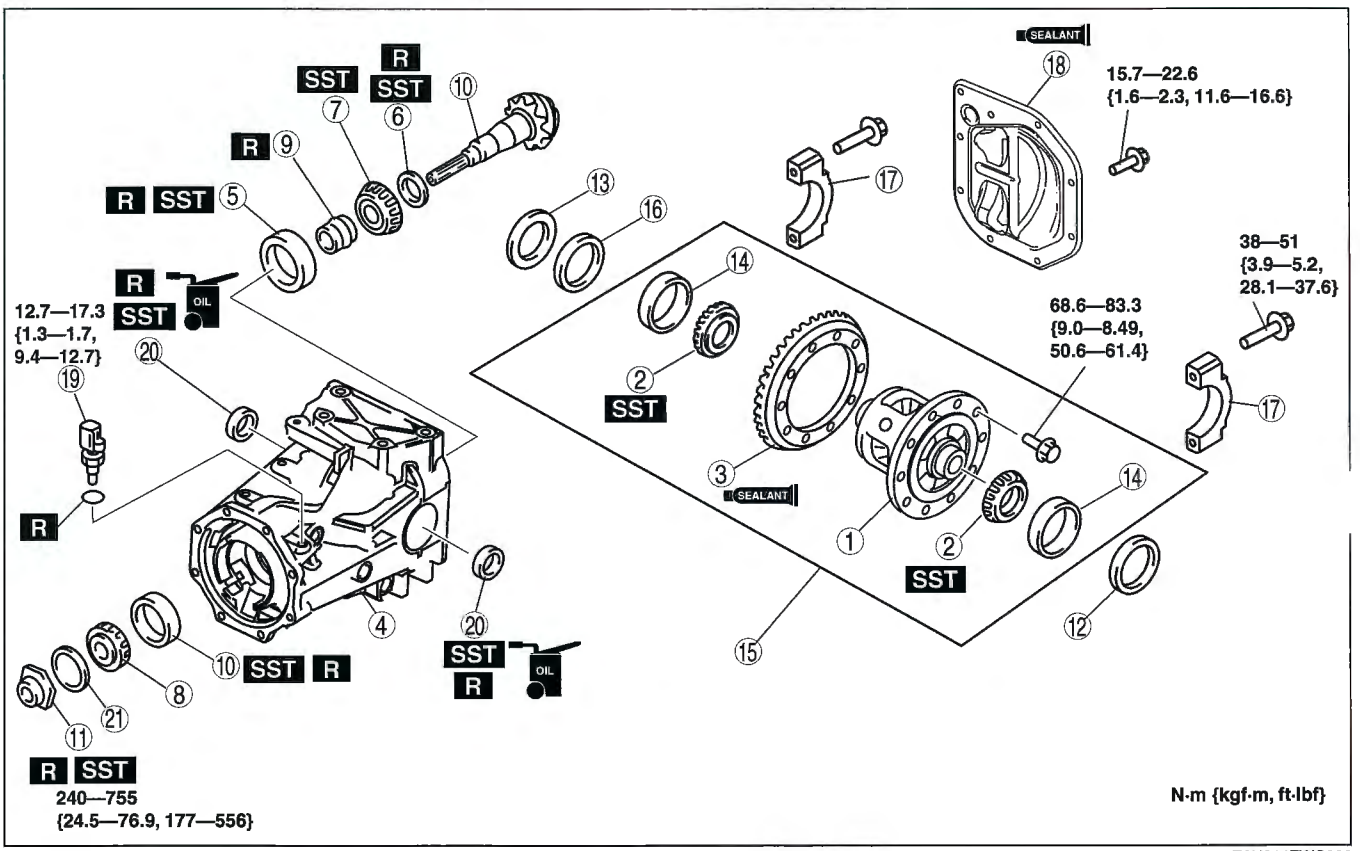

E6U314ZWC003

1	Differential gear case component
2	Side bearing inner race (See 03–14–11 Side Bearing Inner Race Assembly Note)
3	Ring gear (See 03–14–11 Ring Gear Assembly Note)
4	Differential carrier
5	Bearing outer race (See 03–14–11 Bearing Outer Race Assembly Note)
6	Spacer (See 03–14–12 Spacer, Bearing Inner Race Assembly Note)
7	Bearing inner race (rear bearing) (See 03–14–12 Spacer, Bearing Inner Race Assembly Note)
8	Bearing inner race (front bearing) (See 03–14–12 Spacer, Bearing Inner Race Assembly Note)

9	Collapsible spacer
10	Drive pinion
11	Locknut (See 03–14–14 Locknut Assembly Note)
12	Adjusting shim (L) (See 03–14–14 Adjusting Shim Assembly Note)
13	Spacer
14	Side bearing outer race
15	Rear differential component
16	Adjusting shim (R)
17	Bearing cap (See 03–14–16 Bearing Cap Assembly Note)
18	Rear cover (See 03–14–17 Rear Cover Assembly Note)
19	Differential oil temperature sensor
20	Oil seal (See 03–14–17 Oil Seal Assembly Note)

Side Bearing Inner Race Assembly Note

Caution
- **Do not mix up the left and right side bearing inner races.**

. Press the side bearing inner races into the gear case using the **SSTs**.

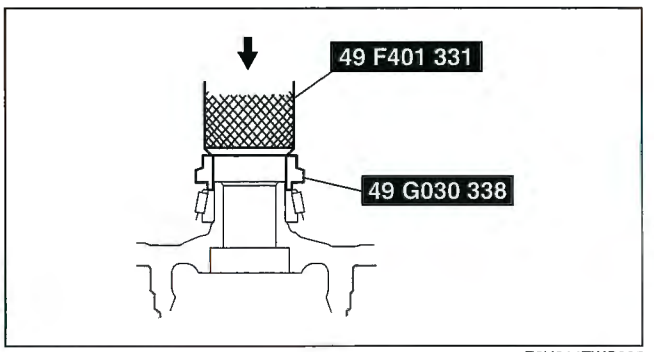

E6U314ZWC005

Ring Gear Assembly Note

Caution
- **The differential gear and ring gear could be damaged if the ring gear is installed with old thread-locking compound remaining on the bolt threads. Before installing the ring gear, completely remove the old thread-locking compound from the bolt threads.**

1. Apply a small amount of thread-locking compound to each of points A on the back of the ring gear, and bolt thread areas B (around the entire ring).

   Application amount
   Back of ring gear:
   Approx. 0.4 ml {0.4 cc, 0.02 cu in}
   Ring gear bolt thread points:
   Approx. 0.4 ml {0.4 cc, 0.02 cu in}
   (0.04 ml {0.04 cc, 0.002 cu in} to each point)

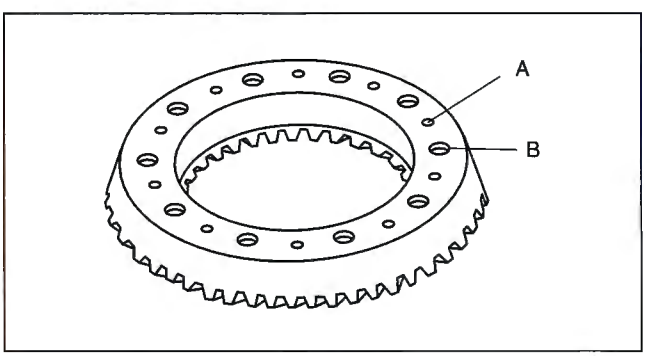

A6A63192022

2. Align the marks placed on the ring gear case at the time of disassembly and tighten the bolts in diagonal order.

   Tightening torque
   68.6—83.3 N·m {7.00—8.49 kgf·m, 50.6—61.4 ft·lbf}

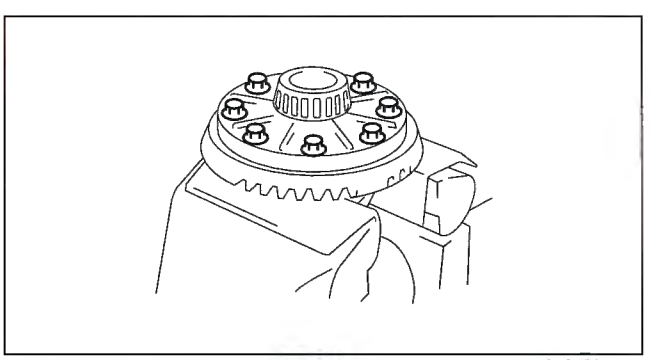
A6A63192023

Bearing Outer Race Assembly Note

1. Press in the bearing outer race using the **SSTs** and a press.

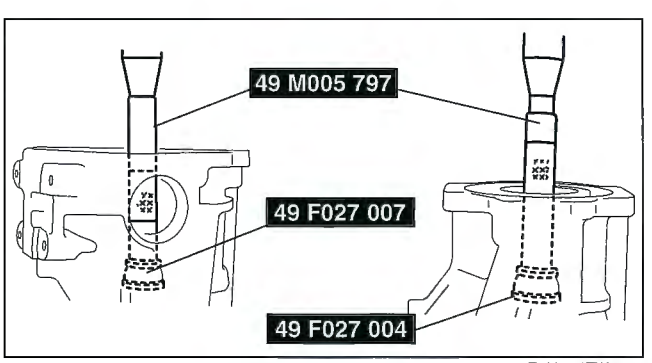

E6U314ZW7002

Spacer, Bearing Inner Race Assembly Note
Pinion height adjustment

Note
- Use the same spacer.
- Install the spacer with the chamfer on the **SST** side.

1. Assemble the spacer, the bearing inner race (rear bearing), and the **SST** O-ring to the **SST** (49 8531 565) as shown in the figure.
2. Insert the set assembled in Step 1 to the differential gear from the rear.
3. Assemble the bearing inner race (front bearing), **SST** (49 8531 567), companion flange, washer, and locknut from the front of the differential gear.
4. Tighten the locknut to the extent that the **SST** (49 8531 565) can be turned by hand.
5. Place the **SST** (49 0305 555) on top of the **SST** (49 8531 565).

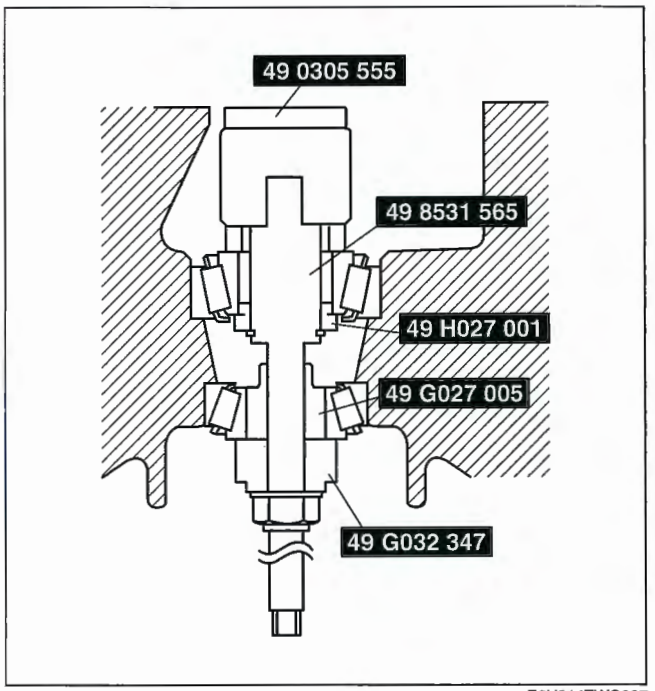

E6U314ZWC007

6. Place the **SST** on the surface plate and set the dial indicator to zero.

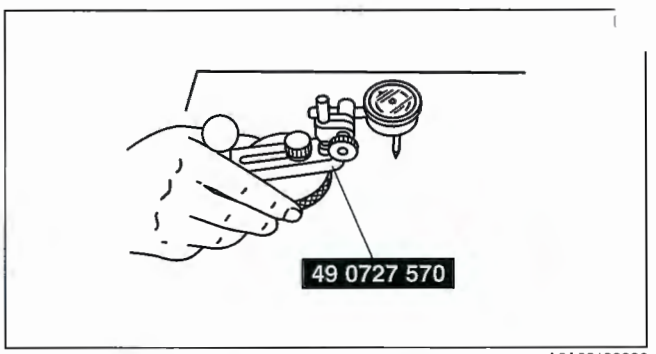

A6A63192026

7. Set the **SST** as shown in the figure.
8. Place the measuring probe of the dial indicator so that it contacts the place where the side bearing is installed in the carrier. Then measure the left and right side of the lower position.

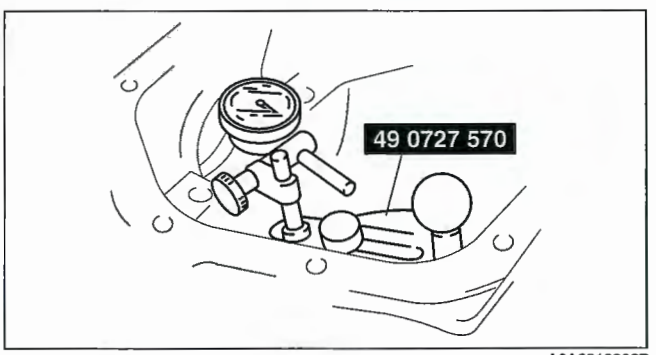

A6A63192027

9. Add the two (left and right) values obtained by the measurements taken in Step 8 and then divide the total by 2. From this result, subtract the result obtained by dividing the number inscribed on the end surface of the drive pinion by 100. (If there is no figure inscribed, use 0.) This is the pinion height adjustment value.

   Rear differential pinion height
   –0.032—0.032 mm {–0.0012—0.0012 in}

   Note
   - For example, the measured results obtained at Step 8 and 9 are 0.06 mm {0.003 in} and 0.04 mm {0.002 in}, and the figure inscribed on the end of the drive pinion is 2:
     ((0.06 mm {0.003 in}+ 0.04 mm {0.002 in}) / 2) – (2/100) = 0.03 mm {0.001 in} (pinion height adjustment value)
     Replace with a spacer 0.03 mm {0.001 in} thicker than the currently used one. Spacer thickness is set at 0.015 mm {0.0006 in} increments, therefore select the closest spacer thickness and assemble.
   - Install the spacer with the chamfer on the **SST** side.

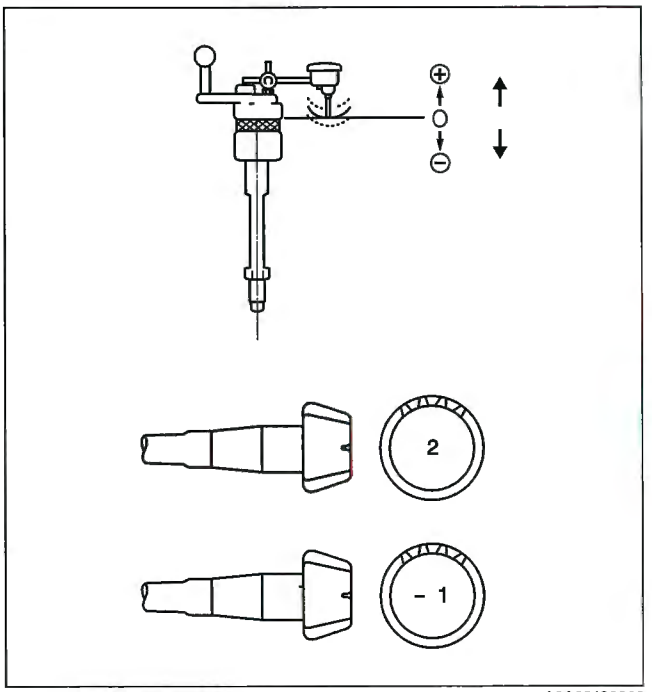

A6A63192028

Spacer thickness

Identification mark	Thickness (mm {in})	Identification mark	Thickness (mm {in})
08	3.08 {0.1213}	29	3.29 {0.1295}
09	3.095 {0.1219}	30	3.305 {0.1301}
11	3.11 {0.1224}	32	3.32 {0.1307}
12	3.125 {0.1230}	33	3.335 {0.1313}
14	3.14 {0.1236}	35	3.35 {0.1319}
15	3.155 {0.1242}	36	3.365 {0.1325}
17	3.17 {0.1248}	38	3.38 {0.1331}
18	3.185 {0.1254}	39	3.395 {0.1337}
20	3.20 {0.1260}	41	3.41 {0.1343}
21	3.215 {0.1266}	42	3.425 {0.1348}
23	3.23 {0.1272}	44	3.44 {0.1354}
24	3.245 {0.1278}	45	3.455 {0.1360}
26	3.26 {0.1283}	47	3.47 {0.1366}
27	3.275 {0.1289}	—	—

10. Assemble the spacer selected for the pinion height adjustment to the drive pinion.
11. Press the bearing inner race (rear bearing) into the drive pinion using the **SSTs** and a press.

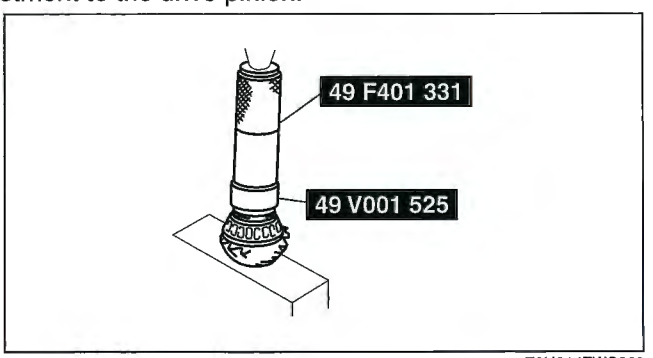

E6U314ZWC008

Locknut Assembly Note
Drive pinion preload adjustment

1. Apply differential oil to a new locknut.
2. Assemble a new collapsible spacer, bearing inner race (front bearing), spacer and locknut to the drive pinion and temporarily tighten the locknut.
3. Turn the serrated part of the drive pinion by hand to seat the bearing.
4. Tighten the locknut temporarily tightened in Step 1 from the lower limit of the specified tightening torque using the **SSTs**, and make this the specified preload.
   - If the specified preload cannot be obtained within the specified tightening torque, replace the collapsible spacer and inspect again.

   Tightening torque
   240—755 N·m {24.5—76.9 kgf·m, 177—556 ft·lbf}

   Rear differential drive pinion preload
   1.3—1.8 N·m {13.3—18.2 kgf·cm, 11.5—15.9 in·lbf}

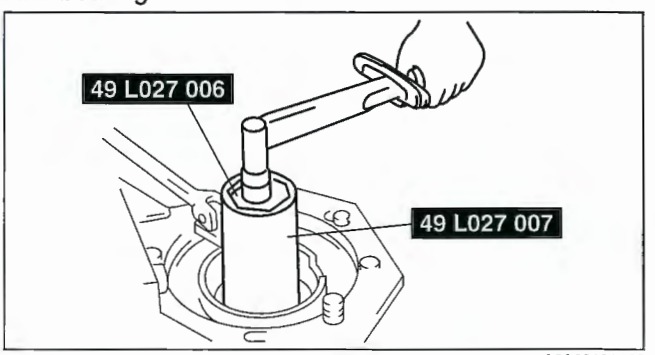

A6A63192030

5. Crimp the locknut using a chisel and hammer.

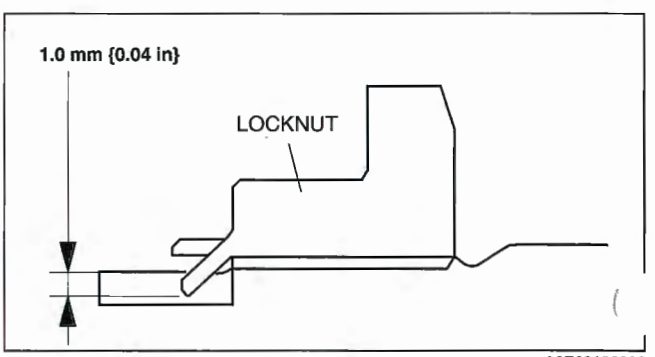

A6E63192032

Adjusting Shim Assembly Note

1. Assemble the differential carrier to the **SSTs**.
2. Assemble the spacer to the differential carrier.
3. Stack the side bearing outer race and gear case component on the surface plate as indicated in the figure, and measure the height using a caliper and a ruler. This is value A.

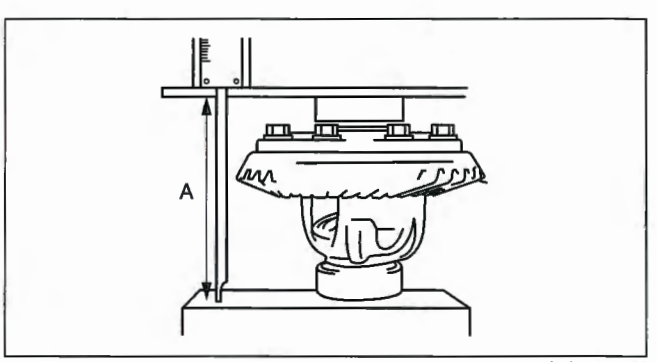

A6A63192033

4. Measure the width of the installed differential in the differential carrier with the spacer installed. This is value B.
5. The combined thickness of the left and right adjusting shims is obtained by the following formula.
   C_1 = B – A + 0.15 mm {0.006 in}
   C_2 = B – A + 0.44 mm {0.017 in}
6. If the combined thickness of the previously installed adjusting shims is between C1 and C2, use the shims as they are.

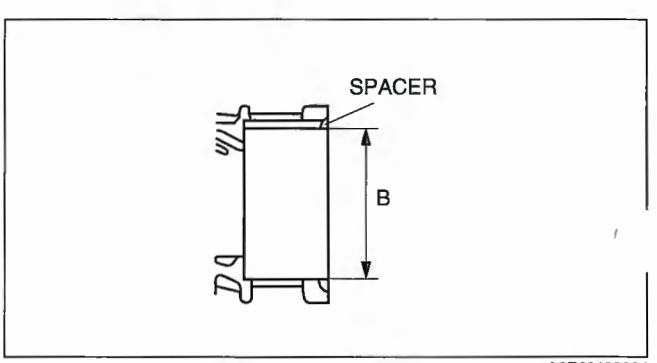

A6E63192034

7. If the combined thickness of the previously installed adjusting shims is not between C1 and C2, or if the adjusting shims have to be replaced, select two appropriate adjusting shims from the table below.

Adjusting shim thickness

Identification mark	Thickness (mm {in})	Identification mark	Thickness (mm {in})
350	3.50 {0.137}	410	4.10 {0.161}
355	3.55 {0.139}	415	4.15 {0.163}
360	3.60 {0.141}	420	4.20 {0.165}
365	3.65 {0.143}	425	4.25 {0.167}
370	3.70 {0.145}	430	4.30 {0.169}
375	3.75 {0.147}	435	4.35 {0.171}
380	3.80 {0.149}	440	4.40 {0.173}
385	3.85 {0.151}	445	4.45 {0.175}
390	3.90 {0.153}	450	4.50 {0.177}
395	3.95 {0.155}	455	4.55 {0.179}
400	4.00 {0.157}	460	4.60 {0.181}
405	4.05 {0.159}	—	—

Caution
- **If adjusting shims are to be reused, do not mix up the left and right shims.**
- **Do not mix up the left and right side bearing outer races and spacers.**

8. Assemble the selected adjusting shims to the differential carrier ring gear side, and the spacer to the opposite side.
9. Assemble the differential and bearing outer race to the differential carrier.
10. Tap the selected adjusting shim between the spacer and the bearing race with a plastic hammer as shown in the figure.
11. Align the bearing cap alignment marks to assemble the bearing cap, and temporarily tighten the bolts.
12. Place the dial indicator so that the measuring probe contacts the top surface of one of the ring gear teeth perpendicularly.
13. Secure the drive pinion and measure the backlash from when the ring gear moved.

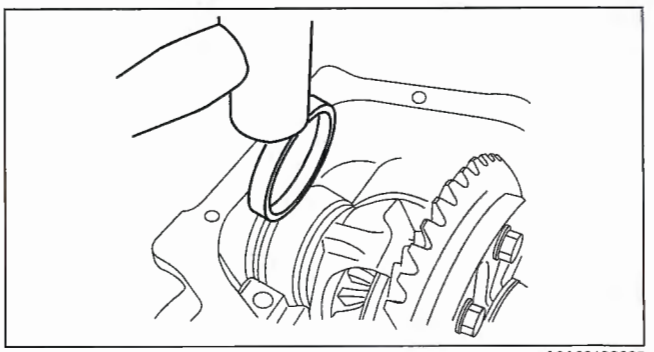

A6A63192035

Rear differential backlash of drive pinion and ring gear
Standard: 0.09—0.11 mm {0.003—0.004 in}
Minimum value: 0.05 mm {0.002 in}

Note
- Measure the backlash at 4 locations around the ring gear. Make sure one of the 4 locations is within specification, and the minimum value for the 4 locations is **0.5 mm {0.002 in}**or less.

14. If the backlash is not within the specification, adjust the gear case component by moving it in the axial direction.

Note
- When moving the gear case component in the axial direction, replace the adjusting shims. If the adjusting shim on the right side is replaced with one that is **0.05 mm {0.002 in}** thicker, replace the one on the left with one that is **0.05 mm {0.002 in}** thinner.

Bearing Cap Assembly Note

1. Align the bearing cap alignment marks to assemble the bearing cap.

   Tightening torque
   38—51 N·m {3.9—5.2 kgf·m, 28.1—37.0 ft·lbf}

2. Inspect the drive pinion and ring gear teeth contact points.

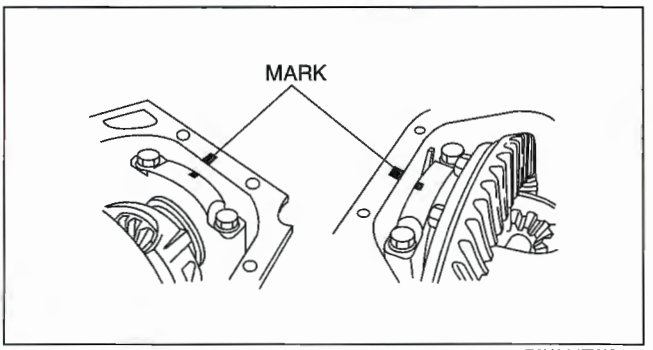

E6U314ZWC017

   (1) Coat both surfaces of the ring gear uniformly with a thin red lead coating.
   (2) While rotating the ring gear back and forth by hand, rotate the drive pinion several times and inspect the tooth contact.
   (3) Inspect the tooth contacts in four locations around the ring gear, and check that the tooth contacts showing the red lead coating are the same as the pattern indicated in the figure.
      - If the tooth contact is good, wipe off the red lead coating.
      - If it is not good, adjust the pinion height, then adjust the backlash.

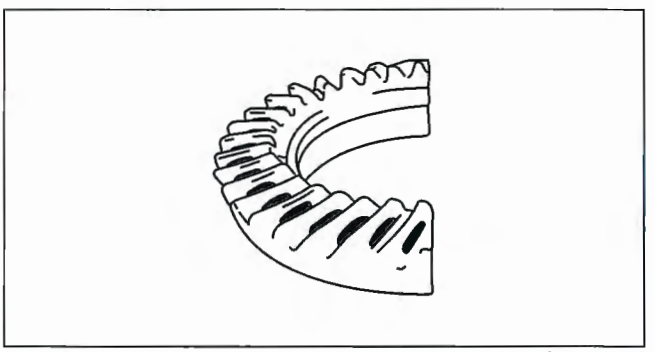
A6A6319203[illegible]

   (4) If toe and flank contact appears as shown in the figure, replace the spacer with a thinner one, and move the drive pinion outward.

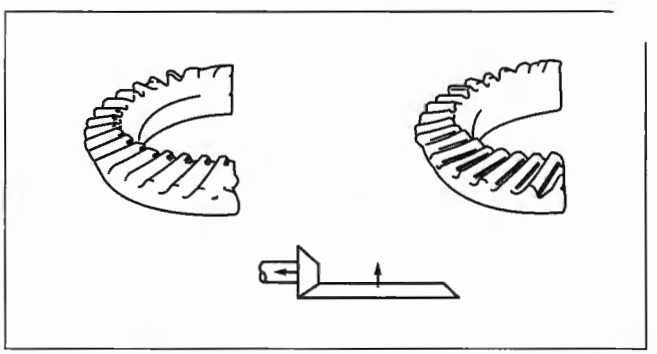
A6A63192039

   (5) If heel and face contact appears as indicated in the figure, replace the spacer with a thicker one and move the drive the pinion inward.

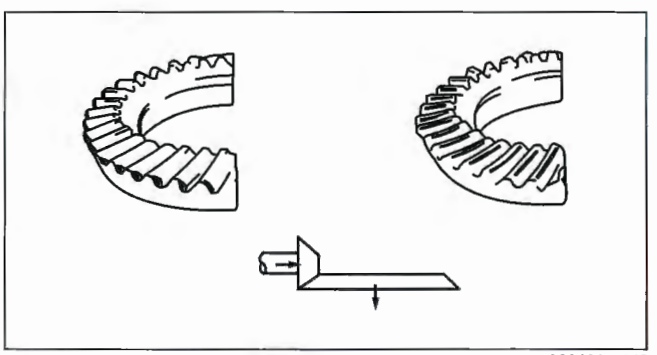
A6A63192040

Rear Cover Assembly Note

Caution
- **Clean away the old sealant before applying the new sealant.**
- **Install the rear differential within 10 minutes after applying sealant.**
- **Allow the sealant to set at least 30 minutes after installation before filling the differential with the specified oil.**

1. Clean the alignment surface of the carrier and rear cover, and apply a thin coat of sealant.
2. Install the rear cover.

Tightening torque
15.7—22.6 N·m {1.6—2.3 kgf·m, 11.6—16.6 ft·lbf}

Oil Seal Assembly Note
1. Apply differential oil to the new oil seal lip.
2. Assemble the oil seal using the **SSTs**.

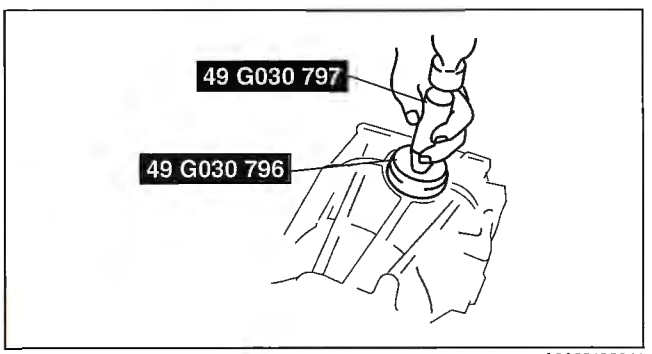

A6A63192041

03–15 PROPELLER SHAFT

PROPELLER SHAFT LOCATION INDEX **03–15–2**
PROPELLER SHAFT ON-VEHICLE INSPECTION **03–15–3**
Joint Area Excessive Play Inspection **03–15–3**
Propeller Shaft Runout Inspection **03–15–3**
PROPELLER SHAFT REMOVAL/INSTALLATION **03–15–4**
Nut Removal Note **03–15–5**
Propeller Shaft Installation Note **03–15–5**
Propeller Shaft Heat Shield Installation Note **03–15–6**
PROPELLER SHAFT DISASSEMBLY/ASSEMBLY **03–15–7**
Snap Ring Disassembly Note **03–15–8**
Bearing Cup Disassembly Note **03–15–8**
Locknut Disassembly Note **03–15–9**
Yoke Disassembly Note **03–15–9**
Bearing Support Disassembly Note **03–15–9**
Dust Cover (Bearing Support Side), Bearing Disassembly Note **03–15–10**
Bearing Assembly Note **03–15–10**
Dust Cover Assembly Note **03–15–10**
Bearing Support Assembly Note **03–15–11**
Locknut Assembly Note **03–15–11**
Bearing Cup, Snap Ring Assembly Note **03–15–11**
PROPELLER SHAFT INSPECTION **03–15–12**

PROPELLER SHAFT LOCATION INDEX

E6U031525002W01

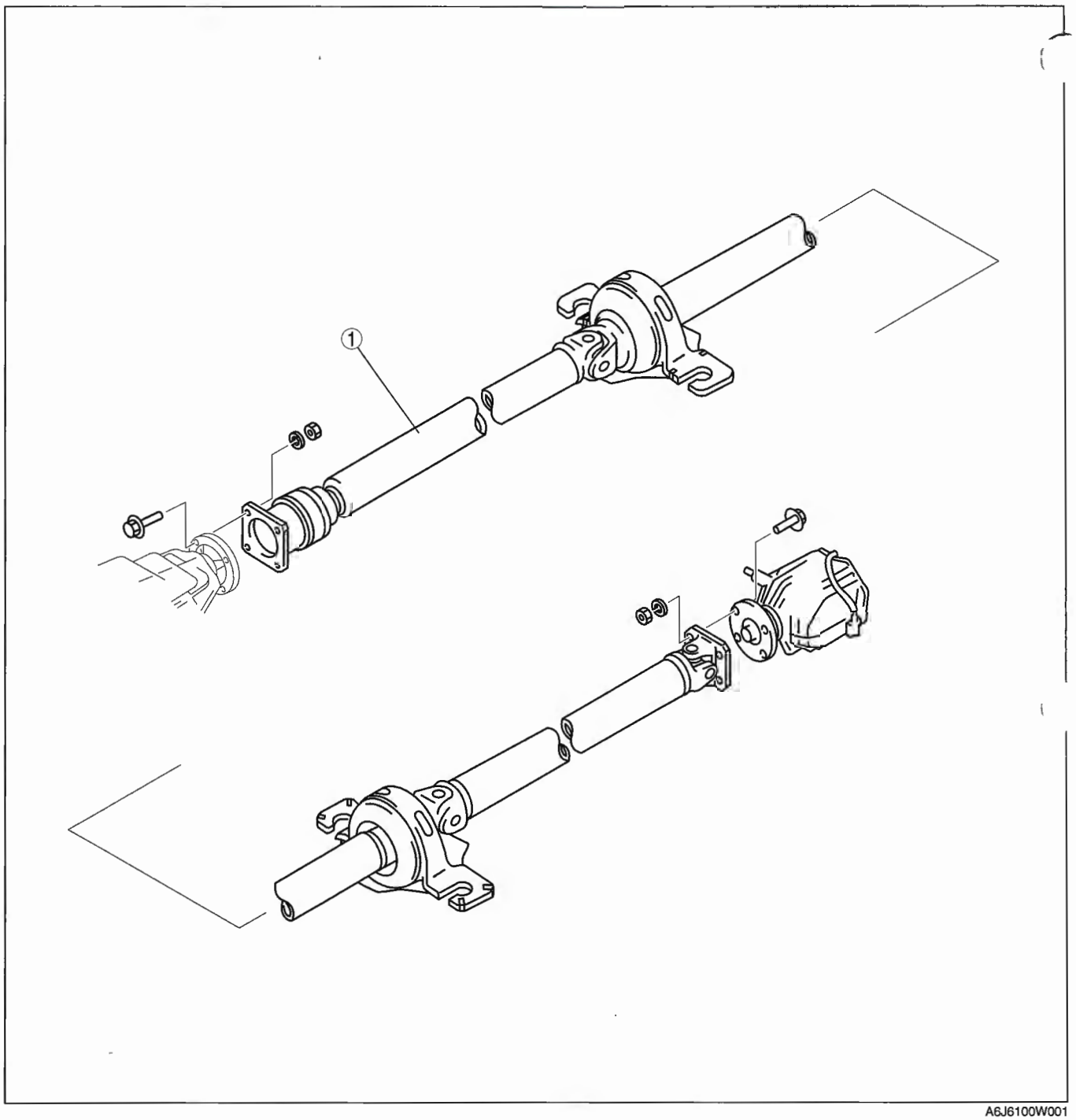

A6J6100W001

1	Propeller shaft (See 03–15–3 PROPELLER SHAFT ON-VEHICLE INSPECTION.) (See 03–15–4 PROPELLER SHAFT REMOVAL/INSTALLATION.) (See 03–15–7 PROPELLER SHAFT DISASSEMBLY/ASSEMBLY.) (See 03–15–12 PROPELLER SHAFT INSPECTION.)

PROPELLER SHAFT ON-VEHICLE INSPECTION

E6U031525002W02

Joint Area Excessive Play Inspection

1. Shake the universal joint by hand and verify that there is no excessive play.
2. If there is any excessive play, replace as follows:
   - Constant velocity joint: Replace the propeller shaft
   - Yoke: Replace the universal joint

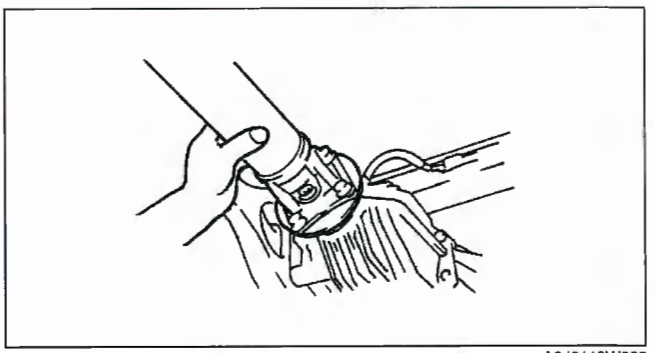

A6J6110W002

Propeller Shaft Runout Inspection

Caution

- **Do not rotate the propeller shaft using engine force when inspecting.**

1. Shift to neutral position and release the parking brake.
2. Rotate the rear wheel by hand and inspect the propeller shaft runout at the nine locations shown in the figure.
   - If it exceeds the standard specification, replace the propeller shaft.

Standard propeller shaft runout (on-vehicle)
0.4 mm {0.016 in}

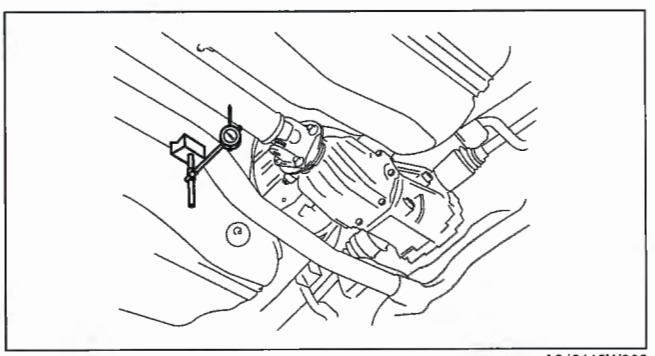

A6J6110W003

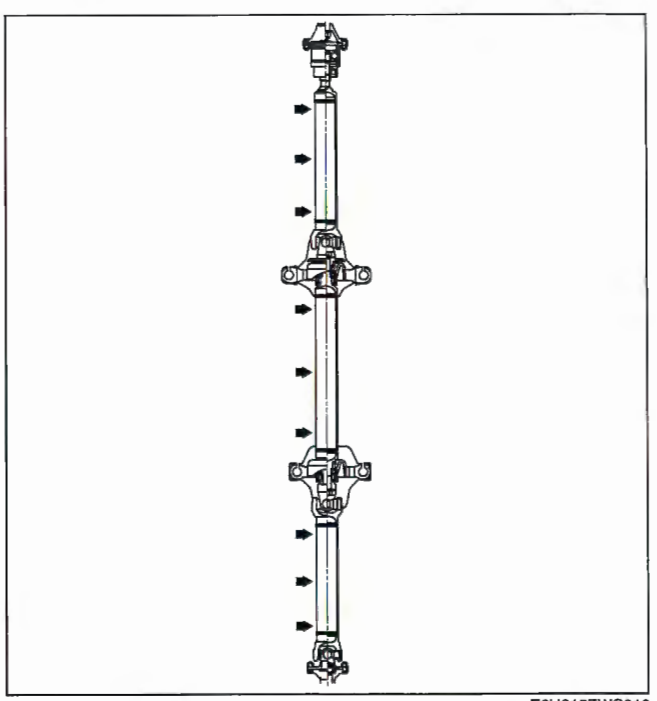

E6U315ZWC010

PROPELLER SHAFT REMOVAL/INSTALLATION

E6U031525002W03

1. Remove the negative battery cable.
2. Remove the middle pipe, TWC and front pipe. (See 01–15B–2 EXHAUST SYSTEM REMOVAL/INSTALLATION [L3 WITH TC].)
3. Remove in the order indicated in the figure.
4. Install in the reverse order of removal.

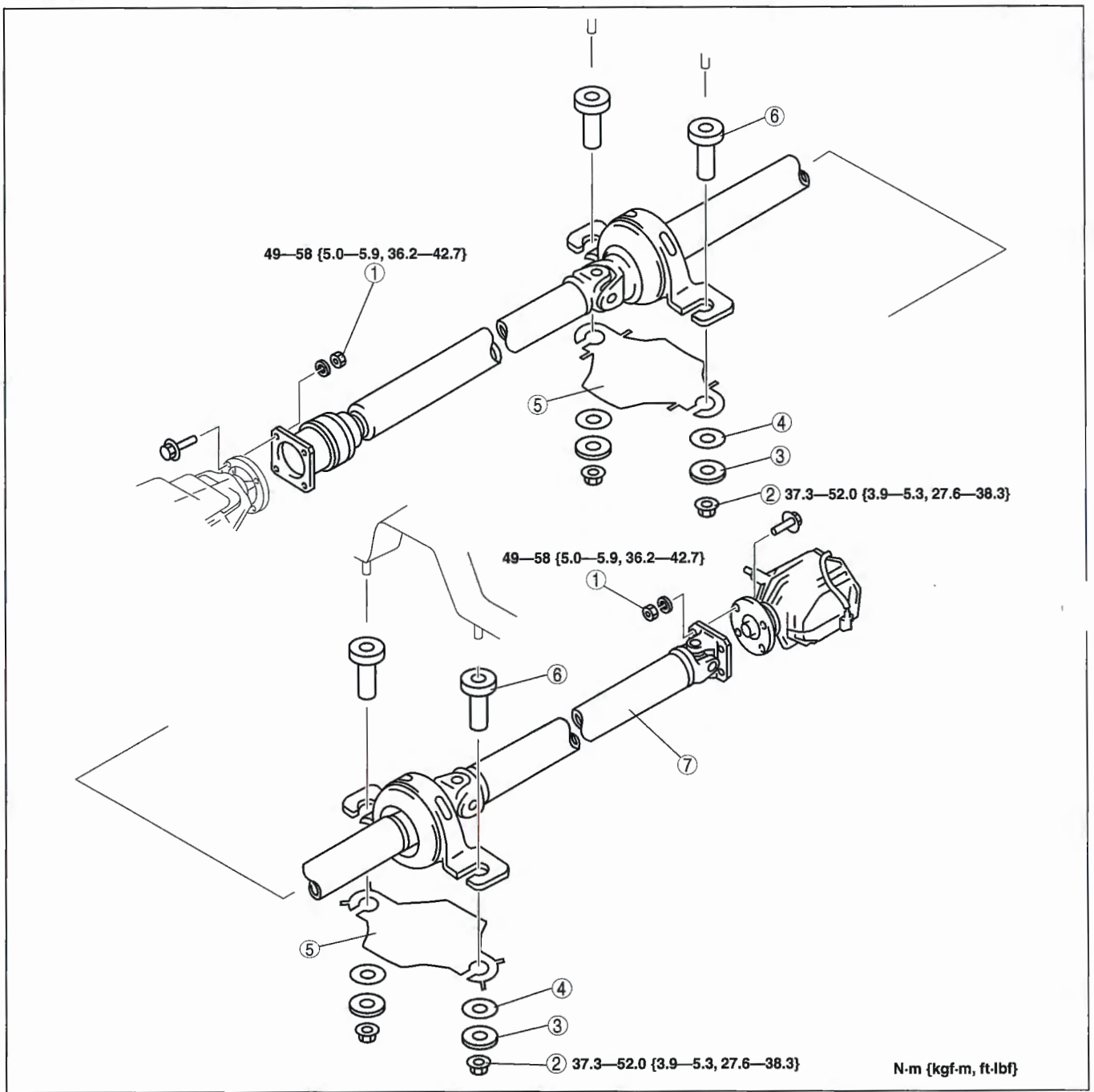

E6U315ZWC001

1	Nut (See 03–15–5 Nut Removal Note.)
2	Nut
3	Bush, spacer
4	Washer

5	Propeller shaft heat shield (See 03–15–6 Propeller Shaft Heat Shield Installation Note.)
6	Bush, spacer
7	Propeller shaft (See 03–15–5 Propeller Shaft Installation Note.)

Nut Removal Note

Caution
- **Do not mark with a punch to prevent imbalance.**

1. Before removing the nut, place alignment marks on the companion flange (front) and constant velocity joint, and on the companion flange (rear) and yoke.

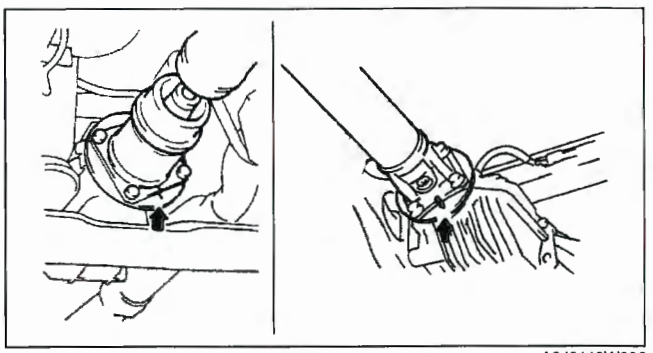

A6J6110W006

Propeller Shaft Installation Note

1. Align the alignment marks and install the propeller shaft.

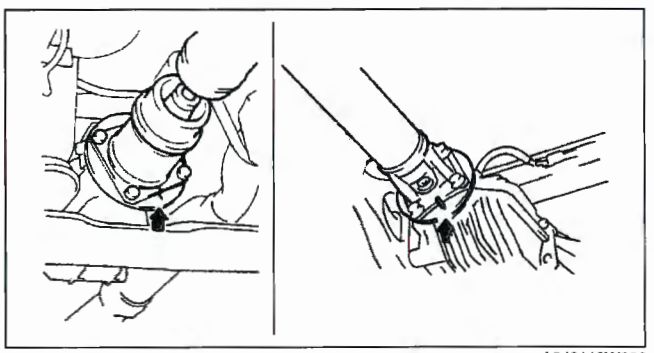

A6J6110W006

2. When installing a new propeller shaft, align the rear differential companion flange mark with the tag on the propeller shaft so that they are at the nearest position, and assemble.
3. Perform a road test and verify that there is no abnormal vibration or noise.

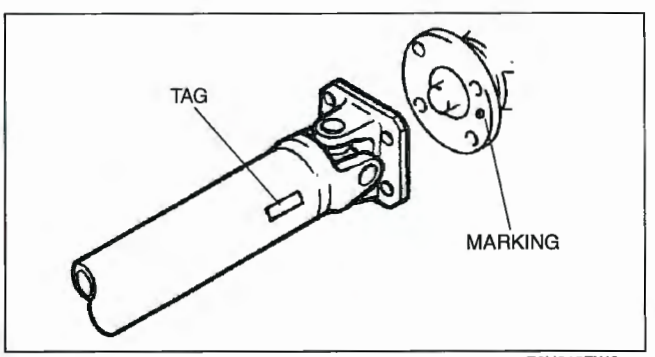

E6U315ZWC003

Propeller Shaft Heat Shield Installation Note

Caution

- **The serviceability may be negatively affected if the bolt hole is blocked when assembling the propeller shaft heat shield to the bearing support. When assembling, be careful that the rim of the propeller shaft heat shield bolt hole does not cover the bearing support bolt hole.**

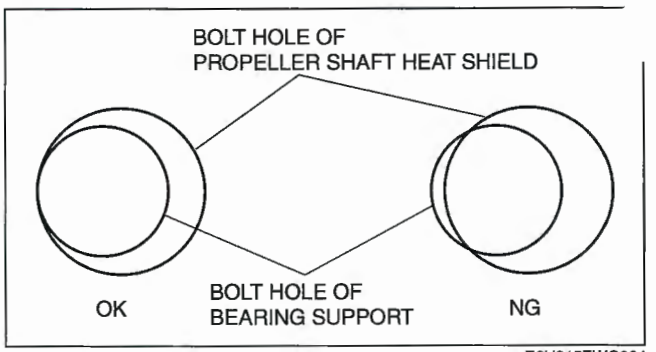

E6U315ZWC004

1. Assemble the propeller shaft heat shield to the bearing support.

Front

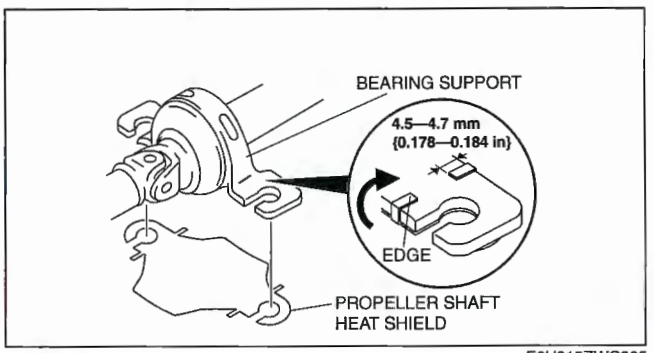

E6U315ZWC005

Rear

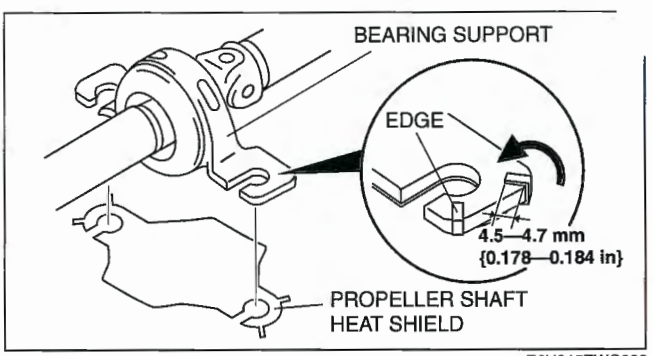

E6U315ZWC006

2. Fold back the propeller shaft heat shield tab as shown in the figure.

PROPELLER SHAFT DISASSEMBLY/ASSEMBLY

E6U031525002W04

Caution
- **If using a vise, always secure the component using an aluminum plate to prevent component damage.**

1. Disassemble in the order indicated in the table.
2. Assemble in the reverse order of disassembly.

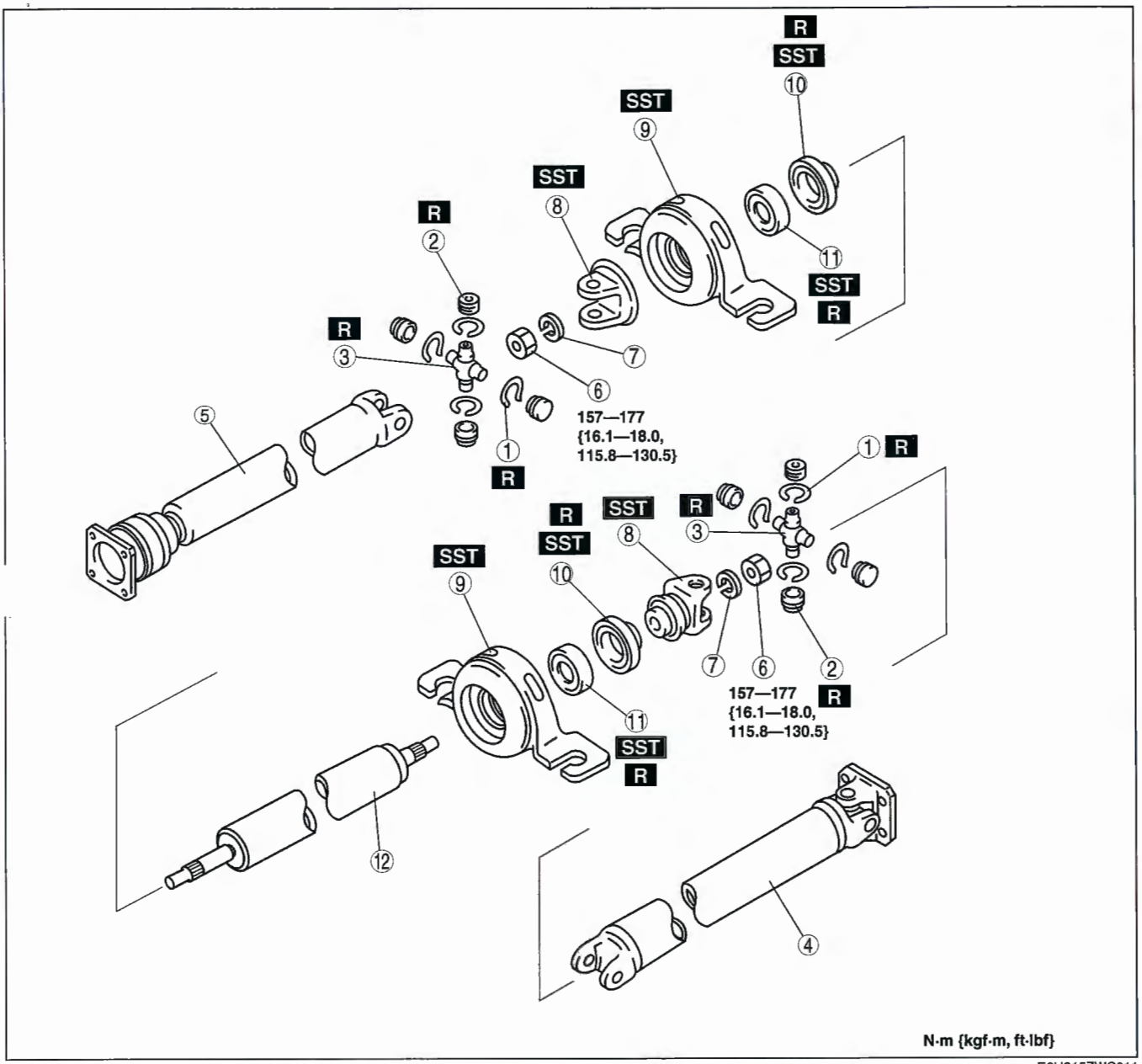

E6U315ZWC011

1	Snap ring (See 03–15–8 Snap Ring Disassembly Note.) (See 03–15–11 Bearing Cup, Snap Ring Assembly Note.)
2	Bearing cup (See 03–15–8 Bearing Cup Disassembly Note.) (See 03–15–11 Bearing Cup, Snap Ring Assembly Note.)
3	Spider
4	Rear propeller shaft
5	Front propeller shaft

6	Locknut (See 03–15–9 Locknut Disassembly Note.) (See 03–15–11 Locknut Assembly Note.)
7	Spring washer
8	Yoke (See 03–15–9 Yoke Disassembly Note.)
9	Bearing support (See 03–15–9 Bearing Support Disassembly Note.) (See 03–15–11 Bearing Support Assembly Note.)

10	Dust cover (bearing support side) (See 03–15–10 Dust Cover (Bearing Support Side), Bearing Disassembly Note.) (See 03–15–10 Dust Cover Assembly Note.)

11	Bearing (See 03–15–10 Dust Cover (Bearing Support Side), Bearing Disassembly Note.) (See 03–15–10 Bearing Assembly Note.)
12	Center propeller shaft

Note
Rear Differential side universal joint can not be disassembled.

Snap Ring Disassembly Note

1. Place an alignment mark on the yoke and front propeller shaft, or on the yoke and rear propeller shaft.
2. Secure the propeller shaft to the vise.

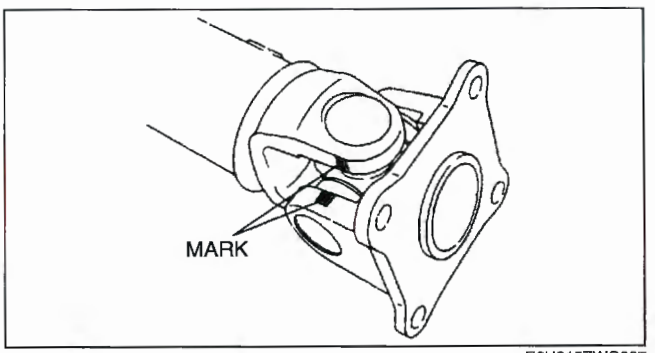

E6U315ZWC007

3. Remove the snap ring using a flathead screwdriver.

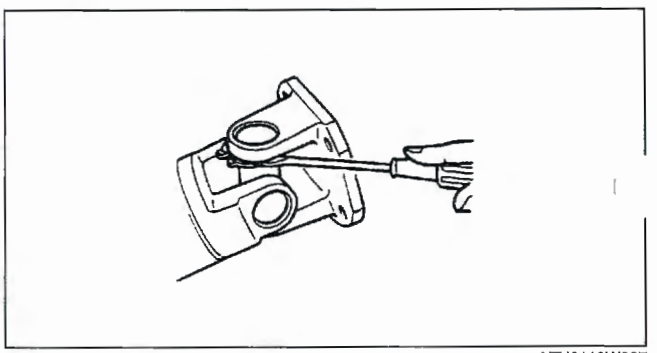
YTJ6110W007

Bearing Cup Disassembly Note

1. Using a copper hammer, raise the propeller shaft bearing cup and remove.
2. Remove the bearing cup on the opposite side by following the same procedure.
3. Remove the front propeller shaft from the yoke.
4. Secure the yoke on a vise, and remove the bearing cup by following Steps 1 and 2.

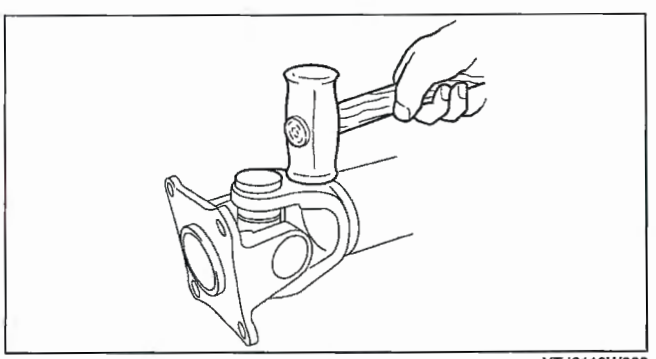
YTJ6110W008

Locknut Disassembly Note

1. Place alignment marks on the yoke and center propeller shaft.
   Secure the yoke on the vise.
2. Remove the locknut and washer.
3. Remove the yoke using the **SSTs**.

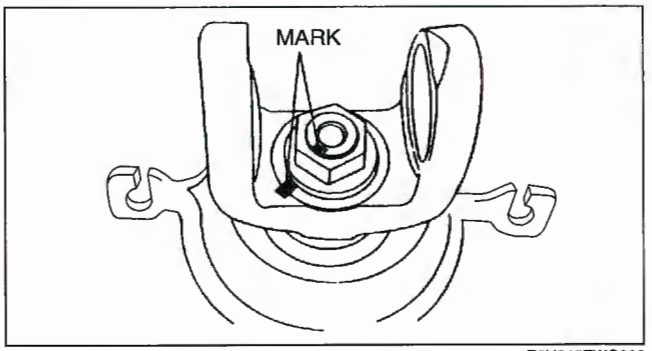

E6U315ZWC008

Yoke Disassembly Note

1. Remove the yoke using the **SST**.

Front

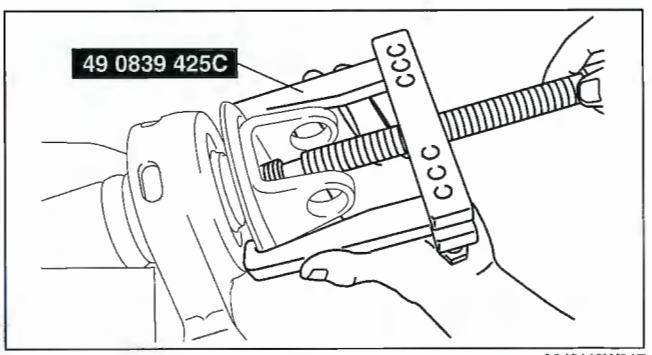

A6J6110W017

Rear

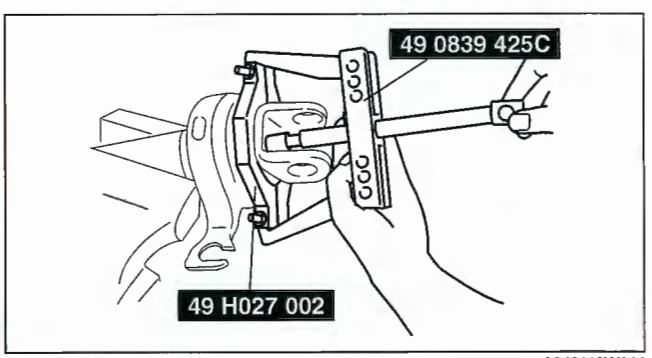

A6J6110W011

Bearing Support Disassembly Note

1. Remove the bearing support using the **SSTs**.

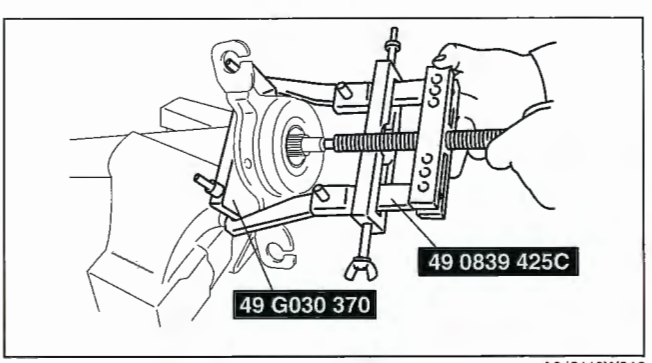

A6J6110W012

Dust Cover (Bearing Support Side), Bearing Disassembly Note

1. Remove the bearing and dust cover (bearing support side) from the bearing support using the **SSTs** and a press.

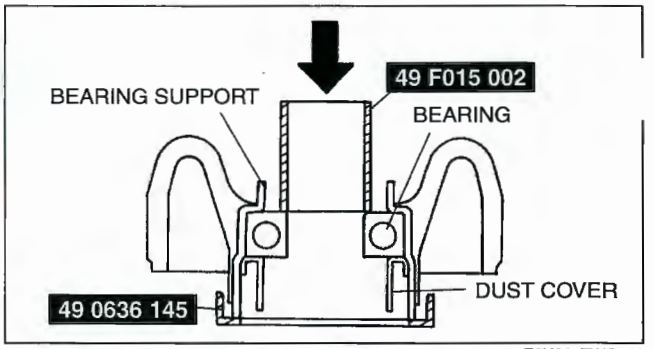

E6U315ZWC009

Bearing Assembly Note

1. Assemble the bearing to the bearing support using the **SSTs**.

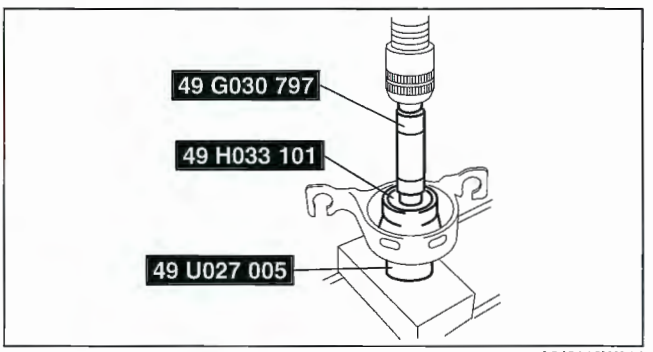

A6J6110W014

Dust Cover Assembly Note

1. Assemble the dust cover to the bearing support using the **SSTs** and a press.

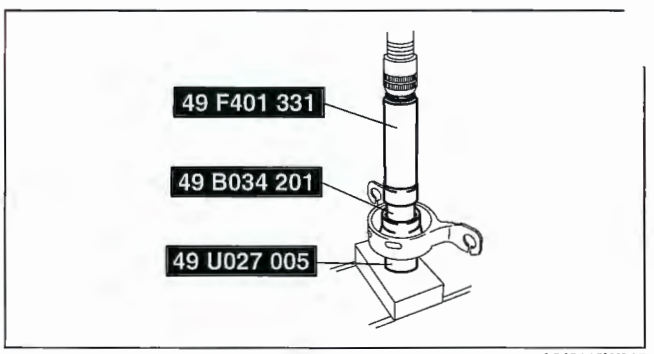

A6J6110W015

Bearing Support Assembly Note

1. Assemble the bearing support to the propeller shaft using the **SSTs**.

Front

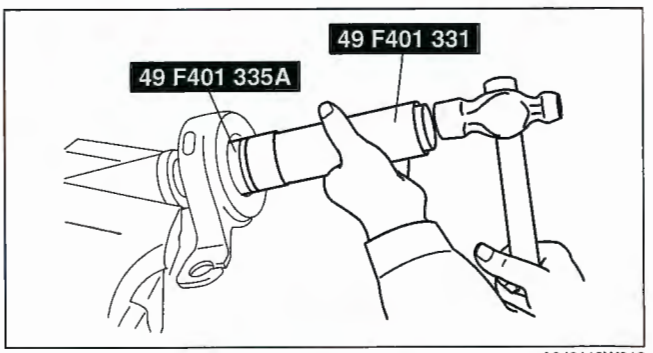

A6J6110W018

Rear

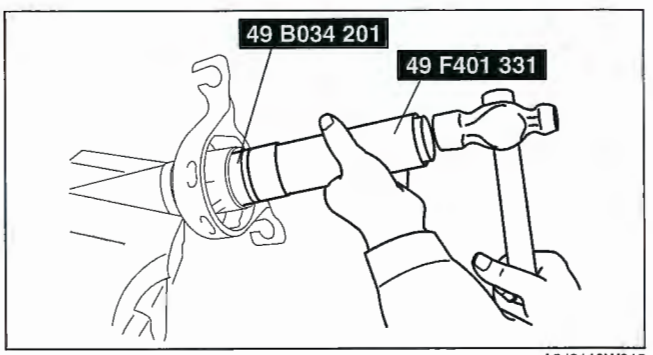

A6J6110W019

Locknut Assembly Note

1. Align the alignment marks on the propeller shaft and yoke, and assemble.

Tightening Torque
157—177 N·m
{16.1—18.0 kgf·m, 115.8—130.5 ft·lbf}

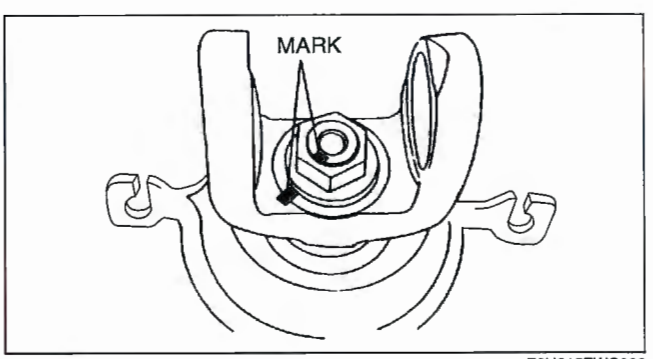

E6U315ZWC008

Bearing Cup, Snap Ring Assembly Note

1. Set the new spider on the yoke and assemble a new bearing cup until the snap ring groove can be seen.
2. Assemble the opposite side by following the same procedure.
3. Insert the bearing cup and adjust it so that the snap ring groove has the largest width and both sides have the same groove width.

Caution
- **Use snap rings with the same thickness on both sides.**

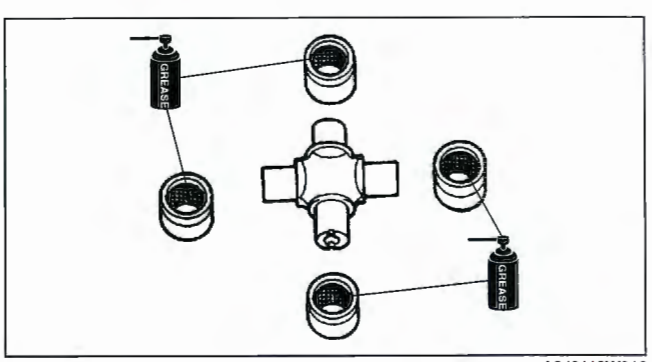

A6J6110W016

4. Measure the bearing cup groove width and install a new snap ring of the proper size.

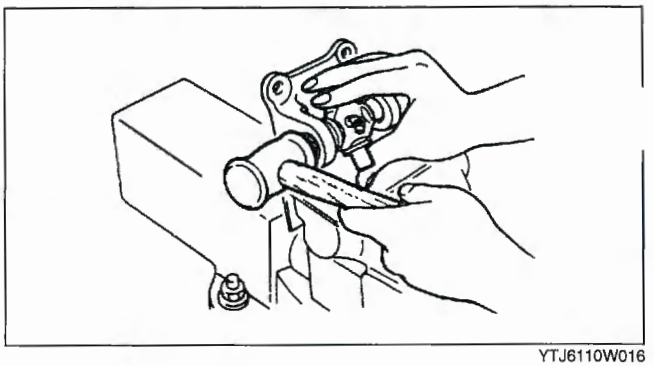
YTJ6110W016

Snap ring thickness
1.45 mm {0.0571 in}, 1.48 mm {0.0583 in}, 1.51 mm {0.0594 in}, 1.54 mm {0.0606 in}, 1.57 mm {0.0618 in}, 1.60 mm {0.0630 in}, 1.63 mm {0.0642 in}

5. Lightly tap the yoke using a copper hammer and press the snap ring to the yoke.
6. Verify that the spider has no excessive play.
7. Align the propeller shaft and yoke with the alignment mark and install.
8. Assemble the bearing cup and snap ring by following Steps 1-6.
9. Lightly tap the universal joint outer edge using a plastic hammer to adjust the component to the proper position. (See 03–15–12 PROPELLER SHAFT INSPECTION.)

PROPELLER SHAFT INSPECTION

E6U031525002W05

1. Disassemble the propeller shaft.
2. Measure the propeller shaft center runout using the dial gauge.
   - If it exceeds the maximum specification, replace the propeller shaft as a single component.

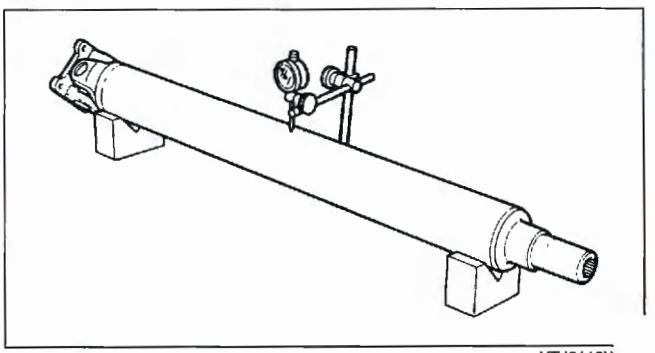
YTJ6110W

Maximum propeller shaft runout
0.3 mm {0.012 in}

3. Inspect the play and rotation of the joint by turning the universal joint in the directions shown by the arrows.
   Rear Differential side
   - If it is not within the specification, replace the rear propeller shaft.

   Others
   - If it is not within the specification, adjust by choosing the proper snap ring.

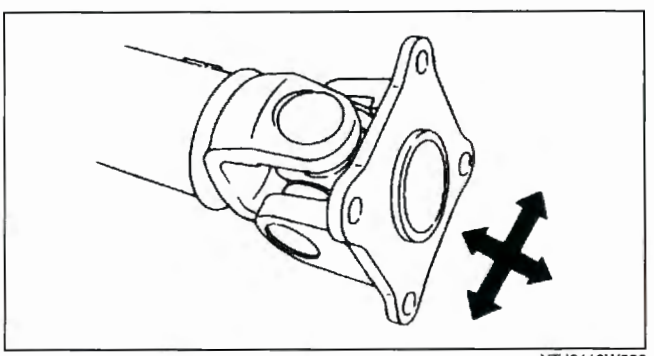
YTJ6110W020

Propeller shaft starting torque
Rear Differential side: 0.29—0.98 N·m {3.0—9.9 kgf·cm, 2.6—8.6 in·lbf}
Others: 0.29—1.18 N·m {3.0—12.0 kgf·cm, 2.6—10.4 in·lbf}

03–16 TRANSFER

TRANSFER LOCATION INDEX 03–16–1
TRANSFER OIL INSPECTION 03–16–2
TRANSFER OIL REPLACEMENT 03–16–2
TRANSFER OIL SEAL REPLACEMENT 03–16–2
TRANSFER OIL COOLER REMOVAL/INSTALLATION 03–16–3
TRANSFER REMOVAL/INSTALLATION 03–16–3
Transfer Bracket Installation Note 03–16–5
No.1 Engine Mount Installation Note ... 03–16–5

TRANSFER LOCATION INDEX

E6U031600000W01

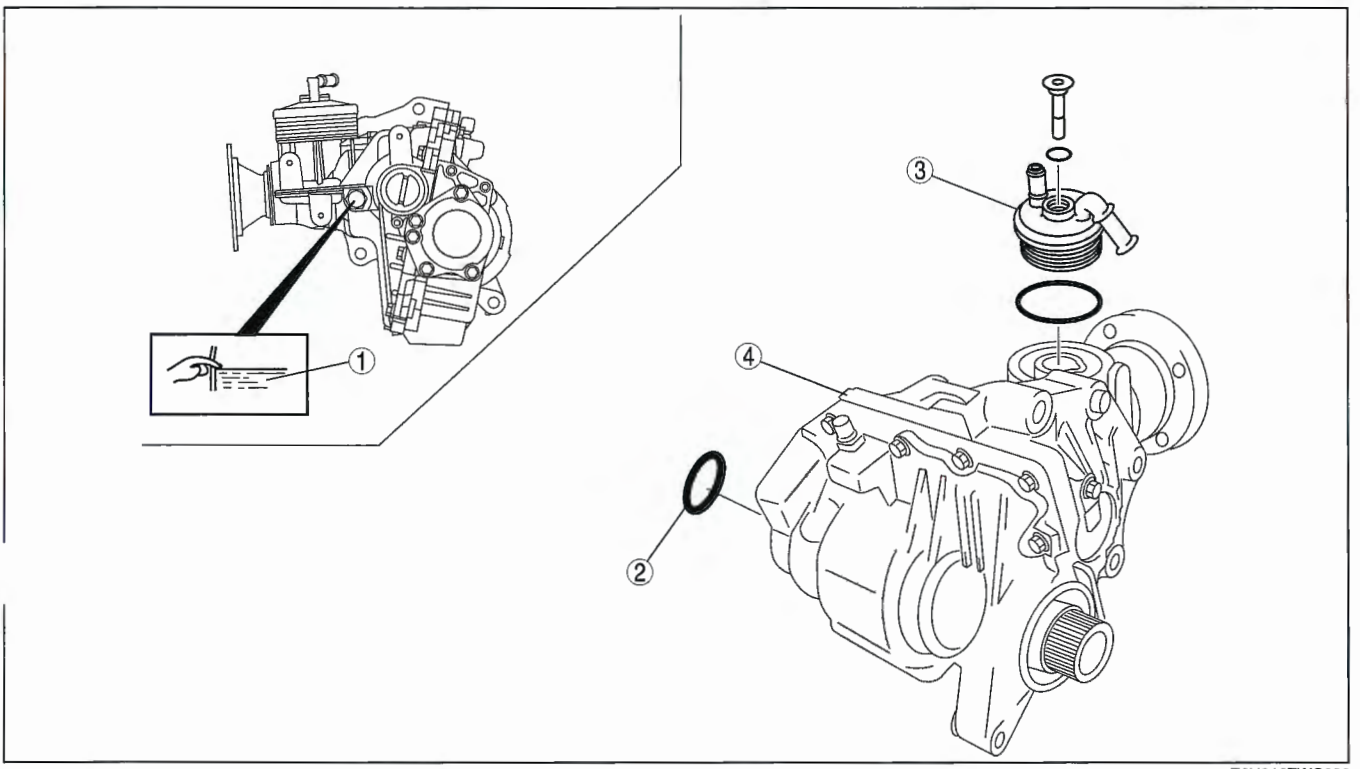

E6U316ZWC006

1	Transfer oil (See03–16–2 TRANSFER OIL INSPECTION.) (See03–16–2 TRANSFER OIL REPLACEMENT.)
2	Transfer Oil seal (See03–16–2 TRANSFER OIL SEAL REPLACEMENT.)

3	Transfer oil cooler (See03–16–3 TRANSFER OIL COOLER REMOVAL/INSTALLATION.)
4	Transfer (See03–16–3 TRANSFER REMOVAL/INSTALLATION.)

TRANSFER OIL INSPECTION

E6U031600000W02

1. Park the vehicle on level ground.
2. Remove the oil level plug and with the washer.
3. Verify that the oil is near the brim of the plug port.
   - If the oil level is low, add the specified amount and type of oil through the oil level plug hole.

Transfer oil
Specified oil grade: API Service GL-5
Specified oil viscosity: SAE 80W-90

4. Tighten the oil level plug with a new washer.

Tightening torque
39.2—58.8 N·m {4.0—5.9 kgf·m, 29.0—43.3 ft·lbf}

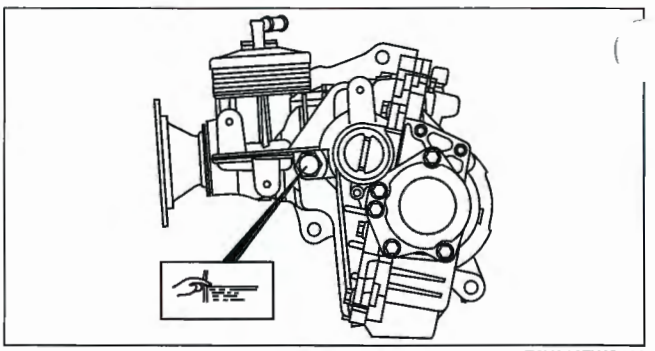

E6U316ZWC002

TRANSFER OIL REPLACEMENT

E6U031600000W03

1. Remove the drain plug with the washer.
2. Drain the oil into a suitable container.
3. Tighten the drain plug with a new washer.

Tightening torque
39.2—58.8 N·m {4.0—5.9 kgf·m, 29.0—43.3 ft·lbf}

4. Remove the oil level plug with the washer and add the specified amount and type of oil through the oil level plug hole until the level reaches the bottom of the oil level plug hole.

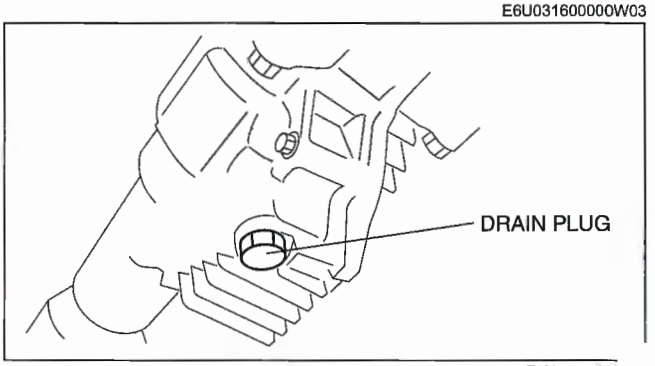

E6U316ZWC

Transfer oil
Specified oil grade: API Service GL-5
Specified oil viscosity: SAE 80W-90
Capacity (approximate quantity): 1.2 L {1.3 US qt, 1.1 Imp qt}

5. Tighten the oil level plug with a new washer.

Tightening torque
39.2—58.8 N·m {4.0—5.9 kgf·m, 29.0—43.3 ft·lbf}

TRANSFER OIL SEAL REPLACEMENT

E6U031600000W04

1. On level ground, jack up the vehicle and support it evenly on safety stands.
2. Drain the oil from the transfer. (See 03–16–2 TRANSFER OIL REPLACEMENT.)
3. Remove the joint shaft. (See 03–13–7 JOINT SHAFT REMOVAL/INSTALLATION [L3 WITH TC])
4. Remove the oil seals using a screwdriver.
5. Using the **SST** and a hammer, tap each new oil seal.
6. Coat the lip of each oil seal with transfer oil.
7. Install the joint shaft. (See 03–13–7 JOINT SHAFT REMOVAL/INSTALLATION [L3 WITH TC])
8. Add the specified amount and type of oil. (See 03–16–2 TRANSFER OIL REPLACEMENT.)

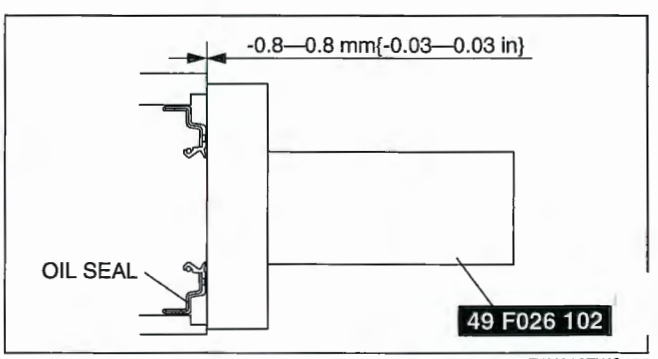

E6U316ZWC005

TRANSFER OIL COOLER REMOVAL/INSTALLATION

E6U031600000W05

1. Disconnect the propeller shaft from the transfer side. (See 03–15–4 PROPELLER SHAFT REMOVAL/INSTALLATION.)
   Drain the engine coolant. (See 01–12B–4 ENGINE COOLANT REPLACEMENT [L3 WITH TC].)
3. Drain the transfer oil into a suitable container. (See 03–16–2 TRANSFER OIL REPLACEMENT.)
4. Remove in the order indicated in the figure.
5. Install in the reverse order of removal.
6. Perform the following procedure, if the transfer has been overhauled and installed to the vehicle.
   (1) After warming up the engine, drive the vehicle and inspect for oil leakage and abnormal noise.

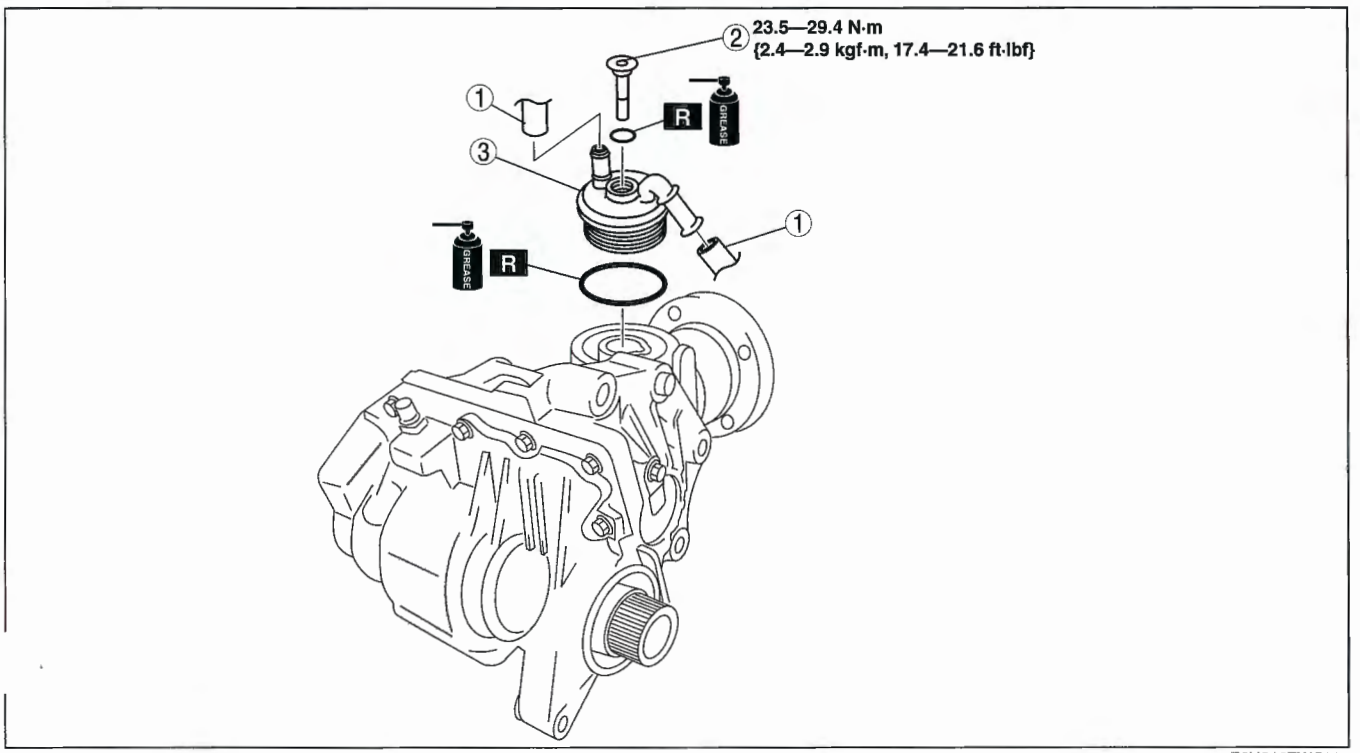

E6U316ZWC007

1	Water hose
2	Transfer oil cooler installation bolt
3	Transfer oil cooler

TRANSFER REMOVAL/INSTALLATION

E6U031600000W06

1. Disconnect the negative battery cable.
2. Remove the battery and battery tray.
3. Remove the wheels, tires and splash shields.
4. Remove the under cover.
5. Remove the steering gear and linkage, and pipe assembly installation bolts from the front crossmember, then suspend the steering gear and linkage with a cable. (See 06–12–15 STEERING GEAR AND LINKAGE REMOVAL/INSTALLATION [L3 WITH TC].)

   Pipe assembly tightening torque
   7.8—10.8 N·m {79.6—110.0 kgf·cm, 69.1—95.5 in·lbf}

6. Drain the transfer oil into a suitable container. (See 03–16–2 TRANSFER OIL REPLACEMENT.)
7. Remove the front pipe. (See 01–15B–2 EXHAUST SYSTEM REMOVAL/INSTALLATION [L3 WITH TC].)
8. Disconnect the propeller shaft from the transfer side. (See 03–15–4 PROPELLER SHAFT REMOVAL/INSTALLATION.)
9. Remove the transfer oil cooler withe the hose still connected. (See 03–16–3 TRANSFER OIL COOLER REMOVAL/INSTALLATION.)
10. Remove in the order indicated in the table.
11. Install in the reverse order of removal.
12. Add the specified amount of specified transaxle oil and transfer oil.(See 03–16–2 TRANSFER OIL INSPECTION.)

13. Warm up the engine and transaxle, inspect for oil leakage, and inspect the transfer operation.

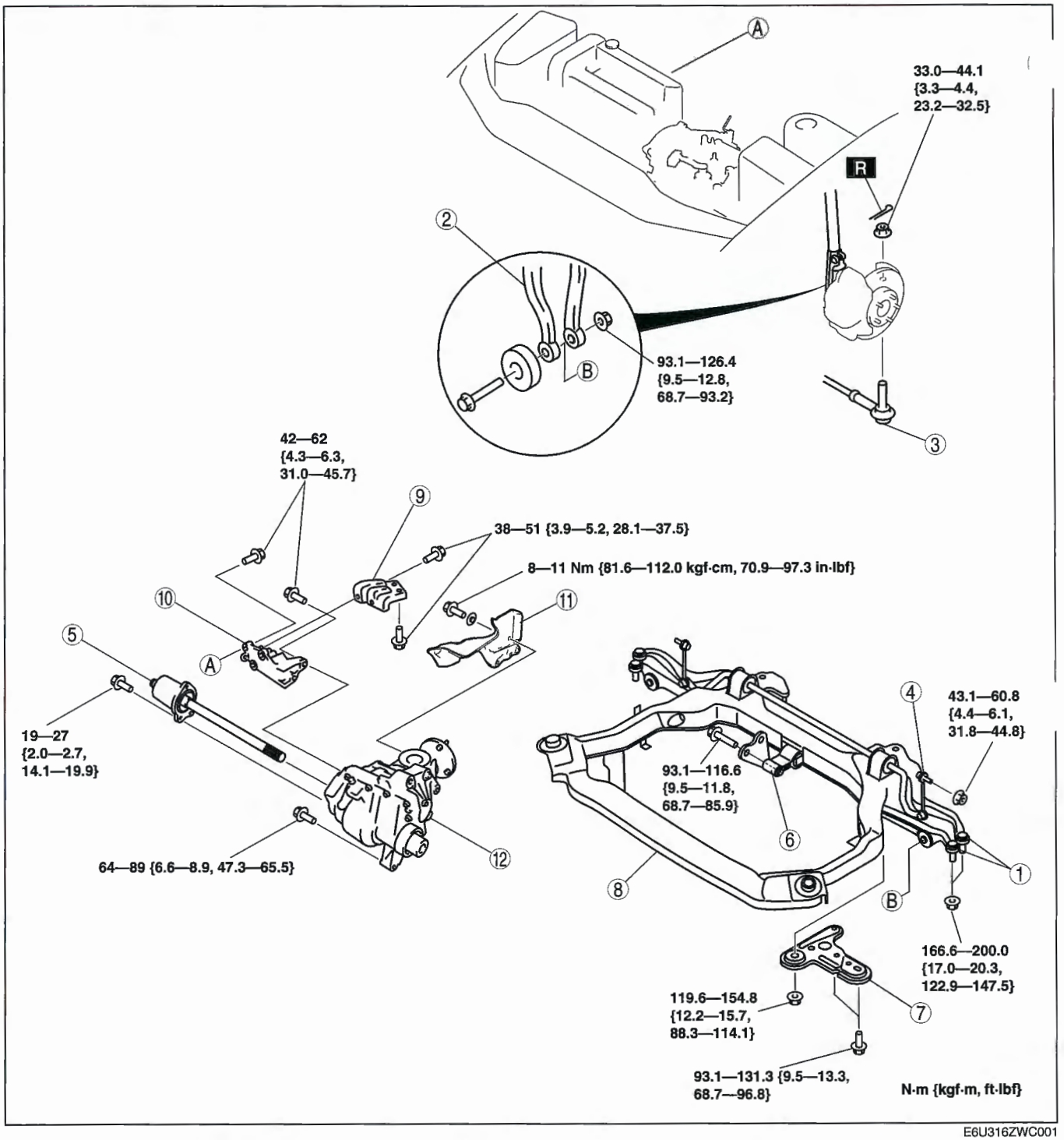

E6U316ZWC001

1	Lower arm (front, rear) ball joint (See 02–13–11 Front Lower Arm (Front) Ball Joint Removal Note)
2	Damper fork
3	Tie-rod end ball joint (See 06–12–15 STEERING GEAR AND LINKAGE REMOVAL/INSTALLATION [L3 WITH TC])
4	Stabilizer control link
5	Joint shaft (See 03–13–7 JOINT SHAFT REMOVAL/ INSTALLATION [L3 WITH TC])

6	No.1 engine mount (See 03–16–5 No.1 Engine Mount Installation Note)
7	Crossmember bracket
8	Crossmember component (See 02–13–20 FRONT CROSSMEMBER REMOVAL/INSTALLATION)
9	Catalytic converter bracket
10	Transfer bracket (See 03–16–5 Transfer Bracket Installation Note)
11	Transfer heat insulator
12	Transfer

Transfer Bracket Installation Note

1. Hand-tighten the bolt A and B.
2. Tighten the bolts in order of C, A, B, D.

Tightening torque
42—62 N·m {4.3—6.3 kgf·m, 31.0—45.7 ft·lbf}

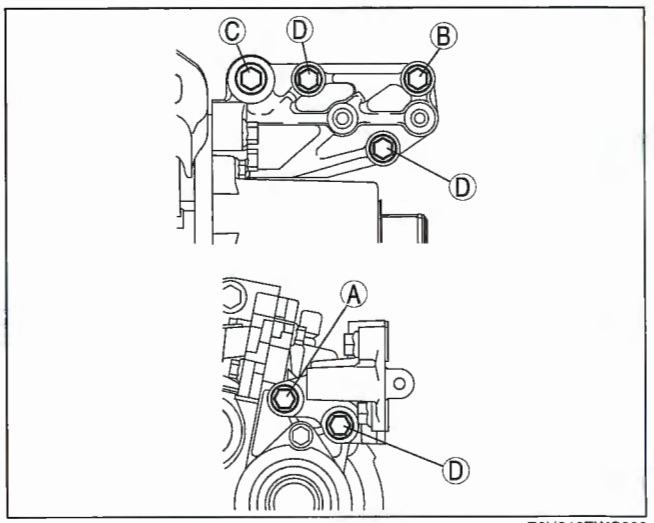

E6U316ZWC008

No.1 Engine Mount Installation Note

1. Align the hole of the No.1 engine mount rubber with the bolt hole of transaxle.
2. Hand-tighten the bolt A, B, and C.
3. Tighten the bolts in order of A, B, C.

Tightening torque
93.1—116.6 N·m {9.5—11.8 kgf·m, 68.7—85.9 ft·lbf}

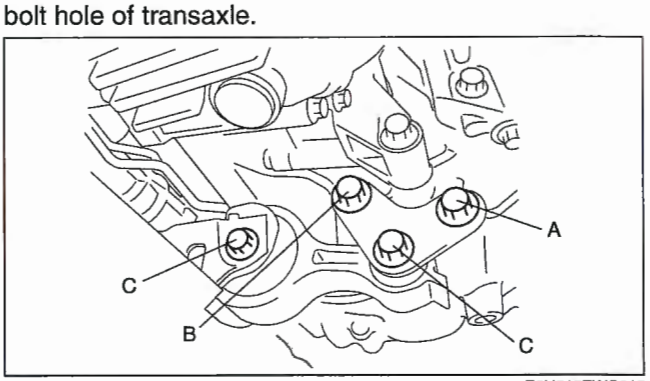

E6U515ZWC015

03–19 ALL WHEEL DRIVE (AWD)

ELECTRONIC AWD CONTROL SYSTEM LOCATION INDEX 03–19–1
DIFFERENTIAL OIL TEMPERATURE SENSOR INSPECTION 03–19–2
DIFFERENTIAL OIL TEMPERATURE SENSOR REMOVAL/INSTALLATION 03–19–2
AWD SOLENOID INSPECTION 03–19–3
AWD CONTROL MODULE INSPECTION 03–19–3
Terminal Voltage List (Reference) 03–19–3
AWD CONTROL MODULE REMOVAL/INSTALLATION 03–19–4
COUPLING COMPONENT REMOVAL/INSTALLATION 03–19–5
Coupling Component Removal Note 03–19–5
Coupling Component Installation Note 03–19–6
COUPLING COMPONENT DISASSEMBLY 03–19–6
Locknut Disassembly Note 03–19–7
Companion Flange Disassembly Note 03–19–7
Output Shaft Disassembly Note 03–19–8
Bearing Disassembly Note 03–19–8
COUPLING COMPONENT ASSEMBLY 03–19–9
Output Shaft Assembly Note 03–19–10
Bearing Assembly Note 03–19–10
Coupling Case Assembly Note 03–19–10
Oil Seal Assembly Note 03–19–10
Companion Flange Assembly Note 03–19–11
Locknut Assembly Note 03–19–11

ELECTRONIC AWD CONTROL SYSTEM LOCATION INDEX

E6U031927100W01

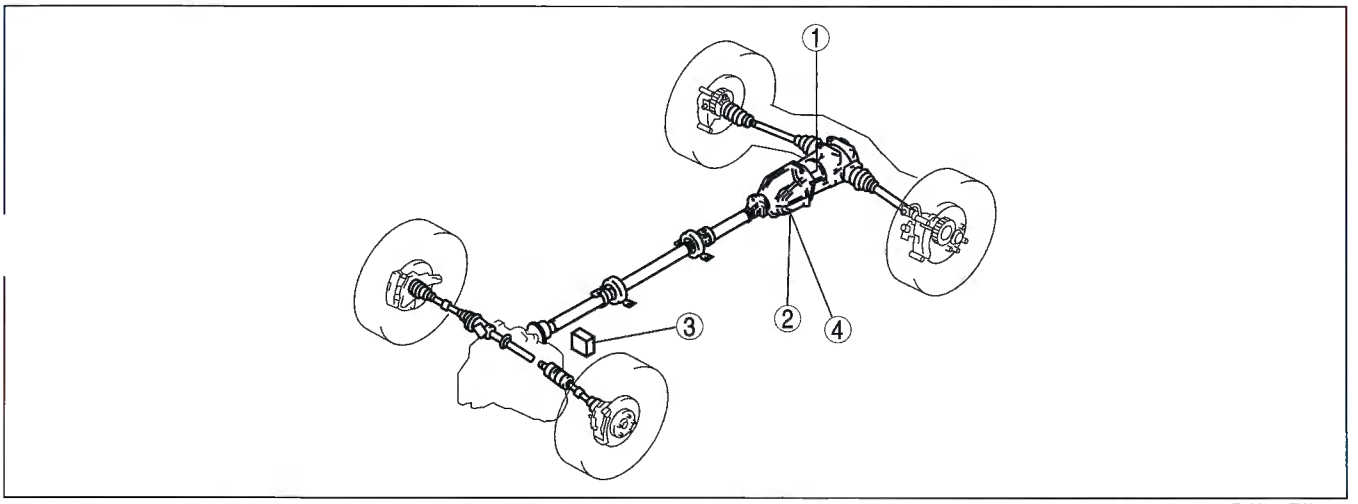

E6U314ZW7001

1	Differential oil temperature sensor (See 03–19–2 DIFFERENTIAL OIL TEMPERATURE SENSOR INSPECTION) (See 03–19–2 DIFFERENTIAL OIL TEMPERATURE SENSOR REMOVAL/INSTALLATION)
2	AWD solenoid (See 03–19–3 AWD SOLENOID INSPECTION)
3	AWD control module (See 03–19–3 AWD CONTROL MODULE INSPECTION) (See 03–19–4 AWD CONTROL MODULE REMOVAL/INSTALLATION)
4	Coupling component (See 03–19–5 COUPLING COMPONENT REMOVAL/INSTALLATION) (See 03–19–6 COUPLING COMPONENT DISASSEMBLY) (See 03–19–9 COUPLING COMPONENT ASSEMBLY)

DIFFERENTIAL OIL TEMPERATURE SENSOR INSPECTION

E6U031927100W02

Warning
- **Hot differential oil may cause severe burns. Do not perform maintenance while differential oil is hot.**

1. Disconnect the negative battery cable.
2. Disconnect the differential oil temperature sensor connector and remove the differential oil temperature sensor.
3. Wrap the differential oil temperature sensor with plastic wrap and immerse it into a beaker filled with water. Gradually raise the water temperature, and measure resistance between differential oil temperature sensor terminals A and B.
   - If not as specified, inspect the harness for continuity. If there is normal continuity between the terminals, replace the differential oil temperature sensor.

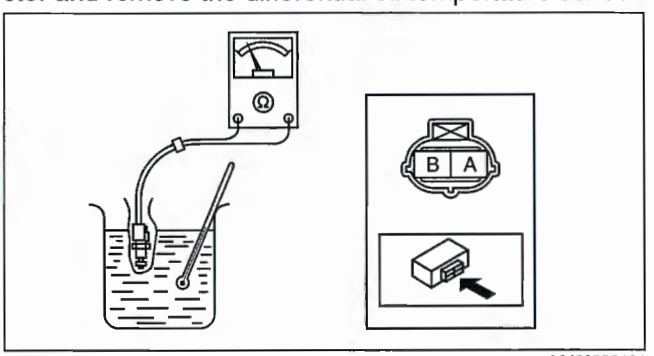

A6J63222101

Differential oil temperature sensor specification

Water temperature (°C {°F})	Resistance (kirohm)
0 {32}	91—100
10 {50}	56—61
20 {68}	35—39
30 {86}	23—25
40 {104}	14—17
50 {122}	10—11
60 {140}	7.1—7.9
70 {158}	5.0—5.6
80 {176}	3.6—4.0

4. Install the differential oil temperature sensor and connect the connector.
5. Connect the negative battery cable.

DIFFERENTIAL OIL TEMPERATURE SENSOR REMOVAL/INSTALLATION

E6U031927100W03

Warning
- **Hot differential oil may cause severe burns. Do not perform maintenance while differential oil is hot.**

1. Disconnect the negative battery cable.
2. Disconnect the differential oil temperature sensor connector.
3. Remove the differential oil temperature sensor.
4. Apply differential oil to the O-ring.
5. Install the differential oil temperature sensor.

   Tightening torque
   12.7—17.3 N·m {1.3—1.7 kgf·m, 9.4—12.7 ft·lbf}

6. Connect the differential oil temperature sensor connector.
7. Connect the negative battery cable.

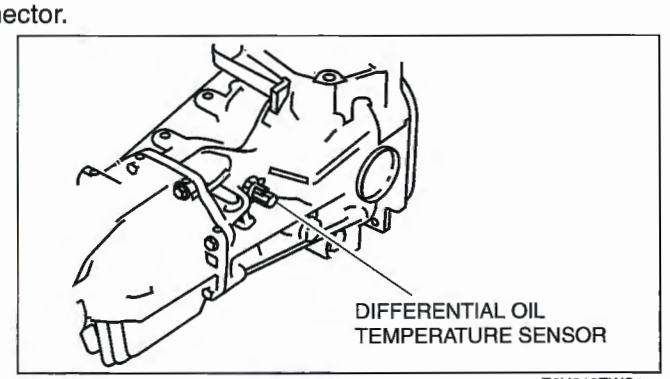

E6U318ZWC

AWD SOLENOID INSPECTION

E6U031927100W04

1. Disconnect the negative battery cable.
2. Disconnect the AWD solenoid connector. Measure resistance between AWD solenoid connector terminals A and B.
   - If the resistance is not within the specification, replace the coupling unit.

   AWD solenoid resistance
   1.5—2.0 ohms
   (Rear differential oil temperature at 20°C {68°F})

4. Connect the AWD solenoid connector.
5. Connect the negative battery cable.

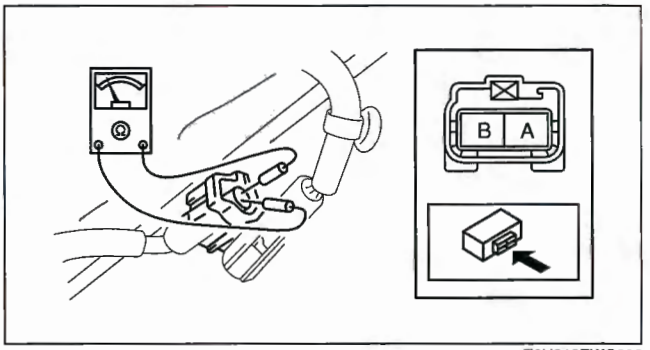

E6U318ZWC003

AWD CONTROL MODULE INSPECTION

E6U031927100W05

Note
- AWD CM terminal voltage can vary depending on measuring conditions and vehicle aging, resulting in misdiagnosis. Therefore, it is necessary to perform an overall inspection of the input/output systems and AWD CM to determine which part is malfunctioning.
- With the AWD CM connector connected, measure voltage by connecting the voltmeter negative (-) lead to the body ground and positive (+) lead to each AWD CM terminal.

1. Measure voltage or resistance at each AWD CM terminal using a voltmeter and an ohmmeter.
   - If not as specified, replace the AWD CM.

Terminal Voltage List (Reference)

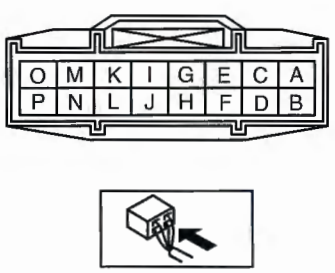

A6J63222104

Terminal	Signal	Input/ output	Connected to	Measuring item	Test condition		Voltage (V)/ Continuity	Inspection location in case of failure
A	Differential oil temperature sensor signal	Input	Differential oil temperature sensor	Voltage	Ignition key ON	Differential oil temperature 20°C {68°F}	3.0	• Inspect differential oil temperature sensor • Inspect related harness
						Differential oil temperature 60°C {140°F}	1.4	
B	Parking brake switch signal	Input	Parking brake switch	Voltage	Ignition key ON	Parking brake lever pull	1.0 or below	• Inspect parking brake switch • Inspect related harness
						Parking brake lever release	B+	
C	Differential oil temperature sensor GND	—	Differential oil temperature sensor	Continuity	Any condition		Yes	• Inspect related harness
D	—	—	—	—	—	—	—	—
E	—	—	—	—	—	—	—	—
F	—	—	—	—	—	—	—	—
G	CAN-H	Input/ output	—	Perform measurement during DTC inspection.				—

Terminal	Signal	Input/ output	Connected to	Measuring item	Test condition	Voltage (V)/ Continuity	Inspection location in case of failure
H	CAN-L	Input/ output	—	Perform measurement during DTC inspection.			—
I	Power supply (Ignition switch)	Input	Ignition key	Voltage	Ignition key ON	B+	• Inspect fuse • Inspect related harness
					Ignition key OFF	1.0 or below	
J	—	—	—	—	— —	—	—
K	Power supply (Main)	Input	Battery	Voltage	Any condition	B+	• Inspect fuse • Inspect related harness
L	—	—	—	—	— —	—	—
M	—	—	—	—	— —	—	—
N	Ground	—	Ground	Voltage	Any condition	0	• Inspect related harness
O	AWD solenoid (+)	Output	AWD solenoid	Voltage	Ignition key ON	B+	• AWD solenoid • Inspect related harness
					Ignition key OFF	1.0 or below	
P	AWD solenoid (-)	Output	AWD solenoid	Voltage	Ignition key ON	B+	• AWD solenoid • Inspect related harness
					Ignition key OFF	1.0 or below	

AWD CONTROL MODULE REMOVAL/INSTALLATION

E6U031927100W06

1. Disconnect the negative battery cable.
2. Remove the lower panel.
3. Remove in the order indicated in the table.
4. Install in the reverse order of removal.

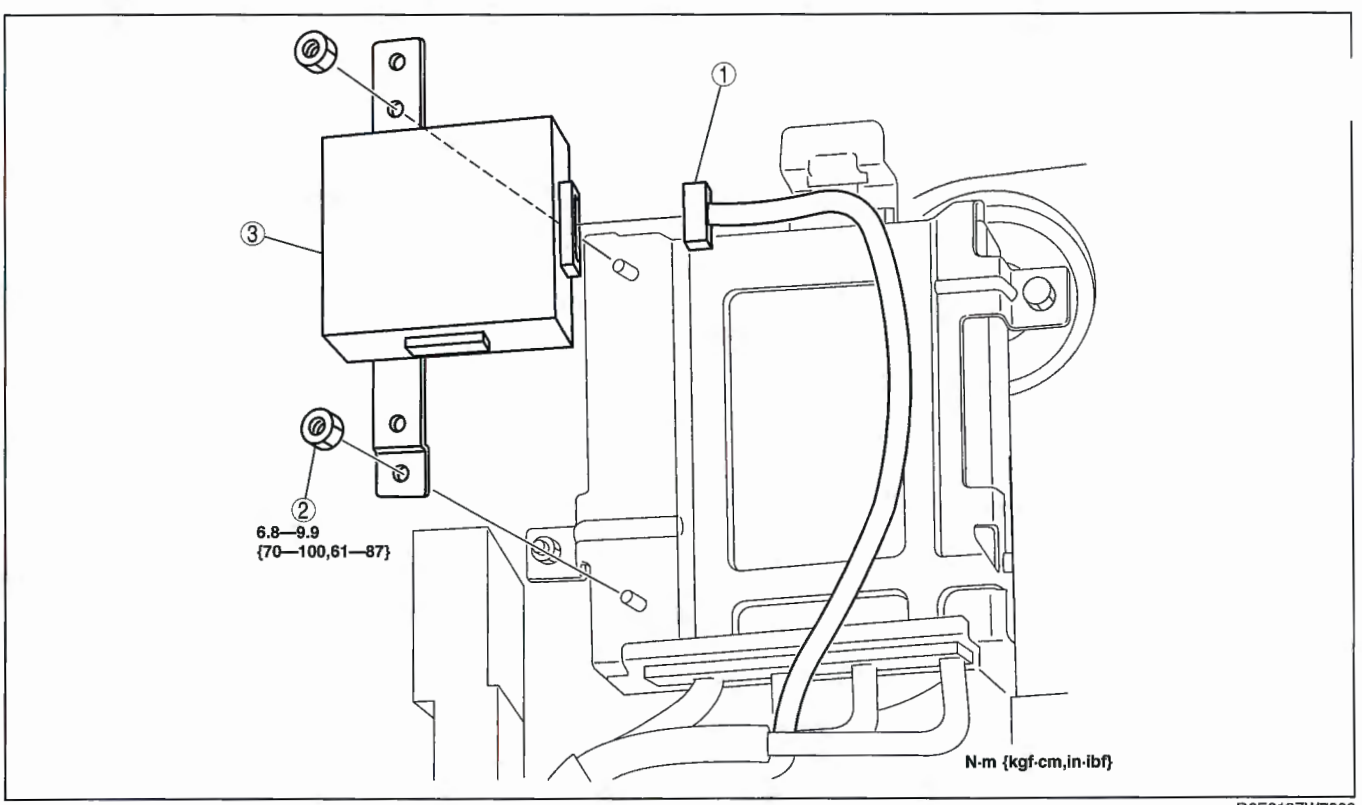

D6E318ZW7003

1	Connector
2	Nut
3	AWD CM

COUPLING COMPONENT REMOVAL/INSTALLATION

E6U031927100W07

1. Drain the differential oil into a container.
2. Remove the after silencer, presilencer, and the catalytic converter. (See 01–15B–2 EXHAUST SYSTEM REMOVAL/INSTALLATION [L3 WITH TC].)
3. Remove the propeller shaft. (See 03–15–4 PROPELLER SHAFT REMOVAL/INSTALLATION.)
4. Remove in the order indicated in the table.
5. Install in the reverse order of removal.
6. Add differential oil.

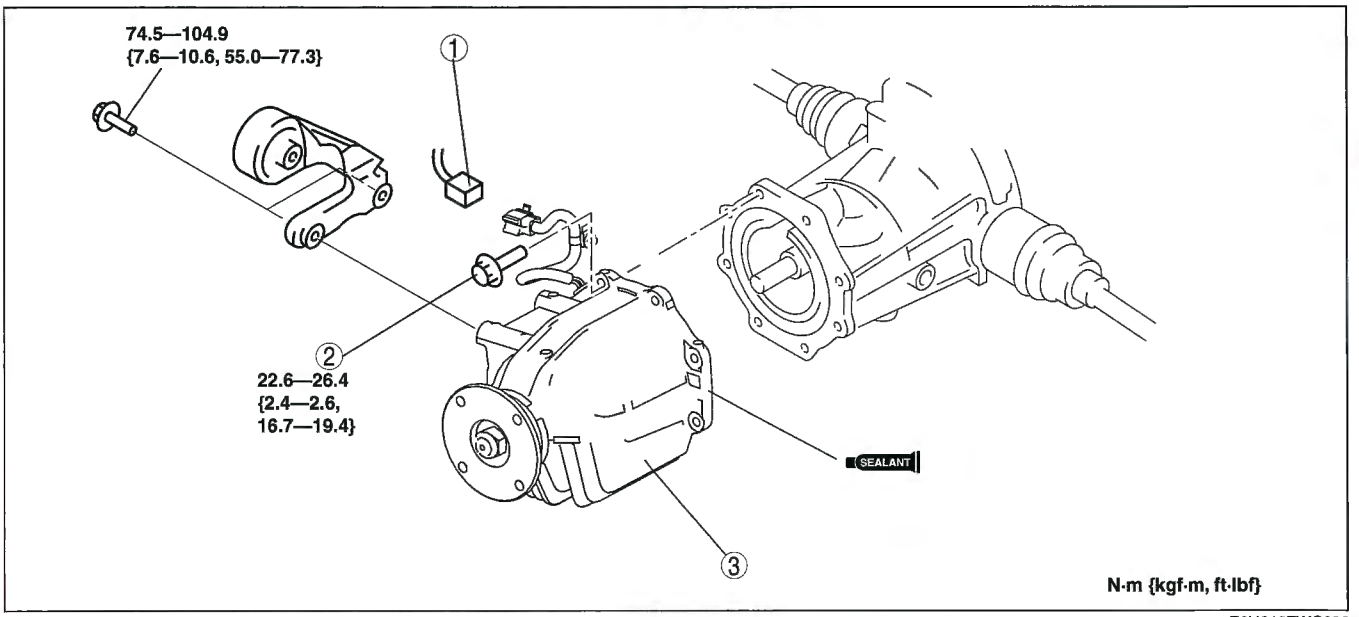

E6U318ZWC006

1	AWD solenoid connector
2	Bolt

3	Coupling component (See 03–19–5 Coupling Component Removal Note) (See 03–19–6 Coupling Component Installation Note)

Coupling Component Removal Note

1. Support the coupling unit with a transmission jack.
2. Cut away the coupling unit using an oil pan seal cutter.

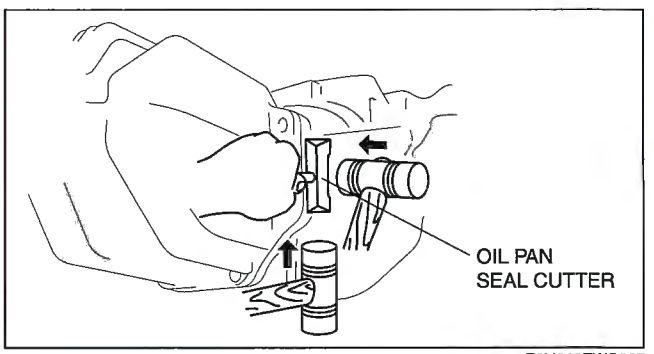

E6U318ZWC007

Coupling Component Installation Note

Note

- Clean away the old sealant before applying the new sealant.
- Install the coupling unit within **10 min** after applying sealant.
- Allow the sealant to set at least **30 min** after installation before filling the differential with the specified oil.

1. Apply sealant to the coupling case surface that contacts the rear differential case.
2. Install the coupling unit to the rear differential so that the two tabs on the coupling unit engage the rear differential grooves (two locations).

Tightening torque
22.6—26.4 N·m {2.4—2.6 kgf·m, 16.7—19.4 ft·lbf}

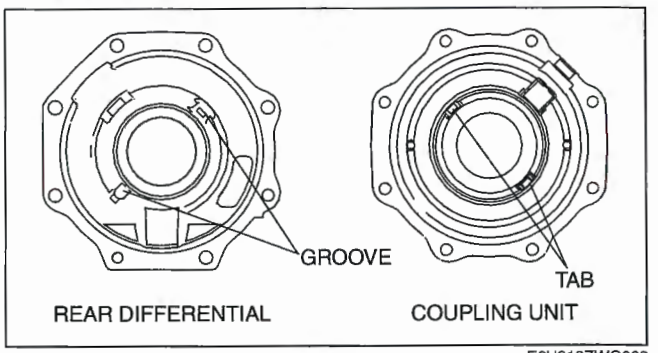

E6U318ZWC008

COUPLING COMPONENT DISASSEMBLY

E6U031927100W08

Warning

- **The engine stand is equipped with a self-lock mechanism, however, if the coupling unit is in a tilted condition, the self-lock mechanism could become inoperative. If the coupling unit unexpectedly rotates it could cause injury, therefore do not maintain the coupling unit in a tilted condition. When turning the coupling unit, grasp the rotation handle firmly.**

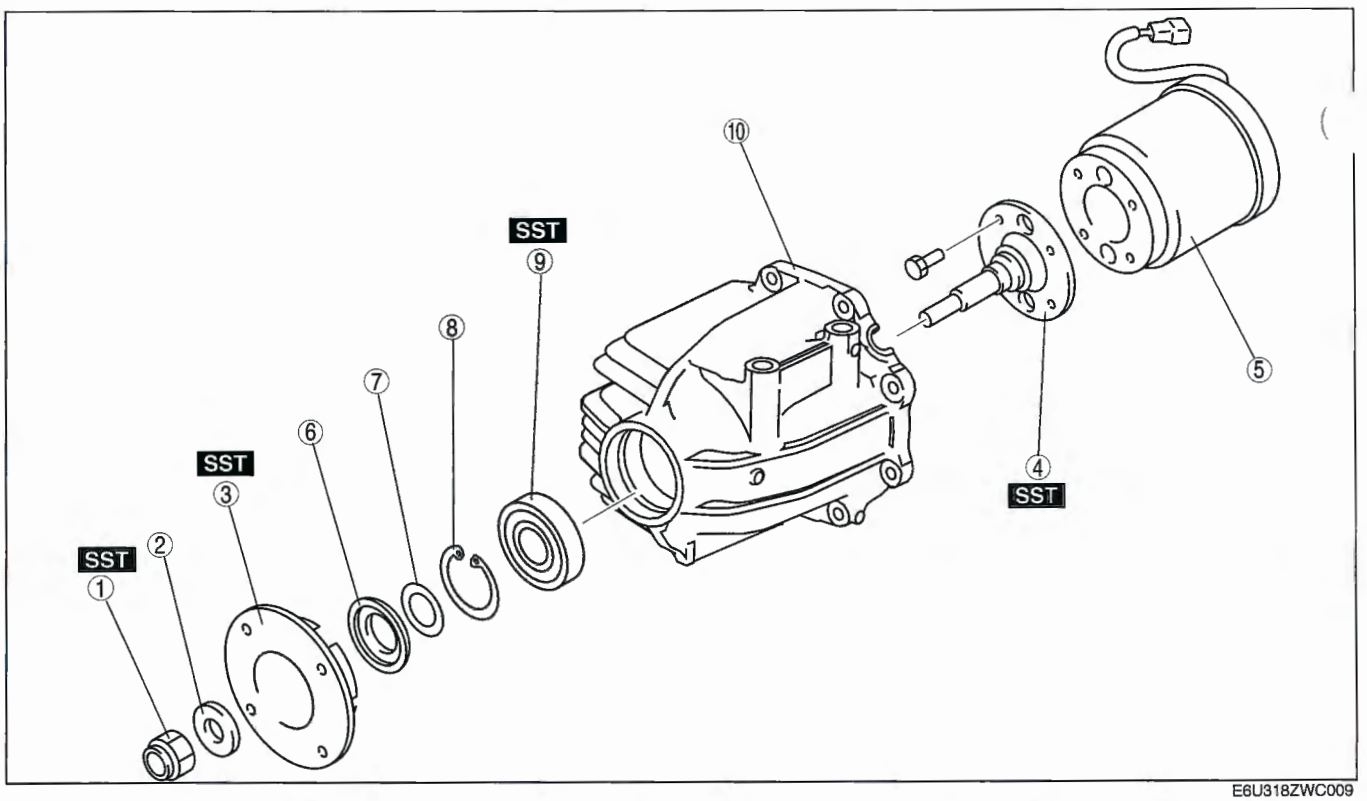

E6U318ZWC009

1	Locknut (See 03–19–7 Locknut Disassembly Note)
2	Washer
3	Companion flange (See 03–19–7 Companion Flange Disassembly Note)
4	Output shaft (See 03–19–8 Output Shaft Disassembly Note)

5	Coupling component
6	Oil seal
7	Shim
8	Retaining ring
9	Bearing (See 03–19–8 Bearing Disassembly Note)
10	Coupling case

Locknut Disassembly Note

1. Assemble the **SSTs** to the engine stand.

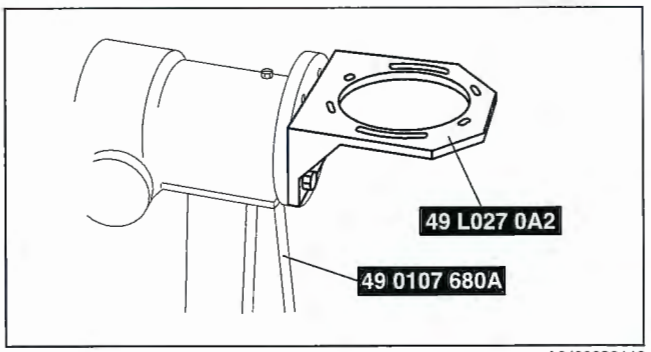

A6J63222110

2. Install the coupling unit to the **SSTs** as shown.

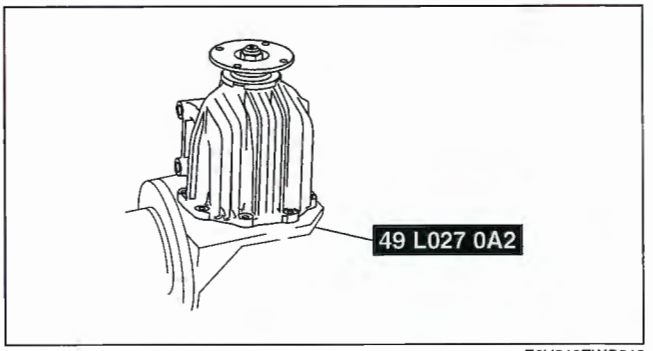

E6U318ZWC010

3. Secure the companion flange using the **SST**, and remove the locknut.

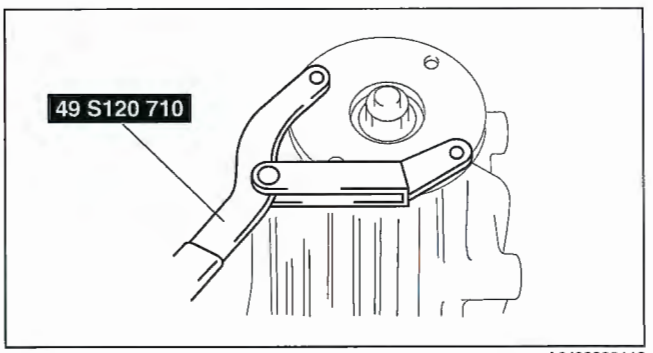

A6J63222112

Companion Flange Disassembly Note

1. Remove the companion flange using the **SST**.

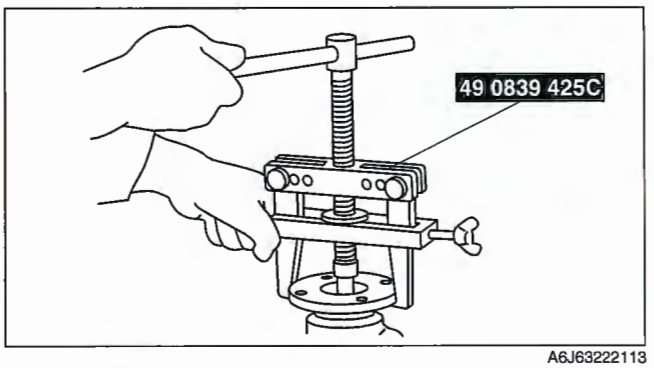

A6J63222113

Output Shaft Disassembly Note

1. Remove the coupling unit from the **SST**.
2. Install the coupling unit to the press as shown, and remove the output shaft together with the coupling unit.
3. Install the companion flange to the output shaft.

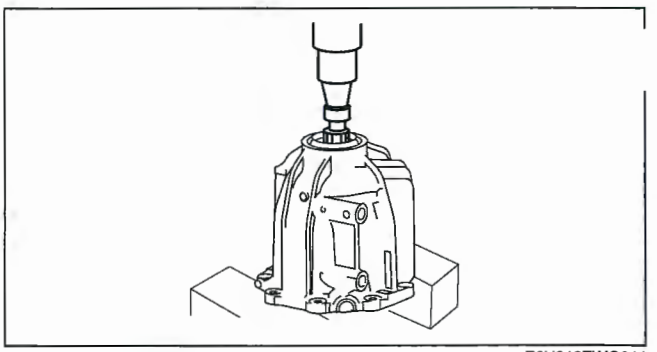

E6U318ZWC011

4. Secure the companion flange using the **SST**, and remove the bolts.
5. Remove the output shaft.

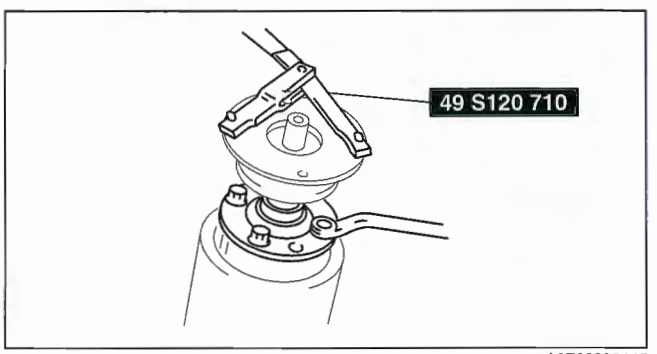

A6E63222115

Bearing Disassembly Note

1. Remove the bearing using the **SSTs** and a press.

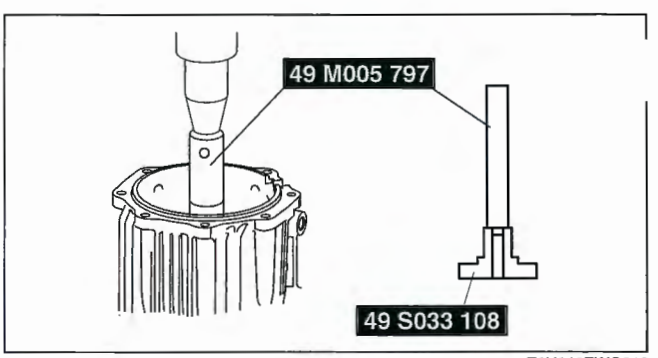

E6U318ZWC012

COUPLING COMPONENT ASSEMBLY

E6U031927100W09

Warning

- **The engine stand is equipped with a self-lock mechanism, however, if the coupling unit is in a tilted condition, the self-lock mechanism could become inoperative. If the coupling unit unexpectedly rotates it could cause injury, therefore do not maintain the coupling unit in a tilted condition. When turning the coupling unit, grasp the rotation handle firmly.**

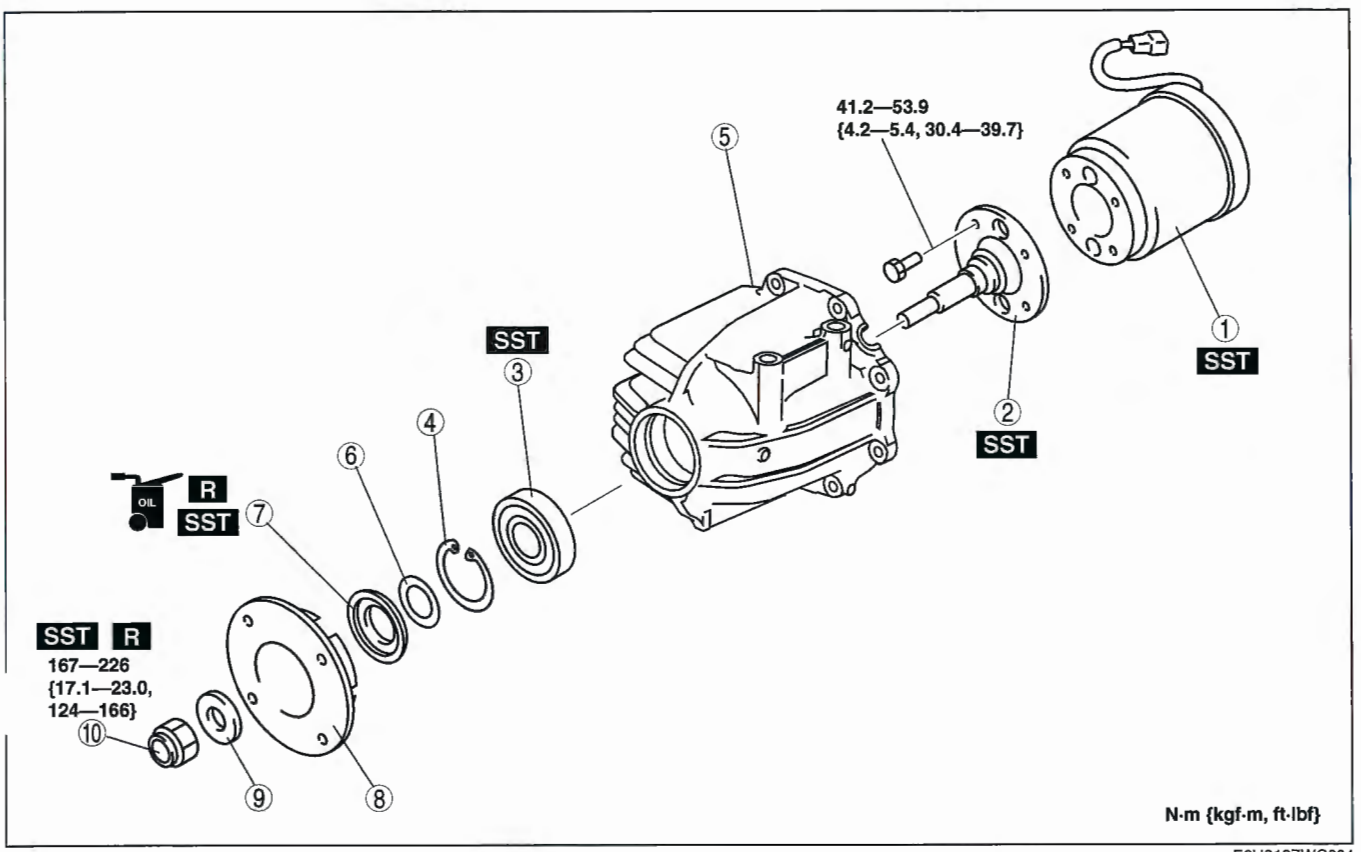

E6U318ZWC004

1	Coupling component
2	Output shaft (See 03–19–10 Output Shaft Assembly Note)
3	Bearing (See 03–19–10 Bearing Assembly Note)
4	Retaining ring
5	Coupling case (See 03–19–10 Coupling Case Assembly Note)

6	Shim
7	Oil seal (See 03–19–10 Oil Seal Assembly Note)
8	Companion flange (See 03–19–11 Companion Flange Assembly Note)
9	Washer
10	Locknut (See 03–19–11 Locknut Assembly Note)

Output Shaft Assembly Note

1. Install the output shaft to the coupling unit and partially tighten the bolts.
2. Install the companion flange to the output shaft.
3. Secure the companion flange using the **SST**, and tighten the bolts.

Tightening torque
41.2—53.9 N·m {4.2—5.4 kgf·m, 30.4—39.7 ft·lbf}

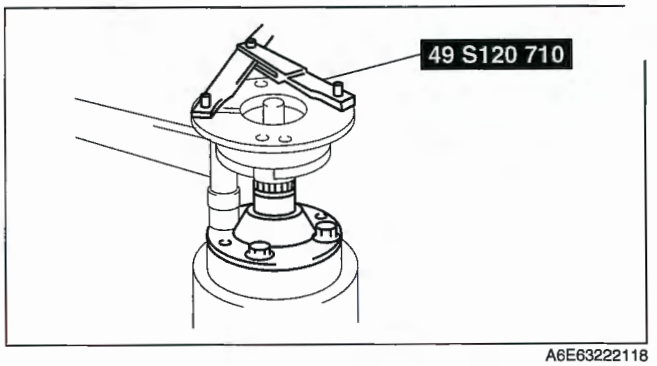

A6E63222118

Bearing Assembly Note

1. Assemble the bearing to the coupling case using the **SSTs**.

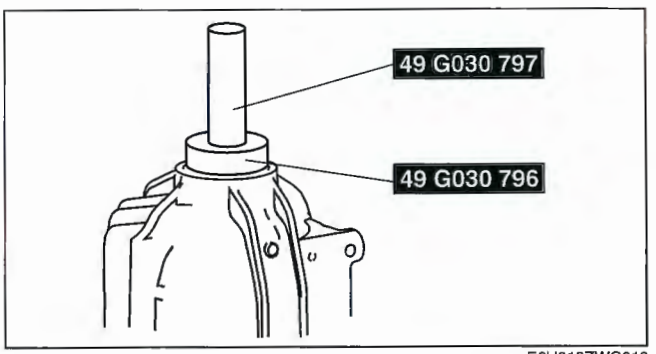

E6U318ZWC013

Coupling Case Assembly Note

Caution
- **The coupling unit will be damaged if it is pressed directly by a press. Always press the coupling unit into the coupling case using the SST.**

1. Assemble the coupling unit to the coupling case using the **SSTs** and a press.

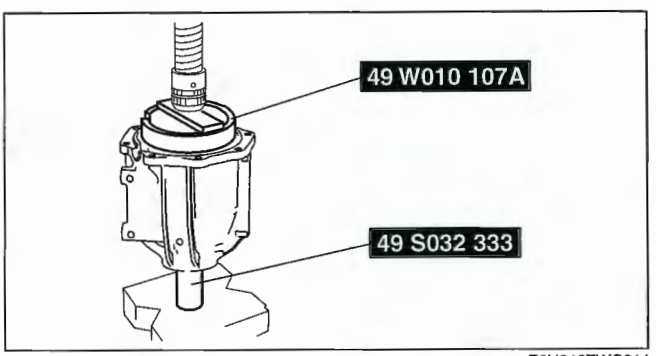

E6U318ZWC014

Oil Seal Assembly Note

1. Apply the specified oil to a new oil seal lip.
2. Install the oil seal to the coupling case using the **SST**.

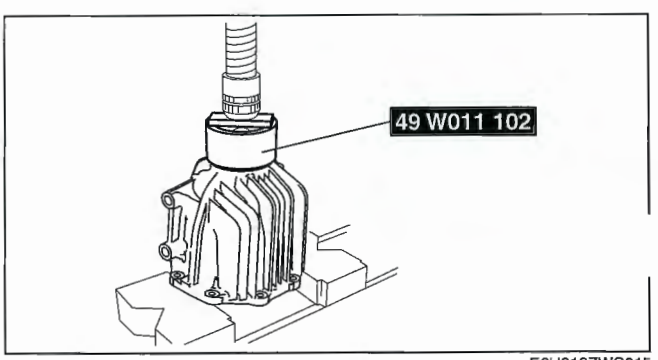

E6U318ZWC015

Companion Flange Assembly Note

1. Install the coupling case to the **SSTs** as shown.
2. Install the companion flange.

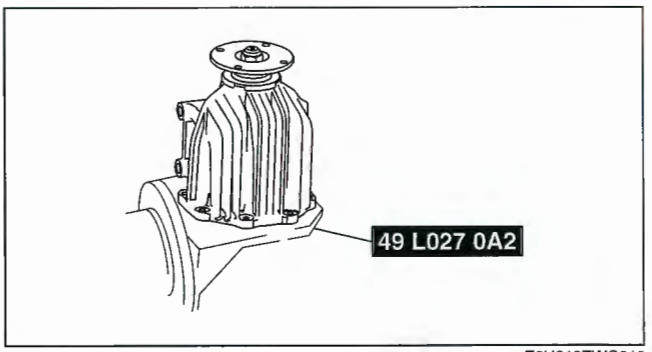

E6U318ZWC010

Locknut Assembly Note

1. Secure the companion flange using the **SST**, and tighten a new locknut.

   Tightening torque
   167—226 N·m {17.1—23.0 kgf·m, 124—166 ft·lbf}

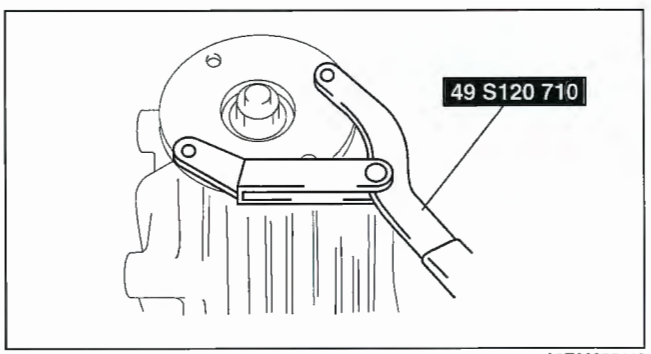

A6E63222119

03–50 TECHNICAL DATA

DRIVELINE/AXLE
ECHNICAL DATA 03–50–1

DRIVELINE/AXLE TECHNICAL DATA

E6U035000000W04

Item	Specification
Maximum front wheel bearing play	0.05 mm {0.002 in}
Maximum rear wheel bearing play	0.05 mm {0.002 in}
Front drive shaft length (ATX)	L3 (LH): 674.1—684.1 mm {26.54—26.93 in} L3 (RH): 630.4—640.4 mm {24.82—25.21 in} AJ (LH): 617.7—627.7 mm {24.32—24.71 in} AJ (RH): 597.4—607.4 mm {23.52—23.91 in}
Front Drive shaft length (MTX)	L3 (LH): 676.6—686.6 mm {26.64—27.03 in} L3 (RH): 628.6—638.6 mm {24.75—25.14 in} AJ (LH): 664.6—674.6 mm {26.17—26.55 in} AJ (RH): 595.9—605.9 mm {23.47—23.85 in} L3 with TC (LH): 640.4—650.4 mm {25.22—25.60 in} L3 with TC (RH): 584.1—594.1 mm {23.00—23.38 in}
Rear drive shaft standard length	LH: 804.2—814.2 mm {31.67—32.05 in} RH: 860.7—870.7 mm {33.89—34.27 in}
Rear differential oil type	Grade: API service GL-5 Viscosity: SAE 90, SAE 80W-90, SAE 75W-90 (Not available from Mazda)
Rear differential oil capacity (approximate quantity)	1.00 L {1.06 US qt, 0.88 Imp qt}
Rear differential pinion height	–0.032—0.032 mm {–0.0012—0.0012 in}
Rear differential drive pinion preload	1.3—1.8 N·m {13.3—18.2 kgf·cm, 11.5—15.9 in·lbf}
ear differential backlash of drive pinion and ring gear	Standard: 0.09—0.11 mm {0.003—0.004 in} Minimum value: 0.05 mm {0.002 in}
Maximum propeller shaft runout	0.3 mm {0.012 in}
Propeller shaft starting torque	Rear Differential side: 0.29—0.98 N·m {3.0—9.9 kgf·cm, 2.6—8.6 in·lbf} Others: 0.29—1.18 N·m {3.0—12.0 kgf·cm, 2.6—10.4 in·lbf}
Transfer oil	Specified oil grade: API Service GL-5 Specified oil viscosity: SAE 80W-90 Capacity (approximate quantity): 1.2 L {1.3 US qt, 1.1 Imp qt}

03–60 SERVICE TOOLS

FRONT AND REAR AXLE 03–60–1

FRONT AND REAR AXLE

E6U036000000W01

49 0259 770B Flare nut wrench 	49 T028 3A0 Ball joint puller set 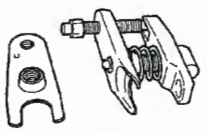	49 G033 102 Handle 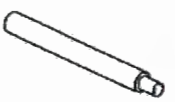
49 G033 105 Attachment 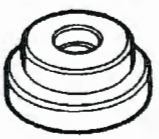	49 F026 103 Wheel hub puller 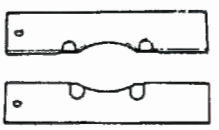	49 G033 106 Attachment 
49 S033 101 Dust cover installer 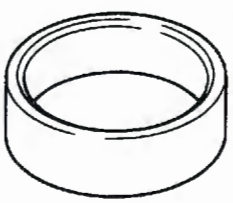	49 F027 009 Attachment ø68 & 77 	49 F027 003 Handle 
F027 004 Attachment ø80 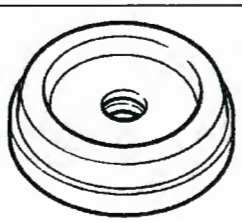	49 G026 105 Sensor rotor installer 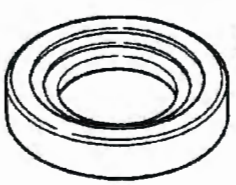	49 G030 455 Diff. side gear holder 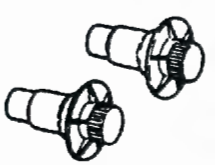
49 B025 006A Sensor rotor installer 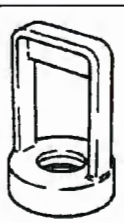	49 T025 001 Boot clamp crimpers 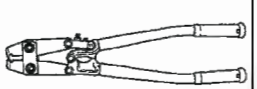	49 G030 370 Removing plate 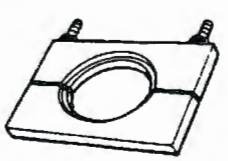
49 B014 001 Oil seal installer 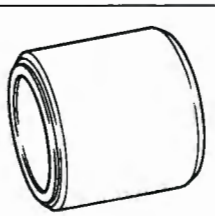	49 W034 301 Support block 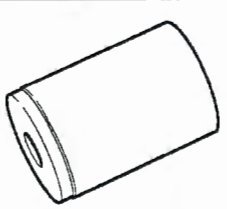	49 H027 002 Bearing remover 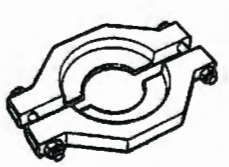
49 B025 004 Dust seal installer 	49 F027 005 Attachment ø62 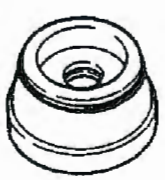	49 S231 626 Support block 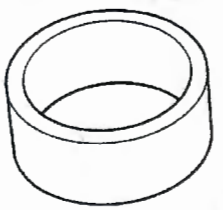

49 W027 003 Bearing installer 	49 G030 797 Handle 	49 H025 001 Bearing installer 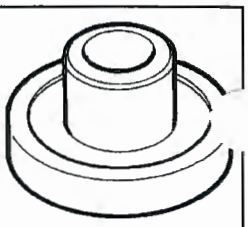
49 G026 103 Support block 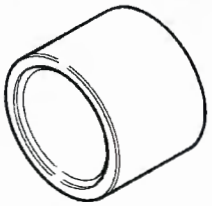	49 L025 002 Bearing installer 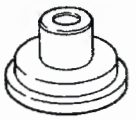	49 U027 003 Oil seal installer 
49 B018 003 Body B 	49 G033 107A Dust cover installer 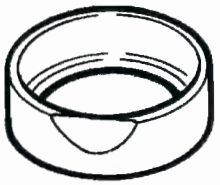	49 H026 104 Guide block 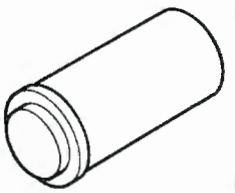
49 B025 009A Installer attachment 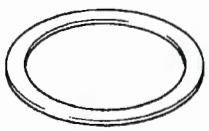	49 G030 796 Oil seal installer 	49 S120 710 Coupling flange holder 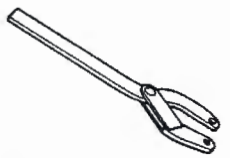
49 0839 425C Bearing puller set 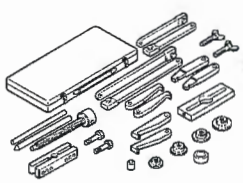	49 W011 102 Oil seal installer 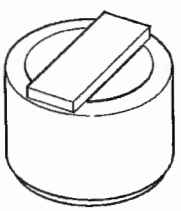	49 L027 0A2 Diff hanger set 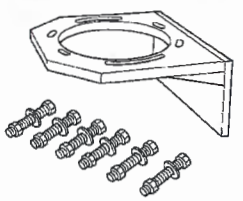
49 G028 201 Support block 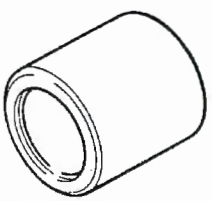	49 G030 338 Attachment E 	49 0107 680A Engine stand 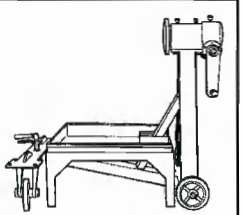
49 T032 317 Weight 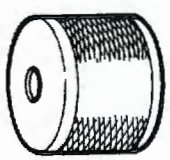	49 T032 316 Shaft 	49 L027 004 Gear case remover 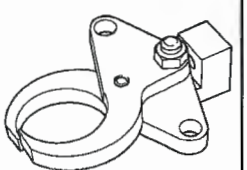
49 G027 004 Gauge block 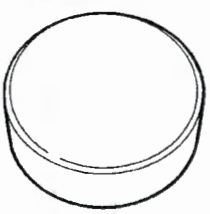	49 L027 006 Serrate socket 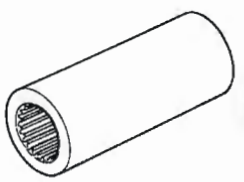	49 L027 007 Hex socket 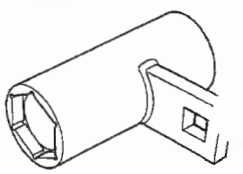

49 F401 331 Body 	49 M005 797 Oil seal installer 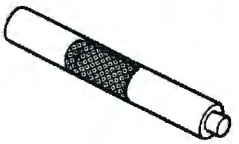	49 F027 007 Attachment ϕ 72 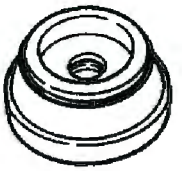
49 8531 565 Drive pinion model 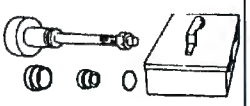	49 G032 347 Oil seal installer 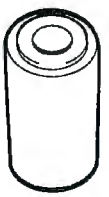	49 0727 570 Pinion height gauge body 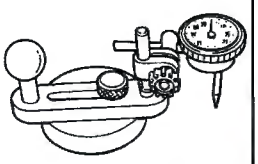
49 S033 108 Bearing installer 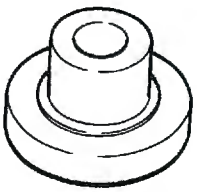	49 V001 525 Bearing installer 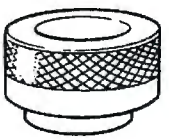	418-FS475 WDS 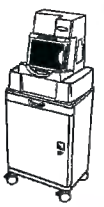
49 G027 005 Collar 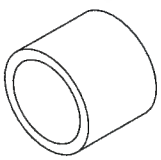	49 0305 555 Gauge block 	49 F401 331 Body 
F015 002 Water seal installer 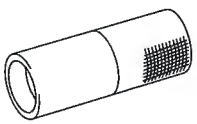	49 H033 101 Bearing remover 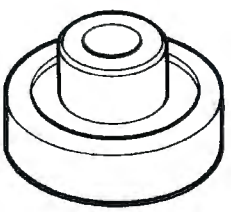	49 U027 005 Bearing installer 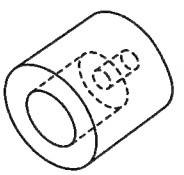
49 F401 335A Attachment A 	49 0636 145 Water Pump Pulley Boss Puller 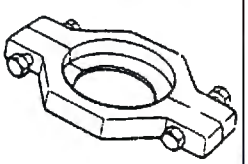	49 B034 201 Support block 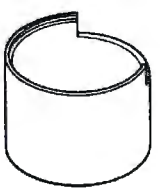
49 W010 107A Installer 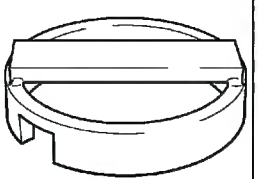	49 S032 333 Bearing installer 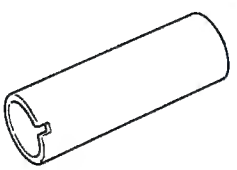	49 G026 102 Bearing replacer 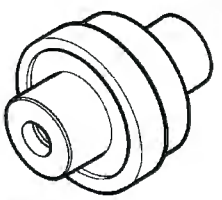
49 H027 001 Collar 	49 F026 102 Bearing Installer 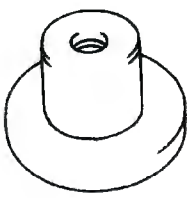	49 0500 330 Bearing installer 

BRAKES

04
SECTION

ON-BOARD DIAGNOSTIC [ABS/TCS] 04-02A
ON-BOARD DIAGNOSTIC [DYNAMIC STABILITY CONTROL] 04-02B
SYMPTOM TROUBLESHOOTING [ABS/TCS] 04-03A
SYMPTOM TROUBLESHOOTING [DYNAMIC STABILITY CONTROL] 04-03B
GENERAL PROCEDURES 04-10
CONVENTIONAL BRAKE SYSTEM 04-11
PARKING BRAKE SYSTEM 04-12
ANTILOCK BRAKE SYSTEM 04-13
TRACTION CONTROL SYSTEM 04-14
DYNAMIC STABILITY CONTROL 04-15
TECHNICAL DATA 04-50
SERVICE TOOLS 04-60

04–02A ON-BOARD DIAGNOSTIC [ABS/TCS]

ABS/TCS SYSTEM WIRING DIAGRAM 04–02A–2
ABS/TCS ON-BOARD DIAGNOSIS 04–02A–2
- On-Board Diagnostic (OBD) Test Description 04–02A–2
- Reading DTCs Procedure 04–02A–3
- Clearing DTCs Procedures 04–02A–3
- PID/Data Monitor and Record Procedure 04–02A–3
- Active Command Modes Procedure 04–02A–3
- DTC Table 04–02A–4
- PID/DATA Monitor Table 04–02A–5
- Active Command Modes Table 04–02A–7

DTC B1318 [ABS/TCS] 04–02A–8
DTC B1342 [ABS/TCS] 04–02A–9
DTC B2477 [ABS/TCS] 04–02A–9
DTC C1095, C1096 [ABS/TCS] 04–02A–10
DTC C1119 [ABS/TCS] 04–02A–12
DTC C1140 [ABS/TCS] 04–02A–13
DTC C1145, C1155, C1165, C1175 [ABS/TCS] 04–02A–14
DTC C1148, C1158, C1168, C1178, C1233, C1234, C1235, C1236 [ABS/TCS] 04–02A–16
DTC C1186, C1266 [ABS/TCS] 04–02A–18
DTC C1194, C1198, C1210, C1214, C1242, C1246, C1250, C1254 [ABS/TCS] 04–02A–19
DTC C1414 [ABS/TCS] 04–02A–20
DTC C1508 [ABS/TCS] 04–02A–20
DTC C1510, C1511, C1512, C1513 [ABS/TCS] 04–02A–21
DTC U2021[ABS/TCS] 04–02A–21

ABS/TCS SYSTEM WIRING DIAGRAM

E6U040200000W01

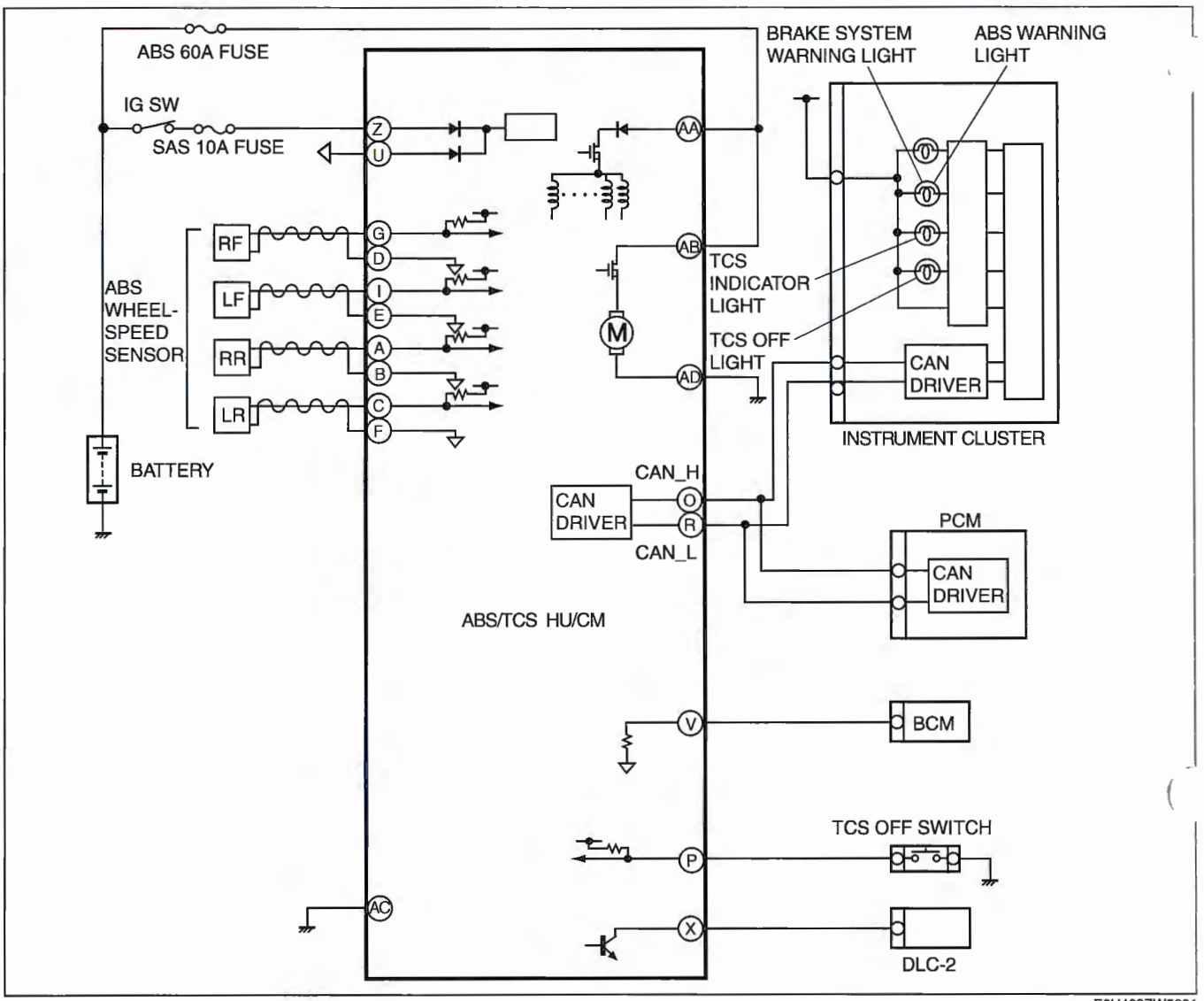

E6U402ZW5001

ABS/TCS ON-BOARD DIAGNOSIS

E6U040200000W02

On-Board Diagnostic (OBD) Test Description

- The OBD test inspects the integrity and function of the ABS/TCS and outputs the results when requested by the specific tests.
- On-board diagnostic test also:
  - — Provides a quick inspection of the ABS/TCS usually performed at the start of each diagnostic procedure.
  - — Provides verification after repairs to ensure that no other faults occurred during service.
- The OBD test is divided into 3 tests:
  - — Read/clear diagnostic results, PID monitor and record and active command modes.

Read/clear diagnostic results

- This function allows you to read or clear DTCs in the ABS/TCS HU/CM memory.

PID/Data monitor and record

- This function allows you to access certain data values, input signals, calculated values, and system status information.

Active command modes

- This function allows you to control devices through the WDS or equivalent.

Reading DTCs Procedure

1. Connect WDS or equivalent to the vehicle DLC-2 connector.
   Retrieve DTC using the WDS or equivalent.

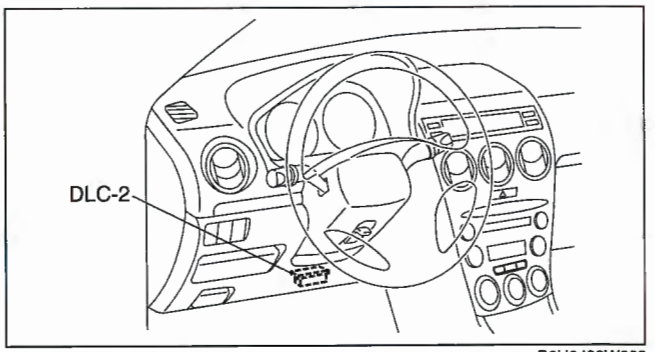

B6U0402W002

Clearing DTCs Procedures

1. After repairs have been made, perform the **DTCs reading procedure**.
2. Erase DTC using the WDS or equivalent.
3. Ensure that the customer's concern has been resolved.

PID/Data Monitor and Record Procedure

1. Connect WDS or equivalent to the vehicle DLC-2 connector.
2. Access and monitor PIDs using the WDS or equivalent.

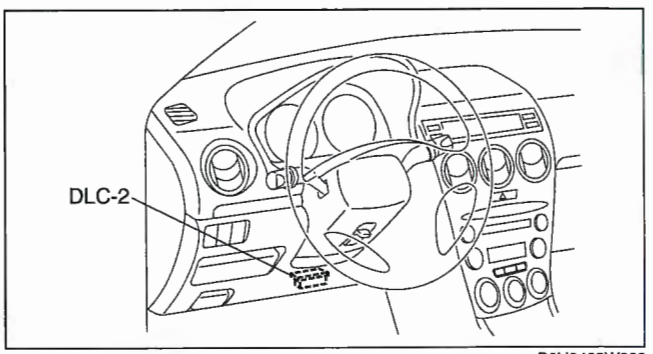

B6U0402W002

Active Command Modes Procedure

Note

- When driving, the ABS motor and each valve automatically turn ABS_POWER on, and then each command on. ABS_POWER regulates the power supply for the ABS motor and 8 valves.

1. Connect WDS or equivalent to the vehicle DLC-2 16-pin connector.
2. Turn the ignition key to ON (engine off) or start engine.
3. Activate active command modes using the WDS or equivalent.

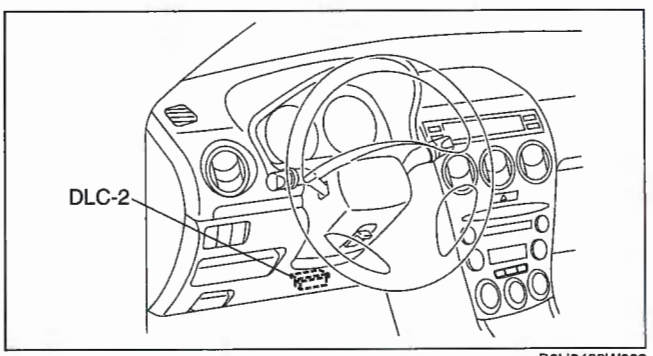

B6U0402W002

DTC Table

DTC WDS or equiva-lent	Diagnosis system component	Page
B1318	ABS/TCS power supply	(See 04–02A–8 DTC B1318 [ABS/TCS])
B1342	ABS/TCS HU/CM	(See 04–02A–9 DTC B1342 [ABS/TCS])
B2477	Module configuration	(See 04–02A–9 DTC B2477 [ABS/TCS])
C1095	Motor relay, pump motor	(See 04–02A–10 DTC C1095, C1096 [ABS/TCS])
C1096	Motor relay, pump motor	(See 04–02A–10 DTC C1095, C1096 [ABS/TCS])
C1119	Engine control system, torque reduction inhibit signal line	(See 04–02A–12 DTC C1119 [ABS/TCS])
C1140	ABS/TCS HU/CM (pump)	(See 04–02A–13 DTC C1140 [ABS/TCS])
C1145	Right front ABS wheel-speed sensor	(See 04–02A–14 DTC C1145, C1155, C1165, C1175 [ABS/TCS])
C1148	Right front ABS wheel-speed sensor/sensor rotor	(See 04–02A–16 DTC C1148, C1158, C1168, C1178, C1233, C1234, C1235, C1236 [ABS/TCS])
C1155	Left front ABS wheel-speed sensor	(See 04–02A–14 DTC C1145, C1155, C1165, C1175 [ABS/TCS])
C1158	Left front ABS wheel-speed sensor/sensor rotor	(See 04–02A–16 DTC C1148, C1158, C1168, C1178, C1233, C1234, C1235, C1236 [ABS/TCS])
C1165	Right rear ABS wheel-speed sensor	(See 04–02A–14 DTC C1145, C1155, C1165, C1175 [ABS/TCS])
C1168	Right rear ABS wheel-speed sensor/sensor rotor	(See 04–02A–16 DTC C1148, C1158, C1168, C1178, C1233, C1234, C1235, C1236 [ABS/TCS])
C1175	Left rear ABS wheel-speed sensor	(See 04–02A–14 DTC C1145, C1155, C1165, C1175 [ABS/TCS])
C1178	Left rear ABS wheel-speed sensor/sensor rotor	(See 04–02A–16 DTC C1148, C1158, C1168, C1178, C1233, C1234, C1235, C1236 [ABS/TCS])
C1186	Fail-safe relay	(See 04–02A–18 DTC C1186, C1266 [ABS/TCS
C1194	Left front pressure reduction solenoid valve	(See 04–02A–19 DTC C1194, C1198, C1210, C1214, C1242, C1246, C1250, C1254 [ABS/TCS])
C1198	Left front pressure retention solenoid valve	(See 04–02A–19 DTC C1194, C1198, C1210, C1214, C1242, C1246, C1250, C1254 [ABS/TCS])
C1210	Right front pressure reduction solenoid valve	(See 04–02A–19 DTC C1194, C1198, C1210, C1214, C1242, C1246, C1250, C1254 [ABS/TCS])
C1214	Right front pressure retention solenoid valve	(See 04–02A–19 DTC C1194, C1198, C1210, C1214, C1242, C1246, C1250, C1254 [ABS/TCS])
C1233	Left front ABS wheel-speed sensor/sensor rotor	(See 04–02A–16 DTC C1148, C1158, C1168, C1178, C1233, C1234, C1235, C1236 [ABS/TCS])
C1234	Right front ABS wheel-speed sensor/sensor rotor	(See 04–02A–16 DTC C1148, C1158, C1168, C1178, C1233, C1234, C1235, C1236 [ABS/TCS])
C1235	Right rear ABS wheel-speed sensor/sensor rotor	(See 04–02A–16 DTC C1148, C1158, C1168, C1178, C1233, C1234, C1235, C1236 [ABS/TCS])
C1236	Left rear ABS wheel-speed sensor/sensor rotor	(See 04–02A–16 DTC C1148, C1158, C1168, C1178, C1233, C1234, C1235, C1236 [ABS/TCS])
C1242	Left rear pressure reduction solenoid valve	(See 04–02A–19 DTC C1194, C1198, C1210, C1214, C1242, C1246, C1250, C1254 [ABS/TCS])
C1246	Right rear pressure reduction solenoid valve	(See 04–02A–19 DTC C1194, C1198, C1210, C1214, C1242, C1246, C1250, C1254 [ABS/TCS])
C1250	Left rear pressure retention solenoid valve	(See 04–02A–19 DTC C1194, C1198, C1210, C1214, C1242, C1246, C1250, C1254 [ABS/TCS])
C1254	Right rear pressure retention solenoid valve	(See 04–02A–19 DTC C1194, C1198, C1210, C1214, C1242, C1246, C1250, C1254 [ABS/TCS])
C1266	Fail-safe relay	(See 04–02A–18 DTC C1186, C1266 [ABS/TCS])
C1414	ABS/TCS HU/CM	(See 04–02A–20 DTC C1414 [ABS/TCS])
C1508	TCS control	(See 04–02A–20 DTC C1508 [ABS/TCS])

DTC WDS or equivalent	Diagnosis system component	Page
C1510	Right front solenoid valve, motor or ABS wheel-speed sensor/sensor rotor	(See 04–02A–21 DTC C1510, C1511, C1512, C1513 [ABS/TCS])
C1511	Left front solenoid valve, motor or ABS wheel-speed sensor/sensor rotor	(See 04–02A–21 DTC C1510, C1511, C1512, C1513 [ABS/TCS])
C1512	Right rear solenoid valve, motor or ABS wheel-speed sensor/sensor rotor	(See 04–02A–21 DTC C1510, C1511, C1512, C1513 [ABS/TCS])
C1513	Left rear solenoid valve, motor or ABS wheel-speed sensor/sensor rotor	(See 04–02A–21 DTC C1510, C1511, C1512, C1513 [ABS/TCS])
U0073	CAN system communication error	(See 09–02A–4 DTC TABLE [MULTIPLEX COMMUNICATION SYSTEM (L3, AJ)])
U0100	Communication error to PCM	(See 09–02A–4 DTC TABLE [MULTIPLEX COMMUNICATION SYSTEM (L3, AJ)])
U0101	Communication error to TCM	(See 09–02A–4 DTC TABLE [MULTIPLEX COMMUNICATION SYSTEM (L3, AJ)])
U0155	Communication error to instrument cluster	(See 09–02A–4 DTC TABLE [MULTIPLEX COMMUNICATION SYSTEM (L3, AJ)])
U2021	Engine coolant temperature	(See 04–02A–21 DTC U2021[ABS/TCS])

PID/DATA Monitor Table

PID Name (Definition)	Unit/Condition	Condition/Specification	Action	ABS/TCS HU/CM terminal
RPM (Engine speed signal input)	RPM	• Engine is stopped: **0 RPM** • Engine is running: Indicates engine speed	Inspect PCM. (See 01–40A–9 PCM INSPECTION [L3].) (See 01–40C–6 PCM INSPECTION [AJ].)	—
CNTABS (Number of continuous codes)	—	• DTC is detected: **1—255** • DTC is not detected: **0**	Perform inspection using appropriate DTC.	—
PMPSTAT (Pump motor output state)	On/Off	• Pump motor is activated: On • Pump motor is deactivated: Off	Inspect ABS/TCS HU/CM. (See 04–13–3 ABS/TCS HU/CM SYSTEM INSPECTION.)	—
BOO_ABS (Brake pedal switch input)	On/Off	• Brake pedal is depressed: On • Brake pedal is released: Off	Inspect brake switch.	—
ABS_LAMP (ABS warning light driver output state)	On/Off	• ABS warning light is illuminated: On • ABS warning light is not illuminated: Off	Inspect ABS warning light.	—
BRAKE_LMP (BRAKE system warning light output state)	On/Off	• BRAKE system warning light is illuminated: On • BRAKE system warning light is not illuminated: Off	Inspect BRAKE system warning light.	—
ABSRR_O (Right rear ABS pressure reduction solenoid valve output state)	On/Off	• During ABS or EBD control: On/Off (solenoid valve is activated/deactivated) • No ABS and EBD control: Off (solenoid valve is deactivated)	Internal fault of ABS/TCS HU/CM. Replace ABS/TCS HU/CM. (See 04–13–4 ABS/TCS HU/CM REMOVAL/ INSTALLATION.)	—

PID Name (Definition)	Unit/Condition	Condition/Specification	Action	ABS/TCS HU/CM terminal
ABSLR_O (Left rear ABS pressure reduction solenoid valve output state)	On/Off	• During ABS or EBD control: On/Off (solenoid valve is activated/deactivated) • No ABS and EBD control: Off (solenoid valve is deactivated)	Internal fault of ABS/TCS HU/CM. Replace ABS/TCS HU/CM. (See 04–13–4 ABS/TCS HU/CM REMOVAL/ INSTALLATION.)	—
ABSRF_O (Right front ABS pressure reduction solenoid valve output state)	On/Off	• During ABS control: On/Off (solenoid valve is activated/deactivated) • No ABS control: Off (solenoid valve is deactivated)	Internal fault of ABS/TCS HU/CM. Replace ABS/TCS HU/CM. (See 04–13–4 ABS/TCS HU/CM REMOVAL/ INSTALLATION.)	—
ABSLF_O (Left front ABS pressure reduction solenoid valve output state)	On/Off	• During ABS control: On/Off (solenoid valve is activated/deactivated) • No ABS control: Off (solenoid valve is deactivated)	Internal fault of ABS/TCS HU/CM. Replace ABS/TCS HU/CM. (See 04–13–4 ABS/TCS HU/CM REMOVAL/ INSTALLATION.)	—
ABSRR_I (Right rear ABS pressure retention solenoid valve output state)	On/Off	• During ABS or EBD control: On/Off (solenoid valve is activated/deactivated) • No ABS and EBD control: Off (solenoid valve is deactivated)	Internal fault of ABS/TCS HU/CM. Replace ABS/TCS HU/CM. (See 04–13–4 ABS/TCS HU/CM REMOVAL/ INSTALLATION.)	—
ABSLR_I (Left rear ABS pressure retention solenoid valve output state)	On/Off	• During ABS or EBD control: On/Off (solenoid valve is activated/deactivated) • No ABS and EBD control: Off (solenoid valve is deactivated)	Internal fault of ABS/TCS HU/CM. Replace ABS/TCS HU/CM. (See 04–13–4 ABS/TCS HU/CM REMOVAL/ INSTALLATION.)	—
ABSRF_I (Right front ABS pressure retention solenoid valve output state)	On/Off	• During ABS control: On/Off (solenoid valve is activated/deactivated) • No ABS control: Off (solenoid valve is deactivated)	Internal fault of ABS/TCS HU/CM. Replace ABS/TCS HU/CM. (See 04–13–4 ABS/TCS HU/CM REMOVAL/ INSTALLATION.)	—
ABSLF_I (Left front ABS pressure retention solenoid valve output state)	On/Off	• During ABS control: On/Off (solenoid valve is activated/deactivated) • No ABS control: Off (solenoid valve is deactivated)	Internal fault of ABS/TCS HU/CM. Replace ABS/TCS HU/CM. (See 04–13–4 ABS/TCS HU/CM REMOVAL/ INSTALLATION.)	—
ABSVLVRLY (Fail-safe relay output state)	On/Off	• Fail-safe relay is activated: On • Fail-safe relay is deactivated: Off	Inspect ABS/TCS HU/CM. (See 04–13–6 ABS/TCS HU/CM INSPECTION)	—
ABSPMPRLY (Motor relay output state)	On/Off	• Motor relay is activated: On • Motor relay is deactivated: Off	Inspect ABS/TCS HU/CM. (See 04–13–6 ABS/TCS HU/CM INSPECTION)	—
LF_WSPD (Left front ABS wheel-speed sensor input)	KPH, MPH	• Vehicle is stopped: **0 KPH {0 MPH}** • Vehicle is driving: Indicates vehicle speed	Inspect ABS wheel-speed sensor/sensor rotor.	I, E
RF_WSPD (Right front ABS wheel-speed sensor input)	KPH, MPH	• Vehicle is stopped: **0 KPH {0 MPH}** • Vehicle is driving: Indicates vehicle speed	Inspect ABS wheel-speed sensor/sensor rotor.	G, D

PID Name (Definition)	Unit/Condition	Condition/Specification	Action	ABS/TCS HU/CM terminal
R_WSPD (Left rear ABS wheel-speed sensor input)	KPH, MPH	• Vehicle is stopped: **0 KPH {0 MPH}** • Vehicle is driving: Indicates vehicle speed	Inspect ABS wheel-speed sensor/sensor rotor.	C, F
RR_WSPD (Right rear ABS wheel-speed sensor input)	KPH, MPH	• Vehicle is stopped: **0 KPH {0 MPH}** • Vehicle is driving: Indicates vehicle speed	Inspect ABS wheel-speed sensor/sensor rotor.	A, B
ABS_VOLT (System battery voltage value)	V	• Ignition key at ON: **B+** • Idle: **Approx. 14—16 V**	Inspect power supply circuit. (See 04–13–6 ABS/TCS HU/CM INSPECTION.)	Z
PCM_MSG (Missing message from the PCM)	Present/ Not Present	• Present: Circuit in the PCM is normal. • Not Present: Circuit in the PCM is abnormal.	Inspect PCM. (See 01–40A–9 PCM INSPECTION [L3].) (See 01–40C–6 PCM INSPECTION [AJ].) Inspect ABS/TCS HU/CM. (See 04–13–6 ABS/TCS HU/CM INSPECTION.)	—
TCM_MSG (Missing message from the TCM)	Present/ Not Present	• Present: Circuit in the TCM is normal. • Not Present: Circuit in the TCM is abnormal.	Inspect TCM. (See 05–17A–33 TCM INSPECTION [FS5A-EL]) (See 05–17B–21 TCM INSPECTION [AW6A-EL]) Inspect ABS/TCS HU/CM. (See 04–13–6 ABS/TCS HU/CM INSPECTION)	—

Active Command Modes Table

Command Name	Definition	Operation	Note
BS_POWER	Fail-safe relay	On/Off	Ignition key at ON (Engine running, vehicle is not moving)
LR_OUTLET	Left rear ABS pressure reduction solenoid valve	On/Off	
LR_INLET	Left rear ABS pressure retention solenoid valve	On/Off	
RR_INLET	Right rear ABS pressure retention solenoid valve	On/Off	
RR_OUTLET	Right rear ABS pressure reduction solenoid valve	On/Off	
LF_INLET	Left front ABS pressure retention solenoid valve	On/Off	
LF_OUTLET	Left front ABS pressure reduction solenoid valve	On/Off	
RF_INLET	Right front ABS pressure retention solenoid valve	On/Off	
RF_OUTLET	Right front ABS pressure reduction solenoid valve	On/Off	

DTC B1318 [ABS/TCS]

E6U040200000W03

DTC B1318	ABS/TCS power supply
DETECTION CONDITION	• Low voltage is detected at the voltage monitor of solenoid valve monitor, or the motor monitor
POSSIBLE CAUSE	• Malfunction of fuse (SAS 10 A) • Open circuit or short to power supply in harness between ABS/TCS HU/CM terminal Z and battery positive terminal • Open circuit in harness between body ground and ABS/TCS HU/CM terminal AC • Battery and/or generator malfunction

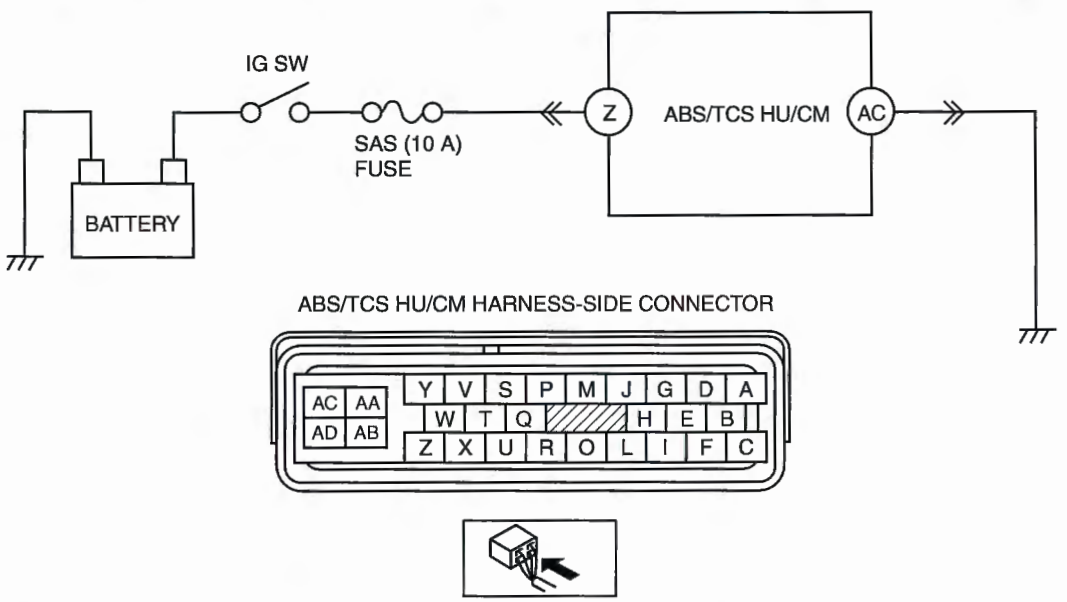

Diagnostic procedure

STEP	INSPECTION		ACTION
1	**INSPECT BATTERY VOLTAGE** • Is battery terminal voltage normal?	Yes	Make sure that battery terminal connection is normal. Go to the next step.
		No	Charge or replace battery, then go to Step 6.
2	**INSPECT BATTERY GRAVITY** • Is battery specific gravity as specified?	Yes	Go to the next step.
		No	Replace battery, then go to Step 6.
3	**INSPECT CHARGING SYSTEM** • Are generator and drive belt tensions normal?	Yes	Go to the next step.
		No	Adjust drive belt tension as necessary. Replace generator and/or drive belt as necessary.
4	**INSPECT ABS/TCS HU/CM POWER SUPPLY CIRCUIT FOR OPEN CIRCUIT** • Start engine. • Measure voltage between ABS/TCS HU/CM terminal Z and ground. • Is voltage **above 10 V**?	Yes	Go to the next step.
		No	Go to Step 6.
5	**INSPECT ABS/TCS HU/CM GROUND CIRCUIT FOR POOR GROUND OR OPEN CIRCUIT** • Turn the ignition switch off. • Measure resistance between ground and ABS/TCS HU/CM terminal AC. • Is resistance **within 0—1 ohm**?	Yes	Go to the next step.
		No	If there is no continuity: • Repair or replace harness for open circuit between ABS/TCS HU/CM and ground, then go to the next step. If resistance is not **within 0—1 ohm**: • Repair or replace harness for poor ground then go to the next step.
6	**VERIFY TROUBLESHOOTING COMPLETED** • Make sure to reconnect all disconnected connectors. • Clear the DTC from the memory. (See 04–02A–3 Clearing DTCs Procedures.) • Is same DTC present?	Yes	Replace ABS/TCS HU/CM, then go to the next step.
		No	Go to the next step.
7	**VERIFY AFTER REPAIR PROCEDURE** • Is there any other DTC present?	Yes	Go to the applicable DTC inspection. (See 04–02A–4 DTC Table.)
		No	Troubleshooting completed.

DTC B1342 [ABS/TCS]

E6U040200000W04

DTC B1342	ABS/TCS HU/CM
DETECTION CONDITION	The on-board diagnostic function detects control module malfunction.
POSSIBLE CAUSE	• Malfunction of ABS/TCS HU/CM

Diagnostic procedure

STEP	INSPECTION		ACTION
1	**VERIFY CURRENT STATUS OF MALFUNCTION** • Clear the DTC from the memory. (See 04–02A–3 Clearing DTCs Procedures.) • Start engine and drive vehicle at **10 km/h {6.2 mph}** or above. • Is same DTC present?	Yes	Replace ABS/TCS HU/CM, then go to the next step.
		No	Inspect intermittent concern using the same procedure as engine control system.
2	**VERIFY AFTER REPAIR PROCEDURE** • Is there any other DTC present?	Yes	Go to the applicable DTC inspection. (See 04–02A–4 DTC Table.)
		No	Troubleshooting completed.

DTC B2477 [ABS/TCS]

E6U040200000W05

DTC B2477	Module configuration
DETECTION CONDITION	• Configuration write failure is detected
POSSIBLE CAUSE	• Module configuration procedure is not done properly.

ıgnostic procedure

TEP	INSPECTION		ACTION
1	**CHECK WHETHER ABS/TCS HU/CM IS CONFIGURED** • Is ABS/TCS HU/CM configured?	Yes	Go to the next step.
		No	Configurate ABS/TCS using the WDS or equivalent. (See 04–13–6 ABS/TCS HU/CM CONFIGURATION)
2	**VERIFY TROUBLESHOOTING COMPLETED** • Clear the DTC from the memory. (See 04–02A–3 Clearing DTCs Procedures) • Is same DTC present?	Yes	Replace ABS/TCS HU/CM, then go to the next step.
		No	Go to the next step.
3	**VERIFY AFTER REPAIR PROCEDURE** • Is there any other DTC present?	Yes	Go to the applicable DTC inspection.
		No	Troubleshooting completed.

DTC C1095, C1096 [ABS/TCS]

E6U040200000W06

DTC C1095, C1096	Motor relay, pump motor
DETECTION CONDITION	• C1095: — ABS motor stuck OFF when vehicle is started or during ABS/TCS operation, ABS motor ON is commanded. • C1096: — ABS motor stuck OFF when vehicle is started or during ABS/TCS operation, ABS motor ON is commanded. — Motor monitor ON signal is not input after specified time when the motor signal is switched from ON to OFF by ABS/TCS HU/CM.
POSSIBLE CAUSE	• Open circuit, or short to power supply or short to ground of motor relay and/or ABS motor in ABS/TCS HU/CM • Stuck motor relay and/or ABS motor • Open circuit of ABS motor power supply • Open circuit of ABS motor ground

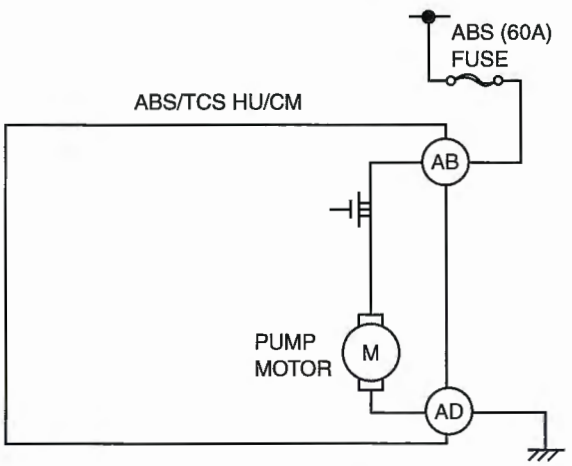

ABS/TCS HU/CM HARNESS-SIDE CONNECTOR

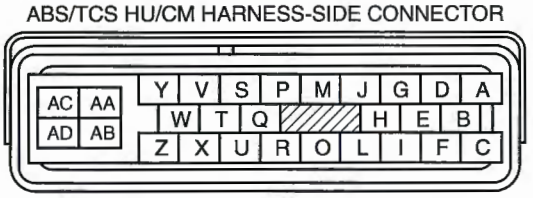

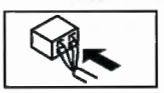

Diagnostic procedure

STEP	INSPECTION		ACTION
1	**VERIFY OTHER DTC HAS BEEN RECORDED** • Has DTC C1186 and/or C1266 also been stored?	Yes	Go to the applicable DTC inspection.
		No	Go to the next step.
2	**INSPECT ABS FUSE CONDITION** • Is ABS fuse (60 A) normal?	Yes	Go to the next step.
		No	Replace fuse, then go to Step 6.
3	**INSPECT MOTOR RELAY POWER SUPPLY CIRCUIT FOR OPEN CIRCUIT** • Turn the ignition switch off. • Disconnect ABS/TCS HU/CM connector. • Turn the ignition switch to the ON position (engine off). • Measure voltage between ABS/TCS HU/CM terminal AB (harness-side) and ground. • Is voltage **B+**?	Yes	Go to the next step.
		No	Repair or replace harness for open circuit between battery positive terminal and ABS/TCS HU/CM terminal AC, then go to Step 6.
4	**INSPECT PUMP MOTOR GROUND CIRCUIT FOR OPEN CIRCUIT** • Turn the ignition switch off. • Inspect continuity between ABS/TCS HU/CM terminal AD (harness-side) and ground. • Is there continuity?	Yes	Go to the next step.
		No	Repair or replace harness for open circuit between ABS/TCS HU/CM terminal AB and ground, then go to Step 6.
5	**VERIFY PUMP MOTOR OPERATION** • Turn the ignition switch off. • Connect WDS or equivalent to DLC-2. • Turn the ignition switch to the ON position (engine off). • Access ABS_POWER and PMP_MOTOR active command modes using the WDS or equivalent. • Does pump motor operate?	Yes	Go to the next step.
		No	Repair ABS/TCS HU/CM, then go to the next step.
6	**VERIFY TROUBLESHOOTING COMPLETED** • Clear the DTC from the memory. (See 04–02A–3 Clearing DTCs Procedures.) • Start engine and drive vehicle at **10 km/h {6.2 mph}** or above. • Gradually slow down and stop vehicle. • Is same DTC present?	Yes	Replace ABS/TCS HU/CM, then go to the next step.
		No	Go to the next step.
7	**VERIFY AFTER REPAIR PROCEDURE** • Is there any other DTC present?	Yes	Go to the applicable DTC inspection. (See 04–02A–4 DTC Table.)
		No	Troubleshooting completed.

DTC C1119 [ABS/TCS]

E6U040200000W07

DTC C1119	Engine control system, torque reduction inhibit signal line
DETECTION CONDITION	• Engine RPM information through CAN is out of specification or invalid value. • Throttle information through CAN is out of specification or invalid value. • Received control prohibition signal from PCM through CAN.
POSSIBLE CAUSE	• Malfunction of PCM

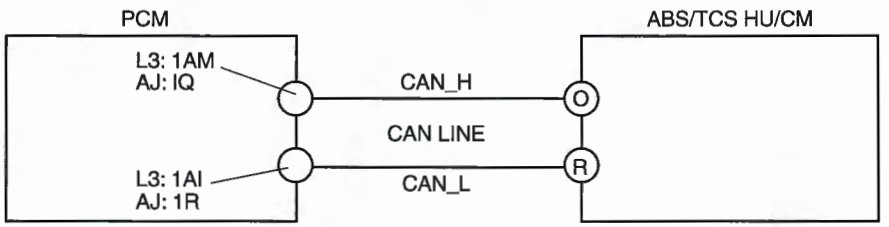

ABS/TCS HU/CM HARNESS-SIDE CONNECTOR

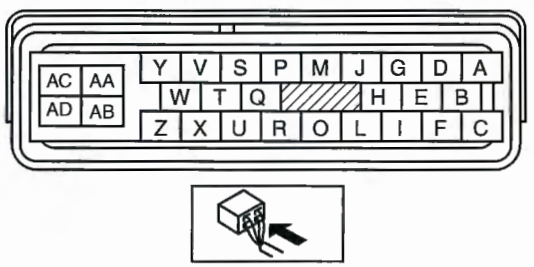

PCM HARNESS-SIDE CONNECTOR

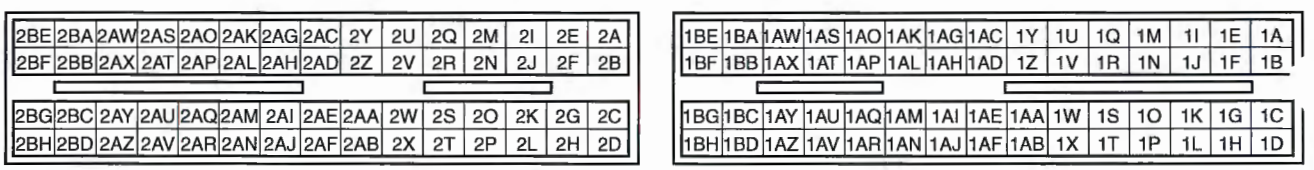

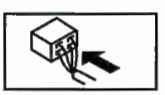

Diagnostic procedure

STEP	INSPECTION		ACTION
1	**INSPECT FOR PCM FOR DTCs** • Turn the ignition switch off. • Connect WDS or equivalent to DLC-2 • Turn ignition key to ON (engine off). • Is DTC for engine control system obtained?	Yes	Follow inspection procedures for engine control system.
		No	Go to the next step.
2	**VERIFY TROUBLESHOOTING COMPLETED** • Make sure to reconnect all disconnected connectors. • Clear the DTC from the memory. (See 04–02A–3 Clearing DTCs Procedures • Start engine.) • Is same DTC present?	Yes	Replace ABS/TCS HU/CM, then go to the next step.
		No	Go to the next step.
3	**VERIFY AFTER REPAIR PROCEDURE** • Is there any other DTC present?	Yes	Go to the applicable DTC inspection.
		No	Troubleshooting completed.

DTC C1140 [ABS/TCS]

E6U040200000W08

DTC C1140	ABS/TCS HU/CM (pump)
DETECTION CONDITION	Right front and left rear wheels, or left front and right rear wheel-lock is detected during ABS/TCS operation.
POSSIBLE CAUSE	Stuck pump motor in ABS/TCS HU/CM

Diagnostic procedure

STEP	INSPECTION		ACTION
1	**INSPECT ABS/TCS HU/CM OPERATION** • Perform ABS/TCS HU/CM system inspection. (See 04–13–3 ABS/TCS HU/CM SYSTEM INSPECTION) • Is it normal?	Yes	Go to the next step.
		No	Replace ABS/TCS HU/CM, then go to Step 4.
2	**INSPECT CONVENTIONAL BRAKE OPERATION** • Inspect brake fluid level. • Start engine. • Perform a road test to verify conventional vehicle braking performance. • Is there any concern.	Yes	Inspect conventional brake line, then go to Step 4.
		No	Go to the next step.
3	**INSPECT REAR BRAKE DRAGGING** • Turn the ignition switch off. • Jack-up vehicle and support it with safety stand. • Release parking brake. • Turn rear wheel by hand and inspect for rear brake drag. • Is rear brake dragging?	Yes	Repair parking brake system, then go to the next step.
		No	Go to the next step.
4	**VERIFY TROUBLESHOOTING COMPLETED** • Clear the DTC from the memory. (See 04–02A–3 Clearing DTCs Procedures) • Start engine and drive vehicle at **10 km/h {6.2 mph}** or above at least one minute. • Gradually slow down vehicle and stop. • Is same DTC present?	Yes	Replace ABS/TCS HU/CM, then go to the next step.
		No	Go to the next step.
5	**VERIFY AFTER REPAIR PROCEDURE** • Is there any other DTC present?	Yes	Go to the applicable DTC inspection.
		No	Troubleshooting completed.

DTC C1145, C1155, C1165, C1175 [ABS/TCS]

E6U040200000W09

DTC	C1145 C1155 C1165 C1175	RF ABS wheel-speed sensor LF ABS wheel-speed sensor RR ABS wheel-speed sensor LR ABS wheel-speed sensor
DETECTION CONDITION	• Abnormal input is detected.	
POSSIBLE CAUSE	• Open circuit or short to ground in harness between ABS/TCS HU/CM terminal and ABS wheel-speed sensor (s) terminals indicated below: — ABS/TCS HU/CM terminal G—RF ABS wheel-speed sensor terminal A — ABS/TCS HU/CM terminal D—RF ABS wheel-speed sensor terminal B — ABS/TCS HU/CM terminal I—LF ABS wheel-speed sensor terminal A — ABS/TCS HU/CM terminal E—LF ABS wheel-speed sensor terminal B — ABS/TCS HU/CM terminal A—RR ABS wheel-speed sensor terminal A — ABS/TCS HU/CM terminal B—RR ABS wheel-speed sensor terminal B — ABS/TCS HU/CM terminal C—LR ABS wheel-speed sensor terminal A — ABS/TCS HU/CM terminal F—LR ABS wheel-speed sensor terminal B • ABS wheel-speed sensor (s) malfunction	

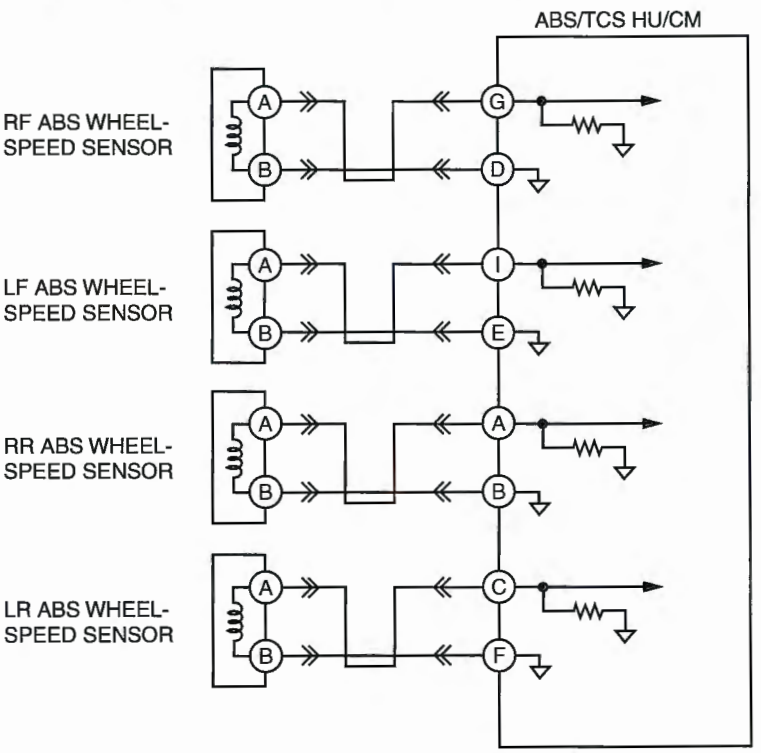

ABS WHEEL-SPEED SENSOR HARNESS-SIDE CONNECTOR

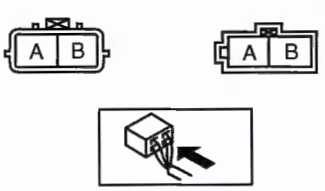

ABS/TCS HU/CM HARNESS-SIDE CONNECTOR

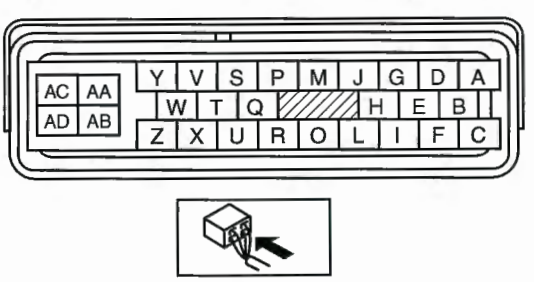

Diagnostic procedure

STEP	INSPECTION		ACTION
1	**INSPECT ABS WHEEL-SPEED SENSOR CIRCUIT FOR OPEN CIRCUIT** • Turn the ignition switch off. • Disconnect ABS/TCS HU/CM connector. • Measure resistance between suspected sensor terminals of ABS/TCS HU/CM connector (harness-side). — RF ABS wheel-speed sensor: G—D — LF ABS wheel-speed sensor: I—E — RR ABS wheel-speed sensor: A—B — LR ABS wheel-speed sensor: C—F • Is resistance **within 1.3—1.7 kilohm**?	Yes	Go to the next step.
		No	Go to Step 3.
2	**INSPECT ABS WHEEL-SPEED SENSOR CIRCUIT FOR SHORT TO GROUND** • Turn the ignition switch off. • Inspect continuity between suspected sensor terminal (s) of ABS/TCS HU/CM connector (harness-side) and ground (s). — RF ABS wheel-speed sensor (+): G — RF ABS wheel-speed sensor (–): D — LF ABS wheel-speed sensor (+): I — LF ABS wheel-speed sensor (–): E — RR ABS wheel-speed sensor (+): A — RR ABS wheel-speed sensor (–): B — LR ABS wheel-speed sensor (+): C — LR ABS wheel-speed sensor (–): F • Is there continuity?	Yes	Repair or replace harness for short to ground circuit between ABS/TCS HU/CM and ABS wheel-speed sensor (s), then go to Step 5.
		No	Go to Step 5.
3	**INSPECT ABS WHEEL-SPEED SENSOR** • Turn the ignition switch off. • Disconnect suspected sensor connector (s) and inspect resistance between sensor terminals (part side). • Is resistance **within 1.3—1.7 kilohm**?	Yes	Go to the next step.
		No	Replace ABS wheel-speed sensor, then go to Step 5.
4	**INSPECT ABS/TCS HU/CM TO ABS WHEEL-SPEED SENSOR CIRCUIT FOR OPEN CIRCUIT** • Inspect continuity between suspected sensor terminal (s) of ABS/TCS HU/CM connector (harness-side) and ABS wheel-speed sensor connector. (vehicle harness-side) — RF ABS wheel-speed sensor (+): G—A — RF ABS wheel-speed sensor (–): D—B — LF ABS wheel-speed sensor (+): I—A — LF ABS wheel-speed sensor (–): E—B — RR ABS wheel-speed sensor (+): A—A — RR ABS wheel-speed sensor (–): B—B — LR ABS wheel-speed sensor (+): C—A — LR ABS wheel-speed sensor (–): F—B • Is there continuity?	Yes	Repair or replace poor connections of ABS/TCS HU/CM connector and/or ABS wheel-speed sensor connector (s), then go to the next step.
		No	Repair or replace harness for open circuits between ABS/TCS HU/CM and ABS wheel-speed sensor (s), then go to the next step.
5	**VERIFY TROUBLESHOOTING COMPLETED** • Make sure to reconnect all disconnected connectors. • Clear the DTC from the memory (See 04–02A–3 Clearing DTCs Procedures.) • Is same DTC present?	Yes	Replace ABS/TCS HU/CM, then go to the next step.
		No	Go to the next step.
6	**VERIFY AFTER REPAIR PROCEDURE** • Is there any other DTC present?	Yes	Go to the applicable DTC inspection. (See 04–02A–4 DTC Table.)
		No	Troubleshooting completed.

DTC C1148, C1158, C1168, C1178, C1233, C1234, C1235, C1236 [ABS/TCS]

E6U040200000W10

DTC	C1148, C1234 C1158, C1233 C1168, C1235 C1178, C1236	**RF ABS wheel-speed sensor/sensor rotor** **LF ABS wheel-speed sensor/sensor rotor** **RR ABS wheel-speed sensor/sensor rotor** **LR ABS wheel-speed sensor/sensor rotor**
DETECTION CONDITION	• C1148, C1158, C1168, C1178: — Abnormal sensor output is detected on any of four vehicle wheels when the vehicle goes from start to a speed of **10 km/h {6.2 mph}** — Greater than specified amount of ABS demand occurs from front ABS wheel sensors when vehicle is started • C1234, C1233, C1235, C1236: — Abnormal sensor output due to chipping of sensor rotor teeth, etc. is detected — ABS control operates for **60 s or more**	
POSSIBLE CAUSE	• Short to ground circuit of ABS wheel-speed sensor (s) circuit • Malfunction of ABS wheel-speed sensor (s) • Damaged sensor rotor (s) • Incorrect clearance between ABS wheel-speed sensor and sensor rotor • Poor installation of ABS wheel speed sensor and/or sensor rotor (If the sensor rotor is installed twisted, it may cause output of abnormal wave form at high speeds) • ABS/TCS HU/CM internal damage (Solenoid valve malfunction, pump motor malfunction, or pipe clogging)	

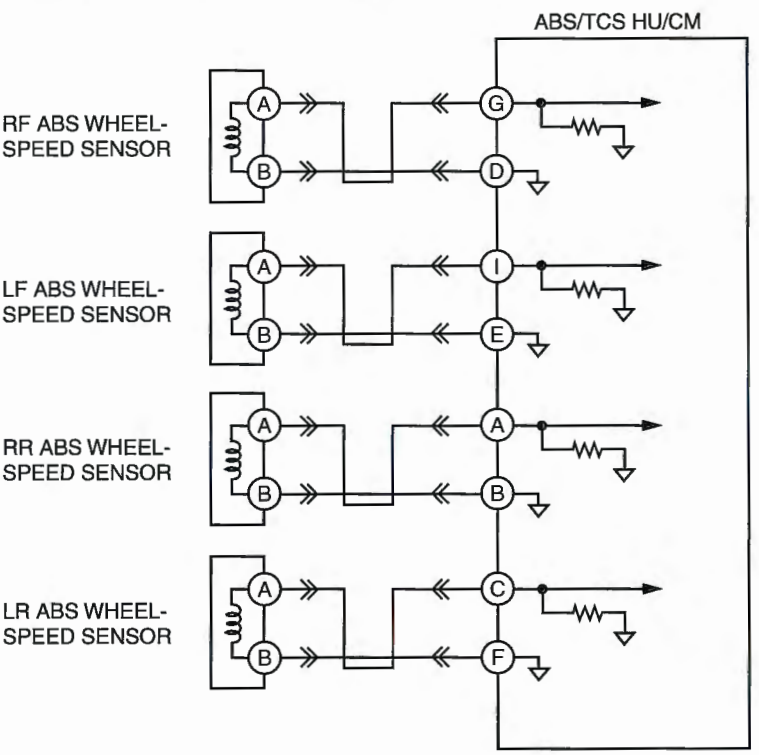

ABS WHEEL-SPEED SENSOR HARNESS-SIDE CONNECTOR

FRONT REAR

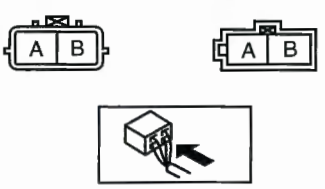

ABS/TCS HU/CM HARNESS-SIDE CONNECTOR

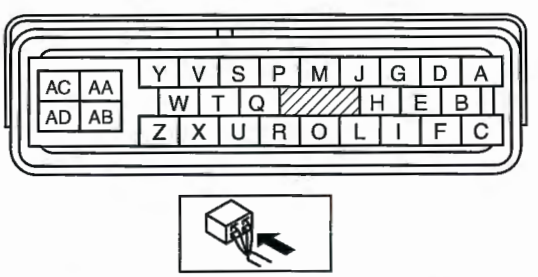

Diagnostic procedure

STEP	INSPECTION		ACTION
1	**VERIFY OTHER DTC HAS BEEN RECORDED** • Have DTCs related to solenoid valve, pump motor, or pump motor relay been stored?	Yes	Go to the applicable DTC inspection.
		No	Go to the next step.
2	**VERIFY IF CURRENT CONCERNED INPUT SIGNAL STATUS IS INTERMITTENT OR CONSTANT** • Turn the ignition switch off. • Connect WDS or equivalent to DLC-2. • Start engine and drive vehicle. • Access LF_WSPD, LR_WSPD, RF_WSPD and RR_WSPD using the WDS or equivalent • Do vehicle speeds correspond approximately to the four PIDs above?	Yes	Go to Step 8.
		No	If there is a difference in speed of four wheels: Go to the next step. If any wheel speed is **0 km/h {0 mph}**: Go to Step 4.
3	**INSPECT ABS WHEEL-SPEED SENSOR OUTPUT PULSE** • Start engine and drive vehicle. • Inspect output voltage pattern using an oscilloscope. 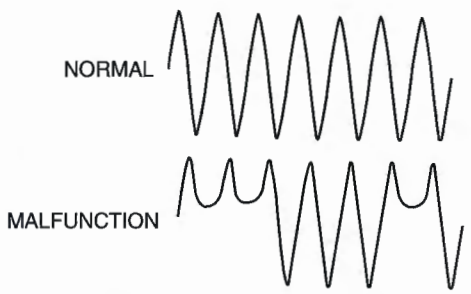 • Is output voltage pattern okay?	Yes	Go to Step 9.
		No	Go to Step 6.
4	**INSPECT ABS WHEEL-SPEED SENSOR CIRCUIT FOR SHORT TO GROUND** • Turn the ignition switch off. • Disconnect ABS/TCS HU/CM and ABS wheel-speed sensor connectors. • Inspect continuity between suspected sensor terminal (s) of ABS/TCS HU/CM connector (harness side) and ground (s). — RF ABS wheel-speed sensor: G—ground — LF ABS wheel-speed sensor: I—ground — RR ABS wheel-speed sensor: A—ground — LR ABS wheel-speed sensor: C—ground • Is there continuity?	Yes	Repair or replace harness for short to ground circuit between ABS/TCS HU/CM and ABS wheel-speed sensor, then go to Step 9.
		No	Go to the next step.
5	**INSPECT ABS WHEEL-SPEED SENSOR** • Turn the ignition switch off. • Disconnect suspected ABS wheel-speed sensor connector (s) and inspect resistance between ABS wheel-speed sensor terminal (s) (part side). • Is resistance **within 1.3—1.7 kilohm**?	Yes	Go to the next step.
		No	Replace ABS wheel-speed sensor (s), then go to Step 9.
6	**INSPECT SENSOR ROTOR CLEARANCE** • Jack-up vehicle and support it with safety stands. • Remove suspected wheel (s). • Inspect clearance between ABS wheel-speed sensor and sensor rotor. • Is clearance **within 0.3—1.1 mm {0.012—0.043 in}**?	Yes	Go to the next step.
		No	Replace ABS wheel-speed sensor (s), then go to Step 9.

STEP	INSPECTION		ACTION
7	**INSPECT SENSOR ROTOR FOR DAMAGE** • Jack-up vehicle and support it with safety stands. • Remove suspected wheel (s). • Visually inspect sensor rotor for missing, deformed and obstructed teeth. **Number of teeth: 44** • Is sensor rotor okay?	Yes	Go to the next step.
		No	Replace sensor rotor, then go to Step 9.
8	**INSPECT ABS/TCS HU/CM OPERATION** • Perform ABS/TCS HU/CM system inspection. (See 04–13–3 ABS/TCS HU/CM SYSTEM INSPECTION) • Is it normal?	Yes	Go to the next step.
		No	Replace ABS/TCS HU/CM, then go to the next step.
9	**VERIFY TROUBLESHOOTING COMPLETED** • Make sure to reconnect all disconnected connectors. • Clear the DTC from the memory (See 04–02A–3 Clearing DTCs Procedures) • Start engine and drive vehicle at **10 km/h {6.2 mph}** or above. • Gradually slow down vehicle and stop. • Is same DTC present?	Yes	Replace ABS/TCS HU/CM, then go to the next step.
		No	Go to the next step.
10	**VERIFY AFTER REPAIR PROCEDURE** • Is there any other DTC present?	Yes	Go to the applicable DTC inspection.
		No	Troubleshooting completed.

DTC C1186, C1266 [ABS/TCS]

E6U040200000W11

DTC C1186, C1266	Fail-safe relay
DETECTION CONDITION	• C1186: — Fail-safe relay in ABS/TCS HU/CM stuck OFF when ignition key is turned ON, fail-safe relay ON is commanded. • C1266: — Fail-safe relay in ABS/TCS HU/CM stuck ON when ignition key is turned ON, fail-safe relay OFF is commanded.
POSSIBLE CAUSE	• Malfunction of fuse (ABS 60 A) • Open circuit in harness between ABS/TCS HU/CM terminal AA and battery positive terminal • Open circuit or short of fail-safe relay in ABS/TCS HU/CM • Stuck fail-safe relay in ABS/TCS HU/CM

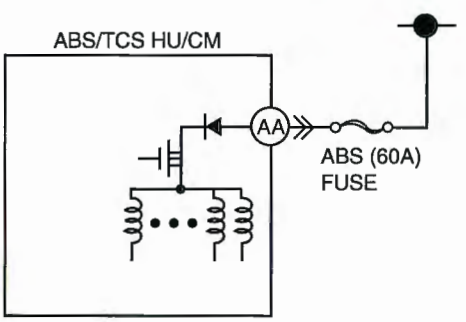

ABS/TCS HU/CM HARNESS-SIDE CONNECTOR

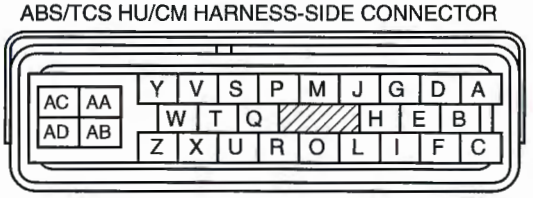

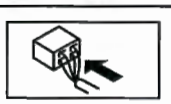

Diagnostic procedure

STEP	INSPECTION		ACTION
1	**INSPECT ABS FUSE CONDITION** • Is ABS fuse (60 A) normal?	Yes	Go to the next step.
		No	Replace fuse, then go to Step 4.
2	**INSPECT FAIL-SAFE RELAY POWER SUPPLY CIRCUIT FOR OPEN CIRCUIT** • Turn the ignition switch off. • Disconnect ABS/TCS HU/CM connector. • Turn the ignition switch to the ON position (engine off). • Measure voltage between ABS/TCS HU/CM terminal AA (harness-side) and ground. • Is voltage **B+**?	Yes	Go to the next step.
		No	Repair or replace harness for open circuit between battery positive terminal and ABS/TCS HU/CM terminal AA, then go to Step 4.
3	**VERIFY FAIL-SAFE OPERATION** • Turn the ignition switch off. • Connect WDS or equivalent to DLC-2. • Turn the ignition switch to the ON position (engine off). • Access ABS_VOLT using the WDS or equivalent. • Does fail-safe relay operate?	Yes	Go to the next step.
		No	Replace ABS/TCS HU/CM, then go to the next step.
4	**VERIFY TROUBLESHOOTING COMPLETED** • Clear the DTC from the memory. (See 04–02A–3 Clearing DTCs Procedures) • Is same DTC present?	Yes	Replace ABS/TCS HU/CM, then go to the next step.
		No	Go to the next step.
5	**VERIFY AFTER REPAIR PROCEDURE** • Is there any other DTC present?	Yes	Go to the applicable DTC inspection. (See 04–02A–4 DTC Table.)
		No	Troubleshooting completed.

DTC C1194, C1198, C1210, C1214, C1242, C1246, C1250, C1254 [ABS/TCS]

E6U040200000W12

DTC	**C1210**	**RF pressure reduction solenoid valve**
	C1214	**RF pressure retention solenoid valve**
	C1194	**LF pressure reduction solenoid valve**
	C1198	**LF pressure retention solenoid valve**
	C1246	**RR pressure reduction solenoid valve**
	C1254	**RR pressure retention solenoid valve**
	C1242	**LR pressure reduction solenoid valve**
	C1250	**LR pressure retention solenoid valve**
DETECTION CONDITION	• Solenoid monitor signal does not track in response to solenoid ON/OFF command.	
POSSIBLE CAUSE	• Open circuit, short to power supply, or short to ground circuit in ABS/TCS HU/CM • Stuck solenoid valve in ABS/TCS HU/CM	

Diagnostic procedure

STEP	INSPECTION		ACTION
1	**VERIFY SOLENOID VALVE OPERATION** • Turn the ignition switch off. • Connect WDS or equivalent to DLC-2. • Turn the ignition switch to the ON position (engine off). • Access solenoid valve (s) PIDs using the WDS or equivalent. • Does solenoid valve operate?	Yes	Go to the next step.
		No	Repair ABS/TCS HU/CM, then go to the next step.
2	**VERIFY TROUBLESHOOTING COMPLETED** • Clear the DTC from the memory. (See 04–02A–3 Clearing DTCs Procedures) • Start engine and drive vehicle at **10 km/h {6.2 mph}** or above. • Gradually slow down and stop vehicle. • Is same DTC present?	Yes	Replace ABS/TCS HU/CM, then go to the next step.
		No	Go to the next step.
3	**VERIFY AFTER REPAIR PROCEDURE** • Is there any other DTC present?	Yes	Go to the applicable DTC inspection. (See 04–02A–4 DTC Table.)
		No	Troubleshooting completed.

DTC C1414 [ABS/TCS]

E6U040200000W13

DTC C1414	ABS/TCS unit mismatched installation
DETECTION CONDITION	• Detection of situation where vehicle-type or drive system input signal and ABS/TCS HU/CM informatic remains incongruent through CAN information
POSSIBLE CAUSE	• Mismatched installation of ABS/TCS HU/CM

Diagnostic procedure

STEP	INSPECTION		ACTION
1	**INSPECT ABS/TCS HU/CM FOR MISMATCHED INSTALLATION** • Verify ABS/TCS HU/CM part number • Has a ABS/TCS HU/CM with the correct part number been installed?	Yes	Go to the next step.
		No	Replace with correct ABS/TCS HU/CM part number, then go to Step 7.
2	**INSPECT RELATED WIRING HARNESS FOR MISMATCHED INSTALLATION** • Verify wiring harness part number • Has a wiring harness with the correct part number been installed?	Yes	Go to the next step.
		No	Replace with correct ABS/TCS HU/CM part number, then go to next Step.
3	**Configulate ABS/TCS HU/CM** • Can ABS/TCS HU/CM configulate properly?	Yes	Go to the next step.
		No	Replace ABS/TCS HU/CM
4	**VERIFY TROUBLESHOOTING COMPLETED** • Make sure to reconnected all disconnect connectors. • Clear the DTC from the memory. See 04–02A–3 Clearing DTCs Procedures • Is same DTC present?	Yes	Replace ABS/TCS HU/CM, then go to the next step.
		No	Go to the next step.
5	**VERIFY AFTER REPAIR PROCEDURE** • Is there any other DTC present?	Yes	Go to the applicable DTC inspection.
		No	Troubleshooting completed.

DTC C1508 [ABS/TCS]

E6U040200000W14

DTC C1508	TCS control
DETECTION CONDITION	• TCS control continues operation for **60 seconds or more**.
POSSIBLE CAUSE	• System is normal. For protection of solenoid valves in the ABS/TCS HU/CM, or protection of the engine, sustained and continual control of TCS is inhibited.

Diagnostic procedure

STEP	INSPECTION		ACTION
1	**VERIFY CURRENT STATUS OF MALFUNCTION** • Clear the DTC from the memory. (See 04–02A–3 Clearing DTCs Procedures) • Start engine and drive vehicle at **10 km/h {6.2 mph}** or above. • Is same DTC present?	Yes	Replace ABS/TCS HU/CM, then go to the next step.
		No	Inspect intermittent concern using the same procedure as engine control system.
2	**VERIFY AFTER REPAIR PROCEDURE** • Is there any other DTC present?	Yes	Go to the applicable DTC inspection.
		No	Troubleshooting completed.

DTC C1510, C1511, C1512, C1513 [ABS/TCS]

E6U040200000W15

DTC		
	C1510	RF solenoid valve, motor or RF ABS wheel-speed sensor/ABS sensor rotor.
	C1511	LF solenoid valve, motor or LF ABS wheel-speed sensor/ABS sensor rotor.
	C1512	RR solenoid valve, motor or RR ABS wheel-speed sensor/ABS sensor rotor.
	C1513	LR solenoid valve, motor or LR ABS wheel-speed sensor/ABS sensor rotor.
DETECTION CONDITION	• Wheel lock is detected during ABS operation (pressure reduction inoperative). • Pressure reduction on a single wheel continues for **more than 20 seconds**.	
POSSIBLE CAUSE	• Malfunction of solenoid valve in ABS/TCS HU/CM • Malfunction of ABS wheel-speed sensor • Damaged sensor rotor • Stuck pump motor in ABS/TCS HU/CM	

Diagnostic procedure

STEP	INSPECTION		ACTION
1	**VERIFY OTHER DTC HAS BEEN RECORDED** • Has any ABS wheel-speed sensor, sensor rotor, solenoid valve, pump motor, or motor relay related DTC been output?	Yes	Go to the applicable DTC inspection.
		No	Go to the next step.
2	**INSPECT ABS/TCS HU/CM OPERATION** • Perform ABS/TCS HU/CM system inspection. (See 04–13–3 ABS/TCS HU/CM SYSTEM INSPECTION) • Is it normal?	Yes	Go to the next step.
		No	Replace ABS/TCS HU/CM, then go to the next step.
3	**VERIFY CURRENT STATUS OF MALFUNCTION** • Clear the DTC from the memory. (See 04–02A–3 Clearing DTCs Procedures) • Start engine and drive vehicle at **10 km/h {6.2 mph}** or above at least one minute. • Gradually slow down and stop vehicle. • Is same DTC present?	Yes	Replace ABS/TCS HU/CM, then go to the next step.
		No	Go to the next step.
4	**VERIFY AFTER REPAIR PROCEDURE** • Is there any other DTC present?	Yes	Go to the applicable DTC inspection.
		No	Troubleshooting completed.

DTC U2021[ABS/TCS]

E6U040200000W16

Note

- To warm up the engine completely, idle the engine and wait for **more than 5 minutes**.

DTC U2021		Engine coolant temperature
DETECTION CONDITION	• After engine is warmed up, engine coolant temperature is **0 °C {32 °F}** or less, and TCS operation is inhibited by PCM.	
POSSIBLE CAUSE	• System is normal. When engine coolant temperature rises, TCS operation is executed by PCM.	

Diagnostic procedure

STEP	INSPECTION		ACTION
1	**INSPECT WHETHER ENGINE HAS WARMED UP** • Has engine warmed up?	Yes	Go to the next step.
		No	Warm up the engine. If TCS OFF light goes out, system is normal.
2	**VERIFY THAT MALFUNCTION SYMPTOM OCCURS AFTER ENGINE IS WARMED UP** • Warm up the engine. • Is TCS indicator light also illuminated and DTC C1119 obtained?	Yes	Go to DTC C1119 chart.
		No	If TCS OFF light goes out, system is normal. If TCS OFF light does not goes out, go to the next step.
3	**VERIFY TROUBLESHOOTING COMPLETED** • Clear the DTC from the memory. (See 04–02A–3 Clearing DTCs Procedures) • Is same DTC present?	Yes	Replace ABS/TCS HU/CM, then go to the next step.
		No	Go to the next step.
4	**VERIFY AFTER REPAIR PROCEDURE** • Is there any other DTC present?	Yes	Go to the applicable DTC inspection.
		No	Troubleshooting completed.

04–02B ON-BOARD DIAGNOSTIC [DYNAMIC STABILITY CONTROL]

DSC SYSTEM WIRING DIAGRAM 04–02B–2
DSC ON-BOARD DIAGNOSIS 04–02B–3
On-Board Diagnostic (OBD) Test Description 04–02B–3
Reading DTCs Procedure 04–02B–3
Clearing DTCs Procedures 04–02B–3
PID/Data Monitor and Record Procedure 04–02B–3
Active Command Modes Procedure 04–02B–4
DTC Table 04–02B–4
PID/DATA Monitor Table 04–02B–6
Active Command Modes Table 04–02B–10
DTC B1318 [DSC] 04–02B–10
DTC B1342 [DSC] 04–02B–11
DTC B1483, B1484, B1486 [DSC] 04–02B–12
DTC B1627 [DSC] 04–02B–14
DTC B2477 [DSC] 04–02B–15
DTC C1095, C1096 [DSC] 04–02B–15
DTC C1119 [DSC] 04–02B–17
DTC C1125 [DSC] 04–02B–18
DTC C1140 [DSC] 04–02B–19
DTC C1145, C1155, C1165, C1175 [DSC] 04–02B–20
DTC C1148, C1158, C1168, C1178, C1233, C1234, C1235, C1236 [DSC] 04–02B–22
DTC C1186, C1266 [DSC] 04–02B–24
DTC C1194, C1198, C1210, C1214, C1242, C1246, C1250, C1254, C1400, C1410, C1957, C1958 [DSC] 04–02B–25
DTC C1280, C1730, C1951, C1952, C1959 [DSC] 04–02B–26
DTC C1414 [DSC] 04–02B–28
DTC C1507, C1508 [DSC] 04–02B–28
DTC C1510, C1511, C1512, C1513 [DSC] 04–02B–29
DTC C1949, C1950 [DSC] 04–02B–30
DTC C1953, C1954 [DSC] 04–02B–32
DTC C1955, C1956 [DSC] 04–02B–33
DTC U2511 [DSC] 04–02B–34
Diagnostic procedure 04–02B–34

DSC SYSTEM WIRING DIAGRAM

E6U040200000W17

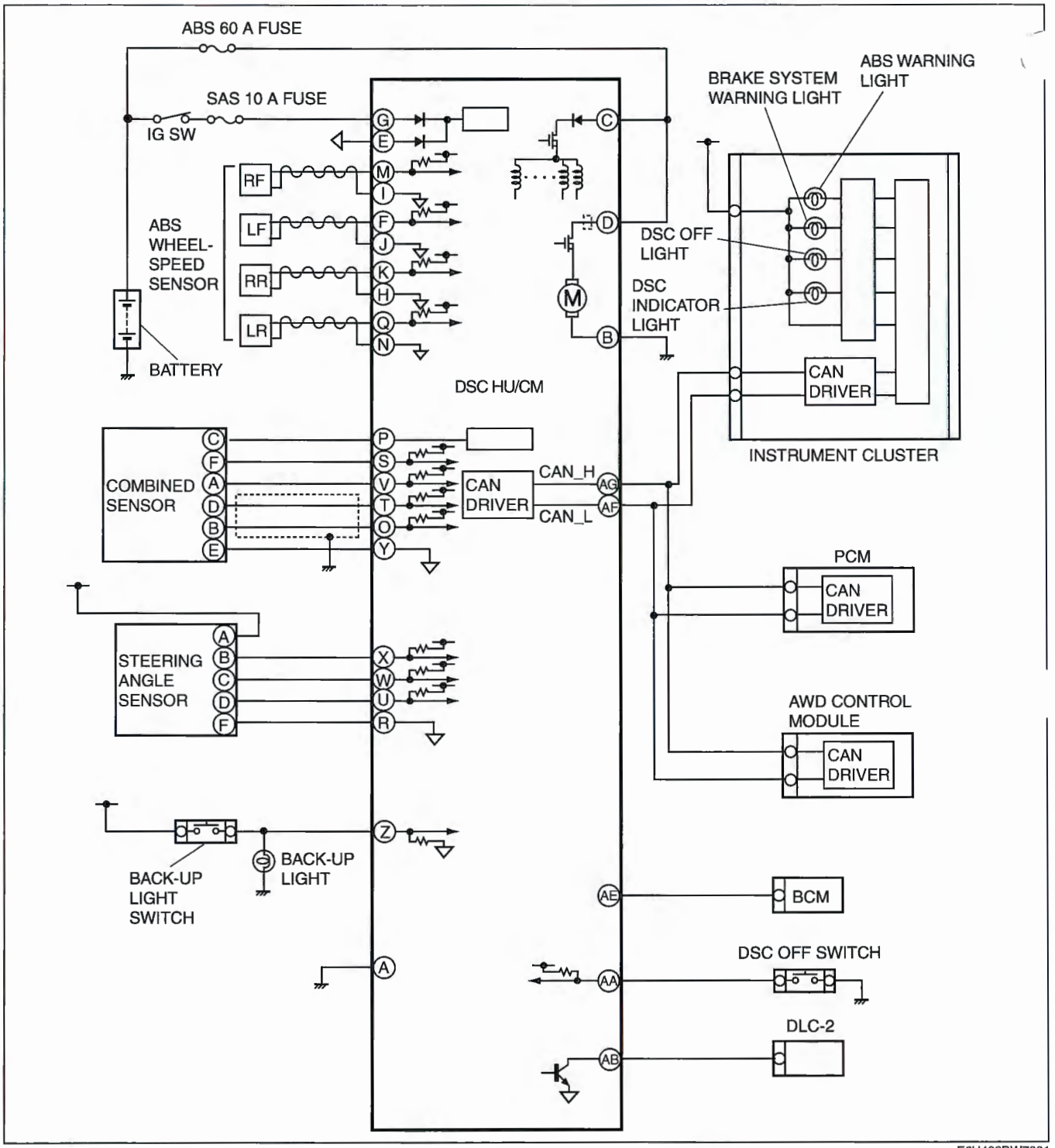

E6U402BW7001

DSC ON-BOARD DIAGNOSIS

E6U040200000W18

On-Board Diagnostic (OBD) Test Description

- The OBD test inspects the integrity and function of the DSC and outputs the results when requested by the specific tests.
- On-board diagnostic test also:
  - — Provides a quick inspection of the DSC usually performed at the start of each diagnostic procedure.
  - — Provides verification after repairs to ensure that no other faults occurred during service.
- The OBD test is divided into 3 tests:
  - — Read/clear diagnostic results, PID monitor and record and active command modes.

Read/clear diagnostic results

- This function allows you to read or clear DTCs in the DSC HU/CM memory.

PID/data monitor and record

- This function allows you to access certain data values, input signals, calculated values, and system status information.

Active command modes

- This function allows you to control devices through the WDS or equivalent.

Reading DTCs Procedure

1. Connect WDS or equivalent to the vehicle DLC-2 connector.
2. Retrieve DTC by WDS or equivalent.

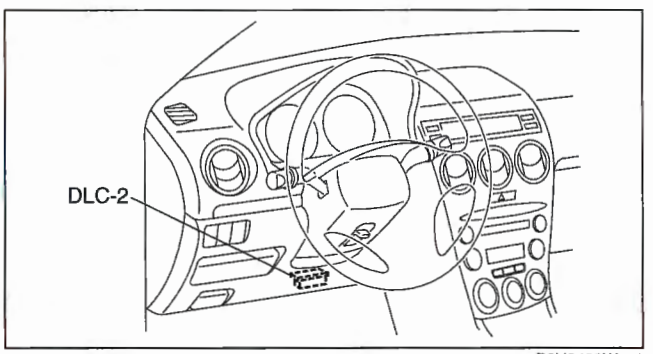

B6U0402W002

Clearing DTCs Procedures

1. After repairs have been made, perform the **DTCs reading procedure**.
2. Erase DTC by WDS or equivalent.
3. Ensure that the customer's concern has been resolved.

PID/Data Monitor and Record Procedure

1. Connect WDS or equivalent to the vehicle DLC-2 connector.
2. Access and monitor PIDs by WDS or equivalent.

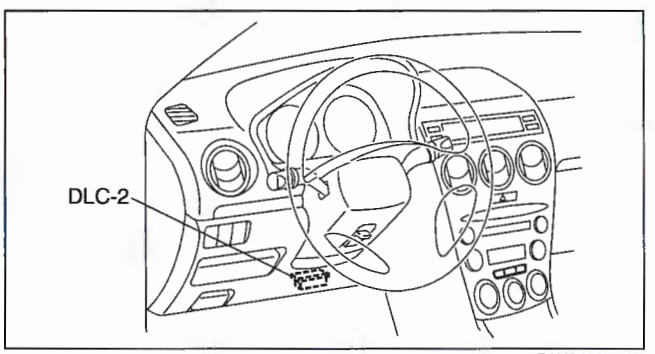

B6U0402W002

Active Command Modes Procedure

Note
- When driving, the ABS motor and each valve automatically turn ABS_POWER on, and then each command on. ABS_POWER regulates the power supply for the ABS motor and 8 valves.

1. Connect WDS or equivalent to the vehicle DLC-2 16-pin connector.
2. Turn the ignition switch to ON (Engine OFF) or start engine.
3. Activate active command modes using WDS or equivalent.

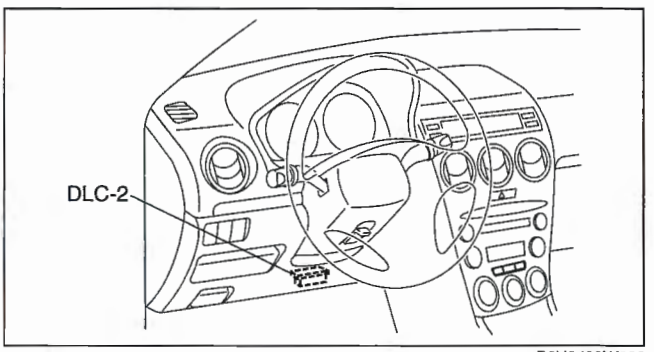

B6U0402W002

DTC Table

DTC WDS or equivalent	Diagnosis system component	Page
B1318	DSC power supply	(See 04–02B–10 DTC B1318 [DSC].)
B1342	DSC HU/CM	(See 04–02B–11 DTC B1342 [DSC].)
B1483	Brake switch signal	(See 04–02B–12 DTC B1483, B1484, B1486 [DSC].)
B1484	Brake switch signal	(See 04–02B–12 DTC B1483, B1484, B1486 [DSC].)
B1486	Brake switch signal	(See 04–02B–12 DTC B1483, B1484, B1486 [DSC].)
B1627	Reverse signal	(See 04–02B–14 DTC B1627 [DSC].)
B2477	Module configuration	(See 04–02B–15 DTC B2477 [DSC].)
C1095	Motor relay, pump motor	(See 04–02B–15 DTC C1095, C1096 [DSC].)
C1096	Motor relay, pump motor	(See 04–02B–15 DTC C1095, C1096 [DSC].)
C1119	Engine control system	(See 04–02B–17 DTC C1119 [DSC].)
C1125	Brake fluid level sensor	(See 04–02B–18 DTC C1125 [DSC].)
C1140	DSC HU/CM (pump)	(See 04–02B–19 DTC C1140 [DSC].)
C1145	Right front ABS wheel-speed sensor	(See 04–02B–20 DTC C1145, C1155, C1165, C1175 [DSC].)
C1148	Right front ABS wheel-speed sensor/sensor rotor	(See 04–02B–22 DTC C1148, C1158, C1168, C1178, C1233, C1234, C1235, C1236 [DSC].)
C1155	Left front ABS wheel-speed sensor	(See 04–02B–20 DTC C1145, C1155, C1165, C1175 [DSC].)
C1158	Left front ABS wheel-speed sensor/sensor rotor	(See 04–02B–22 DTC C1148, C1158, C1168, C1178, C1233, C1234, C1235, C1236 [DSC].)
C1165	Right rear ABS wheel-speed sensor	(See 04–02B–20 DTC C1145, C1155, C1165, C1175 [DSC].)
C1168	Right rear ABS wheel-speed sensor/sensor rotor	(See 04–02B–22 DTC C1148, C1158, C1168, C1178, C1233, C1234, C1235, C1236 [DSC].)
C1175	Left rear ABS wheel-speed sensor	(See 04–02B–20 DTC C1145, C1155, C1165, C1175 [DSC].)
C1178	Left rear ABS wheel-speed sensor/sensor rotor	(See 04–02B–22 DTC C1148, C1158, C1168, C1178, C1233, C1234, C1235, C1236 [DSC].)
C1186	Fail-safe relay	(See 04–02B–24 DTC C1186, C1266 [DSC].)
C1194	Left front pressure reduction solenoid valve	(See 04–02B–25 DTC C1194, C1198, C1210, C1214, C1242, C1246, C1250, C1254, C1400, C1410, C1957, C1958 [DSC].)

DTC WDS or equivalent	Diagnosis system component	Page
C1198	Left front pressure retention solenoid valve	(See 04–02B–25 DTC C1194, C1198, C1210, C1214, C1242, C1246, C1250, C1254, C1400, C1410, C1957, C1958 [DSC].)
C1210	Right front pressure reduction solenoid valve	(See 04–02B–25 DTC C1194, C1198, C1210, C1214, C1242, C1246, C1250, C1254, C1400, C1410, C1957, C1958 [DSC].)
C1214	Right front pressure retention solenoid valve	(See 04–02B–25 DTC C1194, C1198, C1210, C1214, C1242, C1246, C1250, C1254, C1400, C1410, C1957, C1958 [DSC].)
C1233	Left front ABS wheel-speed sensor/sensor rotor	(See 04–02B–22 DTC C1148, C1158, C1168, C1178, C1233, C1234, C1235, C1236 [DSC].)
C1234	Right front ABS wheel-speed sensor/sensor rotor	(See 04–02B–22 DTC C1148, C1158, C1168, C1178, C1233, C1234, C1235, C1236 [DSC].)
C1235	Right rear ABS wheel-speed sensor/sensor rotor	(See 04–02B–22 DTC C1148, C1158, C1168, C1178, C1233, C1234, C1235, C1236 [DSC].)
C1236	Left rear ABS wheel-speed sensor/sensor rotor	(See 04–02B–22 DTC C1148, C1158, C1168, C1178, C1233, C1234, C1235, C1236 [DSC].)
C1242	Left rear pressure reduction solenoid valve	(See 04–02B–25 DTC C1194, C1198, C1210, C1214, C1242, C1246, C1250, C1254, C1400, C1410, C1957, C1958 [DSC].)
C1246	Right rear pressure reduction solenoid valve	(See 04–02B–25 DTC C1194, C1198, C1210, C1214, C1242, C1246, C1250, C1254, C1400, C1410, C1957, C1958 [DSC].)
C1250	Left rear pressure retention solenoid valve	(See 04–02B–25 DTC C1194, C1198, C1210, C1214, C1242, C1246, C1250, C1254, C1400, C1410, C1957, C1958 [DSC].)
C1254	Right rear ABS pressure retention solenoid valve	(See 04–02B–25 DTC C1194, C1198, C1210, C1214, C1242, C1246, C1250, C1254, C1400, C1410, C1957, C1958 [DSC].)
C1266	Fail-safe relay	(See 04–02B–24 DTC C1186, C1266 [DSC].)
C1280	Combined sensor	(See 04–02B–26 DTC C1280, C1730, C1951, C1952, C1959 [DSC].)
C1400	Right front traction switch solenoid valve	(See 04–02B–25 DTC C1194, C1198, C1210, C1214, C1242, C1246, C1250, C1254, C1400, C1410, C1957, C1958 [DSC].)
C1410	Left front traction switch solenoid valve	(See 04–02B–25 DTC C1194, C1198, C1210, C1214, C1242, C1246, C1250, C1254, C1400, C1410, C1957, C1958 [DSC].)
C1414	DSC HU/CM	(See 04–02B–28 DTC C1414 [DSC].)
C1507	DSC control	(See 04–02B–28 DTC C1507, C1508 [DSC].)
C1508	DSC control	(See 04–02B–28 DTC C1507, C1508 [DSC].)
C1510	Right front solenoid valve, motor or ABS wheel-speed sensor/sensor rotor	(See 04–02B–29 DTC C1510, C1511, C1512, C1513 [DSC].)
C1511	Left front solenoid valve, motor or ABS wheel-speed sensor/sensor rotor	(See 04–02B–29 DTC C1510, C1511, C1512, C1513 [DSC].)
C1512	Right rear solenoid valve, motor or ABS wheel-speed sensor/sensor rotor	(See 04–02B–29 DTC C1510, C1511, C1512, C1513 [DSC].)
C1513	Left rear solenoid valve, motor or ABS wheel-speed sensor/sensor rotor	(See 04–02B–29 DTC C1510, C1511, C1512, C1513 [DSC].)
C1730	Combined sensor	(See 04–02B–26 DTC C1280, C1730, C1951, C1952, C1959 [DSC].)
C1949	Combined sensor	(See 04–02B–30 DTC C1949, C1950 [DSC].)
C1950	Combined sensor	(See 04–02B–30 DTC C1949, C1950 [DSC].)
C1951	Combined sensor	(See 04–02B–26 DTC C1280, C1730, C1951, C1952, C1959 [DSC].)
C1952	Combined sensor	(See 04–02B–26 DTC C1280, C1730, C1951, C1952, C1959 [DSC].)
C1953	Brake fluid pressure sensor	(See 04–02B–32 DTC C1953, C1954 [DSC].)
C1954	Brake fluid pressure sensor	(See 04–02B–32 DTC C1953, C1954 [DSC].)

DTC WDS or equivalent	Diagnosis system component	Page
C1955	Steering angle sensor	(See 04–02B–33 DTC C1955, C1956 [DSC].)
C1956	Steering angle sensor	(See 04–02B–33 DTC C1955, C1956 [DSC].)
C1957	Right front stability control solenoid valve	(See 04–02B–25 DTC C1194, C1198, C1210, C1214, C1242, C1246, C1250, C1254, C1400, C1410, C1957, C1958 [DSC].)
C1958	Left front stability control solenoid valve	(See 04–02B–25 DTC C1194, C1198, C1210, C1214, C1242, C1246, C1250, C1254, C1400, C1410, C1957, C1958 [DSC].)
C1959	Combined sensor	(See 04–02B–26 DTC C1280, C1730, C1951, C1952, C1959 [DSC].)
U0073	CAN system communication error	(See 09–02B–4 DTC TABLE [MULTIPLEX COMMUNICATION SYSTEM (L3 WITH TC)])
U0100	Communication error to PCM	(See 09–02B–4 DTC TABLE [MULTIPLEX COMMUNICATION SYSTEM (L3 WITH TC)])
U0114	Communication error to AWD control module	(See 09–02B–4 DTC TABLE [MULTIPLEX COMMUNICATION SYSTEM (L3 WITH TC)])
U0155	Communication error to instrument cluster	(See 09–02B–4 DTC TABLE [MULTIPLEX COMMUNICATION SYSTEM (L3 WITH TC)])
U2511	Abnormal message from AWD control module	(See 04–02B–34 DTC U2511 [DSC].)

PID/DATA Monitor Table

PID Name (Definition)	Unit/Condition	Condition/Specification	Action	DSC HU/CM terminal
ABS_LAMP (ABS warning light driver output state)	On/Off	• ABS warning light is illuminated: ON • ABS warning light is not illuminated: Off	Inspect ABS warning light.	—
ABSLF_I (Left front ABS pressure retention solenoid valve output state)	On/Off	• During ABS control: On/Off (solenoid valve is activated/deactivated) • Not ABS control: Off (solenoid valve is deactivated)	Internal fault of DSC HU/CM. Replace DSC HU/CM. (See 04–15–7 DSC HU/CM REMOVAL/INSTALLATION.)	—
ABSLF_O (Left front ABS pressure reduction solenoid valve output state)	On/Off	• During ABS control: On/Off (solenoid valve is activated/deactivated) • Not ABS control: Off (solenoid valve is deactivated)	Internal fault of DSC HU/CM. Replace DSC HU/CM. (See 04–15–7 DSC HU/CM REMOVAL/INSTALLATION.)	—
ABSLR_I (Left rear ABS pressure retention solenoid valve output state)	On/Off	• During ABS or EBD control: On/Off (solenoid valve is activated/deactivated) • Not ABS and EBD control: Off (solenoid valve is deactivated)	Internal fault of DSC HU/CM. Replace DSC HU/CM. (See 04–15–7 DSC HU/CM REMOVAL/INSTALLATION.)	—
ABSLR_O (Left rear ABS pressure reduction solenoid valve output state)	On/Off	• During ABS or EBD control: On/Off (solenoid valve is activated/deactivated) • Not ABS and EBD control: Off (solenoid valve is deactivated)	Internal fault of DSC HU/CM. Replace DSC HU/CM. (See 04–15–7 DSC HU/CM REMOVAL/INSTALLATION.)	—
ABSRF_I (Right front ABS pressure retention solenoid valve output state)	On/Off	• During ABS control: On/Off (solenoid valve is activated/deactivated) • Not ABS control: Off (solenoid valve is deactivated)	Internal fault of DSC HU/CM. Replace DSC HU/CM. (See 04–15–7 DSC HU/CM REMOVAL/INSTALLATION.)	—

PID Name (Definition)	Unit/Condition	Condition/Specification	Action	DSC HU/CM terminal
ABSRF_O (Right front ABS pressure reduction solenoid valve output state)	On/Off	• During ABS control: On/Off (solenoid valve is activated/deactivated) • Not ABS control: Off (solenoid valve is deactivated)	Internal fault of DSC HU/CM. Replace DSC HU/CM. (See 04–15–7 DSC HU/CM REMOVAL/INSTALLATION.)	—
ABSRR_I (Right rear ABS pressure reduction solenoid valve output state)	On/Off	• During ABS control: On/Off (solenoid valve is activated/deactivated) • Not ABS control: Off (solenoid valve is deactivated)	Internal fault of DSC HU/CM. Replace DSC HU/CM. (See 04–15–7 DSC HU/CM REMOVAL/INSTALLATION.)	—
ABSRR_O (Right rear ABS pressure reduction solenoid valve output state)	On/Off	• During ABS control: On/Off (solenoid valve is activated/deactivated) • Not ABS control: Off (solenoid valve is deactivated)	Internal fault of DSC HU/CM. Replace DSC HU/CM. (See 04–15–7 DSC HU/CM REMOVAL/INSTALLATION.)	—
ABSPMPRLY (Motor relay output state)	On/Off	• Motor relay is activated: On • Motor relay is deactivated: Off	Inspect DSC HU/CM. (See 04–15–9 DSC HU/CM INSPECTION.)	—
ABSVLVRLY (Fail-safe relay output state)	On/Off	• Fail-safe relay is activated: On • Fail-safe relay is deactivated: Off	Inspect DSC HU/CM. (See 04–15–9 DSC HU/CM INSPECTION.)	—
ABS_VOLT (System battery voltage value)	V	• Ignition key at ON: **B+** • Idle: **Approx. 14—16 V**	Inspect power supply circuit. (See 04–15–9 DSC HU/CM INSPECTION.)	G
ACCLMTR (Forward-G sensor input)	G	• Vehicle is stopped or driving at a constant speed: **0 G** • Cornering to left: Changes between **0 G and 1.5 G** • Cornering to right: Changes between **0 G and -1.5 G**	Inspect combined sensor. (See 04–15–12 COMBINED SENSOR INSPECTION.)	V
AWD_MSG (Missing message from the AWD control module)	Present/ Not Present	• Present: Circuit in the AWD control module is normal. • Not Present: Circuit in the AWD control module is abnormal.	Inspect AWD control module. (See 03–19–3 AWD CONTROL MODULE INSPECTION) Inspect DSC HU/CM. (See 04–15–9 DSC HU/CM INSPECTION)	—
BOO_ABS (Brake pedal switch input)	On/Off	• Brake pedal is depressed: On • Brake pedal is released: Off	Inspect brake switch. (See 04–11–9 BRAKE SWITCH INSPECTION.)	—
BRK_FLUID (Brake fluid level sensor input)	OK/Low	• Brake fluid is above LOW: OK • Brake fluid is below LOW: Low	Inspect brake fluid level. Inspect brake fluid level sensor. (See 04–11–12 BRAKE FLUID LEVEL SENSOR INSPECTION.)	—
BRAKE_LMP (BRAKE system warning light output state)	On/Off	• BRAKE system warning light is illuminated: On • BRAKE system warning light is not illuminated: Off	Inspect BRAKE system warning light.	—
CCNTABS (Number of continuous codes)	—	DTC is detected: 1—255 DTC is not detected: 0	Perform inspection using appropriate DTC.	—

PID Name (Definition)	Unit/Condition	Condition/Specification	Action	DSC HU/CM terminal
IC_MSG (Missing message from the instrument cluster)	Present/ Not Present	• Present: Circuit in the instrument cluster is normal. • Not Present: Circuit in the instrument cluster is abnormal.	Inspect instrument cluster. (See 09–22–5 INSTRUMENT CLUSTER INSPECTION) Inspect DSC HU/CM. (See 04–15–9 DSC HU/CM INSPECTION)	—
LAT_ACCL (Lateral-G sensor input)	G	• Vehicle is stopped or driving straight: 0 G • Cornering to left: Changes between **0 G and 1.5 G** • Cornering to right: Changes between **0 G and -1.5 G**	Inspect combined sensor. (See 04–15–12 COMBINED SENSOR INSPECTION.)	O
L_DSC_O (Stability control solenoid valve (LF-RR))	On/Off	• Solenoid valve is activated: On • Solenoid valve is deactivated: Off	Internal fault of DSC HU/CM. Replace DSC HU/CM. (See 04–15–7 DSC HU/CM REMOVAL/INSTALLATION.)	—
LF_WSPD (Left front ABS wheel-speed sensor input)	KPH, MPH	• Vehicle is stopped: **0 KPH {0 MPH}** • Vehicle is driving: Indicates vehicle speed	Inspect ABS wheel-speed sensor/sensor rotor. (See 04–15–11 FRONT/ REAR ABS WHEEL-SPEED SENSOR INSPECTION.)	F, J
LR_WSPD (Left rear ABS wheel-speed sensor input)	KPH, MPH	• Vehicle is stopped: **0 KPH {0 MPH}** • Vehicle is driving: Indicates vehicle speed	Inspect ABS wheel-speed sensor/sensor rotor. (See 04–15–11 FRONT/ REAR ABS WHEEL-SPEED SENSOR INSPECTION.)	N, Q
MCYLI P (Brake fluid pressure sensor input)	Pa	• Brake pedal is released: **0 Pa** • Brake pedal is depressed: Changes between **0 Pa and 25.5 MPa**	Inspect DSC HU/CM. (See 04–15–9 DSC HU/CM INSPECTION.)	—
PCM_MSG (Missing message from the PCM)	Present/ Not Present	• Present: Circuit in the PCM is normal. • Not Present: Circuit in the PCM is abnormal.	Inspect PCM. (See 01–40B–6 PCM INSPECTION [L3 WITH TC].) Inspect DSC HU/CM. (See 04–15–7 DSC HU/CM REMOVAL/INSTALLATION.)	—
PMPSTAT (Pump motor output state)	On/Off	• Pump motor activate: On • Pump motor not activate: Off	Internal fault of DSC HU/CM. Replace DSC HU/CM. (See 04–15–7 DSC HU/CM REMOVAL/INSTALLATION.)	—
R_DSC_O (Stability control solenoid valve (RF-LR))	On/Off	• Solenoid valve is activated: On • Solenoid valve is deactivated: Off	Internal fault of DSC HU/CM. Replace DSC HU/CM. (See 04–15–7 DSC HU/CM REMOVAL/INSTALLATION.)	—
RF_WSPD (Right front ABS wheel-speed sensor input)	KPH, MPH	• Vehicle is stopped: **0 KPH {0 MPH}** • Vehicle is driving: Indicates vehicle speed	Inspect ABS wheel-speed sensor/sensor rotor. (See 04–15–11 FRONT/ REAR ABS WHEEL-SPEED SENSOR INSPECTION.)	I, M
RPM (Engine speed signal input)	RPM	• Engine is stopped: **0 RPM** • Engine is running: Indicates engine speed	Inspect PCM. (See 01–40B–6 PCM INSPECTION [L3 WITH TC].)	—
RR_WSPD (Right rear ABS wheel-speed sensor input)	KPH, MPH	• Vehicle is stopped: **0 KPH {0 MPH}** • Vehicle is driving: Indicates vehicle speed	Inspect ABS wheel-speed sensor/sensor rotor. (See 04–15–11 FRONT/ REAR ABS WHEEL-SPEED SENSOR INSPECTION.)	H, K

PID Name (Definition)	Unit/Condition	Condition/Specification	Action	DSC HU/CM terminal
SWA_POS (Steering angle sensor input)	°	• Steering wheel is in neutral position: **0 °** • Steering wheel is turned to left: Changes between **0 ° and -1,640 °** • Steering wheel is turned to right: Changes between **0 ° and 1,640 °**	Inspect steering angle sensor. (See 09–18–20 STEERING ANGLE SENSOR INSPECTION.)	R, U, W, X
TC LVAL (Traction switch solenoid valve (LF-RR))	On/Off	• Solenoid valve is activated: On • Solenoid valve is deactivated: Off	Internal fault of DSC HU/CM. Replace DSC HU/CM. (See 04–15–7 DSC HU/CM REMOVAL/INSTALLATION.)	—
TC RVAL (Traction switch solenoid valve (RF-LR))	On/Off	• Solenoid valve is activated: On • Solenoid valve is deactivated: Off	Internal fault of DSC HU/CM. Replace DSC HU/CM. (See 04–15–7 DSC HU/CM REMOVAL/INSTALLATION.)	—
TPI (Throttle position signal input)	%	• Closed throttle position: **0%** • Wide open throttle: Changes between **0% and 100%**	Inspect PCM and throttle position sensor. (See 01–40B–6 PCM INSPECTION [L3 WITH TC].) (See 01–40B–27 THROTTLE POSITION (TP) SENSOR INSPECTION [L3 WITH TC].)	—
TRAC_SW (DSC OFF switch input)	On/Off	• DSC OFF switch is depressed: On • DSC OFF switch is released: Off	Inspect DSC OFF switch. (See 04–15–15 DSC OFF SWITCH INSPECTION.)	AA
TRANSGR (Transaxle gear position input)	1/2/3/4/5/6/R/N/ Error	• Transaxle gear /selector lever position* 1GR: 1 2GR: 2 3GR: 3 4GR: 4 5GR: 5 6GR: 6 Reverse: R Neutral: N When gear position estimation is disabled: Error	Inspect PCM. (See 01–40B–6 PCM INSPECTION [L3 WITH TC].)	—
YAW_RATE (Yaw rate sensor input)	°/s	• Vehicle is stopped or driving straight: **0 °/s** • Cornering to left: Changes between **0 °/s and 150 °/s** • Cornering to right: Changes between **0 °/s and -150 °/s**	Inspect combined sensor. (See 04–15–12 COMBINED SENSOR INSPECTION.)	T

*3 : The displayed gear position is an estimated value based on the vehicle wheel speed and engine speed

Active Command Modes Table

Command Name	Definition	Operation	Note
ABS_POWER	Fail-safe relay	On/Off	Ignition key at ON (Engine OFF), and driving
LATACCEL	Lateral-G sensor initialization	TRUE/FALSE	
LF_DSC_V	Stability control solenoid valve (LF-RR)	On/Off	
LF_INLET	Left front ABS pressure retention solenoid valve	On/Off	
LF_OUTLET	Left front ABS pressure reduction solenoid valve	On/Off	
LF_TC_VLV	Traction switch solenoid valve (LF-RR)	On/Off	
LR_INLET	Left rear ABS pressure retention solenoid valve	On/Off	
LR_OUTLET	Left rear ABS pressure reduction solenoid valve	On/Off	
PMP_MOTOR	ABS motor	On/Off	
RF_DSC_V	Stability control solenoid valve (RF-LR)	On/Off	
RF_INLET	Right front ABS pressure retention solenoid valve	On/Off	
RF_OUTLET	Right front ABS pressure reduction solenoid valve	On/Off	
RF_TC_VLV	Traction switch solenoid valve (RF-LR)	On/Off	
RR_INLET	Right rear ABS pressure retention solenoid valve	On/Off	
RR_OUTLET	Right rear ABS pressure reduction solenoid valve	On/Off	
STAB_IND	DSC indicator light	On/Off	
TRAC OFF	DSC OFF light	On/Off	
YAWRATE	Yaw rate sensor initialization	On/Off	

DTC B1318 [DSC]

E6U040200000W19

DTC B1318	DSC power supply
DETECTION CONDITION	• Low voltage is detected at the voltage monitor of solenoid valve monitor, or the motor monitor
POSSIBLE CAUSE	• Malfunction of fuse (SAS 10 A) • Open or short to power circuit in harness between DSC HU/CM terminal G and battery positive termir • Open circuit in harness between body ground and DSC HU/CM terminal A • Battery and/or generator malfunction

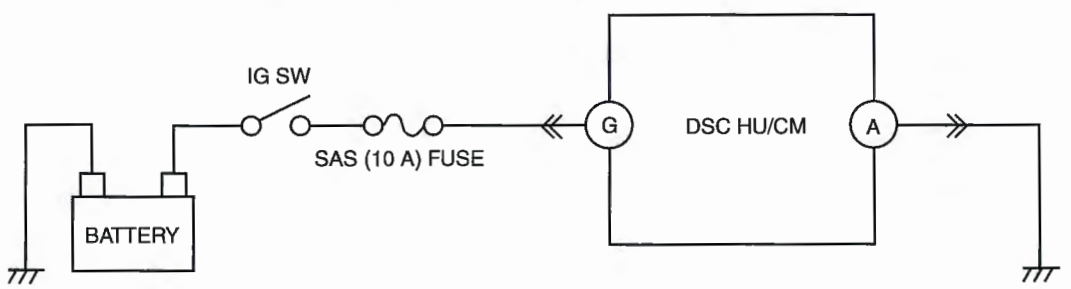

DSC HU/CM HARNESS-SIDE CONNECTOR

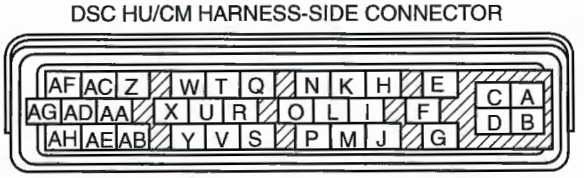

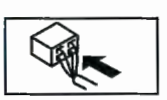

Diagnostic procedure

STEP	INSPECTION		ACTION
1	**INSPECT BATTERY VOLTAGE** • Is battery terminal voltage normal?	Yes	Make sure that battery terminal connection is normal. Go to next step.
		No	Charge or replace battery, then go to Step 6.
2	**INSPECT BATTERY GRAVITY** • Is battery specific gravity as specified?	Yes	Go to next step.
		No	Replace battery, then go to Step 6.
3	**INSPECT CHARGING SYSTEM** • Are generator and drive belt tension normal?	Yes	Go to next step.
		No	Adjust drive belt tension as necessary. Replace generator and/or drive belt as necessary.
4	**INSPECT DSC HU/CM POWER SUPPLY CIRCUIT FOR OPEN CIRCUIT** • Start engine. • Measure voltage between DSC HU/CM terminal G and ground. • Is voltage **above 10 V**?	Yes	Go to next step.
		No	Go to Step 6.
5	**INSPECT DSC HU/CM GROUND CIRCUIT FOR POOR GROUND OR OPEN CIRCUIT** • Turn ignition key to OFF. • Measure resistance between ground and DSC HU/CM terminal A. • Is resistance **within 0—1 ohm**?	Yes	Go to next step.
		No	If there is no continuity: • Repair or replace harness for open circuit between DSC HU/CM and ground, then go to next step. If resistance is not **within 0—1 ohm**: • Repair or replace harness for poor ground then go to next step.
6	**VERIFY TROUBLESHOOTING COMPLETED** • Make sure to reconnect all disconnected connectors. • Clear DTC from memory. (See 04–02B–3 Clearing DTCs Procedures.) • Is same DTC present?	Yes	Replace DSC HU/CM, then go to next step.
		No	Go to next step.
7	**VERIFY THAT NO OTHER DTCS ARE PRESENT** • Are any other DTCs output?	Yes	Go to the applicable DTC inspection. (See 04–02B–4 DTC Table.)
		No	DTC troubleshooting completed.

04–02B

DTC B1342 [DSC]

E6U040200000W20

DTC B1342	DSC HU/CM
DETECTION CONDITION	The on-board diagnostic function detects control module malfunction.
POSSIBLE CAUSE	• Malfunction of DSC HU/CM

Diagnostic procedure

STEP	INSPECTION		ACTION
1	**VERIFY CURRENT STATUS OF MALFUNCTION** • Clear DTC from memory. (See 04–02B–3 Clearing DTCs Procedures.) • Start engine and drive vehicle at **10 km/h {6.2 mph}** or above. • Is same DTC present?	Yes	Replace DSC HU/CM, then go to next step.
		No	Inspect intermittent concern using the same procedure as engine control system.
2	**VERIFY THAT NO OTHER DTCS ARE PRESENT** • Are any other DTCs output?	Yes	Go to the applicable DTC inspection. (See 04–02B–4 DTC Table.)
		No	DTC troubleshooting completed.

DTC B1483, B1484, B1486 [DSC]

E6U040200000W21

DTC B1483, B1484, B1486	Brake switch signal
DETECTION CONDITION	• B1483 — A signal error is input for **5 s or more** from the brake switch. • B1484 — The brake switch on signal is input continuously for **120 s or more** under the specified driving conditions. • B1486 — The brake switch off signal is input continuously for **150 s or more** even with **1.5 MPa or more** of brake fluid pressure.
POSSIBLE CAUSE	• B1483 — Malfunction of brake switch • B1484 — Short to power circuit in wiring harness between the brake switch and PCM terminal • B1486 — Short to ground circuit in wiring harness between the brake switch and PCM terminal — Open circuit in wiring harness between the brake switch and PCM terminal

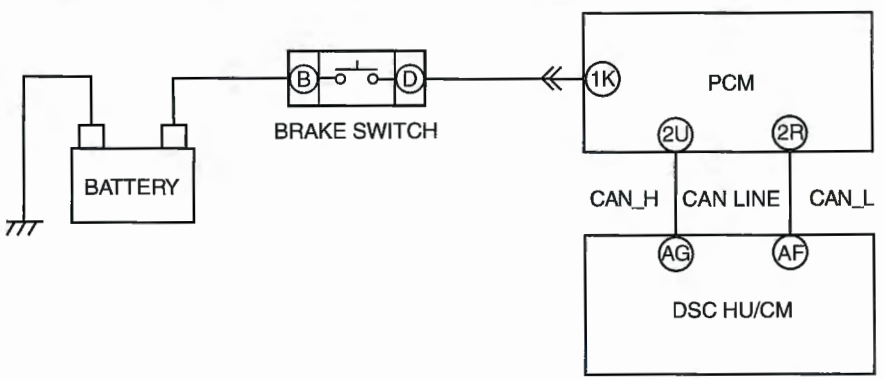

DSC HU/CM HARNESS-SIDE CONNECTOR

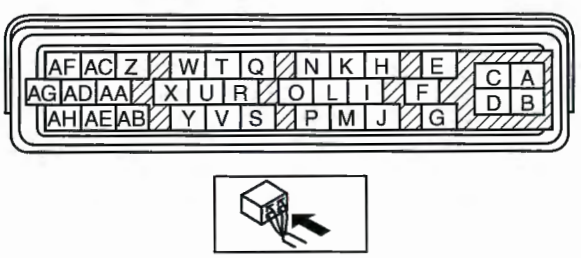

BRAKE SWITCH HARNESS-SIDE CONNECTOR

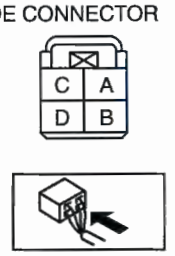

PCM HARNESS-SIDE CONNECTOR

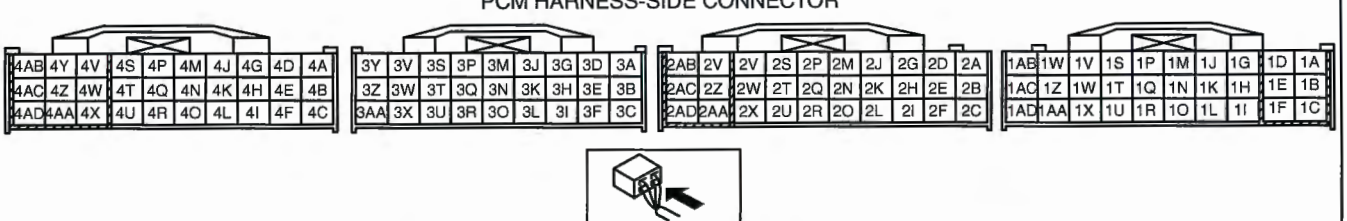

Diagnostic procedure

STEP	INSPECTION		ACTION
1	**VERIFY OPEN OR SHORT CIRCUIT IN BRAKE SWITCH SIGNAL** • Turn the ignition switch to the ON position. • Measure the voltage between the PCM connector terminal 1K and body ground when the brake pedal is depressed and released. **Voltage** **Brake pedal depressed: B+** **Brake pedal released:** **1 V or less**	Yes	Go to Step 5.
		No	If it is **B+** under any condition, then go to the next step. If it is **1 V or less** under any condition, then go to Step 3.
2	**INSPECT BRAKE SWITCH SIGNAL FOR SHORT TO POWER SUPPLY CIRCUIT** • Disconnect the brake switch connector. • Measure the voltage between the brake switch connector terminal D (vehicle harness-side) and body ground. • Is the voltage **1 V or less**?	Yes	Go to Step 4.
		No	Repair or replace the wiring harness between the PCM and brake switch, then go to Step 5.
3	**INSPECT BRAKE SWITCH SIGNAL FOR OPEN CIRCUIT** • Disconnect the PCM connectors. • Disconnect the brake switch connector. • Inspect continuity between the following PCM connector terminal 1K (vehicle harness-side) and brake switch terminal D. • Is there continuity?	Yes	Go to the next step.
		No	Repair or replace the wiring harness between the PCM and brake switch, then go to Step 5.
4	**INSPECT BRAKE SWITCH** • Inspect the brake switch. (See 04–11–9 BRAKE SWITCH INSPECTION.) • Is the brake switch normal?	Yes	Go to the next step.
		No	Replace the brake switch, then go to the next step. (See 04–11–8 BRAKE PEDAL REMOVAL/INSTALLATION.)
5	**VERIFY THAT THE SAME DTC IS NOT PRESENT** • Reconnect all disconnected connectors. • Clear the DTCs from the memory. (See 04–02B–3 Clearing DTCs Procedures.) • Are the same DTCs present?	Yes	Repeat the inspection from Step 1. If the malfunction recurs, replace the DSC HU/CM, then go to the next step. (See 04–15–7 DSC HU/CM REMOVAL/INSTALLATION.)
		No	Go to the next step.
6	**VERIFY THAT NO OTHER DTCS ARE PRESENT** • Are any other DTCs output?	Yes	Go to the applicable DTC inspection. (See 04–02B–4 DTC Table.)
		No	DTC troubleshooting completed.

DTC B1627 [DSC]

E6U040200000W22

DTC B1627	Reverse signal
DETECTION CONDITION	• Reverse signal is input for **10 s or more** while driving at a vehicle speed of **65 km/h {40 mph}**
POSSIBLE CAUSE	• Short to power circuit in harness between DSC HU/CM terminal Z and back-up light switch

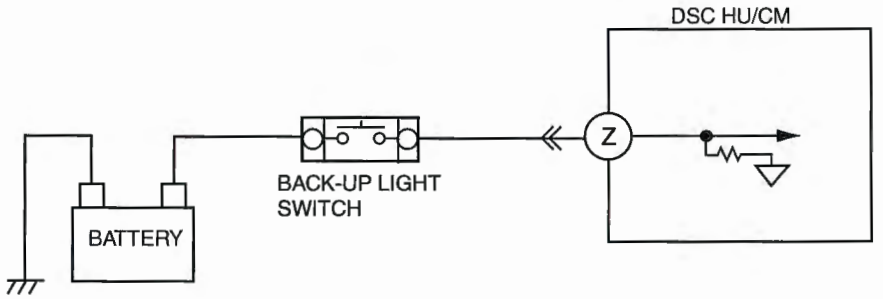

DSC HU/CM HARNESS-SIDE CONNECTOR

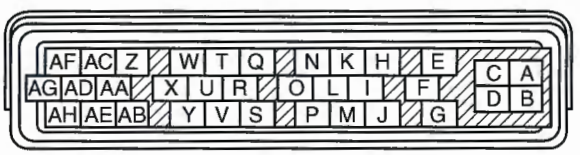

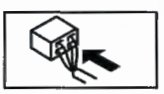

Diagnostic procedure

STEP	INSPECTION		ACTION
1	**INSPECT BACK-UP LIGHT SWITCH** • Inspect back-up light switch. (See 09–18–19 BACK-UP LIGHT SWITCH INSPECTION.) • Is it normal?	Yes	Go to next step.
		No	Replace back-up light switch, then go to next step. (See 09–18–19 BACK-UP LIGHT SWITCH REMOVAL/ INSTALLATION [L3 WITH TC].)
2	**INSPECT REVERSE SIGNAL CIRCUIT FOR SHORT TO POWER** • Shift select lever to neutral position. • Turn ignition key to ON. • Measure voltage between DSC HU/CM terminal Z and ground. • Is voltage **above 10 V**?	Yes	Go to next step.
		No	Replace back-up light switch, then go to next step. (See 09–18–19 BACK-UP LIGHT SWITCH REMOVAL/ INSTALLATION [L3 WITH TC].) Replace reverse signal circuit, then go to next step.
3	**VERIFY TROUBLESHOOTING COMPLETED** • Clear DTC from memory. (See 04–02B–3 Clearing DTCs Procedures.) • Is same DTC present?	Yes	Replace DSC HU/CM, then go to next step.
		No	Go to next step.
4	**VERIFY THAT NO OTHER DTCS ARE PRESENT** • Are any other DTCs output?	Yes	Go to the applicable DTC inspection. (See 04–02B–4 DTC Table.)
		No	DTC troubleshooting completed.

DTC B2477 [DSC]

E6U040200000W23

DTC B2477	Module configuration
DETECTION CONDITION	• Configuration write failure is detected
POSSIBLE CAUSE	• Module configuration procedure is not done properly.

Diagnostic procedure

STEP	INSPECTION		ACTION
1	INSPECT WHETHER DSC HU/CM IS CONFIGURED • Is DSC HU/CM configured?	Yes	Go to next step.
		No	Configure DSC HU/CM using WDS or equivalent. (See 04–15–9 DSC HU/CM CONFIGURATION.)
2	VERIFY TROUBLESHOOTING COMPLETED • Clear DTC from memory. (See 04–02B–3 Clearing DTCs Procedures.) • Is same DTC present?	Yes	Replace DSC HU/CM, then go to next step.
		No	Go to next step.
3	VERIFY THAT NO OTHER DTCS ARE PRESENT • Are any other DTCs output?	Yes	Go to the applicable DTC inspection. (See 04–02B–4 DTC Table.)
		No	DTC troubleshooting completed.

04–02B

DTC C1095, C1096 [DSC]

E6U040200000W24

DTC C1095, C1096	Motor relay, pump motor
DETECTION CONDITION	• C1095: — No motor monitor signal congruency is detected in relation to DSC HU/CM ON signal • C1096: — No motor monitor signal congruency is detected in relation to DSC HU/CM OFF signal — Motor monitor ON signal is not input after specified time when the motor signal is switched from ON to OFF by DSC HU/CM
POSSIBLE CAUSE	• Malfunction of fuse (ABS 60 A) • Open circuit in harness between DSC HU/CM terminal D and battery positive terminal • Open circuit in harness between DSC HU/CM terminal B and body ground • Open or short of motor relay and/or pump motor in DSC HU/CM • Stuck motor relay and/or pump motor in DSC HU/CM

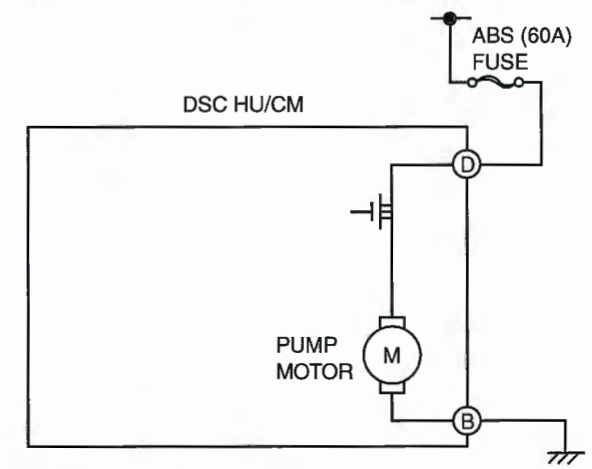

DSC HU/CM HARNESS-SIDE CONNECTOR

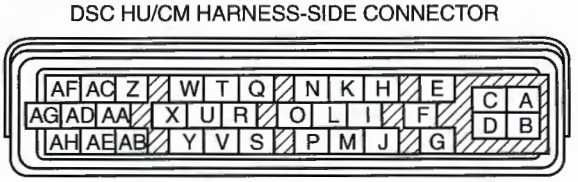

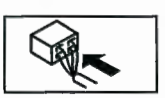

Diagnostic procedure

STEP	INSPECTION		ACTION
1	**VERIFY OTHER DTC HAS BEEN RECORDED** • If any of DTC C1186 and/or C1266 has also been stored?	Yes	Go to applicable DTC inspection.
		No	Go to next step.
2	**INSPECT ABS FUSE CONDITION** • Is ABS fuse (60 A) normal?	Yes	Go to next step.
		No	Replace fuse, then go to Step 6.
3	**INSPECT MOTOR RELAY POWER SUPPLY CIRCUIT FOR OPEN CIRCUIT** • Turn ignition key to OFF. • Disconnect DSC HU/CM connector. • Turn ignition key to ON (engine OFF). • Measure voltage between DSC HU/CM terminal D (harness side) and ground. • Is voltage **B+**?	Yes	Go to next step.
		No	Repair or replace harness for open circuit between battery positive terminal and DSC HU/CM terminal D, then go to Step 9.
4	**INSPECT PUMP MOTOR GROUND CIRCUIT FOR OPEN CIRCUIT** • Turn ignition key to OFF. • Inspect continuity between DSC HU/CM terminal B (harness side) and ground. • Is there continuity?	Yes	Go to next step.
		No	Repair or replace harness for open circuit between DSC HU/CM terminal B and ground, then go to Step 6.
5	**VERIFY PUMP MOTOR OPERATION** • Turn ignition key to OFF. • Connect all disconnected connectors. • Connect WDS or equivalent to DLC-2. • Turn ignition key to ON (engine OFF). • Access ABS_POWER and PMP_MOTOR active command modes using WDS or equivalent. • Does pump motor operate?	Yes	Go to next step.
		No	Repair DSC HU/CM, then go to next step.
6	**VERIFY TROUBLESHOOTING COMPLETED** • Clear DTC from memory. (See 04–02B–3 Clearing DTCs Procedures.) • Start engine and drive vehicle at **10 km/h {6.2 mph}** or above. • Gradually slow down and stop vehicle. • Is same DTC present?	Yes	Replace DSC HU/CM, then go to next step.
		No	Go to next step.
7	**VERIFY THAT NO OTHER DTCS ARE PRESENT** • Are any other DTCs output?	Yes	Go to the applicable DTC inspection. (See 04–02B–4 DTC Table.)
		No	DTC troubleshooting completed.

DTC C1119 [DSC]

E6U040200000W25

DTC C1119	Engine control system
DETECTION CONDITION	• Engine RPM information through CAN is out of specification • Throttle information through CAN is out of specification
POSSIBLE CAUSE	• Malfunction of PCM • Malfunction of CAN

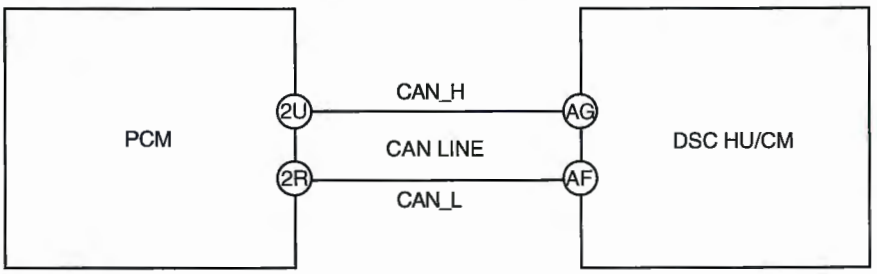

DSC HU/CU HARNESS-SIDE CONNECTOR

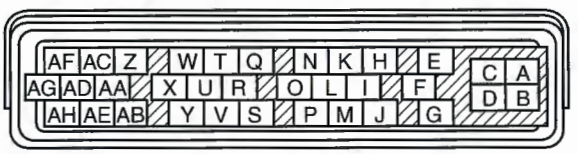

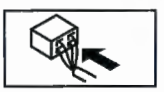

PCM HARNESS-SIDE CONNECTOR

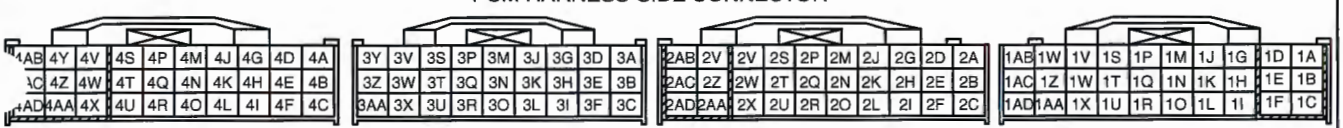



Diagnostic procedure

STEP	INSPECTION		ACTION
1	**INSPECT FOR PCM FOR DTCs** • Turn ignition key to OFF. • Connect WDS or equivalent to DLC-2 • Turn ignition key to ON (engine OFF). • Is DTC for engine control system obtained?	Yes	Follow inspection procedures for engine control system.
		No	Go to next step.
2	**MONITOR CAN SIGNAL** • Access PID RPM and TP using WDS or equivalent. • Are engine speed and throttle position within specification?	Yes	Go to next step.
		No	Follow inspection procedures for engine control system.
3	**VERIFY TROUBLESHOOTING COMPLETED** • Make sure to reconnect all disconnected connectors. • Clear DTC from memory. (See 04–02B–3 Clearing DTCs Procedures.) • Start engine. • Is the same DTC present?	Yes	Replace DSC HU/CM.
		No	DTC troubleshooting completed.

DTC C1125 [DSC]

E6U040200000W26

DTC C1125	Brake fluid level sensor
DETECTION CONDITION	• Brake fluid level remains low for **5 s or more**
POSSIBLE CAUSE	• Decrease in amount of brake fluid • Malfunction of brake fluid level sensor

Diagnostic procedure

STEP	INSPECTION		ACTION
1	**INSPECT FOR CAN FOR DTCs** • Is any of DTC U0073 and/or U0155 has also been stored?	Yes	Follow inspection procedures for CAN system. (See 09–02B–4 DTC TABLE [MULTIPLEX COMMUNICATION SYSTEM (L3 WITH TC)])
		No	Go to next step.
2	**INSPECT BRAKE FLUID LEVEL** • Inspect brake fluid level. • Is it normal?	Yes	Go to next step.
		No	Add brake fluid to specified level, then go to Step 3.
3	**INSPECT BRAKE FLUID LEVEL SENSOR** • Turn ignition key to OFF. • Disconnect brake fluid level sensor connector. • Measure resistance between brake fluid level sensor terminals. — Brake fluid level above MIN: resistance about **500 ohms** — Brake fluid level below MIN: resistance within **0—1 ohm** • Is it normal?	Yes	Go to next step.
		No	Repair brake fluid level sensor, then go to Next step.
4	**VERIFY TROUBLESHOOTING COMPLETED** • Make sure to reconnected all disconnected connectors. • Clear DTC from memory. (See 04–02B–3 Clearing DTCs Procedures.) • Is the same DTC present?	Yes	Replace DSC HU/CM, then go to next step.
		No	Go to next step.
5	**VERIFY THAT NO OTHER DTCS ARE PRESENT** • Are any other DTCs output?	Yes	Go to the applicable DTC inspection. (See 04–02B–4 DTC Table.)
		No	DTC troubleshooting completed.

DTC C1140 [DSC]

E6U040200000W27

DTC C1140	DSC HU/CM (pump)
DETECTION CONDITION	Right front and left rear wheels, or left front and right rear wheel-lock is detected during DSC operation.
POSSIBLE CAUSE	Stuck pump motor in DSC HU/CM

Diagnostic procedure

STEP	INSPECTION		ACTION
1	**INSPECT DSC HU/CM OPERATION** • Perform DSC HU/CM system inspection. (See 04–15–4 DSC SYSTEM INSPECTION.) • Is it normal?	Yes	Go to next step.
		No	Replace DSC HU/CM, then go to Step 4.
2	**INSPECT CONVENTIONAL BRAKE OPERATION** • Inspect brake fluid level. • Start engine. • Perform a road test to verify conventional vehicle braking performance. • Is there any concern.	Yes	Inspect conventional brake line, then go to Step 4.
		No	Go to next step.
3	**INSPECT REAR BRAKE DRAGGING** • Turn ignition key to OFF. • Jack-up vehicle and support it with safety stand. • Release parking brake. • Turn rear wheel by hand and inspect for rear brake drag. • Is rear brake dragging?	Yes	Repair parking brake system, then go to next step.
		No	Go to next step.
4	**VERIFY TROUBLESHOOTING COMPLETED** • Clear DTC from memory. (See 04–02B–3 Clearing DTCs Procedures.) • Start engine and drive vehicle at **10 km/h {6.2 mph}** or above at least one minute. • Gradually slow down vehicle and stop. • Is the same DTC present?	Yes	Replace DSC HU/CM, then go to next step.
		No	Go to next step.
5	**VERIFY THAT NO OTHER DTCS ARE PRESENT** • Are any other DTCs output?	Yes	Go to the applicable DTC inspection. (See 04–02B–4 DTC Table.)
		No	DTC troubleshooting completed.

DTC C1145, C1155, C1165, C1175 [DSC]

E6U040200000W28

DTC	C1145	RF ABS wheel-speed sensor
	C1155	LF ABS wheel-speed sensor
	C1165	RR ABS wheel-speed sensor
	C1175	LR ABS wheel-speed sensor
DETECTION CONDITION	• Abnormal input is detected.	
POSSIBLE CAUSE	• Open or short to ground circuit in harness between DSC HU/CM terminal and ABS wheel-speed sensor(s) terminal below — DSC HU/CM terminal M—RF ABS wheel-speed sensor terminal A — DSC HU/CM terminal I—RF ABS wheel-speed sensor terminal B — DSC HU/CM terminal F—LF ABS wheel-speed sensor terminal A — DSC HU/CM terminal J—LF ABS wheel-speed sensor terminal B — DSC HU/CM terminal K—RR ABS wheel-speed sensor terminal A — DSC HU/CM terminal H—RR ABS wheel-speed sensor terminal B — DSC HU/CM terminal Q—LR ABS wheel-speed sensor terminal A — DSC HU/CM terminal N—LR ABS wheel-speed sensor terminal B • Malfunction of ABS wheel-speed sensor(s)	

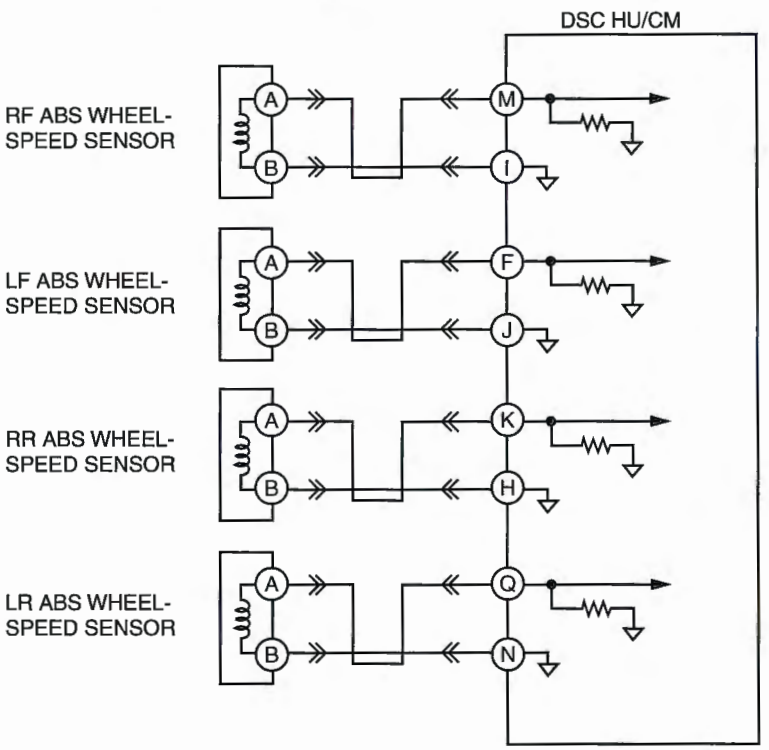

ABS WHEEL-SPEED SENSOR HARNESS-SIDE CONNECTOR

FRONT REAR



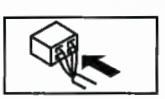

DSC HU/CM HARNESS-SIDE CONNECTOR

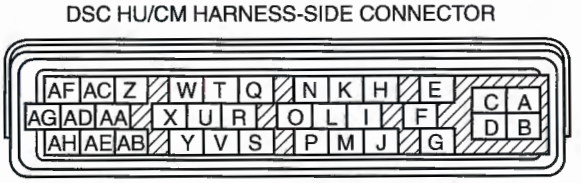

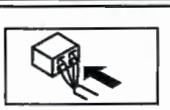

Diagnostic procedure

STEP	INSPECTION		ACTION
1	**INSPECT ABS WHEEL-SPEED SENSOR CIRCUIT FOR OPEN CIRCUIT** • Turn ignition key to OFF. • Disconnect DSC HU/CM connector. • Measure resistance between suspected sensor terminals of DSC HU/CM connector (harness side). — RF ABS wheel-speed sensor: M—I — LF ABS wheel-speed sensor: F—J — RR ABS wheel-speed sensor: K—H — LR ABS wheel-speed sensor: Q—N • Is resistance **within 1.3—1.7 kilohm**?	Yes	Go to next step.
		No	Go to Step 3.
2	**INSPECT ABS WHEEL-SPEED SENSOR CIRCUIT FOR SHORT TO GROUND** • Turn ignition key to OFF. • Inspect continuity between suspected sensor terminal(s) of DSC HU/CM connector (harness side) and ground(s). — RF ABS wheel-speed sensor (+): M — RF ABS wheel-speed sensor (–): I — LF ABS wheel-speed sensor (+): F — LF ABS wheel-speed sensor (–): J — RR ABS wheel-speed sensor (+): K — RR ABS wheel-speed sensor (–): H — LR ABS wheel-speed sensor (+): Q — LR ABS wheel-speed sensor (–): N • Is there continuity?	Yes	Repair or replace harness for short to ground circuit between DSC HU/CM and ABS wheel-speed sensor(s), then go to Step 5.
		No	Go to Step 5.
3	**INSPECT ABS WHEEL-SPEED SENSOR** • Turn ignition key to OFF. • Disconnect suspected sensor connector(s) and inspect resistance between sensor terminals (part side). • Is resistance **within 1.3—1.7 kilohm**?	Yes	Go to next step.
		No	Replace wheel-speed sensor, then go to Step 5.
4	**INSPECT DSC HU/CM TO ABS WHEEL-SPEED SENSOR CIRCUIT FOR OPEN CIRCUIT** • Inspect continuity between suspected sensor terminal(s) of DSC HU/CM connector (harness side) and ABS wheel-speed sensor connector. (vehicle harness side) — RF ABS wheel-speed sensor (+): M—A — RF ABS wheel-speed sensor (–): I—B — LF ABS wheel-speed sensor (+): F—A — LF ABS wheel-speed sensor (–): J—B — RR ABS wheel-speed sensor (+): K—A — RR ABS wheel-speed sensor (–): H—B — LR ABS wheel-speed sensor (+): Q—A — LR ABS wheel-speed sensor (–): N—B • Is there continuity?	Yes	Repair or replace poor connections of DSC HU/CM connector and/or ABS wheel-speed sensor connector(s), then go to next step.
		No	Repair or replace harness for open circuits between DSC HU/CM and ABS wheel-speed sensor(s), then go to next step.
5	**VERIFY TROUBLESHOOTING COMPLETED** • Make sure to reconnect all disconnected connectors. • Clear DTC from memory (See 04–02B–3 Clearing DTCs Procedures.) • Is the same DTC present?	Yes	Replace DSC HU/CM, then go to next step.
		No	Go to next step.
6	**VERIFY THAT NO OTHER DTCS ARE PRESENT** • Are any other DTCs output?	Yes	Go to the applicable DTC inspection. (See 04–02B–4 DTC Table.)
		No	DTC troubleshooting completed.

DTC C1148, C1158, C1168, C1178, C1233, C1234, C1235, C1236 [DSC]

E6U040200000W29

DTC	C1148, C1234 C1158, C1233 C1168, C1235 C1178, C1236	**RF ABS wheel-speed sensor/sensor rotor** **LF ABS wheel-speed sensor/sensor rotor** **RR ABS wheel-speed sensor/sensor rotor** **LR ABS wheel-speed sensor/sensor rotor**
DETECTION CONDITION	• C1148, C1158, C1168, C1178: — Abnormal sensor output is detected on any of four vehicle ABS wheels when the vehicle goes from start to a speed of **10 km/h {6.2 mph}** — Greater than specified amount of ABS demand occurs from front ABS wheel sensors when vehicle is started • C1234, C1233, C1235, C1236: — Abnormal sensor output due to chipping of sensor rotor teeth, etc. is detected — ABS control operates for **60 s or more**	
POSSIBLE CAUSE	• Short to ground circuit of ABS wheel-speed sensor(s) circuit • Malfunction of ABS wheel-speed sensor(s) • Damaged sensor rotor(s) • Incorrect clearance between ABS wheel-speed sensor and sensor rotor • Poor installation of ABS wheel speed sensor and/or sensor rotor (If the sensor rotor is installed twisted, it may cause output of abnormal wave form at high speeds) • DSC HU/CM internal damage (Solenoid valve malfunction, pump motor malfunction, or pipe clogging)	

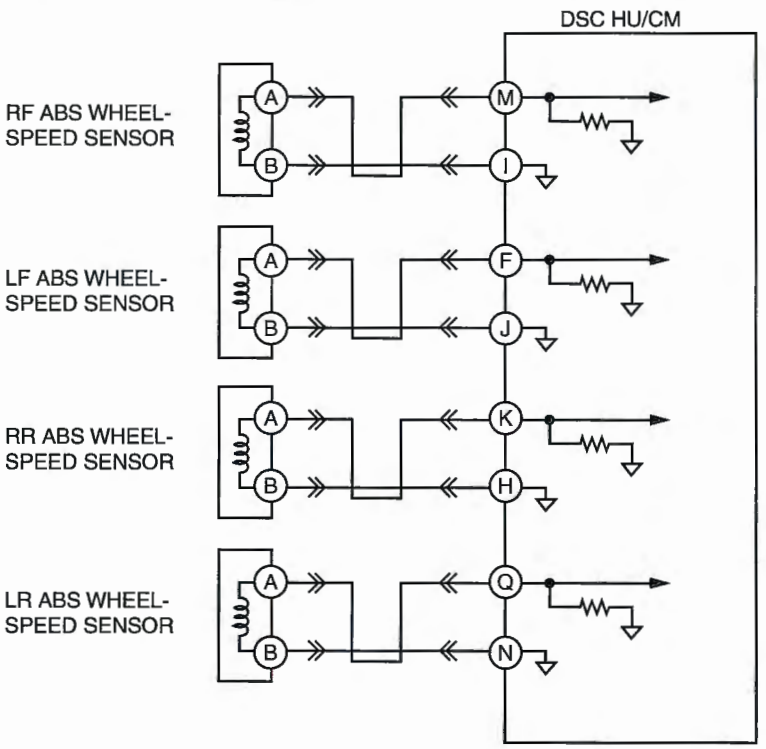

ABS WHEEL-SPEED SENSOR HARNESS-SIDE CONNECTOR

FRONT REAR

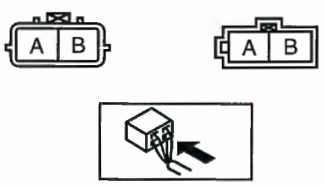

DSC HU/CM HARNESS-SIDE CONNECTOR

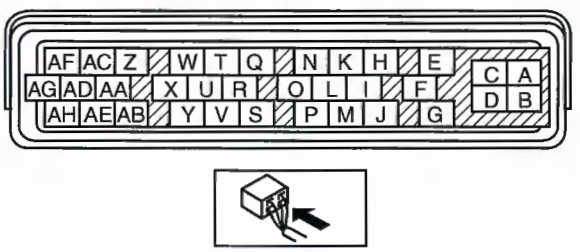

Diagnostic procedure

STEP	INSPECTION		ACTION
1	**VERIFY OTHER DTC HAS BEEN RECORDED** • Have DTCs related to solenoid valve, pump motor, or pump motor relay been stored?	Yes	Go to applicable DTC inspection.
		No	Go to next step.

STEP	INSPECTION		ACTION
2	**VERIFY IF CURRENT CONCERNED INPUT SIGNAL STATUS IS INTERMITTENT OR CONSTANT** • Turn ignition key to OFF. • Connect WDS or equivalent to DLC-2. • Start engine and drive vehicle. • Access LF_WSPD, LR_WSPD, RF_WSPD and RR_WSPD using WDS or equivalent • Do vehicle speeds correspond approximately to the four PIDs above?	Yes	Go to Step 8.
		No	If there is a difference in speed of four wheels: Go to next step. If any wheel speed is **0 km/h {0 mph}**: Go to Step 4.
3	**INSPECT ABS WHEEL-SPEED SENSOR OUTPUT PULSE** • Start engine and drive vehicle. • Inspect output voltage pattern using an oscilloscope. 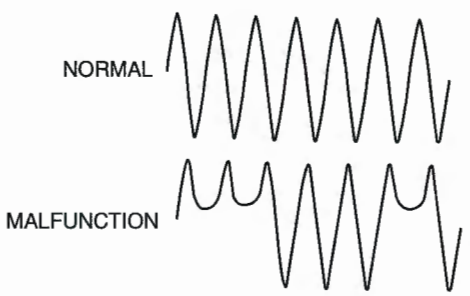 • Is output voltage pattern normal?	Yes	Go to Step 9.
		No	Go to Step 6.
4	**INSPECT ABS WHEEL-SPEED SENSOR CIRCUIT FOR SHORT TO GROUND** • Turn ignition key to OFF. • Disconnect DSC HU/CM and ABS wheel-speed sensor connectors. • Inspect continuity between suspected sensor terminal(s) of DSC HU/CM connector (harness side) and ground(s). — RF ABS wheel-speed sensor: M—ground — LF ABS wheel-speed sensor: F—ground — RR ABS wheel-speed sensor: K—ground — LR ABS wheel-speed sensor: Q—ground • Is there continuity?	Yes	Repair or replace harness for short to ground circuit between DSC HU/CM and ABS wheel-sped sensor, then go to Step 9.
		No	Go to next step.
5	**INSPECT ABS WHEEL-SPEED SENSOR** • Turn ignition key to OFF. • Disconnect suspected ABS wheel-speed sensor connector(s) and inspect resistance between ABS wheel-speed sensor terminal(s) (part side). • Is resistance **within 1.3—1.7 kilohm**?	Yes	Go to next step.
		No	Replace ABS wheel-speed sensor, then go to Step 9.
6	**INSPECT SENSOR ROTOR CLEARANCE** • Jack-up vehicle and support it with safety stands. • Remove suspected wheel(s). • Inspect clearance between ABS wheel-speed sensor and sensor rotor. • Is clearance **within 0.3—1.1 mm {0.012—0.043 in}**?	Yes	Go to next step.
		No	Replace ABS wheel-speed sensor(s), then go to Step 9.
7	**INSPECT SENSOR ROTOR FOR DAMAGE** • Jack-up vehicle and support it with safety stands. • Remove suspected wheel(s). • Visually inspect sensor rotor for missing, deformed and obstructed teeth. **Number of teeth: 44** • Is sensor rotor normal?	Yes	Go to next step.
		No	Replace sensor rotor, then go to Step 9.

STEP	INSPECTION		ACTION
8	**INSPECT DSC HU/CM OPERATION** • Perform DSC HU/CM system inspection. (See 04–15–4 DSC SYSTEM INSPECTION.) • Is it normal?	Yes	Go to next step.
		No	Replace DSC HU/CM, then go to next step.
9	**VERIFY TROUBLESHOOTING COMPLETED** • Make sure to reconnect all disconnected connectors. • Clear DTC from memory (See 04–02B–3 Clearing DTCs Procedures.) • Start engine and drive vehicle at **10 km/h {6.2 mph}** or above. • Gradually slow down vehicle and stop. • Is the same DTC present?	Yes	Replace DSC HU/CM, then go to next step.
		No	Go to next step.
10	**VERIFY THAT NO OTHER DTCS ARE PRESENT** • Are any other DTCs output?	Yes	Go to the applicable DTC inspection. (See 04–02B–4 DTC Table.)
		No	DTC troubleshooting completed.

DTC C1186, C1266 [DSC]

E6U040200000W30

DTC C1186, C1266	Fail-safe relay
DETECTION CONDITION	• C1186: — Fail-safe relay in DSC HU/CM stuck OFF when ignition switch is turned ON, fail-safe relay ON is commanded. • C1266: — Fail-safe relay in DSC HU/CM stuck ON when ignition switch is turned ON, fail-safe relay OFF is commanded.
POSSIBLE CAUSE	• Malfunction of fuse (ABS 60 A) • Open circuit in harness between DSC HU/CM terminal C and battery positive terminal • Open or short of fail-safe relay in DSC HU/CM • Stuck fail-safe relay in DSC HU/CM

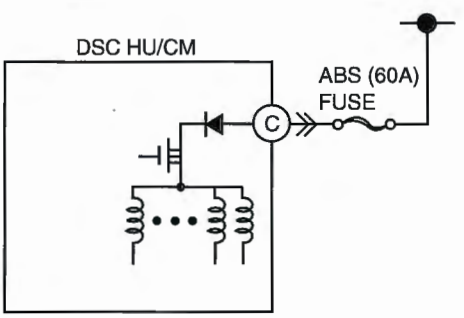

DSC HU/CM HARNESS-SIDE CONNECTOR

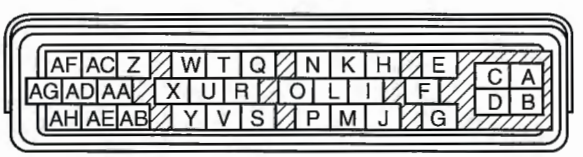

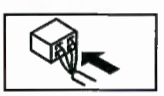

Diagnostic procedure

STEP	INSPECTION		ACTION
1	**INSPECT ABS FUSE CONDITION** • Is ABS fuse (60 A) normal?	Yes	Go to next step.
		No	Replace fuse, then go to Step 4.

STEP	INSPECTION		ACTION
2	**INSPECT FAIL-SAFE RELAY POWER SUPPLY CIRCUIT FOR OPEN CIRCUIT** • Turn ignition key to OFF. • Disconnect DSC HU/CM connector. • Turn ignition key to ON (engine OFF). • Measure voltage between DSC HU/CM terminal C (harness side) and ground. • Is voltage **B+**?	Yes	Go to next step.
		No	Repair or replace harness for open circuit between battery positive terminal and DSC HU/CM terminal C, then go to Step 4.
4	**VERIFY FAIL-SAFE OPERATION** • Turn ignition key to OFF. • Connect all disconnected connectors. • Connect WDS or equivalent to DLC-2. • Turn ignition key to ON (engine OFF). • Access ABS_POWER using WDS or equivalent. • Does fail-safe relay operate?	Yes	Go to next step.
		No	Replace DSC HU/CM, then go to next step.
5	**VERIFY TROUBLESHOOTING COMPLETED** • Clear DTC from memory. (See 04–02B–3 Clearing DTCs Procedures.) • Is same DTC present?	Yes	Replace DSC HU/CM, then go to next step.
		No	Go to next step.
6	**VERIFY THAT NO OTHER DTCS ARE PRESENT** • Are any other DTCs output?	Yes	Go to the applicable DTC inspection. (See 04–02B–4 DTC Table.)
		No	DTC troubleshooting completed.

DTC C1194, C1198, C1210, C1214, C1242, C1246, C1250, C1254, C1400, C1410, C1957, C1958 [DSC]

E6U040200000W31

DTC	**C1210**	**RF pressure reduction solenoid valve**
	C1214	**RF pressure retention solenoid valve**
	C1194	**LF pressure reduction solenoid valve**
	C1198	**LF pressure retention solenoid valve**
	C1246	**RR pressure reduction solenoid valve**
	C1254	**RR pressure retention solenoid valve**
	C1242	**LR pressure reduction solenoid valve**
	C1250	**LR pressure reduction solenoid valve**
	C1400	**RF traction switch solenoid valve**
	C1410	**LF traction switch solenoid valve**
	C1957	**RF stability control solenoid valve**
	C1958	**LF stability control solenoid valve**
DETECTION CONDITION	• Solenoid monitor signal does not track in response to solenoid On/Off command.	
POSSIBLE CAUSE	• Stuck solenoid valve in DSC HU/CM	

Diagnostic procedure

STEP	INSPECTION		ACTION
1	**VERIFY SOLENOID VALVE OPERATION** • Turn ignition key to OFF. • Connect WDS or equivalent to DLC-2. • Turn ignition key to ON (engine OFF). • Access solenoid valve(s) PIDs using WDS or equivalent. • Does solenoid valve operate?	Yes	Go to next step.
		No	Repair DSC HU/CM, then go to next step.
2	**VERIFY TROUBLESHOOTING COMPLETED** • Clear DTC from memory. (See 04–02B–3 Clearing DTCs Procedures.) • Start engine and drive vehicle at **10 km/h {6.2 mph}** or above. • Gradually slow down and stop vehicle. • Is the same DTC present?	Yes	Replace DSC HU/CM, then go to next step.
		No	Go to next step.
3	**VERIFY THAT NO OTHER DTCS ARE PRESENT** • Are any other DTCs output?	Yes	Go to the applicable DTC inspection. (See 04–02B–4 DTC Table.)
		No	DTC troubleshooting completed.

DTC C1280, C1730, C1951, C1952, C1959 [DSC]

E6U040200000W32

DTC C1280, C1730, C1951, C1952, C1959	Combined sensor
DETECTION CONDITION	• C1280: — Yaw rate sensor part 0-point correction value is **3 or more,** or **2 or less** — Output voltage value from yaw rate sensor part remains absolutely unchanged — Difference between estimated yaw rate value, calculated from ABS wheel speed-sensor, lateral-G sensor, steering angle sensor, and the value output from yaw rate sensor exceeds specification • C1730 — Voltage to combined sensor is detected out of range • C1952: — Voltage of yaw rate sensor monitor is detected at **3.5 V or less** • C1951: — Monitor voltage of lateral-G sensor is detected at **4.5 V or more**, or **0.5 V or less** — Monitor voltage difference of **1.25 V or more**, within 1 cycle is detected 8 times in **1 s** • C1959: — Lateral-G sensor part 0-point correction value is **3 or more,** or **2 or less** — Output voltage value from lateral-G sensor part remains absolutely unchanged — Difference between estimated lateral-G force calculated from steering angle sensor, and the value output from lateral-G sensor exceeds specification
POSSIBLE CAUSE	• Open circuit in harness between combined sensor terminal C and DSC HU/CM terminal P • Open, short to power, or short to ground circuit in harness between DSC HU/CM terminal T and combined sensor terminal D • Open circuit, short to power, or short to ground in harness between DSC HU/CM terminal O and combined sensor terminal B • Open circuit in harness between combined sensor terminal E and DSC HU/CM terminal Y • Open circuit, short to power, or short to ground in harness between DSC HU/CM terminal S and combined sensor terminal F • Malfunction of combined sensor

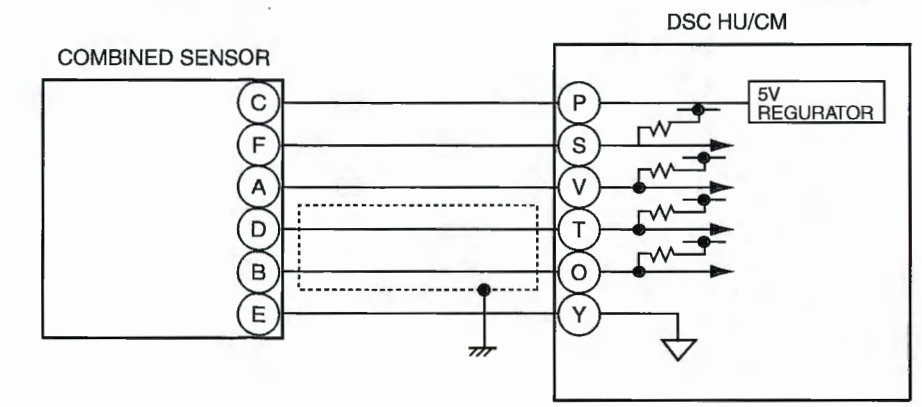

COMBINED SENSOR HARNESS-SIDE CONNECTOR



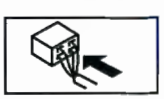

DSC HU/CM HARNESS-SIDE CONNECTOR

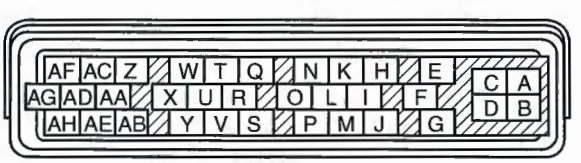

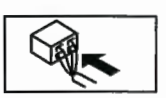

Diagnostic procedure

STEP	INSPECTION		ACTION
1	**INSPECT COMBINED SENSOR POWER SUPPLY CIRCUIT FOR OPEN CIRCUIT** • Turn ignition key to ON (engine OFF). • Measure voltage between combined sensor terminal C (harness side) of and ground. • Is voltage **4.5—5.5 V**?	Yes	Go to next step.
		No	Repair or replace harness for open circuit between yaw rate sensor terminal C and ignition switch, then go to Step 8.

STEP	INSPECTION		ACTION
2	**INSPECT COMBINED SENSOR GROUND CIRCUIT FOR OPEN CIRCUIT** • Turn ignition key to OFF. • Disconnect DSC HU/CM and yaw rate sensor connectors. • Inspect continuity between DSC HU/CM terminal Y (harness side) and combined sensor terminal E (harness side). • Is there continuity?	Yes	Go to next step.
		No	Repair or replace harness for open circuit between DSC HU/CM terminal Y and yaw rate sensor terminal E, then go to Step 8.
3	**INSPECT YAW RATE SENSOR PART SIGNAL CIRCUIT FOR OPEN CIRCUIT** • Inspect continuity between DSC HU/CM terminal T (harness side) and combined sensor terminal D (harness side). • Is there continuity?	Yes	Go to next step.
		No	Repair or replace harness for open circuit between DSC HU/CM terminal T and yaw rate sensor terminal D, then go to Step 8.
4	**INSPECT LATERAL-G SENSOR PART SIGNAL CIRCUIT FOR OPEN CIRCUIT** • Inspect continuity between DSC HU/CM terminal O (harness side) and combined sensor terminal B (harness side). • Is there continuity?	Yes	Go to next step.
		No	Repair or replace harness for open circuit between DSC HU/CM terminal O and combined sensor terminal B, then go to Step 8.
5	**INSPECT YAW RATE SENSOR PART SIGNAL CIRCUIT FOR SHORT TO GROUND** • Turn ignition key to OFF. • Inspect continuity between DSC HU/CM terminal T (harness side) and ground. • Is there continuity?	Yes	Repair or replace harness for short to ground circuit between DSC HU/CM terminal T and combined sensor terminal D, then go to Step 8.
		No	Go to next step.
6	**INSPECT LATERAL-G SENSOR PART SIGNAL CIRCUIT FOR SHORT TO GROUND** • Turn ignition key to OFF. • Inspect continuity between DSC HU/CM terminal O (harness side) and ground. • Is there continuity?	Yes	Repair or replace harness for short to ground circuit between DSC HU/CM terminal O and combined sensor terminal B, then go to Step 8.
		No	Go to next step.
7	**INSPECT DIAGNOSIS SIGNAL CIRCUIT FOR SHORT FOR OPEN** • Turn ignition key to OFF. • Inspect continuity between DSC HU/CM terminal S (harness side) and combined sensor terminal F. • Is there continuity?	Yes	Repair or replace harness for open circuit between DSC HU/CM terminal S and combined sensor terminal F, then go to Step 8.
		No	Go to next step.
8	**INSPECT DIAGNOSIS SIGNAL CIRCUIT FOR SHORT TO GROUND** • Turn ignition key to OFF. • Inspect continuity between DSC HU/CM terminal S (harness side) and combined sensor terminal F. • Is there continuity?	Yes	Repair or replace harness for short to ground circuit between DSC HU/CM terminal S and combined sensor terminal F, then go to Step 8.
		No	Go to next step.
9	**INSPECT COMBINED SENSOR** • Inspect combined sensor. (See 04–15–12 COMBINED SENSOR INSPECTION.) • Is it normal?	Yes	Go to next step.
		No	Replace combined sensor, then go to next step.
10	**VERIFY TROUBLESHOOTING COMPLETED** • Clear DTC from memory. (See 04–02B–3 Clearing DTCs Procedures.) • Is the same DTC present?	Yes	Replace DSC HU/CM, then go to next step.
		No	Go to next step.
11	**VERIFY THAT NO OTHER DTCS ARE PRESENT** • Are any other DTCs output?	Yes	Go to the applicable DTC inspection. (See 04–02B–4 DTC Table.)
		No	DTC troubleshooting completed.

DTC C1414 [DSC]

E6U040200000W33

DTC C1414	DSC HU/CM
DETECTION CONDITION	• Detection of situation where vehicle-type or drive system input signal and DSC HU/CM information remains incongruent through CAN information
POSSIBLE CAUSE	• Mismatched installation of DSC HU/CM

Diagnostic procedure

STEP	INSPECTION		ACTION
1	**INSPECT DSC HU/CM FOR MISMATCHED INSTALLATION** • Verify DSC HU/CM part number • Has a DSC HU/CM with the correct part number been installed?	Yes	Go to next step.
		No	Replace with correct DSC HU/CM part number, then go to Step 7.
2	**INSPECT RELATED WIRING HARNESS FOR MISMATCHED INSTALLATION** • Verify wiring harness part number • Has a wiring harness with the correct part number been installed?	Yes	Go to next step.
		No	Replace with correct DSC HU/CM part number, then go to next Step.
3	**CONFIGURE DSC HU/CM** • Can DSC HU/CM configure properly?	Yes	Go to next step.
		No	Replace DSC HU/CM
4	**VERIFY TROUBLESHOOTING COMPLETED** • Make sure to reconnected all disconnect connectors. • Clear DTC from memory. (See 04–02B–3 Clearing DTCs Procedures.) • Is the same DTC present?	Yes	Replace DSC HU/CM, then go to next step.
		No	Go to next step.
5	**VERIFY THAT NO OTHER DTCS ARE PRESENT** • Are any other DTCs output?	Yes	Go to the applicable DTC inspection. (See 04–02B–4 DTC Table.)
		No	DTC troubleshooting completed.

DTC C1507, C1508 [DSC]

E6U040200000W34

DTC C1507 C1508	DSC control
DETECTION CONDITION	• C1507: — Brake TCS or DSC controls continue operation for **20 s or more** • C1508: — Engine TCS control continues operation for **60 s or more**
POSSIBLE CAUSE	• System is normal For protection of solenoid valves in the DSC HU/CM, or protection of the engine, sustained and continual control of DSC and TCS is inhibited

Diagnostic procedure

STEP	INSPECTION		ACTION
1	**VERIFY CURRENT STATUS OF MALFUNCTION** • Clear DTC from memory. (See 04–02B–3 Clearing DTCs Procedures) • Start engine and drive vehicle at **10 km/h {6.2 mph}** or above. • Is same DTC present?	Yes	Replace DSC HU/CM, then go to next step.
		No	Inspect intermittent concern using the same procedure as engine control system.
2	**VERIFY THAT NO OTHER DTCS ARE PRESENT** • Are any other DTCs output?	Yes	Go to the applicable DTC inspection. (See 04–02B–4 DTC Table.)
		No	DTC troubleshooting completed.

DTC C1510, C1511, C1512, C1513 [DSC]

E6U040200000W35

DTC	C1510	RF solenoid valve, motor or RF ABS wheel-speed sensor/sensor rotor.
	C1511	LF solenoid valve, motor or LF ABS wheel-speed sensor/sensor rotor.
	C1512	RR solenoid valve, motor or RR ABS wheel-speed sensor/sensor rotor.
	C1513	LR solenoid valve, motor or LR ABS wheel-speed sensor/sensor rotor.
DETECTION CONDITION	• Wheel lock is detected during ABS operation (pressure reduction inoperative). • Pressure reduction on a single wheel continues for **20 s or more**	
POSSIBLE CAUSE	• Malfunction of solenoid valve in DSC HU/CM • Malfunction of ABS wheel-speed sensor • Damaged sensor rotor • Stuck pump motor in DSC HU/CM	

Diagnostic procedure

STEP	INSPECTION		ACTION
1	**VERIFY OTHER DTC HAS BEEN RECORDED** • Has any ABS wheel speed sensor, sensor rotor, solenoid valve, pump motor, or motor relay related DTC been output?	Yes	Go to applicable DTC inspection.
		No	Go to next step.
2	**INSPECT DSC HU/CM OPERATION** • Perform DSC HU/CM system inspection. (See 04–15–4 DSC SYSTEM INSPECTION.) • Is it normal?	Yes	Go to next step.
		No	Replace DSC HU/CM, then go to next step.
3	**VERIFY CURRENT STATUS OF MALFUNCTION** • Clear DTC from memory. (See 04–02B–3 Clearing DTCs Procedures.) • Start engine and drive vehicle at **10 km/h {6.2 mph}** or above at least one minute. • Gradually slow down and stop vehicle. • Is the same DTC present?	Yes	Replace DSC HU/CM, then go to next step.
		No	Go to next step.
4	**VERIFY THAT NO OTHER DTCS ARE PRESENT** • Are any other DTCs output?	Yes	Go to the applicable DTC inspection. (See 04–02B–4 DTC Table.)
		No	DTC troubleshooting completed.

DTC C1949, C1950 [DSC]

E6U040200000W36

DTC C1949, C1950	Combined sensor (forward G-sensor)
DETECTION CONDITION	• C1949: — Monitor voltage of forward-G sensor is detected at **4.5 V or more**, or **0.5 V or less** — Monitor voltage difference of **0.4 V or more** within 1 cycle is detected 8 times in **1 s** • C1950: — Forward-G sensor 0-point correction value is default or more — Output voltage value from G sensor remains absolutely unchanged — Difference between estimated G-force calculated from 2 channels exceeds specification
POSSIBLE CAUSE	• Open circuit in harness between combined sensor terminal C and DSC HU/CM terminal P • Open circuit, short to power, or short to ground in harness between DSC HU/CM terminal V and combined sensor terminal A • Open circuit, short to power, or short to ground in harness between DSC HU/CM terminal S and combined sensor terminal F • Open circuit in harness between combined sensor terminal E and DSC HU/CM terminal Y • Malfunction of combined sensor

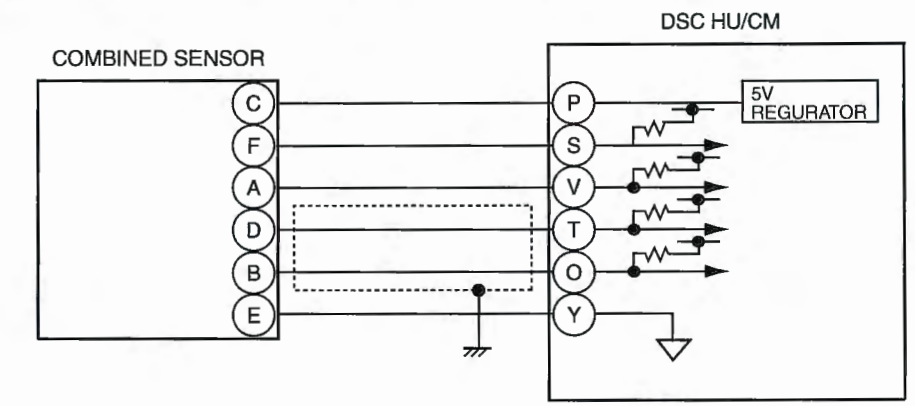

COMBINED SENSOR HARNESS-SIDE CONNECTOR



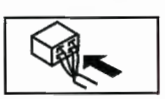

DSC HU/CM HARNESS-SIDE CONNECTOR

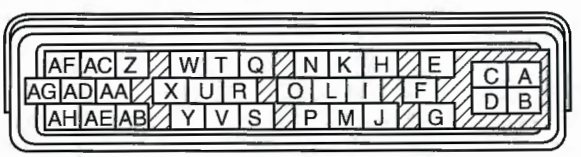

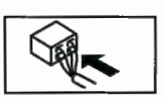

Diagnostic procedure

STEP	INSPECTION		ACTION
1	**INSPECT COMBINED SENSOR POWER SUPPLY CIRCUIT FOR OPEN CIRCUIT** • Turn ignition key to ON (engine OFF). • Measure voltage between combined sensor terminal C (harness side) and ground. • Is voltage **4.5—5.5 V**?	Yes	Go to next step.
		No	Repair or replace harness for open circuit between combined sensor terminal C and ignition switch, then go to Step 8.
2	**INSPECT COMBINED SENSOR GROUND CIRCUIT FOR OPEN CIRCUIT** • Turn ignition key to OFF. • Disconnect DSC HU/CM and combined sensor connectors. • Inspect continuity between DSC HU/CM terminal Y (harness side) and combined sensor terminal E (harness side). • Is there continuity?	Yes	Go to next step.
		No	Repair or replace harness for open circuit between DSC HU/CM terminal Y and combined sensor terminal E, then go to Step 8.
3	**INSPECT FORWARD-G SENSOR PART SIGNAL CIRCUIT FOR OPEN CIRCUIT** • Inspect continuity between DSC HU/CM terminal V (harness side) and combined sensor terminal A (harness side). • Is there continuity?	Yes	Go to next step.
		No	Repair or replace harness for open circuit between DSC HU/CM terminal V and combined sensor terminal A, then go to Step 8.
4	**INSPECT FORWARD-G SENSOR PART SIGNAL CIRCUIT FOR SHORT TO GROUND** • Turn ignition key to OFF. • Inspect continuity between DSC HU/CM terminal V (harness side) and ground. • Is there continuity?	Yes	Repair or replace harness for short to ground circuit between DSC HU/CM terminal V and combined sensor terminal A, then go to Step 8.
		No	Go to next step.
5	**INSPECT DIAGNOSIS SIGNAL CIRCUIT FOR SHORT FOR OPEN CIRCUIT** • Turn ignition key to OFF. • Inspect continuity between DSC HU/CM terminal S (harness side) and combined sensor terminal F. • Is there continuity?	Yes	Repair or replace harness for open circuit between DSC HU/CM terminal S and combined sensor terminal F, then go to Step 8.
		No	Go to next step.
6	**INSPECT DIAGNOSIS SIGNAL CIRCUIT FOR SHORT TO GROUND** • Turn ignition key to OFF. • Inspect continuity between DSC HU/CM terminal S (harness side) and ground. • Is there continuity?	Yes	Repair or replace harness for short to ground circuit between DSC HU/CM terminal S and combined sensor terminal F, then go to Step 8.
		No	Go to next step.
7	**INSPECT COMBINED SENSOR** • Inspect combined sensor. • Is it normal?	Yes	Go to next step.
		No	Replace combined sensor, then go to next step.
8	**VERIFY TROUBLESHOOTING COMPLETED** • Clear DTC from memory. (See 04–02B–3 Clearing DTCs Procedures.) • Is same DTC present?	Yes	Replace DSC HU/CM, then go to next step.
		No	Go to next step.
9	**VERIFY THAT NO OTHER DTCS ARE PRESENT** • Are any other DTCs output?	Yes	Go to the applicable DTC inspection. (See 04–02B–4 DTC Table.)
		No	DTC troubleshooting completed.

DTC C1953, C1954 [DSC]

E6U040200000W37

DTC C1953, C1954	Brake fluid pressure sensor
DETECTION CONDITION	• C1953: — Monitor voltage of the brake fluid pressure sensor is detected at **4.5 V or more**, or **0.5 V or less** — Monitor voltage difference of **0.4 V or more** within 1 cycle is detected 8 times in **1 s** • C1954: — Brake fluid pressure sensor 0-point correction value is **0.3 V or less**, or **0.9 V or more** — Output voltage value from brake fluid pressure sensor does not increase **above 0.06 V** — Difference between estimated brake pressure value and output value of brake fluid pressure sensor exceeds specification
POSSIBLE CAUSE	• Malfunction of brake fluid pressure sensor

Diagnostic procedure

STEP	INSPECTION		ACTION
1	**INSPECT BRAKE FLUID PRESSURE SENSOR** • Inspect PID/DATA in brake fluid pressure sensor. • Inspect MCYLIP item using WDS or equivalent. • Is pressure value change between **0—22.5 MPa** when brake pedal is pressed?	Yes	Go to next step.
		No	Replace DSC HU/CM, then go to next step.
2	**VERIFY TROUBLESHOOTING COMPLETED** • Clear DTC from memory. (See 04–02B–3 Clearing DTCs Procedures.) • Is the same DTC present?	Yes	Replace DSC HU/CM, then go to next step.
		No	Go to next step.
3	**VERIFY THAT NO OTHER DTCS ARE PRESENT** • Are any other DTCs output?	Yes	Go to the applicable DTC inspection. (See 04–02B–4 DTC Table.)
		No	DTC troubleshooting completed.

DTC C1955, C1956 [DSC]

E6U040200000W38

DTC C1955, C1956	Steering angle sensor
DETECTION CONDITION	• C1955: — Output voltages from steering angle sensors 1 and 2 are not at **1 V or less**, or not at **3.25 V or more** • C1956: — Sensor 1 voltage remains unchanged, sensor 2 voltage changes — Sensor 2 voltage remains unchanged, sensor 1 voltage changes — When steering wheel is turned in specified direction, neutral position is detected even when rotated at **18 degrees or more**
POSSIBLE CAUSE	• Open circuit in harness between steering angle sensor terminal A and ignition switch • Open, short to power, or short to ground circuit in harness between DSC HU/CM terminal X and steering angle sensor terminal B • Open, short to power, or short to ground circuit in harness between DSC HU/CM terminal W and steering angle sensor terminal C • Open, short to power, or short to ground circuit in harness between DSC HU/CM terminal U and steering angle sensor terminal D • Open circuit in harness between DSC HU/CM terminal Rand steering angle sensor terminal F • Malfunction of steering angle sensor

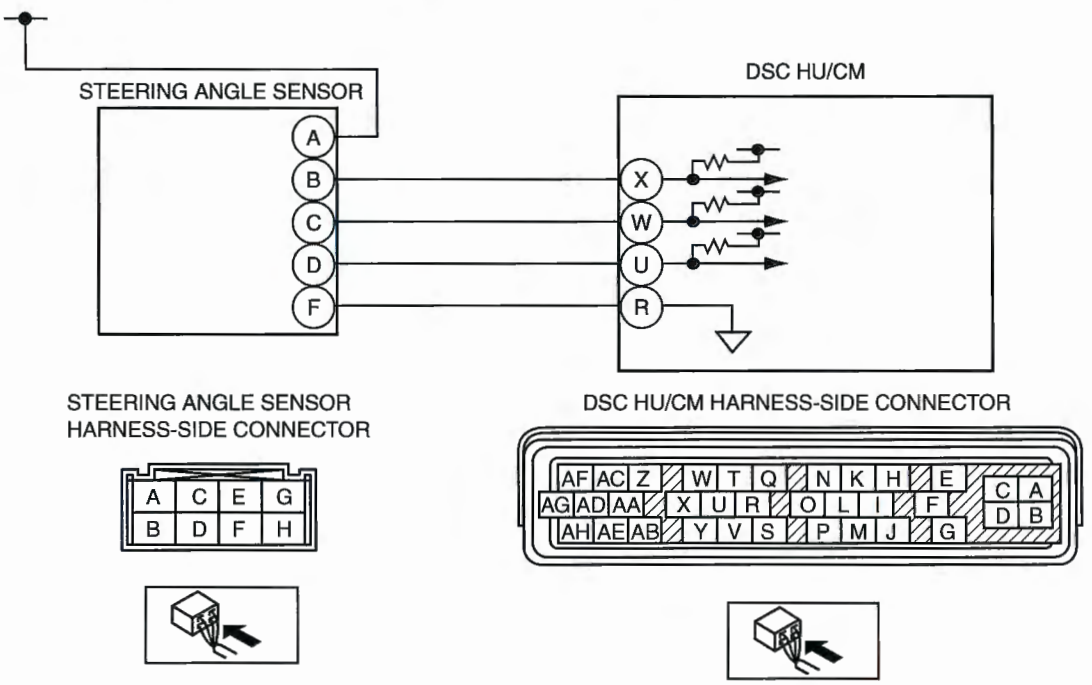

04–02E

Diagnostic procedure

STEP	INSPECTION		ACTION
1	**INSPECT STEERING ANGLE SENSOR POWER SUPPLY CIRCUIT FOR OPEN CIRCUIT** • Turn ignition key to ON (engine OFF). • Measure voltage between steering angle sensor terminal A (harness side) and ground. • Is voltage **B+**?	Yes	Go to next step.
		No	Repair or replace harness for open circuit between steering angle sensor terminal A and ignition switch, then go to Step 7.
2	**INSPECT STEERING ANGLE SENSOR GROUND CIRCUIT FOR OPEN CIRCUIT** • Turn ignition key to OFF. • Disconnect DSC HU/CM and steering angle sensor connectors. • Inspect continuity between DSC HU/CM terminal R (harness side) and steering angle sensor terminal F (harness side). • Is there continuity?	Yes	Go to next step.
		No	Repair or replace harness for open circuit between DSC HU/CM terminal R and steering angle sensor terminal F, then go to Step 7.

STEP	INSPECTION		ACTION
3	**INSPECT STEERING ANGLE SENSOR SIGNAL CIRCUIT FOR OPEN CIRCUIT** • Inspect continuity between DSC HU/CM terminal (harness side) and steering angle sensor terminal (harness side) below. — Sensor 1: DSC HU/CM X and steering angle sensor B — Sensor 2: DSC HU/CM W and steering sensor C — Neutral: DSC HU/CM U and steering angle sensor D • Is there continuity?	Yes	Go to next step.
		No	Repair or replace harness for open circuit between DSC HU/CM terminal and steering angle sensor terminal, then go to Step 7.
4	**INSPECT STEERING ANGLE SENSOR SIGNAL CIRCUIT FOR SHORT TO POWER** • Turn ignition key to ON (engine OFF). • Measure voltage between DSC HU/CM terminal (harness side) and ground below. — Sensor 1: DSC HU/CM X and ground — Sensor 2: DSC HU/CM W and ground — Neutral: DSC HU/CM U and ground • Is voltage **B+**?	Yes	Repair or replace harness for short to power circuit between DSC HU/CM terminal and steering angle sensor terminal, then go to Step 7.
		No	Go to next step.
5	**INSPECT STEERING ANGLE SENSOR SIGNAL CIRCUIT FOR SHORT TO GROUND** • Turn ignition key to OFF. • Inspect continuity between DSC HU/CM terminal (harness side) and ground below. — Sensor 1: DSC HU/CM X and ground — Sensor 2: DSC HU/CM W and ground — Neutral: DSC HU/CM U and ground • Is there continuity?	Yes	Repair or replace harness for short to ground circuit between DSC HU/CM terminal and steering angle sensor terminal, then go to Step 7.
		No	Go to next step.
6	**INSPECT STEERING ANGLE SENSOR** • Inspect steering angle sensor. (See 09–18–20 STEERING ANGLE SENSOR INSPECTION.) • Is it normal?	Yes	Go to next step.
		No	Replace steering angle sensor, then go to next step.
7	**VERIFY TROUBLESHOOTING COMPLETED** • Clear DTC from memory. (See 04–02B–3 Clearing DTCs Procedures.) • Is the same DTC present?	Yes	Replace DSC HU/CM, then go to next step.
		No	Go to next step.
8	**VERIFY THAT NO OTHER DTCS ARE PRESENT** • Are any other DTCs output?	Yes	Go to the applicable DTC inspection. (See 04–02B–4 DTC Table.)
		No	DTC troubleshooting completed.

DTC U2511 [DSC]

E6U040200000W39

DTC U2511	Abnormal message from AWD control module
DETECTION CONDITION	• Detects that the communication signals from AWD control module is abnormal.
POSSIBLE CAUSE	• AWD control module signals have communication error.

Diagnostic procedure

- Follow inspection procedures for CAN. (See 09–02B–2 MULTIPLEX COMMUNICATION SYSTEM [L3 WITH TC].)

04–03A SYMPTOM TROUBLESHOOTING [ABS/TCS]

ABS/TCS SYSTEM
WIRING DIAGRAM 04–03A–2
FOREWORD [ABS/TCS]..... 04–03A–2
PRECAUTION [ABS/TCS] 04–03A–3
Intermittent Concern
Troubleshooting 04–03A–4
SYMPTOM TROUBLESHOOTING
[ABS/TCS]..... 04–03A–6
NO.1 ABS WARNING LIGHT,
BRAKE SYSTEM WARNING LIGHT,
TCS OFF LIGHT, TCS INDICATOR
LIGHT DO NOT ILLUMINATE WITH
IGNITION KEY TO ON [ABS/TCS].... 04–03A–8
NO.2 NEITHER ABS WARNING LIGHT
NOR BRAKE SYSTEM WARNING
LIGHT ILLUMINATE WITH IGNITION
KEY TO ON [ABS/TCS] 04–03A–9
NO.3 ABS WARNING LIGHT DOES
NOT ILLUMINATE WITH IGNITION
KEY TO ON [ABS/TCS] 04–03A–10
NO.4 BRAKE SYSTEM WARNING
LIGHT DOES NOT ILLUMINATE WITH
IGNITION KEY TO ON [ABS/TCS].... 04–03A–10
NO.5 TCS OFF LIGHT AND TCS
INDICATOR LIGHT DO NOT
ILLUMINATE WITH IGNITION KEY
TO ON [ABS/TCS] 04–03A–11
NO.6 BOTH ABS WARNING LIGHT AND
BRAKE SYSTEM WARNING LIGHT
STAY ON MORE THAN 4 S WITH
IGNITION KEY TO ON [ABS/TCS] 04–03A–13
NO.7 ABS WARNING LIGHT STAYS ON
MORE THAN 4 S WITH IGNITION KEY
TO ON [ABS/TCS] 04–03A–14
NO.8 BRAKE SYSTEM WARNING LIGHT
STAYS ON MORE THAN 4 S WITH
IGNITION KEY TO ON [ABS/TCS] 04–03A–16
NO.9 TCS OFF LIGHT STAYS ON MORE
THAN 4 S WITH IGNITION KEY TO ON
[ABS/TCS] 04–03A–18
NO.10 TCS DOES NOT WORK
CORRECTLY [ABS/TCS].....04–03A–19
NO.11 THERE IS A MALFUNCTION IN
THE SYSTEM EVEN THOUGH ABS
WARNING LIGHT, BRAKE SYSTEM
WARNING LIGHT, TCS OFF LIGHT,
TCS INDICATOR LIGHT DO NOT
ILLUMINATE [ABS/TCS] 04–03A–19

ABS/TCS SYSTEM WIRING DIAGRAM

E6U040367650W01

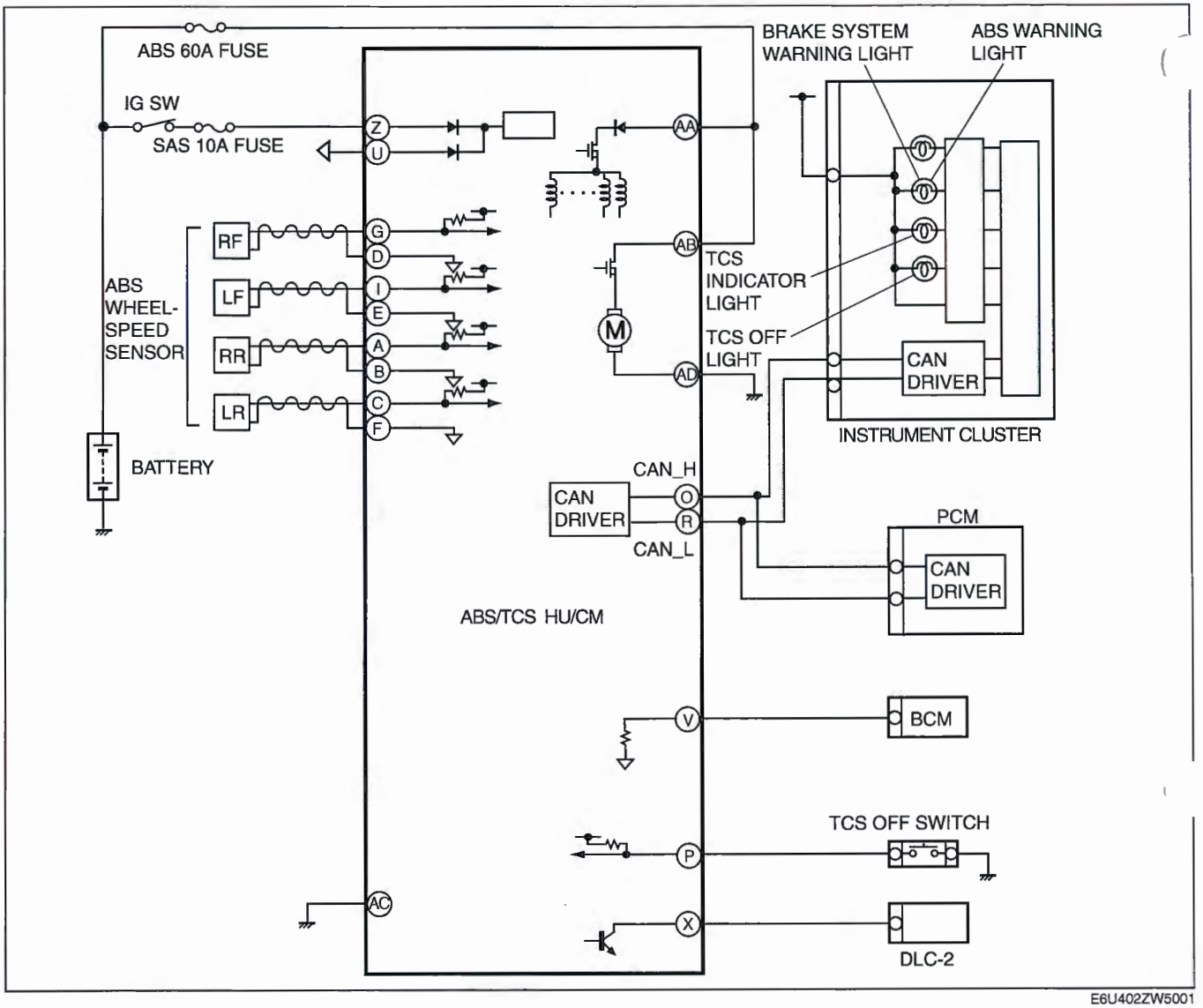

E6U402ZW5001

FOREWORD [ABS/TCS]

E6U040367650W02

- Before performing the steps in Symptom Troubleshooting, perform the On-board Diagnostic Inspection. To check the DTC, follow the DTC Inspection steps.

PRECAUTION [ABS/TCS]

E6U040367650W03

1. Any one or a combination of the ABS warning light, BRAKE system warning light, TCS indicator light, and TCS OFF light illuminate even when the system is normal.

Warning lights that may illuminate and/or flash	Cases in which the light may illuminate	Conditions in which the light will go out	ABS, EBD, TCS control
Any or all the following light (s) illuminate: • ABS warning light • BRAKE system warning light (*1)	Under any of the following conditions: • When the front wheels are jacked up, stuck, or placed on a chassis roller, and only the front wheel ABS wheel speed sensors are spun for **more than 60 s**.	After turning ignition switch to OFF, vehicle is driven at speed **greater than 10 km/h {6.2 mph}** and normal operation is confirmed.	• ABS: Cuts control. • EBD: 1. Cuts control, in cases where the light may illuminate, only when ABS/TCS HU/CM detects that a wheel speed sensor determines that more than the two rear wheels are malfunctioning. 2. Operates control, if wheel speed sensor determines that more than 3 wheels are functioning correctly.
	Parking brake is not fully released while driving.		
	Brake drag.		
	Sudden acceleration/ deceleration.		
	Left/right or front/rear tires are different. (Size, radius, tire pressure, or wear is other than that listed on tire label.)		
All the following lights illuminate: • ABS warning light • BRAKE system warning light	Battery voltage at ABS/TCS HU/CM ignition terminal Z drops **below about 9 to 10 V.** (*2)	Battery voltage rises **above about 10 V.** (Only BRAKE system warning light goes out.)	ABS: Operates control. EBD: Operates control.

*1 : The light will illuminate only when ABS/TCS HU/CM detects that a rear wheel's speed sensor is malfunctioning.

*2 : If battery voltage drops **below 9 V** while vehicle speed is **greater than 6 km/h {3.7mph}**, ABS/TCS HU/CM records DTC B1318.

Warning lights that may illuminate and/or flash	Cases in which the light may illuminate	Conditions in which the light will go out	ABS, EBD, TCS control
The following light illuminates: • TCS OFF light	When the engine coolant temperature is below **0 °C {32 °F}**. (*1)	When engine is started and engine coolant temperature rises **above 0 °C {32 °F}**.	ABS: Cuts control. EBD: Cuts control. TCS: 1. If TCS is operating, cuts control after gradually released TCS control value. 2. If TCS is not operating, cuts control.
All the following lights flash: • ABS warning light • BRAKE system warning light • TCS OFF light	When confirming DTC, PID/ DATA and ACTIVE COMMAND MODES item using the WDS or equivalent.	When ABS ON-BOARD DIAGNOSTIC SYSTEM is released.	ABS: Cuts control. EBD: Cuts control. TCS: Cuts control.
The following light illuminates: • TCS OFF light	For **1 s** after starting the engine.	**More than 1 s** after starting the engine.	ABS: Cuts control. EBD: Cuts control. TCS: Cuts control.
Warning lights that may illuminate and/or flash.	Cases in which the light may illuminate.	Conditions in which the light will go out.	ABS, EBD, TCS control.

*1 : DTC U2021 for past malfunction is not recorded in the ABS/TCS HU/CM. DTC U2021 for present malfunction displayed, but goes out when engine coolant temperature rises **above 0° C {32° F}.**

2. Precautions during servicing of ABS/TCS.
   The ABS/TCS is composed of electrical and mechanical parts. It is necessary to categorize malfunctions as being either electrical or hydraulic when performing troubleshooting.
   (1) Malfunctions in electrical system
   - The ABS/TCS HU/CM has an on-board diagnostic function. With this function, any one or a combination of the ABS warning light, BRAKE system warning light, TCS indicator light, and TCS OFF light will come on when there is a problem in the electrical system. Also, past and present malfunctions are recorded in the ABS/TCS HU/CM. This function can find malfunctions that do not occur during periodic inspections. Connect the WDS or equivalent to the DLC-2. Stored malfunctions will be displayed in the order of occurrence. To find out the causes of ABS/TCS malfunctions, use these on-board diagnostic results.
   - If a malfunction occurred in the past but is now normal, the cause is likely a temporary poor connection of the harness. The ABS/TCS HU/CM usually operates normally. Be careful when searching for the cause of malfunction.
   - After repair, it is necessary to clear the DTC from the ABS/TCS HU/CM memory. Also, if the ABS/TCS related parts have been replaced, verify that the no DTC has been displayed after repairs.
   - After repairing the ABS wheel-speed sensor or ABS sensor rotor, or after replacing the ABS/TCS HU/CM, the ABS warning light may not go off (*) even when the ignition switch is turned ON. In this case, drive the vehicle at a speed of **more than 10km/h {6.2mph}**, make sure that ABS warning light goes off, and then clear the DTC.
     * The BRAKE system warning light also illuminates when there is any rear wheel deformations.
   - When repairing, if the ABS/TCS related connectors are disconnected and the ignition switch is turned ON, the ABS/TCS HU/CM will mistakenly detect a fault and record it as a malfunction.
   - To protect the ABS/TCS HU/CM, make sure the ignition is off before connecting or disconnecting the ABS/TCS HU/CM connector.

   (2) Malfunctions in hydraulic system
   - Symptoms in a hydraulic system malfunction are similar to those in a conventional brake malfunction. However, it is necessary to determine if the malfunction is in an ABS component or the conventional brake system.
   - The ABS hydraulic unit contains delicate mechanical parts. If foreign materials get into the component, the ABS may fail to operate. Also, it will likely become extremely difficult to find the location of the malfunction in the event that the brakes operate but the ABS does not. Make sure foreign materials do not get inside when servicing the ABS (e.g. brake fluid replacement, pipe removal).

Intermittent Concern Troubleshooting
Vibration method

- If malfunction occurs or becomes worse while driving on a rough road or when the engine is vibrating, perform the steps below.

Note

- There are several reasons why vehicle or engine vibration could cause an electrical malfunction. Some of the things to check for are:
  — Connectors not fully seated.
  — Wire harnesses not having full play.
  — Wires laying across brackets or moving parts.
  — Wires routed too close to hot parts.
- An improperly routed, improperly clamped, or loose harness can cause wiring to become pinched between parts.
- The connector joints, points of vibration, and places where wire harnesses pass through the firewall, body panels, etc. are the major areas to be checked.

Inspection method for switch connectors or wires

1. Connect WDS or equivalent to DLC-2.
2. Turn ignition key to ON (engine off).

Note
- If engine starts and runs, perform the following steps at idle.

3. Access PIDs for the switch you are inspecting.
4. Turn switch on manually.
5. Shake each connector or wire harness a bit vertically and horizontally while monitoring the PID.
   - If PID value is unstable, check for poor connection.

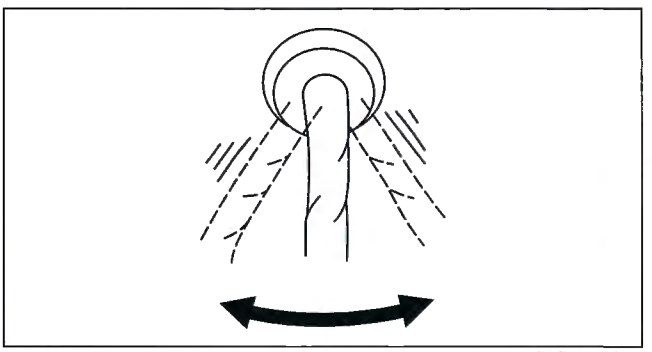

B3E0403W005

Inspection method for sensor connectors or wires

1. Connect WDS or equivalent to DLC-2.
2. Turn ignition key to ON (engine off).

Note
- If engine starts and runs, perform the following steps at idle.

3. Access PIDs for the switch you are inspecting. Shake each connector or wire harness a bit vertically and horizontally while monitoring the PID.
   - If PID value is unstable, check for poor connection.

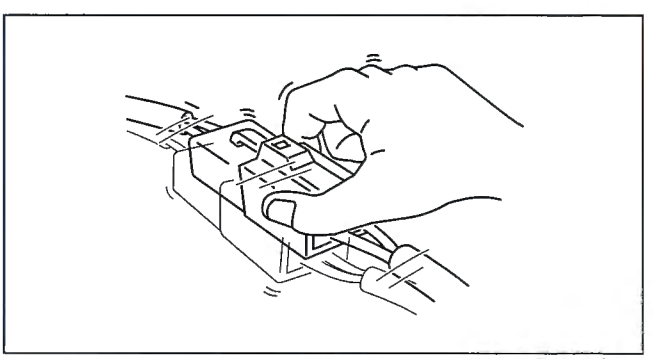

B3E0403W006

Inspection method for sensors

1. Connect WDS or equivalent to DLC-2.
2. Turn ignition key to ON (engine off).

Note
- If engine starts and runs, perform the following steps at idle.

3. Access PIDs for the switch you are inspecting.
4. Vibrate the sensor slightly with your finger.
   - If PID value is unstable or malfunction occurs, check for poor connection and/or poorly mounted sensor.

Malfunction data monitor method

1. Perform malfunction reappearance test according to malfunction reappearance mode and malfunction data monitor. The malfunction cause is found in the malfunction data.

Connector terminal check method

1. Check the connection condition of each female terminal.
2. Insert male terminal; fit the female terminal side to female terminal and check to see whether the malfunction is in the female terminal or not.

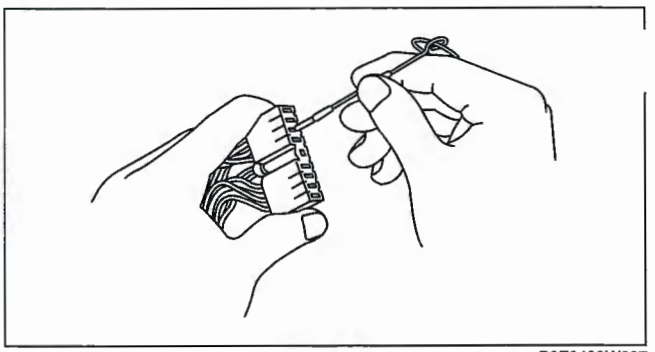

B3E0403W007

SYMPTOM TROUBLESHOOTING [ABS/TCS]

E6U040367650W04

- Verify the symptoms, and perform troubleshooting according to the appropriate number.

No.	Symptom
1	ABS warning light, BRAKE system warning light, TCS indicator light, TCS OFF light do not illuminate with ignition key to ON.
2	Neither ABS warning light nor BRAKE system warning light illuminate with ignition key to ON.
3	ABS warning light does not illuminate with ignition key to ON.
4	BRAKE system warning light and TCS indicator light do not illuminate with ignition key to ON.
5	TCS OFF light does not illuminate with ignition key to ON.
6	Both ABS warning light and BRAKE system warning light stay on **more than 4 s** with ignition key to ON.
7	ABS warning light stays on **more than 4 s** with ignition key to ON.
8	BRAKE system warning light stays on **more than 4 s** with ignition key to ON. (Parking brake is released.)
9	TCS OFF light stays on **more than 4 s** with ignition key to ON.
10	TCS does not work correctly.
11	There is a malfunction in the system even though ABS warning light, BRAKE system warning light, TCS OFF light, TCS indicator light do not illuminate.

x: Applicable

	Possible factor / Troubleshooting item	ABS/TCS HU/CM	Instrument cluster	CAN communication	ABS warning light circuit	BRAKE system warning light circuit	TCS OFF light circuit	TCS OFF switch circuit	Battery	Brake fluid	Brake fluid level sensor	Parking brake switch	Charging system	ABS/TCS HU/CM power supply (terminal Z)	ABS/TCS HU/CM GND 1 (terminal AC)	Instrument cluster power supply (terminal 2V)	Instrument cluster GND (terminal 2F)	Tire size, tire air pressure	Conventional brakes	Brake pipe routing
1	ABS warning light ,BRAKE system warning light, TCS indicator light, TCS OFF light do not illuminate with ignition key ON.	X	X	X												X				
2	Neither ABS warning light nor BRAKE system warning light illuminates with ignition key ON.	X	X	X													X			
3	ABS warning light does not illuminate with ignition key ON.	X	X	X	X															
4	BRAKE system warning light does not illuminate with ignition key ON.	X	X	X		X														
5	TCS OFF light and TCS indicator light do not illuminate with ignition key ON.	X	X	X			X													
6	Both ABS warning light and BRAKE system warning light stay on more than 4 s with ignition key ON.	X	X	X	X	X			X				X	X	X					
7	ABS warning light stays on more than 4 s with ignition key ON.	X	X	X	X															
8	BRAKE system warning light stays on more than 4 s with ignition key ON.	X	X	X		X				X	X	X								
9	TCS OFF light stays on more than 4 s with ignition key ON.	X	X	X			X	X												
10	TCS does not work correctly.	X																X		
11	There is a malfunction in the system even though ABS warning light, BRAKE system warning light, TCS OFF light, TCS indicator light do not illuminate.	X																	X	X

E6U403ZW5003

NO.1 ABS WARNING LIGHT, BRAKE SYSTEM WARNING LIGHT, TCS OFF LIGHT, TCS INDICATOR LIGHT DO NOT ILLUMINATE WITH IGNITION KEY TO ON [ABS/TCS]

E6U040367650W05

1	**ABS warning light, BRAKE system warning light, TCS OFF light, TCS indicator light do not illuminate with ignition key to ON.**

[TROUBLESHOOTING HINTS]
- **Malfunction of instrument cluster or ABS/TCS HU/CM**
- **Improper configuration (instrument cluster)**

STEP	INSPECTION		ACTION
1	**VERIFY WHETHER MALFUNCTION IS IN WARNING LIGHTS AND INDICATOR LIGHTS' COMMON POWER SUPPLY, OR IN OTHER WARNING LIGHTS AND INDICATOR LIGHTS** • Do other warning and indicator lights illuminate when ignition switch is turned to ON?	Yes	Go to step 4.
		No	Go to the next step.
2	**INSPECT INSTRUMENT CLUSTER POWER SUPPLY FUSE** • Is instrument cluster ignition power supply fuse okay?	Yes	Go to the next step.
		No	Check for a short to ground on circuit of blown fuse. Repair or replace if necessary. Install appropriate amperage fuse.
*3	**VERIFY WHETHER MALFUNCTION IS IN WIRING HARNESS (BETWEEN INSTRUMENT CLUSTER POWER SUPPLY AND INSTRUMENT CLUSTER FOR CONTINUITY) OR INSTRUMENT CLUSTER** • Turn ignition key to ON. • Measure voltage at instrument cluster connector (24 pin) terminal 2V. • Is voltage **approximately 12V?**	Yes	Replace instrument cluster (open circuit in instrument cluster).
		No	Check for open circuit between instrument cluster and ground. Repair or replace if necessary.
4	**CONFIRM DTC U1900 USING WDS OR EQUIVALENT** • Retrieve DTC from PCM, ABS/TCS and instrument cluster. • Is DTC U1900 retrieved?	Yes	Go to the next step.
		No	Inspect instrument cluster. If okay, then go to step 6.
5	**CONFIRM THE FOLLOWING PIDs USING WDS OR EQUIVALENT:** • ABS_MSG • PCM_MSG • Is "not present" message displayed on WDS or equivalent?	Yes	Replace instrument cluster (open circuit in instrument cluster).
		No	Network communication, for related system is malfunction. Repair or replace if necessary.
6	**CONFIRM DTC B2477 FOR INSTRUMENT CLUSTER USING WDS OR EQUIVALENT** • Is DTC B2477 retrieved?	Yes	Re-configure the instrument cluster.
		No	Replace ABS/TCS HU/CM.

INSTRUMENT CLUSTER HARNESS-SIDE CONNECTOR

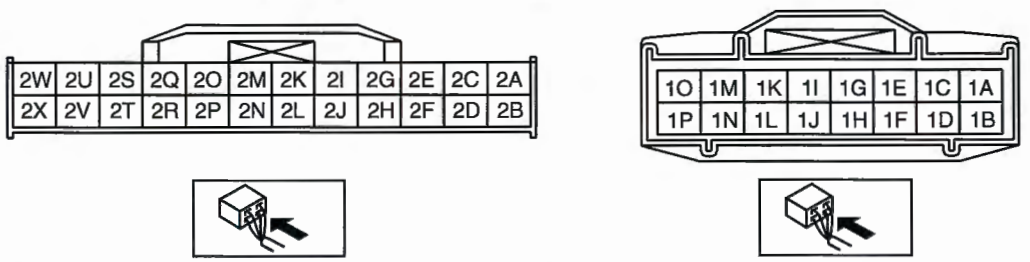

- When performing an asterisked (*) troubleshooting inspection, shake the wiring harness and connectors while doing the inspection to discover whether poor contact points are the cause of any intermittent malfunctions. If there is a problem, check to make sure connectors, terminals and wiring harness are connected correctly and undamaged.

NO.2 NEITHER ABS WARNING LIGHT NOR BRAKE SYSTEM WARNING LIGHT ILLUMINATE WITH IGNITION KEY TO ON [ABS/TCS]

E6U040367650W06

2	Neither ABS warning light nor BRAKE system warning light illuminate with ignition key to ON.

TROUBLESHOOTING HINTS]
- **Malfunction of instrument cluster or ABS/TCS HU/CM**
- **Improper configuration (instrument cluster)**

STEP	INSPECTION		ACTION
1	**VERIFY WHETHER MALFUNCTION IS IN WARNING LIGHTS AND INDICATOR LIGHTS' COMMON POWER SUPPLY, OR IN OTHER WARNING LIGHTS AND INDICATOR LIGHTS** • Do other warning and indicator lights illuminate when ignition switch is turned to ON?	Yes	Go to step 4.
		No	Go to the next step.
2	**INSPECT INSTRUMENT CLUSTER POWER SUPPLY FUSE** • Is instrument cluster ignition power supply fuse okay?	Yes	Go to the next step.
		No	Check for a short to ground on circuit of blown fuse. Repair or replace if necessary. Install appropriate amperage fuse.
*3	**VERIFY WHETHER MALFUNCTION IS IN WIRING HARNESS (BETWEEN INSTRUMENT CLUSTER POWER SUPPLY AND INSTRUMENT CLUSTER FOR CONTINUITY) OR INSTRUMENT CLUSTER** • Turn ignition key to ON. • Measure voltage at instrument cluster connector (24 pin) terminal 2V. • Is voltage **approximately 12V?**	Yes	Replace instrument cluster (open circuit in instrument cluster).
		No	Check for open circuit between instrument cluster and ground. Repair or replace if necessary.
4	**CONFIRM DTC U1900 USING WDS OR EQUIVALENT** • Retrieve DTC from PCM, ABS/TCS and instrument cluster. • Is DTC U1900 retrieved?	Yes	Go to the next step.
		No	Inspect instrument cluster. If okay, then go to step 6.
5	**CONFIRM THE FOLLOWING PIDs USING WDS OR EQUIVALENT:** • ABS_MSG • PCM_MSG • Is "not present" message displayed on WDS or equivalent?	Yes	Replace instrument cluster (open circuit in instrument cluster).
		No	Network communication, for related system is malfunction. Repair or replace if necessary.
6	**CONFIRM DTC B2477 FOR INSTRUMENT CLUSTER USING WDS OR EQUIVALENT** • Is DTC B2477 retrieved?	Yes	Re-configure the instrument cluster.
		No	Replace ABS/TCS HU/CM.

INSTRUMENT CLUSTER HARNESS-SIDE CONNECTOR

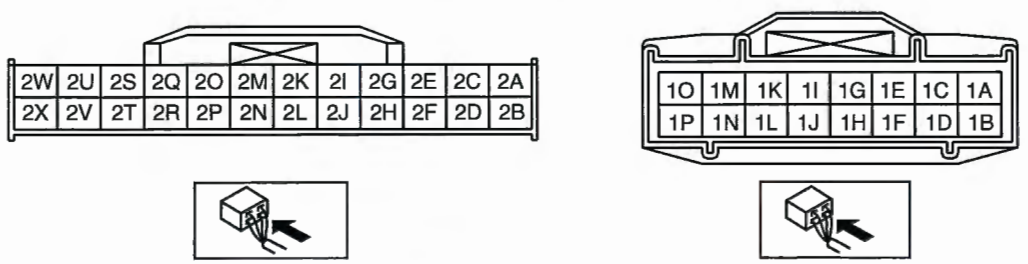

NO.3 ABS WARNING LIGHT DOES NOT ILLUMINATE WITH IGNITION KEY TO ON [ABS/TCS]

E6U040367650W07

3	ABS warning light does not illuminate with ignition key to ON.

[TROUBLESHOOTING HINTS]
- **Malfunction of instrument cluster or ABS/TCS HU/CM**

Diagnostic procedure

STEP	INSPECTION		ACTION
1	**CONFIRM DTC U1900 USING WDS OR EQUIVALENT** • Retrieve DTC from PCM, ABS/TCS and instrument cluster. • Is DTC U1900 retrieved?	Yes	Go to the next step.
		No	Inspect instrument cluster. If okay, then go to the next step.
2	**CONFIRM THE FOLLOWING PIDs USING WDS OR EQUIVALENT:** • ABS_MSG • PCM_MSG • Is "not present" message displayed on WDS or equivalent?	Yes	Replace instrument cluster (open circuit in instrument cluster).
		No	Network communication, for related system is malfunction. Repair or replace if necessary.

INSTRUMENT CLUSTER HARNESS-SIDE CONNECTOR

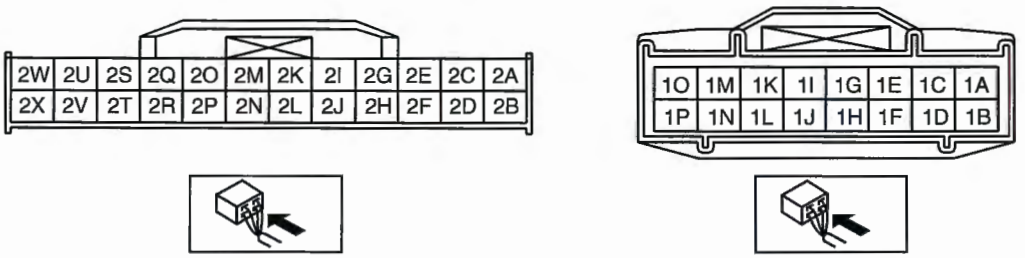

NO.4 BRAKE SYSTEM WARNING LIGHT DOES NOT ILLUMINATE WITH IGNITION KEY TO ON [ABS/TCS]

E6U040367650W08

4	BRAKE system warning light does not illuminate with ignition key to ON.

[TROUBLESHOOTING HINTS]
- **Malfunction of instrument cluster or ABS/TCS HU/CM**

Diagnostic procedure

STEP	INSPECTION		ACTION
1	**CONFIRM DTC U1900 USING WDS OR EQUIVALENT** • Retrieve DTC from PCM, ABS/TCS and instrument cluster. • Is DTC U1900 retrieved?	Yes	Go to the next step.
		No	Inspect instrument cluster. If okay, then go to the next step.
2	**CONFIRM THE FOLLOWING PIDs USING WDS OR EQUIVALENT:** • ABS_MSG • PCM_MSG • Is "not present" message displayed on WDS or equivalent?	Yes	Replace instrument cluster (open circuit in instrument cluster).
		No	Network communication, for related system is malfunction. Repair or replace if necessary.

INSTRUMENT CLUSTER HARNESS-SIDE CONNECTOR

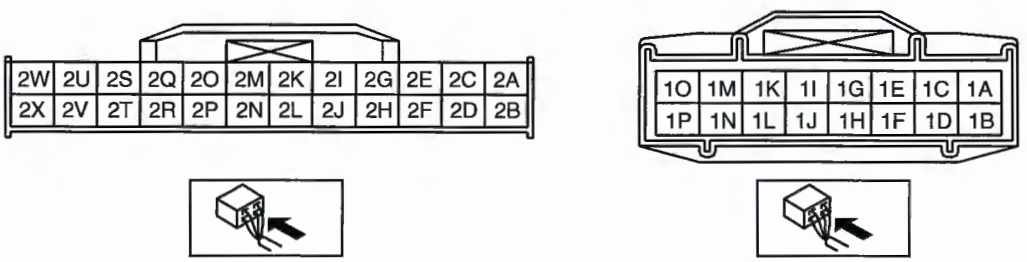

NO.5 TCS OFF LIGHT AND TCS INDICATOR LIGHT DO NOT ILLUMINATE WITH IGNITION KEY TO ON [ABS/TCS]

E6U040367650W09

5	TCS OFF light and TCS indicator light do not illuminate with ignition key to ON.

TROUBLESHOOTING HINTS]
- **Malfunction of instrument cluster or ABS/TCS HU/CM**
- **Improper configuration (ABS/TCS HU/CM)**

Diagnostic procedure

STEP	INSPECTION		ACTION
1	**INSPECT WIRING HARNESS BETWEEN ABS/TCS HU/CM AND DLC-2 FOR CONTINUITY AND SHORT CIRCUIT** • Activate TRAC_OFF (TCS OFF light) using the WDS or equivalent. • Is error message displayed regarding communication between ABS/TCS CM and WDS or equivalent?	Yes	If a communication error message is displayed even after inspecting according to procedures displayed on the WDS or equivalent, go to Step 6.
		No	Go to the next step.
2	**CHECK TCS OFF LIGHT BULB FOR MALFUNCTIONS BY USING INSPECTION FUNCTION IN ABS/TCS HU/CM** • Activate TRAC_OFF (TCS OFF light) using the WDS or equivalent • Does TCS OFF light illuminate?	Yes	Go to the next step.
		No	Go to next step 3.
3	**CONFIRM DTC U1900 USING WDS OR EQUIVALENT** • Retrieve DTC from PCM, ABS/TCS and instrument cluster. • Is DTC U1900 retrieved?	Yes	Go to the next step.
		No	Inspect instrument cluster. If okay, then go to step 6.
4	**CONFIRM THE FOLLOWING PIDs USING WDS OR EQUIVALENT:** • ABS_MSG • PCM_MSG • Is "not present" message displayed on WDS or equivalent?	Yes	Replace instrument cluster (open circuit in instrument cluster).
		No	Network communication, for related system is malfunction. Repair or replace if necessary.
5	**CONFIRM DTC B2477 FOR INSTRUMENT CLUSTER USING WDS OR EQUIVALENT** • Is DTC B2477 retrieved?	Yes	Re-configure the instrument cluster.
		No	Replace ABS/TCS HU/CM.
*6	**INSPECT WIRING HARNESS BETWEEN ABS/TCS CM AND DLC-2 FOR CONTINUITY** • Is there continuity between connector terminal X and DLC-2?	Yes	Go to the next step.
		No	Repair wiring harness between ABS/TCS HU/CM and DLC-2.
*7	**INSPECT WIRING HARNESS BETWEEN ABS/TCS HU/CM AND DLC-2 FOR SHORT CIRCUIT TO B+** • Is voltage **approximately 12 V** at connector terminal X?	Yes	Repair wiring harness between ABS/TCS HU/CM and DLC-2.
		No	Go to the next step.
8	**INSPECT WIRING HARNESS BETWEEN ABS/TCS HU/CM AND DLC-2 FOR SHORT CIRCUIT TO GROUND** • If there continuity between connector terminal X and ground?	Yes	Repair wiring harness between ABS/TCS HU/CM and DLC-2.
		No	Replace ABS/TCS HU/CM (communication circuit malfunction in ABS/TCS HU/CM).

STEP	INSPECTION	ACTION

ABS/TCS HU/CM HARNESS-SIDE CONNECTOR

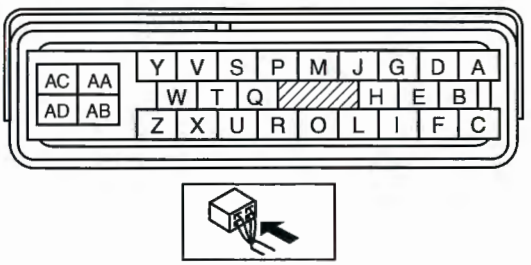

INSTRUMENT CLUSTER HARNESS-SIDE CONNECTOR

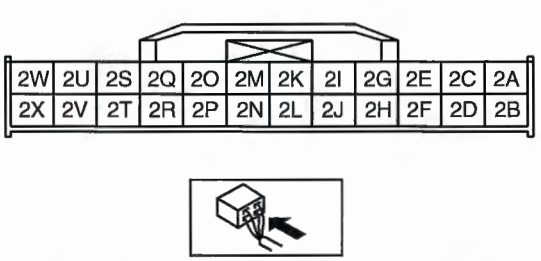

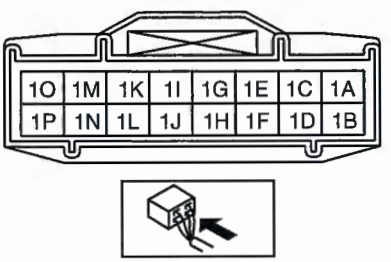

- When performing an asterisked (*) troubleshooting inspection, shake the wiring harness and connectors while doing the inspection to discover whether poor contact points are the cause of any intermittent malfunctions. If there is a problem, check to make sure connectors, terminals and wiring harness are connected correctly and undamaged.

NO.6 BOTH ABS WARNING LIGHT AND BRAKE SYSTEM WARNING LIGHT STAY ON MORE THAN 4 S WITH IGNITION KEY TO ON [ABS/TCS]

E6U040367650W10

6	**Both ABS warning light and BRAKE system warning light stay on more than 4 s with ignition key to ON.**

[TROUBLESHOOTING HINTS]
- **ABS/TCS HU/CM detects ABS proportioning system malfunction.**
- **ABS/TCS HU/CM detects low voltage in power supply (ABS/TCS CM ingestion terminal Z voltage is below about 9 to 10 V).**
- **ABS/TCS HU/CM does not operate.**
- **Malfunction of communication network.**

Diagnostic procedure

STEP	INSPECTION		ACTION
1	**INSPECT ABS/TCS HU/CM POWER SUPPLY FUSE** • Is ABS/TCS HU/CM ignition power supply fuse okay?	Yes	Go to the next step.
		No	Check for a short to ground on circuit of blown fuse. Repair or replace if necessary. Install appropriate amperage fuse.
2	**INSPECT WIRING HARNESS BETWEEN ABS/TCS HU/CM AND DLC-2 FOR CONTINUITY AND SHORT CIRCUIT** • Perform DTC inspection. • Is error message displayed regarding communication between ABS/TCS HU/CM and WDS or equivalent?	Yes	If a communication error message is displayed even after inspecting according to procedure displayed on WDS or equivalent, go to step 10.
		No	Go to the next step.
3	**INSPECT FOR DTCS IN ABS/TCS HU/CM** • Have DTCs been recorded in memory?	Yes	Perform inspection using appropriate DTC.
		No	Go to the next step.
4	**INSPECT PID/DATA IN ABS/TCS HU/CM** • Inspect the following items using the WDS or equivalent PID/DATA monitor function. — ABS_LAMP (ABS warning light) — BRAKE_ LMP (BRAKE system warning light) — ABS_VOLT (power supply voltage) • Is ABS_LAMP and BRAKE_LMP ON after **more than 4 seconds** with ignition key to ON?	Yes	Go to the next step.
		No	Inspect instrument cluster.
5	**INSPECT ABS/TCS HU/CM IGNITION POWER SUPPLY SYSTEM (TERMINAL Z)** • Check the voltage for PID/DATA monitor ABS_VOLT item. **Specification: about 10 V** • Is voltage within specification?	Yes	Replace ABS/TCS HU/CM (open circuit or short in ground circuit in ABS/TCS HU/CM)
		No	Go to the next step.
6	**INSPECT BATTERY** • Is battery voltage normal?	Yes	Go to the next step.
		No	Inspect battery and charging system.
7	**INSPECT CHARGING SYSTEM** • Is battery voltage normal with electrical load (A/C, headlight, etc.) on and engine idling?	Yes	Go to the next step.
		No	Inspect charging system (drive belt tension, generator, etc.).
*8	**INSPECT WIRING HARNESS BETWEEN ABS/TCS HU/CM POWER SUPPLY AND ABS/TCS HU/CM FOR CONTINUITY** • Disconnect ABS/TCS HU/CM connector. • Is voltage **approx. 12 V** at connector terminal Z?	Yes	Go to the next step.
		No	Check for connection of ABS/TCS HU/CM connector securely.
*9	**INSPECT WIRING HARNESS BETWEEN ABS/TCS HU/CM GROUND FOR CONTINUITY** • Turn ignition switch to LOCK. • Is there continuity between connector terminal AC and ground?	Yes	If a malfunction error message is displayed on WDS or equivalent in Step 1 inspection, go to the next step. If a malfunction error message is not displayed on WDS or equivalent in Step 1 inspection, troubleshooting is completed.
		No	Repair wiring harness between ABS/TCS HU/CM and ground.
*10	**INSPECT WIRING HARNESS BETWEEN ABS/TCS HU/CM AND DLC-2 FOR CONTINUITY** • Is there continuity between connector terminal X and DLC-2?	Yes	Go to the next step.
		No	Repair wiring harness between ABS/TCS HU/CM and DLC-2.

STEP	INSPECTION		ACTION
11	*INSPECT WIRING HARNESS BETWEEN ABS/TCS HU/CM AND DLC-2 FOR SHORT CIRCUIT TO BATTERY • Is voltage **approx. 12 V** at connector terminal X?	Yes	Repair wiring harness between ABS/TCS HU/CM and DLC-2.
		No	Go to the next step.
12	*INSPECT WIRING HARNESS BETWEEN ABS/TCS HU/CM AND DLC-2 FOR SHORT CIRCUIT TO GROUND • Is there continuity between connector Terminal X and DLC-2?	Yes	Repair wiring harness between ABS/TCS HU/CM and DLC-2.
		No	Replace ABS/TCS HU/CM (communication circuit malfunction in ABS/TCS HU/CM)

ABS/TCS HU/CM HARNESS-SIDE CONNECTOR

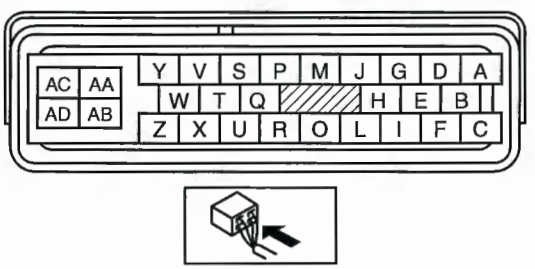

INSTRUMENT CLUSTER HARNESS-SIDE CONNECTOR

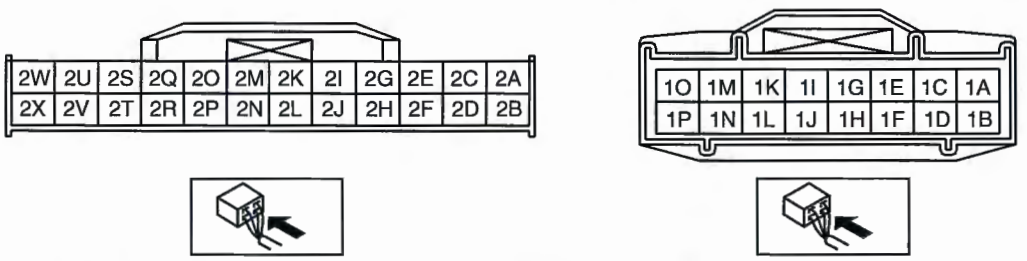

NO.7 ABS WARNING LIGHT STAYS ON MORE THAN 4 S WITH IGNITION KEY TO ON [ABS/TCS]

E6U040367650W11

7	ABS warning light stays on more than 4 seconds with ignition key to ON.
[TROUBLESHOOTING HINTS] • ABS/TCS HU/CM detects ABS system malfunction.	

Diagnostic procedure

STEP	INSPECTION		ACTION
1	**INSPECT WIRING HARNESS BETWEEN ABS/TCS HU/CM AND DLC-2 FOR CONTINUITY AND SHORT CIRCUIT** • Perform DTC inspection. • Is error message displayed regarding communication between ABS/TCS HU/CM and WDS or equivalent?	Yes	If the communication error message is displayed even after inspecting according to procedures displayed in the WDS or equivalent, go to Step 4.
		No	Go to the next step.
2	**INSPECT FOR DTCs IN ABS/TCS HU/CM** • Have DTCs been recorded in memory?	Yes	Perform inspection using appropriate DTC.
		No	Go to the next step.
3	**INSPECT PID/DATA IN ABS/TCS HU/CM** • Inspect the following items using the WDS or equivalent PID/DATA monitor function. — ABS_LAMP (ABS warning light) • Is ABS_LAMP ON after **more than 4 seconds** with ignition key to ON?	Yes	Replace ABS/TCS HU/CM (open circuit or short to ground in ABS/TCS HU/CM).
		No	Inspect instrument cluster.
*4	**INSPECT WIRING HARNESS BETWEEN ABS/TCS HU/CM AND DLC-2 FOR CONTINUITY** Disconnect ABS/TCS HU/CM connector. • Is there continuity between connector terminal X and DLC-2?	Yes	Go to the next step.
		No	Repair wiring harness between ABS/TCS HU/CM and DLC-2.
*5	**INSPECT WIRING HARNESS BETWEEN ABS/TCS HU/CM AND DLC-2 FOR SHORT CIRCUIT TO B+** • Is voltage **approx. 12V** at connector terminal X?	Yes	Repair wiring harness between ABS/TCS HU/CM and DLC-2.
		No	Go to the next step.
*6	**INSPECT WIRING HARNESS BETWEEN ABS/TCS HU/CM AND DLC-2 FOR SHORT CIRCUIT TO GROUND** • Is there continuity between connector terminal X and ground?	Yes	Repair wiring harness between ABS/TCS HU/CM and DLC-2.
		No	Replace ABS/TCS HU/CM (communication circuit malfunction is ABS/TCS HU/CM).

ABS/TCS HU/CM HARNESS-SIDE CONNECTOR

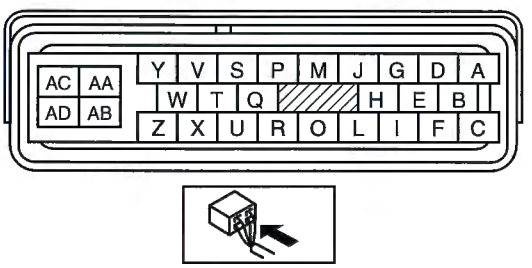

INSTRUMENT CLUSTER HARNESS-SIDE CONNECTOR

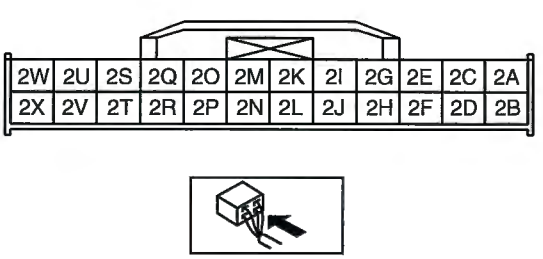

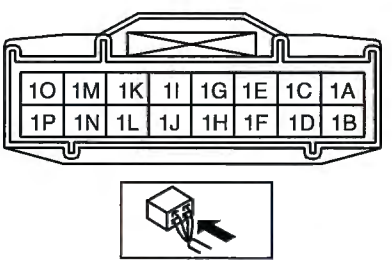

- When performing an asterisked (*) troubleshooting inspection, shake the wiring harness and connectors while doing the inspection to discover whether poor contact points are the cause of any intermittent malfunctions. If there is a problem, check to make sure connectors, terminals and wiring harness are connected correctly and undamaged.

NO.8 BRAKE SYSTEM WARNING LIGHT STAYS ON MORE THAN 4 S WITH IGNITION KEY TO ON [ABS/TCS]

E6U040367650W12

8	**BRAKE system warning light stays on more than 4 s with ignition key to ON. (Parking brake is released.)**

[TROUBLESHOOTING HINTS]
- **Malfunction of instrument cluster or ABS/TCS HU/CM**
- **Short to ground in circuit in parking brake switch and/or brake fluid level sensor**

Diagnostic procedure

STEP	INSPECTION		ACTION
1	**INSPECT BRAKE FLUID LEVEL** • Is brake fluid level okay?	Yes	Go to the next step.
		No	Add brake fluid.
*2	**INSPECT WIRING HARNESS BETWEEN ABS/TCS HU/CM AND DLC-2 FOR CONTINUITY AND SHORT CIRCUIT** • Inspect the following items using the WDS or equivalent PID/DATA monitor function. — BRAKE_LMP (BRAKE system warning light) • Is error message displayed regarding communication between ABS/TCS HU/CM and WDS or equivalent?	Yes	If a communication error message is displayed even after inspecting according to procedures displayed on WDS or equivalent. Go to next step 6.
		No	Go to the next step.
3	**INSPECT FOR DTCs IN ABS/TCS HU/CM** • Have DTCs been recorded in memory?	Yes	Perform inspection using appropriate DTC.
		No	Go to the next step.
4	**INSPECT PID/DATA IN ABS/TCS HU/CM** • Inspect (BRAKE system warning light) using the WDS or equivalent PID/DATA monitor function. • Is BRAKE_LMP on after **more than 4 s** with ignition key to ON?	Yes	Replace ABS/TCS HU/CM.
		No	Go to the next step.
5	**VERIFY WHETHER MALFUNCTION IS IN PARKING BRAKE SWITCH OR BRAKE FLUID LEVEL SENSOR, OR IN SOME OTHER PART** • Disconnect the following in order: 1. Parking brake switch connector 2. Brake fluid level sensor connector • Does BRAKE system warning light go out with ignition key to ON?	Yes	Replace parking brake switch and/or brake fluid level sensor (shorted on some internal part).
		No	Perform the following inspections. Repair if necessary. • Short to ground in wiring harness between instrument cluster (BRAKE system warning light) and parking brake switch. • Short to ground in wiring harness between instrument cluster (BRAKE system warning light) and brake fluid level sensor. Inspect instrument cluster.
*6	**INSPECT WIRING HARNESS BETWEEN ABS/TCS HU/CM AND DLC-2 FOR CONTINUITY** • Disconnect ABS/TCS HU/CM connector. • Is there continuity between connector terminal X and DLC-2?	Yes	Go to the next step.
		No	Repair wiring harness between ABS/TCS HU/CM and DLC-2.
*7	**INSPECT WIRING HARNESS BETWEEN ABS/TCS HU/CM AND DLC-2 FOR SHORT CIRCUIT TO B+** • Is voltage **approx. 12 V** at connector terminal X?	Yes	Repair wiring harness between ABS/TCS HU/CM and DLC-2.
		No	Go to the next step.
*8	**INSPECT WIRING HARNESS BETWEEN ABS/TCS HU/CM AND DLC-2 FOR SHORT CIRCUIT TO GROUND** • Is there continuity between connector terminal X and ground?	Yes	Repair wiring harness between ABS/TCS HU/CM and DLC-2.
		No	Replace ABS/TCS HU/CM (communication circuit malfunction in ABS/TCS HU/CM).

STEP	INSPECTION	ACTION

ABS/TCS HU/CM HARNESS-SIDE CONNECTOR

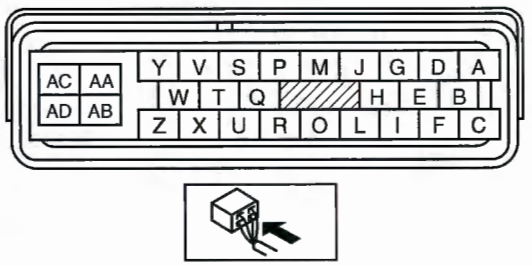

INSTRUMENT CLUSTER HARNESS-SIDE CONNECTOR

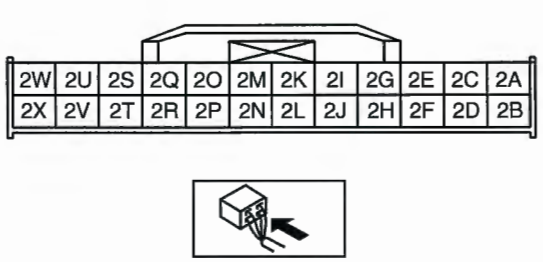

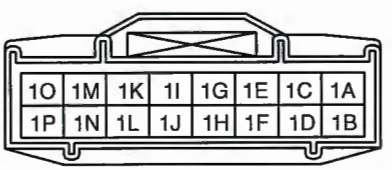

- When performing an asterisked (*) troubleshooting inspection, shake the wiring harness and connectors while doing the inspection to discover whether poor contact points are the cause of any intermittent malfunctions. If there is a problem, check to make sure connectors, terminals and wiring harness are connected correctly and undamaged.

NO.9 TCS OFF LIGHT STAYS ON MORE THAN 4 S WITH IGNITION KEY TO ON [ABS/TCS]

E6U040367650W13

9	TCS OFF light stays on more than 4 s with ignition key to ON

[TROUBLESHOOTING HINTS]
- **Warning light circuit open or shorted to ground in ABS/TCS HU/CM**

Diagnostic procedure

STEP	INSPECTION		ACTION
1	**INSPECT WIRING HARNESS BETWEEN ABS/TCS HU/CM AND DLC-2 FOR CONTINUITY AND SHORT CIRCUIT** • Perform DTC inspection. • Is error message displayed regarding communication between ABS/TCS HU/CM and WDS or equivalent?	Yes	If a communication error message is displayed even after inspecting according to procedures displayed on WDS or equivalent, go to Step 7.
		No	Go to the next step.
2	**INSPECT FOR DTCS IN ABS/TCS HU/CM** • Have DTCs been recorded in memory?	Yes	Perform inspection using appropriate DTC.
		No	Go to the next step.
3	**INSPECT PID/DATA IN ABS/TCS HU/CM** • Inspect the following items using the WDS or equivalent PID/DATA monitor function. — TRAC_SW (TCS OFF switch) • Is TRAC_SW ON displayed on WDS or equivalent?	Yes	Go to Step 5 (TCS OFF switch system malfunction).
		No	Go to the next step.
*4	**CHECK FOR SHORT CIRCUIT TO GROUND IN ABS/TCS HU/CM** • Disconnect ABS/TCS HU/CM connector. • Does TCS OFF light go out with ignition key to ON?	Yes	Replace ABS/TCS HU/CM (short to ground in ABS/TCS HU/CM).
		No	Inspect instrument cluster.
*5	**INSPECT TCS OFF SWITCH** • Disconnect TCS OFF switch connector. • Is TRAC_SW ON displayed on WDS or equivalent?	Yes	Go to the next step.
		No	Replace TCS OFF switch (TCS will not turn off, even though switch is OFF).
*6	**VERIFY WHETHER MALFUNCTION IS IN WIRING HARNESS (BETWEEN ABS/TCS HU/CM AND TCS OFF SWITCH, CHECK FOR SHORT CIRCUIT TO GROUND) OR ABS/TCS HU/CM** • Is there continuity between connector terminal P and ground?	Yes	Repair wiring harness between ABS/TCS HU/CM (termina P) and TCS OFF switch.
*7	**INSPECT WIRING HARNESS BETWEEN ABS/TCS HU/CM AND DLC-2 FOR SHORT CIRCUIT TO B+** • Is voltage **approx. 12 V** at connector terminal X?	Yes	Repair wiring harness between ABS/TCS HU/CM (terminal P) and DLC-2.
		No	Go to the next step.
*8	**INSPECT WIRING HARNESS BETWEEN ABS/TCS HU/CM AND DLC-2 FOR SHORT CIRCUIT TO GROUND** • Is there continuity between connector terminal X and ground?	Yes	Repair wiring harness between ABS/TCS HU/CM and DLC-2.
		No	Replace ABS/TCS HU/CM (communication circuit malfunction in ABS/TCS HU/CM).

ABS/TCS HU/CM HARNESS-SIDE CONNECTOR

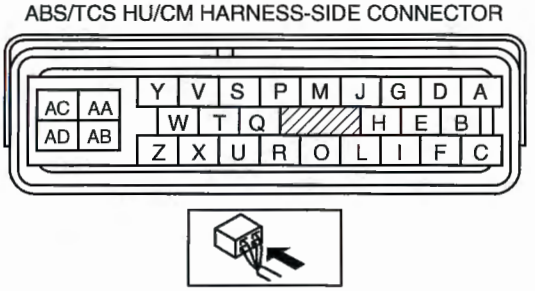

- When performing an asterisked (*) troubleshooting inspection, shake the wiring harness and connectors while doing the inspection to discover whether poor contact points are the cause of any intermittent malfunctions. If there is a problem, check to make sure connectors, terminals and wiring harness are connected correctly and undamaged

NO.10 TCS DOES NOT WORK CORRECTLY [ABS/TCS]

E6U040367650W14

10	TCS does not work correctly.

TROUBLESHOOTING HINTS]

There is a difference in size or air pressure between the front and rear tires

- **There is a malfunction in the engine control system.**
- **ABS/TCS HU/CM detects TCS system malfunction**

Diagnostic procedure

STEP	INSPECTION		ACTION
1	**INSPECT TIRE SIZE AND AIR PRESSURE** • Inspect tire size and air pressure. • Are size and air pressure as specified?	Yes	Go to the next step.
		No	Replace with specified tires or adjust tire air pressure.
2	**INSPECT FOR DTCS IN ABS/TCS HU/CM** • Have DTCs been recorded in memory?	Yes	Perform inspection using appropriate DTC.
		No	Go to the next step.
3	**INSPECT FOR DTCS IN PCM** • Inspect the DTC for the PCM ON-BOARD DIAGNOSTIC SYSTEM. • Have DTCs been recorded in memory?	Yes	Perform inspection using appropriate DTC.
		No	Go to the next step.
4	**INSPECT FOR TCS OPERATION** • Jack up the front of the vehicle on level ground and support it on safety support. • Start the engine, and depress the accelerator pedal. • Does engine speed decrease?	Yes	System is normal. Recheck customer's complaint.
		No	Replace ABS/TCS HU/CM.

04–03A

NO.11 THERE IS A MALFUNCTION IN THE SYSTEM EVEN THOUGH ABS WARNING LIGHT, BRAKE SYSTEM WARNING LIGHT, TCS OFF LIGHT, TCS INDICATOR LIGHT DO NOT ILLUMINATE [ABS/TCS]

E6U040367650W15

11	There is a malfunction in the system even though ABS warning light, BRAKE system warning light, TCS OFF light, TCS indicator light do not illuminate.

TROUBLESHOOTING HINTS]

- **There is a difference in size or air pressure between the front and rear tires**

Diagnostic procedure

STEP	INSPECTION		ACTION
1	**INSPECT FOR DTCs IN ABS/TCS HU/CM** • Have DTCs been recorded in memory?	Yes	Perform inspection using appropriate DTC.
		No	Go to the next step.
2	**INSPECT ABS HYDRAULIC UNIT** • Perform ABS/TCS hydraulic unit system inspection. • Is system okay?	Yes	Inspect conventional brake system.
		No	**If wheels do not rotate:** Replace ABS/TCS HU/CM. **If wheels rotate but order in which wheels rotate is incorrect:** Inspect brake pipe passage to ABS/TCS HU/CM.

04–03B SYMPTOM TROUBLESHOOTING [DYNAMIC STABILITY CONTROL]

DSC SYSTEM WIRING DIAGRAM 04–03B–2
FOREWORD [DSC] 04–03B–2
PRECAUTION [DSC] 04–03B–3
Intermittent Concern Troubleshooting 04–03B–4
SYMPTOM TROUBLESHOOTING [DSC] 04–03B–6
NO.1 ANY OF THE FOLLOWING LIGHTS DO NOT ILLUMINATE WITH IGNITION SWITCH ON: (ABS WARNING LIGHT, BRAKE SYSTEM WARNING LIGHT, DSC INDICATOR LIGHT AND/OR DSC OFF LIGHT) [DSC] 04–03B–8
NO.2 ANY OF THE FOLLOWING LIGHTS STAY ON: (ABS WARNING LIGHT, BRAKE SYSTEM WARNING LIGHT, DSC INDICATOR LIGHT AND/OR DSC OFF LIGHT) [DSC] 04–03B–9
NO.3 THERE IS A MALFUNCTION IN THE SYSTEM EVEN THOUGH ABS WARNING LIGHT, BRAKE SYSTEM WARNING LIGHT, DSC INDICATOR LIGHT AND DSC OFF LIGHT DO NOT ILLUMINATE [DSC] 04–03B–10
NO.4 ABS OR TCS*1 OPERATES FREQUENTLY/TCS DOES NOT WORK CORRECTLY*1: DSC SYSTEM FUNCTION CONTAINS TRACTION CONTROL FUNCTION, DSC INDICATOR LIGHT GOES ON AND OFF WHILE DSC OPERATES [DSC] 04–03B–10
NO.5 DSC*2 OPERATES FREQUENTLY/DSC DOES NOT WORK CORRECTLY*2: DSC INDICATOR LIGHT GOES ON AND OFF WHILE DSC OPERATES [DSC] 04–03B–11
NO.6 DSC INDICATOR LIGHT FLASHES (WHEN NEITHER THE TCS NOR THE DSC ARE OPERATING) [DSC] 04–03B–11

DSC SYSTEM WIRING DIAGRAM

E6U040300000W22

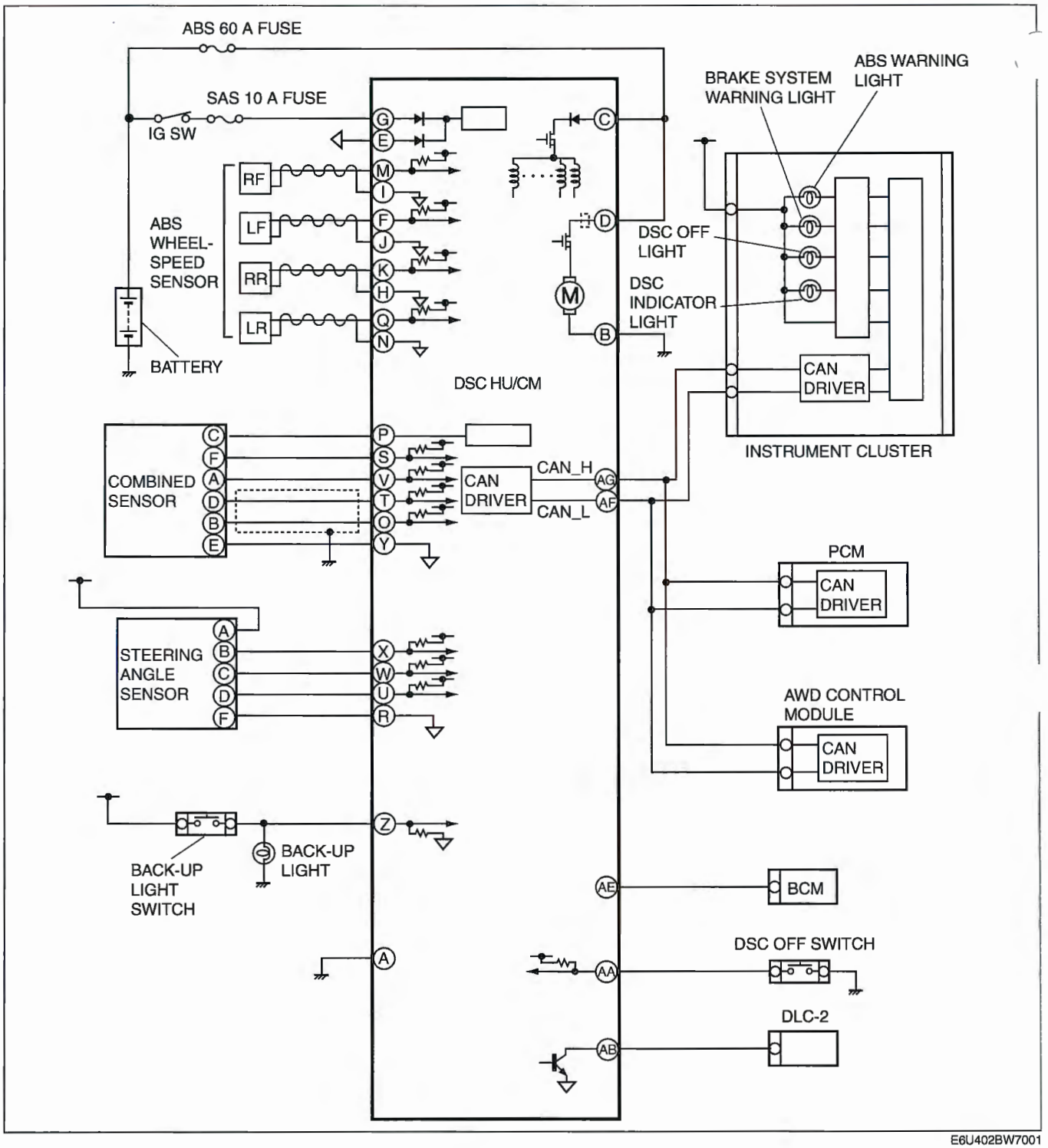

E6U402BW7001

FOREWORD [DSC]

E6U040300000W23

- Before performing the steps in Symptom Troubleshooting, perform the On-board Diagnostic Inspection. To check the DTC, follow the DTC Inspection steps.

PRECAUTION [DSC]

E6U040300000W24

1. The ABS warning light and/or BRAKE system warning light and/or DSC indicator light and/or DSC OFF light illuminate even when the system is normal.

Warning lights that may illuminate and/or flash	Cases in which the light may illuminate	Conditions in which the light will go out	ABS, EBD, TCS and DSC control
• ABS warning light • BRAKE system warning light • DSC indicator light • DSC OFF light	Under any of the following conditions: • When the front wheels are jacked up, struck, or placed on a chassis roller, and only the front wheel ABS wheel speed sensors are spun for **more than 60 s.**	After turning ignition switch OFF, vehicle is driven at speed **greater than 10 km/h {6.2 mph}** and normal operation is confirmed.	• ABS: Cuts control. • EBD: Cuts control. • TCS: Cuts control. • DSC: Cuts control.
	Parking brake is not fully released while driving.		
	Brake drag.		
	Sudden acceleration/deceleration.		
	Left/right or front/rear tires are different. (Size, radius, tire pressure, or wear is other than that listed on tire label.)		
	Battery voltage at DSC HU/CM ignition terminal drops **below about 9.5 V.**	Battery voltage rises **above about 9.5 V.**	ABS: Operates control. EBD: Operates control. TCS: Operates control. DSC: Operates control.
• Brake system warning light • DSC indicator light • DSC OFF light	Brake fluid amount is low.	Brake fluid level lower than recommended amount.	ABS: Operates control. EBD: Operates control. TCS: Cuts control. DSC: Cuts control.

. Precautions during servicing of DSC The DSC is composed of electrical and mechanical parts. It is necessary to categorize malfunctions as being either electrical or hydraulic when performing troubleshooting.

(1) Malfunction in electrical system

- The control module has an on-board diagnostic function. With this function, the ABS warning light and/or BRAKE system warning light and/or DSC indicator light and/or DSC OFF light will come on when there is a problem in the electrical system.
  Also, past and present malfunctions are recorded in the control module. This function can find malfunction that do not occur during periodic inspections. Connect the WDS or equivalent to the DLC-2. The stored malfunctions will be displayed in the order of occurrence. To fine out the causes of DSC malfunction, use these on-board diagnostic results.
- If a malfunction occurred in the past but is now normal, the cause is likely a temporary poor connection of the harness.
  The control module usually operates normally. Be careful when searching for the cause of malfunction.
- After repair, it is necessary to clear the DTC from the control module memory.
  Also, if the DSC related parts have been replaced, verify that the no DTC has been displayed after repairs.
- After repairing the ABS wheel-speed sensor or ABS sensor rotor, or after replacing the control module, the ABS warning light may not go off even when the ignition switch is turned on. In this case, drive the vehicle at a speed of **more than 10 km/h {6.2 mph}**, make sure the ABS warning light goes off, and then clear the DTC.
- When repairing, if the DSC related connectors are disconnected and the ignition switch is turned on, the control module will mistakenly detect a fault and record it as a malfunction.

Caution

- **In DSC vehicles, when any DSC HU/CM, steering angle sensor, combined sensor are replaced. Perform the sensor standard point installation of each sensor.**

- To protect the control module, make sure the ignition is off before connecting or disconnecting the control module connector.

(2) Malfunctions in hydraulic system
- Symptoms in a hydraulic system malfunction are similar to those in a conventional brake malfunction. However, it is necessary to determine if the malfunction is in a DSC component or the conventional brake system.
- The hydraulic unit contains delicate mechanical parts. If foreign materials get into the component, the DSC may fail to operate. Also, it will likely become extremely difficult to find the location of the malfunction in the event that the brakes operate but the DSC does not. Make sure foreign materials do not get inside when servicing the DSC (e.g.brake fluid replacement, pipe removal).

Intermittent Concern Troubleshooting
Vibration method
- If malfunction occurs or becomes worse while driving on a rough road or when engine is vibrating, perform the steps below.

Note
- There are several reasons why vehicle or engine vibration could cause an electrical malfunction. Some of the things to check for are:
  — Connectors not fully seated.
  — Wire harnesses not having full play.
  — Wires laying across brackets or moving parts.
  — Wires routed too close to hot parts.
- An improperly routed, improperly clamped, or loose harness can cause wiring to become pinched between parts.
- The connector joints, points of vibration, and places where wire harnesses pass through the firewall, body panels, etc. are the major areas to be checked.

Inspection method for switch connectors or wires
1. Connect WDS or equivalent to DLC.
2. Turn ignition switch to ON (Engine OFF).

Note
- If engine starts and runs, perform the following steps at idle.

3. Access PIDs for the switch you are inspecting.
4. Turn switch on manually.
5. Shake each connector or wire harness a bit vertically and horizontally while monitoring the PID.
   - If PID value is unstable, check for poor connection.

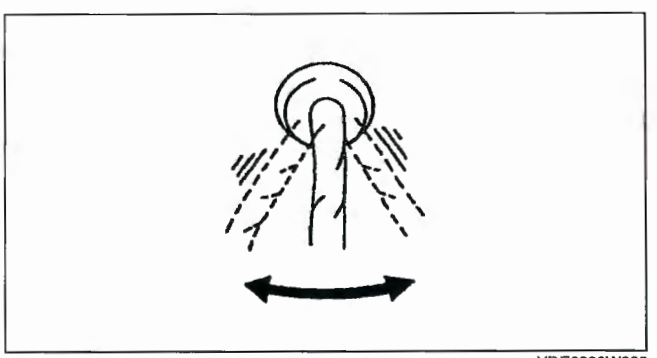

YDE6980W003

Inspection method for sensor connectors or wires

1. Connect WDS or equivalent to DLC.
2. Turn ignition switch to ON (Engine OFF).

Note
- If engine starts and runs, perform the following steps at idle.

3. Access PIDs for the switch you are inspecting.
4. Shake each connector or wire harness a bit vertically and horizontally while monitoring the PID.
   - If PID value is unstable, check for poor connection.

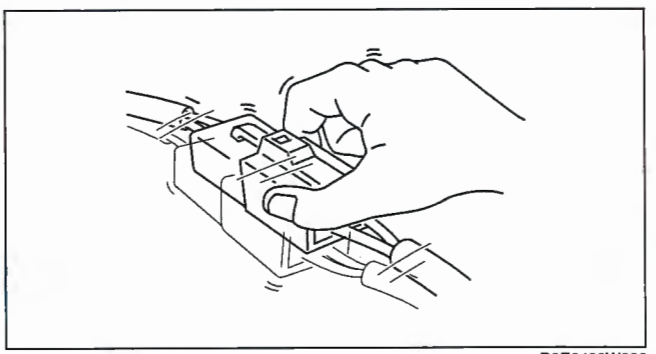

B3E0403W006

Inspection method for sensors

1. Connect WDS or equivalent to DLC.
2. Turn ignition switch to ON (Engine OFF).

Note
- If engine starts and runs, perform the following steps at idle.

3. Access PIDs for the switch you are inspecting.
4. Vibrate the sensor slightly with your finger.
   - If PID value is unstable or malfunction occurs, check for poor connection and/or poorly mounted sensor.

Malfunction data monitor method

1. Perform malfunction reappearance test according to malfunction reappearance mode and malfunction data monitor. The malfunction cause is found in the malfunction data.

Connector terminal check method

1. Check the connection condition of each female terminal.
2. Insert male terminal; fit female terminal size to female terminal and check to see whether malfunction is in female terminal or not.

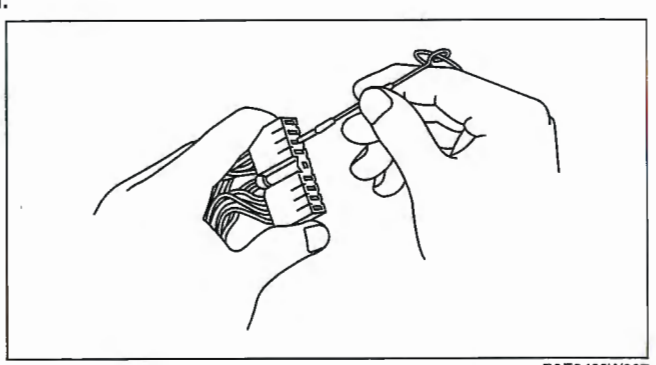

B3E0403W007

SYMPTOM TROUBLESHOOTING [DSC]

E6U040300000W25

- Verify the symptoms, and perform troubleshooting according to the appropriate number.

No.	Symptom
1	Any of the following lights do not illuminate with ignition switch on. • ABS warning light • BRAKE system warning light • DSC indicator light • TCS OFF light
2	Any of the following lights stay on: • ABS warning light. • BRAKE system warning light • DSC indicator light • TCS OFF light
3	There is a malfunction in the system even though ABS warning light, BRAKE system warning light, DSC indicator light and TCS OFF light do not illuminate.
4	ABS or TCS*1 operates frequently.
	TCS does not work correctly.
5	DSC*2 operates frequently.
	DSC does not work correctly.
6	DSC indicator light flashes (when neither the TCS nor the DSC are operating).

*1 : DSC system contains traction control function, DSC indicator light goes on and off while DSC operates.
*2 : DSC indicator light goes on and off while DSC operates.

x: Applicable

	Possible factor / Troubleshooting item	DSC HU/CM	Instrument cluster	CAN communication	ABS warning light circuit	BRAKE system warning light circuit	DSC indicator light circuit	DSC OFF light circuit	Each sensor installation	Battery	Charging system	Brake fluid	Parking brake	Tire	Tire air pressure	Control module power supply system	Control module ground system	Instrument cluster power supply system	Instrument cluster ground system	Conventional brake	Module configuration
1	Any of the following light do not illuminate with ignition switch on: (ABS warning light, BRAKE system warning light, DSC indicator light and/or DSC OFF light).	X	X	X														X	X		
2	Any of the following lights stay on: (ABS warning light, BRAKE system warning light, DSC indicator light and/or DSC OFF light).	X	X	X	X	X	X	X	X	X	X	X	X			X	X				
3	There is a malfunction in the system even though ABS warning light, DSC indicator light, and DSC OFF light do not illuminate.																			X	
4	ABS or TCS (*1) operates frequently. /TCS does not work correctly. (*1): DSC system's contain traction control function, DSC indicator light goes on and off while DSC operate.	X							X					X	X						
5	DSC (*2) operates frequently. /DSC does not work correctly. (*2): DSC indicator light goes on and while DSC operate.	X							X												
6	DSC indicator light flashes (When neither the TCS nor the DSC are operating)																				X

*1: DSC SYSTEM CONTAINS TRACTION CONTROL FUNCTION, DSC INDICATOR LIGHT GOES ON AND OFF WHILE DSC OPERATES

*2: DSC INDICATOR LIGHT GOES ON AND OFF WHILE DSC OPERATES

E6U403BW7001

NO.1 ANY OF THE FOLLOWING LIGHTS DO NOT ILLUMINATE WITH IGNITION SWITCH ON: (ABS WARNING LIGHT, BRAKE SYSTEM WARNING LIGHT, DSC INDICATOR LIGHT AND/OR DSC OFF LIGHT) [DSC]

E6U040300000W

1	**Any of the following lights do not illuminate with ignition switch on: (ABS warning light, BRAKE system warning light, DSC indicator light and/or DSC OFF light).**

[TROUBLESHOOTING HINTS]
- **Inspect each light in the instrument cluster for malfunction**
- **Poor connection at DSC HU/CM connector**

Diagnostic procedure

STEP	INSPECTION		ACTION
1	**INSPECT FOR DTCS IN DSC HU/CM** • Inspect the DTC for the DSC ON-BOARD DIAGNOSTIC SYSTEM. • Have DTCs been recorded in memory?	Yes	Perform inspection using appropriate DTC.
		No	Go to next step.
2	**INSPECT TO SEE WHETHER MALFUNCTION IS IN INSTRUMENT CLUSTER SYSTEM OR OTHER SYSTEM** • Do other warning and indicator lights illuminate when IG switch is turned ON?	Yes	Go to next step.
		No	Inspect or repair instrument cluster (power supply system, ground system).
3	**VERIFY THAT DSC HU/CM CONNECTOR IS CONNECTED** • Is DSC HU/CM securely connected?	Yes	Go to next step.
		No	Connect DSC HU/CM connector securely, then go to next step.
4	**VERIFY THAT DSC HU/CM CONNECTOR TERMINAL OR RELATED CONNECTOR TERMINALS ARE CONNECTED** • Are DSC HU/CM connector terminal, or instrument cluster connector terminal, or related connector terminals securely connected?	Yes	Go to next step.
		No	Connect DSC HU/CM connector terminal etc. related connector terminal securely.
5	**INSPECT FOR DTC IN CAN COMMUNICATION** • Reconnect all disconnected connectors. • Clear the DTC from DSC HU/CM memory using the WDS or equivalent. • Turn the ignition switch to ON. • Inspect the DTC for DSC ON-BOARD DIAGNOSTIC SYSTEM. • Is the DTC U1900 stored?	Yes	Inspect and repair CAN communication related harness or connectors. If the harness and connectors are normal, replace DSC HU/CM.
		No	Inspect and repair the instrument cluster.

NO.2 ANY OF THE FOLLOWING LIGHTS STAY ON: (ABS WARNING LIGHT, BRAKE SYSTEM WARNING LIGHT, DSC INDICATOR LIGHT AND/OR DSC OFF LIGHT) [DSC]

E6U040300000W27

2	**Any of the following lights stay on: (ABS warning light, BRAKE system warning light, DSC indicator light and/or DSC OFF light)**

[TROUBLESHOOTING HINTS]
- **Brake fluid amount is low**
- **Parking brake does not release**
- **No connection at DSC HU/CM HU/CM connector (when DSC HU/CM connector comes off, ABS warning light and BRAKE system warning light illuminate)**
- **DSC HU/CM detected malfunction (input and output device malfunction)**
- **DSC HU/CM detects low voltage in power supply**
- **DSC HU/CM ground malfunction (when DSC HU/CM ground is not securely connected, ABS warning light and BRAKE system warning light illuminate but diagnostic trouble code does not display)**

Diagnostic procedure

STEP	INSPECTION		ACTION
1	**INSPECT BRAKE FLUID AMOUNT AND VERIFY THAT PARKING BRAKE RELEASES** • Is brake fluid amount normal? • Is parking brake lever released?	Yes	Go to next step.
		No	Add brake fluid or release parking brake lever.
2	**INSPECT FOR DTCS IN DSC HU/CM** • Inspect the DTC for the DSC ON-BOARD DIAGNOSTIC SYSTEM. • Have DTCs been recorded in memory?	Yes	Perform inspection using appropriate DTC.
		No	Go to next step.
3	**INSPECT TO SEE WHETHER MALFUNCTION IS IN CONTROL MODULE CONNECTOR, TERMINAL OR OTHER** • Do ABS warning light and BRAKE system warning light go off after **4 s** with ignition switch on?	Yes	Temporary poor connection in control module connector. Inspect DSC HU/CM connector, then go to Step 6. Inspect DSC HU/CM connector terminal, then go to Step 7.
		No	Go to next step.
4	**INSPECT BATTERY** • Is battery voltage normal?	Yes	Go to next step.
		No	Inspect battery and charging system.
5	**INSPECT CHARGING SYSTEM** • Is battery voltage normal with electrical load (A/C, headlight, etc.) on and engine idling?	Yes	Go to next step.
		No	Inspect charging system (drive belt tension, generator, etc.).
6	**VERIFY THAT DSC HU/CM CONNECTOR IS CONNECTED** • Is DSC HU/CM securely connected?	Yes	Go to next step.
		No	Connect DSC HU/CM connector securely, then go to next step.
7	**VERIFY THAT DSC HU/CM CONNECTOR TERMINAL OR RELATED CONNECTOR TERMINALS ARE CONNECTED** • Are DSC HU/CM connector terminal or instrument cluster connector terminal etc. related connector terminals securely connected?	Yes	Inspect and repair followings: • DSC HU/CM power supply and ground system wiring harness. • Instrument cluster
		No	Connect DSC HU/CM connector terminal etc. related connector terminals securely.

NO.3 THERE IS A MALFUNCTION IN THE SYSTEM EVEN THOUGH ABS WARNING LIGHT, BRAKE SYSTEM WARNING LIGHT, DSC INDICATOR LIGHT AND DSC OFF LIGHT DO NOT ILLUMINATE [DSC]

E6U040300000W28

3	**There is a malfunction in the system even though ABS warning light, BRAKE system warning light. DSC indicator light and DSC OFF light do not illuminate.**

[TROUBLESHOOTING HINTS]
- **There is a mechanical malfunction in system**

Diagnostic procedure

STEP	INSPECTION		ACTION
1	**INSPECT DSC HU/CM FOR DTCS** • Inspect the DTC for the DSC ON-BOARD DIAGNOSTIC SYSTEM. • Have DTCs been recorded in memory?	Yes	Perform inspection using appropriate DTC.
		No	Go to next step.
2	**INSPECT DSC SYSTEM** • Perform DSC system inspection. • Is the system normal?	Yes	Inspect conventional brake system.
		No	Repair or replace malfunctioning part.

NO.4 ABS OR TCS*1 OPERATES FREQUENTLY/TCS DOES NOT WORK CORRECTLY*1: DSC SYSTEM FUNCTION CONTAINS TRACTION CONTROL FUNCTION, DSC INDICATOR LIGHT GOES ON AND OFF WHILE DSC OPERATES [DSC]

E6U040300000W29

4	**ABS or TCS (*1) operates frequently./TCS does not work correctly.** **(*1): DSC system function contains traction control function, DSC indicator light goes on and off while DSC operates.**

[TROUBLESHOOTING HINTS]
- **There is a difference in size or air pressure between the front and rear tires**
- **Incorrect ABS wheel-speed signal is inputted to DSC HU/CM**
- **There is a malfunction in the engine control system (TCS malfunction)**

Diagnostic procedure

STEP	INSPECTION		ACTION
1	**INSPECT FOR DTCS IN DSC HU/CM** • Check the DTC for the DSC ON-BOARD DIAGNOSTIC SYSTEM. • Have DTCs been recorded in memory?	Yes	Perform inspection using appropriate DTC.
		No	Go to next step.
2	**INSPECT TIRE SIZE AND AIR PRESSURE** • Inspect tire size and air pressure. • Are size and air pressure as specified?	Yes	Go to next step.
		No	Replace with specified tires and adjust tire air pressure.
3	**INSPECT ABS WHEEL-SPEED SENSOR OUTPUT PULSE** • Inspect the output value from the ABS wheel-speed sensor. • Is output value normal?	Yes	Found malfunctioning part according to "INTERMITTENT CONCERN TROUBLESHOOTING".
		No	• ABS wheel-speed sensor installation inspection: Inspect the ABS wheel-speed sensor for looseness and confirm it is securely adhered. • ABS sensor rotor installation inspection: Inspect the ABS sensor rotor for poor installation.

NO.5 DSC*2 OPERATES FREQUENTLY/DSC DOES NOT WORK CORRECTLY*2: DSC INDICATOR LIGHT GOES ON AND OFF WHILE DSC OPERATES [DSC]

E6U040300000W30

5	DSC (*2) operates frequently. /DSC does not work correctly. (*2): DSC indicator light goes on and off while DSC operates.

[TROUBLESHOOTING HINTS]
- DSC HU/CM detected malfunction (input and output device malfunction)
- Poor installation with combined sensor and/or steering angle sensor
  (If any of the above sensors are poorly installed, DSC may operate intermittently)
- When replacing DSC HU/CM, combined sensor or steering angle sensor, initialization is not performed.
  (If initialization is not performed correctly, DSC may not work correctly)

Diagnostic procedure

STEP	INSPECTION		ACTION
1	**INSPECT DSC HU/CM FOR DTCS** • Inspect the DTC for the DSC ON-BOARD DIAGNOSTIC SYSTEM. • Have DTCs been recorded in memory?	Yes	Perform inspection using appropriate DTC.
		No	Go to next step.
2	**VERIFY THAT EACH SENSOR IS INSTALLED** • Are combined sensor and steering angle sensor securely installed?	Yes	Go to next step.
		No	Install malfunctioning sensor securely.
*3	**VERIFY THAT EACH SENSOR IS INITIALIZED** • Did each sensor initialize after replacement of DTC HU/CM, combined sensor or steering angle sensor?	Yes	Find malfunctioning part according to "INTERMITTENT CONCERN TROUBLESHOOTING."
		No	Perform initialization procedure.

NO.6 DSC INDICATOR LIGHT FLASHES (WHEN NEITHER THE TCS NOR THE DSC ARE OPERATING) [DSC]

E6U040300000W31

6	DSC indicator light flashes (when neither the TCS nor the DSC are operating)

[TROUBLESHOOTING HINTS]
- Non-completion of module configuration.
  (If the module configuration is not carried out after replacing the DSC HU/CM, a DSC indicator light will flash. In this case, the DSC is not detected.)

04–10 GENERAL PROCEDURES

GENERAL PROCEDURES
(BRAKES) 04–10–1
Wheel and Tire Installation 04–10–1
Brake Lines Disconnection..... 04–10–1
Brake Pipe Flare Nut Tightening 04–10–1
Connector Disconnection 04–10–1
ABS/DSC Related Parts 04–10–1
DSC Related Parts Sensor Initialization Procedure 04–10–1

GENERAL PROCEDURES (BRAKES)

Wheel and Tire Installation

1. When installing the wheels and tires, tighten the wheel nuts in a criss-cross pattern to the following tightening torque.

Tightening torque
88—118 N·m {9.0—12.0 kgf·m, 65.0—87.0 ft·lbf}

E6U041000000W02

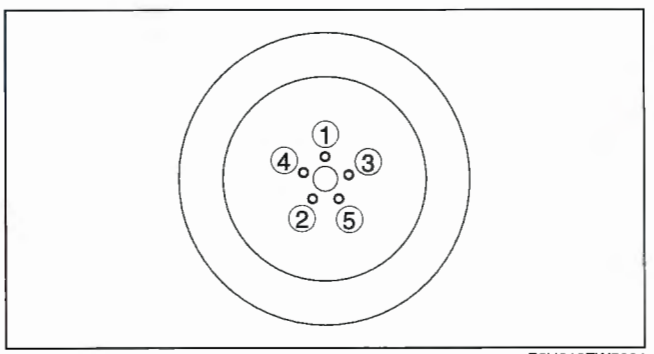

E5U610ZW5001

Brake Lines Disconnection

1. If any brake line has been disconnected during the procedures, add brake fluid, bleed the brakes, and inspect for leakage after the procedure has been completed.

Caution
- **Brake fluid will damage painted surfaces. Be careful not to spill any on painted surfaces. If it is spilled, wipe it off immediately.**

Brake Pipe Flare Nut Tightening

1. Tighten the brake pipe flare nut using the **SST** (49 0259 770B) or any commercially available flare nut wrench.

Connector Disconnection

1. Disconnect the negative battery cable before performing any work that requires handling of connectors. (See 01–17A–1 BATTERY REMOVAL/INSTALLATION [L3, AJ].) (See 01–17B–2 BATTERY REMOVAL/INSTALLATION [L3 WITH TC].)

ABS/DSC Related Parts

1. Make sure that there are no DTCs in the ABS/DSC memory after working on ABS/DSC related parts. If there are any DTCs in the memory, clear them.

DSC Related Parts Sensor Initialization Procedure

Warning
- **If the initialization procedure is not completed, the DSC will not operate properly and it might cause an unexpected accident. Therefore, when replacing or removing the following parts, make sure to perform the initialization procedure to ensure proper DSC operation.**

1. When replacing or removing the following parts, perform the initialization procedure. (See 04–15–14 COMBINED SENSOR INITIALIZATION PROCEDURE.)
   — DSC HU/CM
   — Combined sensor

04–11 CONVENTIONAL BRAKE SYSTEM

CONVENTIONAL BRAKE LOCATION INDEX [L3, AJ] 04–11–2
CONVENTIONAL BRAKE LOCATION INDEX [L3 WITH TC] 04–11–3
AIR BLEEDING [L3, AJ] 04–11–4
AIR BLEEDING [L3 WITH TC] 04–11–4
VACUUM HOSE CHECK VALVE INSPECTION (POWER BRAKE UNIT) 04–11–5
BRAKE PEDAL INSPECTION 04–11–6
Brake Pedal Height Inspection 04–11–6
Brake Pedal Height Adjustment 04–11–6
Brake Pedal Play Inspection 04–11–6
Brake Pedal Play Adjustment 04–11–7
Pedal-to-floor Clearance Inspection ... 04–11–7
BRAKE PEDAL REMOVAL/INSTALLATION 04–11–8
Brake switch Installation Note 04–11–8
Brake Switch Connector Installation Note 04–11–8
BRAKE SWITCH INSPECTION 04–11–9
MASTER CYLINDER REMOVAL/INSTALLATION 04–11–9
Master Cylinder Installation Note 04–11–9
MASTER CYLINDER DISASSEMBLY/ASSEMBLY 04–11–11
Stop Screw and O-ring (without ABS/TCS or DSC) Assembly Note 04–11–12
Stop Pin and O-ring (with ABS/TCS or DSC) Assembly Note 04–11–12
BRAKE FLUID LEVEL SENSOR INSPECTION 04–11–12
POWER BRAKE UNIT INSPECTION 04–11–13
Power Brake Unit Function Check (Simple Method) 04–11–13
Power Brake Unit Function Check (Inspection Using The Testers) 04–11–13
POWER BRAKE UNIT REMOVAL/INSTALLATION 04–11–14
DUAL PROPORTIONING VALVE INSPECTION (WITHOUT ABS/TCS OR DSC) 04–11–15
DUAL PROPORTIONING VALVE (WITHOUT ABS/TCS OR DSC) AND BRAKE PIPE JOINT (WITH ABS/TCS OR DSC) REPLACEMENT 04–11–16
Dual Proportioning Valve (Without ABS/TCS or DSC) or Brake Pipe Joint (With ABS/TCS or DSC) Installation Note 04–11–16
FRONT BRAKE (DISC) INSPECTION 04–11–16
Brake Judder Repair Hints 04–11–16
Disc Plate Thickness Inspection 04–11–18
Disc Pad Thickness Inspection 04–11–18
FRONT BRAKE (DISC) REMOVAL/INSTALLATION [L3, AJ] 04–11–19
Disc Pad Installation Note 04–11–20
FRONT BRAKE (DISC) REMOVAL/INSTALLATION [L3 WITH TC] 04–11–20
Disc Pad Installation Note 04–11–21
Retaining Clip Installation Note 04–11–21
DISC PAD (FRONT) REPLACEMENT [L3, AJ] 04–11–22
DISC PAD (FRONT) REPLACEMENT [L3 WITH TC] 04–11–23
CALIPER (FRONT) DISASSEMBLY/ASSEMBLY [L3, AJ] 04–11–24
Piston Disassembly Note 04–11–24
Piston Seal Disassembly Note 04–11–24
CALIPER (FRONT) DISASSEMBLY/ASSEMBLY [L3 WITH TC] 04–11–25
Piston Disassembly Note 04–11–25
Piston Seal Disassembly Note 04–11–25
REAR BRAKE (DISC) INSPECTION 04–11–26
Brake Judder Repair Hints 04–11–26
Disc Plate Thickness Inspection 04–11–28
Disc Pad Thickness Inspection 04–11–28
REAR BRAKE (DISC) REMOVAL/INSTALLATION 04–11–29
Disc Pad Installation Note 04–11–30
DISC PAD (REAR) REPLACEMENT 04–11–30
CALIPER (REAR) DISASSEMBLY/ASSEMBLY 04–11–31
Piston Disassembly/Assembly Note 04–11–31

CONVENTIONAL BRAKE LOCATION INDEX [L3, AJ]

E6U041100000W01

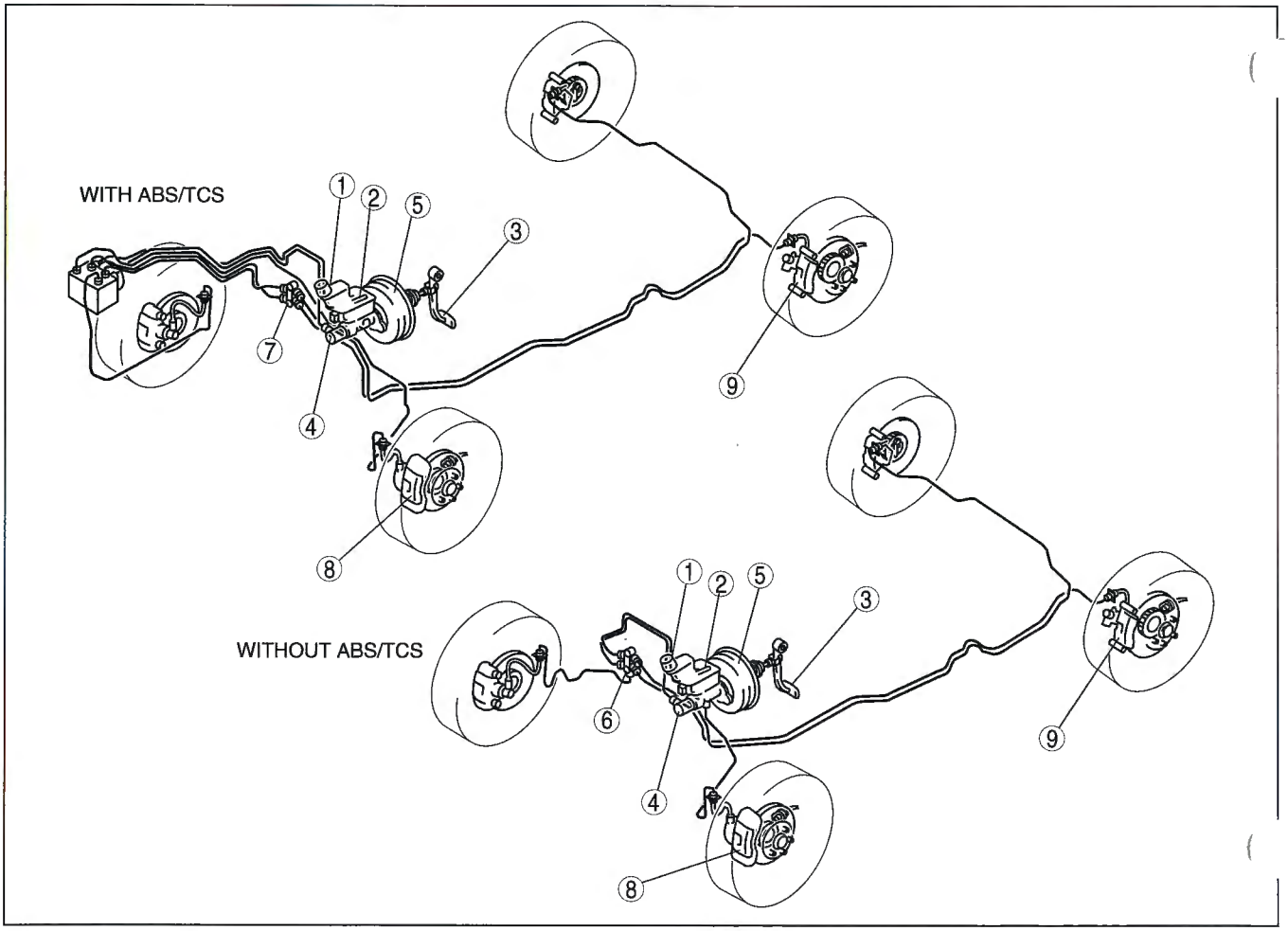

E6U411ZW5020

1	Brake fluid (See 04–11–4 AIR BLEEDING [L3, AJ].)
2	Vacuum hose (See 04–11–5 VACUUM HOSE CHECK VALVE INSPECTION (POWER BRAKE UNIT).)
3	Brake pedal (See04–11–6 BRAKE PEDAL INSPECTION) (See04–11–8 BRAKE PEDAL REMOVAL/ INSTALLATION) (See04–11–9 BRAKE SWITCH INSPECTION)
4	Master cylinder (See04–11–9 MASTER CYLINDER REMOVAL/ INSTALLATION) (See 04–11–12 BRAKE FLUID LEVEL SENSOR INSPECTION.) (See04–11–11 MASTER CYLINDER DISASSEMBLY/ASSEMBLY)
5	Power brake unit (See04–11–13 POWER BRAKE UNIT INSPECTION) (See04–11–14 POWER BRAKE UNIT REMOVAL/ INSTALLATION)

6	Dual proportioning valve (without ABS/TCS) (See04–11–15 DUAL PROPORTIONING VALVE INSPECTION (WITHOUT ABS/TCS OR DSC)) (See04–11–16 DUAL PROPORTIONING VALVE (WITHOUT ABS/TCS OR DSC) AND BRAKE PIPE JOINT (WITH ABS/TCS OR DSC) REPLACEMENT)
7	Brake pipe joint (with ABS/TCS) (See04–11–16 DUAL PROPORTIONING VALVE (WITHOUT ABS/TCS OR DSC) AND BRAKE PIPE JOINT (WITH ABS/TCS OR DSC) REPLACEMENT)
8	Front brake (disc) (See04–11–16 FRONT BRAKE (DISC) INSPECTION) (See04–11–19 FRONT BRAKE (DISC) REMOVAL/ INSTALLATION [L3, AJ]) (See04–11–24 CALIPER (FRONT) DISASSEMBLY/ASSEMBLY [L3, AJ])
9	Rear brake (disc) (See04–11–26 REAR BRAKE (DISC) INSPECTION) (See04–11–29 REAR BRAKE (DISC) REMOVAL/ INSTALLATION) (See04–11–31 CALIPER (REAR) DISASSEMBLY/ ASSEMBLY)

CONVENTIONAL BRAKE LOCATION INDEX [L3 WITH TC]

E6U041100000W02

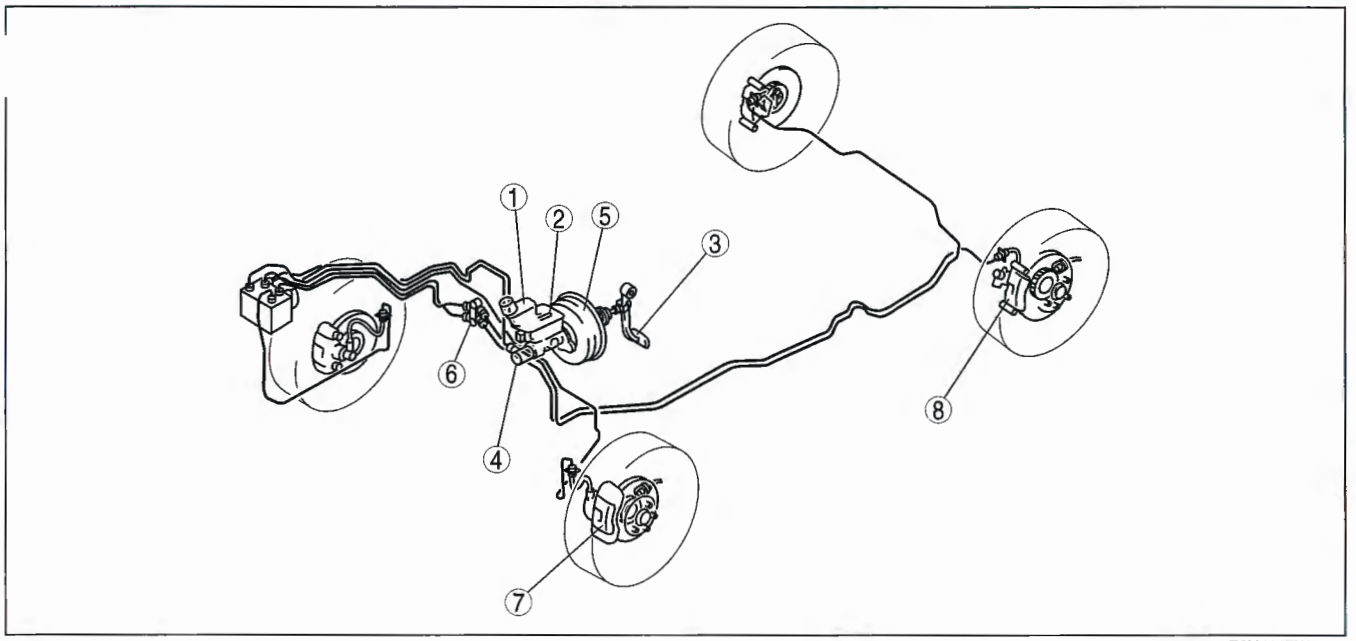

E6U411ZWB001

1	Brake fluid (See 04–11–4 AIR BLEEDING [L3 WITH TC].)
2	Vacuum line (See 04–11–5 VACUUM HOSE CHECK VALVE INSPECTION (POWER BRAKE UNIT).)
3	Brake pedal (See04–11–6 BRAKE PEDAL INSPECTION) (See04–11–8 BRAKE PEDAL REMOVAL/INSTALLATION) (See04–11–9 BRAKE SWITCH INSPECTION)
4	Master cylinder (See04–11–9 MASTER CYLINDER REMOVAL/INSTALLATION) (See04–11–12 BRAKE FLUID LEVEL SENSOR INSPECTION) (See04–11–11 MASTER CYLINDER DISASSEMBLY/ASSEMBLY)
5	Power brake unit (See04–11–13 POWER BRAKE UNIT INSPECTION) (See04–11–14 POWER BRAKE UNIT REMOVAL/INSTALLATION)
6	Brake pipe joint (See04–11–16 DUAL PROPORTIONING VALVE (WITHOUT ABS/TCS OR DSC) AND BRAKE PIPE JOINT (WITH ABS/TCS OR DSC) REPLACEMENT)
7	Front brake (disc) (See04–11–16 FRONT BRAKE (DISC) INSPECTION) (See04–11–20 FRONT BRAKE (DISC) REMOVAL/INSTALLATION [L3 WITH TC]) (See04–11–25 CALIPER (FRONT) DISASSEMBLY/ASSEMBLY [L3 WITH TC])
8	Rear brake (disc) (See04–11–26 REAR BRAKE (DISC) INSPECTION) (See04–11–29 REAR BRAKE (DISC) REMOVAL/INSTALLATION) (See04–11–31 CALIPER (REAR) DISASSEMBLY/ASSEMBLY)

AIR BLEEDING [L3, AJ]

E6U041143001W01

Caution
- **Brake fluid will damage painted surfaces. Be careful not to spill any on painted surfaces. If it is spilled, wipe it off immediately.**

Note
- Keep the fluid level in the reserve tank at 3/4 full or more during the air bleeding.
- Begin air bleeding with the brake caliper that is furthest from the master cylinder.

Brake fluid type
SAE J1703, FMVSS 116 DOT-3

1. Remove the bleeder cap and attach a vinyl tube to the bleeder screw.
2. Place the other end of the vinyl tube in a clear, fluid-filled container.
3. One person should depress the brake pedal a few times, and then hold it in the depressed position.
4. A second person should loosen the bleeder screw, drain out the fluid and close the screw using the **SST**.

   Tightening torque
   6.9—9.8 N·m {71—99 kgf·cm, 62—86 in·lbf}

5. Repeat steps 3 and 4 until no air bubbles are seen.
6. Bleed air from each component by following the procedure above.
7. After air bleeding, check the following:
   - Brake operation
   - Fluid leakage
   - Fluid level

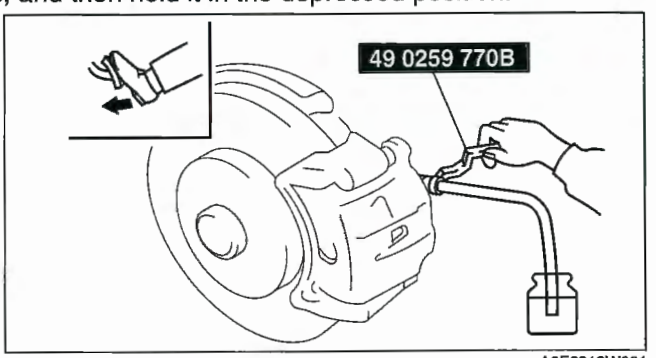

A6E6912W001

AIR BLEEDING [L3 WITH TC]

E6U041143001W02

Caution
- **Brake fluid will damage painted surfaces. Be careful not to spill any on painted surfaces. If it is spilled, wipe it off immediately.**

Note
- Keep the fluid level in the reserve tank at 3/4 full or more during the air bleeding.
- Begin air bleeding with the brake caliper that is furthest from the master cylinder.

Brake fluid type
SAE J1703, FMVSS 116 DOT-3

1. Remove the bleeder cap on the brake caliper, and attach a vinyl tube to the bleeder screw.
2. Place the other end of the vinyl tube in a clear container and fill the container with fluid during air bleeding.
3. Working with two people, one should pump the brake pedal several times and depress and hold the pedal down.

4. While the brake pedal is depressed, the other should loosen the bleeder screw using the **SST** or any commercially available flare nut wrench, drain out any fluid containing air bubbles, and tighten the bleeder screw.

   Tightening torque
   Front: 7.0—9.0 N·m {72—91 kgf·cm, 70—79 in·lbf}
   Rear: 6.9—9.8 N·m {71—99 kgf·cm, 62—86 in·lbf}

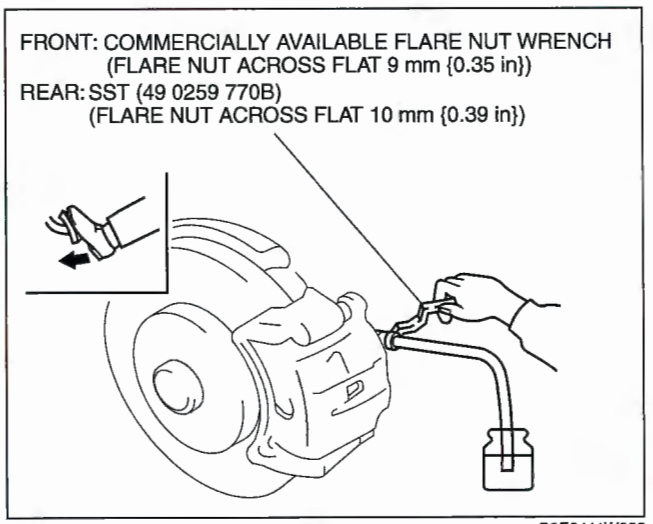

B3E0411W020

5. Repeat Steps 3 and 4 until no air bubbles are seen.
6. Perform air bleeding as described in the above procedures for all brake calipers.
7. After air bleeding, inspect the following:
   - Brake operation
   - Fluid leakage
   - Fluid level

VACUUM HOSE CHECK VALVE INSPECTION (POWER BRAKE UNIT)

E6U041143640W01

1. Remove the clamps and vacuum hose (power brake unit side).
2. For engine side, insert a small flathead screwdriver in the direction of the arrow shown in the figure, push the ring down and remove the vacuum hose. (L3, L3 WITH TC)
3. Remove the clamps and vacuum hose (engine-side). (AJ)

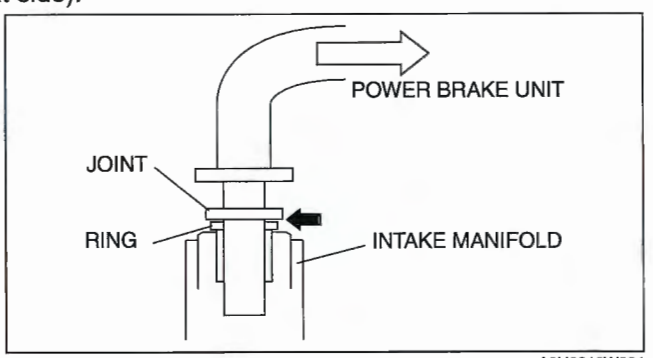

A6U6912W301

4. Apply both suction and pressure to the engine-side hose, and verify that air blows only toward that side.
   - If air flows in both directions or not at all, replace the vacuum hose.

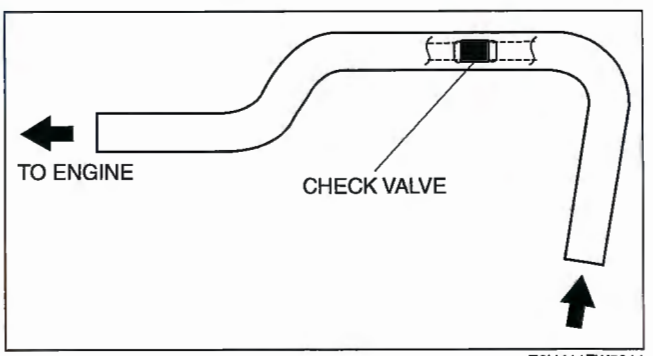

E6U411ZW5011

BRAKE PEDAL INSPECTION

E6U041143300W01

Brake Pedal Height Inspection

1. Verify that the distance from the insulator to the center of the upper surface of the pedal pad is as specified.

   Brake pedal height (reference value)
   187 mm {7.36 in}

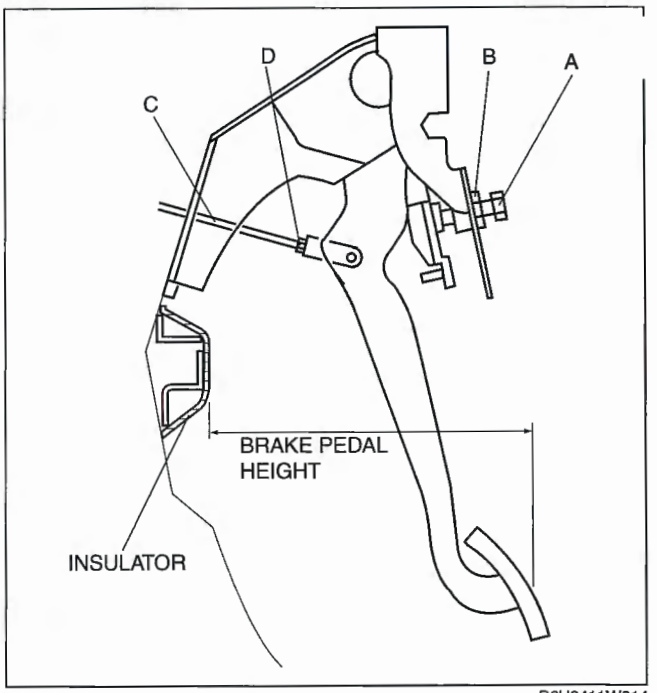

B6U0411W014

Brake Pedal Height Adjustment

Caution
- **The brake switch may not operate normally after adjusting the pedal height. Whenever adjusting the pedal height, replace the brake switch with a new one.**

1. Loosen locknut B and turn the bolt A until it does not contact the pedal.
2. Loosen locknut D and turn rod C to adjust the height.
3. Tighten the bolt with locknut B.

   Tightening torque
   9.8—14.7 N·m
   {100—149 kgf·cm, 116—130 in·lbf}

4. After adjustment, inspect the pedal play and the brake light operation.

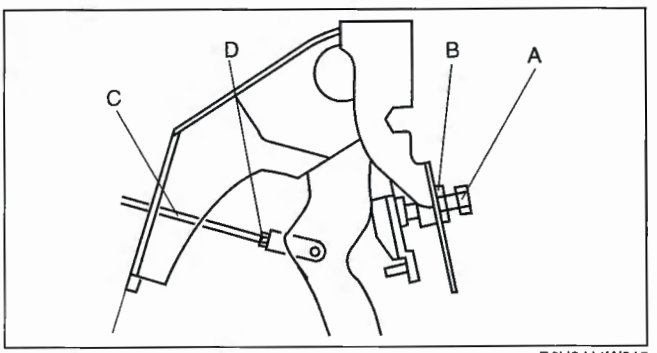

B6U0411W015

Brake Pedal Play Inspection

1. Depress the pedal a few times to eliminate the vacuum in the system.
2. Remove the spring pin, verify that the holes in the fork and in the pedal are aligned, and reinstall the pin. (See 04–11–8 BRAKE PEDAL REMOVAL/INSTALLATION.)
3. Gently depress the pedal by hand until resistance is felt, and check the pedal play.

   Brake pedal play
   0—3 mm {0—0.1 in}

Brake Pedal Play Adjustment

1. Remove the spring pin and clevis pin. (See 04–11–8 BRAKE PEDAL REMOVAL/INSTALLATION.)
2. Loosen locknut D and turn rod C to align the holes in the fork and in the pedal.
3. Install the clevis pin and the spring pin.
4. Tighten locknut D.

   Tightening torque
   15.7—21.6 N·m {1.60—2.20 kgf·m, 11.6—15.9 ft·lbf}

5. Check the pedal height and the brake light operation.

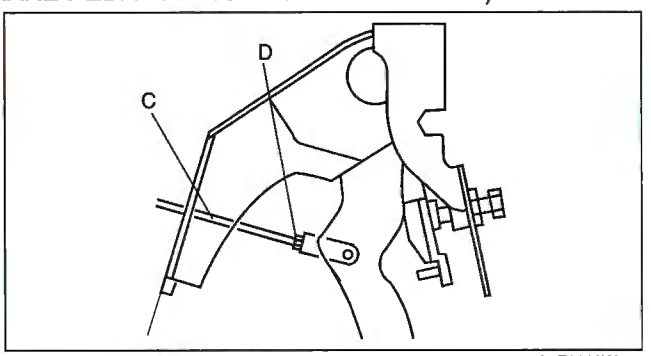

A6E6912W027

Pedal-to-floor Clearance Inspection

1. Start the engine and depress the brake pedal with a force of **147 N {15.0 kgf, 33.0 lbf}**
2. Verify that the distance from the floor panel to the pedal pad center is as specified when the pedal is depressed.
   - If the distance is less than specified, check for air in brake system.

   Brake pedal-to-floor clearance (Brake pedal when depressed at 147 N {15.0 kgf, 33 lbf})
   68 mm {2.7 in} min.

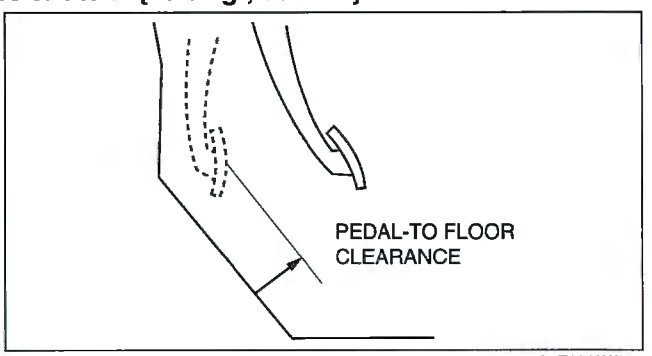

A6E6912W003

BRAKE PEDAL REMOVAL/INSTALLATION

E6U041143300W02

Caution

- **The clearance between the brake switch and the brake pedal is automatically adjusted to the correct amount when the brake switch connector is connected after the brake switch has been properly installed. If the brake switch is not properly installed or the connector is connected before installation, the clearance may be incorrect, causing a brake light malfunction. Therefore, always verify that the brake switch is properly installed before connecting the connector.**
- **Once the brake switch clearance has automatically been adjusted, it cannot be adjusted again. Therefore, replace the switch with a new one when replacing the power brake unit or the pedal, or performing any procedure that changes the pedal stroke.**

1. For models with an interlock cable unit, remove the lock unit with the brake switch.
2. Remove in the order indicated in the table.

1	Brake switch connector (See 04–11–8 Brake Switch Connector Installation Note)
2	Spring pin
3	Clevis pin
4	Brake pedal
5	Brake switch (See 04–11–8 Brake switch Installation Note)
6	Pedal pad

3. Install in the reverse order of removal.

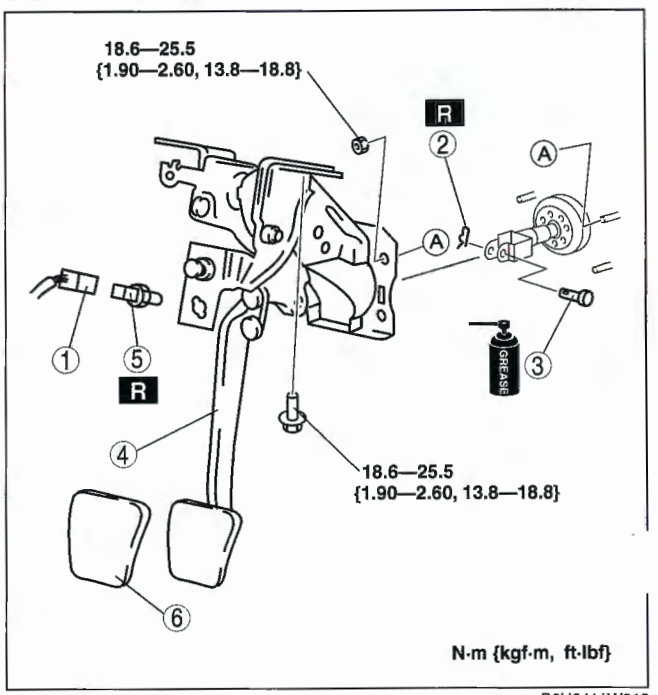

B6U0411W018

Brake switch Installation Note

1. Fix the new brake switch on the brake pedal bracket or interlock cable unit by pressing down at **50 N {5.1 kgf, 11 lbf}**.
2. Rotate the brake switch **45°** counterclockwise (without interlock cable unit) or clockwise (with interlock cable unit).
3. Verify that the brake switch is locked securely.

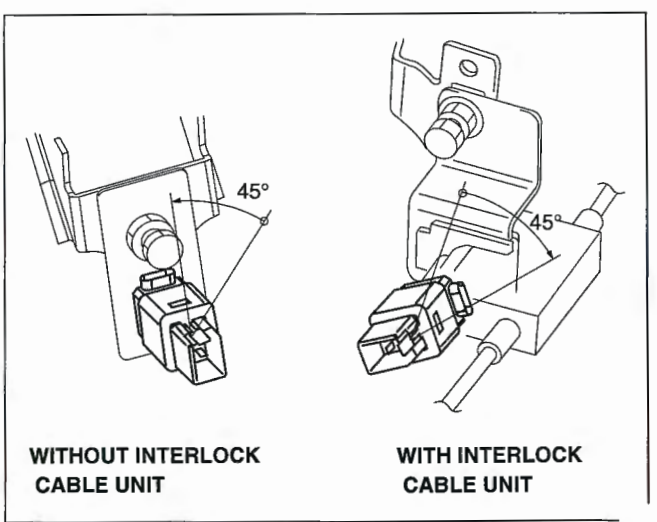

B6U0411V

Brake Switch Connector Installation Note

1. Inspect the brake pedal. (See 04–11–6 BRAKE PEDAL INSPECTION.)
2. With the brake pedal in its original position, install the brake switch to the brake switch connector.

BRAKE SWITCH INSPECTION

E6U041166490W01

Caution
- **If the brake switch is removed from the brake pedal, its proper functioning cannot be guaranteed when reinstalled. Therefore, inspect the brake switch by either not removing the brake switch, or by replacing it if removed.**

1. Disconnect the negative battery cable.
2. Disconnect the brake switch connector.
3. Inspect for continuity between the brake switch connector terminals.
   - If not as specified, replace the brake switch.

O—O : Continuity

Condition	Terminal			
	A	B	C	D
When the brake pedal is depressed		O		O
When the brake pedal is not depressed (With auto cruise)	O		O	

D6E411ZW3009

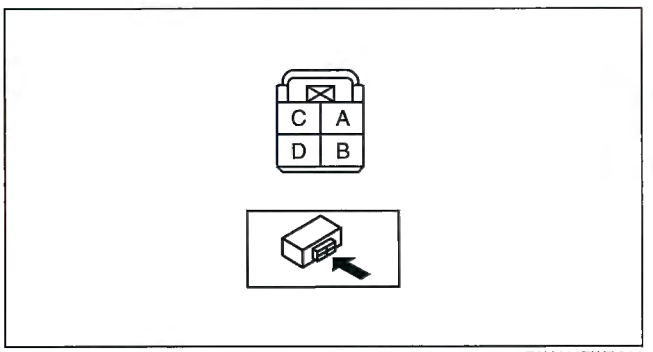

E6U411ZWB011

MASTER CYLINDER REMOVAL/INSTALLATION

E6U041143400W01

1. Remove the battery and battery tray. (See 01–17A–1 BATTERY REMOVAL/INSTALLATION [L3, AJ].) (See 01–17B–2 BATTERY REMOVAL/INSTALLATION [L3 WITH TC].)
2. Remove in the order indicated in the table.

1	Brake fluid level sensor connector
2	Brake pipe
3	Brake pipe (without ABS/TCS or DSC)
4	Hose (MTX)
5	Master cylinder (See 04–11–9 Master Cylinder Installation Note
6	O-ring

3. Install in the reverse order of removal.

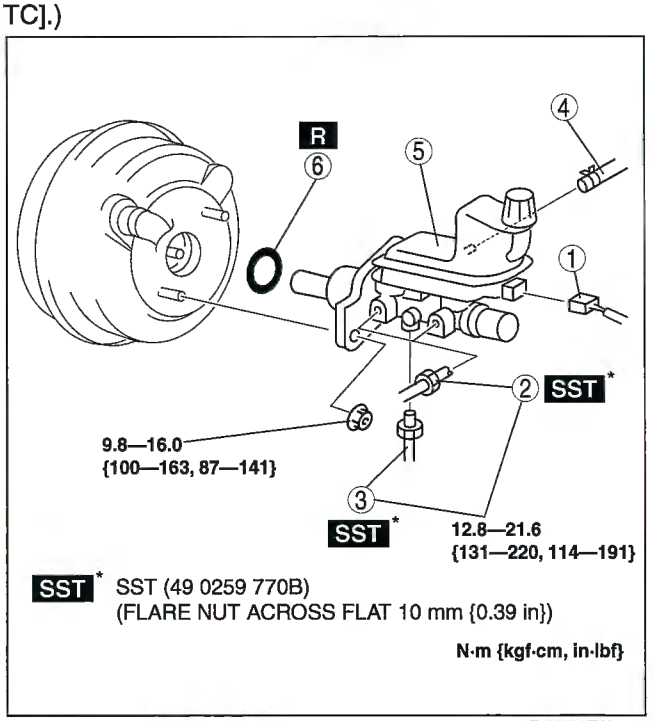

E6U411ZW5018

Master Cylinder Installation Note

Caution
- **If the master cylinder is installed at a slanted angle to the power brake unit, the master cylinder piston may jam against the push rod retainer of the power brake unit, causing improper air bleeding, brake drag or other malfunctions. Be sure to install the master cylinder at a level, perpendicular angle to the power brake unit.**
- **Always install the gasket of the power brake unit push rod before performing measurement inspections or adjustments.**

1. Install the **SST** to the power brake unit as shown, and tighten within the specified torque.

   Tightening torque
   9.8—16.0 N·m
   {100—163 kgf·cm, 87—141 in·lbf}

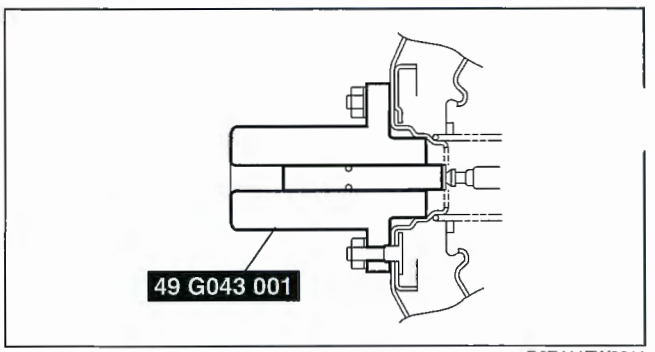

D6E411ZW3011

2. Using a vacuum gauge, create a vacuum pressure of **66.7 kPa {500 mmHg, 19.7 inHg}** in the power brake unit.

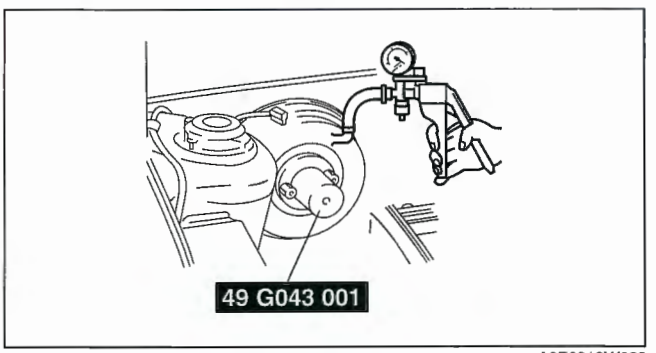

A6E6912W029

3. Using calipers, measure dimension L as shown.

   Specification
   25.9—26.1 mm {1.020—1.027 in}

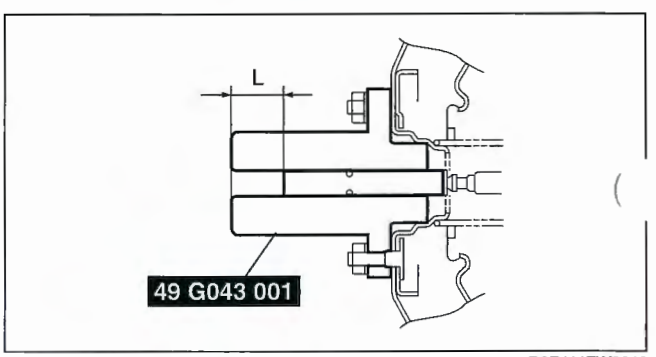

D6E411ZW3012

4. If dimension L is not within the specification as shown, remove **SST** (49 G043 001) and use **SST** (49 B043 004) to adjust the length of the push rod while using **SST** (49 E043 003A) to keep the push rod from rotating.
5. Remove the **SSTs**, replace **SST** (49 G043 001) and measure dimension L again.

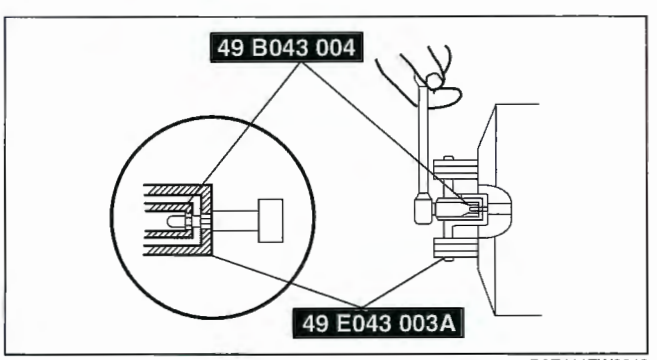

D6E411ZW3013

6. Install the master cylinder to the power brake unit.

   Caution
   - **If, after installing the master cylinder, air does not bleed properly from the brake lines even after performing air bleeding, brake drag occurs or other characteristics are present, it is possible that the master cylinder piston is jammed against the power brake unit. If air cannot be bled properly, brake drag exists or other malfunctions occur, remove the master cylinder and reinstall properly.**

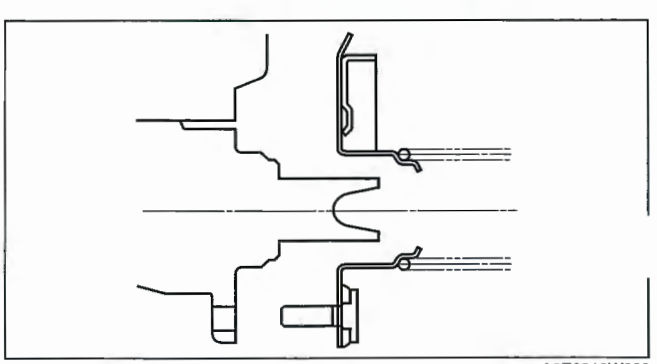
A6E6912W032

MASTER CYLINDER DISASSEMBLY/ASSEMBLY

E6U041143400W02

Caution

- **If the master cylinder body is damaged, replace the unit as a component. When securing the master cylinder in a vise, tighten only the flange of the master cylinder.**

1. Remove the battery and battery try. (See 01–17A–1 BATTERY REMOVAL/INSTALLATION [L3, AJ].) (See 01–17B–2 BATTERY REMOVAL/INSTALLATION [L3 WITH TC].)
2. Disassemble in the order indicated in the table.
3. Assemble in the reverse order of disassembly.

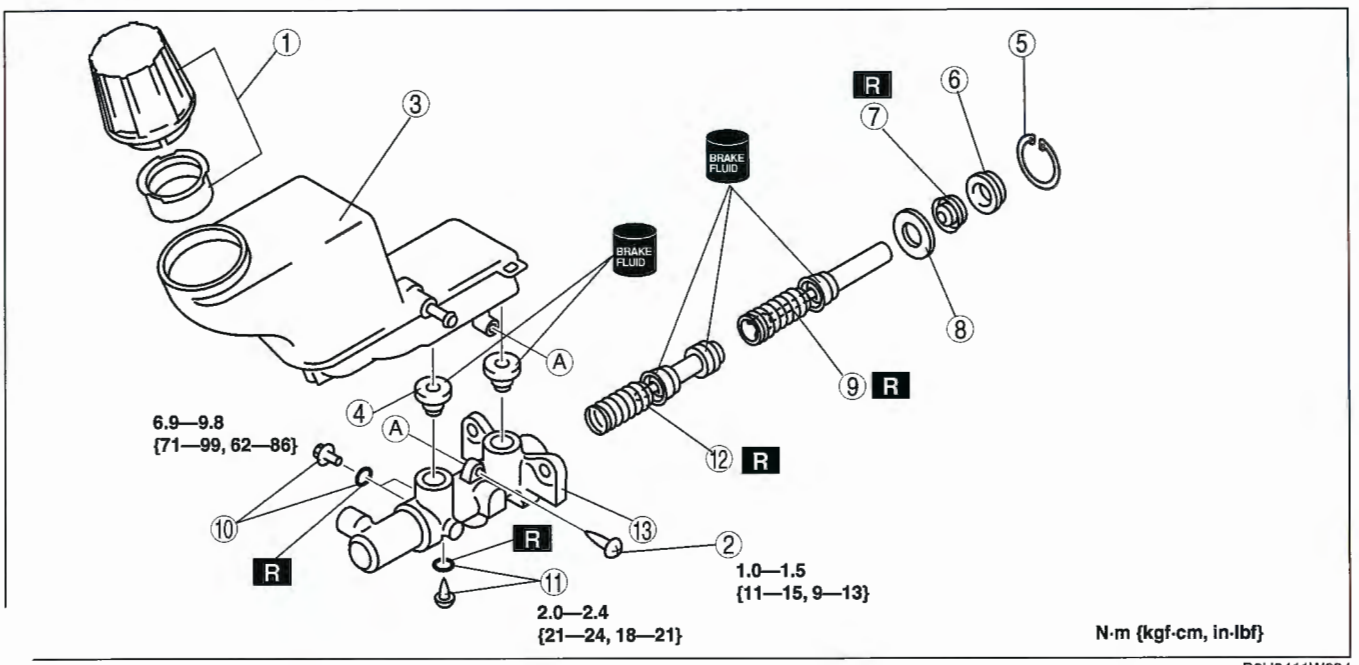

B6U0411W004

1	Cap set
2	Screw
3	Reservoir
4	Joint bushing
5	Snap ring
6	Piston guide
7	Cup
8	Stopper

9	Primary piston
10	Stop pin and O-ring (with ABS/TCS or DSC) (See 04–11–12 Stop Pin and O-ring (with ABS/TCS or DSC) Assembly Note)
11	Stop screw and O-ring (without ABS/TCS or DSC) (See04–11–12 Stop Screw and O-ring (without ABS/TCS or DSC) Assembly Note)
12	Secondary piston
13	Master cylinder body

Stop Screw and O-ring (without ABS/TCS or DSC) Assembly Note

1. Install the secondary piston and primary piston.
2. Install the new O-ring onto the stop screw.
3. Push the primary piston assembly in full.
4. Install and tighten the stop screw.

   Tightening torque
   2.0—2.4 N·m {21—24 kgf·cm, 18—21 in·lbf}

5. Push and release the secondary piston component to verify that it is held properly by the stop screw.

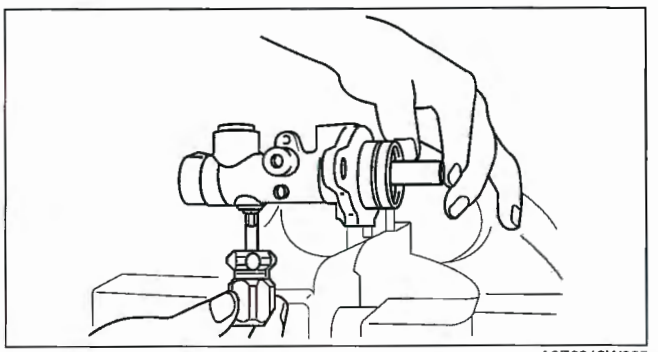

A6E6912W025

Stop Pin and O-ring (with ABS/TCS or DSC) Assembly Note

1. Install the secondary piston with the piston hole facing the stop pin and primary piston.
2. Install the new O-ring onto the stop pin.
3. Push the primary piston assembly in fully.
4. Install and tighten the stop pin.

   Tightening torque
   6.9—9.8 N·m {71—99 kgf·cm, 62—86 in·lbf}

5. Push and release the secondary piston component to verify that it is held properly by the stop pin.

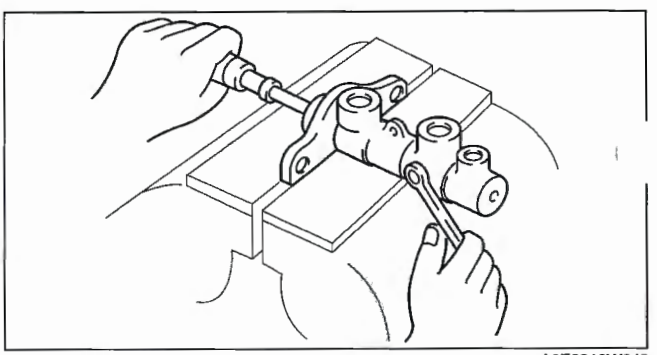

A6E6912W043

BRAKE FLUID LEVEL SENSOR INSPECTION

E6U041143400W05

1. Disconnect the negative battery cable.
2. Disconnect the sensor connector.
3. Inspect for continuity between terminals of fluid level sensor.
   - If not as specified, replace the fluid level sensor.

O—O : Continuity

Fluid level	A	B
Above approx. 3 mm {0.1 in} above MIN line		
Below approx. 3 mm {0.1 in} above MIN line	O	O

B6U0411W019

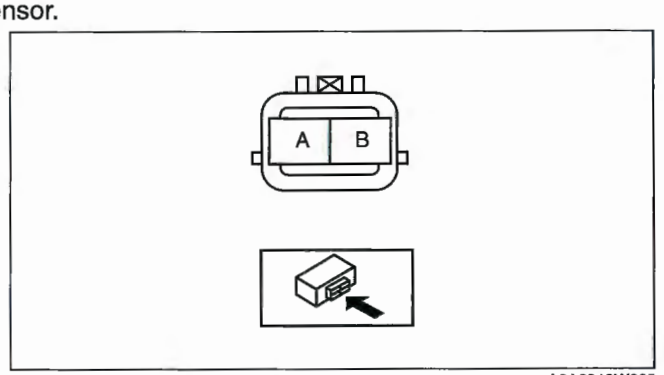

A6A6912W005

POWER BRAKE UNIT INSPECTION

E6U041143800W01

Warning
- **The following inspection methods are simple inspection methods to judge the function of the power brake unit.**
- **If there is a malfunction in the power brake unit, replace the power brake unit as a component.**

Power Brake Unit Function Check (Simple Method)

Step 1
1. With the engine stopped, depress the pedal a few times.
2. With the pedal depressed, start the engine.
3. If the pedal moves down slightly immediately after the engine starts, the unit is operating.

Step 2
1. Start the engine.
2. Stop the engine after it has run for **1 or 2 minutes**.
3. Depress the pedal with the usual force.
4. If the first pedal stroke is long and becomes shorter with subsequent strokes, the unit is operating.
   - If a problem is found, inspect for damage of the vacuum hose, and vacuum tank. Repair if necessary, and inspect it again.

Step 3
1. Start the engine.
2. Depress the pedal with usual force.
3. If the pedal height does not change, the unit is operating.
4. Hold the pedal down for **about 30 s**.
5. If the pedal height does not change, the unit is operating.

Power Brake Unit Function Check (Inspection Using The Testers)

1. Connect the **SSTs**, vacuum gauge, and pedal depression force gauge as shown in the figure to bleed the air from the **SSTs** and brake line. (Bleed the air from the **SSTs** using a air bleed valve A.)

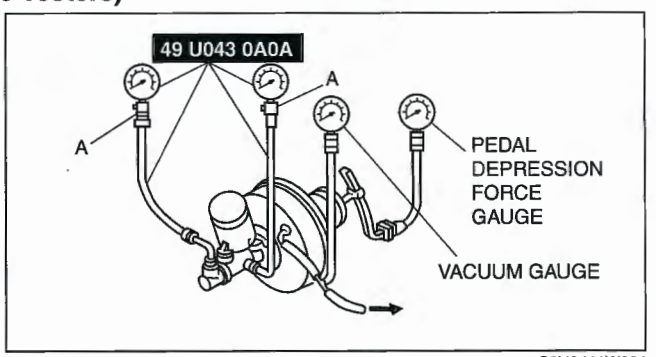

C6U0411W001

Checking for vacuum loss (unloaded condition)

1. Stop the engine when the vacuum gauge reading reaches **66.7 kPa {500 mmHg, 19.7 inHg}**.
2. Observe the vacuum gauge for **15 s**.
   - If the gauge shows **63.3—66.7 kPa {475—500 mmHg, 18.7—19.6 inHg}**, the unit is operating.
   - If not, inspect for damage on the check valve or vacuum hose, and examine the installation. Repair as necessary, and inspect it again.

Checking for vacuum loss (loaded condition)

1. Start the engine.
2. Depress the brake pedal with a force of **196 N {20 kgf, 44 lbf}**.
3. Stop the engine when the vacuum gauge reading reaches **66.7 kPa {500 mmHg, 19.7 inHg}**.
4. Observe the vacuum gauge for **15 s**.
5. If the gauge shows **63.3—66.7 kPa {475—500 mmHg, 18.7—19.6 inHg}**, the unit is operating.

Checking for hydraulic pressure

1. When the engine is stopped (vacuum **0 kPa {0 mmHg, 0 inHg}**) and the fluid pressure is within the specification, the unit is operating.

   Power brake unit fluid pressure when pedal depressed at 200 N {20 kgf, 44 lbf}
   At 0 kPa {0 mmHg, 0 inHg}: 590 kPa {6.02 kgf/cm^2, 85.6 psi}

2. Start the engine. Depress the brake pedal when the vacuum reaches **66.7 kPa {500 mmHg, 19.7 inHg}**.
   - If the fluid pressure is within the specification, the unit is operating.
   - If the fluid pressure is not as specified, inspect for damage to the check valve or vacuum hose, and fluid leakage of the hydraulic line. Repair as necessary, and inspect again.

   Power brake unit fluid pressure when pedal depressed at 200 N {20 kgf, 44 lbf}
   At 66.7 kPa {500 mmHg, 19.7 inHg}: 8,780 kPa {89.53 kgf/cm^2, 1,273 psi}

POWER BRAKE UNIT REMOVAL/INSTALLATION

E6U041143800W02

1. Remove the battery and battery try. (See 01–17A–1 BATTERY REMOVAL/INSTALLATION [L3, AJ].) (See 01–17B–2 BATTERY REMOVAL/INSTALLATION [L3 WITH TC].)
2. Remove the air cleaner (L3 WITH TC). (See 01–13B–4 INTAKE AIR SYSTEM REMOVAL/INSTALLATION [L3 WITH TC].)
3. Remove the air cleaner bracket (L3 WITH TC).
4. Remove the cooler pipe No.3 bracket.
5. Remove the master cylinder. (See 04–11–9 MASTER CYLINDER REMOVAL/INSTALLATION.)
6. Remove the windshield wiper arm and blade. (See 09–19–4 WINDSHIELD WIPER ARM AND BLADE REMOVAL/INSTALLATION.)
7. Remove the cowl grille. (See 09–16–4 COWL GRILLE REMOVAL/INSTALLATION [EXCEPT L3 WITH TC].) (See 09–16–4 COWL GRILLE REMOVAL/INSTALLATION [L3 WITH TC].)
8. Remove the windshield wiper motor. (See 09–19–5 WINDSHIELD WIPER MOTOR REMOVAL/INSTALLATION.)
9. Remove the cowl panel. (See 09–10–17 COWL PANEL REMOVAL/INSTALLATION.)
10. Remove in the order indicated in the table.

1	Vacuum hose
2	Snap pin
3	Clevis pin
4	Nut
5	Fork
6	Power brake unit
7	Gasket
8	Nut

11. Install in the reverse order of removal.

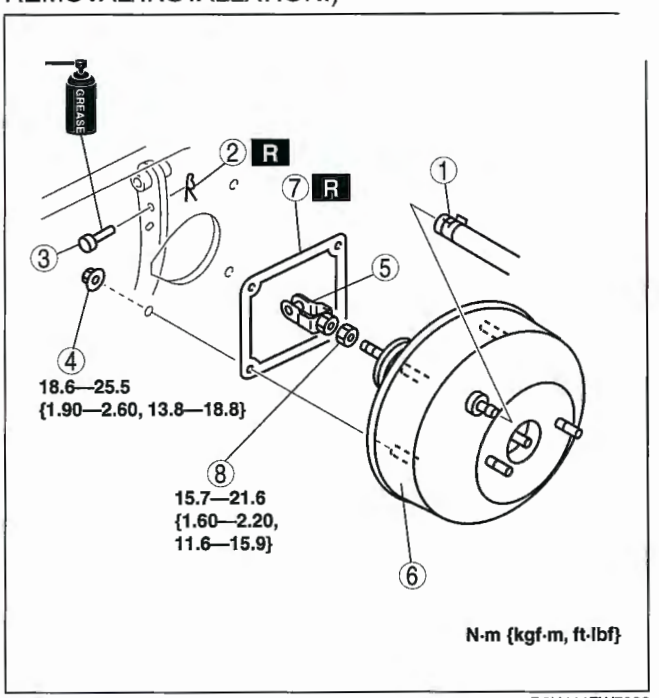

D6U411ZW7002

DUAL PROPORTIONING VALVE INSPECTION (WITHOUT ABS/TCS OR DSC)

E6U041143900W01

1. Connect the **SSTs** to the brake pipes as shown in the figure.
   Bleed the air from the brake system.
2. Measure the fluid pressure of the master cylinder and the rear brake.
   - If not within the specification, replace the dual proportioning valve.

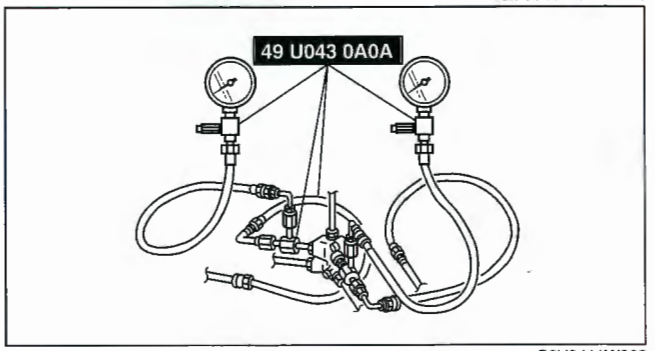

C6U0411W002

Dual proportioning valve fluid pressure (without ABS (ABS/TCS) or DSC)

Rear brake fluid pressure when front brake fluid pressure at 2,450 kPa {24.98 kgf/cm^2, 355.3 psi} (A): 2,250 kPa {22.95 kgf/cm^2, 326.4 psi} —2,650 kPa {27.02 kgf/cm^2, 384.3 psi} (A')

Rear brake fluid pressure when front brake fluid pressure at 5,880 kPa {60 kgf/cm^2, 853 psi} (B): 3,180 kPa {32.43 kgf/cm^2, 461.3 psi}—3,780 kPa {38.54 kgf/cm^2, 548.2 psi} (B')

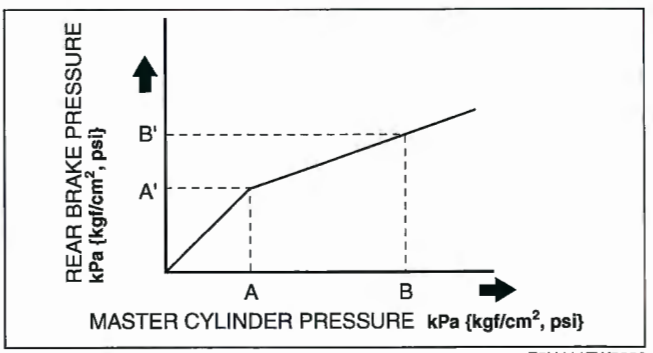

E5U411ZW5020

DUAL PROPORTIONING VALVE (WITHOUT ABS/TCS OR DSC) AND BRAKE PIPE JOINT (WITH ABS/TCS OR DSC) REPLACEMENT

1. Remove in the order indicated in the table.

1	Brake pipe
2	Bolt
3	Dual proportioning valve (without ABS/TCS or DSC) or brake pipe joint (with ABS/TCS or DSC) (See 04–11–16 Dual Proportioning Valve (Without ABS/TCS or DSC) or Brake Pipe Joint (With ABS/TCS or DSC) Installation Note)

2. Install in the reverse order of removal.

E6U041143900W02

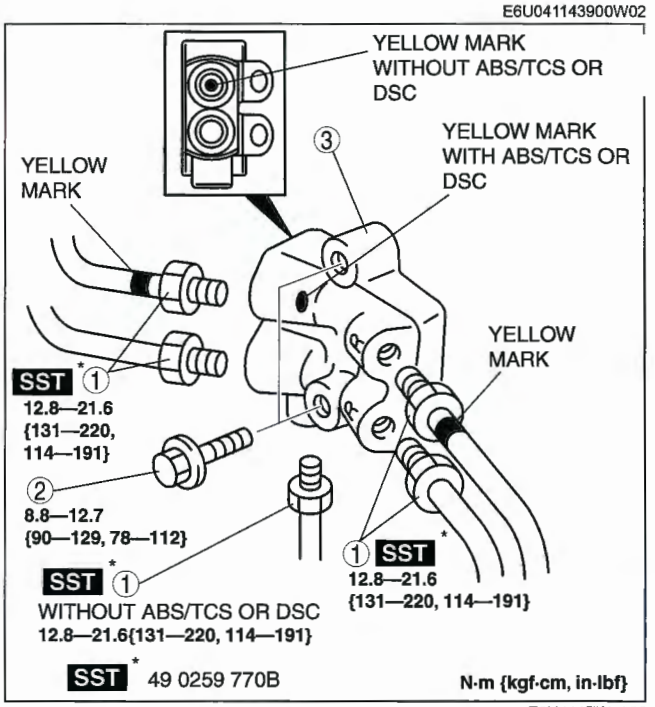

E6U411ZW7002

Dual Proportioning Valve (Without ABS/TCS or DSC) or Brake Pipe Joint (With ABS/TCS or DSC) Installation Note

1. Install the dual proportioning valve (without ABS/TCS or DSC) or brake pipe joint (with ABS/TCS or DSC) so that the R mark faces the left side of the vehicle.

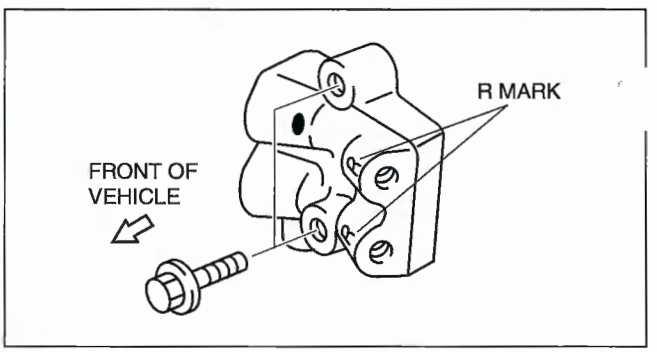

B6U0411W007

FRONT BRAKE (DISC) INSPECTION

E6U041133980W01

Brake Judder Repair Hints

Description

1. Brake judder concern has the following 3 characteristics:

Steering wheel vibration

1. Steering wheel vibrates in the rotation direction. This characteristic is most noticeable when applying brakes at a vehicle speed of **100—140 km/h {62.1—86.8 mph}**.

Floor vibration

1. When applying the brakes, the vehicle body shakes back and forth. The seriousness of the shaking is not influenced by vehicle speed.

Brake pedal vibration

1. When applying brakes, a pulsating force tries to push the brake pad back. The pulsation is transmitted to the brake pedal.
2. The following are the main possible causes of brake judder:

Due to an excessive runout (side-to-side wobble) of the disc plate, the thickness of the disc plate is uneven.

1. If the runout is **more than 0.05 mm {0.002 in}** at the position **10 mm {0.39 in}** from the disc plate edge, uneven wear occurs on the disc plate because the pad contacts the plate unevenly.
2. If the runout is **less than 0.05 mm {0.002 in}**, uneven wear does not occur.

The disc plate is deformed by heat.

1. Repeated panic braking may raise the temperature in some portions of disc plate by **approx. 1,000 °C {1,832 °F}**. This results in a deformed disc plate.

.e to corrosion, the thickness and friction coefficient of disc plate change.

1. If a vehicle is parked in damp conditions for a long time, corrosion occurs on the friction surface of disc plate.
2. The thickness of corrosion is uneven and sometimes appears like a wave pattern, which changes the friction coefficient and causes a reaction force.

Inspection and repair procedure

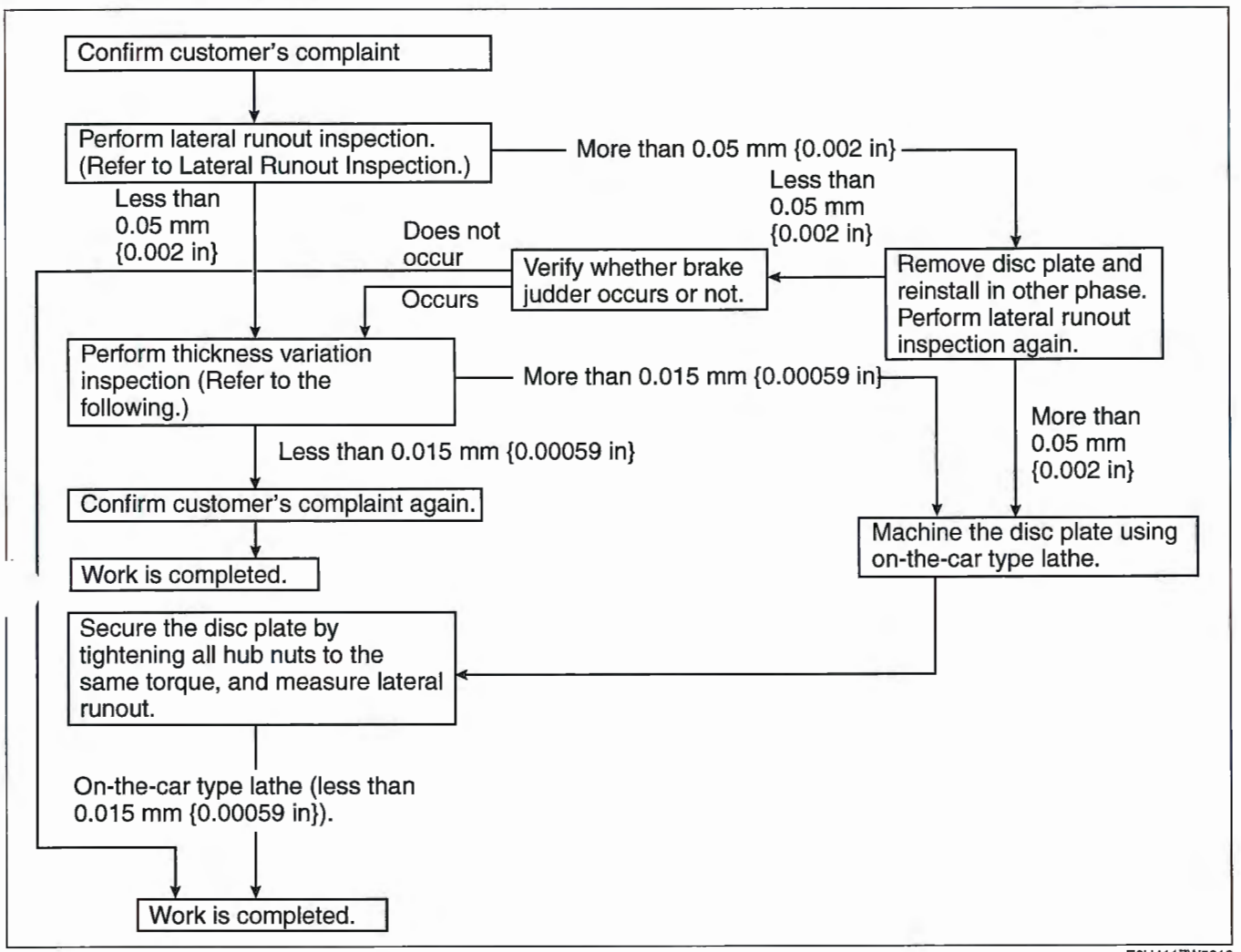

E6U411ZW5010

Lateral runout inspection

1. To secure the disc plate and the hub, tighten the hub nuts upside down or insert a washer (thickness **10 mm {0.39 in}**, inner diameter **more than 12 mm {0.47 in}**) between the hub bolt and the hub nut.

Note

- The component parts of the **SST** (49 B017 001 or 49 G019 003) can be used as a suitable washer.

2. After tightening all the hub nuts to the same torque, put the dial gauge on the friction surface of disc plate **10 mm {0.39 in}** from the disc plate edge.
3. Rotate the disc plate one time and measure the runout.

Front disc plate runout limit
0.05 mm {0.002 in}

Thickness variation inspection

1. Clean the disc plate-to-pad friction surface using a brake cleaner.
2. Measure the points indicated in the illustration using a caliper (micrometer).
3. Subtract the minimum value from the maximum, and if the result is not within specification, machine the disc plate using a lathe.

Thickness variation limit
0.015 mm {0.0005 in}

Warning
- **Do not exceed minimum disc plate thickness.**

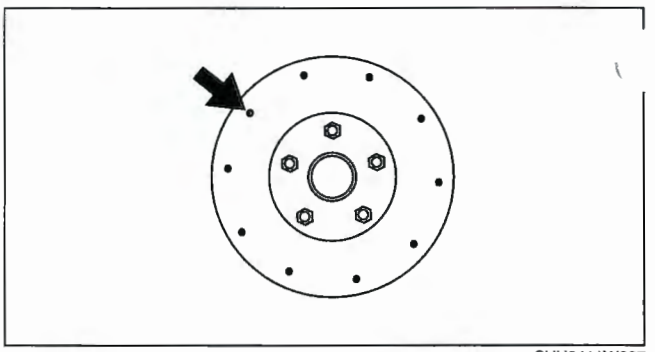

CHU0411W027

Disc Plate Thickness Inspection

Caution
- **Excessive runout may result if the disc plate is removed from the vehicle then machined. Machine the disc plate while installed on the vehicle.**

1. Measure the thickness of the disc plate.
   - If the thickness is not within the specification, replace the disc plate.

Minimum front disc plate thickness
23 mm {0.91 in}

Minimum front disc plate thickness after machining using a brake lathe on-vehicle
23.8 mm {0.94 in}

Disc Pad Thickness Inspection

1. Jack up the front of the vehicle and support it with safety stands.
2. Remove the wheel and tires.
3. Verify the remaining thickness of the pads.

Minimum front disc pad thickness
L3, AJ: 2.0 mm {0.079 in} min.
L3 WITH TC: 1.5 mm {0.059 in} min.

4. Replace the pads as a set: right and left wheels, if either one is at or less than the minimum thickness.

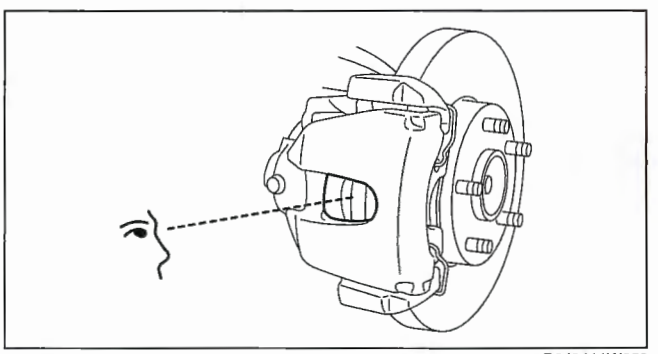

B3J0411W059

FRONT BRAKE (DISC) REMOVAL/INSTALLATION [L3, AJ]

E6U041133980W02

1. Remove in the order indicated in the table.
2. Install in the reverse order of removal.
   After installation, depress the pedal a few times, rotate the wheel by hand, and verify that the brake does not drag.

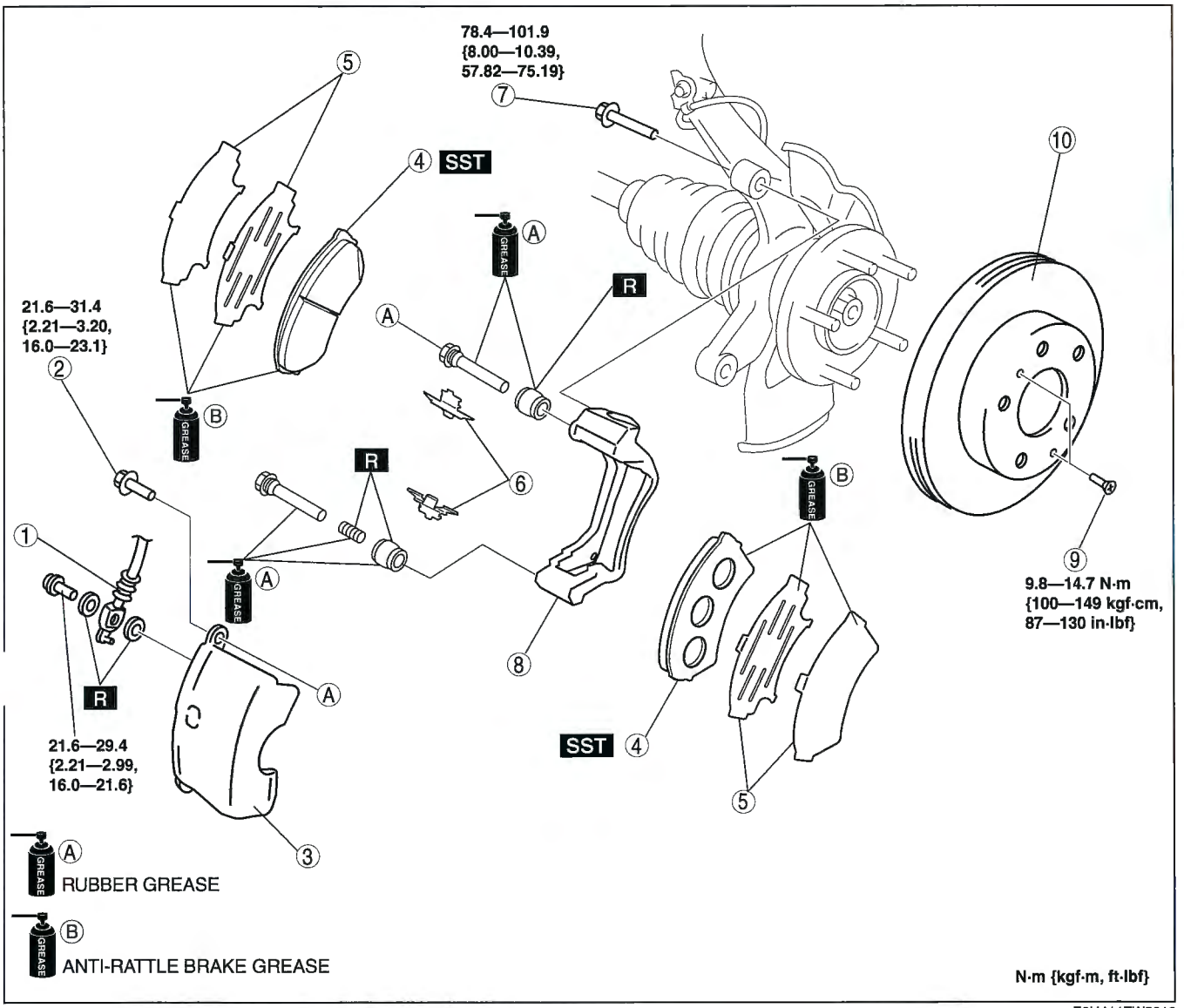

E6U411ZW5012

1	Flexible hose
2	Bolt
3	Caliper
4	Disc pad (See 04–11–20 Disc Pad Installation Note)
5	Shim

6	Guide plate
7	Bolt
8	Mounting support
9	Screw
10	Disc plate

Disc Pad Installation Note

1. Push the piston fully inward using the **SST**.
2. Install the disc pad.

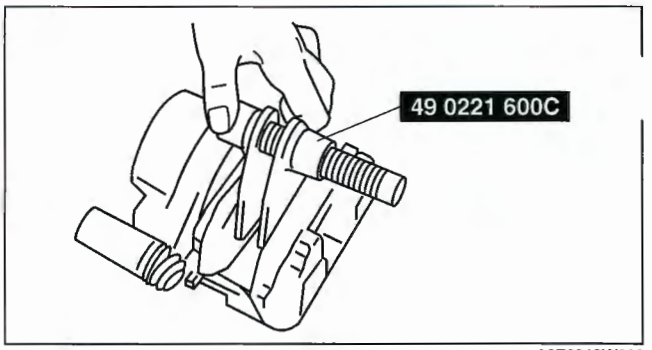

A6E6912W038

FRONT BRAKE (DISC) REMOVAL/INSTALLATION [L3 WITH TC]

E6U041133980W03

1. Remove in the order indicated in the table.
2. Install in the reverse order of removal.
3. After installation, depress the pedal a few times, rotate the wheel by hand, and verify that the brake does not drag.

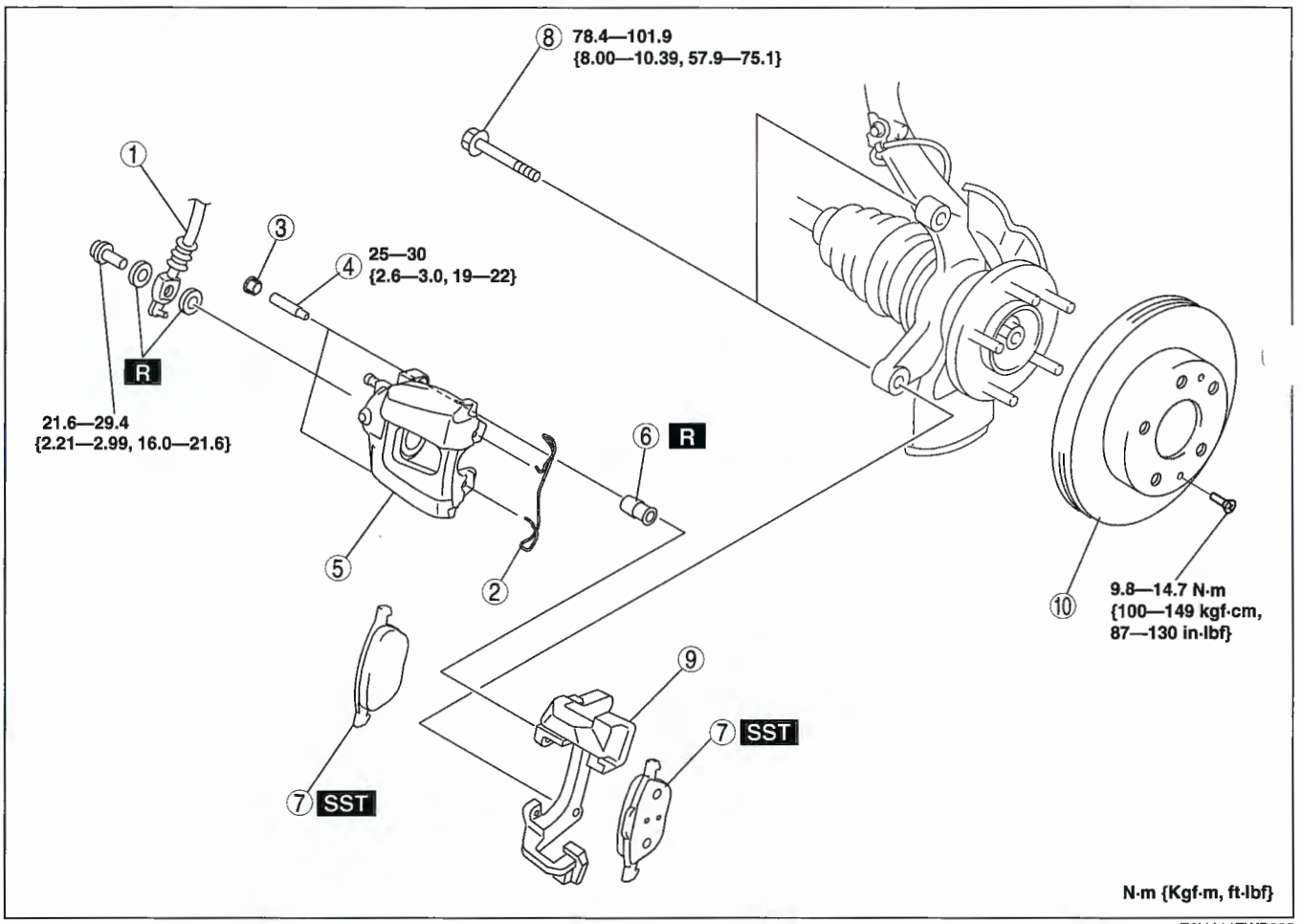

E6U411ZWB005

1	Brake hose
2	Retaining clip (See 04–11–21 Retaining Clip Installation Note.)
3	Cap
4	Bolt
5	Caliper

6	Boot
7	Disc pad (See 04–11–21 Disc Pad Installation Note)
8	Bolt
9	Mounting support
10	Disc plate

Disc Pad Installation Note

1. Push the piston fully inward using the **SST**.
2. Install the disc pad.

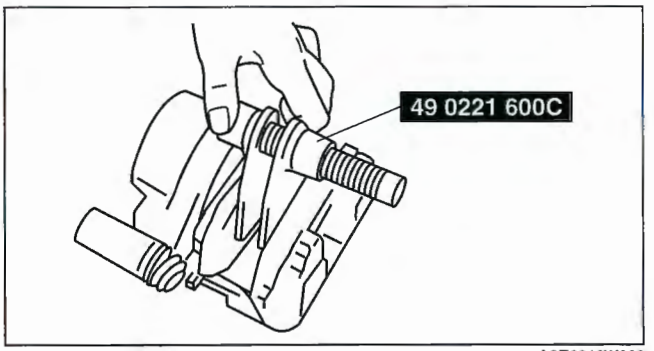

A6E6912W038

Retaining Clip Installation Note

1. Temporarily install the retaining clip to the caliper and mounting support as shown in the figure.

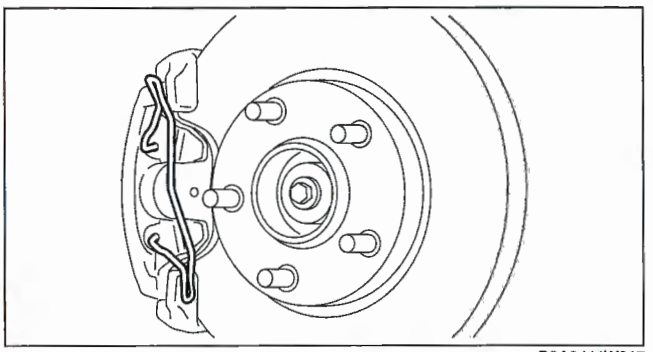

B3A0411W017

2. Secure the retaining clip so that part A does not slip off from the caliper while installing part B to the mounting support.
   Verify that the retaining clip is securely installed to the caliper and the mounting support.

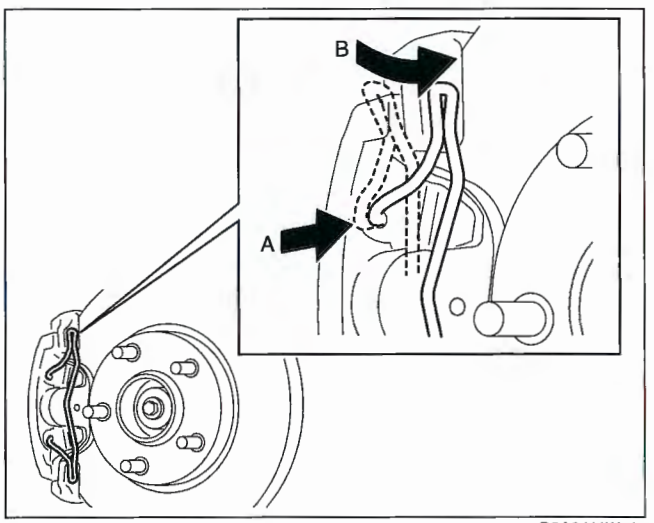

B3A0411W016

DISC PAD (FRONT) REPLACEMENT [L3, AJ]

E6U041133630W01

1. Remove in the order indicated in the table.
2. Install in the reverse order of removal.

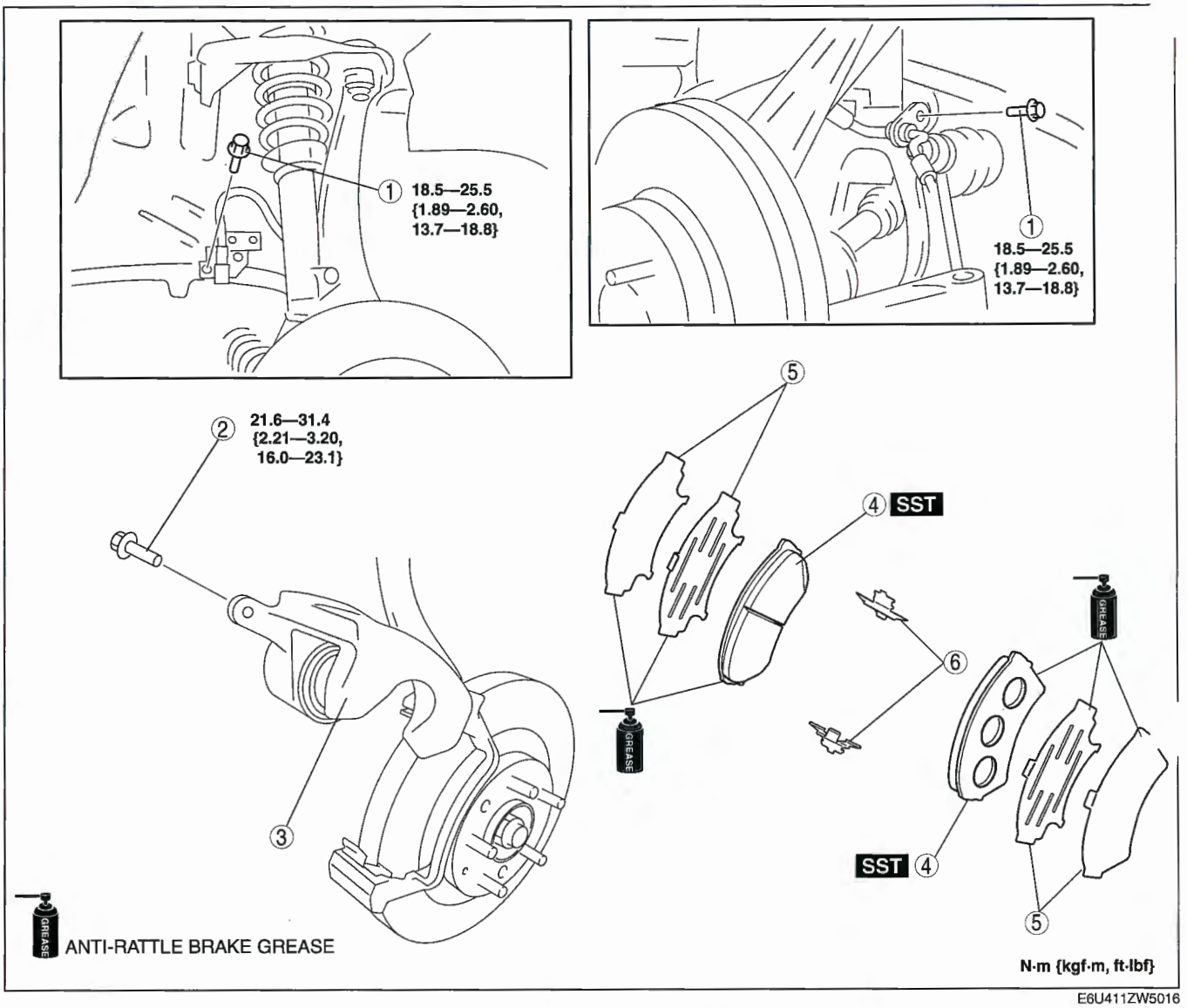

E6U411ZW5016

1	Bolt
2	Bolt
3	Caliper

4	Disc pad (See 04–11–20 Disc Pad Installation Note)
5	Shim
6	Guide plate

DISC PAD (FRONT) REPLACEMENT [L3 WITH TC]

E6U041133630W02

1. Remove in the order indicated in the table.
2. Install in the reverse order of removal.

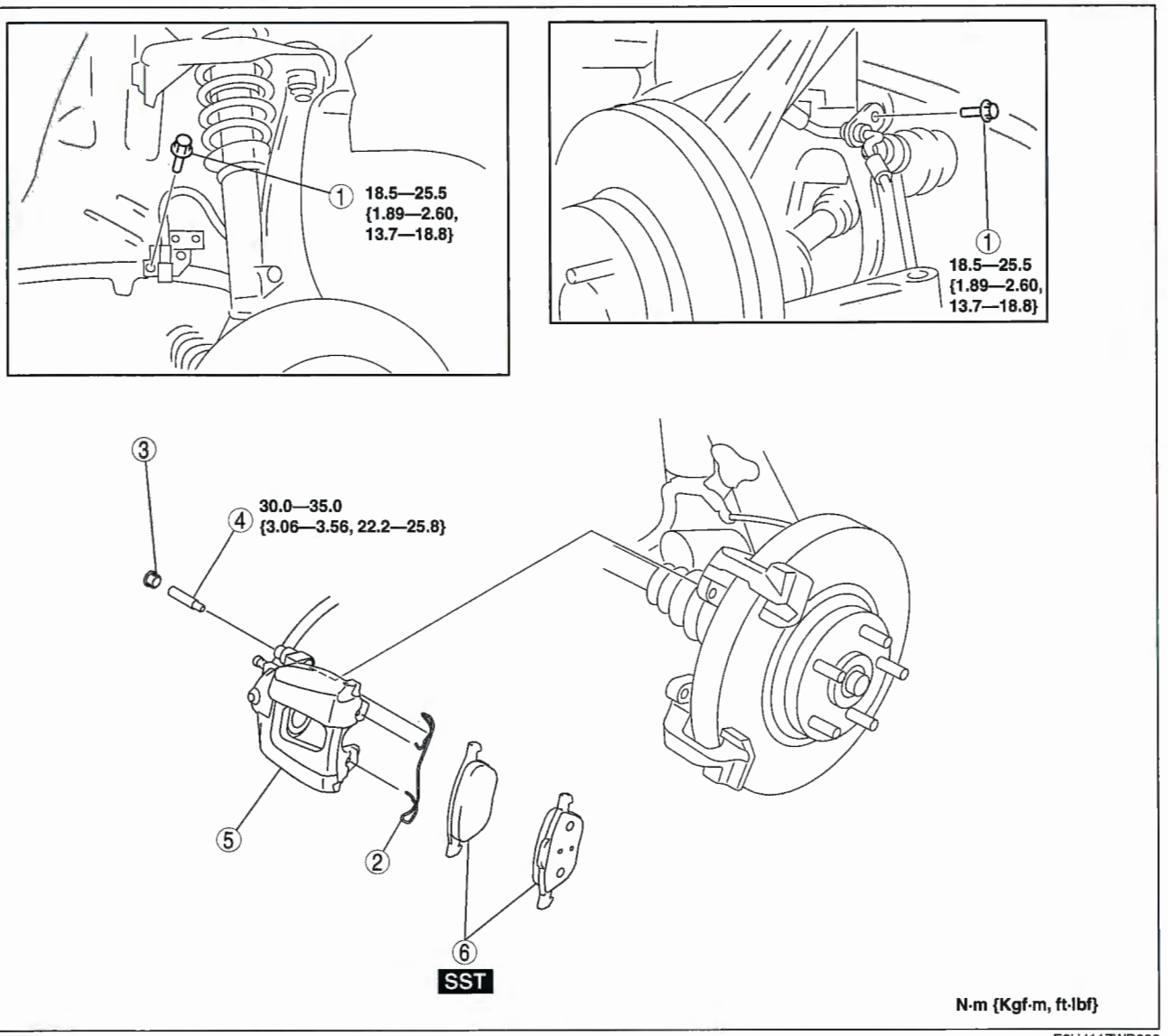

E6U411ZWB006

1	Bolt
2	Retaining clip (See 04–11–21 Retaining Clip Installation Note.)
3	Cap

4	Bolt
5	Caliper
6	Disc pad (See 04–11–21 Disc Pad Installation Note)

CALIPER (FRONT) DISASSEMBLY/ASSEMBLY [L3, AJ]

1. Disassemble in the order indicated in the table.

1	Dust seal
2	Piston (See 04–11–24 Piston Disassembly Note)
3	Piston seal (See 04–11–24 Piston Seal Disassembly Note)
4	Bleeder cap
5	Bleeder screw
6	Caliper body

2. Assemble in the reverse order of removal.

E6U041133990W01

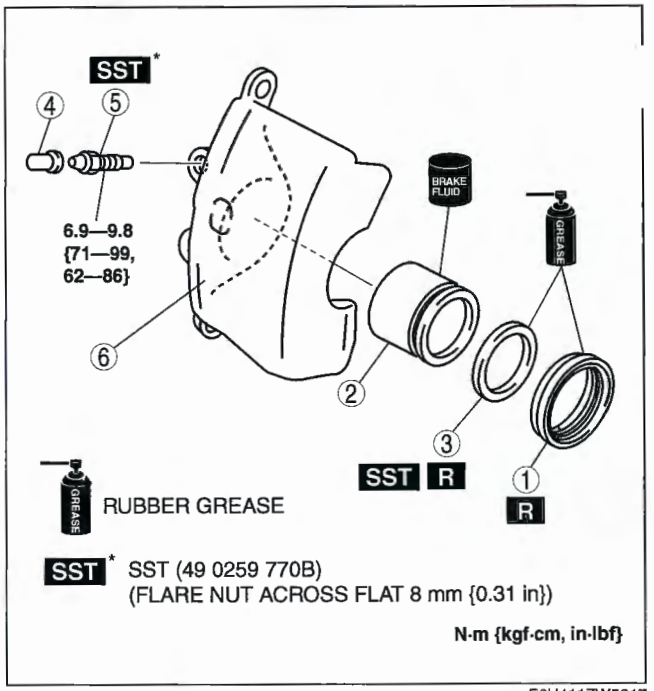

E6U411ZW5017

Piston Disassembly Note

Caution

- **Blow the compressed air slowly to prevent the piston from suddenly popping out.**

1. Place a piece of wood in the caliper, then blow compressed air through the hole to force the piston out of the caliper.

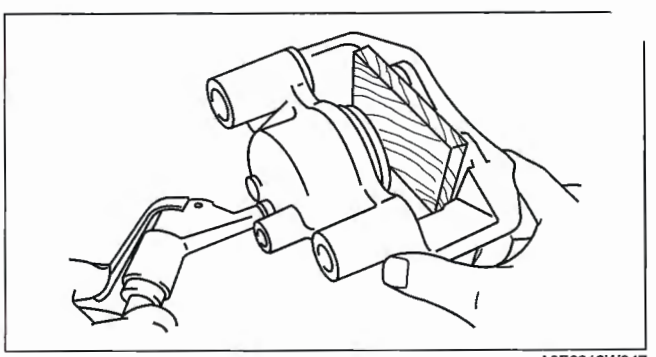

A6E6912W047

Piston Seal Disassembly Note

1. Remove the piston seal from the brake caliper using the **SST**.

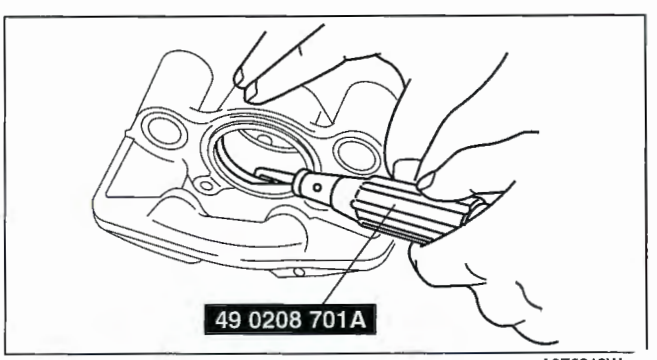

A6E6912W

CALIPER (FRONT) DISASSEMBLY/ASSEMBLY [L3 WITH TC]

1. Disassemble in the order indicated in the table.

1	Bleeder cap
2	Bleeder screw
3	Piston (See 04–11–25 Piston Disassembly Note.)
4	Dust seal
5	Piston seal (See 04–11–25 Piston Seal Disassembly Note.)
6	Caliper body

2. Assemble in the reverse order of disassembly.

E6U041133990W02

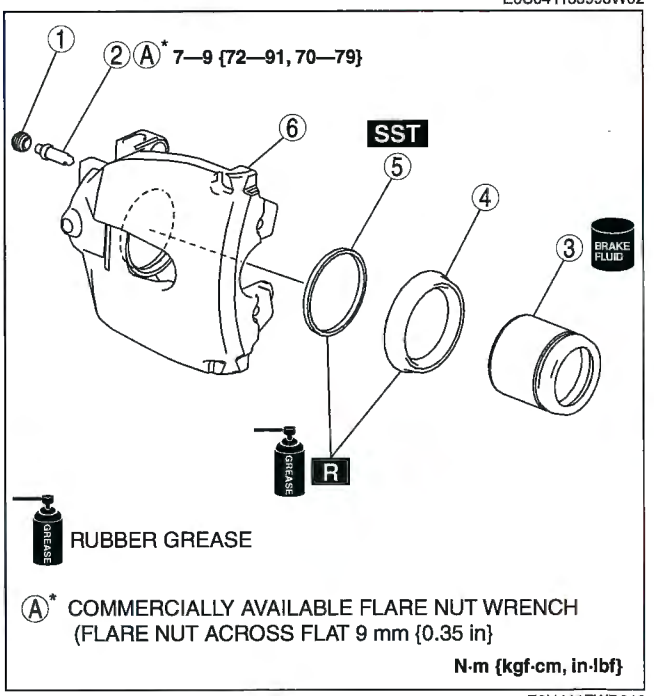

E6U411ZWB010

04–11

Piston Disassembly Note

Caution
- **Blow the compressed air slowly to prevent the piston from suddenly popping out.**

Place a piece of wood in the caliper, then blow compressed air through the hole to force the piston out of the caliper.

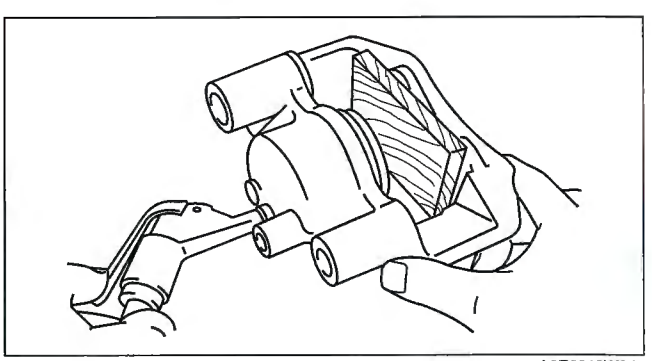

A6E6912W047

Piston Seal Disassembly Note

1. Remove the piston seal from the brake caliper using the **SST**.

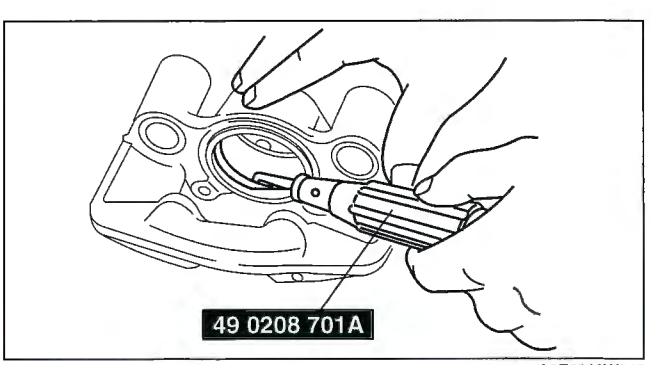

A6E6912W048

REAR BRAKE (DISC) INSPECTION

E6U041126980W01

Brake Judder Repair Hints

Description

1. Brake judder concern has the following 3 characteristics:

Steering wheel vibration

1. Steering wheel vibrates in the rotation direction. This characteristic is most noticeable when applying brakes at a vehicle speed of **100—140 km/h {62.1—86.8 mph}**.

Floor vibration

1. When applying the brakes, the vehicle body shakes back and forth. The seriousness of the shaking is not influenced by vehicle speed.

Brake pedal vibration

1. When applying brakes, a pulsating force tries to push the brake pad back. The pulsation is transmitted to the brake pedal.
2. The following are the main possible causes of brake judder:

Due to an excessive runout (side-to-side wobble) of the disc plate, the thickness of the disc plate is uneven.

1. If the runout is **more than 0.05 mm {0.002 in}** at the position **10 mm {0.39 in}** from the disc plate edge, uneven wear occurs on the disc plate because the pad contacts the plate unevenly.
2. If the runout is **less than 0.05 mm {0.002 in}**, uneven wear does not occur.

The disc plate is deformed by heat.

1. Repeated panic braking may raise the temperature in some portions of disc plate by **approx. 1,000 °C {1,832 °F}**. This results in a deformed disc plate.

Due to corrosion, the thickness and friction coefficient of disc plate change.

1. If a vehicle is parked in damp conditions for a long time, corrosion occurs on the friction surface of disc plate.
2. The thickness of corrosion is uneven and sometimes appears like a wave pattern, which changes the friction coefficient and causes a reaction force.

Inspection and repair procedure

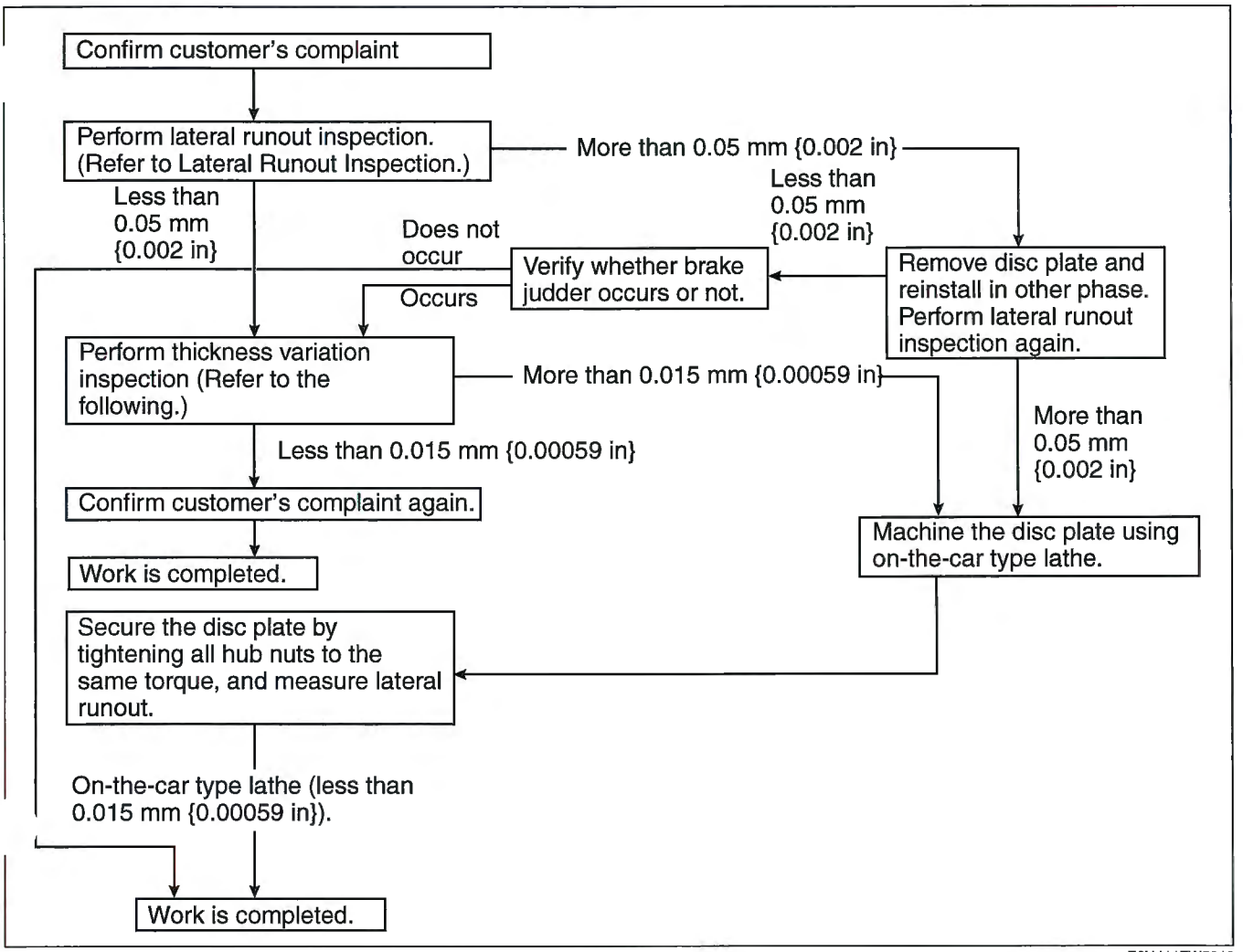

E6U411ZW5010

Lateral runout inspection

1. To secure the disc plate and the hub, tighten the hub nuts upside down or insert a washer (thickness **10 mm {0.39 in}**, inner diameter **more than 12 mm {0.47 in}**) between the hub bolt and the hub nut.

   Note
   - The component parts of the **SST** (49 B017 001 or 49 G019 003) can be used as a suitable washer.

2. After tightening all the hub nuts to the same torque, put the dial gauge on the friction surface of disc plate **10 mm {0.39 in}** from the disc plate edge.
3. Rotate the disc plate one time and measure the runout.

   Rear disc plate runout limit
   0.05 mm {0.002 in}

Thickness variation inspection

1. Clean the disc plate-to-pad friction surface using a brake cleaner.
2. Measure the points indicated in the illustration using a caliper (micrometer).
3. Subtract the minimum value from the maximum, and if the result is not within specification, machine the disc plate using a lathe.

Thickness variation limit
0.015 mm {0.0005 in}

Warning
- **Do not exceed minimum disc plate thickness.**

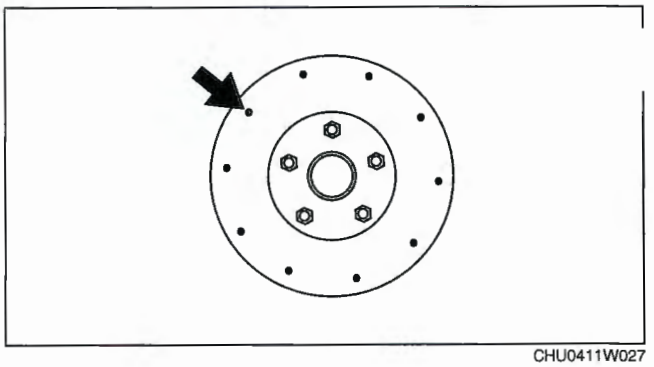
CHU0411W027

Disc Plate Thickness Inspection

Caution
- **Excessive runout may result if the disc plate is removed from the vehicle and then machined. Machine the disc plate while installed on the vehicle.**

1. Measure the thickness of the disc plate.
   - If the thickness is not within the specification, replace the disc plate.

Minimum rear disc plate thickness
L3, AJ: 8 mm {0.31 in}
L3 WITH TC: 9 mm {0.35 in}

Minimum rear disc plate thickness after machining using a brake lathe on-vehicle
L3, AJ: 8.8 mm {0.35 in}
L3 WITH TC: 9.8 mm {0.39 in}

Disc Pad Thickness Inspection

1. Jack up the rear of the vehicle and support it with safety stands.
2. Remove the wheel and tires.
3. Verify the remaining thickness of the pads.

Minimum rear disc pad thickness
2.0 mm {0.079 in} min.

4. Replace the pads as a set: right and left wheels, if either one is at or less than the minimum thickness.

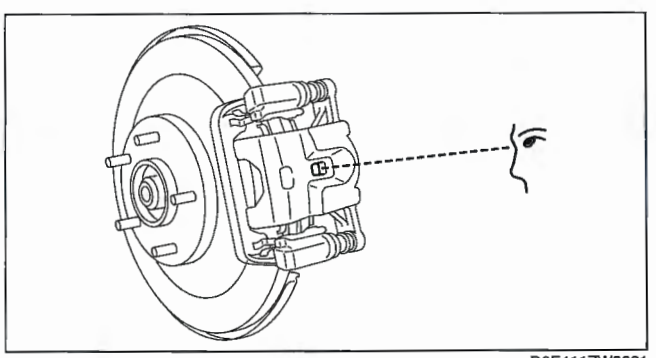
D6E411ZW3021

REAR BRAKE (DISC) REMOVAL/INSTALLATION

E6U041126980W02

1. Remove in the order indicated in the table.
2. Install in the reverse order of removal.
   After installation, depress the pedal several times, rotate the wheel by hand, and verify that the brake does not drag.

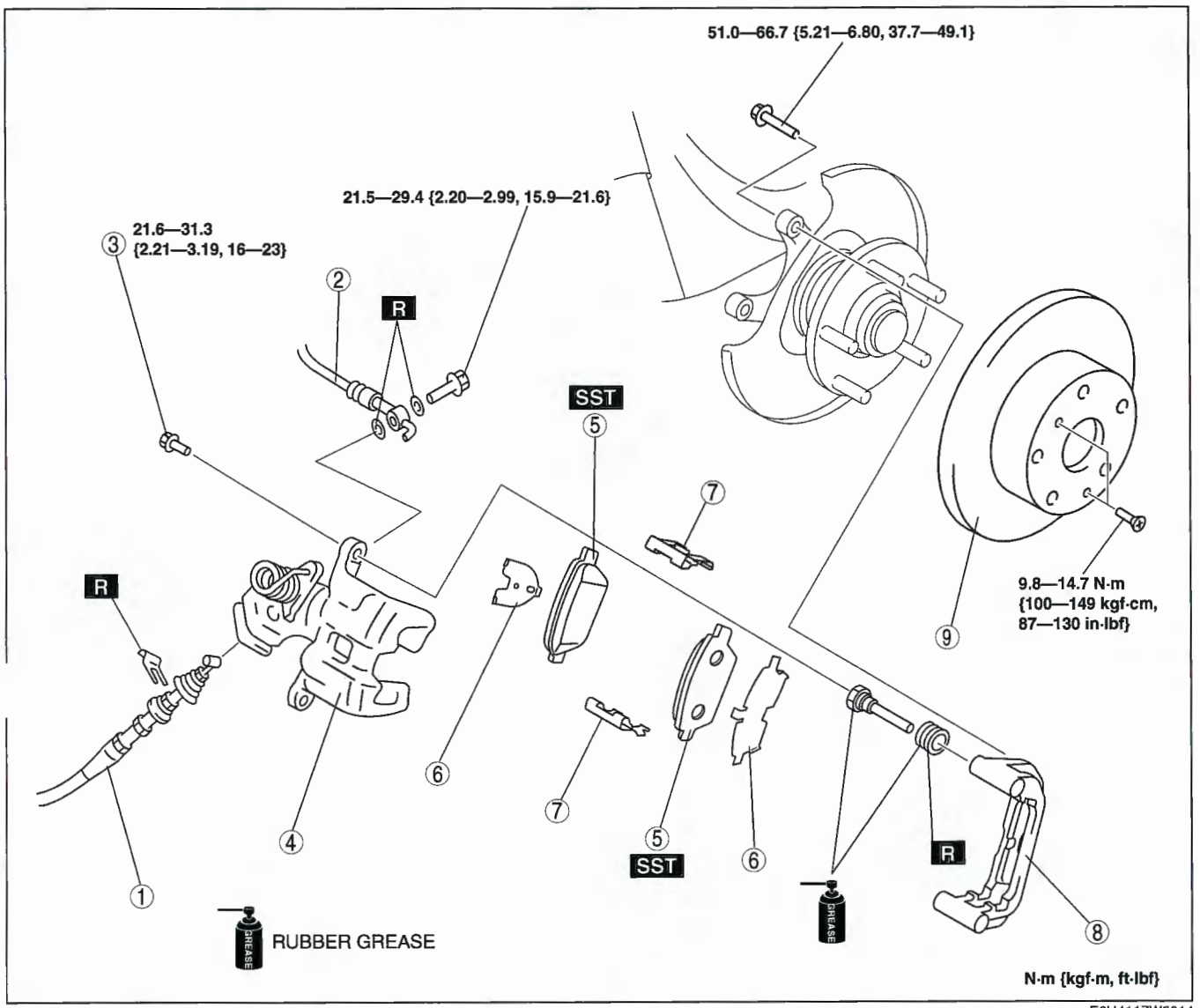

E6U411ZW5014

1	Parking brake cable, clip
2	Flexible hose
3	Bolt
4	Caliper
5	Disc pad (See 04–11–30 Disc Pad Installation Note)

6	Shim
7	Guide plate
8	Mounting support
9	Disc plate

Disc Pad Installation Note

1. Push the piston fully inward using the **SST**.
2. Install the disc pads.

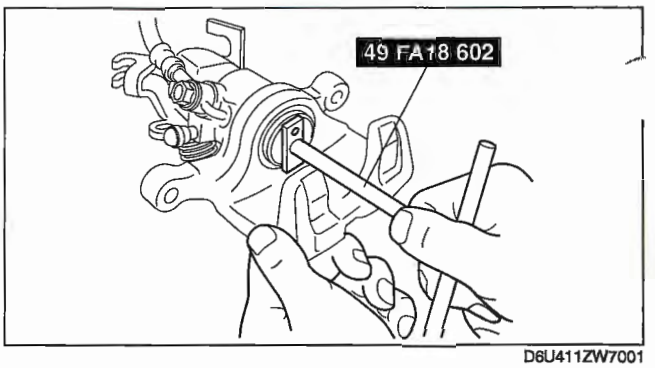

D6U411ZW7001

DISC PAD (REAR) REPLACEMENT

E6U041126630W01

1. Remove in the order indicated in the table.
2. Install in the reverse order of removal.

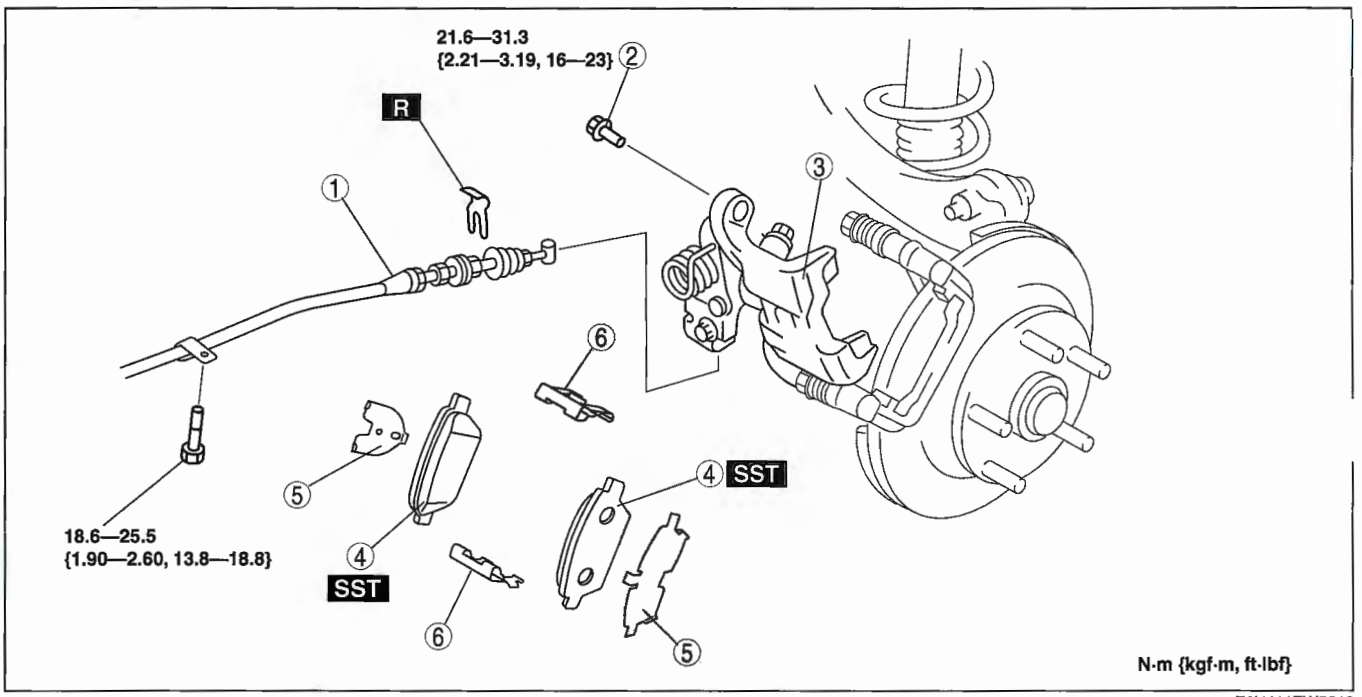

E6U411ZW5013

1	Parking brake cable, clip
2	Bolt
3	Caliper

4	Disc pad (See 04–11–30 Disc Pad Installation Note)
5	Shim
6	Guide plate

CALIPER (REAR) DISASSEMBLY/ASSEMBLY

E6U041126990W01

1. Disassemble in the order indicated in the table.
2. Assemble in the reverse order of disassembly.

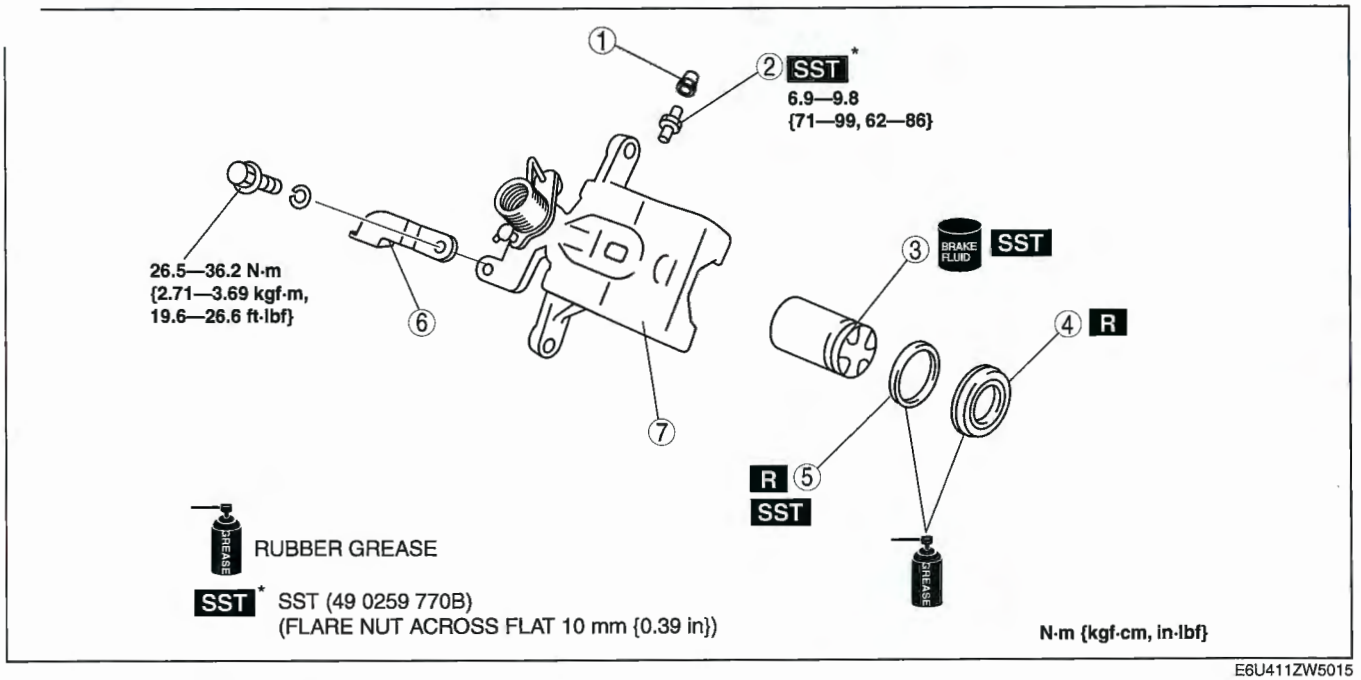

E6U411ZW5015

1	Bleeder cap
2	Bleeder screw
3	Piston (See 04–11–31 Piston Disassembly/Assembly Note)
4	Piston boot
5	Piston seal (See 04–11–24 Piston Seal Disassembly Note.) (See 04–11–25 Piston Seal Disassembly Note.)
6	Bracket
7	Caliper body

Piston Disassembly/Assembly Note

- Remove/install the piston using the **SST**.

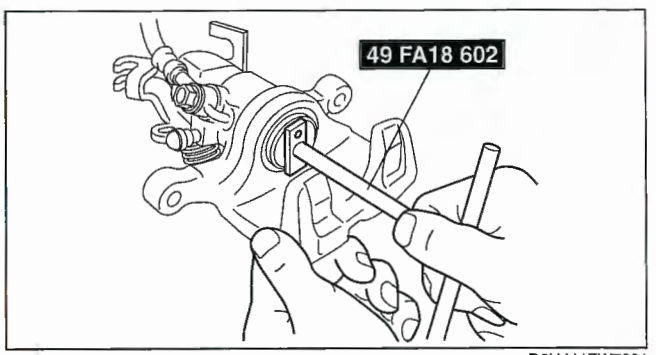

D6U411ZW7001

04–12 PARKING BRAKE SYSTEM

PARKING BRAKE
LOCATION INDEX..... 04–12–1
PARKING BRAKE (LEVER TYPE)
INSPECTION..... 04–12–1
PARKING BRAKE (LEVER TYPE)
ADJUSTMENT 04–12–2
PARKING BRAKE (LEVER TYPE)
REMOVAL/INSTALLATION 04–12–2

PARKING BRAKE LOCATION INDEX

E6U041244300W01

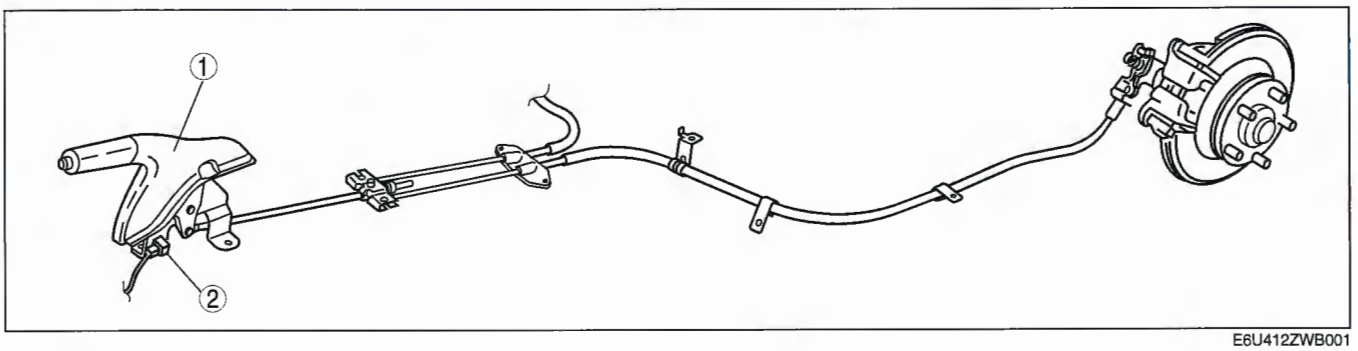

E6U412ZWB001

1	Parking brake lever (See04–12–1 PARKING BRAKE (LEVER TYPE) INSPECTION) (See04–12–2 PARKING BRAKE (LEVER TYPE) ADJUSTMENT) (See04–12–2 PARKING BRAKE (LEVER TYPE) REMOVAL/INSTALLATION)

RKING BRAKE (LEVER TYPE) INSPECTION

E6U041244300W02

1. Pull the parking brake lever a few times.
2. Depress the brake pedal a few times.
3. Inspect the parking brake stroke by pulling the parking brake lever with a force of **98 N {10 kgf, 22 lbf}**.

Parking brake lever stroke when pulled at 98 N {10 kgf, 22 lbf}
2—5 notches

PARKING BRAKE (LEVER TYPE) ADJUSTMENT

E6U041244300W03

1. Start the engine and depress the brake pedal several times.
2. Stop the engine.
3. Pull the underside of the cover in the direction shown by the arrow and remove clips A from the console.
4. Disengage the hooks from the console and remove the cover.

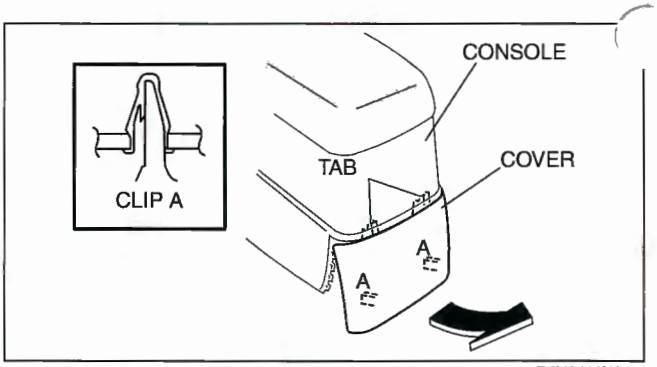

B6U0412W011

5. Verify the position of the adjusting nut while looking in from above the console (A) as shown, and set the socket on the nut.
6. Turn the adjusting nut to adjust the parking brake lever.
7. After adjustment, inspect the following points:
   (1) Turn the ignition switch to ON, pull the parking brake lever one notch, and verify that the parking brake warning light illuminates.
   (2) Verify that the rear brakes do not drag.

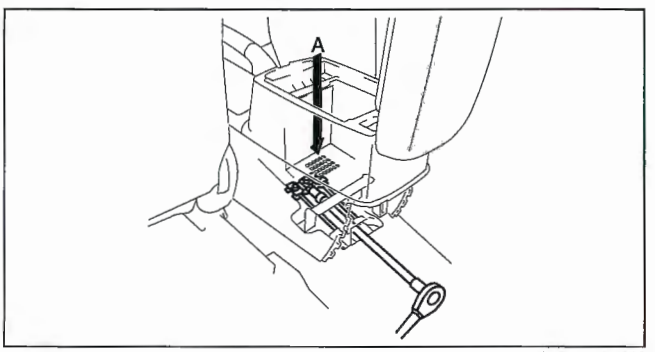

A6E6914W012

PARKING BRAKE (LEVER TYPE) REMOVAL/INSTALLATION

E6U041244300W04

1. Remove the console. (See 09–17–8 CONSOLE REMOVAL/INSTALLATION.)
2. Remove the rear seat cushion (Sedan) or rear seat (5-Door, Sport Wagon). (See 09–13–16 REAR SEAT REMOVAL/INSTALLATION [SPORT SEDAN].) (See 09–13–17 REAR SEAT REMOVAL/INSTALLATION [5-DOOR, SPORT WAGON].) (See 09–13–14 REAR SEAT REMOVAL/INSTALLATION [MAZDASPEED6].)
3. Remove the propeller shaft (L3 WITH TC). (See 03–15–4 PROPELLER SHAFT REMOVAL/INSTALLATION.)
4. Remove the exhaust pipe insulator.
5. Remove in the order indicated in the table.
6. Install in the reverse order of removal.
7. Adjust the parking brake stroke. (See 04–12–2 PARKING BRAKE (LEVER TYPE) ADJUSTMENT.)

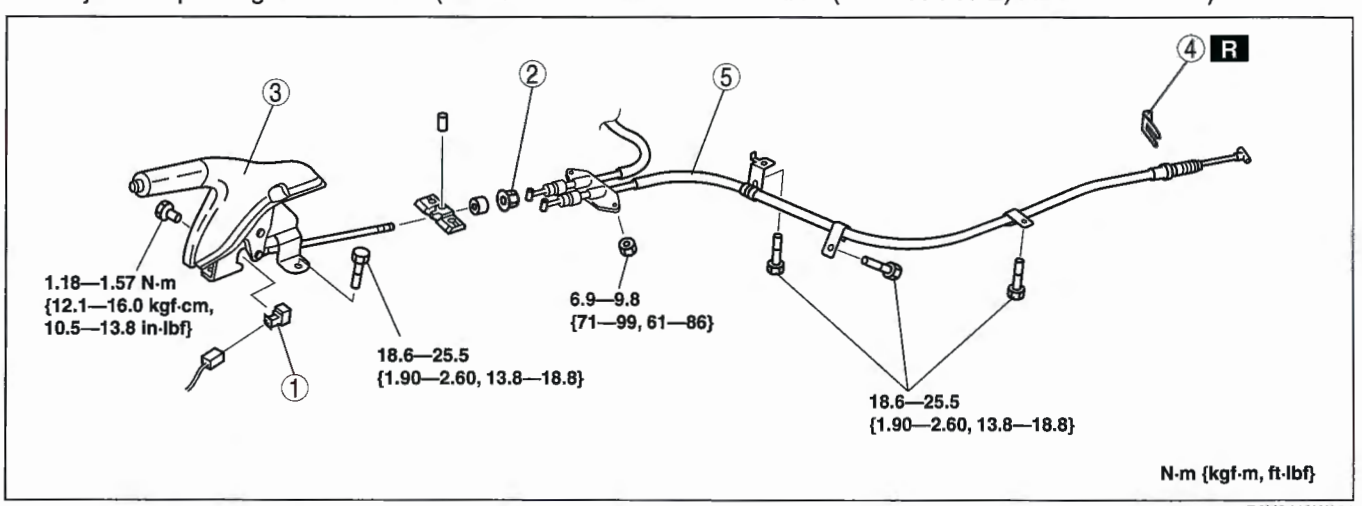

B6U0412W001

1	Parking brake switch
2	Adjusting nut
3	Parking brake lever

4	Clip
5	Parking brake cable

04–13 ANTILOCK BRAKE SYSTEM

ABS/TCS LOCATION INDEX 04–13–1
S/TCS SYSTEM WIRING DIAGRAM 04–13–2
ABS/TCS HU/CM SYSTEM INSPECTION 04–13–3
System Inspection 04–13–3
ABS/TCS HU/CM REMOVAL/INSTALLATION 04–13–4
Connector Removal Note 04–13–5
Brake Pipe Removal Note 04–13–5
ABS/TCS HU/CM Removal/Installation Note 04–13–5
Brake Pipe Installation Note 04–13–5
Connector Installation Note 04–13–5
ABS/TCS HU/CM CONFIGURATION 04–13–6
ABS/TCS HU/CM INSPECTION 04–13–6
Terminal Voltage Table (Reference) 04–13–6
FRONT ABS WHEEL-SPEED SENSOR REMOVAL/INSTALLATION 04–13–8
FRONT/REAR ABS WHEEL-SPEED SENSOR INSPECTION 04–13–9
Visual Inspection 04–13–9
Clearance Inspection 04–13–9
Resistance Inspection 04–13–9
Voltage Inspection 04–13–9
Voltage Pattern Inspection 04–13–9
REAR ABS WHEEL-SPEED SENSOR REMOVAL/INSTALLATION 04–13–10

ABS/TCS LOCATION INDEX

E6U041300000W01

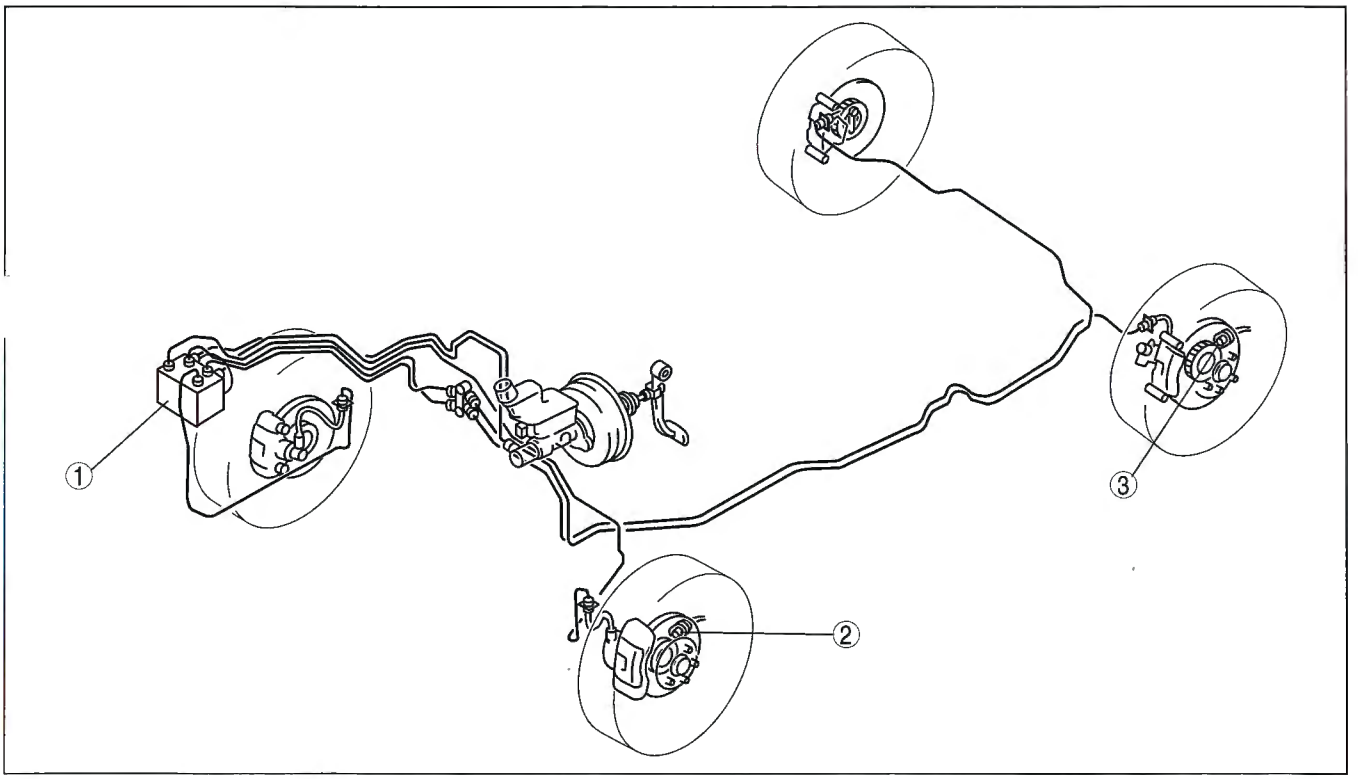

B6U0413W001

1	ABS/TCS HU/CM (See 04–13–3 ABS/TCS HU/CM SYSTEM INSPECTION) (See 04–13–2 ABS/TCS SYSTEM WIRING DIAGRAM.) (See 04–13–4 ABS/TCS HU/CM REMOVAL/INSTALLATION) (See 04–13–6 ABS/TCS HU/CM INSPECTION) (See04–13–6 ABS/TCS HU/CM CONFIGURATION)

2	Front ABS wheel-speed sensor (See 04–13–8 FRONT ABS WHEEL-SPEED SENSOR REMOVAL/INSTALLATION) (See 04–13–9 FRONT/REAR ABS WHEEL-SPEED SENSOR INSPECTION)
3	Rear ABS wheel-speed sensor (See 04–13–9 FRONT/REAR ABS WHEEL-SPEED SENSOR INSPECTION) (See 04–13–10 REAR ABS WHEEL-SPEED SENSOR REMOVAL/INSTALLATION)

ABS/TCS SYSTEM WIRING DIAGRAM

E6U041300000W02

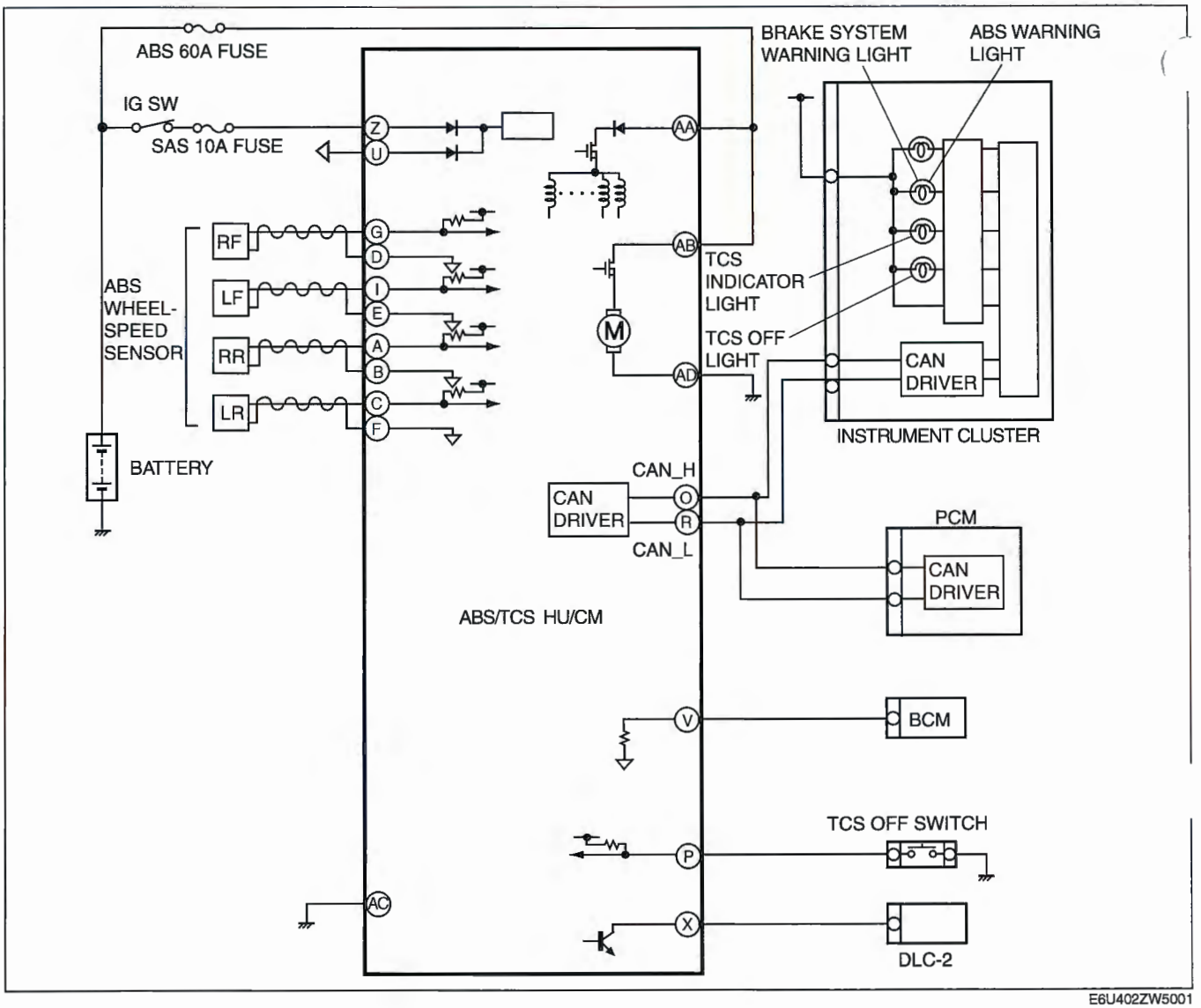

E6U402ZW5001

ABS/TCS HU/CM SYSTEM INSPECTION

E6U041343780W01

System Inspection

Preparation

1. Verify that the battery is fully charged. With the ignition switch at ON, verify that the ABS and BRAKE system warning lights go out after **3 s**.
2. If the lights stay on after **3 s**, the ABS/TCS HU/CM detects a failure. Follow the troubleshooting procedures.
3. Turn the ignition switch off.
4. On level ground, jack up the vehicle and support it evenly on safety stands. Shift the transaxle to N position.
5. Release the parking brake.
6. Rotate the wheels by hand, and inspect for brake drag.

Operation of ABS inspection

1. Perform the "Preparation."
2. Connect WDS or equivalent to the DLC-2.
3. Set up an active command mode inspection according to the combination of commands below.

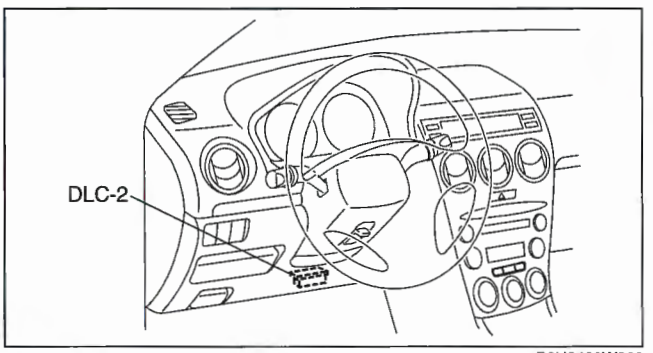

B6U0402W002

OPERATION	COMMAND NAME				COMMAND TYPE
	PMP_MOTOR	RF_OUTLET	RF_INLET	ABS_POWER	
Pressure retention	Off	Off	On	On	Manual
Pressure reduction	On	On	On	On	

The chart above shows an example of a right wheel inspection.

Note

- When working with two people, one should press on the brake pedal, the other should attempt to rotate the wheel being inspected.

4. Send the command while pressing on the brake pedal and attempting to rotate the wheel being inspected.
5. When pressure is being maintained, and a click sound indicating the solenoid is operating comes from the ABS/TCS HU/CM, confirm that the wheel does not rotate. When pressure is being reduced, and a click sound indicating the solenoid is operating comes from the ABS/TCS HU/CM, confirm that the wheel rotates, even though the brake pedal is being depressed.

Note

- To protect the ABS/TCS HU/CM, the solenoid valve used for simulations and the ABS motor stay on for **10 s** each time they are switched on.
- Performing the inspections above determines the following.
  - — The ABS/TCS HU/CM brake lines are normal.
  - — The ABS/TCS HU/CM hydraulic system is not significantly abnormal.
  - — The ABS/TCS HU/CM wiring is normal.
- However, the following items cannot be checked.
  - — ABS/TCS HU/CM input system harness and parts.
  - — Extremely small leaks in the ABS/TCS HU/CM internal hydraulic system
  - — Unusual intermittent occurrences in the above items.

ABS/TCS HU/CM REMOVAL/INSTALLATION

E6U041343780W02

Caution

- **When replacing the ABS/TCS HU/CM, the configuration procedure must be done before removin the ABS/TCS HU/CM. If the configuration is not completed before removing the ABS/TCS HU/CM, TCS will not work properly after installation of the ABS/TCS HU/CM.**
- **Do not drop the ABS/TCS HU/CM. Replace it if it is subjected to an impact.**

1. Configurate the ABS/TCS HU/CM (only when replacing it). (See 04–13–6 ABS/TCS HU/CM CONFIGURATION.)
2. Remove in the order indicated in the table.
3. Install in the reverse order of removal.

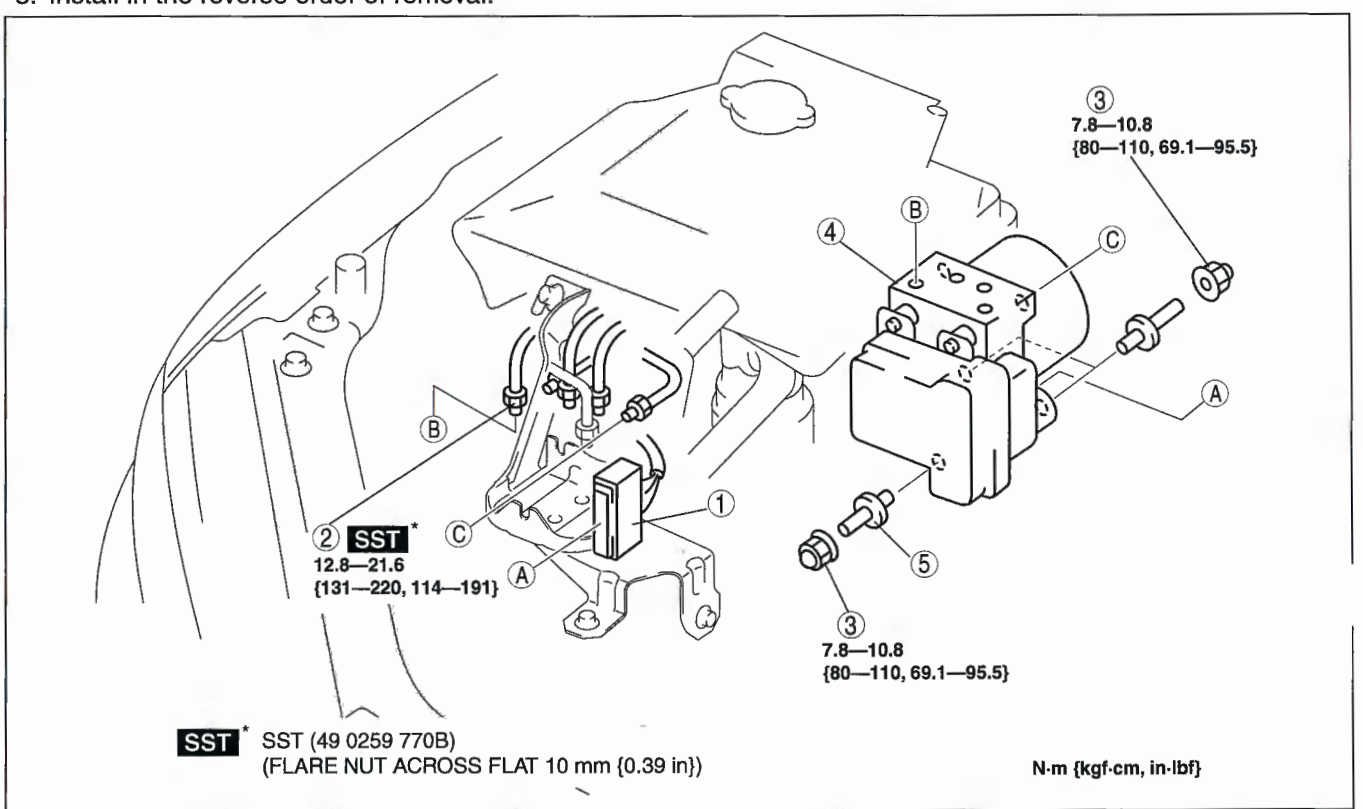

E6U413ZW5004

1	Connector (See 04–13–5 Connector Removal Note) (See 04–13–5 Connector Installation Note
2	Brake pipe (See 04–13–5 Brake Pipe Removal Note) (See 04–13–5 Brake Pipe Installation Note)
3	Nut

4	ABS/TCS HU/CM (See 04–13–5 ABS/TCS HU/CM Removal/ Installation Note)
5	Stud

Connector Removal Note

1. Release the lock lever to unlock it.
2. Remove the connector.

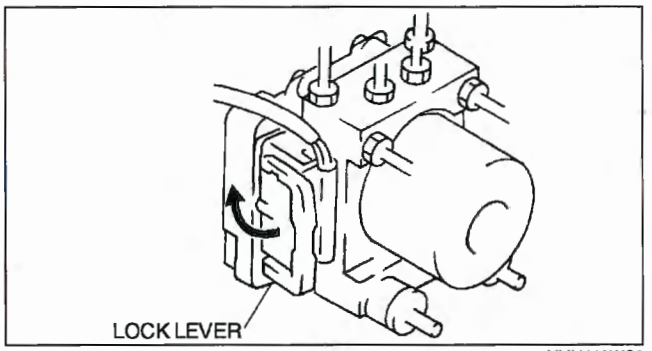

YMU413WC8

Brake Pipe Removal Note

1. Mark the brake pipe connecting positions before removal for reference during installation.

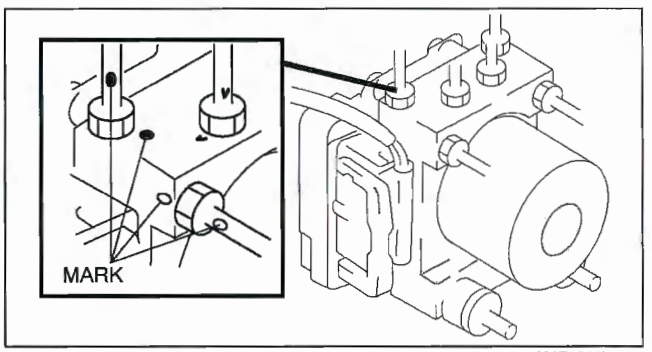

AME6918W006

ABS/TCS HU/CM Removal/Installation Note

1. When removing/installing the ABS/TCS HU/CM from/to the vehicle, attach a strip of protective tape on the ABS/TCS HU/CM connector to prevent brake fluid from entering.

Brake Pipe Installation Note

1. When installing the brake pipe, align the marks made before removal with the ABS/TCS HU/CM as shown in the figure.

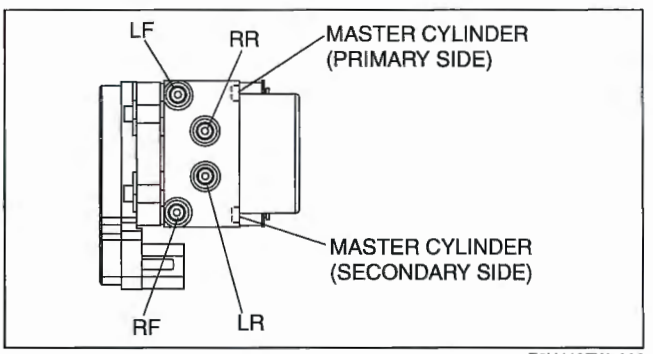

E6U413ZW5003

Connector Installation Note

1. Verify that the lock lever of the harness connector is securely locked.

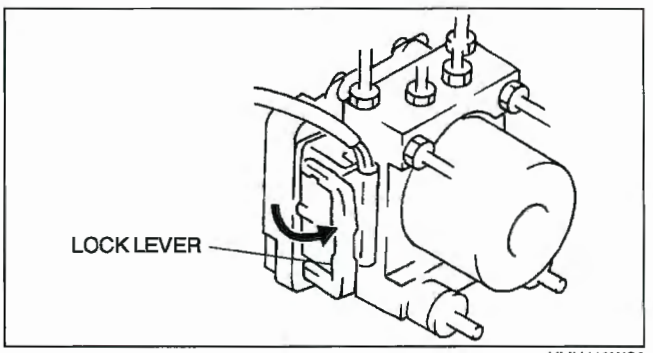

YMU413WC9

ABS/TCS HU/CM CONFIGURATION

1. Connect the WDS or equivalent to the DLC-2.
2. Input vehicle information following the directions on the WDS or equivalent screen.
3. Select "MODULE PROGRAMMING".
4. Select "PROGRAMMABLE MODULE INSTALLATION".
5. Select "ABS/TCS".
6. Retrieve DTCs using the WDS or equivalent, then verify that there is no DTC present.
   - If any DTC is present, perform applicable DTC inspection.

E6U041343780W03

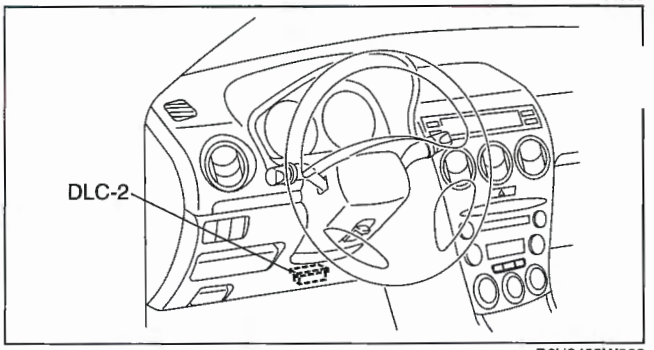

B6U0402W002

ABS/TCS HU/CM INSPECTION

E6U041367650W01

1. Disconnect the ABS/TCS HU/CM connector.
2. Connect the negative battery cable.
3. Attach the tester lead to the ABS/TCS HU/CM wiring harness-side connector, then inspect the voltage, continuity, or resistance according to the standard (reference) on the table.

Terminal Voltage Table (Reference)

ABS/TCS HU/CM HARNESS-SIDE CONNECTOR

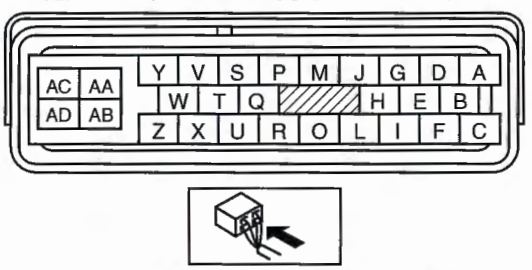

E6U413ZW5001

Terminal	Signal name	Connected to	Measured item	Measured terminal (measured condition)	Standard	Inspection item (s)
A	RR wheel-speed sensor (signal)	RR ABS wheel-speed sensor	Continuity	A—RR ABS wheel-speed sensor connector terminal A	Continuity detected	• Wiring harness (A—RR ABS wheel-speed sensor connector terminal A)
B	RR wheel-speed sensor (ground)	RR ABS wheel-speed sensor	Continuity	B—RR ABS wheel-speed sensor connector terminal B	Continuity detected	• Wiring harness (B—RR ABS wheel-speed sensor connector terminal B)
C	LR wheel-speed sensor (signal)	LR ABS wheel-speed sensor	Continuity	C—LR ABS wheel-speed sensor connector terminal A	Continuity detected	• Wiring harness (C—LR ABS wheel-speed sensor connector terminal A)
D	RF wheel-speed sensor (ground)	RF ABS wheel-speed sensor	Continuity	D—RF ABS wheel-speed sensor connector terminal B	Continuity detected	• Wiring harness (D—RF ABS wheel-speed sensor connector terminal B)
E	LF wheel-speed sensor (ground)	LF ABS wheel-speed sensor	Continuity	E—LF ABS wheel-speed sensor connector terminal B	Continuity detected	• Wiring harness (E—LF ABS wheel-speed sensor connector terminal B)
F	LR wheel-speed sensor (signal)	LR ABS wheel-speed sensor	Continuity	F—LR ABS wheel-speed sensor connector terminal A	Continuity detected	• Wiring harness (F—LR ABS wheel-speed sensor connector terminal A)
G	RF wheel-speed sensor (signal)	RF ABS wheel-speed sensor	Continuity	G—RF ABS wheel-speed sensor connector terminal A	Continuity detected	• Wiring harness (G—R ABS wheel-speed sensor connector terminal A)
H	—	—	—	—	—	—

Terminal	Signal name	Connected to	Measured item	Measured terminal (measured condition)	Standard	Inspection item (s)
I	LF wheel-speed sensor (single)	LF ABS wheel-speed sensor	Continuity	I—LF ABS wheel-speed sensor connector terminal A	Continuity detected	• Wiring harness (I—LF ABS wheel-speed sensor connector terminal A)
J	—	—	—	—	—	—
K	—	—	—	—	—	—
L	—	—	—	—	—	—
M	—	—	—	—	—	—
N	—	—	—	—	—	—
O	CAN_H	DLC-2 (CAN_H)	Continuity	O—DLC-2 terminal CAN_H	Continuity detected	• Wiring harness (O—DLC-2 terminal CAN_H)
P	TCS OFF switch	TCS OFF switch	Continuity	P—TCS OFF switch	Continuity detected	• Wiring harness (P—TCS OFF switch)
Q	—	—	—	—	—	—
R	CAN_L	DLC-2 (CAN_L)	Continuity	R—DLC-2 terminal CAN_L	Continuity detected	• Wiring harness (R—DLC-2 terminal CAN_L)
S	—	—	—	—	—	—
T	—	—	—	—	—	—
U	—	—	—	—	—	—
V	Vehicle speed output	BCM	Continuity	V—BCM terminal 9B	Continuity detected	• Wiring harness (V—BCM terminal 9B)
W	—	—	—	—	—	—
X	KLN	DLC-2 (KLN)	Continuity	X—DLC-2 terminal KLN	Continuity detected	• Wiring harness (X—DLC-2 terminal KLN)
Y	—	—	—	—	—	—
Z	Power supply (system)	Ignition switch	Voltage	Ignition switch at ON	B+	• Wiring harness (Z—ignition switch)
				Ignition switch is off.	1 V or less	—
AA	Power supply (solenoid)	Battery	Voltage	Under any condition	B+	• Wiring harness (AA—battery)
AB	Power supply (ABS motor operation)	Battery	Voltage	Under any condition	B+	• Wiring harness (AB—battery)
AC	Ground (ABS system)	Ground point	Continuity	AC—ground point	Continuity detected	• Wiring harness (AC—ground point)
AD	Ground (ABS motor)	Ground point	Continuity	AD—ground point	Continuity detected	• Wiring harness (AD—ground point)

FRONT ABS WHEEL-SPEED SENSOR REMOVAL/INSTALLATION

E6U041343720W01

1. Remove the mudguard.
2. Remove in the order indicated in the table.
3. Install in the reverse order of removal.

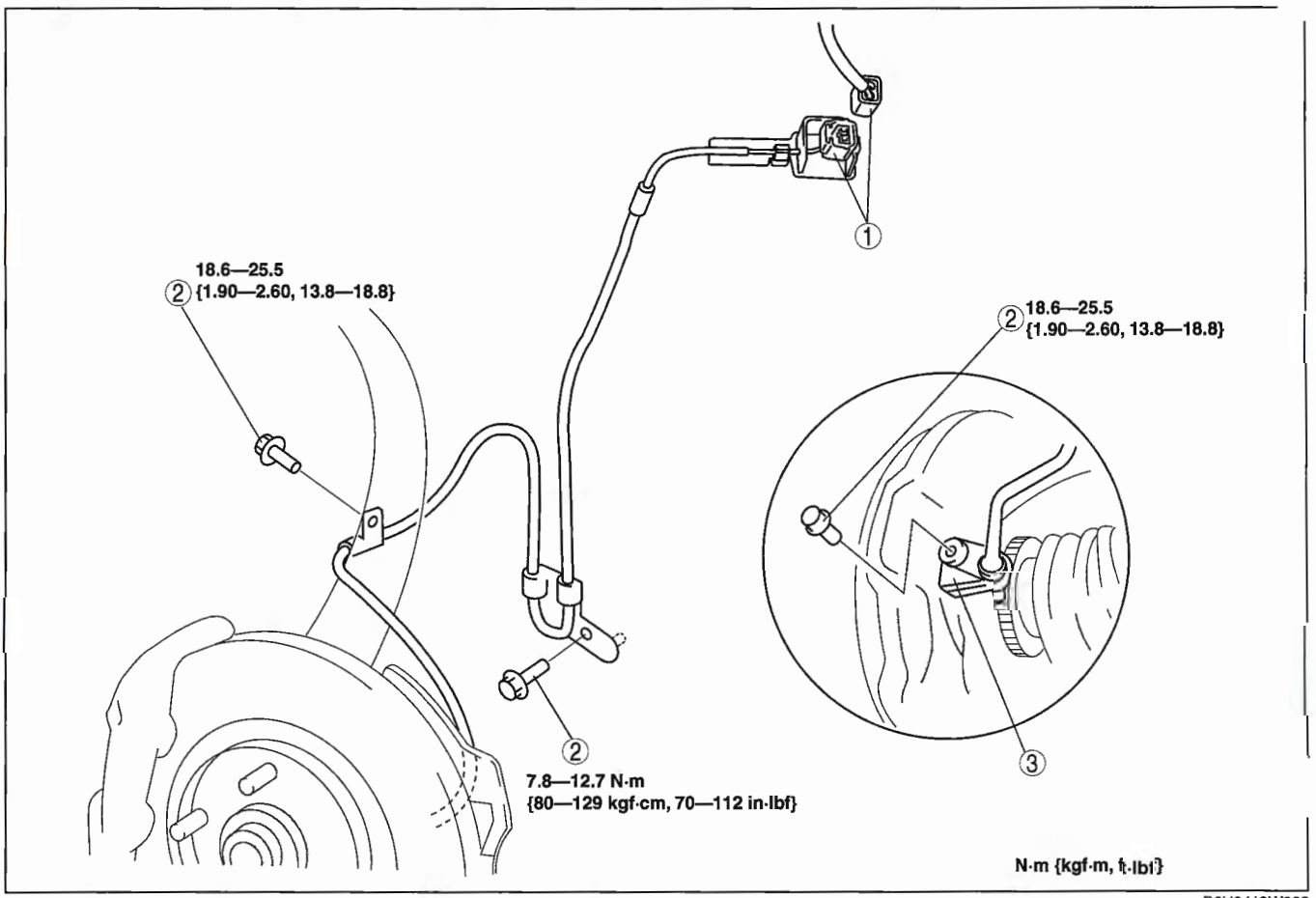

B6U0413W002

1	Connector
2	Bolts
3	Front ABS wheel-speed sensor

FRONT/REAR ABS WHEEL-SPEED SENSOR INSPECTION

E6U041343720W02

Visual Inspection

1. Remove the wheel and tire, and inspect the sensor for looseness and damage. Replace the sensor if necessary.

Clearance Inspection

1. Inspect the clearance between the wheel-speed sensor and the sensor rotor.

Clearance
0.3—1.1 mm {0.012—0.043 in}

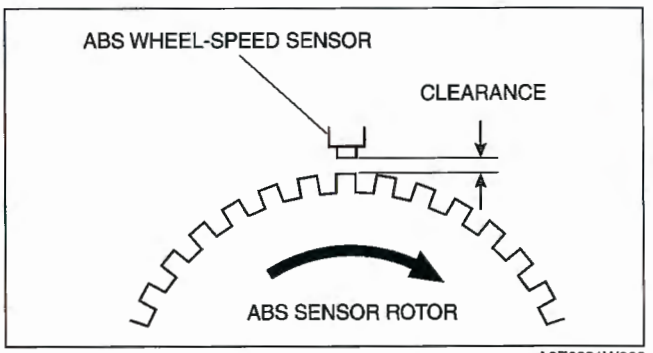

A6E6921W003

Resistance Inspection

1. Disconnect the ABS wheel-speed sensor connector.
2. Inspect the resistance at the ABS wheel-speed sensor.
   - If not as specified, replace the ABS wheel-speed sensor.

Resistance
1.3—1.7 kilohm

Voltage Inspection

1. On level ground, jack up the vehicle and support it evenly on safety stands.
2. Disconnect the ABS wheel-speed sensor connector.
3. Inspect each sensor by rotating each wheel one revolution per second.
   - If not as specified, replace the ABS wheel-speed sensor.

Voltage
0.25—1.2 V (AC)

Voltage Pattern Inspection

1. On level ground, jack up the vehicle and support it evenly on safety stands.
2. Disconnect the ABS wheel-speed sensor connector.
3. Using an oscilloscope, inspect the voltage pattern for distortion and noise by rotating each wheel.
   - If there is distortion or noise, inspect the ABS sensor rotor.

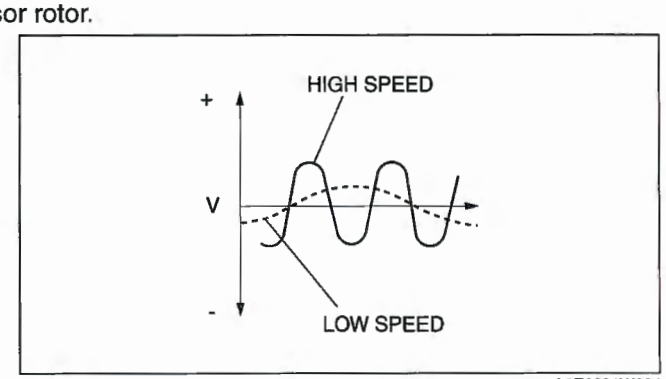

A6E6921W004

REAR ABS WHEEL-SPEED SENSOR REMOVAL/INSTALLATION

E6U041343710W01

1. Remove the tire house trim. (See 09–17–15 TIRE HOUSE TRIM REMOVAL/INSTALLATION.)
2. Remove in the order indicated in the table.
3. Install in the reverse order of removal.

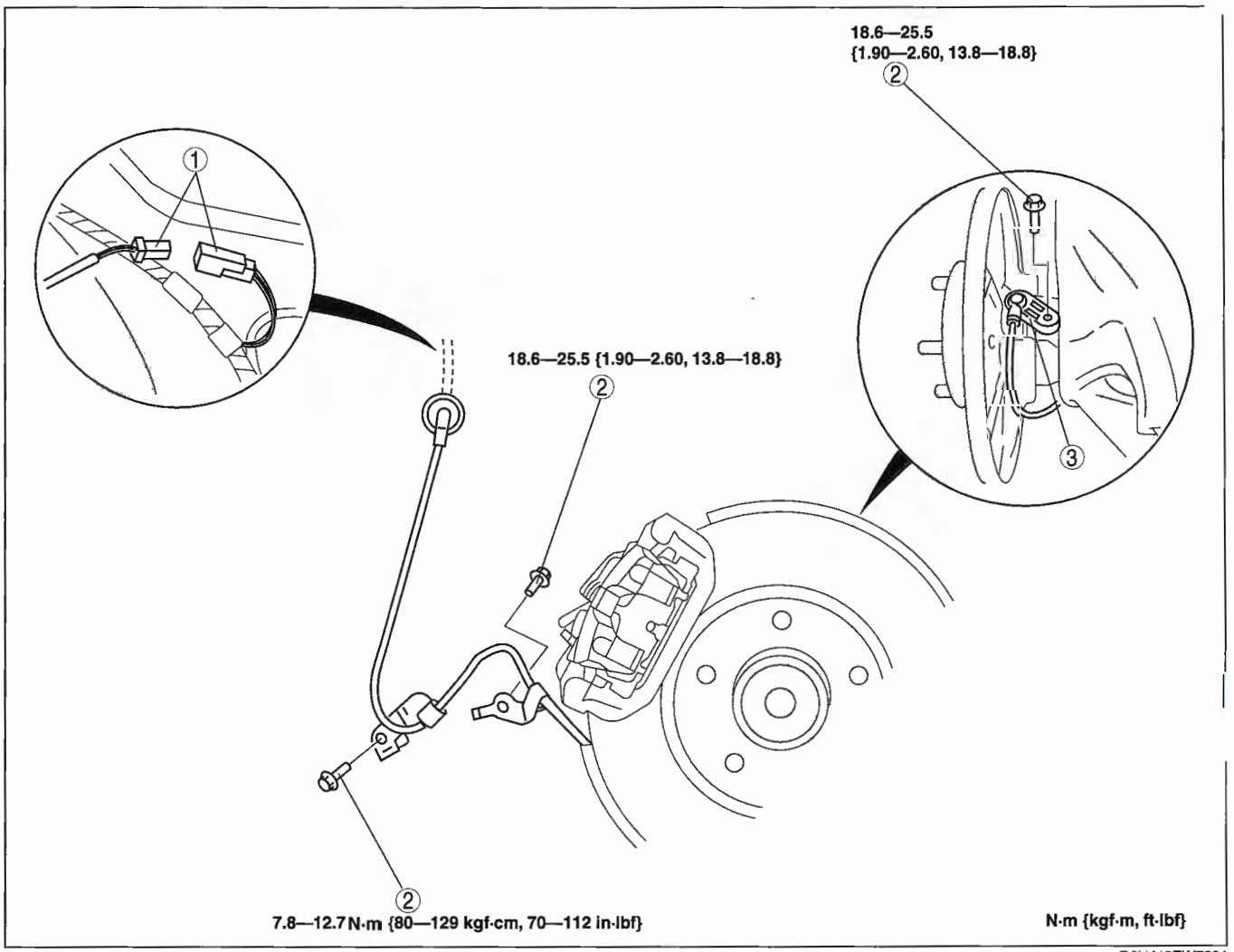

D6U413ZW7001

1	Connector
2	Bolt

3	Rear ABS wheel-speed sensor

04–14 TRACTION CONTROL SYSTEM

TRACTION CONTROL SYSTEM
LOCATION INDEX. 04–14–1

TCS OFF SWITCH
REMOVAL/INSTALLATION 04–14–2
TCS Off Switch Removal Note 04–14–2
TCS OFF SWITCH INSPECTION. 04–14–2

TRACTION CONTROL SYSTEM LOCATION INDEX

E6U041400000W01

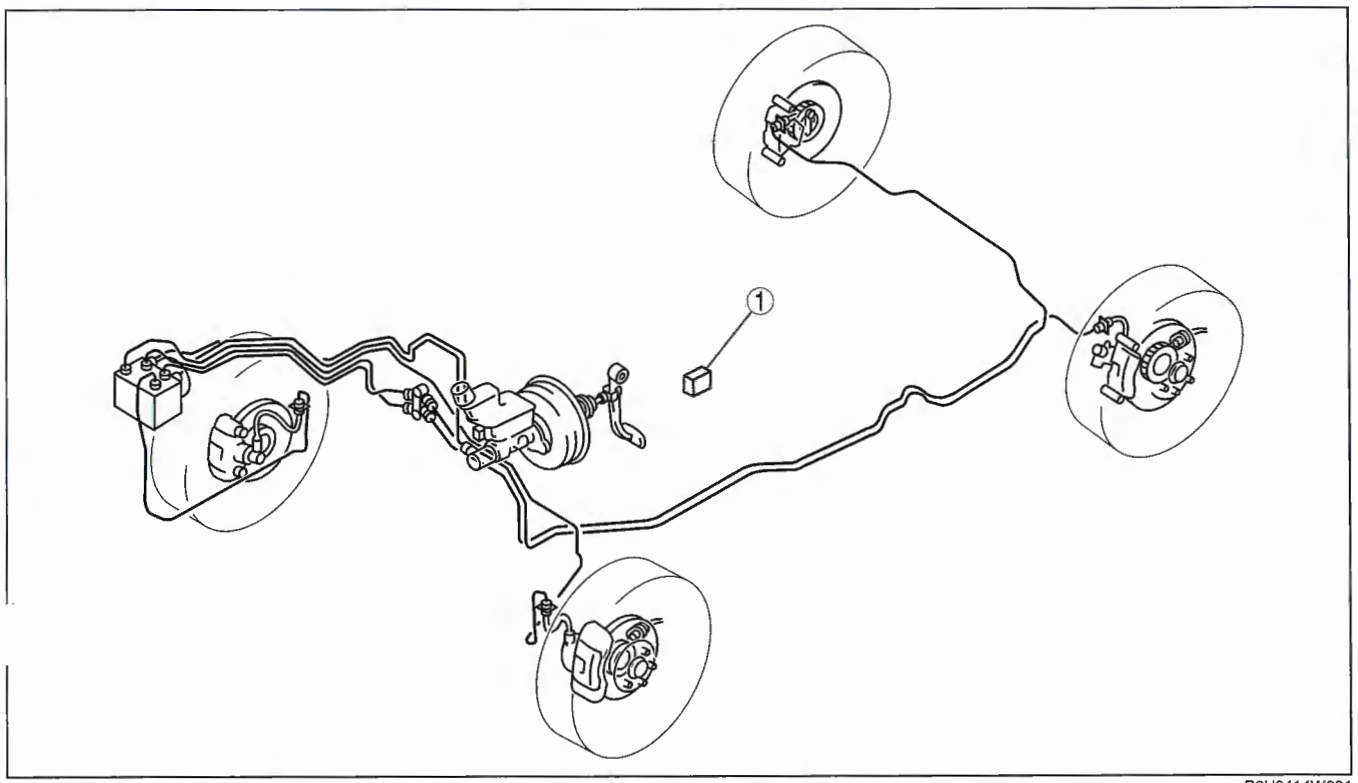

B6U0414W001

1	TCS off switch (See 04–14–2 TCS OFF SWITCH REMOVAL/INSTALLATION) (See 04–14–2 TCS OFF SWITCH INSPECTION)

TCS OFF SWITCH REMOVAL/INSTALLATION

E6U041466400W01

1. Disconnect the negative battery cable.
2. Remove in the order indicated in the table.

1	TCS off switch (See04–14–2 TCS Off Switch Removal Note)
2	Connector

3. Install in the reverse order of removal.

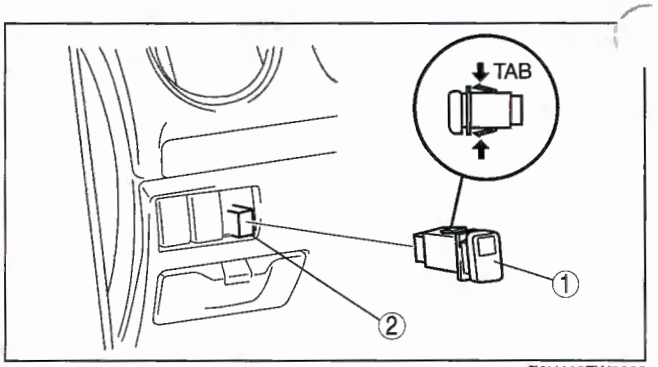

E6U413ZW5002

TCS Off Switch Removal Note

1. Insert your hand from the lower side of the dashboard and squeeze the tabs of the TCS off switch.
2. Pull the TCS off switch forward to remove it.

TCS OFF SWITCH INSPECTION

E6U041466400W02

1. Remove the TCS OFF switch.
2. Inspect for continuity between the TCS OFF switch terminals using an ohmmeter.
   - If not as specified, replace the TCS OFF switch.

: Bulb —O—O—: Continuity

Condition	Terminal			
	A	B	C	D
When the switch is pressed	O—⓪—O		O——O	
When the switch is released	O—⓪—O			

A6E6921W010

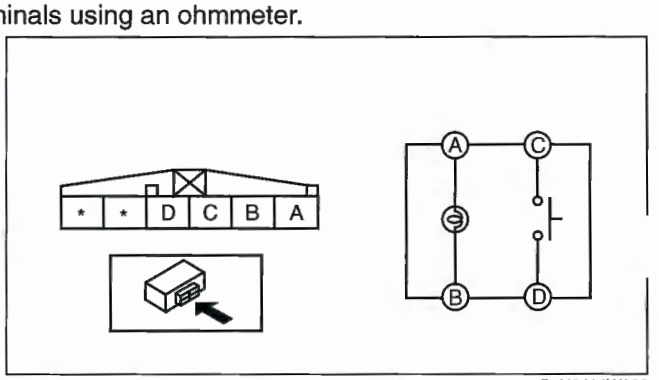

B6U0414W003

04–15 DYNAMIC STABILITY CONTROL

DSC LOCATION INDEX **04–15–2**
C SYSTEM WIRING DIAGRAM **04–15–3**
DSC SYSTEM INSPECTION **04–15–4**
Preparation **04–15–4**
Operation of DSC Inspection **04–15–4**
DSC Control Inspection **04–15–6**
DSC HU/CM REMOVAL/INSTALLATION **04–15–7**
Connector Removal Note **04–15–8**
Brake Pipe Removal Note **04–15–8**
DSC HU/CM Removal/Installation Note **04–15–8**
Brake Pipe Installation Note **04–15–8**
Connector Installation Note **04–15–8**
DSC HU/CM CONFIGURATION **04–15–9**
DSC HU/CM INSPECTION **04–15–9**
Terminal Voltage Table (Reference) ... **04–15–9**
FRONT ABS WHEEL-SPEED SENSOR REMOVAL/INSTALLATION **04–15–11**
FRONT/REAR ABS WHEEL-SPEED SENSOR INSPECTION **04–15–11**
REAR ABS WHEEL-SPEED SENSOR REMOVAL/INSTALLATION **04–15–11**
COMBINED SENSOR REMOVAL/INSTALLATION **04–15–12**
COMBINED SENSOR INSPECTION **04–15–12**
Lateral-G Sensor Inspection **04–15–12**
Yaw Late Sensor Inspection **04–15–13**
Forward-G Sensor Inspection **04–15–14**
COMBINED SENSOR INITIALIZATION PROCEDURE **04–15–14**
DSC OFF SWITCH REMOVAL/INSTALLATION **04–15–15**
DSC OFF Switch Removal Note **04–15–15**
DSC OFF SWITCH INSPECTION **04–15–15**

DSC LOCATION INDEX

E6U041500000W01

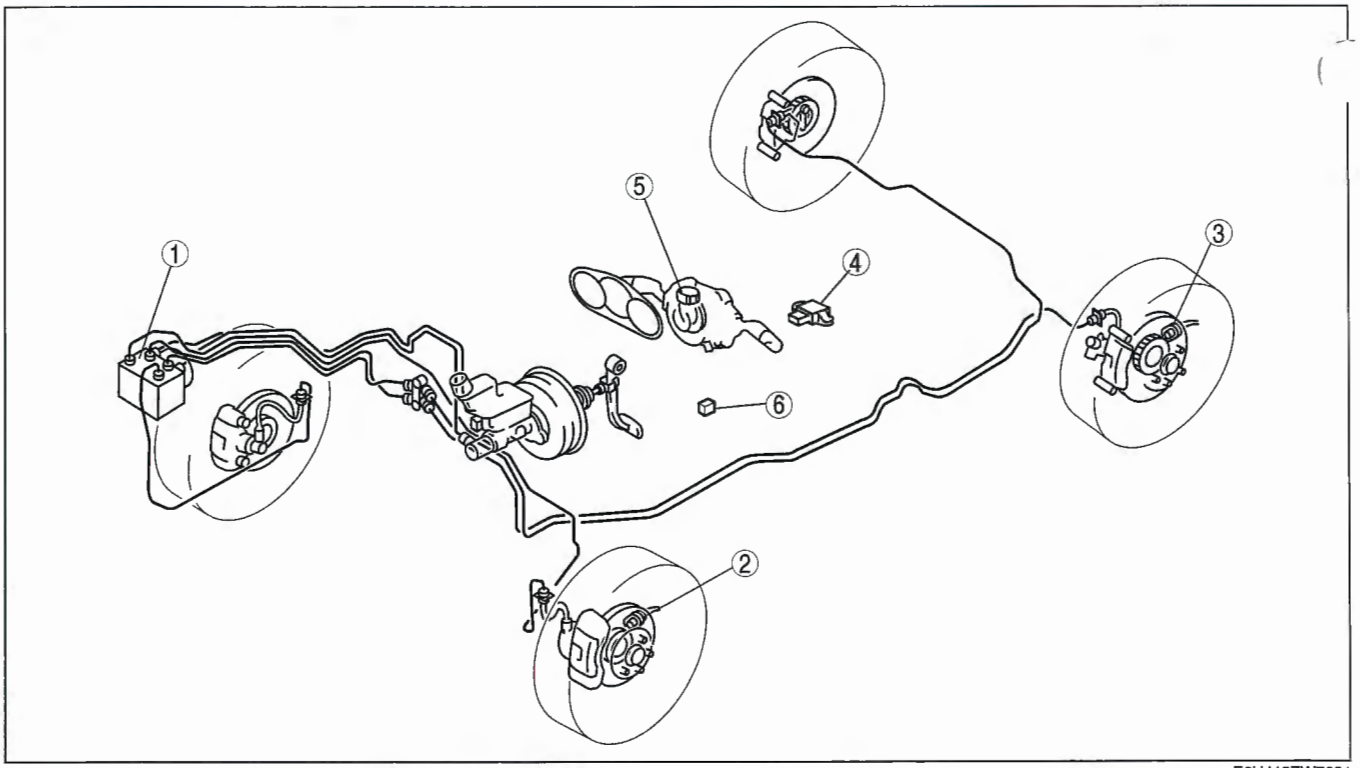

E6U415ZW7001

1	DSC HU/CM (See 04–15–3 DSC SYSTEM WIRING DIAGRAM.) (See04–15–4 DSC SYSTEM INSPECTION.) (See04–15–7 DSC HU/CM REMOVAL/ INSTALLATION.) (See04–15–9 DSC HU/CM CONFIGURATION.) (See04–15–9 DSC HU/CM INSPECTION.)
2	Front ABS wheel-speed sensor (See04–15–11 FRONT ABS WHEEL-SPEED SENSOR REMOVAL/INSTALLATION.) (See04–15–11 FRONT/REAR ABS WHEEL-SPEED SENSOR INSPECTION.)
3	Rear ABS wheel-speed sensor (See04–15–11 REAR ABS WHEEL-SPEED SENSOR REMOVAL/INSTALLATION.)
4	Combined sensor (See04–15–12 COMBINED SENSOR REMOVAL/ INSTALLATION.) (See04–15–12 COMBINED SENSOR INSPECTION.) (See04–15–14 COMBINED SENSOR INITIALIZATION PROCEDURE.)
5	Steering angle sensor (See09–18–19 COMBINATION SWITCH REMOVAL/INSTALLATION.) (See 09–18–20 COMBINATION SWITCH DISASSEMBLY/ASSEMBLY.) (See09–18–20 STEERING ANGLE SENSOR INSPECTION.)
6	DSC OFF switch (See04–15–15 DSC OFF SWITCH REMOVAL/ INSTALLATION.) (See04–15–15 DSC OFF SWITCH INSPECTION.)

DSC SYSTEM WIRING DIAGRAM

E6U041500000W02

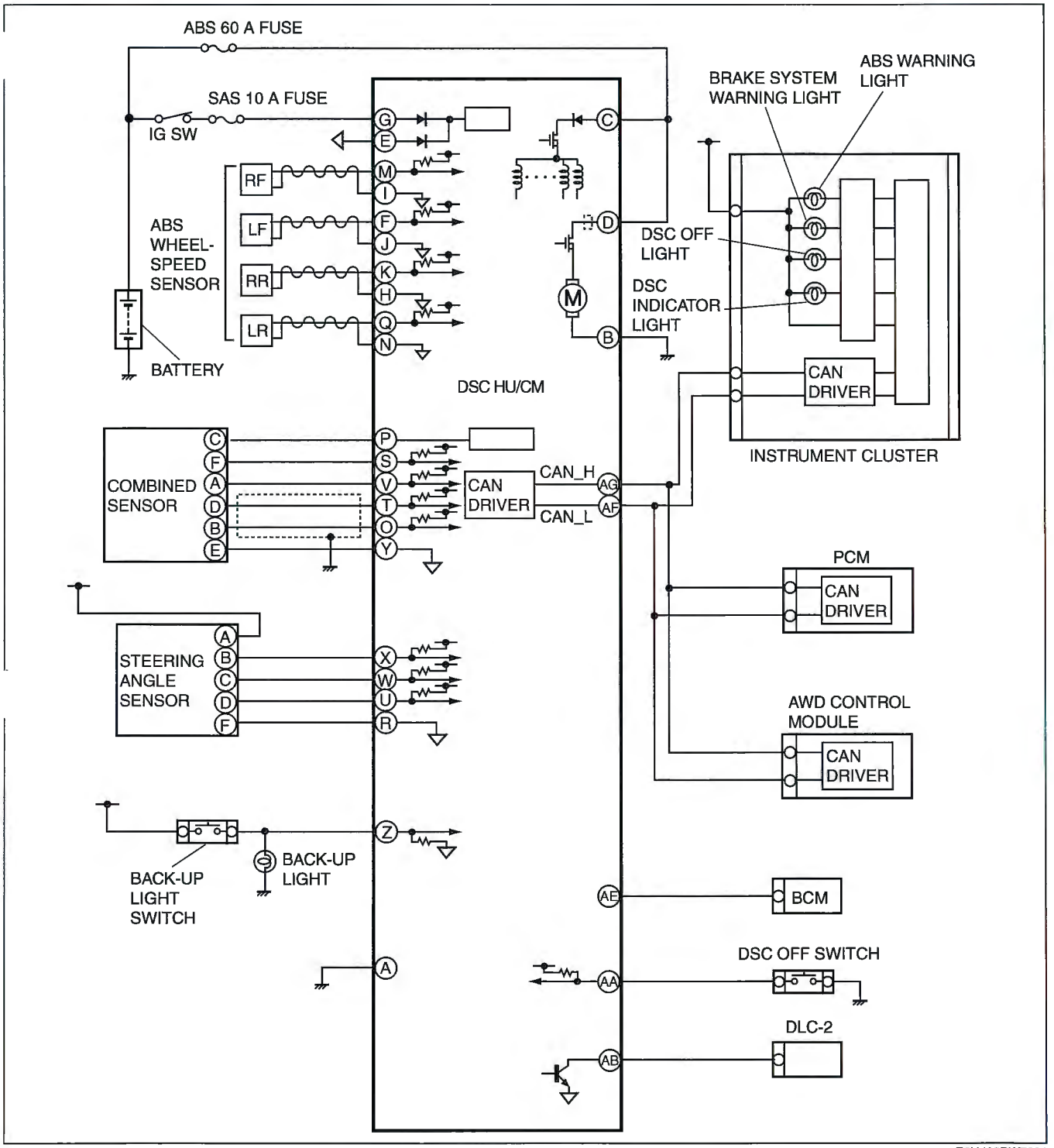

E6U402BW7001

DSC SYSTEM INSPECTION

E6U041500000W03

Preparation

1. Verify that the battery is fully charged.
2. With ignition switch on, verify that the ABS warning light goes out after **2.4 s.**
3. Turn the ignition switch off.
4. On level ground, jack up the vehicle and support it evenly on safety stands.
5. Shift the transaxle to N position.
6. Release the parking brake.
7. Rotate the wheels by hand, and inspect for brake drag.

Operation of DSC Inspection

1. Perform the "Preparation."
2. Connect WDS or equivalent to the DLC-2.
3. Set up an active command modes inspection according to the combination of commands below.

Note

- When working with two people, one should press on the brake pedal, the other should attempt to rotate the wheel being inspected.

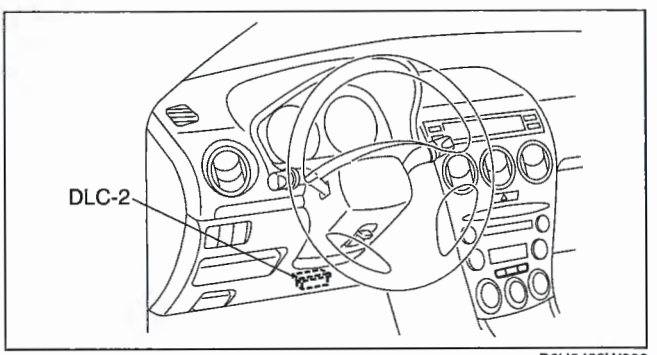

B6U0402W002

Pressure retention

<table>
<tr><th rowspan="2">Command name</th><th colspan="4">Wheels</th></tr>
<tr><th>LF</th><th>RF</th><th>LR</th><th>RR</th></tr>
<tr><td>LF_TC_VLV</td><td colspan="4" rowspan="4">OFF</td></tr>
<tr><td>RF_TC_VLV</td></tr>
<tr><td>LF_DSC_V</td></tr>
<tr><td>RF_DSC_V</td></tr>
<tr><td>ABS_POWER</td><td colspan="4">ON</td></tr>
<tr><td>LF_INLET</td><td>ON</td><td rowspan="4">OFF</td><td>OFF</td><td rowspan="5">OFF</td></tr>
<tr><td>LF_OUTLET</td><td rowspan="8">OFF</td><td>ON</td></tr>
<tr><td>LR_INLET</td><td rowspan="6">OFF</td></tr>
<tr><td>LR_OUTLET</td><td rowspan="5">OFF</td></tr>
<tr><td>RF_INLET</td><td>ON</td></tr>
<tr><td>RF_OUTLET</td><td rowspan="3">OFF</td></tr>
<tr><td>RR_INLET</td><td>ON</td></tr>
<tr><td>RR_OUTLET</td><td rowspan="2">OFF</td></tr>
<tr><td>PMP_MOTOR</td></tr>
</table>

Pressure reduction

<table>
<tr><th rowspan="2">Command name</th><th colspan="4">Wheels</th></tr>
<tr><th>LF</th><th>RF</th><th>LR</th><th>RR</th></tr>
<tr><td>LF_TC_VLV</td><td colspan="4" rowspan="4">OFF</td></tr>
<tr><td>RF_TC_VLV</td></tr>
<tr><td>LF_DSC_V</td></tr>
<tr><td>RF_DSC_V</td></tr>
<tr><td>ABS_POWER</td><td colspan="4">ON</td></tr>
<tr><td>LF_INLET</td><td rowspan="2">ON</td><td rowspan="3">OFF</td><td>OFF</td><td rowspan="3">OFF</td></tr>
<tr><td>LF_OUTLET</td><td rowspan="2">ON</td></tr>
<tr><td>LR_INLET</td><td rowspan="5">OFF</td></tr>
<tr><td>LR_OUTLET</td><td rowspan="3">OFF</td><td rowspan="2">ON</td></tr>
<tr><td>RF_INLET</td><td rowspan="3">OFF</td></tr>
<tr><td>RF_OUTLET</td><td rowspan="2">ON</td></tr>
<tr><td>RR_INLET</td><td rowspan="2">OFF</td></tr>
<tr><td>RR_OUTLET</td><td>ON</td></tr>
<tr><td>PMP_MOTOR</td><td colspan="4">ON</td></tr>
</table>

Note

- To protect the DSC HU/CM, the solenoid valve used for simulations and the ABS motor stay on for **10 s** each time they are switched on.

4. Send the command while pressing on the brake pedal and attempting to rotate the wheel being inspected.
5. When pressure is being maintained, and a click sound indicating the solenoid is operating comes from the DSC HU/CM, confirm that the wheel does not rotate. When pressure is being reduced, and a click sound indicating the solenoid is operating comes from DSC HU/CM, confirm that the wheel rotates, even though the brake pedal is being depressed.
   - Performing the inspections above determines the following.
     - — The DSC HU/CM brake lines are normal
     - — The DSC HU/CM hydraulic system is not significantly abnormal
     - — The DSC HU/CM wiring is normal
     - — Output system harness in DSC HU/CM (solenoid, relay) are normal
   - However, the following items cannot be checked.
     - — The DSC HU/CM input system harness and parts
     - — Extremely small leaks in the DSC HU/CM internal hydraulic system
     - — Unusual intermittent occurrences in the above items

DSC Control Inspection

1. Perform the "Preparation."
2. Connect WDS or equivalent to the DLC-2.
3. Set up an active command modes inspection according to the combination of commands below.

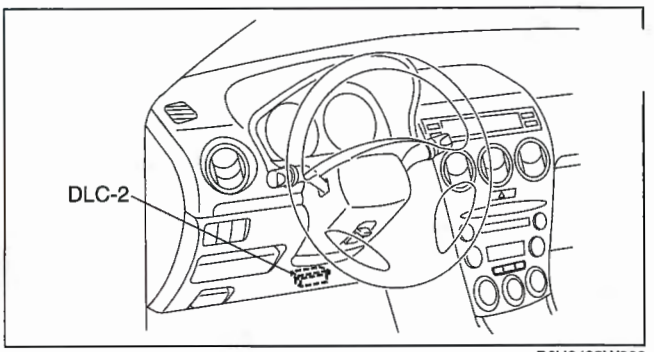

B6U0402W002

Pressure retention

<table>
<tr><th rowspan="2">Command name</th><th colspan="4">Wheels</th></tr>
<tr><th colspan="2">Inhibition of understeer tendency control</th><th colspan="2">Inhibition of oversteer tendency control</th></tr>
<tr><th>LF</th><th>RF</th><th>LR</th><th>RR</th></tr>
<tr><td>LF_TC_VLV</td><td>ON</td><td colspan="2">OFF</td><td>ON</td></tr>
<tr><td>RF_TC_VLV</td><td>OFF</td><td colspan="2">ON</td><td>OFF</td></tr>
<tr><td>LF_DSC_V</td><td colspan="4" rowspan="2">OFF</td></tr>
<tr><td>RF_DSC_V</td></tr>
<tr><td>ABS_POWER</td><td colspan="4">ON</td></tr>
<tr><td>LF_INLET</td><td rowspan="6">OFF</td><td rowspan="2">OFF</td><td rowspan="4">OFF</td><td>ON</td></tr>
<tr><td>LF_OUTLET</td><td rowspan="5">OFF</td></tr>
<tr><td>LR_INLET</td><td>ON</td></tr>
<tr><td>LR_OUTLET</td><td rowspan="4">OFF</td></tr>
<tr><td>RF_INLET</td><td>ON</td></tr>
<tr><td>RF_OUTLET</td><td rowspan="2">OFF</td></tr>
<tr><td>RR_INLET</td><td>ON</td></tr>
<tr><td>RR_OUTLET</td><td>OFF</td></tr>
<tr><td>PMP_MOTOR</td><td colspan="4">ON</td></tr>
</table>

Note

- To protect the DSC HU/CM, the solenoid valve used for simulations and the ABS motor stay on for **10 s** each time they are switched on.

4. Send the command while attempting to rotate the wheel being inspected.
5. When pressure is being maintained, and a click sound indicating the solenoid is operating comes from the DSC HU/CM, confirm that the wheel does not rotate.
   - Performing the inspections above determines the following.
     — The DSC HU/CM brake lines are normal
     — The DSC HU/CM hydraulic system is not significantly abnormal
     — The DSC HU/CM wiring is normal
     — Output system harness in DSC HU/CM (solenoid, relay) are normal
   - However, the following items cannot be checked.
     — The DSC HU/CM input system harness and parts
     — Extremely small leaks in the DSC HU/CM internal hydraulic system
     — Unusual intermittent occurrences in the above items

DSC HU/CM REMOVAL/INSTALLATION

E6U041543750W02

Caution

- **When replacing the DSC HU/CM, configuration procedure must be done before removing the DSC HU/CM. If configuration is not completed before removing the DSC HU/CM, DTC B2477 will be detected.**
- **The internal parts of the DSC HU/CM could be damaged if dropped. Be careful not to drop the DSC HU/CM. Replace the DSC HU/CM if it is subjected to an impact.**

1. Configurate the DSC HU/CM (only when replacing it). (See 04–15–9 DSC HU/CM CONFIGURATION.)
2. Remove in the order indicated in the table.
3. Install in the reverse order of removal.
4. Perform the initialization procedures for the combined sensor. (See 04–15–14 COMBINED SENSOR INITIALIZATION PROCEDURE.)

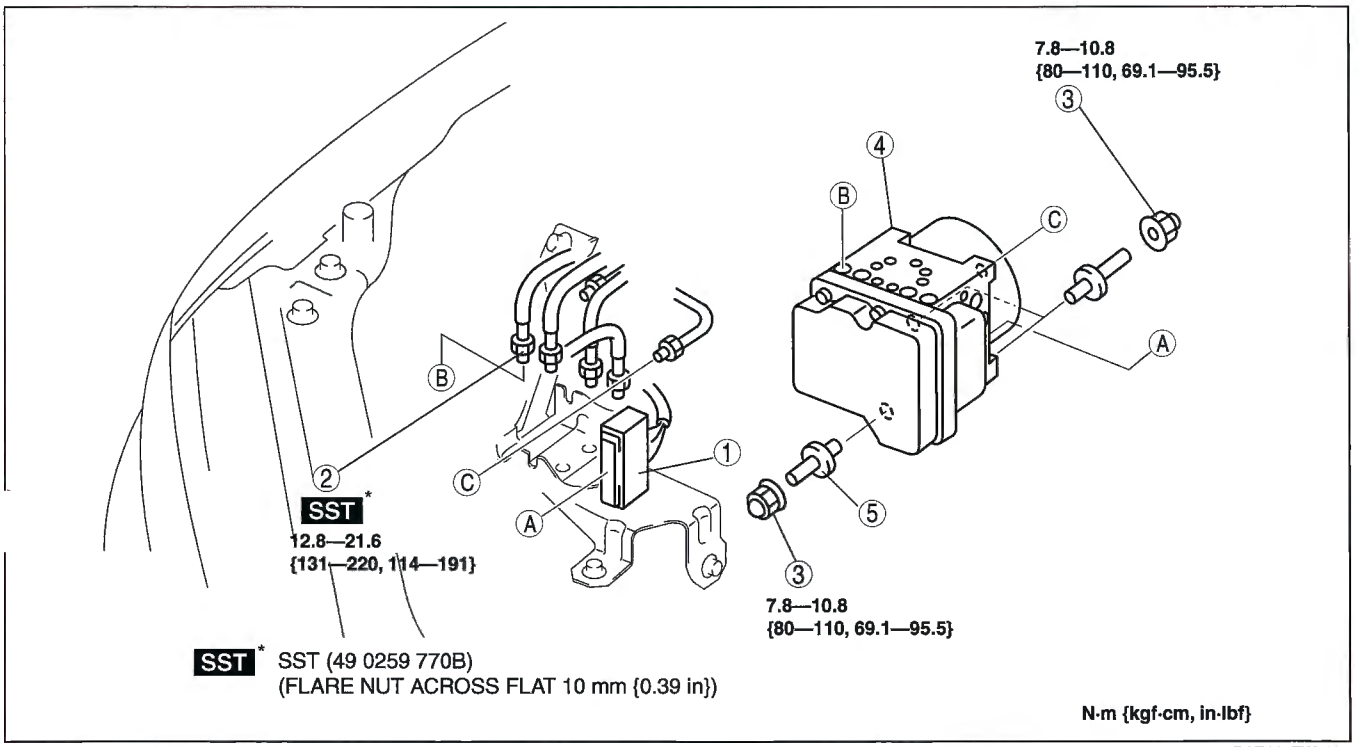

D6E415ZW5005

1	Connector (See 04–15–8 Connector Removal Note) (See 04–15–8 Connector Installation Note
2	Brake pipe (See 04–15–8 Brake Pipe Removal Note) (See 04–15–8 Brake Pipe Installation Note)
3	Nut

4	DSC HU/CM (See 04–15–8 DSC HU/CM Removal/Installation Note)
5	Stud

Connector Removal Note

1. Release the lock lever to unlock it.
2. Remove the connector.

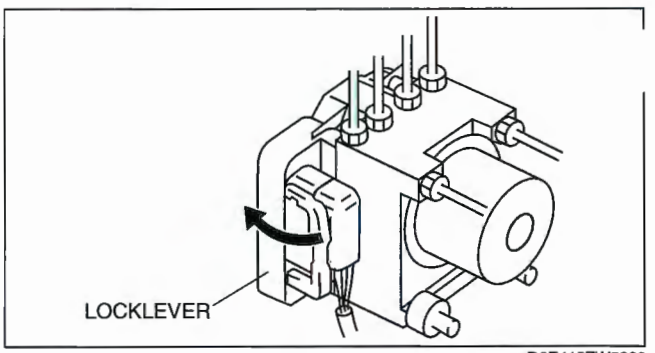

D6E415ZW5006

Brake Pipe Removal Note

1. Mark the brake pipe connecting positions before removal for reference during installation.

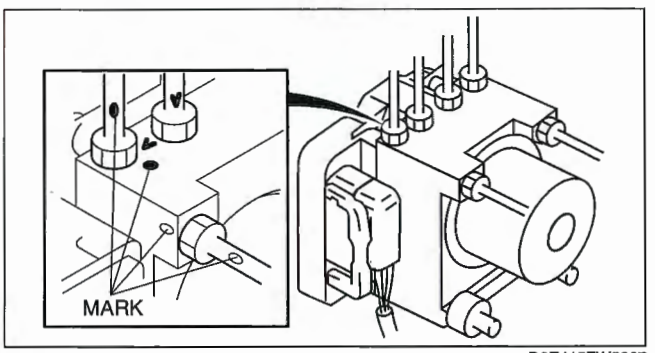

D6E415ZW5007

DSC HU/CM Removal/Installation Note

1. When removing/installing the DSC HU/CM from/to the vehicle, attach a strip of protective tape on the DSC H. CM connector to prevent brake fluid from entering.

Brake Pipe Installation Note

1. When installing the brake pipe, align the marks made before removal with the DSC HU/CM as shown in the figure.

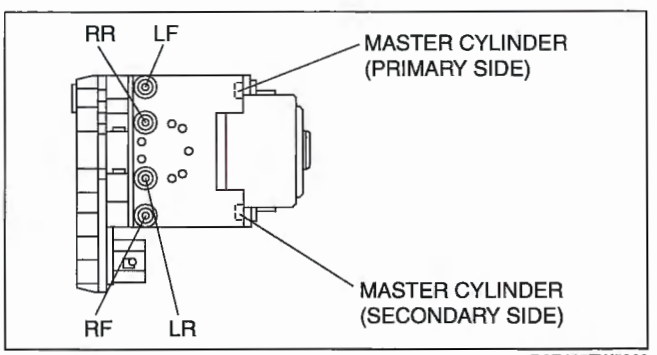

D6E415ZW5008

Connector Installation Note

1. Verify that the lock lever of the harness connector is securely locked.

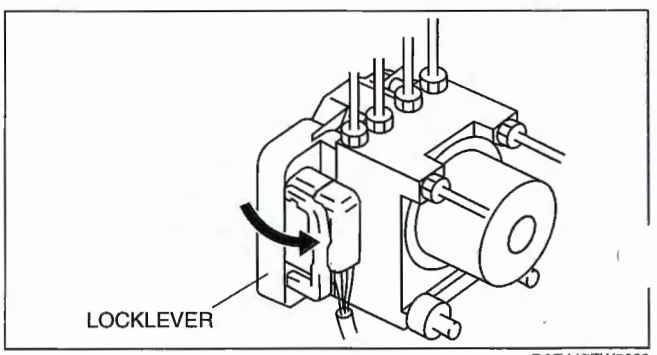

D6E415ZW5009

DSC HU/CM CONFIGURATION

E6U041543750W03

1. Connect the WDS or equivalent to the DLC-2.
2. Input vehicle information following the directions on the WDS or equivalent screen.
3. Select "MODULE PROGRAMMING".
4. Select "PROGRAMMABLE MODULE INSTALLATION".
5. Select "ABS/TCS".
6. Retrieve DTCs using the WDS or equivalent, then verify that there is no DTC present.
   - If any DTC is present, perform applicable DTC inspection.

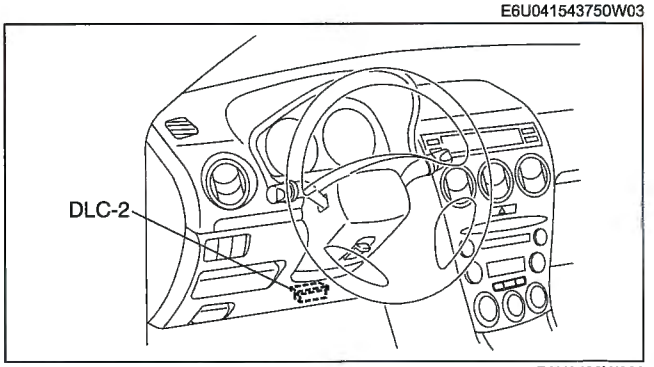

B6U0402W002

DSC HU/CM INSPECTION

E6U041543750W04

1. Disconnect the DSC HU/CM connector.
2. Connect the negative battery cable.
3. Attach the tester lead to the DSC HU/CM wiring harness-side connector, then inspect the voltage, continuity, or resistance according to the standard (reference) on the table.

Terminal Voltage Table (Reference)

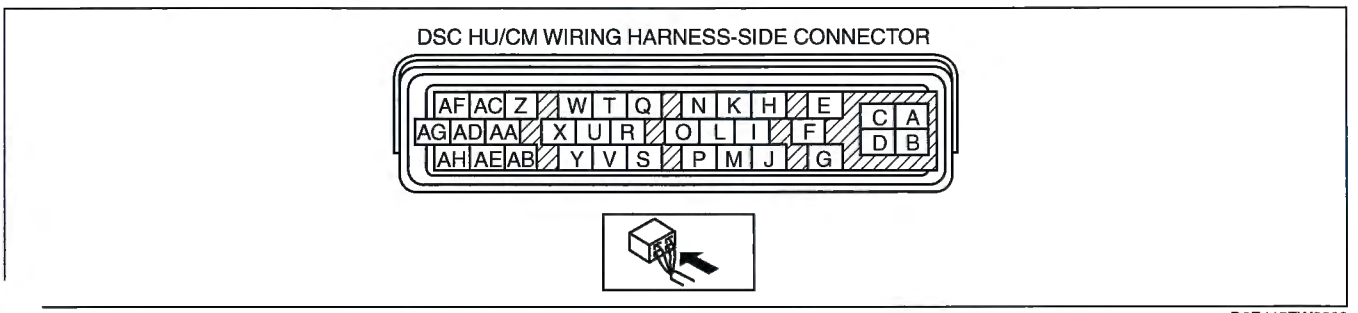

D6E415ZW3009

Terminal	Signal name	Connected to	Measured item	Measured terminal (measured condition)	Standard	Inspection item (s)
A	Ground (ABS system)	Ground point	Continuity	A—ground point	Continuity detected	• Wiring harness (A—ground point)
B	Ground (ABS motor)	Ground point	Continuity	B—ground point	Continuity detected	• Wiring harness (B—ground point)
C	Power supply (solenoid)	Battery	Voltage	Under any condition	B+	• Wiring harness (C—battery)
D	Power supply (ABS motor operation)	Battery	Voltage	Under any condition	B+	• Wiring harness (D—battery)
E	—	—	—	—	—	—
F	LF wheel-speed sensor (single)	LF ABS wheel-speed sensor	Continuity	F—LF ABS wheel-speed sensor connector terminal A	Continuity detected	• Wiring harness (F—LF ABS wheel-speed sensor connector terminal A)
G	Power supply (system)	Ignition switch	Voltage	Ignition switch at ON	B+	• Wiring harness (G—ignition switch)
				Ignition switch is off.	1 V or less	—
H	RR wheel-speed sensor (ground)	RR ABS wheel-speed sensor	Continuity	H—RR ABS wheel-speed sensor connector terminal B	Continuity detected	• Wiring harness (H—RR ABS wheel-speed sensor connector terminal B)
I	RF wheel-speed sensor (ground)	RF ABS wheel-speed sensor	Continuity	I—RF ABS wheel-speed sensor connector terminal B	Continuity detected	• Wiring harness (I—RF ABS wheel-speed sensor connector terminal B)
J	LF wheel-speed sensor (ground)	LF ABS wheel-speed sensor	Continuity	J—LF ABS wheel-speed sensor connector terminal B	Continuity detected	• Wiring harness (J—LF ABS wheel-speed sensor connector terminal B)

Terminal	Signal name	Connected to	Measured item	Measured terminal (measured condition)	Standard	Inspection item (s)
K	RR wheel-speed sensor (signal)	RR ABS wheel-speed sensor	Continuity	K—RR ABS wheel-speed sensor connector terminal A	Continuity detected	• Wiring harness (K—RR ABS wheel-speed sensor connector terminal A)
L	—	—	—	—	—	—
M	RF wheel-speed sensor (signal)	RF ABS wheel-speed sensor	Continuity	M—RF ABS wheel-speed sensor connector terminal A	Continuity detected	• Wiring harness (M—RF ABS wheel-speed sensor connector terminal A)
N	LR wheel-speed sensor (ground)	LR ABS wheel-speed sensor	Continuity	N—LR ABS wheel-speed sensor connector terminal A	Continuity detected	• Wiring harness (N—LR ABS wheel-speed sensor connector terminal A)
O	Lateral-G (lateral-G signal)	combined sensor	Continuity	O—combined sensor connector terminal B	Continuity detected	• Wiring harness (O—combined sensor connector terminal B)
P	combined sensor power output	combined sensor	Continuity	P—combined sensor connector terminal C	Continuity detected	• Wiring harness (P—combined sensor connector terminal C)
Q	LR wheel-speed sensor (signal)	LR ABS wheel-speed sensor	Continuity	Q—LR ABS wheel-speed sensor connector terminal A	Continuity detected	• Wiring harness (Q—LR ABS wheel-speed sensor connector terminal A)
R	Steering angle (ground)	Steering angle sensor	Continuity	R—steering angle sensor connector terminal F	Continuity detected	• Wiring harness (R—steering angle sensor connector terminal F)
S	Combined sensor	combined sensor	Continuity	S—combined sensor connector terminal F	Continuity detected	• Wiring harness (S—combined sensor connector terminal F)
T	Yaw rate (yaw rate signal)	combined sensor	Continuity	T—combined sensor connector terminal D	Continuity detected	• Wiring harness (T—combined sensor connector terminal D)
U	Steering angle (neutral signal)	Steering angle sensor	Continuity	U—steering angle sensor connector terminal D	Continuity detected	• Wiring harness (U—steering angle sensor connector terminal D)
V	Forward-G (forward-G signal)	Combined sensor	Continuity	V—combined sensor connector terminal A	Continuity detected	• Wiring harness (V—combined sensor connector terminal A)
W	Steering angle (steering angle signal 2)	Steering angle sensor	Continuity	W—steering angle sensor connector terminal C	Continuity detected	• Wiring harness (W—steering angle sensor connector terminal C)
X	Steering angle (steering angle signal 1)	Steering angle sensor	Continuity	X—steering angle sensor connector terminal B	Continuity detected	• Wiring harness (X—steering angle sensor connector terminal B)
Y	Combined sensor (ground)	combined sensor	Continuity	Y—combined sensor connector terminal E	Continuity detected	• Wiring harness (Y—combined sensor connector terminal E)
Z	Back-up light switch	Back-up light switch	Voltage	When shift lever position is reverse	B+	• Wiring harness (Z—back-up light switch) • Back-up light switch
				Other	Below 1.0	
AA	DSC OFF switch	DSC OFF switch	Continuity	AA—DSC OFF switch	Continuity detected	• Wiring harness (AA—DSC OFF switch)
AB	KLN	DLC-2 (KLN)	Continuity	AB—DLC-2 terminal KLN	Continuity detected	• Wiring harness (AB—DLC-2 terminal KLN)
AC	—	—	—	—	—	—
AD	—	—	—	—	—	—
AE	Vehicle speed output	BCM	Continuity	AE—BCM terminal connector 9B	Continuity detected	• Wiring harness (AE—BCM terminal connector 9B)
AF	CAN_L	DLC-2 (CAN_L)	Continuity	R—DLC-2 terminal CAN_L	Continuity detected	• Wiring harness (AF—DLC-2 terminal CAN_L)
AG	CAN_H	DLC-2 (CAN_H)	Continuity	O—DLC-2 terminal CAN_H	Continuity detected	• Wiring harness (AG—DLC-2 terminal CAN_H)
AH	—	—	—	—	—	—

FRONT ABS WHEEL-SPEED SENSOR REMOVAL/INSTALLATION

E6U041543720W01

1. Remove or install the front ABS wheel-speed sensor in the same order of vehicles with ABS. (See 04–13–8 FRONT ABS WHEEL-SPEED SENSOR REMOVAL/INSTALLATION.)

FRONT/REAR ABS WHEEL-SPEED SENSOR INSPECTION

E6U041543720W02

1. Inspect the front ABS wheel-speed sensor in the same order of vehicles with ABS. (See 04–13–9 FRONT/REAR ABS WHEEL-SPEED SENSOR INSPECTION.)

REAR ABS WHEEL-SPEED SENSOR REMOVAL/INSTALLATION

E6U041543710W01

1. Remove the tire house trim. (See 09–17–15 TIRE HOUSE TRIM REMOVAL/INSTALLATION.)
2. Remove in the order indicated in the table.
3. Install in the reverse order of removal.

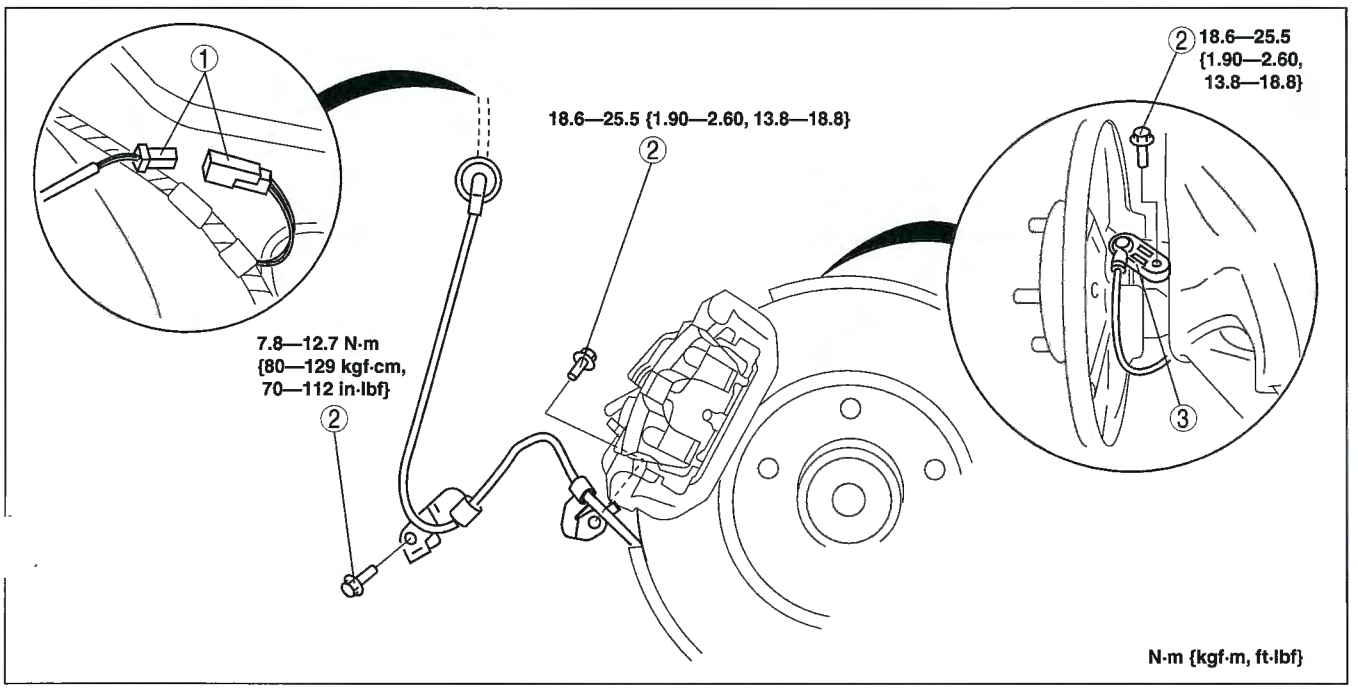

E6U415ZW7002

1	Connector
2	Bolt

3	Rear ABS wheel-speed sensor

COMBINED SENSOR REMOVAL/INSTALLATION

E6U041543773W01

Caution
- **The internal parts of the combined sensor could be damaged if dropped. Be careful not to drop th combined sensor. Replace the combined sensor if it is subjected to an impact. Also, do not use a impact wrench or other similar air tools when removing/installing the sensor.**

1. Remove the console. (See 09–17–8 CONSOLE REMOVAL/INSTALLATION.)
2. Remove in the order indicated in the table.

1	Combined sensor connector
2	Combined sensor

3. Install in the reverse order of removal.
4. After installation, perform the combined sensor initialization procedure. (See 04–15–14 COMBINED SENSOR INITIALIZATION PROCEDURE.)

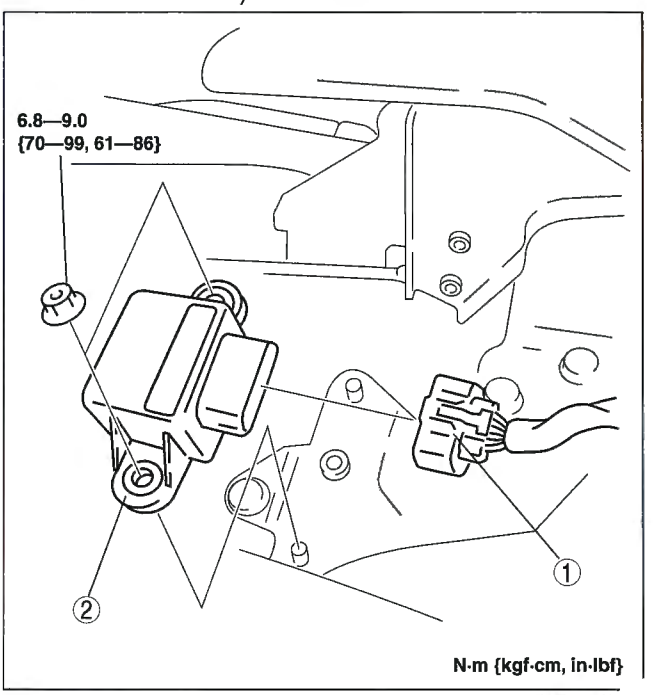

A6E6920W

COMBINED SENSOR INSPECTION

E6U041543773W02

Caution
- **The internal parts of the combined sensor could be damaged if dropped. Be careful not to drop the combined sensor. Replace the combined sensor if it is subjected to an impact. Also, do not use an impact wrench or other similar air tools when removing/installing the sensor.**

Lateral-G Sensor Inspection

1. Connect the connector.
2. Turn ignition switch on, verify the voltage between terminals B and ground terminal E under the following conditions.
   - If not within the specification, replace the combined sensor.

   (1) Horizontal

Voltage
2.4—2.6 V

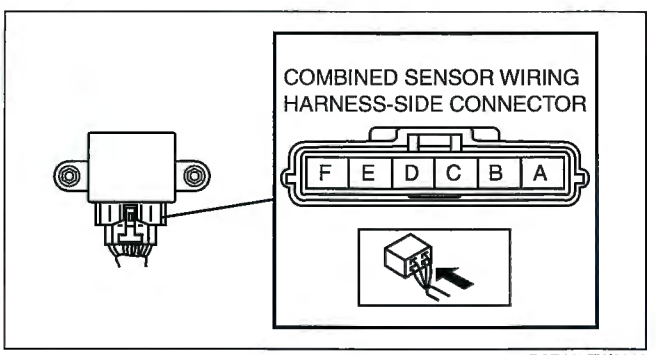

D6E415ZW3010

(2) Facing up (inclined **90°** from horizontal)

Voltage
3.3—3.7 V

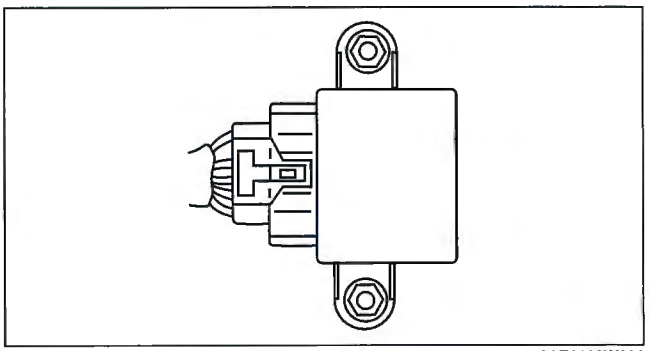
A6E6920W002

(3) Facing down (declined **90°** from horizontal)

Voltage
1.3—1.7 V

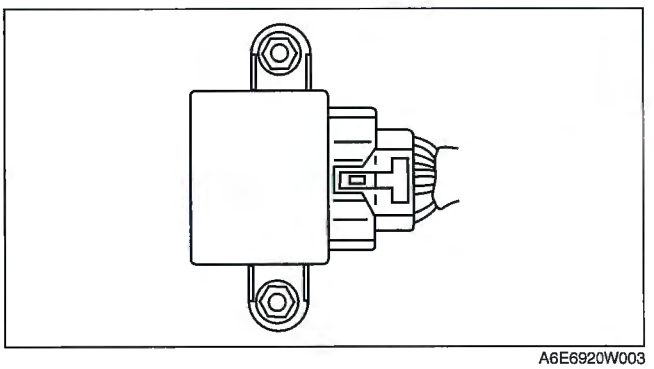
A6E6920W003

Yaw Late Sensor Inspection

1. Connect the connector.
2. Turn ignition switch on, verify the voltage between terminals D and ground terminal E under the following conditions.
   (1) Measure combined sensor voltage under static condition.

Voltage
2.3—2.7 V

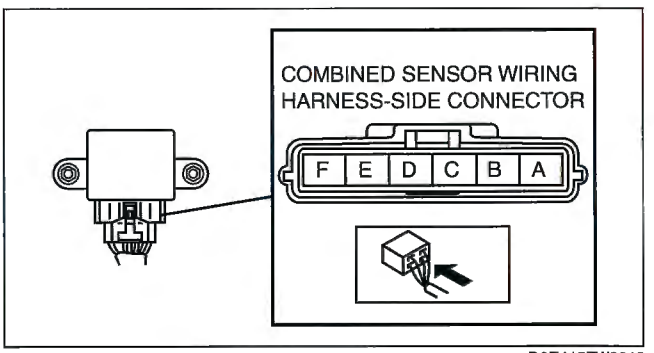

D6E415ZW3010

(2) Measure voltage at output terminal D and ground terminal E when the combined sensor is rotated left and right.

Caution
- **Be careful when turning the combined sensor rotation position while it is in a reversed state because the rotation direction and voltage will be reversed.**

Voltage
Right rotation: fluctuation between 2.5—4.62 V
Left rotation: fluctuation between 2.5—0.33 V

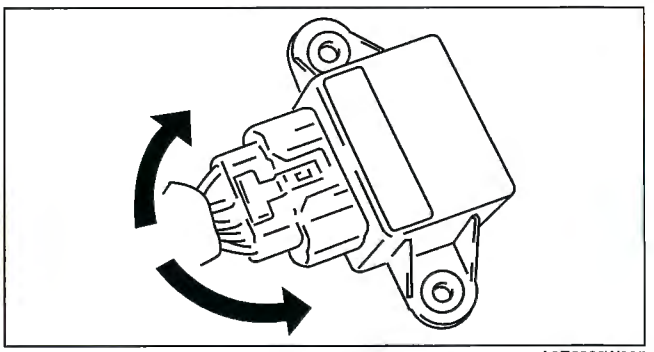
A6E6920W005

Forward-G Sensor Inspection

1. Connect the connector.
2. Turn ignition switch on, verify the voltage between terminals A and ground terminal E under the following conditions.
   (1) Horizontal

Voltage
2.2—2.8 V

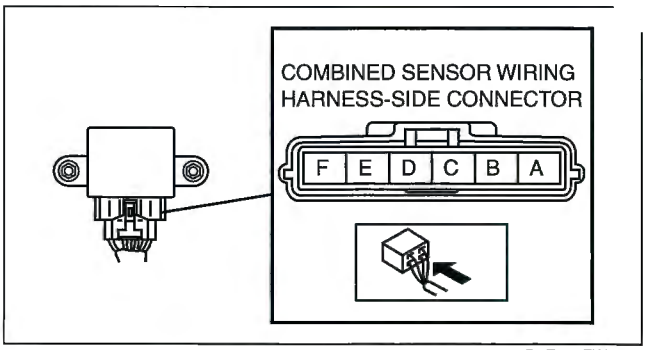

D6E415ZW3010

(2) Acceleration (inclined **90°** from horizontal)

Voltage
3.1—3.9 V

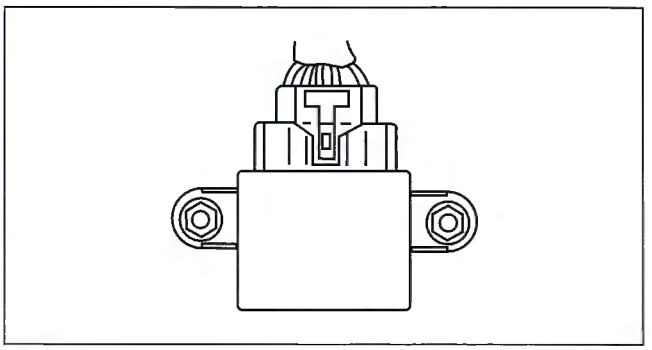

A6J6920W104

(3) Deceleration (decline **90°** from horizontal)

Voltage
1.2—1.8 V

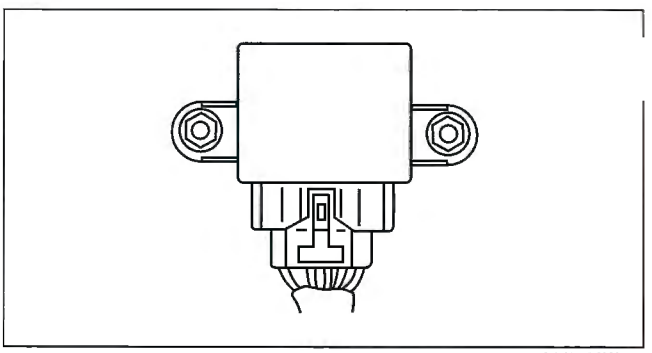

A6J6920W103

COMBINED SENSOR INITIALIZATION PROCEDURE

1. Set the WDS or equivalent to the DLC-2.
2. Access the active command mode and select the YAWRATE, then follow the indication on the monitor.
3. Select the LATACCEL and follow the indication on the monitor.

E6U041543773W03

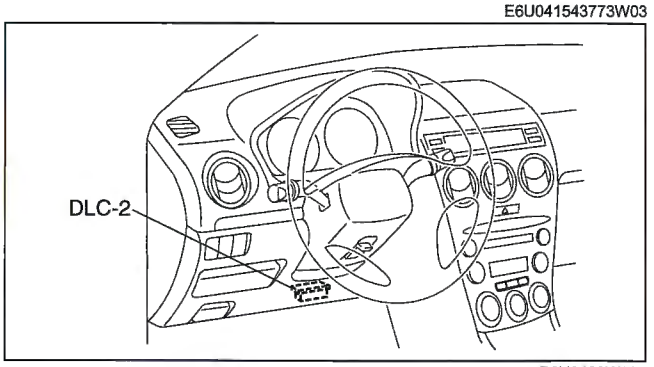

B6U0402W002

DSC OFF SWITCH REMOVAL/INSTALLATION

E6U041566410W01

1. Disconnect the negative battery cable.
2. Remove in the order indicated in the table.

1	DSC OFF switch (See 04–15–15 DSC OFF Switch Removal Note)
2	Connector

3. Install in the reverse order of removal.

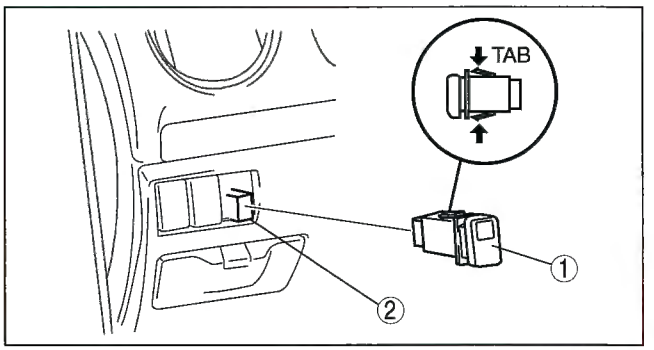

E6U413ZW5002

DSC OFF Switch Removal Note

1. Insert your hand from the lower side of the dashboard and squeeze the tabs of the DSC OFF switch.
2. Pull the DSC OFF switch forward to remove it.

DSC OFF SWITCH INSPECTION

E6U041566410W02

1. Remove the DSC OFF switch.
2. Inspect for continuity between the DSC OFF switch terminals using an ohmmeter.

○-⊗-○ : Bulb ○—○: Continuity

Condition	Terminal			
	A	B	C	D
When the switch is pressed	○—⊗—○		○—○	
When the switch is released	○—⊗—○			

A6E6921W010

- If not within the specification, replace the DSC OFF switch.

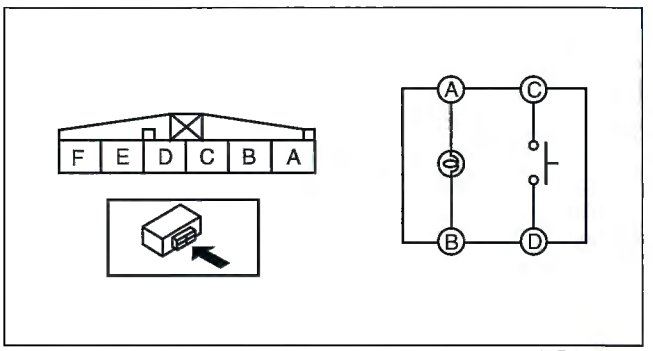

A6E6921W009

04–50 TECHNICAL DATA

BRAKES TECHNICAL DATA 04–50–1

BRAKES TECHNICAL DATA

E6U045000000W01

Item	Specification
Brake fluid type	SAE J1703, FMVSS 116 DOT-3
Brake pedal height (reference value)	187 mm {7.36 in}
Brake pedal play	0—3 mm {0—0.1 in}
Brake pedal-to-floor clearance (Brake pedal when depressed at 147 N {15.0 kgf, 33 lbf})	68 mm {2.7 in} min.
Power brake unit fluid pressure when pedal depressed at 200 N {20 kgf, 44 lbf}	At 0 kPa {0 mmHg, 0 inHg}: 590 kPa {6.02 kgf/cm^2, 85.6 psi}
Power brake unit fluid pressure when pedal depressed at 200 N {20 kgf, 44 lbf}	At 66.7 kPa {500 mmHg, 19.7 inHg}: 8,780 kPa {89.53 kgf/cm^2, 1,273 psi}
Dual proportioning valve fluid pressure (without ABS (ABS/TCS) or DSC)	Rear brake fluid pressure when front brake fluid pressure at 2,450 kPa {24.98 kgf/cm^2, 355.3 psi}: 2,250 kPa {22.95 kgf/cm^2, 326.4 psi} — 2,650 kPa {27.02 kgf/cm^2, 384.3 psi} Rear brake fluid pressure when front brake fluid pressure at 5,880 kPa {60 kgf/cm^2, 853 psi}: 3,180 kPa {32.43 kgf/cm^2, 461.3 psi}—3,780 kPa {38.54 kgf/cm^2, 548.2 psi}
Front disc plate runout limit	0.05 mm {0.002 in}
Minimum front disc plate thickness	23 mm {0.91 in}
Minimum front disc plate thickness after machining using a brake lathe on-vehicle	23.8 mm {0.94 in}
Minimum front disc pad thickness	L3, AJ: 2.0 mm {0.079 in} min. L3 WITH TC: 1.5 mm {0.059 in} min.
Rear disc plate runout limit	0.05 mm {0.002 in}
Minimum rear disc plate thickness	L3, AJ: 8 mm {0.31 in} L3 WITH TC: 9 mm {0.35 in}
Minimum rear disc plate thickness after machining using a brake lathe on-vehicle	L3, AJ: 8.8 mm {0.35 in} L3 WITH TC: 9.8 mm {0.39 in}
Minimum rear disc pad thickness	2.0 mm {0.079 in} min.
Parking brake lever stroke when pulled at 98 N {10 kgf, 22 lbf}	2—5 notches

04–60 SERVICE TOOLS

BRAKES SST 04–60–1

BRAKES SST

E6U046000000W01

49 0259 770B Flare nut wrench 	49 U043 0A0A Oil pressure gauge set 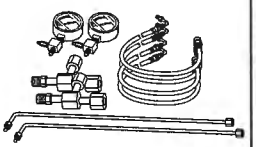	49 0221 600C Disc brake expand tool 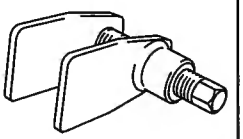
49 FA18 602 Disc brake piston wrench 	49 G043 001 Gauge 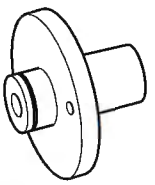	49 E043 003A Turning lock tool 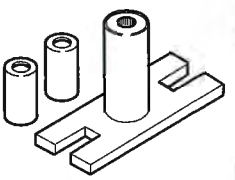
49 B043 004 Socket wrench 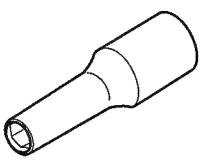	49 0208 701A Boot air out tool 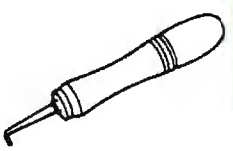	418-FS475 WDS 

TRANSMISSION/TRANSAXLE

05 SECTION

ON-BOARD DIAGNOSTIC [FS5A-EL] 05-02A
ON-BOARD DIAGNOSTIC [AW6A-EL] 05-02B
SYMPTOM TROUBLESHOOTING [FS5A-EL] 05-03A
SYMPTOM TROUBLESHOOTING [AW6A-EL] 05-03B
CLUTCH 05-10
MANUAL TRANSAXLE [G35M-R] 05-15A
MANUAL TRANSAXLE [A65M-R] 05-15B
MANUAL TRANSAXLE [A26MX-R] 05-15C
MANUAL TRANSAXLE SHIFT MECHANISM 05-16
AUTOMATIC TRANSAXLE [FS5A-EL] 05-17A
AUTOMATIC TRANSAXLE [AW6A-EL] 05-17B
AUTOMATIC TRANSAXLE SHIFT MECHANISM 05-18
TECHNICAL DATA 05-50
SERVICE TOOLS 05-60

05–02A ON-BOARD DIAGNOSTIC [FS5A-EL]

JTOMATIC TRANSAXLE CONTROL SYSTEM WIRING DIAGRAM [FS5A-EL] 05–02A–2
FOREWORD [FS5A-EL] 05–02A–3
AUTOMATIC TRANSAXLE ON-BOARD DIAGNOSTIC FUNCTION [FS5A-EL] 05–02A–3
DTC Reading Procedure 05–02A–3
AFTER REPAIR PROCEDURE [FS5A-EL] 05–02A–4
DTC TABLE [FS5A-EL] 05–02A–8
DTC P0706 [FS5A-EL] 05–02A–11
DTC P0707 [FS5A-EL] 05–02A–12
DTC P0708 [FS5A-EL] 05–02A–14
DTC P0711 [FS5A-EL] 05–02A–16
DTC P0712 [FS5A-EL] 05–02A–17
DTC P0713 [FS5A-EL] 05–02A–19
DTC P0715 [FS5A-EL] 05–02A–21
DTC P0720 [FS5A-EL] 05–02A–23
DTC P0731 [FS5A-EL] 05–02A–25
DTC P0732 [FS5A-EL] 05–02A–27
DTC P0733 [FS5A-EL] 05–02A–29
DTC P0734 [FS5A-EL] 05–02A–31
DTC P0735 [FS5A-EL] 05–02A–33
DTC P0741 [FS5A-EL] 05–02A–35
DTC P0742 [FS5A-EL] 05–02A–37
DTC P0744 [FS5A-EL] 05–02A–39
DTC P0745 [FS5A-EL] 05–02A–40
DTC P0751 [FS5A-EL] 05–02A–42
DTC P0752 [FS5A-EL] 05–02A–44
DTC P0753 [FS5A-EL] 05–02A–46
DTC P0756 [FS5A-EL] 05–02A–48
DTC P0757 [FS5A-EL] 05–02A–50
DTC P0758 [FS5A-EL] 05–02A–52
DTC P0761 [FS5A-EL] 05–02A–54
DTC P0762 [FS5A-EL] 05–02A–56
DTC P0763 [FS5A-EL] 05–02A–58
DTC P0766 [FS5A-EL] 05–02A–60
DTC P0767 [FS5A-EL] 05–02A–62
DTC P0768 [FS5A-EL] 05–02A–64
DTC P0771 [FS5A-EL] 05–02A–66
DTC P0772 [FS5A-EL] 05–02A–68
DTC P0773 [FS5A-EL] 05–02A–70
DTC P0777 [FS5A-EL] 05–02A–72
DTC P0778 [FS5A-EL] 05–02A–74
DTC P0791 [FS5A-EL] 05–02A–76
DTC P0841 [FS5A-EL] 05–02A–79
DTC P0882 [FS5A-EL] 05–02A–81
DTC P0894 [FS5A-EL] 05–02A–83
DTC P1783 [FS5A-EL] 05–02A–83
DTC P2707 [FS5A-EL] 05–02A–85
DTC P2708 [FS5A-EL] 05–02A–87
DTC P2709 [FS5A-EL] 05–02A–89
PID/DATA MONITOR INSPECTION [FS5A-EL] 05–02A–91

AUTOMATIC TRANSAXLE CONTROL SYSTEM WIRING DIAGRAM [FS5A-EL]

E6U050200000W57

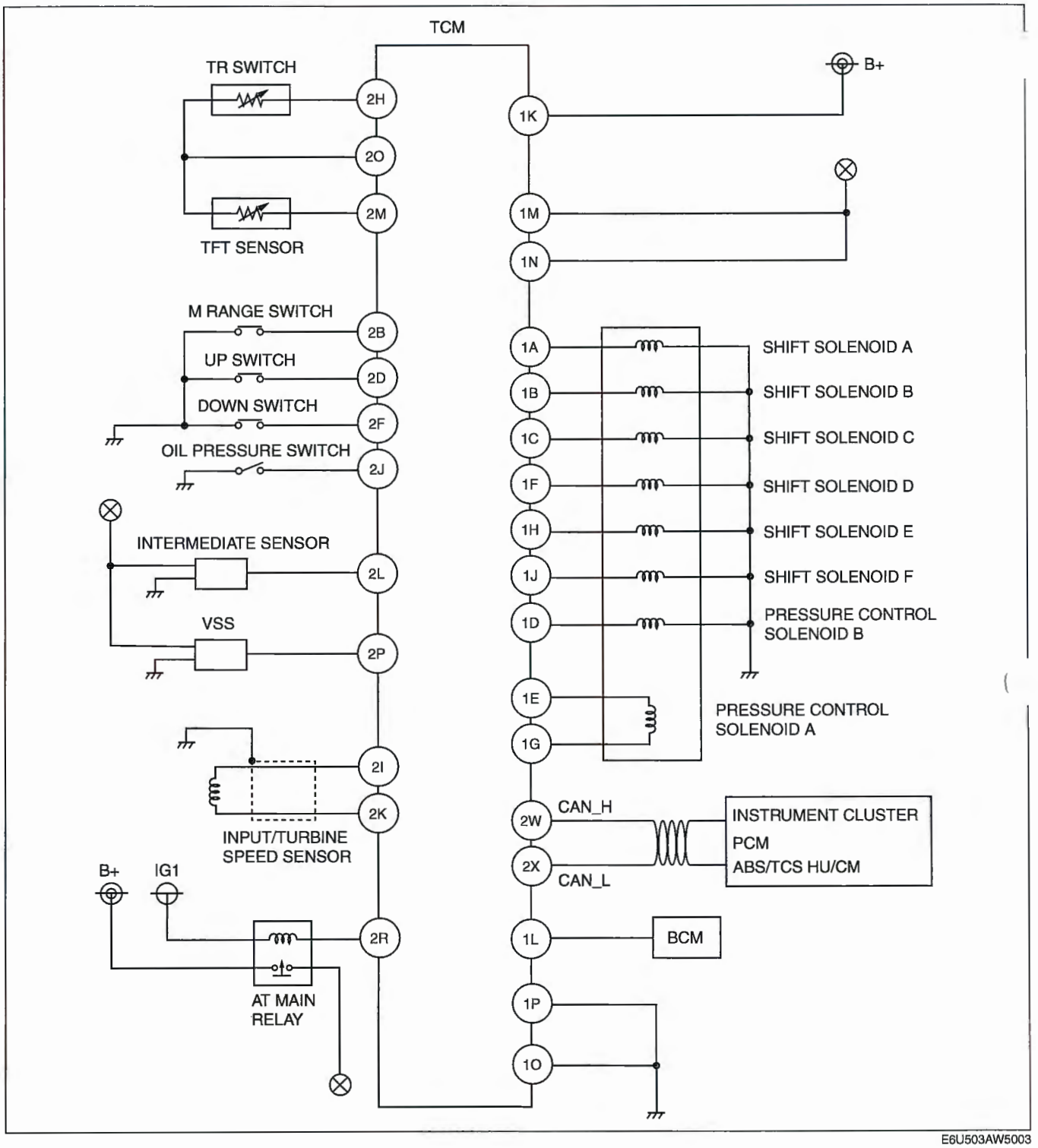

E6U503AW5003

FOREWORD [FS5A-EL]

E6U050200000W58

- When the customer reports a vehicle malfunction, inspect the malfunction indicator lamp (MIL), AT warning light indication, and TCM memory for diagnostic trouble code (DTC), then diagnose the malfunction according to the following flowchart.
  - — If a DTC exists, diagnose the applicable DTC. (See 05–02A–8 DTC TABLE [FS5A-EL].)
  - — If no DTC exists, the MIL does not illuminate, and AT warning light does not illuminate. Diagnose the applicable symptom troubleshooting. (See 05–03A–5 SYMPTOM TROUBLESHOOTING ITEM TABLE [FS5A-EL].)

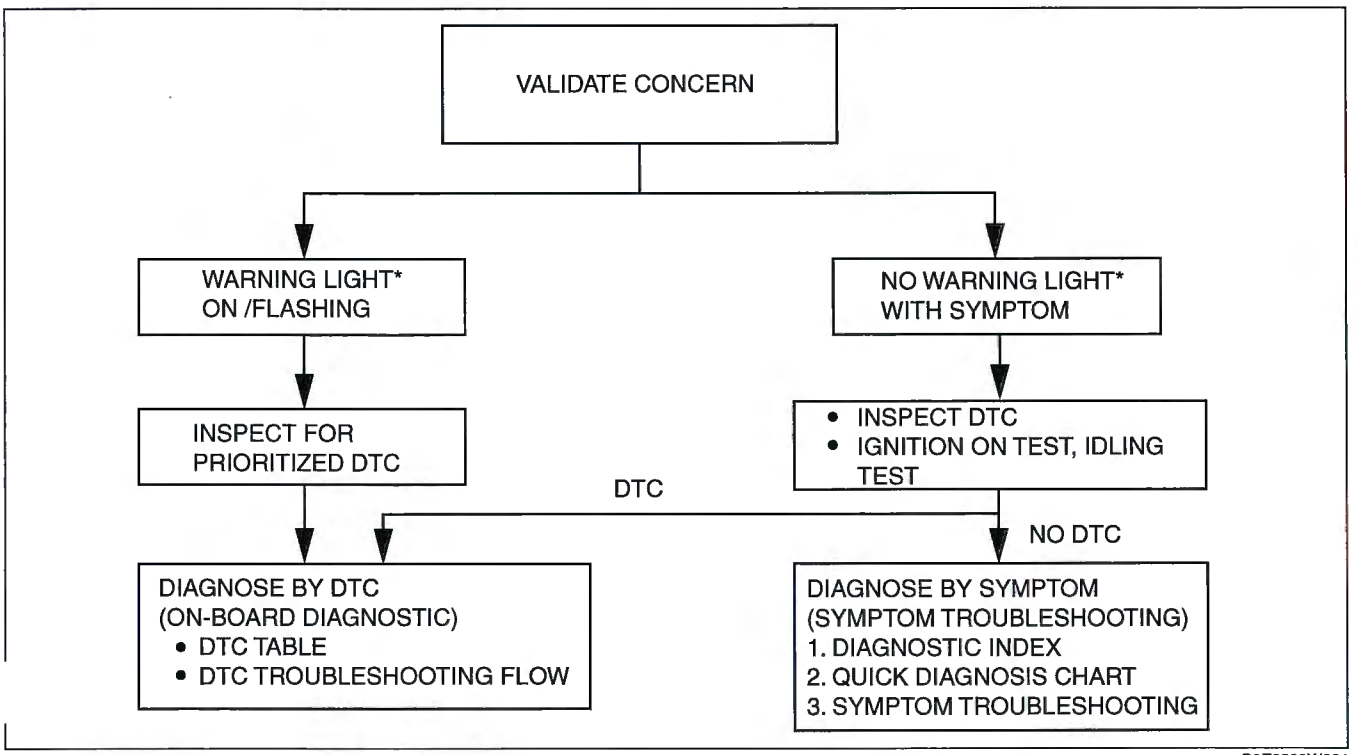

B3E0502W001

*: Malfunction indicator lamp (MIL), AT warning light

AUTOMATIC TRANSAXLE ON-BOARD DIAGNOSTIC FUNCTION [FS5A-EL]

E6U050200000W59

DTC Reading Procedure

1. Perform the necessary vehicle preparation and visual inspection.
2. Connect the WDS or equivalent to the vehicle DLC-2 16-pin connector located at the left side of the dashboard.
3. Retrieve DTCs using the WDS or equivalent.

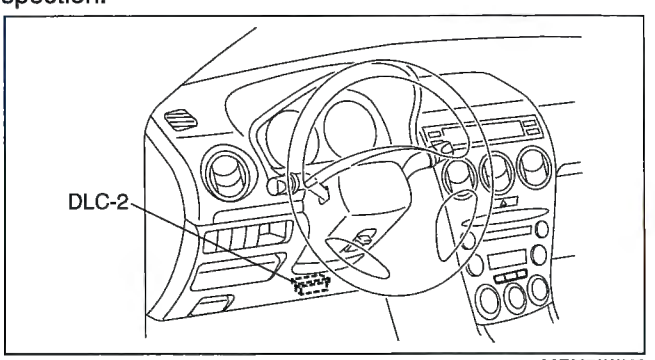

A6E3970W002

AFTER REPAIR PROCEDURE [FS5A-EL]

E6U050200000W60

Caution

- **After repairing a malfunction, perform the following procedure to verify that the malfunction has been corrected.**
- **When performing this procedure, be sure to drive the vehicle at lawful speed and pay attention to the other vehicles.**

1. Connect the WDS or equivalent to the DLC-2.
2. Turn the ignition switch to the ON position (engine off).
3. Verify that DTCs are cleared from memory.
4. Perform the following DTC inspections to ensure that the DTCs have been resolved:

DTC No.	inspection
P0706, P0707, P0708	i. Start the engine. ii. Warm up the engine and ATX. iii. Drive the vehicle in D range at **20 km/h {12.4 mph} or more** for **100 s or more**. iv. Turn the ignition switch to the LOCK position. v. Start the engine. vi. Drive the vehicle in D range at **20 km/h {12.4 mph} or more** for **100 s or more**. vii. Go to Step 5.
P0711	i. Start the engine then wait **180 s or more**. ii. Warm up the engine and ATX. iii. Drive the vehicle in D range, at **within 25—59 km/h {16—36 mph}** for **90 s or more**. iv. Drive the vehicle in D range, at **60 km/h {37 mph}** for **60 s or more**. v. Turn the ignition switch to the LOCK position. vi. Start the engine. vii. Drive the vehicle in D range, at **within 25—59 km/h {16—36 mph}** for **90 s or more**. viii. Drive the vehicle in D range, at **60 km/h {37 mph} or more** for **60 s or more**. ix. Go to Step 5.
P0712, P0713	i. Start the engine. ii. Warm up the engine and ATX. iii. Drive the vehicle in D range, at **20 km/h {12 mph} or more** for **150 s or more**. iv. Go to Step 5.
P0715	i. Start the engine. ii. Warm up the engine and ATX. iii. Drive the vehicle in D range, at **41 km/h {25 mph} or more** for **0.7 s or more**. iv. Go to Step 5.
P0720	i. Start the engine. ii. Warm up the engine and ATX. iii. Drive the vehicle under the following conditions for **4.5 s or more**. • Turbine speed (TSS PID): **1,500 rpm or more** • Selector lever position: D range, 1GR iv. Turn the ignition switch to the LOCK position. v. Start the engine. vi. Drive the vehicle under the following conditions for **4.5 s or more**. • Turbine speed (TSS PID): **1,500 rpm or more** • Selector lever position: D range, 1GR vii. Go to Step 5.
P0731	i. Start the engine. ii. Warm up the engine and ATX. iii. Drive the vehicle under the following conditions 4 times or more. • Turbine speed (TSS PID): **225—4,987 rpm** • Selector lever position: D or M range, 1GR • Throttle opening angle (THOP PID): **4.14% or more** iv. Go to Step 5.
P0732	i. Start the engine. ii. Warm up the engine and ATX. iii. Drive the vehicle under the following conditions 3 times or more. • Turbine speed (TSS PID): **225—4,987 rpm** • Selector lever position: D or M range, 2GR iv. Go to Step 5.
P0733	i. Start the engine. ii. Warm up the engine and ATX. iii. Drive the vehicle under the following conditions. • Turbine speed (TSS PID): **225—4,987 rpm** • Selector lever position: D or M range, 3GR iv. Go to Step 5.

DTC No.	inspection
J734	i. Start the engine. ii. Warm up the engine and ATX. iii. Drive the vehicle under the following conditions. • Vehicle speed (VSS PID): **28 km/h {17 mph} or more** • Turbine speed (TSS PID): **225—4,987 rpm** • Selector lever position: D or M range, 4GR iv. Go to Step 5.
P0735	i. Start the engine. ii. Warm up the engine and ATX. iii. Drive the vehicle under the following conditions. • Turbine speed (TSS PID): **225—4,987 rpm** • Throttle opening angle (THOP PID): **4.14% or more** • Selector lever position: D or M range, from 1GR to 5GR iv. Go to Step 5.
P0741	i. Start the engine. ii. Warm up the engine and ATX. iii. Drive the vehicle under the following conditions for **5 s or more.** • Vehicle speed (VSS PID): **60—100 km/h {38—62 mph}** • Turbine speed (TSS PID): **225—4,987 rpm** • Selector lever position: D range, 4GR iv. Go to Step 5.
P0742	i. Start the engine. ii. Warm up the engine and ATX. iii. Drive the vehicle under the following conditions. • Vehicle speed (VSS PID): **70 km/h {43 mph} or less** • Turbine speed (TSS PID): **225—4,987 rpm** • Selector lever position: D range, 4GR • Throttle conditions — Throttle opening angle (THOP PID) is **6.25% or more** and **5 s or more** have passed. — Throttle opening angle (THOP PID) is **within 3.13—6.25%** and **3 s or more** have passed. — Throttle opening angle is at closed throttle position and **5 s or more** have passed. iv. Go to Step 5.
P0744, P0753, P0758, P0763, P0768, P0773, P0778, P0841, P1783, P2709	i. Start the engine. ii. Warm up the engine and ATX. iii. Drive the vehicle in D range and make sure that the gears shift smoothly from 1GR to 5GR and TCC is operated. iv. Turn the ignition switch to the LOCK position. v. Start the engine. vi. Drive the vehicle in D range and make sure that the gears shift smoothly from 1GR to 5GR and TCC is operated. vii. Go to Step 5.
P0745	i. Start the engine. ii. Warm up the engine and ATX. iii. Drive the vehicle in D range. iv. Go to Step 5.
P0751	i. Start the engine. ii. Warm up the engine and ATX. iii. Drive the vehicle under the following conditions for **15 s or more.** • Vehicle speed (VSS PID): **36 km/h {22 mph} or more** • Turbine speed (TSS PID): **225—4,987 rpm** • Selector lever position: D range, 4GR iv. Turn the ignition switch to the LOCK position. v. Start the engine. vi. Drive the vehicle under the following conditions for **15 s or more.** • Vehicle speed (VSS PID): **36 km/h {22 mph} or more** • Turbine speed (TSS PID): **225—4,987 rpm** • Selector lever position: D range, 4GR vii. Go to Step 5.
J752	i. Start the engine. ii. Warm up the engine and ATX. iii. Selector lever position: D range iv. Depress the brake pedal. v. Turn the ignition switch to the LOCK position. vi. Start the engine. vii. Selector lever position: D range viii. Depress the brake pedal. ix. Go to Step 5.

DTC No.	inspection
P0756	i. Start the engine. ii. Warm up the engine and ATX. iii. Drive the vehicle under the following conditions 4 times or more. • Turbine speed (TSS PID): **225—4,987 rpm** • Throttle opening angle (THOP PID): **4.14% or more** • Differential gear case (output) revolution speed (OSS PID): **35 rpm or more** • Selector lever position: D range, 1GR iv. Turn the ignition switch to the LOCK position. v. Start the engine. vi. Drive the vehicle under the following conditions 4 times or more. • Turbine speed (TSS PID): **225—4,987 rpm** • Throttle opening angle (THOP PID): **4.14% or more** • Differential gear case (output) revolution speed (OSS PID): **35 rpm or more** • Selector lever position: D range, 1GR vii. Go to Step 5.
P0757, P0766	i. Start the engine. ii. Warm up the engine and ATX. iii. Drive the vehicle under the following conditions. • Vehicle speed (VSS PID): **28 km/h {17 mph} or more** • Turbine speed (TSS PID): **225—4,987 rpm** • Throttle opening angle at closed throttle position • Differential gear case (output) revolution speed (OSS PID): **35 rpm or more** • Selector lever position: D range, 2GR and 4GR iv. Turn the ignition switch to the LOCK position. v. Start the engine. vi. Drive the vehicle under the following conditions. • Vehicle speed (VSS PID): **28 km/h {17 mph} or more** • Turbine speed (TSS PID): **225—4,987 rpm** • Throttle opening angle at closed throttle position • Differential gear case (output) revolution speed (OSS PID): **35 rpm or more** • Selector lever position: D range, 2GR and 4GR vii. Go to Step 5.
P0761	i. Start the engine. ii. Warm up the engine and ATX. iii. Drive the vehicle under the following conditions 4 times or more. • Turbine speed (TSS PID): **225—4,987 rpm** • Throttle opening angle (THOP PID): **4.14% or more** • Differential gear case (output) revolution speed (OSS PID): **35 rpm or more** • Selector lever position: D range, 1GR and 2GR iv. Turn the ignition switch to the LOCK position. v. Start the engine. vi. Drive the vehicle under the following conditions 4 times or more. • Turbine speed (TSS PID): **225—4,987 rpm** • Throttle opening angle (THOP PID): **4.14% or more** • Differential gear case (output) revolution speed (OSS PID): **35 rpm or more** • Selector lever position: D range, 1GR and 2GR vii. Go to Step 5.
P0762	i. Start the engine. ii. Warm up the engine and ATX. iii. Drive the vehicle under the following conditions. • Vehicle speed (VSS PID): **26 km/h {16 mph} or more** • Turbine speed (TSS PID): **225—4,987 rpm** • Differential gear case (output) revolution speed (OSS PID): **35 rpm or more** • Selector lever position: D range, 3GR iv. Turn the ignition switch to the LOCK position. v. Start the engine. vi. Drive the vehicle under the following conditions. • Vehicle speed (VSS PID): **26 km/h {16 mph} or more** • Turbine speed (TSS PID): **225—4,987 rpm** • Differential gear case (output) revolution speed (OSS PID): **35 rpm or more** • Selector lever position: D range, 3GR vii. Go to Step 5.

DTC No.	inspection
P0767	i. Start the engine. ii. Warm up the engine and ATX. iii. Drive the vehicle under the following conditions for **5 s or more.** • Turbine speed (TSS PID): **225—4,987 rpm** • Selector lever position: D range, 3GR iv. Turn the ignition switch to the LOCK position. v. Start the engine. vi. Drive the vehicle under the following conditions for **5 s or more**. • Turbine speed (TSS PID): **225—4,987 rpm** • Selector lever position: D range, 3GR vii. Go to Step 5.
P0771	i. Start the engine. ii. Warm up the engine and ATX. iii. Drive the vehicle under the following conditions for **5 s or more**. • Vehicle speed (VSS PID): **60—100 km/h {38—62 mph}** • Turbine speed (TSS PID): **225—4,987 rpm** • Selector lever position: D range, 4GR iv. Turn the ignition switch to the LOCK position. v. Start the engine. vi. Drive the vehicle under the following conditions for **5 s or more**. • Vehicle speed (VSS PID): **60—100 km/h {38—62 mph}** • Turbine speed (TSS PID): **225—4,987 rpm** • Selector lever position: D range, 4GR vii. Go to Step 5.
P0772	i. Start the engine. ii. Warm up the engine and ATX. iii. Drive the vehicle under the following conditions. • Vehicle speed (VSS PID): **70 km/h {43 mph} or less** • Turbine speed (TSS PID): **225—4,987 rpm** • Selector lever position: D range, 4GR • Throttle conditions — Throttle opening angle (THOP PID) is **6.25% or more** and **5 s or more** have passed. — Throttle opening angle (THOP PID) is **within 3.13—6.25%** and **3 s or more** have passed. — Throttle opening angle is at closed throttle position and **5 s or more** have passed. iv. Turn the ignition switch to the LOCK position. v. Start the engine. vi. Drive the vehicle under the following conditions. • Vehicle speed (VSS PID): **70 km/h {43 mph} or less** • Turbine speed (TSS PID): **225—4,987 rpm** • Selector lever position: D range, 4GR • Throttle conditions — Throttle opening angle (THOP PID) is **6.25% or more** and **5 s or more** have passed. — Throttle opening angle (THOP PID) is **within 3.13—6.25%** and **3 s or more** have passed. — Throttle opening angle is at closed throttle position and **5 s or more** have passed. vii. Go to Step 5.
P0777	i. Start the engine. ii. Warm up the engine and ATX. iii. Drive the vehicle under the following conditions 4 times or more. • Turbine speed (TSS PID): **225—4,987 rpm** • Throttle opening angle (THOP PID): **4.14% or more** • Selector lever position: D range, 5GR iv. Turn the ignition switch to the LOCK position. v. Start the engine. vi. Drive the vehicle under the following conditions 4 times or more. • Turbine speed (TSS PID): **225—4,987 rpm** • Throttle opening angle (THOP PID): **4.14% or more** • Selector lever position: D range, 5GR vii. Go to Step 5.
P0791	i. Start the engine. ii. Warm up the engine and ATX. iii. Drive the vehicle in D range at **40 km/h {25 mph} or more** for **4.5 s or more.** iv. Go to Step 5.

DTC No.	inspection
P2707	i. Start the engine. ii. Warm up the engine and ATX. iii. Drive the vehicle under the following conditions 4 times or more. • Turbine speed (TSS PID): **225—4,987 rpm** • Throttle opening angle (THOP PID): **4.14% or more** • Selector lever position: D range, 3GR or 4GR iv. Turn the ignition switch to the LOCK position. v. Start the engine. vi. Drive the vehicle under the following conditions 4 times or more. • Turbine speed (TSS PID): **225—4,987 rpm** • Throttle opening angle (THOP PID): **4.14% or more** • Selector lever position: D range, 3GR or 4GR vii. Go to Step 5.
P2708	i. Start the engine. ii. Warm up the engine and ATX. iii. Drive the vehicle under the following conditions 4 times or more. • Turbine speed (TSS PID): **225—4,987 rpm** • Throttle opening angle (THOP PID): **4.14% or more** • Selector lever position: D range, 5GR iv. Turn the ignition switch to the LOCK position. v. Start the engine. vi. Drive the vehicle under the following conditions 4 times or more. • Turbine speed (TSS PID): **225—4,987 rpm** • Throttle opening angle (THOP PID): **4.14% or more** • Selector lever position: D range, 5GR vii. Go to Step 5.
P0894	i. Start the engine. ii. Warm up the engine and ATX. iii. Depress the brake pedal. iv. Throttle opening angle at closed throttle position. v. Shift the selector lever from the N position to the D range and hold for **3 s or more**. vi. Go to Step 6.

5. Gradually slow down and stop the vehicle.
6. Make sure that the repaired DTC does not recur.

DTC TABLE [FS5A-EL]

E6U050200000W61

DTC No.	Condition	MIL	AT warning light illuminates	DC	Monitor item	Memory function	Page
P0706	Transaxle range (TR) switch circuit range/ performance	ON	YES	2	CCM	X	(See 05–02A–11 DTC P0706 [FS5A-EL].)
P0707	Transaxle range (TR) switch circuit low input	ON	YES	1	CCM	X	(See 05–02A–12 DTC P0707 [FS5A-EL].)
P0708	Transaxle range (TR) switch circuit high input	ON	YES	2	CCM	X	(See 05–02A–14 DTC P0708 [FS5A-EL].)
P0711	Transaxle fluid temperature (TFT) sensor circuit range/performance (stuck)	ON	NO	2	CCM	X	(See 05–02A–16 DTC P0711 [FS5A-EL].)
P0712	Transaxle fluid temperature (TFT) sensor circuit malfunction (short to ground)	ON	YES	1	CCM	X	(See 05–02A–17 DTC P0712 [FS5A-EL].)
P0713	Transaxle fluid temperature (TFT) sensor circuit malfunction (open circuit)	ON	YES	1	CCM	X	(See 05–02A–19 DTC P0713 [FS5A-EL].)
P0715	Input/turbine speed sensor circuit malfunction	ON	YES	1	CCM	X	(See 05–02A–21 DTC P0715 [FS5A-EL].)
P0720	Vehicle speed sensor (VSS) circuit malfunction	ON	YES	1	CCM	X	(See 05–02A–23 DTC P0720 [FS5A-EL].)

DTC No.	Condition	MIL	AT warning light illuminates	DC	Monitor item	Memory function	Page
P0731	Gear 1 incorrect (incorrect gear ratio detected)	OFF	YES	1	CCM	X	(See 05–02A–25 DTC P0731 [FS5A-EL].)
P0732	Gear 2 incorrect (incorrect gear ratio detected)	OFF	YES	1	CCM	X	(See 05–02A–27 DTC P0732 [FS5A-EL].)
P0733	Gear 3 incorrect (incorrect gear ratio detected)	OFF	YES	1	CCM	X	(See 05–02A–29 DTC P0733 [FS5A-EL].)
P0734	Gear 4 incorrect (incorrect gear ratio detected)	OFF	YES	1	CCM	X	(See 05–02A–31 DTC P0734 [FS5A-EL].)
P0735	Gear 5 incorrect (incorrect gear ratio detected)	OFF	YES	1	CCM	X	(See 05–02A–31 DTC P0734 [FS5A-EL].)
P0741	Torque converter clutch (TCC) (stuck off)	OFF	YES	1	CCM	X	(See 05–02A–35 DTC P0741 [FS5A-EL].)
P0742	Torque converter clutch (TCC) (stuck on)	OFF	YES	1	CCM	X	(See 05–02A–37 DTC P0742 [FS5A-EL].)
P0744	Slip control malfunction	OFF	YES	2	CCM	X	(See 05–02A–39 DTC P0744 [FS5A-EL].)
P0745	Pressure control solenoid A malfunction	OFF	YES	1	CCM	X	(See 05–02A–40 DTC P0745 [FS5A-EL].)
P0751	Shift solenoid A stuck off	ON	YES	2	CCM	X	(See 05–02A–42 DTC P0751 [FS5A-EL].)
P0752	Shift solenoid A stuck on	ON	YES	2	CCM	X	(See 05–02A–44 DTC P0752 [FS5A-EL].)
P0753	Shift solenoid A malfunction (electrical)	ON	YES	1	CCM	X	(See 05–02A–46 DTC P0753 [FS5A-EL].)
P0756	Shift solenoid B stuck off	ON	YES	2	CCM	X	(See 05–02A–48 DTC P0756 [FS5A-EL].)
P0757	Shift solenoid B stuck on	ON	YES	2	CCM	X	(See 05–02A–50 DTC P0757 [FS5A-EL].)
P0758	Shift solenoid B malfunction (electrical)	ON	YES	1	CCM	X	(See 05–02A–52 DTC P0758 [FS5A-EL].)
P0761	Shift solenoid C stuck off	ON	YES	2	CCM	X	(See 05–02A–54 DTC P0761 [FS5A-EL].)
P0762	Shift solenoid C stuck on	ON	YES	2	CCM	X	(See 05–02A–56 DTC P0762 [FS5A-EL].)
P0763	Shift solenoid C malfunction (electrical)	ON	YES	1	CCM	X	(See 05–02A–58 DTC P0763 [FS5A-EL].)
P0766	Shift solenoid D stuck off	ON	YES	2	CCM	X	(See 05–02A–60 DTC P0766 [FS5A-EL].)
P0767	Shift solenoid D stuck on	ON	YES	2	CCM	X	(See 05–02A–62 DTC P0767 [FS5A-EL].)

DTC No.	Condition	MIL	AT warning light illuminates	DC	Monitor item	Memory function	Page
P0768	Shift solenoid D malfunction (electrical)	ON	YES	1	CCM	X	(See 05–02A-64 DTC P0768 [FS5A-EL].)
P0771	Shift solenoid E stuck off	ON	YES	2	CCM	X	(See 05–02A–66 DTC P0771 [FS5A-EL].)
P0772	Shift solenoid E stuck on	ON	YES	2	CCM	X	(See 05–02A–68 DTC P0772 [FS5A-EL].)
P0773	Shift solenoid E malfunction (electrical)	ON	YES	1	CCM	X	(See 05–02A–70 DTC P0773 [FS5A-EL].)
P0777	Pressure control solenoid B stuck on	ON	YES	2	CCM	X	(See 05–02A–72 DTC P0777 [FS5A-EL].)
P0778	Pressure control solenoid B malfunction (electrical)	ON	YES	1	CCM	X	(See 05–02A–74 DTC P0778 [FS5A-EL].)
P0791	Intermediate sensor circuit malfunction	ON	YES	1	CCM	X	(See 05–02A–76 DTC P0791 [FS5A-EL].)
P0841	Oil pressure switch circuit malfunction	OFF	NO	2	CCM	X	(See 05–02A–79 DTC P0841 [FS5A-EL].)
P0882	Battery back-up power supply circuit malfunction	ON	NO	1	CCM	X	(See 05–02A–81 DTC P0882 [FS5A-EL].)
P0894	Forward clutch torque transmission	OFF	YES	1	CCM	X	(See 05–02A–83 DTC P0894 [FS5A-EL].)
P1783	ATF high oil temperature malfunction	OFF	YES	1	CCM	X	(See 05–02A–83 DTC P1783 [FS5A-EL].)
P2707	Shift solenoid F stuck off	ON	YES	2	CCM	X	(See 05–02A–85 DTC P2707 [FS5A-EL].)
P2708	Shift solenoid F stuck on	ON	YES	2	CCM	X	(See 05–02A–87 DTC P2708 [FS5A-EL].)
P2709	Shift solenoid F malfunction (electrical)	ON	YES	1	CCM	X	(See 05–02A–89 DTC P2709 [FS5A-EL].)
U0073	CAN system communication error	(See 09–02A–4 DTC TABLE [MULTIPLEX COMMUNICATION SYSTEM (L3, AJ)])					
U0100	Communication error to PCM	(See 09–02A–4 DTC TABLE [MULTIPLEX COMMUNICATION SYSTEM (L3, AJ)])					

DTC P0706 [FS5A-EL]

E6U050200000W62

DTC P0706	Transaxle range (TR) switch range/performance
DETECTION CONDITION	• When all conditions below are satisfied and **100 s or more** have passed. — Engine speed **530 rpm or more** — Vehicle speed **20 km/h {12 mph} or more** — Voltage at TCM terminal 2H **0.5 V or more** — P, R, N, or D range/position not detected **Diagnostic support note:** • This is a continuous monitor (CCM). • The MIL illuminates if the TCM detects the above malfunction condition in two consecutive drive cycles or in one drive cycle while the DTC for the same malfunction has been stored in the TCM. • The PENDING CODE is available if the TCM detects the above malfunction condition during the first drive cycle. • FREEZE FRAME DATA is available. • The AT warning light illuminates. • The DTC is stored in the TCM memory.
POSSIBLE CAUSE	• TR switch malfunction • TR switch misadjustment • TCM malfunction

Diagnostic procedure

STEP	INSPECTION		ACTION
1	**VERIFY FREEZE FRAME DATA HAS BEEN RECORDED** • Has the FREEZE FRAME DATA been recorded?	Yes	Go to the next step.
		No	Record the FREEZE FRAME DATA on the repair order, then go to the next step.
2	**VERIFY RELATED REPAIR INFORMATION AVAILABILITY** • Verify related Service Bulletins and/or on-line repair information availability. • Is any related repair information available?	Yes	Perform repair or diagnosis according to the available repair information. • If the vehicle is not repaired, go to the next step.
		No	Go to the next step.
3	**INSPECT TR SWITCH** • Turn the ignition switch to the LOCK position. • Disconnect the TR switch connector. • Inspect for resistance between TR switch terminals B and C (part-side). • Is the resistance normal? (See 05–17A–12 TRANSAXLE RANGE (TR) SWITCH INSPECTION [FS5A-EL].)	Yes	Adjust the TR switch, then go to the next step. (See 05–17A–17 TRANSAXLE RANGE (TR) SWITCH ADJUSTMENT [FS5A-EL].)
		No	Replace the TR switch, then go to the next step. (See 05–17A–14 TRANSAXLE RANGE (TR) SWITCH REMOVAL/INSTALLATION [FS5A-EL].)
4	**VERIFY TROUBLESHOOTING OF DTC P0706 COMPLETED** • Make sure to reconnect all the disconnected connectors. • Clear the DTC from the memory using the WDS or equivalent. • Drive the vehicle in each range (D and R) for **100 s or more** under the following conditions: — Engine speed (RPM PID): **530 rpm or more** — Vehicle speed (VSS PID): **20 km/h {12 mph} or more** • Is the PENDING CODE present?	Yes	Replace the TCM, then go to the next step. (See 05–17A–38 TCM REMOVAL/INSTALLATION [FS5A-EL].)
		No	No concern is detected. Go to the next step.
5	**VERIFY AFTER REPAIR PROCEDURE** • Perform the "After Repair Procedure". (See 05–02A–4 AFTER REPAIR PROCEDURE [FS5A-EL].) • Are any DTCs present?	Yes	Go to the applicable DTC inspection.
		No	DTC troubleshooting completed.

DTC P0707 [FS5A-EL]

E6U050200000W63

DTC P0707	Transaxle range (TR) switch circuit low input
DETECTION CONDITION	• When all conditions below are satisfied and **100 s or more** have passed. — Vehicle speed **20 km/h {12 mph} or more** — Engine speed **530 rpm or more** — Voltage at TCM terminal 2H **0.5 V or less** **Diagnostic support note:** • This is a continuous monitor (CCM). • The MIL illuminates if the TCM detects the above malfunction condition during the first drive cycle. • The PENDING CODE is available if the TCM detects the above malfunction condition during the first drive cycle. • FREEZE FRAME DATA is available. • The AT warning light illuminates. • The DTC is stored in the TCM memory.
POSSIBLE CAUSE	• TR switch malfunction • Short to ground in wiring harness between TR switch terminal C and TCM terminal 2H • TR switch signal and TR switch ground circuits shorted each other • TCM malfunction

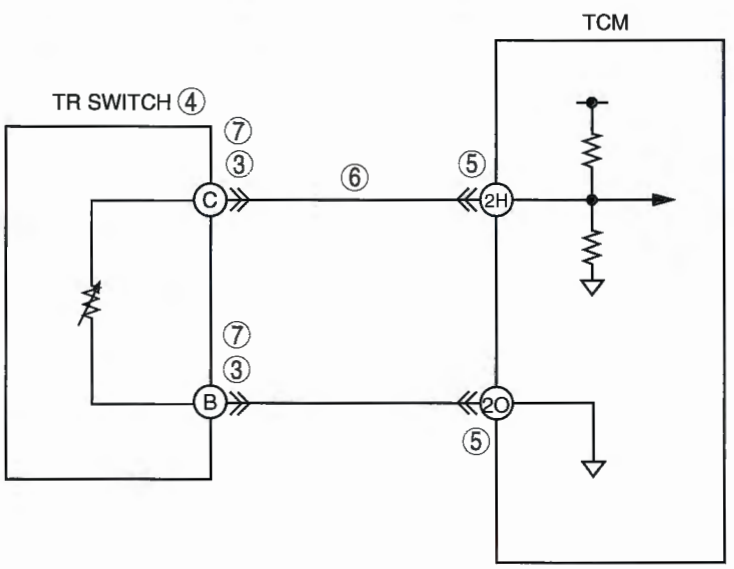

TR SWITCH WIRING HARNESS-SIDE CONNECTOR

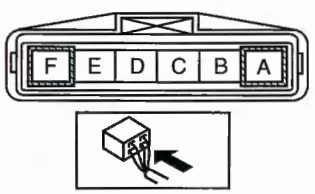

TCM WIRING HARNESS-SIDE CONNECTOR

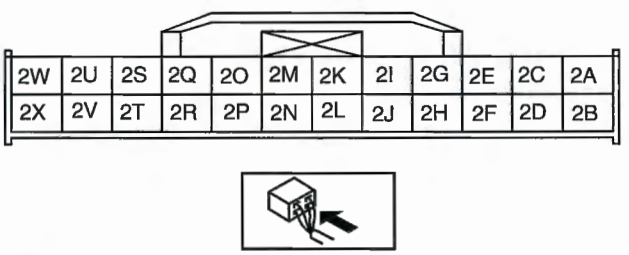

Diagnostic procedure

STEP	INSPECTION		ACTION
1	**VERIFY FREEZE FRAME DATA HAS BEEN RECORDED** • Has the FREEZE FRAME DATA been recorded?	Yes	Go to the next step.
		No	Record the FREEZE FRAME DATA on the repair order, then go to the next step.
2	**VERIFY RELATED REPAIR INFORMATION AVAILABILITY** • Verify related Service Bulletins and/or on-line repair information availability. • Is any related repair information available?	Yes	Perform repair or diagnosis according to the available repair information. • If the vehicle is not repaired, go to the next step.
		No	Go to the next step.
3	**INSPECT TR SWITCH CONNECTOR** • Turn the ignition switch to the LOCK position. • Disconnect the TR switch connector. • Inspect for poor connection at TR switch terminals B and C (part-side) (such as damaged/pulled-out pins, corrosion) • Are TR switch terminals normal?	Yes	Go to the next step.
		No	Repair terminals or replace the TR switch, then go to Step 8. (See 05–17A–14 TRANSAXLE RANGE (TR) SWITCH REMOVAL/INSTALLATION [FS5A-EL].)
4	**INSPECT TR SWITCH** • Turn the ignition switch to the LOCK position. • Disconnect the TR switch connector. • Inspect for resistance between TR switch terminals B and C (part-side). • Is the resistance normal? (See 05–17A–12 TRANSAXLE RANGE (TR) SWITCH INSPECTION [FS5A-EL].)	Yes	Go to the next step.
		No	Replace the TR switch, then go to Step 8. (See 05–17A–14 TRANSAXLE RANGE (TR) SWITCH REMOVAL/INSTALLATION [FS5A-EL].)
5	**INSPECT TCM CONNECTOR FOR POOR CONNECTION** • Disconnect the TCM connector. • Inspect for poor connection at terminals 2H and 2O (such as damaged/pulled-out pins, corrosion). • Is there any malfunction?	Yes	Repair or replace the terminal, then go to Step 8.
		No	Go to the next step.
6	**INSPECT TR SWITCH SIGNAL CIRCUIT FOR SHORT TO GROUND** • Inspect for continuity between TR switch terminal C (wiring harness-side) and body ground. • Is there continuity?	Yes	Repair or replace the wiring harness for short to ground, then go to Step 8.
		No	Go to the next step.
7	**INSPECT TR SWITCH CIRCUIT FOR SHORT CIRCUIT** • Inspect for continuity between TR switch terminals B and C (wiring harness-side). • Is there continuity?	Yes	Repair or replace the wiring harness for short circuit, then go to the next step.
		No	Go to the next step.
8	**VERIFY TROUBLESHOOTING OF DTC P0707 COMPLETED** • Make sure to reconnect all the disconnected connectors. • Clear the DTC from the memory using the WDS or equivalent. • Drive the vehicle for **100 s or more** under the following conditions: — Engine speed (RPM PID): **530 rpm or more** — Vehicle speed (VSS PID): **20 km/h {12 mph} or more** • Is the PENDING CODE present?	Yes	Replace the TCM, then go to the next step. (See 05–17A–38 TCM REMOVAL/INSTALLATION [FS5A-EL].)
		No	No concern is detected. Go to the next step.
9	**VERIFY AFTER REPAIR PROCEDURE** • Perform the "After Repair Procedure". (See 05–02A–4 AFTER REPAIR PROCEDURE [FS5A-EL].) • Are any DTCs present?	Yes	Go to the applicable DTC inspection.
		No	DTC troubleshooting completed.

DTC P0708 [FS5A-EL]

E6U050200000W64

DTC P0708	Transaxle range (TR) switch circuit high input
DETECTION CONDITION	• When all conditions below are satisfied and **100 s or more** have passed. — Vehicle speed **20 km/h {12 mph} or more** — Engine speed **530 rpm or more** — Voltage at TCM terminal 2H **4.79 V or more** **Diagnostic support note:** • This is a continuous monitor (CCM). • The MIL illuminates if the TCM detects the above malfunction condition in two consecutive drive cycles or in one drive cycle while the DTC for the same malfunction has been stored in the TCM. • The PENDING CODE is available if the TCM detects the above malfunction condition during the first drive cycle. • FREEZE FRAME DATA is available. • The AT warning light illuminates. • The DTC is stored in the TCM memory.
POSSIBLE CAUSE	• TR switch malfunction • Open circuit in wiring harness between TR switch terminal C and TCM terminal 2H • Short to power supply in wiring harness between TR switch terminal C and TCM terminal 2H • Open circuit in wiring harness between TR switch terminal B and TCM terminal 2O • Poor connection of TR switch or TCM connectors • TCM malfunction

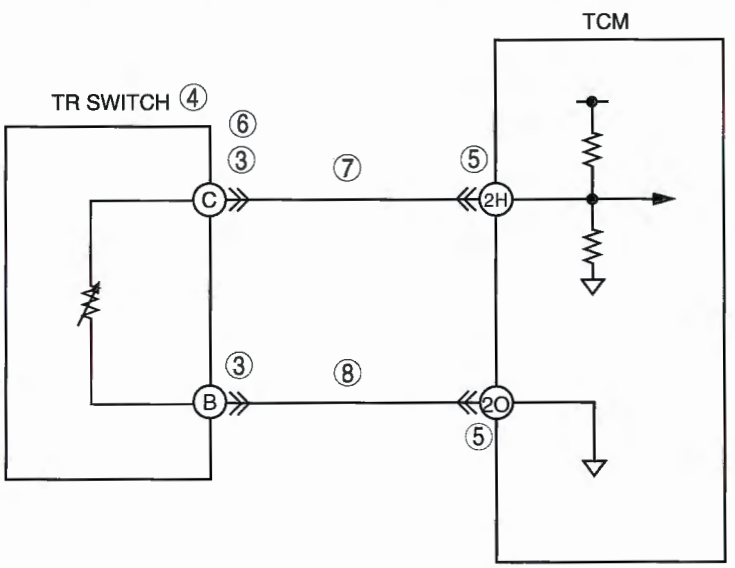

TR SWITCH WIRING HARNESS-SIDE CONNECTOR

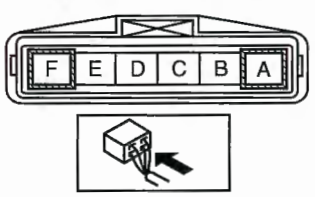

TCM WIRING HARNESS-SIDE CONNECTOR

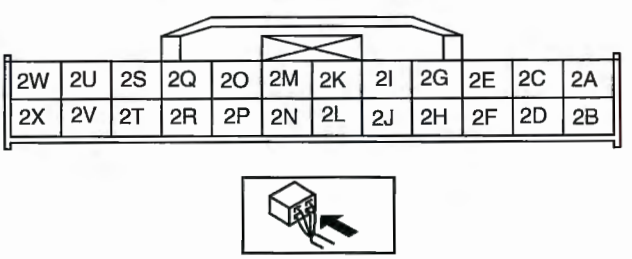

Diagnostic procedure

STEP	INSPECTION		ACTION
1	**VERIFY FREEZE FRAME DATA HAS BEEN RECORDED** • Has the FREEZE FRAME DATA been recorded?	Yes	Go to the next step.
		No	Record the FREEZE FRAME DATA on the repair order, then go to the next step.
2	**VERIFY RELATED REPAIR INFORMATION AVAILABILITY** • Verify related Service Bulletins and/or on-line repair information availability. • Is any related repair information available?	Yes	Perform repair or diagnosis according to the available repair information. • If the vehicle is not repaired, go to the next step.
		No	Go to the next step.
3	**INSPECT TR SWITCH CONNECTOR FOR POOR CONNECTION** • Turn the ignition switch to the LOCK position. • Disconnect the TR switch connector. • Inspect for poor connection (such as damaged/pulled-out pins, corrosion). • Are TR switch terminals normal?	Yes	Go to the next step.
		No	Repair terminals or replace the TR switch, then go to Step 9. (See 05–17A–14 TRANSAXLE RANGE (TR) SWITCH REMOVAL/INSTALLATION [FS5A-EL].)
4	**INSPECT TR SWITCH** • Inspect for resistance between TR switch terminals B and C (part-side). • Is the resistance normal? (See 05–17A–12 TRANSAXLE RANGE (TR) SWITCH INSPECTION [FS5A-EL].)	Yes	Go to the next step.
		No	Replace the TR switch, then go to Step 9. (See 05–17A–14 TRANSAXLE RANGE (TR) SWITCH REMOVAL/INSTALLATION [FS5A-EL].)
5	**INSPECT TCM CONNECTOR FOR POOR CONNECTION** • Disconnect the TCM connector. • Inspect for poor connection at terminals 2H and 2O (such as damaged/pulled-out pins, corrosion). • Is there any malfunction?	Yes	Repair or replace the terminal, then go to step 9.
		No	Go to the next step.
6	**INSPECT TR SWITCH SIGNAL CIRCUIT FOR SHORT TO POWER SUPPLY** • Turn the ignition switch to the ON position (engine off). • Inspect the voltage between TR switch terminal C and (wiring harness-side) body ground. • Is the voltage **B+**?	Yes	Repair or replace the wiring harness for short to power supply, then go to Step 9.
		No	Go to the next step.
7	**INSPECT TR SWITCH SIGNAL CIRCUIT FOR OPEN CIRCUIT** • Inspect for continuity between TR switch terminal C (wiring harness-side) and TCM terminal 2H. • Is there continuity?	Yes	Go to the next step.
		No	Repair or replace the wiring harness for open circuit, then go to step 9.
8	**INSPECT TR SWITCH GROUND CIRCUIT FOR OPEN CIRCUIT** • Inspect for continuity between TR switch terminal B (wiring harness-side) and TCM terminal 2O. • Is there continuity?	Yes	Go to the next step.
		No	Repair or replace the wiring harness for open circuit, then go to the next step.
9	**VERIFY TROUBLESHOOTING OF DTC P0708 COMPLETED** • Make sure to reconnect all the disconnected connectors. • Clear the DTC from the memory using the WDS or equivalent. • Drive the vehicle for **100 s or more** under the following conditions: — Engine speed (RPM PID) **530 rpm or more** — Vehicle speed (VSS PID) **20 km/h {12 mph} or more** • Is the PENDING CODE present?	Yes	Replace the TCM, then go to the next step. (See 05–17A–38 TCM REMOVAL/INSTALLATION [FS5A-EL].)
		No	No concern is detected. Go to the next step.
0	**VERIFY AFTER REPAIR PROCEDURE** • Perform the "After Repair Procedure". (See 05–02A–4 AFTER REPAIR PROCEDURE [FS5A-EL].) • Are any DTCs present?	Yes	Go to the applicable DTC inspection.
		No	DTC troubleshooting completed.

DTC P0711 [FS5A-EL]

E6U050200000W65

DTC P0711	Transaxle fluid temperature (TFT) sensor circuit range/performance (stuck)
DETECTION CONDITION	• When all conditions below are satisfied. — When **180 s** have passed after the engine is started, vehicle is driven for **90 s or more** at vehicle spee **between 25—59 km/h {15—36 mph}**, then **60 km/h {37 mph} or more** for **60 s or more.** — P0712, P0713 not output — Variation in ATF voltage **0.03 V or less** **Diagnostic support note:** • This is a continuous monitor (CCM). • The MIL illuminates if the TCM detects the above malfunction condition in two consecutive drive cycles or in one drive cycle while the DTC for the same malfunction has been stored in the TCM. • The PENDING CODE is available if the TCM detects the above malfunction condition during the first drive cycle. • FREEZE FRAME DATA is available. • The AT warning light does not illuminates. • The DTC is stored in the TCM memory.
POSSIBLE CAUSE	• TFT sensor malfunction • Connector corrosion • TCM malfunction

Diagnostic procedure

STEP	INSPECTION		ACTION
1	**VERIFY FREEZE FRAME DATA HAS BEEN RECORDED** • Has the FREEZE FRAME DATA been recorded?	Yes	Go to the next step.
		No	Record the FREEZE FRAME DATA on the repair order, then go to the next step.
2	**VERIFY RELATED REPAIR INFORMATION AVAILABILITY** • Verify related Service Bulletins and/or on-line repair information availability. • Is any related repair information available?	Yes	Perform repair or diagnosis according to the available repair information. • If the vehicle is not repaired, go to the next step.
		No	Go to the next step.
3	**INSPECT TFT SENSOR VOLTAGE** • Turn the ignition switch to the ON position (engine off). • Measure the voltage at TCM terminal 2M. • Record terminal 2M voltage. • Start the engine. • Drive the vehicle at **60 km/h {37 mph} or more** for **330 s or more.** • Record terminal 2M voltage again. • Is the variation in voltage **0.03 V or more**?	Yes	Go to Step 5.
		No	Go to the next step.
4	**INSPECT TERMINAL CONDITION** • Turn the ignition switch to the LOCK position. • Disconnect the transaxle connector (primary). • Inspect terminals for corrosion. • Are terminals normal?	Yes	Go to the next step.
		No	Repair or replace the terminals, then go to the next step.
5	**VERIFY TROUBLESHOOTING OF DTC P0711 COMPLETED** • Make sure to reconnect all the disconnected connectors. • Clear the DTC from the memory using the WDS or equivalent. • Decrease ATF temperature to **20 °C {68 °F} or less.** • Start the engine and wait for **180 s or more.** • Drive the vehicle at a vehicle speed **between 25—59 km/h {15—36 mph}** for **90 s or more.** • Drive the vehicle at a vehicle speed **60 km/h {37 mph} or more** for **60 s or more.** • Is the PENDING CODE present?	Yes	Replace the TCM, then go to the next step. (See 05–17A–38 TCM REMOVAL/INSTALLATION [FS5A-EL].)
		No	Go to the next step.
6	**VERIFY AFTER REPAIR PROCEDURE** • Perform the "After Repair Procedure". (See 05–02A–4 AFTER REPAIR PROCEDURE [FS5A-EL].) • Are any DTCs present?	Yes	Go to the applicable DTC inspection.
		No	DTC troubleshooting completed.

DTC P0712 [FS5A-EL]

E6U050200000W66

DTC P0712	Transaxle fluid temperature (TFT) sensor circuit malfunction (short to ground)
DETECTION CONDITION	• If the TCM detects either of the following conditions for **150 s or more**, the TCM determines that the TFT sensor circuit has a malfunction. — TFT sensor voltage **0.06 V or less** and vehicle speed **20 km/h {12 mph} or more** **Diagnostic support note:** • This is a continuous monitor (CCM). • The MIL illuminates if the TCM detects the above malfunction conditions during the first drive cycle. • The PENDING CODE is available if the TCM detects the above malfunction condition during the first drive cycle. • FREEZE FRAME DATA is available. • The AT warning light illuminates. • The DTC is stored in the TCM memory.
POSSIBLE CAUSE	• TFT sensor malfunction • Short to ground in wiring harness between TFT sensor and transaxle connector (primary) terminal E • Short to ground in wiring harness between TFT sensor and transaxle connector (primary) terminal H • Short to ground in wiring harness between transaxle connector (primary) terminal E and TCM terminal 2M • Damaged connectors between TFT sensor and TCM • TCM malfunction

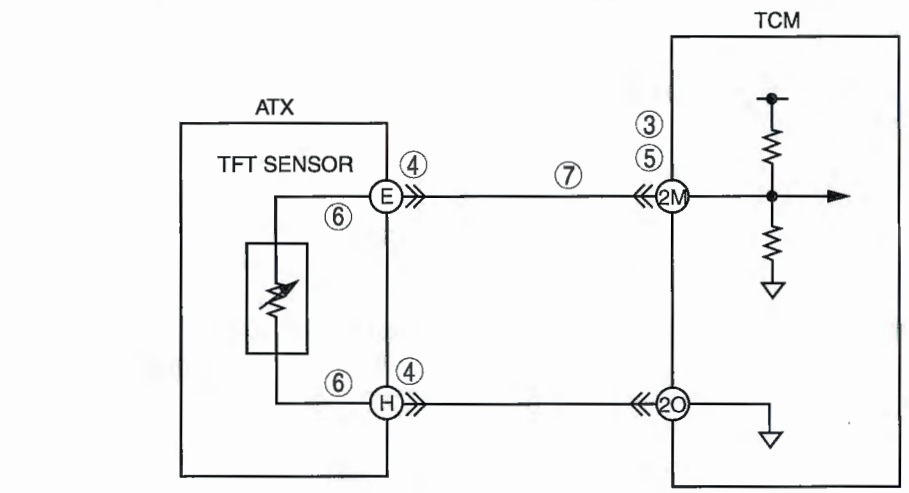

TRANSAXLE CONNECTOR (PRIMARY) WIRING HARNESS-SIDE CONNECTOR

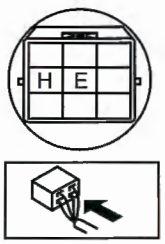

TCM WIRING HARNESS-SIDE CONNECTOR

2W	2U	2S	2Q	2O	2M	2K	2I	2G	2E	2C	2A
2X	2V	2T	2R	2P	2N	2L	2J	2H	2F	2D	2B

Diagnostic procedure

STEP	INSPECTION		ACTION
1	**VERIFY FREEZE FRAME DATA HAS BEEN RECORDED** • Has the FREEZE FRAME DATA been recorded?	Yes	Go to the next step.
		No	Record the FREEZE FRAME DATA on the repair order, then go to the next step.
2	**VERIFY RELATED REPAIR INFORMATION AVAILABILITY** • Verify related Service Bulletins and/or on-line repair information availability. • Is any related repair information available?	Yes	Perform repair or diagnosis according to the available repair information. • If the vehicle is not repaired, go to the next step.
		No	Go to the next step.
3	**VERIFY CURRENT INPUT SIGNAL STATUS** • Turn the ignition switch to the ON position (engine off). • Inspect the voltage at TCM terminal 2M. • Is the voltage **0.06 V or more**?	Yes	Go to the intermittent concern troubleshooting procedure. (See 01–03A–7 INTERMITTENT CONCERN TROUBLESHOOTING [L3].)
		No	Go to the next step.
4	**INSPECT TERMINAL CONDITION** • Turn the ignition switch to the LOCK position. • Disconnect the transaxle connector (primary). • Inspect for poor connection (such as damaged/ pulled-out pins, corrosion). • Are the terminals bent?	Yes	Repair or replace the terminals, then go to Step 8. • If the terminals cannot be repaired, replace the wiring harness, then go to Step 8.
		No	Go to the next step.
5	**INSPECT TFT SENSOR CIRCUIT** • Turn the ignition switch to the ON position (engine off). • Verify that the voltage changes to **4.67 V or more** at TCM terminal 2M when transaxle connector (primary) is disconnected. • Does the voltage change?	Yes	Go to the next step.
		No	Go to Step 8.
6	**INSPECT TFT SENSOR CIRCUIT FOR SHORT TO GROUND** • Inspect for continuity between transaxle connector (primary) terminals (transaxle case side) and body ground. — E and body ground — H and body ground • Is there continuity?	Yes	Repair or replace the wiring harness, then go to Step 8.
		No	Replace the TFT sensor, then go to Step 8. (See 05–17A–20 TRANSAXLE FLUID TEMPERATURE (TFT) SENSOR REMOVAL/INSTALLATION [FS5A-EL].)
7	**INSPECT TRANSAXLE CONNECTOR CIRCUIT FOR SHORT TO GROUND** • Turn the ignition switch to the LOCK position. • Inspect for continuity between transaxle connector (primary) terminal E (wiring harness-side) and body ground. • Is there continuity?	Yes	Repair or replace the wiring harness, then go to the next step.
		No	Go to the next step.
8	**VERIFY TROUBLESHOOTING OF DTC P0712 COMPLETED** • Make sure to reconnect all the disconnected connectors. • Clear the DTC from the memory using the WDS or equivalent. • Drive the vehicle under the following condition for **150 s or more.** — Vehicle speed (VSS PID) **20 km/h {12 mph} or more.** • Is the same DTC present?	Yes	Replace the TCM, then go to the next step. (See 05–17A–38 TCM REMOVAL/INSTALLATION [FS5A-EL].)
		No	Go to the next step.
9	**VERIFY AFTER REPAIR PROCEDURE** • Perform the "After Repair Procedure". (See 05–02A–4 AFTER REPAIR PROCEDURE [FS5A-EL].) • Are any DTCs present?	Yes	Go to the applicable DTC inspection.
		No	DTC troubleshooting completed.

DTC P0713 [FS5A-EL]

E6U050200000W67

DTC P0713	Transaxle fluid temperature (TFT) sensor circuit malfunction (open circuit)
DETECTION CONDITION	• If the TCM detects the following condition for **150 s or more**, the TCM determines that the TFT sensor circuit has a malfunction. — TFT sensor voltage **4.67 V or more** and vehicle speed **20 km/h {12 mph} or more** **Diagnostic support note:** • This is a continuous monitor (CCM). • The MIL illuminates if the TCM detects the above malfunction conditions during the first drive cycle. • The PENDING CODE is available if the TCM detects the above malfunction condition during the first drive cycle. • FREEZE FRAME DATA is available. • The AT warning light illuminates. • The DTC is stored in the TCM memory.
POSSIBLE CAUSE	• TFT sensor malfunction • Open circuit in wiring harness between TFT sensor and transaxle connector (primary) terminal E • Open circuit in wiring harness between TFT sensor and transaxle connector (primary) terminal H • Open circuit in wiring harness between transaxle connector (primary) terminal E and TCM terminal 2M • Open circuit in wiring harness between transaxle connector (primary) terminal H and TCM terminal 2O • Damaged connectors between TFT sensor and TCM • TCM malfunction

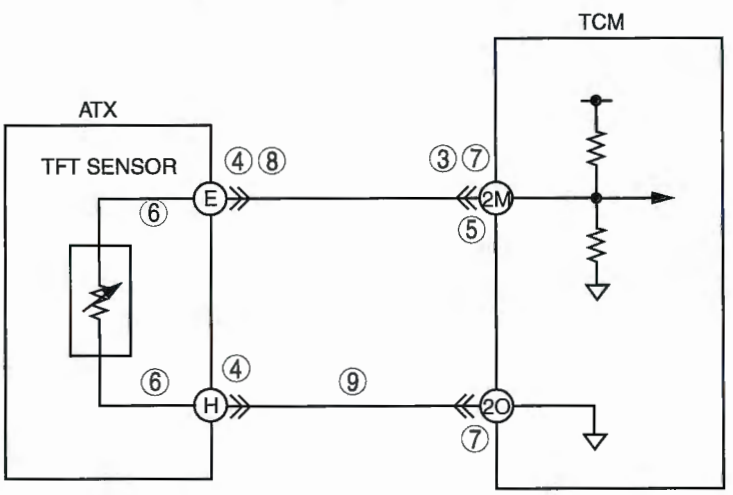

TRANSAXLE CONNECTOR (PRIMARY) WIRING HARNESS-SIDE CONNECTOR

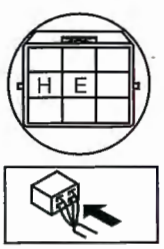

TCM WIRING HARNESS-SIDE CONNECTOR

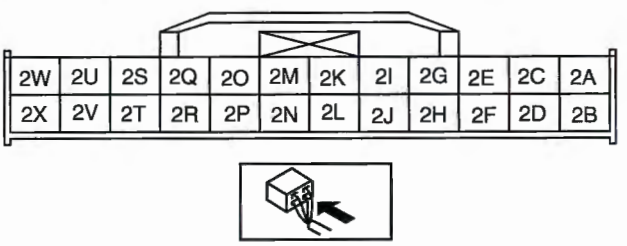

Diagnostic procedure

STEP	INSPECTION		ACTION
1	**VERIFY FREEZE FRAME DATA HAS BEEN RECORDED** • Has the FREEZE FRAME DATA been recorded?	Yes	Go to the next step.
		No	Record the FREEZE FRAME DATA on the repair order, then go to the next step.
2	**VERIFY RELATED REPAIR INFORMATION AVAILABILITY** • Verify related Service Bulletins and/or on-line repair information availability. • Is any related repair information available?	Yes	Perform repair or diagnosis according to the available repair information. • If the vehicle is not repaired, go to the next step.
		No	Go to the next step.
3	**VERIFY CURRENT INPUT SIGNAL STATUS** • Turn the ignition switch to the ON position (engine off). • Measure the voltage at TCM terminal 2M. • Is the voltage **4.67 V or less**?	Yes	Go to the intermittent concern troubleshooting procedure. (See 01–03A–7 INTERMITTENT CONCERN TROUBLESHOOTING [L3].)
		No	Go to the next step.

STEP	INSPECTION		ACTION
4	**INSPECT TRANSAXLE CONNECTOR FOR POOR CONNECTION** • Turn the ignition switch to the LOCK position. • Inspect transaxle connector (primary) connection. • Disconnect the transaxle connector (primary). • Inspect for poor connection (such as damaged/ pulled-out pins, corrosion). • Is the connection normal?	Yes	Go to the next step.
		No	Repair or replace the connector and/or terminals, then go to Step 10.
5	**INSPECT TFT SENSOR CIRCUIT** • Turn the ignition switch to the ON position (engine off). • Measure the voltage at TCM terminal 2M when connect between transaxle connector (primary) terminals E and H (wiring harness-side) using jumper wire. • Verify that voltage changes to **0.06 V or less.** • Does the voltage change?	Yes	Go to the next step.
		No	Go to Step 7.
6	**INSPECT TFT SENSOR CIRCUIT FOR OPEN CIRCUIT** • Inspect for continuity between transaxle connector (primary) terminals (transaxle case side) E and H. • Is there continuity?	Yes	Replace the TFT sensor, then go to Step 10. (See 05–17A–20 TRANSAXLE FLUID TEMPERATURE (TFT) SENSOR REMOVAL/INSTALLATION [FS5A-EL].)
		No	Repair or replace the wiring harness, then go to Step 10.
7	**INSPECT TCM CONNECTOR FOR POOR CONNECTION** • Turn the ignition switch to the LOCK position. • Disconnect the TCM connector. • Inspect for poor connection (such as damaged/ pulled-out pins, corrosion). • Is the connection normal?	Yes	Go to the next step.
		No	Repair or replace the connector and/or terminals, then go to Step 10.
8	**INSPECT WIRING HARNESS FOR OPEN CIRCUIT** • Disconnect the transaxle connector (primary). • Connect the TCM connector. • Turn the ignition switch to the ON position (engine off). • Inspect the voltage at transaxle connector (primary) terminal E (vehicle wiring harness-side). • Is the voltage **5 V**?	Yes	Go to the next step.
		No	Repair or replace the wiring harness, then go to Step 10.
9	**INSPECT TRANSAXLE CONNECTOR CIRCUIT FOR OPEN CIRCUIT** • Turn the ignition switch to the LOCK position. • Inspect for continuity between transaxle connector (primary) terminal H (wiring harness-side) and body ground. • Is there continuity?	Yes	Go to the next step.
		No	Repair or replace the wiring harness, then go to the next step.
10	**VERIFY TROUBLESHOOTING OF DTC P0713 COMPLETED** • Make sure to reconnect all the disconnected connectors. • Clear the DTC from the memory using the WDS or equivalent. • Drive the vehicle under the following condition for **150 s or more.** — Vehicle speed (VSS PID) **20 km/h {12 mph} or more.** • Is the same DTC present?	Yes	Replace the TCM, then go to the next step. (See 05–17A–38 TCM REMOVAL/INSTALLATION [FS5A-EL].)
		No	Go to the next step.
11	**VERIFY AFTER REPAIR PROCEDURE** • Perform the "After Repair Procedure". (See 05–02A–4 AFTER REPAIR PROCEDURE [FS5A-EL].) • Are any DTCs present?	Yes	Go to the applicable DTC inspection.
		No	DTC troubleshooting completed.

DTC P0715 [FS5A-EL]

E6U050200000W68

DTC P0715	Input/turbine speed sensor circuit malfunction
DETECTION CONDITION	• When all conditions below are satisfied and **0.7 s or more** have passed. — D range of TR switch input — Driving vehicle at vehicle speed of **41 km/h {25 mph} or more** — Input/turbine speed sensor signal not input **Diagnostic support note:** • This is a continuous monitor (CCM). • The MIL illuminates if the TCM detects the above malfunction conditions during the first drive cycle. • The PENDING CODE is available if the TCM detects the above malfunction condition during the first drive cycle. • FREEZE FRAME DATA is available. • The AT warning light illuminates. • The DTC is stored in the TCM memory.
POSSIBLE CAUSE	• Input/turbine speed sensor malfunction • Short to ground in wiring harness between input/turbine speed sensor terminal A and TCM terminal 2K • Short to ground in wiring harness between input/turbine speed sensor terminal B and TCM terminal 2I • Open circuit in wiring harness between input/turbine speed sensor terminal A and TCM terminal 2K • Open circuit in wiring harness between input/turbine speed sensor terminal B and TCM terminal 2I • Damaged connectors between input/turbine speed sensor and TCM • TCM malfunction

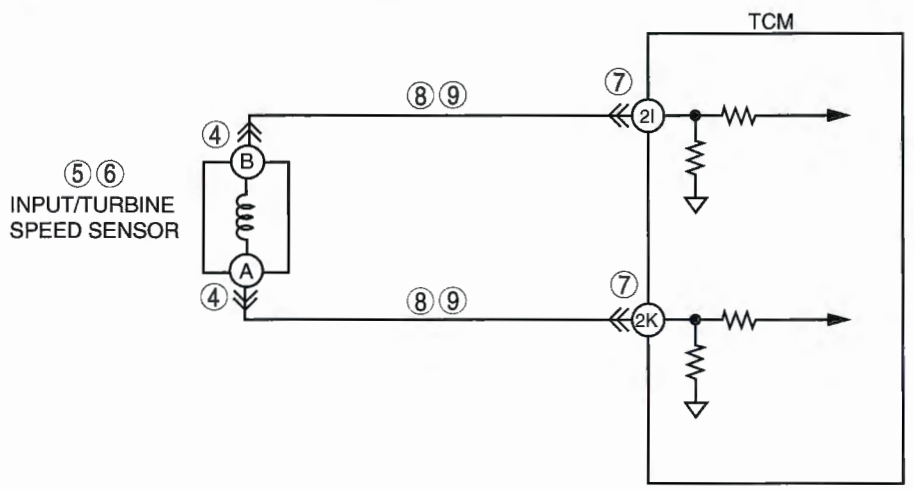

INPUT/TURBINE SPEED SENSOR WIRING HARNESS-SIDE CONNECTOR

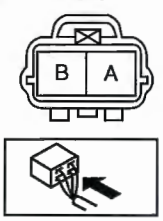

TCM WIRING HARNESS-SIDE CONNECTOR

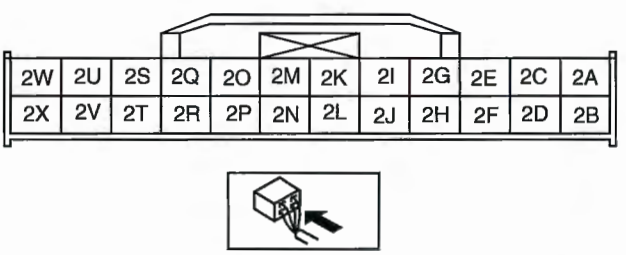

Diagnostic procedure

STEP	INSPECTION		ACTION
1	**VERIFY FREEZE FRAME DATA HAS BEEN RECORDED** • Has the FREEZE FRAME DATA been recorded?	Yes	Go to the next step.
		No	Record the FREEZE FRAME DATA on the repair order, then go to the next step.
2	**VERIFY RELATED REPAIR INFORMATION AVAILABILITY** • Verify related Service Bulletins and/or on-line repair information availability. • Is any related repair information available?	Yes	Perform repair or diagnosis according to the available repair information. • If the vehicle is not repaired, go to the next step.
		No	Go to the next step.

STEP	INSPECTION		ACTION
3	**VERIFY CURRENT INPUT SIGNAL STATUS** • Turn the ignition switch to the LOCK position. • Start the engine. • Measure the frequency of input/turbine speed sensor using a oscilloscope. — IG ON: **0 Hz** — Idle: **Within 320—374 Hz** (P, N position) • Are frequencies of input/turbine speed sensor within specifications?	Yes	Go to the intermittent concern troubleshooting procedure. (See 01–03A–7 INTERMITTENT CONCERN TROUBLESHOOTING [L3].)
		No	Go to the next step.
4	**INSPECT INPUT/TURBINE SPEED SENSOR CONNECTOR FOR POOR CONNECTION** • Turn the ignition switch to the LOCK position. • Disconnect the input/turbine speed sensor connector. • Inspect for poor connection (such as damaged/ pulled-out pins, corrosion). • Is the connection normal?	Yes	Go to the next step.
		No	Repair or replace the connector and/or terminals, then go to Step 10.
5	**INSPECT INPUT/TURBINE SPEED SENSOR RESISTANCE** • Measure the resistance between the input/ turbine speed sensor terminals (part-side). • Is the resistance **within 250—600 ohms** between input/turbine speed sensor terminals (part-side)? (See 05–17A–22 INPUT/TURBINE SPEED SENSOR INSPECTION [FS5A-EL].)	Yes	Go to the next step.
		No	Replace the input/turbine speed sensor, then go to Step 10. (See 05–17A–23 INPUT/TURBINE SPEED SENSOR REMOVAL/INSTALLATION [FS5A-EL].)
6	**INSPECT INPUT/TURBINE SPEED SENSOR** • Remove input/turbine speed sensor. • Is there iron powder stuck on input/turbine speed sensor? (See 05–17A–23 INPUT/TURBINE SPEED SENSOR REMOVAL/INSTALLATION [FS5A-EL].)	Yes	Clean the input/turbine speed sensor, then go to Step 10.
		No	Go to the next step.
7	**INSPECT TCM CONNECTOR FOR POOR CONNECTION** • Disconnect the TCM connector. • Inspect for poor connection (such as damaged/ pulled-out pins, corrosion). • Is the connection normal?	Yes	Go to the next step.
		No	Repair or replace the connector and/or terminals, then go to Step 10.
8	**INSPECT INPUT/TURBINE SPEED SENSOR CIRCUIT FOR OPEN CIRCUIT** • Inspect the following input/turbine speed sensor terminals (wiring harness-side) and TCM terminals (wiring harness-side): — A and 2K — B and 2I • Is there continuity?	Yes	Go to the next step.
		No	Repair or replace the wiring harness, then go to Step 10.
9	**INSPECT INPUT/TURBINE SPEED SENSOR CIRCUIT FOR SHORT TO GROUND** • Inspect input/turbine speed sensor terminal (wiring harness-side) and body ground. — A and body ground — B and body ground • Is there continuity?	Yes	Repair or replace the wiring harness, then go to the next step.
		No	Go to the next step.
10	**VERIFY TROUBLESHOOTING OF DTC P0715 COMPLETED** • Make sure to reconnect all the disconnected connectors. • Clear the DTC from the memory using the WDS or equivalent. • Drive the vehicle a vehicle speed **41 km/h {25 mph} or more** for **0.7 s or more**. • Is the same DTC present?	Yes	Replace the TCM, then go to the next step. (See 05–17A–38 TCM REMOVAL/INSTALLATION [FS5A-EL].)
		No	Go to the next step.
11	**VERIFY AFTER REPAIR PROCEDURE** • Perform the "After Repair Procedure". (See 05–02A–4 AFTER REPAIR PROCEDURE [FS5A-EL].) • Are any DTCs present?	Yes	Go to the applicable DTC inspection.
		No	DTC troubleshooting completed.

DTC P0720 [FS5A-EL]

E6U050200000W69

DTC P0720	Vehicle speed sensor (VSS) circuit malfunction
DETECTION CONDITION	• Vehicle speed signal is not input after the following conditions are met and **4.5 s or more** have passed. — D range switch ON — Engine coolant temperature **60 °C {140 °F} or more** — Turbine speed **1,500 rpm or more** — Secondary gear revolution speed **50 rpm or more** **Diagnostic support note:** • This is a continuous monitor (CCM). • The MIL illuminates if the TCM detects the above malfunction conditions during the first drive cycle. • The PENDING CODE is available if the TCM detects the above malfunction condition during the first drive cycle. • FREEZE FRAME DATA is available. • The AT warning light illuminates. • The DTC is stored in the TCM memory.
POSSIBLE CAUSE	• VSS malfunction • Open circuit in wiring harness between VSS terminal B and TCM terminal 2P • Short to ground in wiring harness between VSS terminal B and TCM terminal 2P • Open circuit in wiring harness between VSS terminal A and main relay terminal C • Short to ground in wiring harness between VSS terminal A and AT main relay terminal A • Open circuit in wiring harness between VSS terminal C and body ground • Damaged connectors between VSS and TCM • TCM malfunction

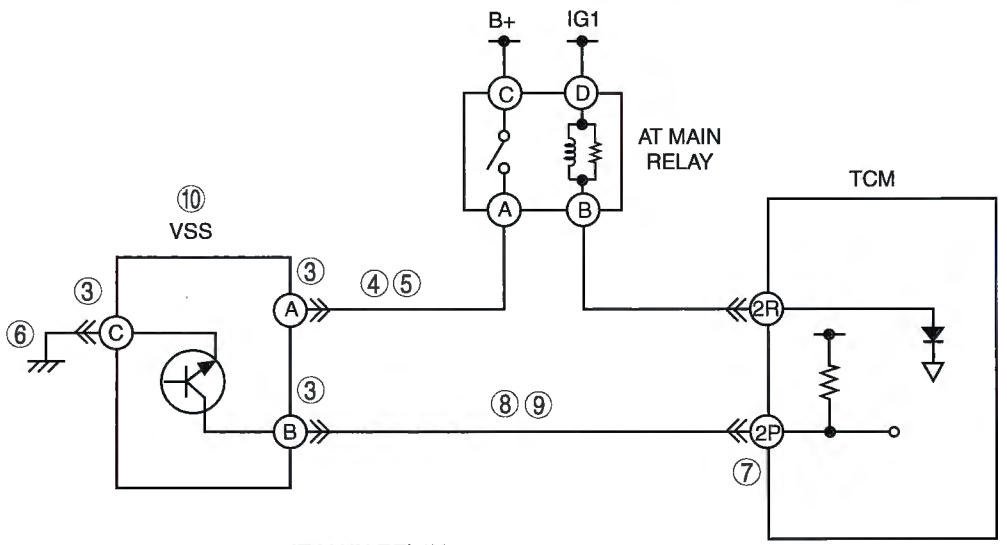

VSS WIRING HARNESS-SIDE CONNECTOR

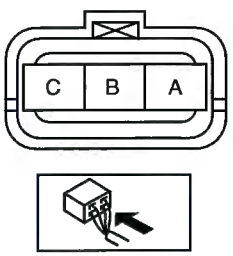

AT MAIN RELAY WIRING HARNESS-SIDE CONNECTOR

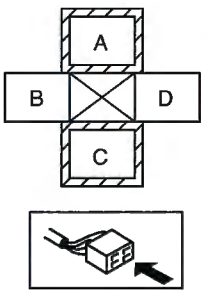

TCM WIRING HARNESS-SIDE CONNECTOR

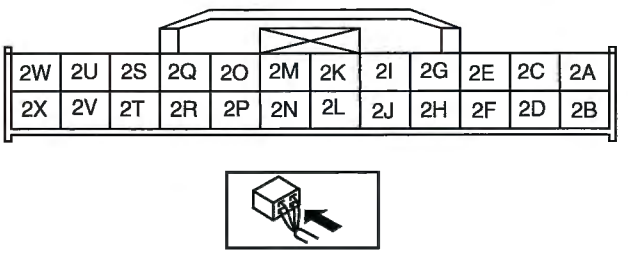

Diagnostic procedure

STEP	INSPECTION		ACTION
1	**VERIFY FREEZE FRAME DATA HAS BEEN RECORDED** • Has the FREEZE FRAME DATA been recorded?	Yes	Go to the next step.
		No	Record the FREEZE FRAME DATA on the repair order, then go to the next step.
2	**VERIFY RELATED SERVICE INFORMATION AVAILABILITY** • Verify related Service Bulletins and/or on-line repair information availability. • Is any related repair Information available?	Yes	Perform repair or diagnosis according to the available repair information. • If the vehicle is not repaired, go to the next step.
		No	Go to the next step.
3	**INSPECT VSS CONNECTOR FOR POOR CONNECTION** • Turn the ignition switch to the LOCK position. • Disconnect the VSS connector. • Inspect for poor connection (such as damaged/ pulled-out pins, corrosion). • Is the connection normal?	Yes	Go to the next step.
		No	Repair or replace the pin or connector, then go to Step 11.
4	**INSPECT VSS POWER CIRCUIT FOR OPEN CIRCUIT** • Verify that the VSS connector is disconnected. • Turn the ignition switch to the ON position (engine off). • Inspect the voltage between VSS terminal A (wiring harness-side) and ground. • Is the voltage **B+**?	Yes	Go to Step 6.
		No	Go to the next step.
5	**INSPECT VSS POWER CIRCUIT FOR SHORT TO GROUND** • Turn the ignition switch to the LOCK position. • Inspect for continuity between VSS terminal A (wiring harness-side) and ground. • Is there continuity?	Yes	Go to the next step.
		No	Repair or replace the wiring harness, then go to Step 11.
6	**INSPECT VSS GROUND CIRCUIT FOR OPEN CIRCUIT** • Verify that the VSS connector is disconnected. • Inspect for continuity between VSS (wiring harness-side) terminal C and ground. • Is there continuity?	Yes	Go to the next step.
		No	Repair or replace the wiring harness, then go to Step 11.
7	**INSPECT TCM CONNECTOR FOR POOR CONNECTION** • Disconnect the TCM connector. • Inspect for poor connection (such as damaged/ pulled-out pins, corrosion). • Is the connection normal?	Yes	Go to the next step.
		No	Repair or replace the pin or connector, then go to Step 11.
8	**INSPECT VEHICLE SPEED SIGNAL CIRCUIT FOR OPEN CIRCUIT** • Disconnect the TCM connector and VSS connector. • Inspect for continuity between VSS terminal B and TCM terminal 2P. • Is there continuity?	Yes	Go to the next step.
		No	Repair or replace the wiring harness, then go to Step 11.
9	**INSPECT VEHICLE SPEED SIGNAL CIRCUIT FOR SHORT TO GROUND** • Verity that the VSS connector and TCM connector are disconnected. • Inspect for continuity between TCM terminal 2P and body ground. • Is there continuity?	Yes	Repair or replace the wiring harness, then go to the next step.
		No	Replace the VSS, then go to the next step. (See 05–17A–27 VEHICLE SPEED SENSOR (VSS) REMOVAL/INSTALLATION [FS5A-EL].)
10	**INSPECT VEHICLE SPEED SENSOR** • Inspect the VSS. (See 05–17A–25 VEHICLE SPEED SENSOR (VSS) INSPECTION [FS5A-EL].) • Is VSS normal?	Yes	Go to the next step.
		No	Repair or replace the VSS, then go to Step 11.

STEP	INSPECTION		ACTION
11	**VERIFY TROUBLESHOOTING OF DTC P0720 COMPLETED** • Make sure to reconnect all the disconnected connectors. • Clear the DTC from the memory using the WDS or equivalent. • Warm up engine. • Drive the vehicle under the following conditions for **4.5 s or more** while monitoring PIDs. — Engine coolant temp (ECT PID): **60 °C {140 °F} or more** — Drive in D or M range — Frequency of input/turbine speed sensor: **800 Hz or more** • Is the PENDING CODE present?	Yes	Replace the TCM, then go to the next step. (See 05–17A–38 TCM REMOVAL/INSTALLATION [FS5A-EL].)
		No	No concern is detected. Go to the next step.
12	**VERIFY AFTER REPAIR PROCEDURE** • Perform the "After Repair Procedure". (See 05–02A–4 AFTER REPAIR PROCEDURE [FS5A-EL].) • Are any DTCs present?	Yes	Go to the applicable DTC inspection.
		No	DTC troubleshooting completed.

DTC P0731 [FS5A-EL]

E6U050200000W70

DTC P0731	Gear 1 incorrect (incorrect gear ratio detected)
DETECTION CONDITION	• The TCM monitors the revolution ratio of the forward clutch drum revolution to secondary gear revolution when the following monitoring conditions are met. If the revolution ratio is **2.157 or less**, the TCM determines that there is a malfunction. **Monitoring conditions:** — Engine running — ATF temperature **20 °C {68 °F} or more** — Driving in 1GR in D or M range — Turbine speed **within 225—4,987 rpm** — Secondary gear revolution speed **50 rpm or more** — Throttle opening angle **4.14% or more** — Differential gear case (output) revolution speed **35 rpm or more**. — None of the following DTCs are present: P0706, P0707, P0708, P0712, P0713, P0715, P0720, P0751, P0752, P0753, P0756, P0757, P0758, P0761, P0762, P0763, P0766, P0767, P0768, P0771, P0772, P0773, P0791 **Diagnostic support note:** • This is a continuous monitor (CCM). • The MIL does not illuminate. • The AT warning light illuminates if the TCM detects the above malfunction condition during the first drive cycle. • FREEZE FRAME DATA is not available. • A PENDING CODE is not available. • The DTC is stored in the TCM memory.
POSSIBLE CAUSE	• ATF level low • Deteriorated ATF • Shift solenoid A stuck • Pressure control solenoid A stuck • Line pressure low • One-way clutch slipping • Forward clutch slipping • Control valve stuck • Oil pump malfunction • TCM malfunction

Diagnostic procedure

STEP	INSPECTION		ACTION
1	**VERIFY RELATED REPAIR INFORMATION AVAILABILITY** • Verify related Service Bulletins and/or on-line repair information availability. • Is any related repair information available?	Yes	Perform repair or diagnosis according to the available repair information.
		No	Go to the next step.
2	**INSPECT ATF CONDITION** • Inspect the ATF condition. (See 05–17A–10 Automatic Transaxle Fluid (ATF) Condition Inspection.) • Is it normal?	Yes	Go to the next step.
		No	Replace the ATF, then go to Step 8.
3	**INSPECT ATF LEVEL** • Start the engine. • Warm up the ATX. • Is the ATF level within the specification? (See 05–17A–11 Automatic Transaxle Fluid (ATF) Level Inspection.)	Yes	Go to the next step.
		No	Add ATF to the specified level, then go to Step 8. (See 05–17A–11 Automatic Transaxle Fluid (ATF) Level Inspection.)
4	**INSPECT SHIFT SOLENOID A** • Perform operation inspection. (See 05–17A–28 SOLENOID VALVE INSPECTION (PRIMARY CONTROL VALVE BODY) [FS5A-EL].) • Verify the click sound of shift solenoid A when applying B+ to transaxle terminal A. • Was a click heard from solenoids?	Yes	Go to the next step.
		No	Replace the solenoid that you could not hear a click sound, then go to Step 8. (See 05–17A–30 SOLENOID VALVE REMOVAL/ INSTALLATION (PRIMARY CONTROL VALVE BODY) [FS5A-EL].)
5	**INSPECT LINE PRESSURE** • Start the engine. • Measure the line pressures. (See 05–17A–5 Line Pressure Test.) • Are the line pressures within the specifications?	Yes	Go to the next step.
		No	All ranges: Replace the oil pump, then go to Step 8. Any ranges: Replace the primary control valve body, then go to Step 8. (See 05–17A–46 PRIMARY CONTROL VALVE BODY REMOVAL [FS5A-EL].) (See 05–17A–47 PRIMARY CONTROL VALVE BODY INSTALLATION [FS5A-EL].)
6	**INSPECT STALL SPEED** • Measure the stall speed in D range. (See 05–17A–6 Stall Test.) • Is the stall speed within the specification?	Yes	Go to the next step.
		No	Replace the automatic transaxle, then go to Step 8. (See 05–17A–39 AUTOMATIC TRANSAXLE REMOVAL/ INSTALLATION [FS5A-EL].)
7	**INSPECT FREQUENCY OF INPUT/TURBINE SPEED SENSOR WHEN DRIVING VEHICLE** • Turn the ignition switch to the LOCK position. • Connect the WDS or equivalent. • Start the engine. • Measure the frequency of input/turbine speed sensor while driving vehicle under the following conditions: — Vehicle speed (VSS PID): **20 km/h {12 mph}** — Drive in the D range, 1GR — Throttle opening angle (THOP PID): **approx. 25%** • Was the frequency of the input/turbine speed sensor at **approx. 1,300 Hz**?	Yes	Go to the next step.
		No	Replace the primary control valve body, then go to the next step. (See 05–17A–46 PRIMARY CONTROL VALVE BODY REMOVAL [FS5A-EL].) (See 05–17A–47 PRIMARY CONTROL VALVE BODY INSTALLATION [FS5A-EL].)

STEP	INSPECTION		ACTION
8	**VERIFY REPAIR OF DTC P0731** • Make sure to reconnect all the disconnected connectors. • Clear the DTC using the WDS or equivalent. • Start the engine. • Warm up the transaxle. • Drive the vehicle under the following conditions at least 4 times for **more than 1 s**: — ATF temperature (TFT PID): **20 °C {68 °F} or more** — Drive in the D range, 1GR — Throttle opening angle (THOP PID): **4.14% or more** — Vehicle speed (VSS PID): **4 km/h {3 mph} or more** • Are any DTCs present?	Yes	Replace the TCM, then go to the next step. (See 05–17A–38 TCM REMOVAL/INSTALLATION [FS5A-EL].)
		No	Go to the next step.
9	**VERIFY AFTER REPAIR PROCEDURE** • Perform the "After Repair Procedure". (See 05–02A–4 AFTER REPAIR PROCEDURE [FS5A-EL].) • Are any DTCs present?	Yes	Go to the applicable DTC inspection.
		No	DTC troubleshooting completed.

05–02A

DTC P0732 [FS5A-EL]

E6U050200000W71

DTC P0732	Gear 2 incorrect (incorrect gear ratio detected)
DETECTION CONDITION	• The TCM monitors revolution ratio of the forward clutch drum revolution to the secondary gear case revolution when the following monitoring conditions are met. If revolution ratio is **1.249 or less** or **2.157 or more**, the TCM determines that there is a malfunction. **Monitoring conditions:** — Engine running — ATF temperature **20 °C {68 °F} or more** — Driving in 2 GR in D or M range — Turbine speed **within 225—4,987 rpm** — Secondary gear revolution speed **50 rpm or more** — Differential gear case (output) revolution speed **35 rpm or more** — None of the following DTCs are present: P0706, P0707, P0708, P0712, P0713, P0715, P0720, P0751, P0752, P0753, P0756, P0757, P0758, P0761, P0762, P0763, P0766, P0767, P0768, P0771, P0772, P0773, P0791 **Diagnostic support note:** • This is a continuous monitor (CCM). • The MIL does not illuminate. • The AT warning light illuminates if the TCM detects the above malfunction condition during the first drive cycle. • FREEZE FRAME DATA is not available. • A PENDING CODE is not available. • The DTC is stored in the TCM memory.
POSSIBLE CAUSE	• ATF level low • Deteriorated ATF • Shift solenoids A, B or C stuck • Pressure control solenoid A stuck • Line pressure low • 2-4 brake band slipping • Forward clutch slipping • Control valve stuck • Oil pump malfunction • TCM malfunction

Diagnostic procedure

STEP	INSPECTION		ACTION
1	**VERIFY RELATED REPAIR INFORMATION AVAILABILITY** • Verify related Service Bulletins and/or on-line repair information availability. • Is any related repair information available?	Yes	Perform repair or diagnosis according to the available repair information.
		No	Go to the next step.

STEP	INSPECTION		ACTION
2	**INSPECT ATF CONDITION** • Inspect the ATF condition. (See 05–17A–10 Automatic Transaxle Fluid (ATF) Condition Inspection.) • Is it normal?	Yes	Go to the next step.
		No	Replace the ATF, then go to Step 8.
3	**INSPECT ATF LEVEL** • Start the engine. • Warm up the ATX. • Is the ATF level within the specification? (See 05–17A–11 Automatic Transaxle Fluid (ATF) Level Inspection.)	Yes	Go to the next step.
		No	Add ATF to the specified level, then go to Step 8. (See 05–17A–11 Automatic Transaxle Fluid (ATF) Level Inspection.)
4	**INSPECTION SHIFT SOLENOID VALVE A, B AND C FOR CLICK SOUND** • Perform operation inspection. (See 05–17A–28 SOLENOID VALVE INSPECTION (PRIMARY CONTROL VALVE BODY) [FS5A-EL].) • Verify the click sound of shift solenoid A, B, and C when applying B+ to each transaxle terminal. • Was a click heard from solenoids?	Yes	Go to the next step.
		No	Replace the solenoid where you could not hear a click sound, then go to Step 8. (See 05–17A–30 SOLENOID VALVE REMOVAL/INSTALLATION (PRIMARY CONTROL VALVE BODY) [FS5A-EL].)
5	**INSPECT LINE PRESSURE** • Start the engine. • Measure the line pressures. (See 05–17A–5 Line Pressure Test.) • Are the line pressures within the specifications?	Yes	Go to the next step.
		No	All ranges: Replace the oil pump, then go to Step 8. Any ranges: Replace the primary control valve body, then go to Step 8. (See 05–17A–46 PRIMARY CONTROL VALVE BODY REMOVAL [FS5A-EL].) (See 05–17A–47 PRIMARY CONTROL VALVE BODY INSTALLATION [FS5A-EL].)
6	**INSPECT STALL SPEED** • Measure the stall speed in D range. (See 05–17A–6 Stall Test.) • Is the stall speed within the specification?	Yes	Go to the next step.
		No	Replace the automatic transaxle, then go to Step 8. (See 05–17A–39 AUTOMATIC TRANSAXLE REMOVAL/INSTALLATION [FS5A-EL].)
7	**INSPECT FREQUENCY OF INPUT/TURBINE SPEED SENSOR WHEN DRIVING VEHICLE** • Turn the ignition switch to the LOCK position. • Connect the WDS or equivalent. • Start the engine. • Measure the frequency of input/turbine speed sensor while driving vehicle under the following conditions: — Vehicle speed (VSS PID): **40 km/h {24 mph}** — Drive in the D range, 2GR — Throttle opening angle (THOP PID): **approx. 25%** • Was the frequency of the input/turbine speed sensor at **approx. 1,300 Hz**?	Yes	Go to the next step.
		No	Replace the primary control valve body, then go to the next step. (See 05–17A–46 PRIMARY CONTROL VALVE BODY REMOVAL [FS5A-EL].) (See 05–17A–47 PRIMARY CONTROL VALVE BODY INSTALLATION [FS5A-EL].)
8	**VERIFY REPAIR OF DTC P0732** • Make sure to reconnect all the disconnected connectors. • Clear the DTC using the WDS or equivalent. • Start the engine. • Warm up the transaxle. • Drive the vehicle under the following conditions at least 3 times for **more than 1 s**: — ATF temperature (TFT PID): **20 °C {68 °F} or more** — Drive in the D range, 2GR — Vehicle speed (VSS PID): **3.8 km/h {2.4 mph} or more** • Are any DTCs present?	Yes	Replace the TCM, then go to the next step. (See 05–17A–38 TCM REMOVAL/INSTALLATION [FS5A-EL].)
		No	Go to the next step.
9	**VERIFY AFTER REPAIR PROCEDURE** • Perform the "After Repair Procedure". (See 05–02A–4 AFTER REPAIR PROCEDURE [FS5A-EL].) • Are any DTCs present?	Yes	Go to the applicable DTC inspection.
		No	DTC troubleshooting completed.

DTC P0733 [FS5A-EL]

E6U050200000W72

DTC P0733	Gear 3 incorrect (incorrect gear ratio detected)
DETECTION CONDITION	• The TCM monitors revolution ratio of the forward clutch drum revolution to the secondary gear case revolution when the following monitoring conditions are met. If the revolution ratio is **0.863 or less**, the TCM determines that there is a malfunction. **Monitoring conditions:** — Engine running — ATF temperature **20 °C {68 °F} or more** — Driving in 3 GR in D or M range — Torque converter clutch (TCC) not operating — Turbine speed **within 225—4,987 rpm** — Secondary gear revolution speed **50 rpm or more** — Differential gear case (output) revolution speed **35 rpm or more** — None of the following DTCs are present: P0706, P0707, P0708, P0712, P0713, P0715, P0720, P0751, P0752, P0753, P0756, P0757, P0758, P0761, P0762, P0763, P0766, P0767, P0768, P0771, P0772, P0773, P0791 • The TCM monitors revolution ratio of the forward clutch drum revolution to the secondary gear case revolution when the following monitoring conditions are met. If the revolution ratio is **2.175 or more**, the TCM determines that there is a malfunction. **Monitoring conditions:** — Engine running — ATF temperature **20 °C {68 °F} or more** — Driving in 3 GR in D or M range — Turbine speed **within 225—4,987 rpm** — Secondary gear revolution speed **50 rpm or more** — Differential gear case (output) revolution speed **35 rpm or more** — None of the following DTCs are present: P0706, P0707, P0708, P0712, P0713, P0715, P0720, P0751, P0752, P0753, P0756, P0757, P0758, P0761, P0762, P0763, P0766, P0767, P0768, P0771, P0772, P0773, P0791 • The TCM monitors revolution ratio of the forward clutch drum revolution to the secondary gear case revolution when the following monitoring conditions are met. If the revolution ratio is **within 1.345—1.644**, the TCM determines that there is a malfunction. **Monitoring conditions:** — Engine running — ATF temperature **20 °C {68 °F} or more** — Driving in 3 GR in D or M range — Torque converter clutch (TCC) not operating — Vehicle speed **26 km/h {16 mph} or more** — Turbine speed **within 225—4,987 rpm** — Secondary gear revolution speed **50 rpm or more** — Differential gear case (output) revolution speed **35 rpm or more** — None of the following DTCs are present: P0706, P0707, P0708, P0712, P0713, P0715, P0720, P0751, P0752, P0753, P0756, P0757, P0758, P0761, P0762, P0763, P0766, P0767, P0768, P0771, P0772, P0773, P0791 **Diagnostic support note:** • This is a continuous monitor (CCM). • The MIL does not illuminate. • The AT warning light illuminates if the TCM detects the above malfunction condition during the first drive cycle. • FREEZE FRAME DATA is not available. • A PENDING CODE is not available. • The DTC is stored in the TCM memory.
POSSIBLE CAUSE	• ATF level low • Deteriorated ATF • Shift solenoids A or C stuck • Pressure control solenoid A stuck • Line pressure low • 3-4 clutch slipping • Forward clutch slipping • Control valve stuck (Bypass, TCC or 3-4 shift valve) • Oil pump malfunction • TCM malfunction

Diagnostic procedure

STEP	INSPECTION		ACTION
1	**VERIFY RELATED REPAIR INFORMATION AVAILABILITY** • Verify related Service Bulletins and/or on-line repair information availability. • Is any related repair information available?	Yes	Perform repair or diagnosis according to the available repair information.
		No	Go to the next step.
2	**INSPECT ATF CONDITION** • Inspect the ATF condition. (See 05–17A–10 Automatic Transaxle Fluid (ATF) Condition Inspection.) • Is it normal?	Yes	Go to the next step.
		No	Replace the ATF, then go to Step 8.
3	**INSPECT ATF LEVEL** • Start the engine. • Warm up the ATX. • Is the ATF level within the specification? (See 05–17A–11 Automatic Transaxle Fluid (ATF) Level Inspection.)	Yes	Go to the next step.
		No	Add ATF to the specified level, then go to Step 8. (See 05–17A–11 Automatic Transaxle Fluid (ATF) Level Inspection.)
4	**INSPECTION SHIFT SOLENOID VALVE A AND C FOR CLICK SOUND** • Perform operation inspection. (See 05–17A–28 SOLENOID VALVE INSPECTION (PRIMARY CONTROL VALVE BODY) [FS5A-EL].) • Verify the click sound of shift solenoid A and C when applying B+ to each transaxle terminal. • Was a click heard from solenoids?	Yes	Go to the next step.
		No	Replace the solenoid where you could not hear a click sound, then go to Step 8. (See 05–17A–30 SOLENOID VALVE REMOVAL/INSTALLATION (PRIMARY CONTROL VALVE BODY) [FS5A-EL].)
5	**INSPECT LINE PRESSURE** • Start the engine. • Measure the line pressures. (See 05–17A–5 Line Pressure Test.) • Are the line pressures within the specifications?	Yes	Go to the next step.
		No	All ranges: Replace the oil pump, then go to Step 8. Any ranges: Replace the primary control valve body, then go to Step 8. (See 05–17A–46 PRIMARY CONTROL VALVE BODY REMOVAL [FS5A-EL].) (See 05–17A–47 PRIMARY CONTROL VALVE BODY INSTALLATION [FS5A-EL].)
6	**INSPECT STALL SPEED** • Measure the stall speed in D range. (See 05–17A–6 Stall Test.) • Is the stall speed within the specification?	Yes	Go to the next step.
		No	Replace the automatic transaxle, then go to Step 8. (See 05–17A–39 AUTOMATIC TRANSAXLE REMOVAL/INSTALLATION [FS5A-EL].)
7	**INSPECT FREQUENCY OF INPUT/TURBINE SPEED SENSOR WHEN DRIVING VEHICLE** • Turn the ignition switch to the LOCK position. • Connect the WDS or equivalent. • Start the engine. • Measure the frequency of input/turbine speed sensor while driving vehicle under the following conditions: — Vehicle speed (VSS PID): **60 km/h {37 mph}** — Drive in the D range, 3GR — Throttle opening angle (THOP PID): **approx. 25%** • Was the frequency of the input/turbine speed sensor at **approx. 1,300 Hz**?	Yes	Go to the next step.
		No	Replace the primary control valve body, then go to the next step. (See 05–17A–46 PRIMARY CONTROL VALVE BODY REMOVAL [FS5A-EL].) (See 05–17A–47 PRIMARY CONTROL VALVE BODY INSTALLATION [FS5A-EL].)
8	**VERIFY REPAIR OF DTC P0733** • Make sure to reconnect all the disconnected connectors. • Clear the DTC using the WDS or equivalent. • Start the engine. • Warm up the transaxle. • Drive the vehicle under the following conditions for **more than 2 s**: — ATF temperature (TFT PID): **20 °C {68 °F} or more** — Drive in the D range, 3GR — Vehicle speed (VSS PID): **4 km/h {3 mph} or more** • Are any DTCs present?	Yes	Replace the TCM, then go to the next step. (See 05–17A–38 TCM REMOVAL/INSTALLATION [FS5A-EL].)
		No	Go to the next step.
9	**VERIFY AFTER REPAIR PROCEDURE** • Perform the "After Repair Procedure". (See 05–02A–4 AFTER REPAIR PROCEDURE [FS5A-EL].) • Are any DTCs present?	Yes	Go to the applicable DTC inspection.
		No	DTC troubleshooting completed.

DTC P0734 [FS5A-EL]

E6U050200000W73

DTC P0734	Gear 4 incorrect (incorrect gear ratio detected)
DETECTION CONDITION	• The TCM monitors revolution ratio of the forward clutch drum revolution to the secondary gear case revolution when the following monitoring conditions are met. If the revolution ratio is **0.6 or less** or **1.249 or more**, the TCM determines that there is a malfunction. **Monitoring conditions:** — Engine running — ATF temperature **20 °C {68 °F} or more** — Driving in 4GR in D or M range — Turbine speed **within 225—4,987 rpm** — Secondary gear revolution speed **50 rpm or more** — Vehicle speed **28 km/h {17 mph} or more** — Throttle opening angle at closed throttle position — Differential gear case (output) revolution speed **35 rpm or more** — None of the following DTCs are present: P0706, P0707, P0708, P0712, P0713, P0715, P0720, P0751, P0752, P0753, P0756, P0757, P0758, P0761, P0762, P0763, P0766, P0767, P0768, P0771, P0772, P0773, P0791 • The TCM monitors revolution ratio of the forward clutch drum revolution to the secondary gear case revolution when the following monitoring conditions are met. If the revolution ratio is **within 0.91—1.09**, the TCM determines that there is a malfunction. **Monitoring conditions:** — Engine running — ATF temperature **20 °C {68 °F} or more** — Driving in 4GR in D or M range — Torque converter clutch (TCC) not operating — Vehicle speed **36 km/h {22 mph} or more** — Turbine speed **within 225—4,987 rpm** — Secondary gear revolution speed **50 rpm or more** — Differential gear case (output) revolution speed **35 rpm or more** — None of the following DTCs are present: P0706, P0707, P0708, P0712, P0713, P0715, P0720, P0751, P0752, P0753, P0756, P0757, P0758, P0761, P0762, P0763, P0766, P0767, P0768, P0771, P0772, P0773, P0791 **Diagnostic support note:** • This is a continuous monitor (CCM). • The MIL does not illuminate. • The AT warning light illuminates if the TCM detects the above malfunction condition during the first drive cycle. • FREEZE FRAME DATA is not available. • A PENDING CODE is not available. • The DTC is stored in the TCM memory.
POSSIBLE CAUSE	• ATF level low • Deteriorated ATF • Shift solenoids A, B or C stuck • Pressure control solenoid A stuck • Line pressure low • 2-4 brake band slipping • 3-4 clutch slipping • Forward clutch slipping • Control valve stuck (Bypass or 3-4 shift valve) • Oil pump malfunction • TCM malfunction

Diagnostic procedure

STEP	INSPECTION		ACTION
1	**VERIFY RELATED REPAIR INFORMATION AVAILABILITY** • Verify related Service Bulletins and/or on-line repair information availability. • Is any related repair information available?	Yes	Perform repair or diagnosis according to the available repair information.
		No	Go to the next step.
2	**INSPECT ATF CONDITION** • Inspect the ATF condition. (See 05–17A–10 Automatic Transaxle Fluid (ATF) Condition Inspection.) • Is it normal?	Yes	Go to the next step.
		No	Replace the ATF, then go to Step 8.
3	**INSPECT ATF LEVEL** • Start the engine. • Warm up the ATX. • Is the ATF level within the specification? (See 05–17A–11 Automatic Transaxle Fluid (ATF) Level Inspection.)	Yes	Go to the next step.
		No	Add ATF to the specified level, then go to Step 8. (See 05–17A–11 Automatic Transaxle Fluid (ATF) Level Inspection.)

STEP	INSPECTION		ACTION
4	**INSPECT SHIFT SOLENOID A AND D FOR CLICK SOUND** • Perform operation inspection. (See 05–17A–28 SOLENOID VALVE INSPECTION (PRIMARY CONTROL VALVE BODY) [FS5A-EL].) • Verify the click sound of shift solenoids A and D when applying B+ to each transaxle terminal. **Note** • The click from solenoid D is barely audible. Remove solenoids to correctly inspect if necessary. • Was a click heard from solenoids?	Yes	Go to the next step.
		No	Replace the solenoid where you could not hear click sound then go to Step 8. (See 05–17A–30 SOLENOID VALVE REMOVAL/ INSTALLATION (PRIMARY CONTROL VALVE BODY) [FS5A-EL].)
5	**INSPECT LINE PRESSURE** • Start the engine. • Measure the line pressures. (See 05–17A–5 Line Pressure Test.) • Are the line pressures within the specifications?	Yes	Go to the next step.
		No	All ranges: Replace the oil pump, then go to Step 8. Any ranges: Replace the primary control valve body, then go to Step 8. (See 05–17A–46 PRIMARY CONTROL VALVE BODY REMOVAL [FS5A-EL].) (See 05–17A–47 PRIMARY CONTROL VALVE BODY INSTALLATION [FS5A-EL].)
6	**INSPECT STALL SPEED** • Measure the stall speed in D range. (See 05–17A–6 Stall Test.) • Is the stall speed within the specification?	Yes	Go to the next step.
		No	Replace the automatic transaxle, then go to Step 8. (See 05–17A–39 AUTOMATIC TRANSAXLE REMOVAL/ INSTALLATION [FS5A-EL].)
7	**INSPECT FREQUENCY OF INPUT/TURBINE SPEED SENSOR WHEN DRIVING VEHICLE** • Turn the ignition switch to the LOCK position. • Connect the WDS or equivalent. • Start the engine. • Measure the frequency of input/turbine speed sensor while driving vehicle under the following conditions: — Vehicle speed (VSS PID): **80 km/h {49 mph}** — Drive in the D range, 4GR — Throttle opening angle (THOP PID): **approx. 25%** • Was the frequency of the input/turbine speed sensor at **approx. 1,300 Hz**?	Yes	Go to the next step.
		No	Replace the primary control valve body, then go to the next step. (See 05–17A–46 PRIMARY CONTROL VALVE BODY REMOVAL [FS5A-EL].) (See 05–17A–47 PRIMARY CONTROL VALVE BODY INSTALLATION [FS5A-EL].)
8	**VERIFY REPAIR OF DTC P0734** • Make sure to reconnect all the disconnected connectors. • Clear the DTC using the WDS or equivalent. • Start the engine. • Warm up the transaxle. • Drive the vehicle under the following conditions for **more than 5 s**: — ATF temperature (TFT PID): **20 °C {68 °F} or more** — Drive in the D range, 4GR — Throttle opening angle (THOP PID): **0%** — Vehicle speed (VSS PID): **28 km/h {17 mph} or more** • Are any DTCs present?	Yes	Replace the TCM, then go to the next step. (See 05–17A–38 TCM REMOVAL/INSTALLATION [FS5A-EL].)
		No	Go to the next step.
9	**VERIFY AFTER REPAIR PROCEDURE** • Perform the "After Repair Procedure". (See 05–02A–4 AFTER REPAIR PROCEDURE [FS5A-EL].) • Are any DTCs present?	Yes	Go to the applicable DTC inspection.
		No	DTC troubleshooting completed.

DTC P0735 [FS5A-EL]

E6U050200000W74

DTC P0735	Gear 5 incorrect (incorrect gear ratio detected)
DETECTION CONDITION	• The TCM monitors revolution ratio of the secondary gear revolution to the differential gear case revolution when the following monitoring conditions are met. When any of the following conditions are met: — Revolution ratio of the secondary gear and the differential gear case is **1.11 or less** when driving in 3GR or 4GR. — Revolution ratio of the secondary gear and differential gear case is **1.11 or more** when driving in 5GR. **Monitoring conditions:** — Engine running — ATF temperature **20 °C {68 °F} or more** — Throttle opening angle **4.14% or more** — Secondary gear revolution speed **50 rpm or more** — Turbine speed **within 225—4,987 rpm** — Vehicle speed **29 km/h {18 mph} or more** — Differential gear case (output) revolution speed **35 rpm or more** — None of the following DTCs are present: P0706, P0707, P0708, P0712, P0713, P0715, P0720, P0777, P0778, P0791, P2707, P2708, P2709 **Diagnostic support note:** • This is a continuous monitor (CCM). • The MIL does not illuminate. • The AT warning light illuminates if the TCM detects the above malfunction condition during the first drive cycle. • FREEZE FRAME DATA is not available. • A PENDING CODE is not available. • The DTC is stored in the TCM memory.
POSSIBLE CAUSE	• ATF level low • Deteriorated ATF • Shift solenoid F stuck • Pressure control solenoid B stuck • Line pressure low • Direct clutch slipping • Reduction brake slipping • Control valve stuck (Bypass or 4-5 shift valve) • Oil pump malfunction • TCM malfunction

Diagnostic procedure

STEP	INSPECTION		ACTION
1	**VERIFY RELATED REPAIR INFORMATION AVAILABILITY** • Verify related Service Bulletins and/or on-line repair information availability. • Is any related repair information available?	Yes	Perform repair or diagnosis according to the available repair information.
		No	Go to the next step.
2	**INSPECT ATF CONDITION** • Inspect the ATF condition. (See 05–17A–10 Automatic Transaxle Fluid (ATF) Condition Inspection.) • Is it normal?	Yes	Go to the next step.
		No	Replace the ATF, then go to Step 9.
3	**INSPECT ATF LEVEL** • Start the engine. • Warm up the ATX. • Is the ATF level within the specification? (See 05–17A–11 Automatic Transaxle Fluid (ATF) Level Inspection.)	Yes	Go to the next step.
		No	Add ATF to the specified level, then go to Step 9. (See 05–17A–11 Automatic Transaxle Fluid (ATF) Level Inspection.)
4	**INSPECT SHIFT SOLENOID F AND PRESSURE CONTROL SOLENOID B FOR CLICK SOUND** • Perform operation inspection. (See 05–17A–31 SOLENOID VALVE INSPECTION (SECONDARY CONTROL VALVE BODY) [FS5A-EL].) • Verify the click sound of shift solenoid F and pressure control solenoid B when applying B+ to each transaxle terminal. • Was a click heard from solenoids?	Yes	Go to the next step.
		No	Replace the solenoid where you could not hear click sound, then go to Step 9. (See 05–17A–30 SOLENOID VALVE REMOVAL/ INSTALLATION (PRIMARY CONTROL VALVE BODY) [FS5A-EL].)

STEP	INSPECTION		ACTION
5	**INSPECT LINE PRESSURE** • Start the engine. • Measure the line pressures. (See 05–17A–5 Line Pressure Test.) • Are the line pressures within the specifications?	Yes	Go to the next step.
		No	All ranges: Replace the oil pump, then go to Step 9. Any ranges: Replace the secondary control valve body, then go to Step 8. (See 05–17A–48 SECONDARY CONTROL VALVE BODY REMOVAL [FS5A-EL].) (See 05–17A–49 SECONDARY CONTROL VALVE BODY INSTALLATION [FS5A-EL].)
6	**INSPECT STALL SPEED** • Measure the stall speed in D range. (See 05–17A–6 Stall Test.) • Is the stall speed within the specification?	Yes	Go to the next step.
		No	Replace the automatic transaxle, then go to Step 9. (See 05–17A–39 AUTOMATIC TRANSAXLE REMOVAL/ INSTALLATION [FS5A-EL].)
7	**INSPECT FREQUENCY OF INTERMEDIATE SENSOR WHEN DRIVING VEHICLE** • Turn the ignition switch to the LOCK position. • Connect the WDS or equivalent. • Start the engine. • Measure the frequency of intermediate sensor while driving vehicle under the following conditions: — Vehicle speed (VSS PID): **80 km/h {49 mph}** — Drive in the D range, 4GR — Throttle opening angle (THOP PID): **approx. 25%** • Was the frequency of the intermediate sensor at **approx. 4,800 Hz**?	Yes	Go to the next step.
		No	Replace the secondary control valve body, then go to the next step. (See 05–17A–48 SECONDARY CONTROL VALVE BODY REMOVAL [FS5A-EL].) (See 05–17A–49 SECONDARY CONTROL VALVE BODY INSTALLATION [FS5A-EL].)
8	**INSPECT FREQUENCY OF INTERMEDIATE SENSOR WHEN DRIVING VEHICLE** • Turn the ignition switch to the LOCK position. • Connect the WDS or equivalent. • Start the engine. • Measure the frequency of input/turbine speed sensor while driving vehicle under the following conditions: — Vehicle speed (VSS PID): **90 km/h {56 mph}** — Drive in the D range, 5GR — Throttle opening angle (THOP PID): **approx. 25%** • Was the frequency of the input/turbine speed sensor at **approx. 4,100 Hz**?	Yes	Go to the next step.
		No	Replace the secondary control valve body, then go to the next step. (See 05–17A–48 SECONDARY CONTROL VALVE BODY REMOVAL [FS5A-EL].) (See 05–17A–49 SECONDARY CONTROL VALVE BOD INSTALLATION [FS5A-EL].)
9	**VERIFY REPAIR OF DTC P0735** • Make sure to reconnect all the disconnected connectors. • Clear the DTC using the WDS or equivalent. • Start the engine. • Warm up the transaxle. • Drive the vehicle under the following conditions for **more than 5 s**: — ATF temperature (TFT PID): **20 °C {68 °F} or more** — Drive in the D range, 5GR — Throttle opening angle (THOP PID): **4.14% or more** • Are any DTCs present?	Yes	Replace the TCM, then go to the next step. (See 05–17A–38 TCM REMOVAL/INSTALLATION [FS5A-EL].)
		No	Go to the next step.
10	**VERIFY AFTER REPAIR PROCEDURE** • Perform the "After Repair Procedure". (See 05–02A–4 AFTER REPAIR PROCEDURE [FS5A-EL].) • Are any DTCs present?	Yes	Go to the applicable DTC inspection.
		No	DTC troubleshooting completed.

DTC P0741 [FS5A-EL]

E6U050200000W75

DTC P0741	Torque converter clutch (TCC) stuck off
DETECTION CONDITION	• When all conditions below are satisfied. — ATF temperature **20 °C {68 °F} or more** — Driving in 4GR at D range — Engine running — Turbine speed **within 225—4,987 rpm** — Vehicle speed **within 60—100 km/h {37—62 mph}** — Torque converter clutch (TCC) operating — Shift solenoid A duty value exceeds **99%** — Difference between engine speed and turbine speed **more than 100 rpm** — None of the following DTCs are present: P0706, P0707, P0708, P0712, P0713, P0715, P0720, P0751, P0752, P0753, P0756, P0757, P0758, P0761, P0762, P0763, P0766, P0767, P0768, P0771, P0772, P0773, P0791 **Diagnostic support note:** • This is a continuous monitor (CCM). • The MIL does not illuminate if TCM detects the above malfunction conditions during first the drive cycle. • A PENDING CODE is not available. • FREEZE FRAME DATA is not available. • The AT warning light illuminates • The DTC is stored in the TCM memory.
POSSIBLE CAUSE	• ATF level low • Deteriorated ATF • Shift solenoids A, B, C, D, E, and pressure control solenoid A stuck • Line pressure low • 2-4 brake band slipping • 3-4 clutch slipping • Control valve stuck • TCM malfunction

Diagnostic procedure

STEP	INSPECTION		ACTION
1	**VERIFY RELATED REPAIR INFORMATION AVAILABILITY** • Verify related Service Bulletins and/or on-line repair information availability. • Is any related repair information available?	Yes	Perform repair or diagnosis according to the available repair information. • If the vehicle is not repaired, go to the next step.
		No	Go to the next step.
2	**INSPECT ATF CONDITION** • Turn the ignition switch to the LOCK position. • Inspect the ATF condition. — Clear red: Normal — Milky: Water mixed in fluid — Reddish brown: Deteriorated ATF • Is it normal? (See 05–17A–10 Automatic Transaxle Fluid (ATF) Condition Inspection.)	Yes	Go to the next step.
		No	If the ATF color is milky or reddish brown, replace ATF, then go to Step 4. (See 05–17A–12 AUTOMATIC TRANSAXLE FLUID (ATF) REPLACEMENT [FS5A-EL].)
3	**INSPECT ATF LEVEL** • Start the engine. • Warm up the ATX. • Is the ATF level within the specification? (See 05–17A–11 Automatic Transaxle Fluid (ATF) Level Inspection.)	Yes	Go to the next step.
		No	Add ATF to the specified level, then go to Step 6. (See 05–17A–11 Automatic Transaxle Fluid (ATF) Level Inspection.)
4	**INSPECT LINE PRESSURE** • Start the engine. • Measure the line pressures. (See 05–17A–5 Line Pressure Test.) • Are the line pressures within the specifications?	Yes	Go to the next step.
		No	• All ranges: Replace the oil pump or control valve body, then go to Step 6. • Any ranges: Replace the automatic transaxle, then go to Step 6. (See 05–17A–39 AUTOMATIC TRANSAXLE REMOVAL/INSTALLATION [FS5A-EL].) (See ATX Workshop Manual FS5A-EL.)
5	**INSPECT OPERATION OF EACH VALVE AND EACH SPRING** • Turn the ignition switch to the LOCK position. • Remove the primary control valve body. • Disassemble the primary control valve body. • Is each valve operation normal and is the return spring normal? (See 05–17A–46 PRIMARY CONTROL VALVE BODY REMOVAL [FS5A-EL].) (See 05–17A–47 PRIMARY CONTROL VALVE BODY INSTALLATION [FS5A-EL].) (See ATX Workshop Manual FS5A-EL.)	Yes	Replace the automatic transaxle, then go to the next step (See 05–17A–39 AUTOMATIC TRANSAXLE REMOVAL/INSTALLATION [FS5A-EL].) (See ATX Workshop Manual FS5A-EL.)
		No	Repair or replace the shift valve and return spring, then go to the next step. (See 05–17A–46 PRIMARY CONTROL VALVE BODY REMOVAL [FS5A-EL].) (See 05–17A–47 PRIMARY CONTROL VALVE BODY INSTALLATION [FS5A-EL].) (See ATX Workshop Manual FS5A-EL.)
6	**VERIFY TROUBLESHOOTING OF DTC P0741 COMPLETED** • Make sure to reconnect all the disconnected connectors. • Clear the DTC from the memory using the WDS or equivalent. • Start the engine. • Warm up engine and ATX. • Drive the vehicle under the following conditions for **5 s or more.** — ATF temperature (TFT PID): **20 °C {68 °F} or more** — Drive in the D range, 4GR (TCC operation) — Vehicle speed (VSS PID): **within 60—100 km/h {37—62 mph}** • Are any DTCs present?	Yes	Replace the TCM, then go to the next step. (See 05–17A–38 TCM REMOVAL/INSTALLATION [FS5A-EL].)
		No	Go to the next step.
7	**VERIFY AFTER REPAIR PROCEDURE** • Perform the "After Repair Procedure". (See 05–02A–4 AFTER REPAIR PROCEDURE [FS5A-EL].) • Are any DTCs present?	Yes	Go to the applicable DTC inspection.
		No	DTC troubleshooting completed.

DTC P0742 [FS5A-EL]

E6U050200000W76

DTC P0742	Torque converter clutch (TCC) stuck on
DETECTION CONDITION	• All of the following conditions are satisfied under each of the following throttle conditions. — ATF temperature **20 °C {68 °F} or more** — Driving in 4GR at D or M range — Engine running — Turbine speed **within 225—4,987 rpm** — Vehicle speed **70 km/h {43 mph} or less** — Torque converter clutch (TCC) not operating — Difference between engine speed and turbine speed **50 rpm or less** — DTC P0734 not output • Throttle conditions — Throttle opening angle (THOP PID) is **6.25% or more** and **5 s or more** have passed. — Throttle opening angle (THOP PID) is **within 3.13—6.25%** and **3 s or more** have passed. — Throttle opening angle is at closed throttle position and **5 s or more** have passed. **Diagnostic support note:** • This is a continuous monitor (CCM). • The MIL does not illuminate if TCM detects the above malfunction conditions during first the drive cycle. • A PENDING CODE is not available. • FREEZE FRAME DATA is not available. • The AT warning light illuminates. • The DTC is stored in the TCM memory.
POSSIBLE CAUSE	• ATF level low • Deteriorated ATF • Shift solenoids A, B, C, D, E, and pressure control solenoid A stuck • Line pressure low • 2-4 brake band slipping • 3-4 clutch slipping • Control valve stuck • TCM malfunction

Diagnostic procedure

TEP	INSPECTION		ACTION
1	**VERIFY RELATED REPAIR INFORMATION AVAILABILITY** • Verify related Service Bulletins and/or on-line repair information availability. • Is any related repair information available?	Yes	Perform repair or diagnosis according to the available repair information. • If the vehicle is not repaired, go to the next step.
		No	Go to the next step.
2	**INSPECT ATF CONDITION** • Turn the ignition switch to the LOCK position. • Inspect the ATF condition. — Clear red: Normal — Milky: Water mixed in fluid — Reddish brown: Deteriorated ATF • Is it normal? (See 05–17A–10 Automatic Transaxle Fluid (ATF) Condition Inspection.)	Yes	Go to the next step.
		No	If the ATF color is milky or reddish brown, replace ATF, then go to Step 4. (See 05–17A–12 AUTOMATIC TRANSAXLE FLUID (ATF) REPLACEMENT [FS5A-EL].)
3	**INSPECT ATF LEVEL** • Start the engine. • Warm up the ATX. • Is the ATF level within the specification? (See 05–17A–11 Automatic Transaxle Fluid (ATF) Level Inspection.)	Yes	Go to the next step.
		No	Add ATF to the specified level, then go to Step 6. (See 05–17A–11 Automatic Transaxle Fluid (ATF) Level Inspection.)
4	**INSPECT LINE PRESSURE** • Start the engine. • Measure the line pressures. (See 05–17A–5 Line Pressure Test.) • Are the line pressures within the specifications?	Yes	Go to the next step.
		No	• All ranges: Replace the oil pump or control valve body, then go to Step 6. • Any ranges: Replace the automatic transaxle, then go to Step 6. (See 05–17A–39 AUTOMATIC TRANSAXLE REMOVAL/INSTALLATION [FS5A-EL].) (See ATX Workshop Manual FS5A-EL.)

STEP	INSPECTION		ACTION
5	**INSPECT OPERATION OF EACH VALVE AND EACH SPRING** • Turn the ignition switch to the LOCK position. • Remove the primary control valve body. • Disassemble the primary control valve body. • Is each valve operation normal and is the return spring normal? (See 05–17A–46 PRIMARY CONTROL VALVE BODY REMOVAL [FS5A-EL].) (See 05–17A–47 PRIMARY CONTROL VALVE BODY INSTALLATION [FS5A-EL].) (See ATX Workshop Manual FS5A-EL.)	Yes	Replace the automatic transaxle, then go to the next step. (See 05–17A–39 AUTOMATIC TRANSAXLE REMOVAL/ INSTALLATION [FS5A-EL].) (See ATX Workshop Manual FS5A-EL.)
		No	Repair or replace the shift valve and return spring, then go to the next step. (See 05–17A–46 PRIMARY CONTROL VALVE BODY REMOVAL [FS5A-EL].) (See 05–17A–47 PRIMARY CONTROL VALVE BODY INSTALLATION [FS5A-EL].) (See ATX Workshop Manual FS5A-EL.)
6	**VERIFY TROUBLESHOOTING OF DTC P0742 COMPLETED** • Make sure to reconnect all the disconnected connectors. • Clear the DTC from the memory using the WDS or equivalent. • Start the engine. • Warm up engine and ATX. • Drive the vehicle under the following conditions: — ATF temperature (TFT PID): **20 °C {68 °F} or more** — Drive in the D range, 4GR (TCC not in operation) — Vehicle speed (VSS PID): **70 km/h {43 mph} or less**. • Throttle conditions — Throttle opening angle (THOP PID) **6.25% or more** and **5 s or more** have passed. — Throttle opening angle (THOP PID) **within 3.13—6.25%** and **3 s or more** have passed. — Throttle opening angle at closed throttle position and **5 s or more** have passed. • Are any DTCs present?	Yes	Replace the TCM, then go to the next step. (See 05–17A–38 TCM REMOVAL/INSTALLATION [FS5A-EL].)
		No	Go to the next step.
7	**VERIFY AFTER REPAIR PROCEDURE** • Perform the "After Repair Procedure". (See 05–02A–4 AFTER REPAIR PROCEDURE [FS5A-EL].) • Are any DTCs present?	Yes	Go to the applicable DTC inspection.
		No	DTC troubleshooting completed.

DTC P0744 [FS5A-EL]

E6U050200000W77

DTC P0744	Slip control malfunction
DETECTION CONDITION	• With the engine running, all of the following conditions are met: — ATF temperature **20 °C {68 °F} or more** — Secondary gear revolution speed **50 rpm or more** — Differential gear case (output) revolution speed **35 rpm or more** — Throttle opening angle **18.75% or less** — Torque converter clutch (TCC) operating — Drive the vehicle at 3GR, 4GR, or 5GR, slip control operation — When any of the following conditions are met: • Revolution ratio of the forward clutch drum to secondary gear is **1.344 or less** or **1.645 or more** when driving in 2GR. • Revolution ratio of the forward clutch drum to secondary gear is **0.91 or less** or **1.09 or more** when driving in 3GR. • Revolution ratio of the forward clutch drum to secondary gear is **0.636 or less** or **0.817 or more** when driving in 4GR. — None of the following DTCs are present: P0706, P0707, P0708, P0712, P0713, P0715, P0720, P0751, P0752, P0753, P0756, P0757, P0758, P0761, P0762, P0763, P0766, P0767, P0768, P0771, P0772, P0773, P0791 **Diagnostic support note:** • This is a continuous monitor (CCM). • The MIL does not illuminates if the TCM detects the above malfunction condition in two consecutive drive cycles or in one drive cycle while the DTC for the same malfunction has been stored in the TCM. • A PENDING CODE is not available. • FREEZE FRAME DATA is not available. • The AT warning light illuminates. • DTCs are stored in the TCM memory.
POSSIBLE CAUSE	• Forward clutch not engaged or slipped • Short to power supply in wiring harness between shift solenoid A terminal B and TCM terminal 1A • Shift solenoid A stuck on • Short to power supply in wiring harness between shift solenoid D terminal A and TCM terminal 1F • Shift solenoid D stuck on • Short to ground in wiring harness between shift solenoid E terminal A and TCM terminal 1H • Shift solenoid E stuck off • TCM malfunction

Diagnostic procedure

STEP	INSPECTION		ACTION
1	**VERIFY FREEZE FRAME DATA HAS BEEN RECORDED** • Has the FREEZE FRAME DATA been recorded?	Yes	Go to the next step.
		No	Record the FREEZE FRAME DATA on the repair order, then go to the next step.
2	**VERIFY DTCS** • Turn the ignition switch to the LOCK position, then to the ON position. • Verify the DTCs in the TCM memory. • Are DTCs P0752, P0753, P0767, P0768, P0771, and P0773 output?	Yes	Go to the applicable DTC inspection.
		No	Replace the forward clutch, then go to the next step.
3	**VERIFY TROUBLESHOOTING OF DTC P0744 COMPLETED** • Make sure to reconnect all the disconnected connectors. • Clear the DTC from the memory using the WDS or equivalent. • Warm up the engine. • Drive the vehicle under the following conditions and make sure that gears shift smoothly from 1GR to 5GR. — ATF temperature (TFT PID): **20 °C {68 °F} or more** — Drive in the D range — Throttle opening angle (THOP PID): **18.75% or less** • Are any DTCs present?	Yes	Replace the TCM, then go to the next step. (See 05–17A–38 TCM REMOVAL/INSTALLATION [FS5A-EL].)
		No	No concern is detected. Go to the next step.
4	**VERIFY AFTER REPAIR PROCEDURE** • Perform the "After Repair Procedure". (See 05–02A–4 AFTER REPAIR PROCEDURE [FS5A-EL].) • Are any DTCs present?	Yes	Go to the applicable DTC inspection.
		No	DTC troubleshooting completed.

DTC P0745 [FS5A-EL]

E6U050200000W78

DTC P0745	Pressure control solenoid A malfunction
DETECTION CONDITION	• If the TCM detects either of the following conditions, the TCM determines that pressure control solenoid A circuit has a malfunction. — Pressure control solenoid A voltage stuck **0 V** after engine start — Pressure control solenoid A voltage stuck **B+** after engine start **Diagnostic support note:** • This is a continuous monitor (CCM). • The MIL does not illuminate if TCM detects above malfunction conditions during the first drive cycle. • A PENDING CODE is not available. • FREEZE FRAME DATA is not available. • The AT warning light illuminates. • The DTC is stored in the TCM memory.
POSSIBLE CAUSE	• Pressure control solenoid A malfunction • Open circuit in wiring harness between pressure control solenoid A terminal B and transaxle connector (primary) terminal I • Open circuit in wiring harness between transaxle connector (primary) terminal I and TCM terminal 1G • Short to ground in wiring harness between transaxle connector (primary) terminal D and TCM terminal 1E • Short to power supply in wiring harness between transaxle connector (primary) terminal D and TCM terminal 1E • Open circuit in wiring harness between pressure control solenoid terminal A and transaxle connector (primary) terminal D • Open circuit in wiring harness between transaxle connector (primary) terminal D and TCM terminal 1E • Damaged connector between pressure control solenoid A and TCM • TCM malfunction

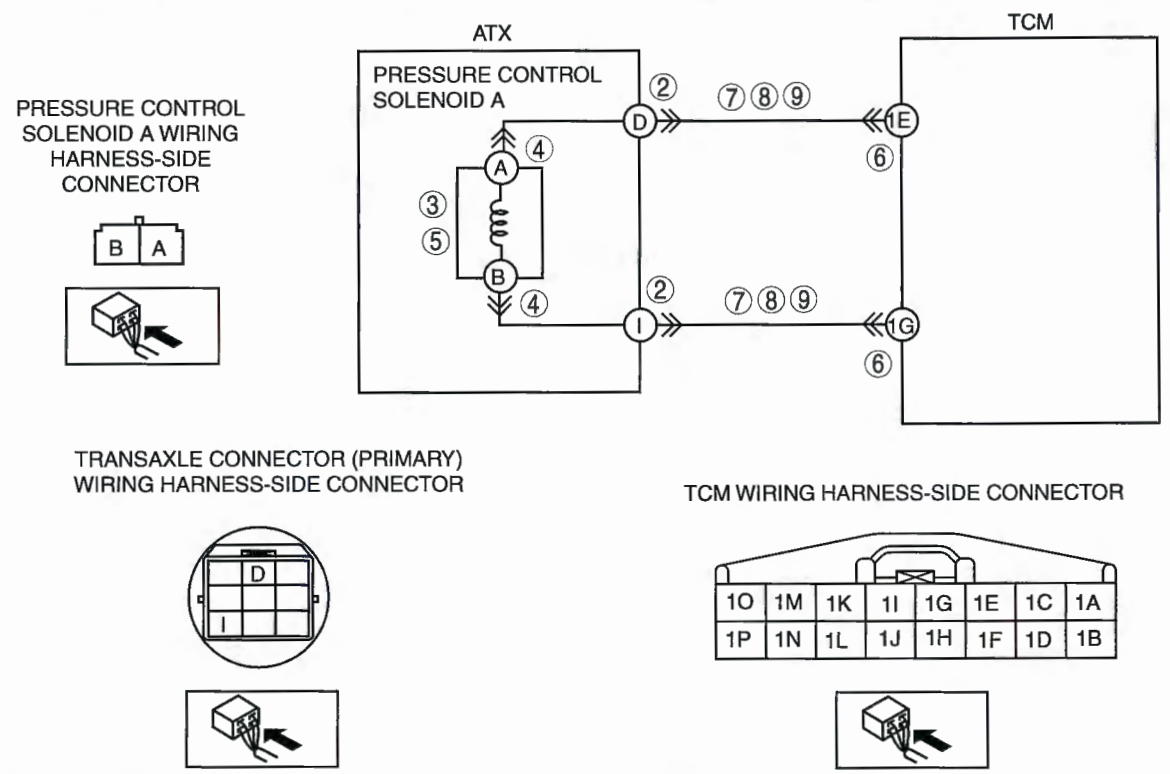

Diagnostic procedure

STEP	INSPECTION		ACTION
1	**VERIFY RELATED REPAIR INFORMATION AVAILABILITY** • Verify related Service Bulletins and/or on-line repair information availability. • Is any related repair information available?	Yes	Perform repair or diagnosis according to the available repair information. • If the vehicle is not repaired, go to the next step.
		No	Go to the next step.
2	**INSPECT TRANSAXLE CONNECTOR FOR POOR CONNECTION** • Turn the ignition switch to the LOCK position. • Disconnect the transaxle connector (primary). • Inspect for poor connection (such as damaged/ pulled-out pins, corrosion). • Is the connection normal?	Yes	Go to the next step.
		No	Repair or replace the connector and/or terminals, then go to Step 10.

STEP	INSPECTION		ACTION
3	**INSPECT RESISTANCE** • Inspect the resistance between transaxle connector (primary) terminals D and I (transaxle case side). • Is the resistance **within 2.4—7.3 ohms**? (See 05–17A–28 Resistance Inspection (On-Vehicle Inspection).)	Yes	Go to Step 6.
		No	Go to the next step.
4	**INSPECT PRESSURE CONTROL SOLENOID CONNECTOR FOR POOR CONNECTION** • Disconnect the pressure control solenoid connector. • Inspect for poor connection (such as damaged/ pulled-out pins, corrosion). • Is the connection normal?	Yes	Go to the next step.
		No	Repair or replace the connector and/or terminals, then go to Step 10.
5	**INSPECT RESISTANCE** • Inspect the resistance between the pressure control solenoid terminals A and B. • Is the resistance **within 2.4—7.3 ohms**? (See 05–17A–29 Resistance Inspection (Off-Vehicle Inspection).)	Yes	Replace the solenoid wiring harness, then go to Step 10.
		No	Verify pressure control solenoid installation. • If solenoid installed correctly, replace the pressure control solenoid, then go to Step 10. (See 05–17A–30 SOLENOID VALVE REMOVAL/ INSTALLATION (PRIMARY CONTROL VALVE BODY) [FS5A-EL].)
6	**INSPECT TCM CONNECTOR FOR POOR CONNECTION** • Disconnect the TCM connector. • Inspect for poor connection (such as damaged/ pulled-out pins, corrosion). • Is the connection normal?	Yes	Go to the next step.
		No	Repair or replace the connector and/or terminals, then go to Step 10.
7	**INSPECT TRANSAXLE CONNECTOR CIRCUIT FOR OPEN CIRCUIT** • Inspect for continuity between the TCM (wiring harness-side) and transaxle connector (primary) (wiring harness-side). — TCM terminal 1E and transaxle connector (primary) terminal D — TCM terminal 1G and transaxle connector (primary) terminal I • Is there continuity between terminals?	Yes	Go to the next step.
		No	Repair or replace the wiring harness, the go to Step 10.
8	**INSPECT TRANSAXLE CONNECTOR CIRCUIT FOR SHORT TO POWER SUPPLY** • Turn the ignition switch to the ON position (engine off). • Inspect the voltage at transaxle connector (primary) terminal D (wiring harness-side). • Is the voltage **0 V**?	Yes	Go to the next step.
		No	Repair or replace the wiring harness, then go to Step 10.
9	**INSPECT TCM CIRCUIT FOR SHORT TO GROUND** • Turn the ignition switch to the LOCK position. • Inspect for continuity between transaxle connector (primary) terminal D (wiring harness-side) and body ground. • Is there continuity?	Yes	Repair or replace the wiring harness, then go to the next step.
		No	Go to the next step.
10	**VERIFY TROUBLESHOOTING OF DTC P0745 COMPLETED** • Make sure to reconnect all the disconnected connectors. • Clear the DTC from the memory using the WDS or equivalent. • Make sure to wait **more than 1 s** after turning the ignition switch to the ON position. • Are any DTCs present?	Yes	Replace the TCM, then go to the next step. (See 05–17A–38 TCM REMOVAL/INSTALLATION [FS5A-EL].)
		No	No concern is detected. Go to the next step.
11	**VERIFY AFTER REPAIR PROCEDURE** • Perform the "After Repair Procedure". (See 05–02A–4 AFTER REPAIR PROCEDURE [FS5A-EL].) • Are any DTCs present?	Yes	Go to the applicable DTC inspection.
		No	DTC troubleshooting completed.

DTC P0751 [FS5A-EL]

E6U050200000W79

DTC P0751	Shift solenoid A stuck off
DETECTION CONDITION	• When P0731, P0732, and P0733 are not output, and all conditions below are satisfied. — Engine running — ATF temperature **20 °C {68 °F} or more** — Driving in 4GR at D or M range — Vehicle speed **36 km/h {22 mph} or more** — Turbine speed **within 225—4,987 rpm** — Secondary gear revolution speed **50 rpm or more** — Differential gear case (output) revolution speed **35 rpm or more** — Torque converter clutch (TCC) not operating — Revolution ratio of forward clutch drum revolution to secondary gear revolution **within 0.91—1.09** — None of the following DTCs are present: P0706, P0707, P0708, P0712, P0713, P0715, P0720, P0752, P0753, P0756, P0757, P0758, P0761, P0762, P0763, P0766, P0767, P0768, P0771, P0772, P0773, P0791 **Diagnostic support note:** • This is a continuous monitor (CCM). • The MIL illuminates if the TCM detects the above malfunction condition in two consecutive drive cycles or in one drive cycle while the DTC for the same malfunction has been stored in the TCM. • The PENDING CODE is available if the TCM detects the above malfunction condition during the first drive cycle. • FREEZE FRAME DATA is available. • The AT warning light illuminates. • The DTC is stored in the TCM memory.
POSSIBLE CAUSE	• ATF level low • Deteriorated ATF • Shift solenoid A stuck off • Control valve stuck • TCM malfunction

Diagnostic procedure

STEP	INSPECTION		ACTION
1	**VERIFY FREEZE FRAME DATA HAS BEEN RECORDED** • Has the FREEZE FRAME DATA been recorded?	Yes	Go to the next step.
		No	Record the FREEZE FRAME DATA on the repair order, then go to the next step.
2	**VERIFY RELATED REPAIR INFORMATION AVAILABILITY** • Verify related Service Bulletins and/or on-line repair information availability. • Is any related repair information available?	Yes	Perform repair or diagnosis according to the available repair information. • If the vehicle is not repaired, go to the next step.
		No	Go to the next step.
3	**INSPECT ATF CONDITION** • Turn the ignition switch to the LOCK position. • Inspect the ATF condition. — Clear red: Normal — Milky: Water mixed in fluid — Reddish brown: Deteriorated ATF • Is it normal? (See 05–17A–10 Automatic Transaxle Fluid (ATF) Condition Inspection.)	Yes	Go to the next step.
		No	If the ATF color is milky or reddish brown, replace ATF, then go to Step 5. (See 05–17A–12 AUTOMATIC TRANSAXLE FLUID (ATF) REPLACEMENT [FS5A-EL].)
4	**INSPECT ATF LEVEL** • Start the engine. • Warm up the ATX. • Is the ATF level within the specification? (See 05–17A–11 Automatic Transaxle Fluid (ATF) Level Inspection.)	Yes	Go to the next step.
		No	Add ATF to the specified level, then go to Step 7. (See 05–17A–11 Automatic Transaxle Fluid (ATF) Level Inspection.)
5	**INSPECT LINE PRESSURE** • Start the engine. • Measure the line pressures. (See 05–17A–5 Line Pressure Test.) • Are the line pressures within the specifications?	Yes	Go to the next step.
		No	• All ranges: Replace the oil pump or control valve body, then go to Step 7. • Any ranges: Replace the automatic transaxle, then go to Step 7. (See 05–17A–39 AUTOMATIC TRANSAXLE REMOVAL/INSTALLATION [FS5A-EL].) (See ATX Workshop Manual FS5A-EL.)
6	**INSPECT OPERATION OF EACH VALVE AND EACH SPRING** • Turn the ignition switch to the LOCK position. • Remove the primary control valve body. • Disassemble the primary control valve body. • Is each valve operation normal and is the return spring normal? (See 05–17A–46 PRIMARY CONTROL VALVE BODY REMOVAL [FS5A-EL].) (See 05–17A–47 PRIMARY CONTROL VALVE BODY INSTALLATION [FS5A-EL].) (See ATX Workshop Manual FS5A-EL.)	Yes	Replace the automatic transaxle, then go to the next step. (See 05–17A–39 AUTOMATIC TRANSAXLE REMOVAL/INSTALLATION [FS5A-EL].) (See ATX Workshop Manual FS5A-EL.)
		No	Repair or replace the shift valve and return spring, then go to the next step. (See 05–17A–46 PRIMARY CONTROL VALVE BODY REMOVAL [FS5A-EL].) (See 05–17A–47 PRIMARY CONTROL VALVE BODY INSTALLATION [FS5A-EL].) (See ATX Workshop Manual FS5A-EL.)
7	**VERIFY TROUBLESHOOTING OF DTC P0751 COMPLETED** • Make sure to reconnect all the disconnected connectors. • Clear the DTC from the memory using the WDS or equivalent. • Start the engine. • Warm up the ATX. • Drive the vehicle under the following conditions and make sure that gears shift smoothly from 1GR to 4GR. — ATF temperature (TFT PID): **20 °C {68 °F} or more** — Drive in the D range — Vehicle speed (VSS PID): **36 km/h {22 mph}** (4GR only) • Is the PENDING CODE present?	Yes	Replace the TCM, then go to the next step. (See 05–17A–38 TCM REMOVAL/INSTALLATION [FS5A-EL].)
		No	Go to the next step.
8	**VERIFY AFTER REPAIR PROCEDURE** • Perform the "After Repair Procedure". (See 05–02A–4 AFTER REPAIR PROCEDURE [FS5A-EL].) • Are any DTCs present?	Yes	Go to the applicable DTC inspection.
		No	DTC troubleshooting completed.

DTC P0752 [FS5A-EL]

E6U050200000W80

DTC P0752	Shift solenoid A stuck on
DETECTION CONDITION	• When P0734 is not output, and all conditions below are satisfied in 1GR and 2GR. — Engine running — ATF temperature **20 °C {68 °F} or more** — D range selected — Brake pedal depressed — Throttle opening angle at closed throttle position — Vehicle speed **0 km/h {0 mph}** — Input/turbine speed sensor signal **187.5 rpm or more.** — None of the following DTCs are present: P0706, P0707, P0708, P0712, P0713, P0715, P0720, P0751, P0753, P0756, P0757, P0758, P0761, P0762, P0763, P0766, P0767, P0768, P0771, P0772, P0773, P0791 **Diagnostic support note:** • This is a continuous monitor (CCM). • The MIL illuminates if the TCM detects the above malfunction condition in two consecutive drive cycles or in one drive cycle while the DTC for the same malfunction has been stored in the TCM. • The PENDING CODE is available if the TCM detects the above malfunction condition during the first drive cycle. • FREEZE FRAME DATA is available. • The AT warning light illuminates. • The DTC is stored in the TCM memory.
POSSIBLE CAUSE	• ATF level low • Deteriorated ATF • Shift solenoid A stuck on • Control valve stuck • TCM malfunction

Diagnostic procedure

STEP	INSPECTION		ACTION
1	**VERIFY FREEZE FRAME DATA HAS BEEN RECORDED** • Has the FREEZE FRAME DATA been recorded?	Yes	Go to the next step.
		No	Record the FREEZE FRAME DATA on the repair order, then go to the next step.
2	**VERIFY RELATED REPAIR INFORMATION AVAILABILITY** • Verify related Service Bulletins and/or on-line repair information availability. • Is any related repair information available?	Yes	Perform repair or diagnosis according to the available repair information. • If the vehicle is not repaired, go to the next step.
		No	Go to the next step.
3	**INSPECT ATF CONDITION** • Turn the ignition switch to the LOCK position. • Inspect the ATF condition. — Clear red: Normal — Milky: Water mixed in fluid — Reddish brown: Deteriorated ATF • Is it normal? (See 05–17A–10 Automatic Transaxle Fluid (ATF) Condition Inspection.)	Yes	Go to the next step.
		No	If the ATF color is milky or reddish brown, replace ATF, then go to Step 5. (See 05–17A–12 AUTOMATIC TRANSAXLE FLUID (ATF) REPLACEMENT [FS5A-EL].)
4	**INSPECT ATF LEVEL** • Start the engine. • Warm up the ATX. • Is the ATF level within the specification? (See 05–17A–11 Automatic Transaxle Fluid (ATF) Level Inspection.)	Yes	Go to the next step.
		No	Add ATF to the specified level, then go to Step 7. (See 05–17A–11 Automatic Transaxle Fluid (ATF) Level Inspection.)
5	**INSPECT LINE PRESSURE** • Start the engine. • Measure the line pressures. (See 05–17A–5 Line Pressure Test.) • Are the line pressures within the specifications?	Yes	Go to the next step.
		No	• All ranges: Replace the oil pump or control valve body, then go to Step 7. • Any ranges: Replace the automatic transaxle, then go to Step 7. (See 05–17A–39 AUTOMATIC TRANSAXLE REMOVAL/INSTALLATION [FS5A-EL].) (See ATX Workshop Manual FS5A-EL.)
6	**INSPECT OPERATION OF EACH VALVE AND EACH SPRING** • Turn the ignition switch to the LOCK position. • Remove the primary control valve body. • Disassemble the primary control valve body. • Is each valve operation normal and is the return spring normal? (See 05–17A–46 PRIMARY CONTROL VALVE BODY REMOVAL [FS5A-EL].) (See 05–17A–47 PRIMARY CONTROL VALVE BODY INSTALLATION [FS5A-EL].) (See ATX Workshop Manual FS5A-EL.)	Yes	Replace the automatic transaxle, then go to the next step. (See 05–17A–39 AUTOMATIC TRANSAXLE REMOVAL/INSTALLATION [FS5A-EL].) (See ATX Workshop Manual FS5A-EL.)
		No	Repair or replace the shift valve and return spring, then go to the next step. (See 05–17A–46 PRIMARY CONTROL VALVE BODY REMOVAL [FS5A-EL].) (See 05–17A–47 PRIMARY CONTROL VALVE BODY INSTALLATION [FS5A-EL].) (See ATX Workshop Manual FS5A-EL.)
7	**VERIFY TROUBLESHOOTING OF DTC P0752 COMPLETED** • Make sure to reconnect all the disconnected connectors. • Clear the DTC from the memory using the WDS or equivalent. • Start the engine. • Warm up the ATX. • Drive the vehicle under the following conditions and make sure that gears shift smoothly from 1GR to 4GR: — ATF temperature (TFT PID): **20 °C {68 °F} or more** — Drive in the D range • Is the PENDING CODE present?	Yes	Replace the TCM, then go to the next step. (See 05–17A–38 TCM REMOVAL/INSTALLATION [FS5A-EL].)
		No	Go to the next step.
8	**VERIFY AFTER REPAIR PROCEDURE** • Perform the "After Repair Procedure". (See 05–02A–4 AFTER REPAIR PROCEDURE [FS5A-EL].) • Are any DTCs present?	Yes	Go to the applicable DTC inspection.
		No	DTC troubleshooting completed.

DTC P0753 [FS5A-EL]

E6U050200000W81

DTC P0753	Shift solenoid A malfunction (electrical)
DETECTION CONDITION	• If TCM detects either of the following conditions, TCM determines that shift solenoid A circuit has a malfunction. — Shift solenoid A voltage stuck at **B+** after engine start — Shift solenoid A voltage stuck at **0 V** after engine start **Diagnostic support note:** • This is a continuous monitor (CCM). • The MIL illuminates if the TCM detects the above malfunction conditions during the first drive cycle. • The PENDING CODE is available if the TCM detects the above malfunction condition during the first drive cycle. • FREEZE FRAME DATA is available. • The AT warning light illuminates. • The DTC is stored in the TCM memory.
POSSIBLE CAUSE	• Shift solenoid A malfunction • Short to ground in wiring harness between transaxle connector (primary) terminal A and TCM terminal 1A • Short to power supply in wiring harness between transaxle connector (primary) terminal A and TCM terminal 1A • Open circuit in wiring harness between shift solenoid A terminal B and transaxle connector (primary) terminal A • Open circuit in wiring harness between transaxle connector (primary) terminal A and TCM terminal 1A • Open circuit in wiring harness between shift solenoid A terminal A and body ground • Damaged connector between shift solenoid A and TCM • TCM malfunction

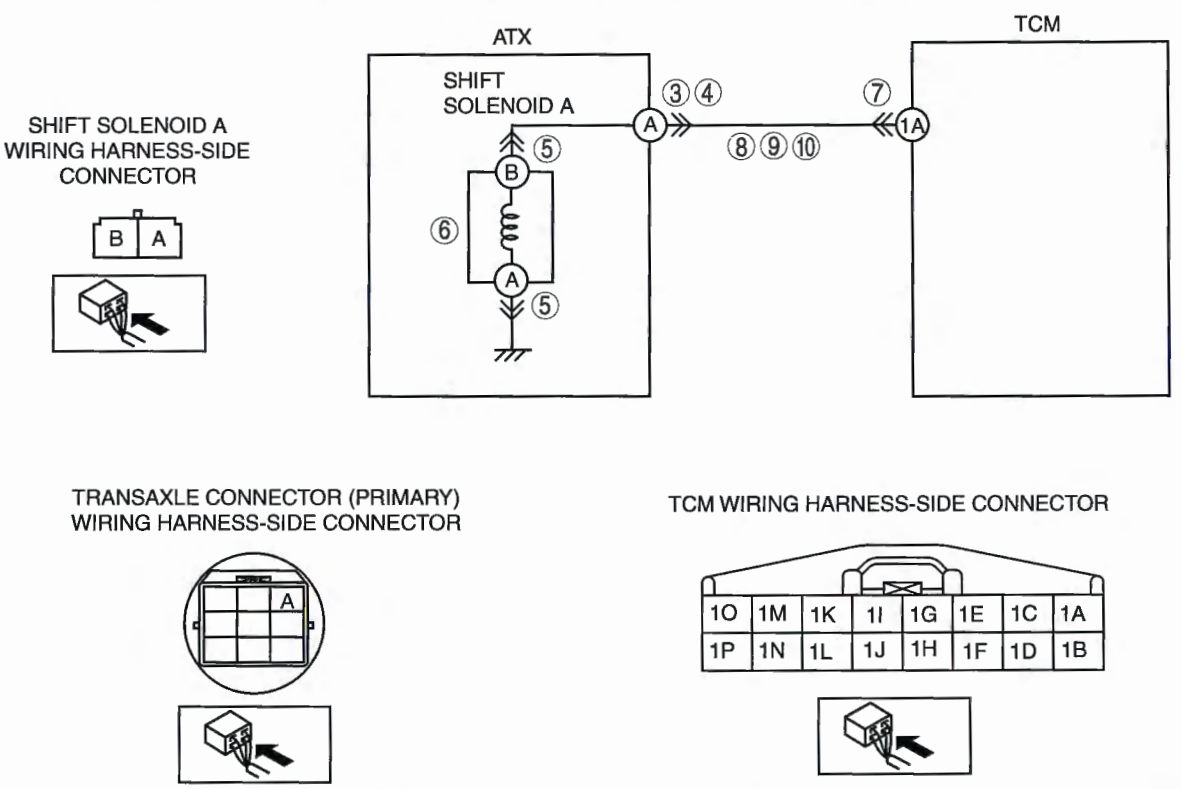

Diagnostic procedure

STEP	INSPECTION		ACTION
1	**VERIFY FREEZE FRAME DATA HAS BEEN RECORDED** • Has the FREEZE FRAME DATA been recorded?	Yes	Go to the next step.
		No	Record the FREEZE FRAME DATA on the repair order, then go to the next step.
2	**VERIFY RELATED REPAIR INFORMATION AVAILABILITY** • Verify related Service Bulletins and/or on-line repair information availability. • Is any related repair information available?	Yes	Perform repair or diagnosis according to the available repair information. • If the vehicle is not repaired, go to the next step.
		No	Go to the next step.

STEP	INSPECTION		ACTION
3	**INSPECT TRANSAXLE CONNECTOR FOR POOR CONNECTION** • Turn the ignition switch to the LOCK position. • Disconnect the transaxle connector (primary). • Inspect for poor connection (such as damaged/ pulled-out pins, corrosion). • Is the connection normal?	Yes	Go to the next step.
		No	Repair or replace the connector and/or terminals, then go to Step 11.
4	**INSPECT RESISTANCE** • Inspect the resistance between transaxle connector (primary) terminal A (transaxle case side) and body ground. • Is the resistance **within 1.0—4.2 ohms**? (See 05–17A–28 Resistance Inspection (On-Vehicle Inspection).)	Yes	Go to Step 7.
		No	Go to the next step.
5	**INSPECT SHIFT SOLENOID A CONNECTOR FOR POOR CONNECTION** • Disconnect the shift solenoid A connector. • Inspect for poor connection (such as damaged/ pulled-out pins, corrosion). • Is the connection normal?	Yes	Go to the next step.
		No	Repair or replace the connector and/or terminals, then go to Step 11.
6	**INSPECT RESISTANCE** • Inspect the resistance between shift solenoid A terminals A and B (part-side). • Is the resistance **within 1.0—4.2 ohms**? (See 05–17A–29 Resistance Inspection (Off-Vehicle Inspection).)	Yes	Replace the solenoid wiring harness, then go to Step 11.
		No	Verify shift solenoid A installation. • If solenoid installed correctly, replace the solenoid, then go to Step 11. (See 05–17A–30 SOLENOID VALVE REMOVAL/ INSTALLATION (PRIMARY CONTROL VALVE BODY) [FS5A-EL].)
7	**INSPECT TCM CONNECTOR FOR POOR CONNECTION** • Disconnect the TCM connector. • Inspect for poor connection (such as damaged/ pulled-out pins, corrosion). • Is the connection normal?	Yes	Go to the next step.
		No	Repair or replace the connector and/or terminals, then go to Step 11.
8	**INSPECT TRANSAXLE CONNECTOR CIRCUIT FOR OPEN CIRCUIT** • Inspect for continuity between TCM terminal 1A (wiring harness-side) and transaxle connector (primary) terminal A (wiring harness-side). • Is there continuity between terminals?	Yes	Go to the next step.
		No	Repair or replace the wiring harness, then go to Step 11.
9	**INSPECT TRANSAXLE CONNECTOR CIRCUIT FOR SHORT TO POWER SUPPLY** • Turn the ignition switch to the ON position (engine off). • Inspect the voltage at transaxle connector (primary) terminal A (wiring harness-side). • Is the voltage **0 V**?	Yes	Go to the next step.
		No	Repair or replace the wiring harness, then go to Step 11.
10	**INSPECT TCM CIRCUIT FOR SHORT TO GROUND** • Turn the ignition switch to the LOCK position. • Inspect for continuity between TCM terminal 1A (wiring harness-side) and body ground. • Is there continuity?	Yes	Repair or replace the wiring harness, then go to Step 11.
		No	Go to the next step.
11	**VERIFY TROUBLESHOOTING OF DTC P0753 COMPLETED** • Make sure to reconnect all the disconnected connectors. • Clear the DTC from the memory using the WDS or equivalent. • Drive the vehicle in D range and make sure that the gears shift smoothly from 1GR to 4GR. • Are any DTCs present?	Yes	Replace the TCM, then go to the next step. (See 05–17A–38 TCM REMOVAL/INSTALLATION [FS5A-EL].)
		No	No concern is detected. Go to the next step.
12	**VERIFY AFTER REPAIR PROCEDURE** • Perform the "After Repair Procedure". (See 05–02A–4 AFTER REPAIR PROCEDURE [FS5A-EL].) • Are any DTCs present?	Yes	Go to the applicable DTC inspection.
		No	DTC troubleshooting completed.

DTC P0756 [FS5A-EL]

E6U050200000W82

DTC P0756	Shift solenoid B stuck off
DETECTION CONDITION	• When DTC P0732, P0733, and P0734 are not output, and all conditions below are satisfied. — Engine running — ATF temperature **20 °C {68 °F} or more** — Driving in 1GR at D or M range — Turbine speed **within 225—4,987 rpm** — Secondary gear revolution speed **50 rpm or more** — Differential gear case (output) revolution speed **35 rpm or more** — Throttle opening angle (THOP PID) **4.14% or more** — Revolution ratio of forward clutch drum revolution to secondary gear revolution **2.157 or less** — None of the following DTCs are present: P0706, P0707, P0708, P0712, P0713, P0715, P0720, P0751, P0752, P0753, P0757, P0758, P0761, P0762, P0763, P0766, P0767, P0768, P0771, P0772, P0773, P0791 **Diagnostic support note:** • This is a continuous monitor (CCM). • The MIL illuminates if the TCM detects the above malfunction condition in two consecutive drive cycles or in one drive cycle while the DTC for the same malfunction has been stored in the TCM. • The PENDING CODE is available if the TCM detects the above malfunction condition during the first drive cycle. • FREEZE FRAME DATA is available. • The AT warning light illuminates. • The DTC is stored in the TCM memory.
POSSIBLE CAUSE	• ATF level low • Deteriorated ATF • Shift solenoid B stuck off • Control valve stuck • TCM malfunction

Diagnostic procedure

STEP	INSPECTION		ACTION
1	**VERIFY FREEZE FRAME DATA HAS BEEN RECORDED** • Has the FREEZE FRAME DATA been recorded?	Yes	Go to the next step.
		No	Record the FREEZE FRAME DATA on the repair order, then go to the next step.
2	**VERIFY RELATED REPAIR INFORMATION AVAILABILITY** • Verify related Service Bulletins and/or on-line repair information availability. • Is any related repair information available?	Yes	Perform repair or diagnosis according to the available repair information. • If the vehicle is not repaired, go to the next step.
		No	Go to the next step.
3	**INSPECT ATF CONDITION** • Turn the ignition switch to the LOCK position. • Inspect the ATF condition. — Clear red: Normal — Milky: Water mixed in fluid — Reddish brown: Deteriorated ATF • Is it normal? (See 05–17A–10 Automatic Transaxle Fluid (ATF) Condition Inspection.)	Yes	Go to the next step.
		No	If the ATF color is milky or reddish brown, replace ATF, then go to Step 5. (See 05–17A–12 AUTOMATIC TRANSAXLE FLUID (ATF) REPLACEMENT [FS5A-EL].)
4	**INSPECT ATF LEVEL** • Start the engine. • Warm up the ATX. • Is the ATF level within the specification? (See 05–17A–11 Automatic Transaxle Fluid (ATF) Level Inspection.)	Yes	Go to the next step.
		No	Add ATF to the specified level, then go to Step 7. (See 05–17A–11 Automatic Transaxle Fluid (ATF) Level Inspection.)
5	**INSPECT LINE PRESSURE** • Start the engine. • Measure the line pressures. (See 05–17A–5 Line Pressure Test.) • Are the line pressures within the specifications?	Yes	Go to the next step.
		No	• All ranges: Replace the oil pump or control valve body, then go to Step 7. • Any ranges: Replace the automatic transaxle, then go to Step 7. (See 05–17A–39 AUTOMATIC TRANSAXLE REMOVAL/INSTALLATION [FS5A-EL].) (See ATX Workshop Manual FS5A-EL.)
6	**INSPECT OPERATION OF EACH VALVE AND EACH SPRING** • Turn the ignition switch to the LOCK position. • Remove the primary control valve body. • Disassemble the primary control valve body. • Is each valve operation normal and is the return spring normal? (See 05–17A–46 PRIMARY CONTROL VALVE BODY REMOVAL [FS5A-EL].) (See 05–17A–47 PRIMARY CONTROL VALVE BODY INSTALLATION [FS5A-EL].) (See ATX Workshop Manual FS5A-EL.)	Yes	Replace the automatic transaxle, then go to the next step. (See 05–17A–39 AUTOMATIC TRANSAXLE REMOVAL/INSTALLATION [FS5A-EL].) (See ATX Workshop Manual FS5A-EL.)
		No	Repair or replace the shift valve and return spring, then go to the next step. (See 05–17A–46 PRIMARY CONTROL VALVE BODY REMOVAL [FS5A-EL].) (See 05–17A–47 PRIMARY CONTROL VALVE BODY INSTALLATION [FS5A-EL].) (See ATX Workshop Manual FS5A-EL.)
7	**VERIFY TROUBLESHOOTING OF DTC P0756 COMPLETED** • Make sure to reconnect all the disconnected connectors. • Clear the DTC from the memory using the WDS or equivalent. • Start the engine. • Warm up the ATX. • Drive the vehicle under the following conditions and make sure that gears shift smoothly from 1GR to 4GR: — ATF temperature (TFT PID): **20 °C {68 °F} or more** — Drive in the D range — Engine speed (RPM PID): **450 rpm or more** — Throttle opening angle (THOP PID): **4.14% or more** • Is the PENDING CODE present?	Yes	Replace the TCM, then go to the next step. (See 05–17A–38 TCM REMOVAL/INSTALLATION [FS5A-EL].)
		No	Go to the next step.
8	**VERIFY AFTER REPAIR PROCEDURE** • Perform the "After Repair Procedure". (See 05–02A–4 AFTER REPAIR PROCEDURE [FS5A-EL].) • Are any DTCs present?	Yes	Go to the applicable DTC inspection.
		No	DTC troubleshooting completed.

DTC P0757 [FS5A-EL]

E6U050200000W83

DTC P0757	Shift solenoid B stuck on
DETECTION CONDITION	• When DTC P0731 and P0733 are not output, and both the following conditions are satisfied. — When all conditions below are satisfied while driving in 2GR • Engine running • ATF temperature **20 °C {68 °F} or more** • Driving in D or M range • Turbine speed **within 225—4,987 rpm** • Secondary gear revolution speed **50 rpm or more** • Differential gear case (output) revolution speed **35 rpm or more** • Revolution ratio of forward clutch drum revolution to secondary gear revolution **1.249 or less** or **2.157 or more** • None of the following DTCs are present: P0706, P0707, P0708, P0712, P0713, P0715, P0720, P0751, P0752, P0753, P0756, P0758, P0761, P0762, P0763, P0766, P0767, P0768, P0771, P0772, P0773, P0791 — When all conditions below are satisfied with driving in 4GR • Engine running • ATF temperature **20 °C {68 °F} or more** • Driving in D or M range • Turbine speed **within 225—4,987 rpm** • Secondary gear revolution speed **50 rpm or more** • Differential gear case (output) revolution speed **35 rpm or more** • Vehicle speed **28 km/h {17 mph}** • Throttle opening angle at closed throttle position • Revolution ratio of forward clutch drum revolution to secondary gear revolution **0.6 or less** or **1.249 or more** • None of the following DTCs are present: P0706, P0707, P0708, P0712, P0713, P0715, P0720, P0751, P0752, P0753, P0756, P0758, P0761, P0762, P0763, P0766, P0767, P0768, P0771, P0772, P0773, P0791 **Diagnostic support note:** • This is a continuous monitor (CCM). • The MIL illuminates if the TCM detects the above malfunction condition in two consecutive drive cycles or in one drive cycle while the DTC for the same malfunction has been stored in the TCM. • The PENDING CODE is available if the TCM detects the above malfunction condition during the first dri cycle. • FREEZE FRAME DATA is available. • The AT warning light illuminates. • The DTC is stored in the TCM memory.
POSSIBLE CAUSE	• ATF level low • Deteriorated ATF • Shift solenoid B stuck on • Control valve stuck • TCM malfunction

Diagnostic procedure

STEP	INSPECTION		ACTION
1	**VERIFY FREEZE FRAME DATA HAS BEEN RECORDED** • Has the FREEZE FRAME DATA been recorded?	Yes	Go to the next step.
		No	Record the FREEZE FRAME DATA on the repair order, then go to the next step.
2	**VERIFY RELATED REPAIR INFORMATION AVAILABILITY** • Verify related Service Bulletins and/or on-line repair information availability. • Is any related repair information available?	Yes	Perform repair or diagnosis according to the available repair information. • If the vehicle is not repaired, go to the next step.
		No	Go to the next step.
3	**INSPECT ATF CONDITION** • Turn the ignition switch to the LOCK position. • Inspect the ATF condition. — Clear red: Normal — Milky: Water mixed in fluid — Reddish brown: Deteriorated ATF • Is it normal? (See 05–17A–10 Automatic Transaxle Fluid (ATF) Condition Inspection.)	Yes	Go to the next step.
		No	If the ATF color is milky or reddish brown, replace ATF, then go to Step 5. (See 05–17A–12 AUTOMATIC TRANSAXLE FLUID (ATF) REPLACEMENT [FS5A-EL].)
4	**INSPECT ATF LEVEL** • Start the engine. • Warm up the ATX. • Is the ATF level within the specification? (See 05–17A–11 Automatic Transaxle Fluid (ATF) Level Inspection.)	Yes	Go to the next step.
		No	Add ATF to the specified level, then go to Step 7. (See 05–17A–11 Automatic Transaxle Fluid (ATF) Level Inspection.)
5	**INSPECT LINE PRESSURE** • Start the engine. • Measure the line pressures. (See 05–17A–5 Line Pressure Test.) • Are the line pressures within the specifications?	Yes	Go to the next step.
		No	• All ranges: Replace the oil pump or control valve body, then go to Step 7. • Any ranges: Replace the automatic transaxle, then go to Step 7. (See 05–17A–39 AUTOMATIC TRANSAXLE REMOVAL/INSTALLATION [FS5A-EL].) (See ATX Workshop Manual FS5A-EL.)
6	**INSPECT OPERATION OF EACH VALVE AND EACH SPRING** • Turn the ignition switch to the LOCK position. • Remove the primary control valve body. • Disassemble the primary control valve body. • Is each valve operation normal and is the return spring normal? (See 05–17A–46 PRIMARY CONTROL VALVE BODY REMOVAL [FS5A-EL].) (See 05–17A–47 PRIMARY CONTROL VALVE BODY INSTALLATION [FS5A-EL].) (See ATX Workshop Manual FS5A-EL.)	Yes	Replace the automatic transaxle, then go to the next step. (See 05–17A–39 AUTOMATIC TRANSAXLE REMOVAL/INSTALLATION [FS5A-EL].) (See ATX Workshop Manual FS5A-EL.)
		No	Repair or replace the shift valve and return spring, then go to the next step. (See 05–17A–46 PRIMARY CONTROL VALVE BODY REMOVAL [FS5A-EL].) (See 05–17A–47 PRIMARY CONTROL VALVE BODY INSTALLATION [FS5A-EL].) (See ATX Workshop Manual FS5A-EL.)
7	**VERIFY TROUBLESHOOTING OF DTC P0757 COMPLETED** • Make sure to reconnect all the disconnected connectors. • Clear the DTC from the memory using the WDS or equivalent. • Start the engine. • Warm up the ATX. • Drive the vehicle under the following conditions make sure that gears shift smoothly from 1GR to 4GR. — ATF temperature (TFT PID): **20 °C {68 °F} or more** — Drive in the D range — Engine speed (RPM PID): **450 rpm or more** — Throttle opening angle (THOP PID): **0%** (4GR only) — Vehicle speed (VSS PID): **28 km/h {17 mph}** (4GR only) • Is the PENDING CODE present?	Yes	Replace the TCM, then go to the next step. (See 05–17A–38 TCM REMOVAL/INSTALLATION [FS5A-EL].)
		No	Go to the next step.
8	**VERIFY AFTER REPAIR PROCEDURE** • Perform the "After Repair Procedure". (See 05–02A–4 AFTER REPAIR PROCEDURE [FS5A-EL].) • Are any DTCs present?	Yes	Go to the applicable DTC inspection.
		No	DTC troubleshooting completed.

DTC P0758 [FS5A-EL]

E6U050200000W84

DTC P0758	Shift solenoid B malfunction (electrical)
DETECTION CONDITION	• If the TCM detects either of the following conditions, the TCM determines that shift solenoid B circuit has malfunction. — Shift solenoid B voltage stuck at **B+** after engine start — Shift solenoid B voltage stuck at **0 V** after engine start **Diagnostic support note:** • This is a continuous monitor (CCM). • The MIL illuminates if the TCM detects the above malfunction conditions during the first drive cycle. • The PENDING CODE is available if the TCM detects the above malfunction condition during the first drive cycle. • FREEZE FRAME DATA is available. • The AT warning light illuminates. • The DTC is stored in the TCM memory.
POSSIBLE CAUSE	• Shift solenoid B malfunction • Short to ground in wiring harness between transaxle connector (primary) terminal C and TCM terminal 1B • Short to power supply in wiring harness between transaxle connector (primary) terminal C and TCM terminal 1B • Open circuit in wiring harness between shift solenoid B terminal B and transaxle connector (primary) terminal C • Open circuit in wiring harness between transaxle connector (primary) terminal C and TCM terminal 1B • Open circuit in wiring harness between shift solenoid B terminal A and body ground • Damaged connector between shift solenoid B and TCM • TCM malfunction

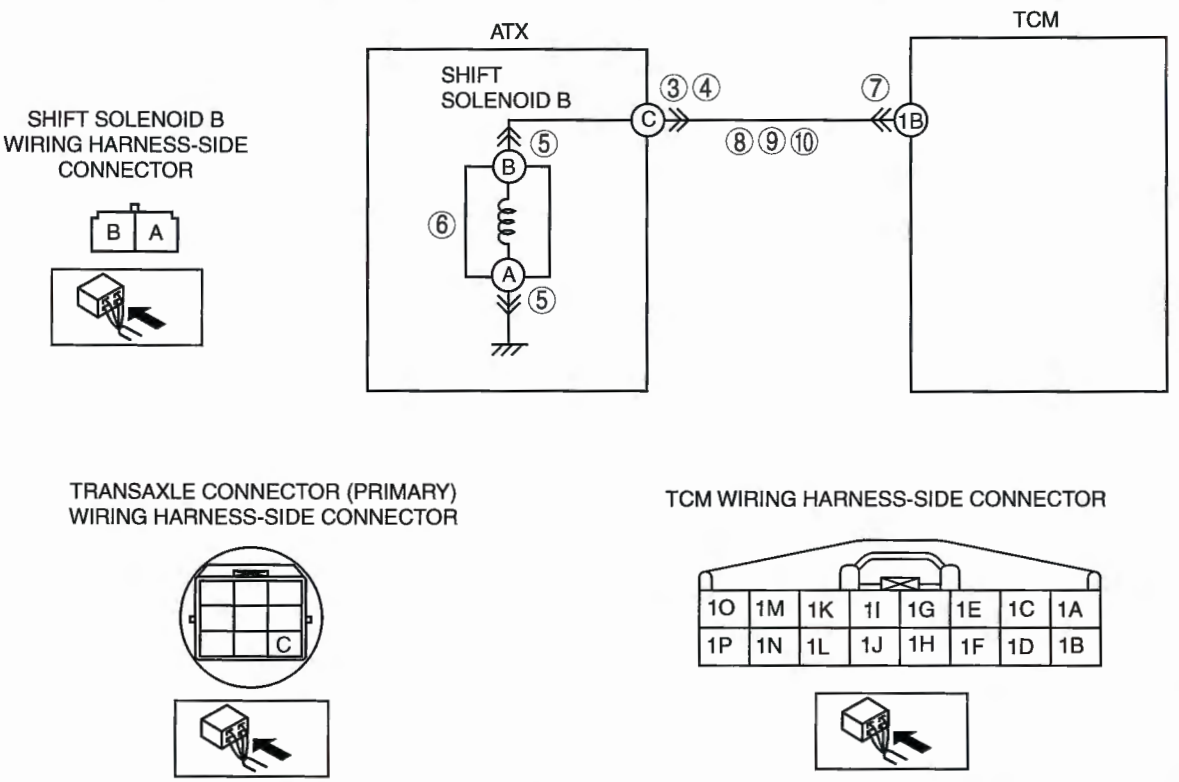

Diagnostic procedure

STEP	INSPECTION		ACTION
1	**VERIFY FREEZE FRAME DATA HAS BEEN RECORDED** • Has the FREEZE FRAME DATA been recorded?	Yes	Go to the next step.
		No	Record the FREEZE FRAME DATA on the repair order, then go to the next step.
2	**VERIFY RELATED REPAIR INFORMATION AVAILABILITY** • Verify related Service Bulletins and/or on-line repair information availability. • Is any related repair information available?	Yes	Perform repair or diagnosis according to the available repair information. • If the vehicle is not repaired, go to the next step.
		No	Go to the next step.

STEP	INSPECTION		ACTION
3	**INSPECT TRANSAXLE CONNECTOR FOR POOR CONNECTION** • Turn the ignition switch to the LOCK position. • Disconnect the transaxle connector (primary). • Inspect for poor connection (such as damaged/ pulled-out pins, corrosion). • Is the connection normal?	Yes	Go to the next step.
		No	Repair or replace the connector and/or terminals, then go to Step 11.
4	**INSPECT RESISTANCE** • Inspect the resistance between transaxle connector (primary) terminal C (transaxle case side) and body ground. • Is the resistance **within 1.0—4.2 ohms**? (See 05–17A–28 Resistance Inspection (On-Vehicle Inspection).)	Yes	Go to Step 7.
		No	Go to the next step.
5	**INSPECT SHIFT SOLENOID B CONNECTOR FOR POOR CONNECTION** • Disconnect the shift solenoid B connector. • Inspect for poor connection (such as damaged/ pulled-out pins, corrosion). • Is the connection normal?	Yes	Go to the next step.
		No	Repair or replace the connector and/or terminals, then go to Step 11.
6	**INSPECT RESISTANCE** • Inspect the resistance between shift solenoid B terminals A and B (part-side). • Is the resistance **within 1.0—4.2 ohms**? (See 05–17A–29 Resistance Inspection (Off-Vehicle Inspection).)	Yes	Replace the solenoid wiring harness, then go to Step 11.
		No	Verify shift solenoid B installation. • If solenoid installed correctly, replace the solenoid, then go to Step 11. (See 05–17A–30 SOLENOID VALVE REMOVAL/ INSTALLATION (PRIMARY CONTROL VALVE BODY) [FS5A-EL].)
7	**INSPECT TCM CONNECTOR FOR POOR CONNECTION** • Disconnect the TCM connector. • Inspect for poor connection (such as damaged/ pulled-out pins, corrosion). • Is the connection normal?	Yes	Go to the next step.
		No	Repair or replace the connector and/or terminals, then go to Step 11.
8	**INSPECT TRANSAXLE CONNECTOR CIRCUIT FOR OPEN CIRCUIT** • Inspect for continuity between TCM terminal 1B (wiring harness-side) and transaxle connector (primary) terminal C (wiring harness-side). • Is there continuity between terminals?	Yes	Go to the next step.
		No	Repair or replace the wiring harness, then go to Step 11.
9	**INSPECT TRANSAXLE CONNECTOR CIRCUIT FOR SHORT TO POWER SUPPLY** • Turn the ignition switch to the ON position (engine off). • Inspect for voltage at transaxle connector (primary) terminal C (wiring harness-side). • Is the voltage **0 V**?	Yes	Go to the next step.
		No	Repair or replace the wiring harness, then go to Step 11.
10	**INSPECT TCM CIRCUIT FOR SHORT TO GROUND** • Turn the ignition switch to the LOCK position. • Inspect for continuity between TCM terminal 1B (wiring harness-side) and body ground. • Is there continuity?	Yes	Repair or replace the wiring harness, then go to Step 11.
		No	Go to the next step.
11	**VERIFY TROUBLESHOOTING OF DTC P0758 SHIFT SOLENOID B COMPLETED** • Make sure to reconnect all the disconnected connectors. • Clear the DTC from the memory using the WDS or equivalent. • Drive the vehicle in D range and make sure that the gears shift smoothly from 1GR to 4GR. • Are any DTCs present?	Yes	Replace the TCM, then go to the next step. (See 05–17A–38 TCM REMOVAL/INSTALLATION [FS5A-EL].)
		No	Go to the next step.
12	**VERIFY AFTER REPAIR PROCEDURE** • Perform the "After Repair Procedure". (See 05–02A–4 AFTER REPAIR PROCEDURE [FS5A-EL].) • Are any DTCs present?	Yes	Go to the applicable DTC inspection.
		No	DTC troubleshooting completed.

DTC P0761 [FS5A-EL]

E6U050200000W85

DTC P0761	Shift solenoid C stuck off
DETECTION CONDITION	• When DTC P0733 and P0734 are not output, and both the following conditions are satisfied. — When all conditions below are satisfied while driving in 1GR • Engine running • ATF temperature **20 °C {68 °F} or more** • Driving in D or M range • Turbine speed **within 225—4,987 rpm** • Secondary gear revolution speed **50 rpm or more** • Throttle opening angle (THOP PID) **4.14% or more** • Differential gear case (output) revolution speed **35 rpm or more** • Revolution ratio of forward clutch drum revolution to secondary gear revolution **2.157 or less** • None of the following DTCs are present: P0706, P0707, P0708, P0712, P0713, P0715, P0720, P0751, P0752, P0753, P0756, P0757, P0758, P0761, P0762, P0763, P0766, P0767, P0768, P0771, P0772, P0773, P0791 — When all conditions below are satisfied while driving in 2GR • ATF temperature **20 °C {68 °F} or more** • Driving in D or M range • Engine running • Turbine speed **within 225—4,987 rpm** • Secondary gear revolution speed **50 rpm or more** • Differential gear case (output) revolution speed **35 rpm or more** • Revolution ratio of forward clutch drum revolution to secondary gear revolution **1.249 or less** or **2.157 or more** • None of the following DTCs are present: P0706, P0707, P0708, P0712, P0713, P0715, P0720, P0751, P0752, P0753, P0756, P0757, P0758, P0761, P0762, P0763, P0766, P0767, P0768, P0771, P0772, P0773, P0791 **Diagnostic support note:** • This is a continuous monitor (CCM). • The MIL illuminates if the TCM detects the above malfunction condition in two consecutive drive cycles or in one drive cycle while the DTC for the same malfunction has been stored in the TCM. • The PENDING CODE is available if the TCM detects the above malfunction condition during the first drive cycle. • FREEZE FRAME DATA is available. • The AT warning light illuminates. • The DTC is stored in the TCM memory.
POSSIBLE CAUSE	• ATF level low • Deteriorated ATF • Shift solenoid C stuck off • Control valve stuck • TCM malfunction

Diagnostic procedure

STEP	INSPECTION		ACTION
1	**VERIFY FREEZE FRAME DATA HAS BEEN RECORDED** • Has the FREEZE FRAME DATA been recorded?	Yes	Go to the next step.
		No	Record the FREEZE FRAME DATA on the repair order, then go to the next step.
2	**VERIFY RELATED REPAIR INFORMATION AVAILABILITY** • Verify related Service Bulletins and/or on-line repair information availability. • Is any related repair information available?	Yes	Perform repair or diagnosis according to the available repair information. • If the vehicle is not repaired, go to the next step.
		No	Go to the next step.
3	**INSPECT ATF CONDITION** • Turn the ignition switch to the LOCK position. • Inspect the ATF condition. — Clear red: Normal — Milky: Water mixed in fluid — Reddish brown: Deteriorated ATF • Is it normal? (See 05–17A–10 Automatic Transaxle Fluid (ATF) Condition Inspection.)	Yes	Go to the next step.
		No	If the ATF color is milky or reddish brown, replace ATF, then go to Step 5. (See 05–17A–12 AUTOMATIC TRANSAXLE FLUID (ATF) REPLACEMENT [FS5A-EL].)
4	**INSPECT ATF LEVEL** • Start the engine. • Warm up the ATX. • Is the ATF level within the specification? (See 05–17A–11 Automatic Transaxle Fluid (ATF) Level Inspection.)	Yes	Go to the next step.
		No	Add ATF to the specified level, then go to Step 7. (See 05–17A–11 Automatic Transaxle Fluid (ATF) Level Inspection.)
5	**INSPECT LINE PRESSURE** • Start the engine. • Measure the line pressures. (See 05–17A–5 Line Pressure Test.) • Are the line pressures within the specifications?	Yes	Go to the next step.
		No	• All ranges: Replace the oil pump or control valve body, then go to Step 7. • Any ranges: Replace the automatic transaxle, then go to Step 7. (See 05–17A–39 AUTOMATIC TRANSAXLE REMOVAL/INSTALLATION [FS5A-EL].) (See ATX Workshop Manual FS5A-EL.)
6	**INSPECT OPERATION OF EACH VALVE AND EACH SPRING** • Turn the ignition switch to the LOCK position. • Remove the primary control valve body. • Disassemble the primary control valve body. • Is each valve operation normal and is the return spring normal? (See 05–17A–46 PRIMARY CONTROL VALVE BODY REMOVAL [FS5A-EL].) (See 05–17A–47 PRIMARY CONTROL VALVE BODY INSTALLATION [FS5A-EL].) (See ATX Workshop Manual FS5A-EL.)	Yes	Replace the automatic transaxle, then go to the next step. (See 05–17A–39 AUTOMATIC TRANSAXLE REMOVAL/INSTALLATION [FS5A-EL].) (See ATX Workshop Manual FS5A-EL.)
		No	Repair or replace the shift valve and return spring, then go to the next step. (See 05–17A–46 PRIMARY CONTROL VALVE BODY REMOVAL [FS5A-EL].) (See 05–17A–47 PRIMARY CONTROL VALVE BODY INSTALLATION [FS5A-EL].) (See ATX Workshop Manual FS5A-EL.)
7	**VERIFY TROUBLESHOOTING OF DTC P0761 COMPLETED** • Make sure to reconnect all the disconnected connectors. • Clear the DTC from the memory using the WDS or equivalent. • Start the engine. • Warm up the ATX. • Drive the vehicle under the following conditions and make sure that the gears shift smoothly from 1GR to 4GR. — ATF temperature (TFT PID): **20 °C {68 °F} or more** — Drive in the D range — Throttle opening angle (THOP PID): **4.14% or more** • Is the PENDING CODE present?	Yes	Replace the TCM, then go to the next step. (See 05–17A–38 TCM REMOVAL/INSTALLATION [FS5A-EL].)
		No	Go to the next step.
8	**VERIFY AFTER REPAIR PROCEDURE** • Perform the "After Repair Procedure". (See 05–02A–4 AFTER REPAIR PROCEDURE [FS5A-EL].) • Are any DTCs present?	Yes	Go to the applicable DTC inspection.
		No	DTC troubleshooting completed.

DTC P0762 [FS5A-EL]

E6U050200000W86

DTC P0762	Shift solenoid C stuck on
DETECTION CONDITION	• When DTC P0731 and P0732 are not output, and both the following conditions are satisfied. — When all conditions below are satisfied while driving in 3GR. • Engine running • ATF temperature **20 °C {68 °F} or more.** • Driving in D or M range • Vehicle speed **26 km/h {16 mph} or more** • Turbine speed **within 225—4,987 rpm** • Secondary gear revolution speed **50 rpm or more** • Torque converter clutch (TCC) not operating • Differential gear case (output) revolution speed **35 rpm or more** • Revolution ratio of forward clutch drum revolution to secondary gear revolution **within 1.345—1.644** • None of the following DTCs are present: P0706, P0707, P0708, P0712, P0713, P0715, P0720, P0751, P0752, P0753, P0756, P0757, P0758, P0761, P0763, P0766, P0767, P0768, P0771, P0772, P0773, P0791 **Diagnostic support note:** • This is a continuous monitor (CCM). • The MIL illuminates if the TCM detects the above malfunction condition in two consecutive drive cycles or in one drive cycle while the DTC for the same malfunction has been stored in the TCM. • The PENDING CODE is available if the TCM detects the above malfunction condition during the first drive cycle. • FREEZE FRAME DATA is available. • The AT warning light illuminates. • The DTC is stored in the TCM memory.
POSSIBLE CAUSE	• ATF level low • Deteriorated ATF • Shift solenoid C stuck on • Control valve stuck • TCM malfunction

Diagnostic procedure

STEP	INSPECTION		ACTION
1	**VERIFY FREEZE FRAME DATA HAS BEEN RECORDED** • Has the FREEZE FRAME DATA been recorded?	Yes	Go to the next step.
		No	Record the FREEZE FRAME DATA on the repair order, then go to the next step.
2	**VERIFY RELATED REPAIR INFORMATION AVAILABILITY** • Verify related Service Bulletins and/or on-line repair information availability. • Is any related repair information available?	Yes	Perform repair or diagnosis according to the available repair information. • If the vehicle is not repaired, go to the next step.
		No	Go to the next step.
3	**INSPECT ATF CONDITION** • Turn the ignition switch to the LOCK position. • Inspect the ATF condition. — Clear red: Normal — Milky: Water mixed in fluid — Reddish brown: Deteriorated ATF • Is it normal? (See 05–17A–10 Automatic Transaxle Fluid (ATF) Condition Inspection.)	Yes	Go to the next step.
		No	If the ATF color is milky or reddish brown, replace ATF, then go to Step 5. (See 05–17A–12 AUTOMATIC TRANSAXLE FLUID (ATF) REPLACEMENT [FS5A-EL].)
4	**INSPECT ATF LEVEL** • Start the engine. • Warm up the ATX. • Is the ATF level within the specification? (See 05–17A–11 Automatic Transaxle Fluid (ATF) Level Inspection.)	Yes	Go to the next step.
		No	Add ATF to the specified level, then go to Step 7. (See 05–17A–11 Automatic Transaxle Fluid (ATF) Level Inspection.)
5	**INSPECT LINE PRESSURE** • Start the engine. • Measure the line pressures. (See 05–17A–5 Line Pressure Test.) • Are the line pressures within the specifications?	Yes	Go to the next step.
		No	• All ranges: Replace the oil pump or control valve body, then go to Step 7. • Any ranges: Replace the automatic transaxle, then go to Step 7. (See 05–17A–39 AUTOMATIC TRANSAXLE REMOVAL/INSTALLATION [FS5A-EL].) (See ATX Workshop Manual FS5A-EL.)
6	**INSPECT OPERATION OF EACH VALVE AND EACH SPRING** • Turn the ignition switch to the LOCK position. • Remove the primary control valve body. • Disassemble the primary control valve body. • Is each valve operation normal and is the return spring normal? (See 05–17A–46 PRIMARY CONTROL VALVE BODY REMOVAL [FS5A-EL].) (See 05–17A–47 PRIMARY CONTROL VALVE BODY INSTALLATION [FS5A-EL].) (See ATX Workshop Manual FS5A-EL.)	Yes	Replace the automatic transaxle, then go to the next step. (See 05–17A–39 AUTOMATIC TRANSAXLE REMOVAL/INSTALLATION [FS5A-EL].) (See ATX Workshop Manual FS5A-EL.)
		No	Repair or replace the shift valve and return spring, then go to the next step. (See 05–17A–46 PRIMARY CONTROL VALVE BODY REMOVAL [FS5A-EL].) (See 05–17A–47 PRIMARY CONTROL VALVE BODY INSTALLATION [FS5A-EL].) (See ATX Workshop Manual FS5A-EL.)
7	**VERIFY TROUBLESHOOTING OF DTC P0762 COMPLETED** • Make sure to reconnect all the disconnected connectors. • Clear the DTC from the memory using the WDS or equivalent. • Start the engine. • Warm up the ATX. • Drive the vehicle under the following conditions and make sure that gears shift smoothly from 1GR to 4GR: — ATF temperature (TFT PID): **20 °C {68 °F} or more** — Drive in the D range — Vehicle speed (VSS PID): **26 km/h {16 mph} or more** • Is the PENDING CODE present?	Yes	Replace the TCM, then go to the next step. (See 05–17A–38 TCM REMOVAL/INSTALLATION [FS5A-EL].)
		No	Go to the next step.
8	**VERIFY AFTER REPAIR PROCEDURE** • Perform the "After Repair Procedure". (See 05–02A–4 AFTER REPAIR PROCEDURE [FS5A-EL].) • Are any DTCs present?	Yes	Go to the applicable DTC inspection.
		No	DTC troubleshooting completed.

DTC P0763 [FS5A-EL]

E6U050200000W87

DTC P0763	Shift solenoid C malfunction (electrical)
DETECTION CONDITION	• If the TCM detects either of the following conditions, the TCM determines that shift solenoid C circuit has malfunction. — Shift solenoid C voltage stuck at **B+** after engine start — Shift solenoid C voltage stuck at **0 V** after engine start **Diagnostic support note:** • This is a continuous monitor (CCM). • The MIL illuminates if the TCM detects the above malfunction conditions during the first drive cycle. • The PENDING CODE is available if the TCM detects the above malfunction condition during the first drive cycle. • FREEZE FRAME DATA is available. • The AT warning light illuminates. • The DTC is stored in the TCM memory.
POSSIBLE CAUSE	• Shift solenoid C malfunction • Short to ground in wiring harness between transaxle connector (primary) terminal G and TCM terminal 1C • Short to power supply in wiring harness between transaxle connector (primary) terminal G and TCM terminal 1C • Open circuit in wiring harness between shift solenoid C terminal B and transaxle connector (primary) terminal G • Open circuit in wiring harness between transaxle connector (primary) terminal G and TCM terminal 1C • Open circuit in wiring harness between shift solenoid C terminal A and body ground • Damaged connector between shift solenoid C and TCM • TCM malfunction

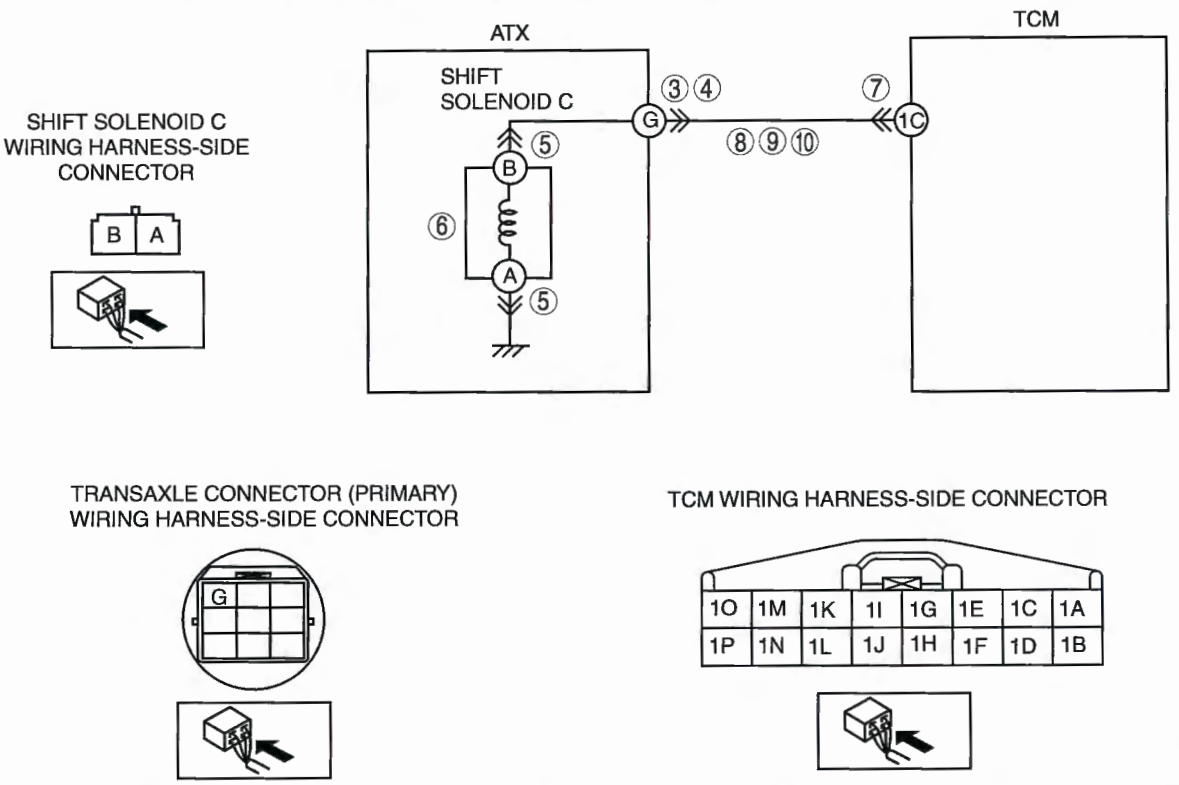

Diagnostic procedure

STEP	INSPECTION		ACTION
1	**VERIFY FREEZE FRAME DATA HAS BEEN RECORDED** • Has the FREEZE FRAME DATA been recorded?	Yes	Go to the next step.
		No	Record the FREEZE FRAME DATA on the repair order, then go to the next step.
2	**VERIFY RELATED REPAIR INFORMATION AVAILABILITY** • Verify related Service Bulletins and/or on-line repair information availability. • Is any related repair information available?	Yes	Perform repair or diagnosis according to the available repair information. • If the vehicle is not repaired, go to the next step.
		No	Go to the next step.

STEP	INSPECTION		ACTION
3	**INSPECT TRANSAXLE CONNECTOR FOR POOR CONNECTION** • Turn the ignition switch to the LOCK position. • Disconnect the transaxle connector (primary). • Inspect for poor connection (such as damaged/ pulled-out pins, corrosion). • Is the connection normal?	Yes	Go to the next step.
		No	Repair or replace the connector and/or terminals, then go to Step 11.
4	**INSPECT RESISTANCE** • Inspect the resistance between transaxle connector (primary) terminal G (transaxle case side) and body ground. • Is the resistance **within 1.0—4.2 ohms**? (See 05–17A–28 Resistance Inspection (On-Vehicle Inspection).)	Yes	Go to Step 7.
		No	Go to the next step.
5	**INSPECT SHIFT SOLENOID C CONNECTOR FOR POOR CONNECTION** • Disconnect the shift solenoid C connector. • Inspect for poor connection (such as damaged/ pulled-out pins, corrosion). • Is the connection normal?	Yes	Go to the next step.
		No	Repair or replace the connector and/or terminals, then go to Step 11.
6	**INSPECT RESISTANCE** • Inspect the resistance between shift solenoid C terminals A and B (part-side). • Is the resistance **within 1.0—4.2 ohms**? (See 05–17A–29 Resistance Inspection (Off-Vehicle Inspection).)	Yes	Replace the solenoid wiring harness, then go to Step 11.
		No	Verify shift solenoid C installation. • If solenoid installed correctly, replace the solenoid, then go to Step 11. (See 05–17A–30 SOLENOID VALVE REMOVAL/ INSTALLATION (PRIMARY CONTROL VALVE BODY) [FS5A-EL].)
7	**INSPECT TCM CONNECTOR FOR POOR CONNECTION** • Disconnect the TCM connector. • Inspect for poor connection (such as damaged/ pulled-out pins, corrosion). • Is the connection normal?	Yes	Go to the next step.
		No	Repair or replace the connector and/or terminals, then go to Step 11.
8	**INSPECT TRANSAXLE CONNECTOR CIRCUIT FOR OPEN CIRCUIT** • Inspect for continuity between TCM terminal 1C (wiring harness-side) and transaxle connector (primary) terminal G (wiring harness-side). • Is there continuity between terminals?	Yes	Go to the next step.
		No	Repair or replace the wiring harness, then go to Step 11.
9	**INSPECT TRANSAXLE CONNECTOR CIRCUIT FOR SHORT TO POWER SUPPLY** • Turn the ignition switch to the ON position (engine off). • Inspect the voltage at transaxle connector (primary) terminal G (wiring harness-side). • Is the voltage **0 V**?	Yes	Go to the next step.
		No	Repair or replace the wiring harness, then go to Step 11.
10	**INSPECT TCM CIRCUIT FOR SHORT TO GROUND** • Turn the ignition switch to the LOCK position. • Inspect for continuity between TCM terminal 1C (wiring harness-side) and body ground. • Is there continuity?	Yes	Repair or replace the wiring harness, then go to Step 11.
		No	Go to the next step.
11	**VERIFY TROUBLESHOOTING OF DTC P0763 COMPLETED** • Make sure to reconnect all the disconnected connectors. • Clear the DTC from the memory using the WDS or equivalent. • Drive the vehicle in D range and make sure that gears shift smoothly from 1GR to 4GR. • Are any DTCs present?	Yes	Replace the TCM, then go to the next step. (See 05–17A–38 TCM REMOVAL/INSTALLATION [FS5A-EL].)
		No	No concern is detected. Go to the next step.
12	**VERIFY AFTER REPAIR PROCEDURE** • Perform the "After Repair Procedure". (See 05–02A–4 AFTER REPAIR PROCEDURE [FS5A-EL].) • Are any DTCs present?	Yes	Go to the applicable DTC inspection.
		No	DTC troubleshooting completed.

DTC P0766 [FS5A-EL]

E6U050200000W88

DTC P0766	Shift solenoid D stuck off
DETECTION CONDITION	• When any of DTC P0732, and P0733 not output (correct judgment), and all conditions below are satisfied — Is DTC P0731 not output while driving in 1GR at D range — Engine running — ATF temperature **20 °C {68 °F} or more** — Driving in 4GR at D or M range — Turbine speed **within 225—4,987 rpm** — Secondary gear revolution speed **50 rpm or more** — Differential gear case (output) revolution speed **35 rpm or more** — Vehicle speed **28 km/h {17 mph} or more** — Throttle opening angle at closed throttle position — Revolution ratio of forward clutch drum revolution to secondary gear revolution **0.6 or less** or **1.249 or more** — None of the following DTCs are present: P0706, P0707, P0708, P0712, P0713, P0715, P0720, P0751, P0752, P0753, P0756, P0757, P0758, P0761, P0762, P0763, P0767, P0768, P0771, P0772, P0773, P0791 **Diagnostic support note:** • This is a continuous monitor (CCM). • The MIL illuminates if the TCM detects the above malfunction condition in two consecutive drive cycles or in one drive cycle while the DTC for the same malfunction has been stored in the TCM. • The PENDING CODE is available if the TCM detects the above malfunction condition during the first drive cycle. • FREEZE FRAME DATA is available. • The AT warning light illuminates. • The DTC is stored in the TCM memory.
POSSIBLE CAUSE	• ATF level low • Deteriorated ATF • Shift solenoid D stuck off • Control valve stuck • TCM malfunction

Diagnostic procedure

STEP	INSPECTION		ACTION
1	**VERIFY FREEZE FRAME DATA HAS BEEN RECORDED** • Has the FREEZE FRAME DATA been recorded?	Yes	Go to the next step.
		No	Record the FREEZE FRAME DATA on the repair order, then go to the next step.
2	**VERIFY RELATED REPAIR INFORMATION AVAILABILITY** • Verify related Service Bulletins and/or on-line repair information availability. • Is any related repair information available?	Yes	Perform repair or diagnosis according to the available repair information. • If the vehicle is not repaired, go to the next step.
		No	Go to the next step.
3	**INSPECT ATF CONDITION** • Turn the ignition switch to the LOCK position. • Inspect the ATF condition. — Clear red: Normal — Milky: Water mixed in fluid — Reddish brown: Deteriorated ATF • Is it normal? (See 05–17A–10 Automatic Transaxle Fluid (ATF) Condition Inspection.)	Yes	Go to the next step.
		No	If the ATF color is milky or reddish brown, replace ATF, then go to Step 5. (See 05–17A–12 AUTOMATIC TRANSAXLE FLUID (ATF) REPLACEMENT [FS5A-EL].)
4	**INSPECT ATF LEVEL** • Start the engine. • Warm up the ATX. • Is the ATF level within the specification? (See 05–17A–11 Automatic Transaxle Fluid (ATF) Level Inspection.)	Yes	Go to the next step.
		No	Add ATF to the specified level, then go to Step 7. (See 05–17A–11 Automatic Transaxle Fluid (ATF) Level Inspection.)
5	**INSPECT LINE PRESSURE** • Start the engine. • Measure the line pressures. (See 05–17A–5 Line Pressure Test.) • Are the line pressures within the specifications?	Yes	Go to the next step.
		No	• All ranges: Replace the oil pump or control valve body, then go to Step 7. • Any ranges: Replace the automatic transaxle, then go to Step 7. (See 05–17A–39 AUTOMATIC TRANSAXLE REMOVAL/INSTALLATION [FS5A-EL].) (See ATX Workshop Manual FS5A-EL.)
6	**INSPECT OPERATION OF EACH VALVE AND EACH SPRING** • Turn the ignition switch to the LOCK position. • Remove the primary control valve body. • Disassemble the primary control valve body. • Is each valve operation normal and is the return spring normal? (See 05–17A–46 PRIMARY CONTROL VALVE BODY REMOVAL [FS5A-EL].) (See 05–17A–47 PRIMARY CONTROL VALVE BODY INSTALLATION [FS5A-EL].) (See ATX Workshop Manual FS5A-EL.)	Yes	Replace the automatic transaxle, then go to the next step. (See 05–17A–39 AUTOMATIC TRANSAXLE REMOVAL/INSTALLATION [FS5A-EL].) (See ATX Workshop Manual FS5A-EL.)
		No	Repair or replace the shift valve and return spring, then go to the next step. (See 05–17A–46 PRIMARY CONTROL VALVE BODY REMOVAL [FS5A-EL].) (See 05–17A–47 PRIMARY CONTROL VALVE BODY INSTALLATION [FS5A-EL].) (See ATX Workshop Manual FS5A-EL.)
7	**VERIFY TROUBLESHOOTING OF DTC P0766 COMPLETED** • Make sure to reconnect all the disconnected connectors. • Clear the DTC from the memory using the WDS or equivalent. • Start the engine. • Warm up the ATX. • Drive the vehicle under the following conditions and make sure that gears shift smoothly from 1GR to 4GR: — ATF temperature (TFT PID): **20 °C {68 °F} or more** — Drive in the D range — Throttle opening angle (THOP PID): **0%** (4GR only) — Vehicle speed (VSS PID): **28 km/h {17 mph} or more.** (4GR only) • Is the PENDING CODE present?	Yes	Replace the TCM, then go to the next step. (See 05–17A–38 TCM REMOVAL/INSTALLATION [FS5A-EL].)
		No	Go to the next step.
8	**VERIFY AFTER REPAIR PROCEDURE** • Perform the "After Repair Procedure". (See 05–02A–4 AFTER REPAIR PROCEDURE [FS5A-EL].) • Are any DTCs present?	Yes	Go to the applicable DTC inspection.
		No	DTC troubleshooting completed.

DTC P0767 [FS5A-EL]

E6U050200000W89

DTC P0767	Shift solenoid D stuck on
DETECTION CONDITION	• When any of DTC P0731, P0732, P0734, and P0741 are not output, and all conditions below are satisfie — Engine running — ATF temperature **20 °C {68 °F} or more** — Driving in 3GR at D or M range — Turbine speed **within 225—4,987 rpm** — Differential gear case (output) revolution speed **35 rpm or more** — Revolution ratio of forward clutch drum revolution to secondary gear revolution **0.863 or less** — None of the following DTCs are present: P0706, P0707, P0708, P0712, P0713, P0715, P0720, P0751, P0752, P0753, P0756, P0757, P0758, P0761, P0762, P0763, P0766, P0768, P0771, P0772, P0773, P0791 **Diagnostic support note:** • This is a continuous monitor (CCM). • The MIL illuminates if the TCM detects the above malfunction condition in two consecutive drive cycles or in one drive cycle while the DTC for the same malfunction has been stored in the TCM. • The PENDING CODE is available if the TCM detects the above malfunction condition during the first drive cycle. • FREEZE FRAME DATA is available. • The AT warning light illuminates. • The DTC is stored in the TCM memory.
POSSIBLE CAUSE	• ATF level low • Deteriorated ATF • Shift solenoid D stuck on • Control valve stuck • TCM malfunction

Diagnostic procedure

STEP	INSPECTION		ACTION
1	**VERIFY FREEZE FRAME DATA HAS BEEN RECORDED** • Has the FREEZE FRAME DATA been recorded?	Yes	Go to the next step.
		No	Record the FREEZE FRAME DATA on the repair order, then go to the next step.
2	**VERIFY RELATED REPAIR INFORMATION AVAILABILITY** • Verify related Service Bulletins and/or on-line repair information availability. • Is any related repair information available?	Yes	Perform repair or diagnosis according to the available repair information. • If the vehicle is not repaired, go to the next step.
		No	Go to the next step.
3	**INSPECT ATF CONDITION** • Turn the ignition switch to the LOCK position. • Inspect the ATF condition. — Clear red: Normal — Milky: Water mixed in fluid — Reddish brown: Deteriorated ATF • Is it normal? (See 05–17A–10 Automatic Transaxle Fluid (ATF) Condition Inspection.)	Yes	Go to the next step.
		No	If the ATF color is milky or reddish brown, replace ATF, then go to Step 5. (See 05–17A–12 AUTOMATIC TRANSAXLE FLUID (ATF) REPLACEMENT [FS5A-EL].)
4	**INSPECT ATF LEVEL** • Start the engine. • Warm up the ATX. • Is the ATF level within the specification? (See 05–17A–11 Automatic Transaxle Fluid (ATF) Level Inspection.)	Yes	Go to the next step.
		No	Add ATF to the specified level, then go to Step 7. (See 05–17A–11 Automatic Transaxle Fluid (ATF) Level Inspection.)
5	**INSPECT LINE PRESSURE** • Start the engine. • Measure the line pressures. (See 05–17A–5 Line Pressure Test.) • Are the line pressures within the specifications?	Yes	Go to the next step.
		No	• All ranges: Replace the oil pump or control valve body, then go to Step 7. • Any ranges: Replace the automatic transaxle, then go to Step 7. (See 05–17A–39 AUTOMATIC TRANSAXLE REMOVAL/INSTALLATION [FS5A-EL].) (See ATX Workshop Manual FS5A-EL.)
6	**INSPECT OPERATION OF EACH VALVE AND EACH SPRING** • Turn the ignition switch to the LOCK position. • Remove the primary control valve body. • Disassemble the primary control valve body. • Is each valve operation normal and is the return spring normal? (See 05–17A–46 PRIMARY CONTROL VALVE BODY REMOVAL [FS5A-EL].) (See 05–17A–47 PRIMARY CONTROL VALVE BODY INSTALLATION [FS5A-EL].) (See ATX Workshop Manual FS5A-EL.)	Yes	Replace the automatic transaxle, then go to the next step. (See 05–17A–39 AUTOMATIC TRANSAXLE REMOVAL/INSTALLATION [FS5A-EL].) (See ATX Workshop Manual FS5A-EL.)
		No	Repair or replace the shift valve and return spring, then go to the next step. (See 05–17A–46 PRIMARY CONTROL VALVE BODY REMOVAL [FS5A-EL].) (See 05–17A–47 PRIMARY CONTROL VALVE BODY INSTALLATION [FS5A-EL].) (See ATX Workshop Manual FS5A-EL.)
7	**VERIFY TROUBLESHOOTING OF DTC P0767 COMPLETED** • Make sure to reconnect all the disconnected connectors. • Clear the DTC from the memory using the WDS or equivalent. • Start the engine. • Warm up the ATX. • Drive the vehicle under the following conditions and make sure that gears shift smoothly from 1GR to 4GR. — ATF temperature (TFT PID): **20 °C {68 °F} or more** — Drive in the D range, 3GR • Is the PENDING CODE present?	Yes	Replace the TCM, then go to the next step. (See 05–17A–38 TCM REMOVAL/INSTALLATION [FS5A-EL].)
		No	Go to the next step.
8	**VERIFY AFTER REPAIR PROCEDURE** • Perform the "After Repair Procedure". (See 05–02A–4 AFTER REPAIR PROCEDURE [FS5A-EL].) • Are any DTCs present?	Yes	Go to the applicable DTC inspection.
		No	DTC troubleshooting completed.

DTC P0768 [FS5A-EL]

E6U050200000W90

DTC P0768	Shift solenoid D malfunction (electrical)
DETECTION CONDITION	• If TCM detects either of the following conditions while driving in 4GR at D range, the TCM determines the shift solenoid D circuit has a malfunction. — Shift solenoid D voltage stuck at **B+** after engine start — Shift solenoid D voltage stuck at **0 V** after engine start **Diagnostic support note:** • This is a continuous monitor (CCM). • The MIL illuminates if the TCM detects the above malfunction conditions during the first drive cycle. • The PENDING CODE is available if the TCM detects the above malfunction condition during the first drive cycle. • FREEZE FRAME DATA is available. • The AT warning light illuminates. • The DTC is stored in the TCM memory.
POSSIBLE CAUSE	• Shift solenoid D malfunction • Short to ground in wiring harness between transaxle connector (primary) terminal B and TCM terminal 1F • Short to power supply in wiring harness between transaxle connector (primary) terminal B and TCM terminal 1F • Open circuit in wiring harness between shift solenoid D terminal A and transaxle connector (primary) terminal B • Open circuit in wiring harness between transaxle connector (primary) terminal B and TCM terminal 1F • Damaged connector between shift solenoid D and TCM • TCM malfunction

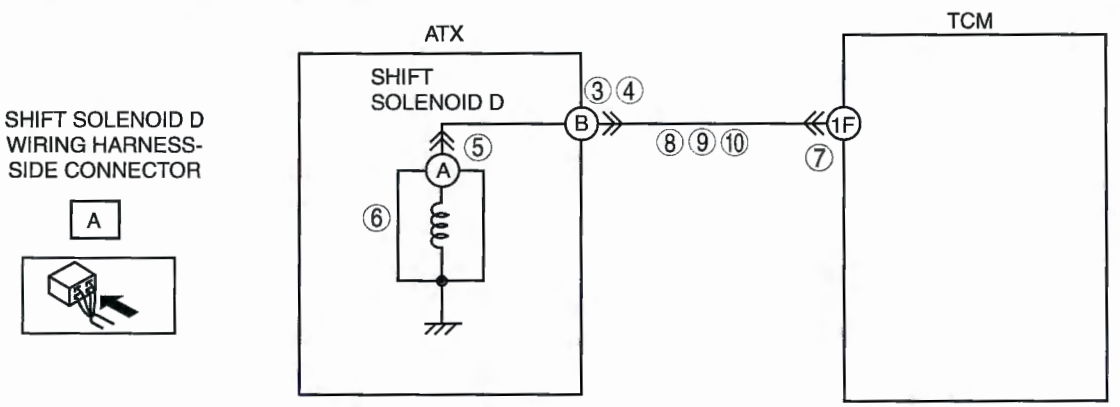



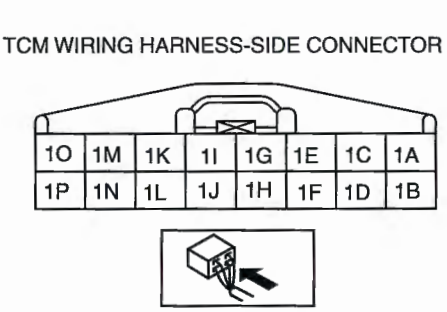

Diagnostic procedure

STEP	INSPECTION		ACTION
1	**VERIFY FREEZE FRAME DATA HAS BEEN RECORDED** • Has the FREEZE FRAME DATA been recorded?	Yes	Go to the next step.
		No	Record the FREEZE FRAME DATA on the repair order, then go to the next step.
2	**VERIFY RELATED REPAIR INFORMATION AVAILABILITY** • Verify related Service Bulletins and/or on-line repair information availability. • Is any related repair information available?	Yes	Perform repair or diagnosis according to the available repair information. • If the vehicle is not repaired, go to the next step.
		No	Go to the next step.

STEP	INSPECTION		ACTION
3	**INSPECT TRANSAXLE CONNECTOR FOR POOR CONNECTION** • Turn the ignition switch to the LOCK position. • Disconnect the transaxle connector (primary). • Inspect for poor connection (such as damaged/ pulled-out pins, corrosion). • Is the connection normal?	Yes	Go to the next step.
		No	Repair or replace the connector and/or terminals, then go to Step 11.
4	**INSPECT RESISTANCE** • Inspect the resistance between transaxle connector (primary) terminal B (transaxle case side) and body ground. • Is the resistance **within 10.9—26.2 ohms**? (See 05–17A–28 Resistance Inspection (On-Vehicle Inspection).)	Yes	Go to Step 7.
		No	Go to the next step.
5	**INSPECT SHIFT SOLENOID D CONNECTOR FOR POOR CONNECTION** • Disconnect the shift solenoid D connector. • Inspect for poor connection (such as damaged/ pulled-out pins, corrosion). • Is the connection normal?	Yes	Go to the next step.
		No	Repair or replace the connector and/or terminals, then go to Step 11.
6	**INSPECT RESISTANCE** • Inspect the resistance between shift solenoid D terminal A (part-side) and body ground. • Is the resistance **within 10.9—26.2 ohms**? (See 05–17A–28 Resistance Inspection (On-Vehicle Inspection).)	Yes	Replace the solenoid wiring harness, then go to Step 11.
		No	Verify shift solenoid D installation. • If solenoid installed correctly, replace the solenoid, then go to Step 11. (See 05–17A–30 SOLENOID VALVE REMOVAL/ INSTALLATION (PRIMARY CONTROL VALVE BODY) [FS5A-EL].)
7	**INSPECT TCM CONNECTOR FOR POOR CONNECTION** • Disconnect the TCM connector. • Inspect for poor connection (such as damaged/ pulled-out pins, corrosion). • Is the connection normal?	Yes	Go to the next step.
		No	Repair or replace the connector and/or terminals, then go to Step 11.
8	**INSPECT TRANSAXLE CONNECTOR CIRCUIT FOR OPEN CIRCUIT** • Inspect for continuity between TCM terminal 1F (wiring harness-side) and transaxle connector (primary) terminal B (wiring harness-side). • Is there continuity between terminals?	Yes	Go to the next step.
		No	Repair or replace the wiring harness, then go to Step 11.
9	**INSPECT TRANSAXLE CONNECTOR CIRCUIT FOR SHORT TO POWER SUPPLY** • Turn the ignition switch to the ON position (engine off). • Inspect the voltage at transaxle connector (primary) terminal B (wiring harness-side). • Is the voltage **0 V**?	Yes	Go to the next step.
		No	Repair or replace the wiring harness, then go to Step 11.
10	**INSPECT TCM CIRCUIT FOR SHORT TO GROUND** • Turn the ignition switch to the LOCK position. • Inspect for continuity between TCM terminal 1F (wiring harness-side) and body ground. • Is there continuity?	Yes	Repair or replace the wiring harness, then go to Step 11.
		No	Go to the next step.
11	**VERIFY TROUBLESHOOTING OF DTC P0768 COMPLETED** • Make sure to reconnect all the disconnected connectors. • Clear the DTC from the memory using the WDS or equivalent. • Drive the vehicle in D range and make sure that gears shift smoothly from 1GR to 4GR. • Are any DTCs present?	Yes	Replace the TCM, then go to the next step. (See 05–17A–38 TCM REMOVAL/INSTALLATION [FS5A-EL].)
		No	No concern is detected. Go to the next step.
12	**VERIFY AFTER REPAIR PROCEDURE** • Perform the "After Repair Procedure". (See 05–02A–4 AFTER REPAIR PROCEDURE [FS5A-EL].) • Are any DTCs present?	Yes	Go to the applicable DTC inspection.
		No	DTC troubleshooting completed.

DTC P0771 [FS5A-EL]

E6U050200000W91

DTC P0771	Shift solenoid E stuck off
DETECTION CONDITION	• When any of DTC P0732, and P0734 are not output, and all conditions below are satisfied. — Is DTC P0731 not output while driving in 1GR at D range — Engine running — ATF temperature **20 °C {68 °F} or more** — Driving in 4GR at D range — Turbine speed **within 225—4,987 rpm** — Vehicle speed **within 60—100 km/h {37—62 mph}** — Torque converter clutch (TCC) operating — Shift solenoid A duty value exceeds **99%** — Difference between engine speed and turbine speed **more than 100 rpm** — None of the following DTCs are present: P0706, P0707, P0708, P0712, P0713, P0715, P0720, P0751, P0752, P0753, P0756, P0757, P0758, P0761, P0762, P0763, P0766, P0767, P0768, P0772, P0773, P0791 **Diagnostic support note:** • This is a continuous monitor (CCM). • The MIL illuminates if the TCM detects the above malfunction condition in two consecutive drive cycles or in one drive cycle while the DTC for the same malfunction has been stored in the TCM. • The PENDING CODE is available if the TCM detects the above malfunction condition during the first drive cycle. • FREEZE FRAME DATA is available. • The AT warning light illuminates. • The DTC is stored in the TCM memory.
POSSIBLE CAUSE	• ATF level low • Deteriorated ATF • Shift solenoid E stuck off • Control valve stuck • TCM malfunction

Diagnostic procedure

STEP	INSPECTION		ACTION
1	**VERIFY FREEZE FRAME DATA HAS BEEN RECORDED** • Has the FREEZE FRAME DATA been recorded?	Yes	Go to the next step.
		No	Record the FREEZE FRAME DATA on the repair order, then go to the next step.
2	**VERIFY RELATED REPAIR INFORMATION AVAILABILITY** • Verify related Service Bulletins and/or on-line repair information availability. • Is any related repair information available?	Yes	Perform repair or diagnosis according to the available repair information. • If the vehicle is not repaired, go to the next step.
		No	Go to the next step.
3	**INSPECT ATF CONDITION** • Turn the ignition switch to the LOCK position. • Inspect the ATF condition. — Clear red: Normal — Milky: Water mixed in fluid — Reddish brown: Deteriorated ATF • Is it normal? (See 05–17A–10 Automatic Transaxle Fluid (ATF) Condition Inspection.)	Yes	Go to the next step.
		No	If the ATF color is milky or reddish brown, replace ATF, then go to Step 5. (See 05–17A–12 AUTOMATIC TRANSAXLE FLUID (ATF) REPLACEMENT [FS5A-EL].)
4	**INSPECT ATF LEVEL** • Start the engine. • Warm up the ATX. • Is the ATF level within the specification? (See 05–17A–11 Automatic Transaxle Fluid (ATF) Level Inspection.)	Yes	Go to the next step.
		No	Add ATF to the specified level, then go to Step 7. (See 05–17A–11 Automatic Transaxle Fluid (ATF) Level Inspection.)
5	**INSPECT LINE PRESSURE** • Start the engine. • Measure the line pressures. (See 05–17A–5 Line Pressure Test.) • Are the line pressures within the specifications?	Yes	Go to the next step.
		No	• All ranges: Replace the oil pump or control valve body, then go to Step 7. • Any ranges: Replace the automatic transaxle, then go to Step 7. (See 05–17A–39 AUTOMATIC TRANSAXLE REMOVAL/INSTALLATION [FS5A-EL].) (See ATX Workshop Manual FS5A-EL.)
6	**INSPECT OPERATION OF EACH VALVE AND EACH SPRING** • Turn the ignition switch to the LOCK position. • Remove the primary control valve body. • Disassemble the primary control valve body. • Is each valve operation normal and is the return spring normal? (See 05–17A–46 PRIMARY CONTROL VALVE BODY REMOVAL [FS5A-EL].) (See 05–17A–47 PRIMARY CONTROL VALVE BODY INSTALLATION [FS5A-EL].) (See ATX Workshop Manual FS5A-EL.)	Yes	Replace the automatic transaxle, then go to the next step. (See 05–17A–39 AUTOMATIC TRANSAXLE REMOVAL/INSTALLATION [FS5A-EL].) (See ATX Workshop Manual FS5A-EL.)
		No	Repair or replace the shift valve and return spring, then go to the next step. (See 05–17A–46 PRIMARY CONTROL VALVE BODY REMOVAL [FS5A-EL].) (See 05–17A–47 PRIMARY CONTROL VALVE BODY INSTALLATION [FS5A-EL].) (See ATX Workshop Manual FS5A-EL.)
7	**VERIFY TROUBLESHOOTING OF DTC P0771 COMPLETED** • Make sure to reconnect all the disconnected connectors. • Clear the DTC from the memory using the WDS or equivalent. • Start the engine. • Warm up the ATX. • Drive the vehicle under the following conditions and make sure that gears shift smoothly from 1GR to 4GR. — ATF temperature (TFT PID): **20 °C {68 °F} or more** — Drive in the D range — Vehicle speed (VSS PID): **within 60—100 km/h {37—62 mph}** (4GR only). • Is the PENDING CODE present?	Yes	Replace the TCM, then go to the next step. (See 05–17A–38 TCM REMOVAL/INSTALLATION [FS5A-EL].)
		No	Go to the next step.
8	**VERIFY AFTER REPAIR PROCEDURE** • Perform the "After Repair Procedure". (See 05–02A–4 AFTER REPAIR PROCEDURE [FS5A-EL].) • Are any DTCs present?	Yes	Go to the applicable DTC inspection.
		No	DTC troubleshooting completed.

DTC P0772 [FS5A-EL]

E6U050200000W92

DTC P0772	Shift solenoid E stuck on
DETECTION CONDITION	• When any of DTC P0731, P0733, and P0734 are not output, and all of the following conditions are satisfie under each of the following throttle conditions. — Engine running — ATF temperature **20 °C {68 °F} or more** — Driving in 4GR at D or M range — Turbine speed **within 225—4,987 rpm** — Vehicle speed **70 km/h {43 mph} or less** — Torque converter clutch (TCC) not operating — Difference between engine speed and turbine speed **50 rpm or less** — None of the following DTCs are present: P0706, P0707, P0708, P0712, P0713, P0715, P0720, P0751, P0752, P0753, P0756, P0757, P0758, P0761, P0762, P0763, P0766, P0767, P0768, P0771, P0773, P0791 • Throttle conditions — Throttle opening angle (THOP PID) is **6.25% or more** and **5 s or more** have passed — Throttle opening angle (THOP PID) is **within 3.13—6.25%** and **3 s or more** have passed — Throttle opening angle is at closed throttle position and **5 s or more** have passed **Diagnostic support note:** • This is a continuous monitor (CCM). • The MIL illuminates if the TCM detects the above malfunction condition in two consecutive drive cycles or in one drive cycle while the DTC for the same malfunction has been stored in the TCM. • The PENDING CODE is available if the TCM detects the above malfunction condition during the first drive cycle. • FREEZE FRAME DATA is available. • The AT warning light illuminates. • The DTC is stored in the TCM memory.
POSSIBLE CAUSE	• ATF level low • Deteriorated ATF • Shift solenoid E stuck on • Control valve stuck • TCM malfunction

Diagnostic procedure

STEP	INSPECTION		ACTION
1	**VERIFY FREEZE FRAME DATA HAS BEEN RECORDED** • Has the FREEZE FRAME DATA been recorded?	Yes	Go to the next step.
		No	Record the FREEZE FRAME DATA on the repair order, then go to the next step.
2	**VERIFY RELATED REPAIR INFORMATION AVAILABILITY** • Verify related Service Bulletins and/or on-line repair information availability. • Is any related repair information available?	Yes	Perform repair or diagnosis according to the available repair information. • If the vehicle is not repaired, go to the next step.
		No	Go to the next step.
3	**INSPECT ATF CONDITION** • Turn the ignition switch to the LOCK position. • Inspect the ATF condition. — Clear red: Normal — Milky: Water mixed in fluid — Reddish brown: Deteriorated ATF • Is it normal? (See 05–17A–10 Automatic Transaxle Fluid (ATF) Condition Inspection.)	Yes	Go to the next step.
		No	If the ATF color is milky or reddish brown, replace ATF, then go to Step 5. (See 05–17A–12 AUTOMATIC TRANSAXLE FLUID (ATF) REPLACEMENT [FS5A-EL].)
4	**INSPECT ATF LEVEL** • Start the engine. • Warm up the ATX. • Is the ATF level within the specification? (See 05–17A–11 Automatic Transaxle Fluid (ATF) Level Inspection.)	Yes	Go to the next step.
		No	Add ATF to the specified level, then go to Step 7. (See 05–17A–11 Automatic Transaxle Fluid (ATF) Level Inspection.)
5	**INSPECT LINE PRESSURE** • Start the engine. • Measure the line pressures. (See 05–17A–5 Line Pressure Test.) • Are the line pressures within the specifications?	Yes	Go to the next step.
		No	• All ranges: Replace the oil pump or control valve body, then go to Step 7. • Any ranges: Replace the automatic transaxle, then go to Step 7. (See 05–17A–39 AUTOMATIC TRANSAXLE REMOVAL/INSTALLATION [FS5A-EL].) (See ATX Workshop Manual FS5A-EL.)
6	**INSPECT OPERATION OF EACH VALVE AND EACH SPRING** • Turn the ignition switch to the LOCK position. • Remove the primary control valve body. • Disassemble the primary control valve body. • Is each valve operation normal and is the return spring normal? (See 05–17A–46 PRIMARY CONTROL VALVE BODY REMOVAL [FS5A-EL].) (See 05–17A–47 PRIMARY CONTROL VALVE BODY INSTALLATION [FS5A-EL].) (See ATX Workshop Manual FS5A-EL.)	Yes	Replace the automatic transaxle, then go to the next step. (See 05–17A–39 AUTOMATIC TRANSAXLE REMOVAL/INSTALLATION [FS5A-EL].) (See ATX Workshop Manual FS5A-EL.)
		No	Repair or replace the shift valve and return spring, then go to the next step. (See 05–17A–46 PRIMARY CONTROL VALVE BODY REMOVAL [FS5A-EL].) (See 05–17A–47 PRIMARY CONTROL VALVE BODY INSTALLATION [FS5A-EL].) (See ATX Workshop Manual FS5A-EL.)
7	**VERIFY TROUBLESHOOTING OF DTC P0772 COMPLETED** • Make sure to reconnect all the disconnected connectors. • Clear the DTC from the memory using the WDS or equivalent. • Start the engine. • Warm up the ATX. • Drive the vehicle under the following conditions and make sure that gears shift smoothly from 1GR to 4GR. — ATF temperature (TFT PID): **20 °C {68 °F} or more** — Drive in the D range — Vehicle speed (VSS PID): **70 km/h {43 mph} or less** (4GR only) • Is the PENDING CODE present?	Yes	Replace the TCM, then go to the next step. (See 05–17A–38 TCM REMOVAL/INSTALLATION [FS5A-EL].)
		No	Go to the next step.
8	**VERIFY AFTER REPAIR PROCEDURE** • Perform the "After Repair Procedure". (See 05–02A–4 AFTER REPAIR PROCEDURE [FS5A-EL].) • Are any DTCs present?	Yes	Go to the applicable DTC inspection.
		No	DTC troubleshooting completed.

DTC P0773 [FS5A-EL]

E6U050200000W93

DTC P0773	Shift solenoid E malfunction (electrical)
DETECTION CONDITION	• If TCM detects either of the following conditions while driving in 4GR at D range with TCC operating, TCM determines that shift solenoid E circuit has a malfunction. — Shift solenoid E voltage stuck at **B+** after engine start — Shift solenoid E voltage stuck at **0 V** after engine start **Diagnostic support note:** • This is a continuous monitor (CCM). • The MIL illuminates if the TCM detects the above malfunction conditions during the first drive cycle. • The PENDING CODE is available if the TCM detects the above malfunction condition during the first drive cycle. • FREEZE FRAME DATA is available. • The AT warning light illuminates. • The DTC is stored in the TCM memory.
POSSIBLE CAUSE	• Shift solenoid E malfunction • Short to ground in wiring harness between transaxle connector (primary) terminal F and TCM terminal 1H • Short to power supply in wiring harness between transaxle connector (primary) terminal F and TCM terminal 1H • Open circuit in wiring harness between shift solenoid E terminal A and transaxle connector (primary) terminal F • Open circuit in wiring harness between transaxle connector (primary) terminal F and TCM terminal 1H • Damaged connector between shift solenoid E and TCM • TCM malfunction

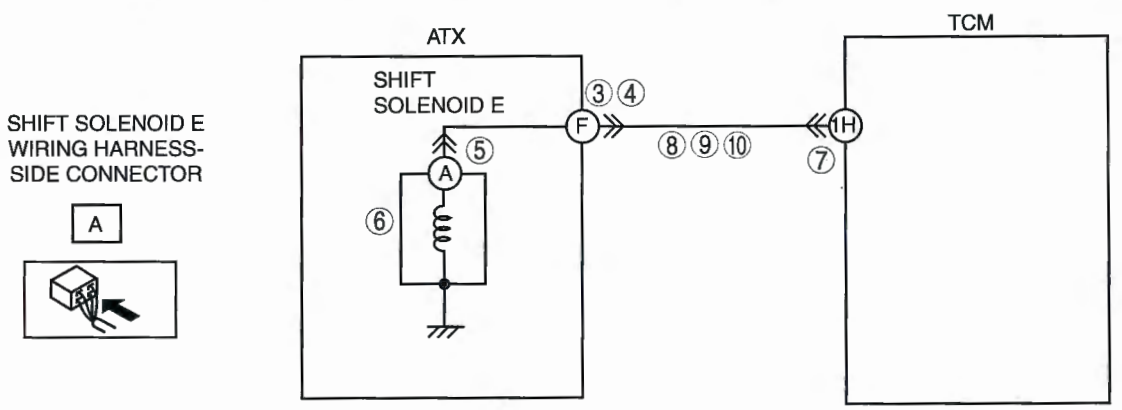



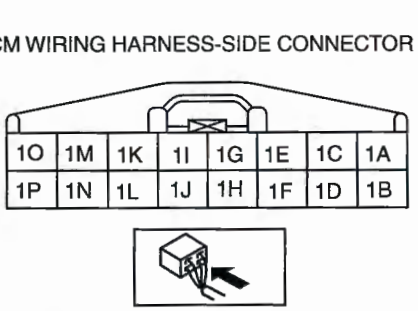

Diagnostic procedure

STEP	INSPECTION		ACTION
1	**VERIFY FREEZE FRAME DATA HAS BEEN RECORDED** • Has the FREEZE FRAME DATA been recorded?	Yes	Go to the next step.
		No	Record the FREEZE FRAME DATA on the repair order, then go to the next step.
2	**VERIFY RELATED REPAIR INFORMATION AVAILABILITY** • Verify related Service Bulletins and/or on-line repair information availability. • Is any related repair information available?	Yes	Perform repair or diagnosis according to the available repair information. • If the vehicle is not repaired, go to the next step.
		No	Go to the next step.

STEP	INSPECTION		ACTION
3	**INSPECT TRANSAXLE CONNECTOR FOR POOR CONNECTION** • Turn the ignition switch to the LOCK position. • Disconnect the transaxle connector (primary). • Inspect for poor connection (such as damaged/ pulled-out pins, corrosion). • Is the connection normal?	Yes	Go to the next step.
		No	Repair or replace the connector and/or terminals, then go to Step 11.
4	**INSPECT RESISTANCE** • Inspect the resistance between transaxle connector (primary) terminal F (transaxle case side) and body ground. • Is the resistance **within 10.9—26.2 ohms**? (See 05–17A–28 Resistance Inspection (On-Vehicle Inspection).)	Yes	Go to Step 7.
		No	Go to the next step.
5	**INSPECT SHIFT SOLENOID E CONNECTOR FOR POOR CONNECTION** • Disconnect the shift solenoid E connector. • Inspect for poor connection (such as damaged/ pulled-out pins, corrosion). • Is the connection normal?	Yes	Go to the next step.
		No	Repair or replace the connector and/or terminals, then go to Step 11.
6	**INSPECT RESISTANCE** • Inspect the resistance between shift solenoid E terminal A (part-side) and body ground. • Is the resistance **within 10.9—26.2 ohms**? (See 05–17A–29 Resistance Inspection (Off-Vehicle Inspection).)	Yes	Replace the solenoid wiring harness, then go to Step 11.
		No	Verify shift solenoid E installation. • If solenoid installed correctly, replace the solenoid, then go to Step 11. (See 05–17A–30 SOLENOID VALVE REMOVAL/ INSTALLATION (PRIMARY CONTROL VALVE BODY) [FS5A-EL].)
7	**INSPECT TCM CONNECTOR FOR POOR CONNECTION** • Disconnect the TCM connector. • Inspect for poor connection (such as damaged/ pulled-out pins, corrosion). • Is the connection normal?	Yes	Go to the next step.
		No	Repair or replace the connector and/or terminals, then go to Step 11.
8	**INSPECT TRANSAXLE CONNECTOR CIRCUIT FOR OPEN CIRCUIT** • Inspect for continuity between TCM terminal 1H (wiring harness-side) and transaxle connector (primary) terminal F (wiring harness-side). • Is there continuity between terminals?	Yes	Go to the next step.
		No	Repair or replace the wiring harness, then go to Step 11.
9	**INSPECT TRANSAXLE CONNECTOR CIRCUIT FOR SHORT TO POWER SUPPLY** • Turn the ignition switch to the ON position (engine off). • Inspect the voltage at transaxle connector (primary) terminal F (wiring harness-side). • Is the voltage **0 V**?	Yes	Go to the next step.
		No	Repair or replace the wiring harness, then go to Step 11.
10	**INSPECT TCM CIRCUIT FOR SHORT TO GROUND** • Turn the ignition switch to the LOCK position. • Inspect for continuity between TCM terminal 1H (wiring harness-side) and body ground. • Is there continuity?	Yes	Repair or replace the wiring harness, then go to Step 11.
		No	Go to the next step.
11	**VERIFY TROUBLESHOOTING OF DTC P0773 COMPLETED** • Make sure to reconnect all the disconnected connectors. • Clear the DTC from the memory using the WDS or equivalent. • Drive the vehicle in D range and make sure that gears shift smoothly from 1GR to 4GR. • Are any DTCs present?	Yes	Replace the TCM, then go to the next step. (See 05–17A–38 TCM REMOVAL/INSTALLATION [FS5A-EL].)
		No	No concern is detected. Go to the next step.
12	**VERIFY AFTER REPAIR PROCEDURE** • Perform the "After Repair Procedure". (See 05–02A–4 AFTER REPAIR PROCEDURE [FS5A-EL].) • Are any DTCs present?	Yes	Go to the applicable DTC inspection.
		No	DTC troubleshooting completed.

DTC P0777 [FS5A-EL]

E6U050200000W94

DTC P0777	Pressure control solenoid B stuck on
DETECTION CONDITION	• With the engine running, all of the following conditions are met: — ATF temperature **20 °C {68 °F} or more** — Turbine speed **within 225—4,987 rpm** — Secondary gear revolution speed **50 rpm or more** — Differential gear case (output) revolution speed **35 rpm or more** — Throttle opening angle **4.14% or more** — None of the following DTCs are present: P0706, P0707, P0708, P0712, P0713, P0715, P0720, P0778, P0791, P2707, P2708, P2709 — Revolution ratio of the secondary gear and differential gear case is **1.11 or more** when driving in 5GR. **Diagnostic support note:** • This is a continuous monitor (CCM). • The MIL illuminates if the TCM detects the above malfunction condition in two consecutive drive cycles or in one drive cycle while the DTC for the same malfunction has been stored in the TCM. • The PENDING CODE is available if the TCM detects the above malfunction condition during the first drive cycle. • FREEZE FRAME DATA is available. • The AT warning light illuminates. • The DTC is stored in the TCM memory.
POSSIBLE CAUSE	• ATF level low • Deteriorated ATF • Pressure control solenoid B stuck on • Control valve stuck • TCM malfunction

Diagnostic procedure

STEP	INSPECTION		ACTION
1	**VERIFY FREEZE FRAME DATA HAS BEEN RECORDED** • Has the FREEZE FRAME DATA been recorded?	Yes	Go to the next step.
		No	Record the FREEZE FRAME DATA on the repair order, then go to the next step.
2	**VERIFY RELATED REPAIR INFORMATION AVAILABILITY** • Verify related Service Bulletins and/or on-line repair information availability. • Is any related repair information available?	Yes	Perform repair or diagnosis according to the available repair information. • If the vehicle is not repaired, go to the next step.
		No	Go to the next step.
3	**INSPECT ATF CONDITION** • Turn the ignition switch to the LOCK position. • Inspect the ATF condition. — Clear red: Normal — Milky: Water mixed in fluid — Reddish brown: Deteriorated ATF • Is it normal? (See 05–17A–10 Automatic Transaxle Fluid (ATF) Condition Inspection.)	Yes	Go to the next step.
		No	If the ATF color is milky or reddish brown, replace ATF, then go to Step 5. (See 05–17A–12 AUTOMATIC TRANSAXLE FLUID (ATF) REPLACEMENT [FS5A-EL].)
4	**INSPECT ATF LEVEL** • Start the engine. • Warm up the ATX. • Is the ATF level within the specification? (See 05–17A–11 Automatic Transaxle Fluid (ATF) Level Inspection.)	Yes	Go to the next step.
		No	Add ATF to the specified level, then go to Step 7. (See 05–17A–11 Automatic Transaxle Fluid (ATF) Level Inspection.)
5	**INSPECT LINE PRESSURE** • Start the engine. • Measure the line pressures. (See 05–17A–5 Line Pressure Test.) • Are the line pressures within the specifications?	Yes	Go to the next step.
		No	• All ranges: Replace the oil pump or control valve body, then go to Step 7. • Any ranges: Replace the automatic transaxle, then go to Step 7. (See 05–17A–39 AUTOMATIC TRANSAXLE REMOVAL/INSTALLATION [FS5A-EL].) (See ATX Workshop Manual FS5A-EL.)
6	**INSPECT OPERATION OF EACH VALVE AND EACH SPRING** • Turn the ignition switch to the LOCK position. • Remove the secondary control valve body. • Disassemble the secondary control valve body. • Is each valve operation normal and is the return spring normal? (See 05–17A–48 SECONDARY CONTROL VALVE BODY REMOVAL [FS5A-EL].) (See 05–17A–49 SECONDARY CONTROL VALVE BODY INSTALLATION [FS5A-EL].) (See ATX Workshop Manual FS5A-EL.)	Yes	Replace the automatic transaxle, then go to the next step. (See 05–17A–39 AUTOMATIC TRANSAXLE REMOVAL/INSTALLATION [FS5A-EL].) (See ATX Workshop Manual FS5A-EL.)
		No	Repair or replace the shift valve and return spring, then go to the next step. (See 05–17A–48 SECONDARY CONTROL VALVE BODY REMOVAL [FS5A-EL].) (See 05–17A–49 SECONDARY CONTROL VALVE BODY INSTALLATION [FS5A-EL].) (See ATX Workshop Manual FS5A-EL.)
7	**VERIFY TROUBLESHOOTING OF DTC P0777 COMPLETED** • Make sure to reconnect all the disconnected connectors. • Clear the DTC from the memory using the WDS or equivalent. • Start the engine. • Warm up the ATX. • Drive the vehicle under the following conditions and make sure that gears shift smoothly from 1GR to 5GR: — ATF temperature (TFT PID) (TFT PID): **20 °C {68 °F} or more** — Drive in the D range, 5GR — Throttle opening angle (THOP PID): **4.14% or more** • Is the PENDING CODE present?	Yes	Replace the TCM, then go to the next step. (See 05–17A–38 TCM REMOVAL/INSTALLATION [FS5A-EL].)
		No	Go to the next step.
8	**VERIFY AFTER REPAIR PROCEDURE** • Perform the "After Repair Procedure". (See 05–02A–4 AFTER REPAIR PROCEDURE [FS5A-EL].) • Are any DTCs present?	Yes	Go to the applicable DTC inspection.
		No	DTC troubleshooting completed.

DTC P0778 [FS5A-EL]

E6U050200000W95

DTC P0778	Pressure control solenoid B malfunction (electrical)
DETECTION CONDITION	• If TCM detects either of the following conditions, TCM determines that pressure control solenoid B circuit has a malfunction. — Pressure control solenoid B voltage stuck at **B+** after engine start — Pressure control solenoid B voltage stuck at **0 V** after engine start **Diagnostic support note:** • This is a continuous monitor (CCM). • The MIL illuminates if the TCM detects the above malfunction conditions during the first drive cycle. • The PENDING CODE is available if the TCM detects the above malfunction condition during the first drive cycle. • FREEZE FRAME DATA is available. • The AT warning light illuminates. • The DTC is stored in the TCM memory.
POSSIBLE CAUSE	• Pressure control solenoid B malfunction • Short to ground in wiring harness between transaxle connector (secondary) terminal A and TCM terminal 1D • Short to power supply in wiring harness between transaxle connector (secondary) terminal A and TCM terminal 1D • Open circuit in wiring harness between pressure control solenoid B terminal B and transaxle connector (secondary) terminal A • Open circuit in wiring harness between transaxle connector (secondary) terminal A and TCM terminal 1D • Open circuit in wiring harness between pressure control solenoid B terminal A and body ground • Damaged connector between pressure control solenoid B and TCM • TCM malfunction

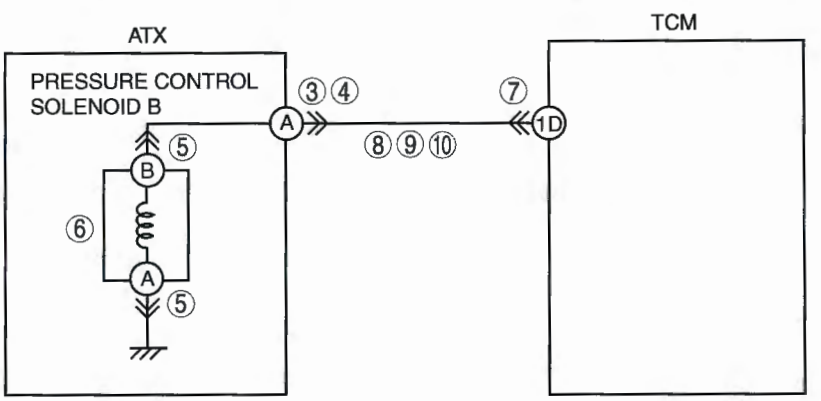

PRESSURE CONTROL SOLENOID B WIRING HARNESS-SIDE CONNECTOR

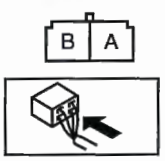

TRANSAXLE CONNECTOR (SECONDARY) WIRING HARNESS-SIDE CONNECTOR

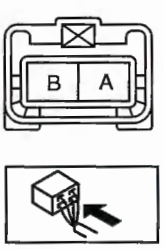

TCM WIRING HARNESS-SIDE CONNECTOR

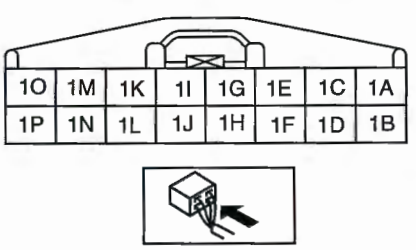

Diagnostic procedure

STEP	INSPECTION		ACTION
1	**VERIFY FREEZE FRAME DATA HAS BEEN RECORDED** • Has the FREEZE FRAME DATA been recorded?	Yes	Go to the next step.
		No	Record the FREEZE FRAME DATA on the repair order, then go to the next step.
2	**VERIFY RELATED REPAIR INFORMATION AVAILABILITY** • Verify related Service Bulletins and/or on-line repair information availability. • Is any related repair information available?	Yes	Perform repair or diagnosis according to the available repair information. • If the vehicle is not repaired, go to the next step.
		No	Go to the next step.

STEP	INSPECTION		ACTION
3	**INSPECT TRANSAXLE CONNECTOR FOR POOR CONNECTION** • Turn the ignition switch to the LOCK position. • Disconnect the transaxle connector (secondary. • Inspect for poor connection (such as damaged/ pulled-out pins, corrosion). • Is the connection normal?	Yes	Go to the next step.
		No	Repair or replace the connector and/or terminals, then go to Step 11.
4	**INSPECT RESISTANCE** • Inspect the resistance between transaxle connector (secondary) terminal A (transaxle case side) and body ground. • Is the resistance **within 1.0—4.2 ohms**? (See 05–17A–31 Resistance Inspection (On-Vehicle Inspection).)	Yes	Go to Step 7.
		No	Go to the next step.
5	**INSPECT PRESSURE CONTROL SOLENOID B CONNECTOR FOR POOR CONNECTION** • Disconnect the pressure control solenoid B connector. • Inspect for poor connection (such as damaged/ pulled-out pins, corrosion). • Is the connection normal?	Yes	Go to the next step.
		No	Repair or replace the connector and/or terminals, then go to Step 11.
6	**INSPECT RESISTANCE** • Inspect the resistance between pressure control solenoid B terminals A and B (part-side). • Is the resistance **within 1.0—4.2 ohms**? (See 05–17A–32 Resistance Inspection (Off-Vehicle Inspection).)	Yes	Replace the solenoid wiring harness, then go to Step 11.
		No	Verify shift pressure control solenoid B installation. • If solenoid installed correctly, replace the solenoid, then go to Step 11. (See 05–17A–32 SOLENOID VALVE REMOVAL/ INSTALLATION (SECONDARY CONTROL VALVE BODY) [FS5A-EL].)
7	**INSPECT TCM CONNECTOR FOR POOR CONNECTION** • Disconnect the TCM connector. • Inspect for poor connection (such as damaged/ pulled-out pins, corrosion). • Is the connection normal?	Yes	Go to the next step.
		No	Repair or replace the connector and/or terminals, then go to Step 11.
8	**INSPECT TRANSAXLE CONNECTOR CIRCUIT FOR OPEN CIRCUIT** • Inspect for continuity between TCM terminal 1D (wiring harness-side) and transaxle connector (secondary) terminal A (wiring harness-side). • Is there continuity between terminals?	Yes	Go to the next step.
		No	Repair or replace the wiring harness, then go to Step 11.
9	**INSPECT TRANSAXLE CONNECTOR CIRCUIT FOR SHORT TO POWER SUPPLY** • Turn the ignition switch to the ON position (engine off). • Inspect the voltage at transaxle connector (secondary) terminal A (wiring harness-side). • Is the voltage **0 V**?	Yes	Go to the next step.
		No	Repair or replace the wiring harness, then go to Step 11.
10	**INSPECT TCM CIRCUIT FOR SHORT TO GROUND** • Turn the ignition switch to the LOCK position. • Inspect for continuity between TCM terminal 1D (wiring harness-side) and body ground. • Is there continuity?	Yes	Repair or replace the wiring harness, then go to Step 11.
		No	Go to the next step.
11	**VERIFY TROUBLESHOOTING OF DTC P0778 COMPLETED** • Make sure to reconnect all the disconnected connectors. • Clear the DTC from the memory using the WDS or equivalent. • Drive the vehicle in D range and make sure that the gears shift smoothly from 1GR to 5GR. • Are any DTCs present?	Yes	Replace the TCM, then go to the next step. (See 05–17A–38 TCM REMOVAL/INSTALLATION [FS5A-EL].)
		No	No concern is detected. Go to the next step.
12	**VERIFY AFTER REPAIR PROCEDURE** • Perform the "After Repair Procedure". (See 05–02A–4 AFTER REPAIR PROCEDURE [FS5A-EL].) • Are any DTCs present?	Yes	Go to the applicable DTC inspection.
		No	DTC troubleshooting completed.

DTC P0791 [FS5A-EL]

E6U050200000W96

DTC P0791	Intermediate sensor circuit malfunction
DETECTION CONDITION	• Secondary gear revolution speed signal is not input after the following conditions are met and **4.5 s or more** have passed. — D range selected — Engine coolant temperature **60 °C {140 °F} or more** — Engine speed **500 rpm or more** — Vehicle speed **40 km/h {25 mph} or more** **Diagnostic support note:** • This is a continuous monitor (CCM). • The MIL illuminates if the TCM detects the above malfunction conditions during the first drive cycle. • The PENDING CODE is available if the TCM detects the above malfunction condition during the first drive cycle. • FREEZE FRAME DATA is available. • The AT warning light illuminates. • The DTC is stored in the TCM memory.
POSSIBLE CAUSE	• Intermediate sensor malfunction • Open circuit in wiring harness between intermediate sensor terminal B and TCM terminal 2L • Short to ground in wiring harness between intermediate sensor terminal B and TCM terminal 2L • Open circuit in wiring harness between intermediate sensor terminal A and AT main relay terminal A • Short to ground in wiring harness between intermediate sensor terminal A and AT main relay terminal A • Open circuit in wiring harness between intermediate sensor terminal C and body ground • Damaged connectors between intermediate sensor and TCM • TCM malfunction

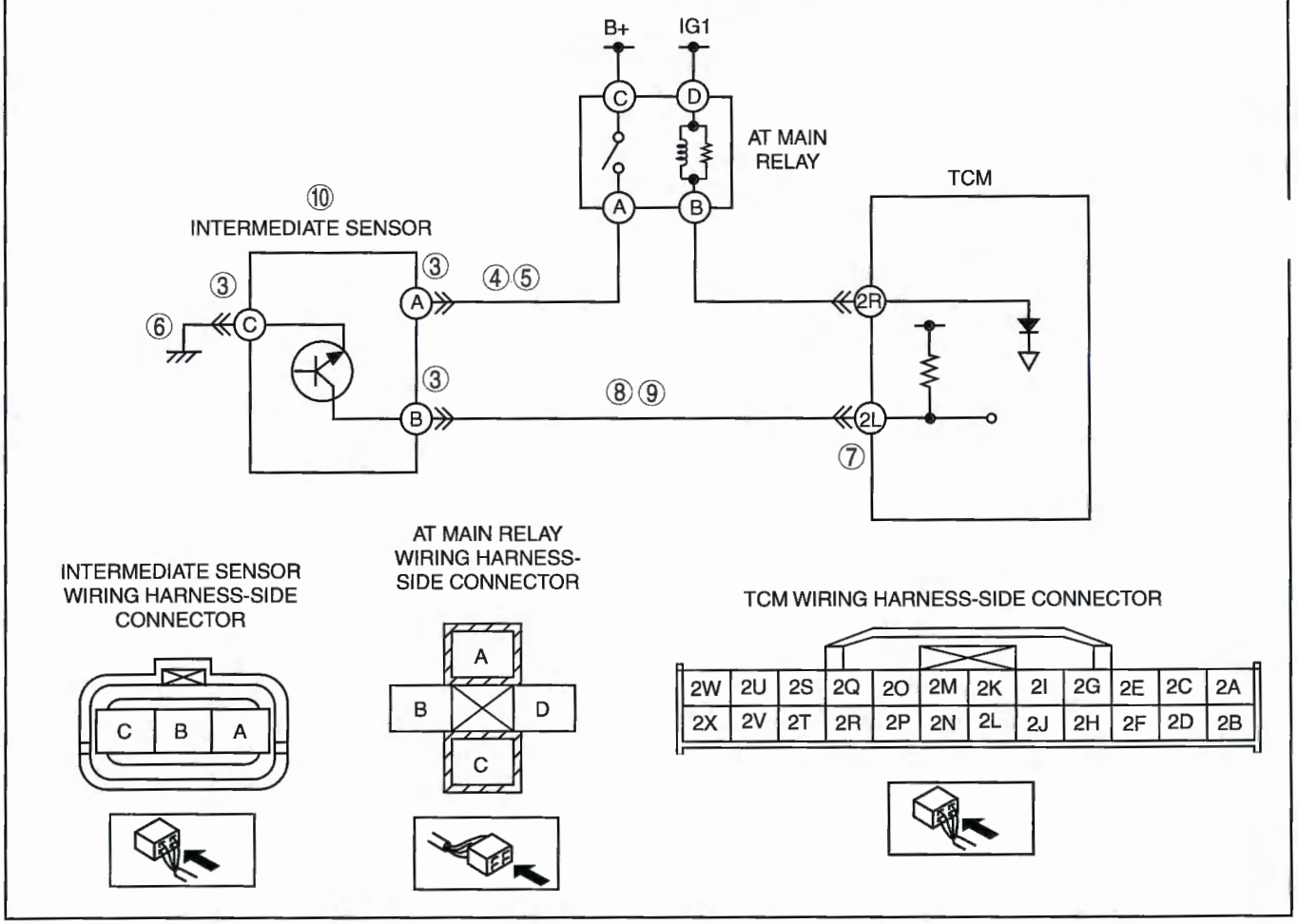

Diagnostic procedure

STEP	INSPECTION		ACTION
1	**VERIFY FREEZE FRAME DATA HAS BEEN RECORDED** • Has the FREEZE FRAME DATA been recorded?	Yes	Go to the next step.
		No	Record the FREEZE FRAME DATA on the repair order, then go to the next step.
2	**VERIFY RELATED SERVICE INFORMATION AVAILABILITY** • Verify related Service Bulletins and/or on-line repair information availability. • Is any related repair Information available?	Yes	Perform repair or diagnosis according to the available repair information. • If the vehicle is not repaired, go to the next step.
		No	Go to the next step.
3	**INSPECT INTERMEDIATE SENSOR CONNECTOR FOR POOR CONNECTION** • Turn the ignition switch to the LOCK position. • Disconnect the intermediate sensor connector. • Inspect for poor connection (such as damaged/ pulled-out pins, corrosion). • Is the connection normal?	Yes	Go to the next step.
		No	Repair or replace the pin or connector, then go to Step 11.
4	**INSPECT INTERMEDIATE SENSOR POWER CIRCUIT FOR OPEN CIRCUIT** • Verify that the intermediate sensor connector is disconnected. • Turn the ignition switch to the ON position (engine off). • Inspect the voltage between intermediate sensor terminal A (wiring harness-side) and ground. • Is the voltage **B+**?	Yes	Go to Step 6.
		No	Go to the next step.
5	**INSPECT INTERMEDIATE SENSOR POWER CIRCUIT FOR SHORT TO GROUND** • Turn the ignition switch to the LOCK position. • Inspect for continuity between intermediate sensor terminal A (wiring harness-side) and ground. • Is there continuity?	Yes	Go to the next step.
		No	Repair or replace the wiring harness, then go to Step 11.
6	**INSPECT INTERMEDIATE SENSOR GROUND CIRCUIT FOR OPEN CIRCUIT** • Verify that the intermediate sensor connector is disconnected. • Inspect for continuity between intermediate sensor (wiring harness-side) terminal C and ground. • Is there continuity?	Yes	Go to the next step.
		No	Repair or replace the wiring harness, then go to Step 11.
7	**INSPECT TCM CONNECTOR FOR POOR CONNECTION** • Disconnect the TCM connector. • Inspect for poor connection (such as damaged/ pulled-out pins, corrosion). • Is the connection normal?	Yes	Go to the next step.
		No	Repair or replace the pin or connector, then go to Step 11.
8	**INSPECT SECONDARY GEAR REVOLUTION SPEED SIGNAL CIRCUIT FOR OPEN CIRCUIT** • Disconnect the TCM connector and intermediate sensor connector. • Inspect for continuity between intermediate sensor terminal B and TCM terminal 2L. • Is there continuity?	Yes	Go to the next step.
		No	Repair or replace the wiring harness, then go to Step 11.
9	**INSPECT SECONDARY GEAR REVOLUTION SPEED SIGNAL CIRCUIT FOR SHORT TO GROUND** • Verity that the intermediate sensor connector and TCM connector are disconnected. • Inspect for continuity between TCM terminal 2L and body ground. • Is there continuity?	Yes	Repair or replace the wiring harness, then go to the next step.
		No	Replace the intermediate sensor, then go to the next step. (See 05–17A–25 INTERMEDIATE SENSOR REMOVAL/ INSTALLATION [FS5A-EL].)

STEP	INSPECTION		ACTION
10	**INSPECT INTERMEDIATE SENSOR** • Inspect the intermediate sensor. (See 05–17A–23 INTERMEDIATE SENSOR INSPECTION [FS5A-EL].) • Is intermediate sensor normal?	Yes	Go to the next step.
		No	Repair or replace the intermediate sensor, then go to the next step. (See 05–17A–25 INTERMEDIATE SENSOR REMOVAL/INSTALLATION [FS5A-EL].)
11	**VERIFY TROUBLESHOOTING OF DTC P0791 COMPLETED** • Make sure to reconnect all the disconnected connectors. • Clear the DTC from the memory using the WDS or equivalent. • Warm up engine. • Drive the vehicle under the following conditions for **4.5 s or more** while monitoring PIDs. — Engine coolant temp (ECT PID): **60 °C {140 °F} or more** — Drive in D range — Vehicle speed (VSS PID): **40 km/h {25 mph} or more** • Is the PENDING CODE present?	Yes	Replace the TCM, then go to the next step. (See 05–17A–38 TCM REMOVAL/INSTALLATION [FS5A-EL].)
		No	No concern is detected. Go to the next step.
12	**VERIFY AFTER REPAIR PROCEDURE** • Perform the "After Repair Procedure". (See 05–02A–4 AFTER REPAIR PROCEDURE [FS5A-EL].) • Are any DTCs present?	Yes	Go to the applicable DTC inspection.
		No	DTC troubleshooting completed.

DTC P0841 [FS5A-EL]

E6U050200000W97

DTC P0841	Oil pressure switch circuit malfunction
DETECTION CONDITION	• When DTC P0731, P0732, P0733 and P0734 are not output and **10 s or more** has passed. — When all the conditions below are satisfied while driving in 1GR, 2GR or 3GR • ATF temperature **20 °C {68 °F} or more** • Oil pressure switch OFF • Revolution ratio of forward clutch drum revolution to differential gear case revolution **within 0.91—3.07** • None of the following DTCs are present: P0706, P0707, P0708, P0712, P0713, P0715, P0720, P0751, P0752, P0753, P0756, P0757, P0758, P0761, P0762, P0763, P0766, P0767, P0768, P0771, P0772, P0773, P0791 — When all conditions below are satisfied while driving in 4GR or 5GR • ATF temperature **20 °C {68 °F} or more** • Oil pressure switch ON • Revolution ratio of forward clutch drum revolution to differential gear case revolution **within 0.64—0.81** • None of the following DTCs are present: P0706, P0707, P0708, P0712, P0713, P0715, P0720, P0751, P0752, P0753, P0756, P0757, P0758, P0761, P0762, P0763, P0766, P0767, P0768, P0771, P0772, P0773, P0791 **Diagnostic support note:** • This is a continuous monitor (CCM). • The MIL does not illuminates if the TCM detects the above malfunction condition in two consecutive drive cycles or in one drive cycle while the DTC for the same malfunction has been stored in the TCM. • A PENDING CODE is not available. • FREEZE FRAME DATA is not available. • The AT warning light does not illuminates. • The DTC is stored in the TCM memory.
POSSIBLE CAUSE	• ATF level low • Deteriorated ATF • Line pressure low • Oil pressure switch malfunction • Open circuit in wiring harness between oil pressure switch terminal A and TCM terminal 2J • Short to ground in wiring harness between oil pressure switch terminal A and TCM terminal 2J • Damaged connector between oil pressure switch and TCM • Control valve stuck • TCM malfunction

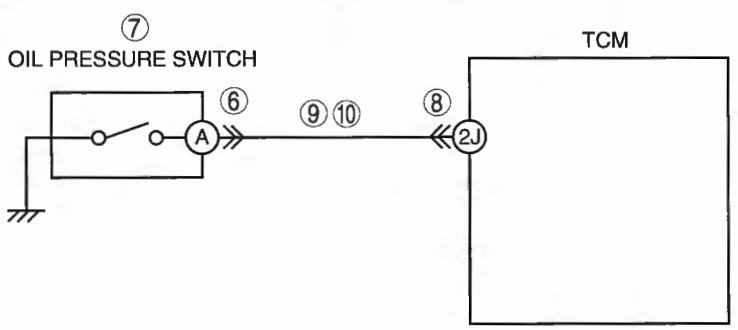

OIL PRESSURE SWITCH WIRING HARNESS-SIDE CONNECTOR

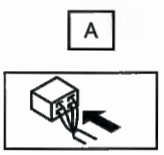

TCM WIRING HARNESS-SIDE CONNECTOR

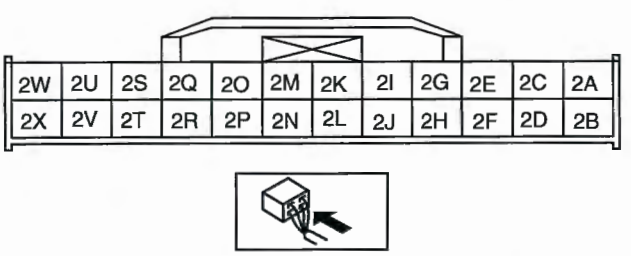

Diagnostic procedure

STEP	INSPECTION		ACTION
1	**VERIFY FREEZE FRAME DATA HAS BEEN RECORDED** • Has the FREEZE FRAME DATA been recorded?	Yes	Go to the next step.
		No	Record the FREEZE FRAME DATA on the repair order, then go to the next step.
2	**VERIFY RELATED SERVICE INFORMATION AVAILABILITY** • Verify related Service Bulletins and/or on-line repair information availability. • Is any related repair Information available?	Yes	Perform repair or diagnosis according to the available repair information. • If the vehicle is not repaired, go to the next step.
		No	Go to the next step.
3	**INSPECT ATF CONDITION** • Inspect the ATF condition. (See 05–17A–10 Automatic Transaxle Fluid (ATF) Condition Inspection.) • Is it normal?	Yes	Go to the next step.
		No	Replace the ATF, then go to Step 11.
4	**INSPECT ATF LEVEL** • Start the engine. • Warm up the ATX. • Is the ATF level within the specification? (See 05–17A–11 Automatic Transaxle Fluid (ATF) Level Inspection.)	Yes	Go to the next step.
		No	Add ATF to the specified level, then go to Step 11. (See 05–17A–11 Automatic Transaxle Fluid (ATF) Level Inspection.)
5	**INSPECT LINE PRESSURE** • Start the engine. • Measure the line pressures. (See 05–17A–5 Line Pressure Test.) • Are the line pressures within the specifications?	Yes	Go to the next step.
		No	All ranges: Replace the oil pump, then go to Step 11. Any ranges: Replace the primary control valve body, then go to Step 11. (See 05–17A–46 PRIMARY CONTROL VALVE BODY REMOVAL [FS5A-EL].) (See 05–17A–47 PRIMARY CONTROL VALVE BODY INSTALLATION [FS5A-EL].)
6	**INSPECT OIL PRESSURE SWITCH CONNECTOR FOR POOR CONNECTION** • Disconnect the shift oil pressure switch connector. • Inspect for poor connection (such as damaged/ pulled-out pins, corrosion). • Is the connection normal?	Yes	Go to the next step.
		No	Repair or replace the connector and/or terminals, then go to Step11.
7	**INSPECT CONTINUITY** • Inspect for continuity between oil pressure switch terminal A (part-side) and body ground. • Is there continuity?	Yes	Replace the oil pressure switch, then go to Step 11. (See 05–17A–22 OIL PRESSURE SWITCH REMOVAL/ INSTALLATION [FS5A-EL].)
		No	Go to the next step.
8	**INSPECT TCM CONNECTOR FOR POOR CONNECTION** • Disconnect the TCM connector. • Inspect for poor connection (such as damaged/ pulled-out pins, corrosion). • Is the connection normal?	Yes	Go to the next step.
		No	Repair or replace the connector and/or terminals, then go to Step 11.
9	**INSPECT OIL PRESSURE SWITCH CIRCUIT FOR OPEN CIRCUIT** • Inspect for continuity between TCM terminal 2J (wiring harness-side) and transaxle connector terminal A (wiring harness-side). • Is there continuity between terminals?	Yes	Go to the next step.
		No	Repair or replace the wiring harness, then go to Step 11.
10	**INSPECT TCM CIRCUIT FOR SHORT TO GROUND** • Turn the ignition switch to the LOCK position. • Inspect for continuity between TCM terminal 2J (wiring harness-side) and body ground. • Is there continuity?	Yes	Repair or replace the wiring harness, then go to the next step.
		No	Replace the oil pressure switch, then go to the next step. (See 05–17A–22 OIL PRESSURE SWITCH REMOVAL/ INSTALLATION [FS5A-EL].)

STEP	INSPECTION		ACTION
11	**VERIFY TROUBLESHOOTING OF DTC P0841 COMPLETED** • Make sure to reconnect all the disconnected connectors. • Clear the DTC from the memory using the WDS or equivalent. • Drive the vehicle and make sure that gears shift smoothly from 1GR to 5GR. • Are any DTCs present?	Yes	Replace the TCM, then go to the next step. (See 05–17A–38 TCM REMOVAL/INSTALLATION [FS5A-EL].)
		No	No concern is detected. Go to the next step.
12	**VERIFY AFTER REPAIR PROCEDURE** • Perform the "After Repair Procedure". (See 05–02A–4 AFTER REPAIR PROCEDURE [FS5A-EL].) • Are any DTCs present?	Yes	Go to the applicable DTC inspection.
		No	DTC troubleshooting completed.

DTC P0882 [FS5A-EL]

E6U050200000W98

DTC P0882	Battery back-up power supply circuit
DETECTION CONDITION	• When the signal of the battery back-up power supply circuit is **less than 2.5 V.** **Diagnostic support note:** • This is a continuous monitor (CCM). • The MIL does not illuminate if the TCM detects the above malfunction condition during the first drive cycle. • The PENDING CODE is available if the TCM detects the above malfunction condition during the first drive cycle. • FREEZE FRAME DATA is available. • The AT warning light not illuminates. • The DTC is stored in the TCM memory.
POSSIBLE CAUSE	• Melted ENG+B 10 A fuse • Open circuit in wiring harness between battery positive terminal and TCM terminal 1K • Short to ground in wiring harness between battery positive terminal and TCM terminal 1K • Poor connection of TCM connector • TCM malfunction

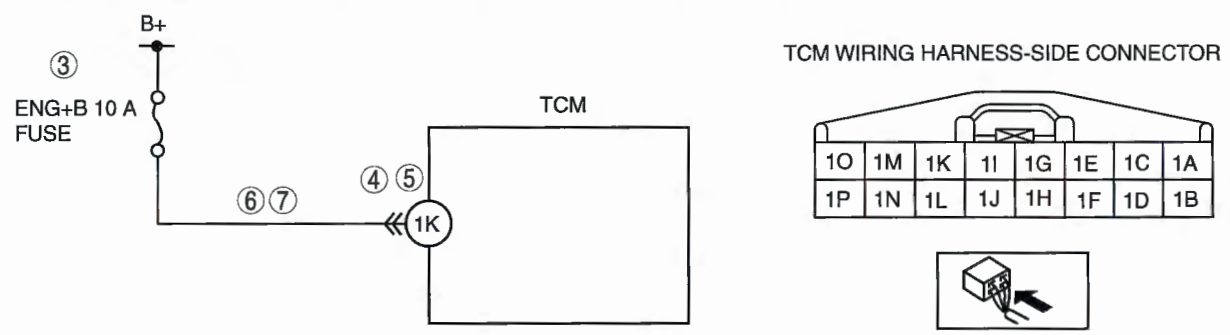

Diagnostic procedure

STEP	INSPECTION		ACTION
1	**VERIFY FREEZE FRAME DATA HAS BEEN RECORDED** • Has the FREEZE FRAME DATA been recorded?	Yes	Go to the next step.
		No	Record the FREEZE FRAME DATA on the repair order, then go to the next step.
2	**VERIFY RELATED REPAIR INFORMATION AVAILABILITY** • Verify related Service Bulletins and or/on-line repair information availability. • Is any related repair information available?	Yes	Perform repair or diagnosis according to the available repair information. • If the vehicle is not repaired, go to the next step.
		No	Go to the next step.
3	**INSPECT FUSE** • Turn the ignition switch to the LOCK position. • Inspect ENG+B 10 A fuse malfunction. • Is it normal?	Yes	Go to the next step.
		No	• If fuse has been melted, go to the next step. • If fuse is not installed correctly, install it correctly, then go to Step 13.
4	**INSPECT VOLTAGE OF POWER SUPPLY CIRCUIT** • Turn the ignition switch to the ON position (engine off). • Inspect for voltage TCM connector terminal 1K (wiring harness-side). • Is the voltage **B+**?	Yes	Go to the next step.
		No	Go go to Step 6.
5	**INSPECT TERMINAL TCM CONNECTOR FOR POOR CONNECTION** • Turn the ignition switch to the LOCK position. • Disconnect the negative battery cable. • Disconnect the TCM connector. • Inspect for poor connection (such as damaged/ pulled-out pins, corrosion). • Are terminals normal?	Yes	Go go to Step 8.
		No	Replace the couple component, then go to Step 8.
6	**INSPECT POWER SUPPLY CIRCUIT FOR SHORT TO GROUND** • Disconnect the positive battery cable. • Inspect for continuity between the TCM terminal 1K and body ground. • Is there continuity?	Yes	Repair or replace the wiring harness, then go to Step 8.
		No	Go to the next step.
7	**INSPECT POWER SUPPLY CIRCUIT FOR OPEN CIRCUIT** • Inspect for continuity between TCM terminal 1K and ENG+B 10 A fuse terminal (wiring harness-side). • Is there continuity?	Yes	Go to the next step.
		No	Repair or replace the harness, then go to the next step.
8	**VERIFY TROUBLESHOOTING OF DTC P0882 COMPLETED** • Make sure to reconnect all the disconnected connectors. • Clear the DTC from the memory using the WDS or equivalent. • Start the engine and warm it up completely. • Is same DTC present?	Yes	Replace the TCM, then go to the next step. (See 05–17A–38 TCM REMOVAL/INSTALLATION [FS5A-EL].)
		No	Go to the next step.
9	**VERIFY AFTER REPAIR PROCEDURE** • Perform the "After Repair Procedure". (See 05–02A–4 AFTER REPAIR PROCEDURE [FS5A-EL].) • Are any DTCs present?	Yes	Go to the applicable DTC inspection. (See 05–02A–8 DTC TABLE [FS5A-EL].)
		No	Troubleshooting completed.

DTC P0894 [FS5A-EL]

E6U050200000W99

DTC P0894	Forward clutch power transmission malfunction
DETECTION CONDITION	• With the engine running, all of the following conditions are met: — ATF temperature **20 °C {68 °F} or more** — Vehicle speed **0 km/h {0 mph}** (brake on) — Even when 3 s or more have passed since the selector lever was shifted from the N position to the D range, the turbine speed will not decrease to less than 187 rpm. **Diagnostic support note:** • This is a continuous monitor (CCM). • The MIL does not illuminate if the TCM detects above malfunction conditions during the first drive cycle. • A PENDING CODE is not available. • FREEZE FRAME DATA is not available. • The AT warning light illuminates. • DTCs are stored in the TCM memory.
POSSIBLE CAUSE	• Forward clutch not engaged or slipped • Short to power supply in wiring harness between shift solenoid A terminal B and TCM terminal 1A • Shift solenoid A stuck on • VSS malfunction • TCM malfunction

Diagnostic procedure

STEP	INSPECTION		ACTION
1	**VERIFY FREEZE FRAME DATA HAS BEEN RECORDED** • Has the FREEZE FRAME DATA been recorded?	Yes	Go to the next step.
		No	Record the FREEZE FRAME DATA on the repair order, then go to the next step.
2	**VERIFY DTCS** • Turn the ignition switch to the LOCK position, then to the ON position. • Verify the DTCs in the TCM memory. • Are DTCs P0720, P0752, and P0753 output?	Yes	Go to the applicable DTC inspection.
		No	Replace the forward clutch, then go to the next step.
3	**VERIFY TROUBLESHOOTING OF DTC P0894 COMPLETED** • Make sure to reconnect all the disconnected connectors. • Clear the DTC from the memory using the WDS or equivalent. • Warm up the engine. • With the selector lever in the D range and the vehicle stopped (brake on), wait **3 s or more**. • Are any DTCs present?	Yes	Replace the TCM, then go to the next step. (See 05–17A–38 TCM REMOVAL/INSTALLATION [FS5A-EL].)
		No	No concern is detected. Go to the next step.
4	**VERIFY AFTER REPAIR PROCEDURE** • Perform the "After Repair Procedure". (See 05–02A–4 AFTER REPAIR PROCEDURE [FS5A-EL].) • Are any DTCs present?	Yes	Go to the applicable DTC inspection.
		No	DTC troubleshooting completed.

DTC P1783 [FS5A-EL]

E6U050200000WA0

DTC P1783	ATF high oil temperature malfunction
DETECTION CONDITION	• When all conditions below are satisfied. — P0712, P0713 not output — ATF temperature **149.5 °C {301°F} or more** — ATF oil temperature signal of **0.06 V or more** is input to TCM terminal 2H. **Diagnostic support note:** • This is a continuous monitor (CCM). • The MIL does not illuminate if the TCM detects above malfunction conditions during the first drive cycle. • The PENDING CODE is not available. • FREEZE FRAME DATA is not available. • The AT warning light illuminates. • The DTC is stored in the TCM memory.
POSSIBLE CAUSE	• High engine load drive (Driving a steep gradient at a low speed.) • Insufficient or excess level of ATF • Deteriorated ATF • TFT sensor circuit malfunction • TCM malfunction

Diagnostic procedure

STEP	INSPECTION		ACTION
1	**VERIFY FREEZE FRAME DATA HAS BEEN RECORDED** • Has the FREEZE FRAME DATA been recorded?	Yes	Go to the next step.
		No	Record the FREEZE FRAME DATA on the repair order, then go to the next step.
2	**VERIFY RELATED REPAIR INFORMATION AVAILABILITY** • Verify related Service Bulletins and/or on-line repair information availability. • Is any related repair information available?	Yes	Perform repair or diagnosis according to the available repair information. • If the vehicle is not repaired, go to the next step.
		No	Go to the next step.
3	**VERIFY VEHICLE DRIVING CONDITIONS** • Verify each PID monitor of the HTM_CNT and HTM_DIS. • Verify vehicle driving conditions when a DTC P1783 is output. • Has the vehicle been driven at a high engine load?	Yes	• Go to Step 6. • Inform the customer that the ATX temperature is high due to high engine load driving.
		No	Go to the next step.
4	**INSPECT ATF CONDITION** • Turn the ignition switch to the LOCK position. • Inspect the ATF condition. — Clear red: Normal — Milky: Water mixed in fluid — Reddish brown: Deteriorated ATF • Is it normal? (See 05–17A–10 Automatic Transaxle Fluid (ATF) Condition Inspection.)	Yes	Go to the next step.
		No	If the ATF color is milky or reddish brown, replace ATF, then go to Step 6. (See 05–17A–12 AUTOMATIC TRANSAXLE FLUID (ATF) REPLACEMENT [FS5A-EL].)
5	**INSPECT ATF LEVEL** • Start the engine. • Warm up the ATX. • Is the ATF level within the specification? (See 05–17A–11 Automatic Transaxle Fluid (ATF) Level Inspection.)	Yes	Go to the next step.
		No	Add ATF to the specified level, then go to the next step. (See 05–17A–11 Automatic Transaxle Fluid (ATF) Level Inspection.)
6	**VERIFY TROUBLESHOOTING OF DTC P1783 COMPLETED** • Make sure to reconnect all the disconnected connectors. • Clear the DTC from the memory using the WDS or equivalent. • Start the engine. • Warm up the ATX. • Is the PENDING CODE present?	Yes	Replace the TCM, then go to the next step. (See 05–17A–38 TCM REMOVAL/INSTALLATION [FS5A-EL].)
		No	Go to the next step.
7	**VERIFY AFTER REPAIR PROCEDURE** • Perform the "After Repair Procedure". (See 05–02A–4 AFTER REPAIR PROCEDURE [FS5A-EL].) • Are any DTCs present?	Yes	Go to the applicable DTC inspection.
		No	DTC troubleshooting completed.

DTC P2707 [FS5A-EL]

E6U050200000WA1

DTC P2707	Shift solenoid F stuck off
DETECTION CONDITION	• When all conditions below are satisfied. — ATF temperature **20 °C {68 °F} or more** — Turbine speed **within 225—4,987 rpm** — Secondary gear revolution speed **50 rpm or more** — Differential gear case (output) revolution speed **35 rpm or more** — Throttle opening angle **4.14% or more** — None of the following DTCs are present: P0706, P0707, P0708, P0712, P0713, P0715, P0720, P0777, P0778, P0791, P2708, P2709 — Revolution ratio of the secondary gear and the differential gear case is **1.11 or less** when driving in 3GR or 4GR. **Diagnostic support note:** • This is a continuous monitor (CCM). • The MIL illuminates if the TCM detects the above malfunction condition in two consecutive drive cycles or in one drive cycle while the DTC for the same malfunction has been stored in the TCM. • The PENDING CODE is available if the TCM detects the above malfunction condition during the first drive cycle. • FREEZE FRAME DATA is available. • The AT warning light illuminates. • The DTC is stored in the TCM memory.
POSSIBLE CAUSE	• ATF level low • Deteriorated ATF • Shift solenoid F stuck off • Secondary control valve stuck • TCM malfunction

Diagnostic procedure

STEP	INSPECTION		ACTION
1	**VERIFY FREEZE FRAME DATA HAS BEEN RECORDED** • Has the FREEZE FRAME DATA been recorded?	Yes	Go to the next step.
		No	Record the FREEZE FRAME DATA on the repair order, then go to the next step.
2	**VERIFY RELATED REPAIR INFORMATION AVAILABILITY** • Verify related Service Bulletins and/or on-line repair information availability. • Is any related repair information available?	Yes	Perform repair or diagnosis according to the available repair information. • If the vehicle is not repaired, go to the next step.
		No	Go to the next step.
3	**INSPECT ATF CONDITION** • Turn the ignition switch to the LOCK position. • Inspect the ATF condition. — Clear red: Normal — Milky: Water mixed in fluid — Reddish brown: Deteriorated ATF • Is it normal? (See 05–17A–10 Automatic Transaxle Fluid (ATF) Condition Inspection.)	Yes	Go to the next step.
		No	If the ATF color is milky or reddish brown, replace ATF, then go to Step 5. (See 05–17A–12 AUTOMATIC TRANSAXLE FLUID (ATF) REPLACEMENT [FS5A-EL].)
4	**INSPECT ATF LEVEL** • Start the engine. • Warm up the ATX. • Is the ATF level within the specification? (See 05–17A–11 Automatic Transaxle Fluid (ATF) Level Inspection.)	Yes	Go to the next step.
		No	Add ATF to the specified level, then go to Step 7. (See 05–17A–11 Automatic Transaxle Fluid (ATF) Level Inspection.)
5	**INSPECT LINE PRESSURE** • Start the engine. • Measure the line pressures. (See 05–17A–5 Line Pressure Test.) • Are the line pressures within the specifications?	Yes	Go to the next step.
		No	• All ranges: Replace the oil pump or control valve body, then go to Step 7. • Any ranges: Replace the automatic transaxle, then go to Step 7. (See 05–17A–39 AUTOMATIC TRANSAXLE REMOVAL/INSTALLATION [FS5A-EL].) (See ATX Workshop Manual FS5A-EL.)
6	**INSPECT OPERATION OF EACH VALVE AND EACH SPRING** • Turn the ignition switch to the LOCK position. • Remove the secondary control valve body. • Disassemble the secondary control valve body. • Is each valve operation normal and is the return spring normal? (See 05–17A–48 SECONDARY CONTROL VALVE BODY REMOVAL [FS5A-EL].) (See 05–17A–49 SECONDARY CONTROL VALVE BODY INSTALLATION [FS5A-EL].) (See ATX Workshop Manual FS5A-EL.)	Yes	Replace the automatic transaxle, then go to the next step. (See 05–17A–39 AUTOMATIC TRANSAXLE REMOVAL/INSTALLATION [FS5A-EL].) (See ATX Workshop Manual FS5A-EL.)
		No	Repair or replace the shift valve and return spring, then go to the next step. (See 05–17A–48 SECONDARY CONTROL VALVE BODY REMOVAL [FS5A-EL].) (See 05–17A–49 SECONDARY CONTROL VALVE BODY INSTALLATION [FS5A-EL].) (See ATX Workshop Manual FS5A-EL.)
7	**VERIFY TROUBLESHOOTING OF DTC P2707 COMPLETED** • Make sure to reconnect all the disconnected connectors. • Clear the DTC from the memory using the WDS or equivalent. • Start the engine. • Warm up the ATX. • Drive the vehicle under the following conditions and make sure that gears shift smoothly from 1GR to 5GR: — ATF temperature (TFT PID): **20 °C {68 °F} or more** — Drive in the D range, 4GR — Throttle opening angle (THOP PID): **4.14% or more** • Is the PENDING CODE present?	Yes	Replace the TCM, then go to the next step. (See 05–17A–38 TCM REMOVAL/INSTALLATION [FS5A-EL].)
		No	Go to the next step.
8	**VERIFY AFTER REPAIR PROCEDURE** • Perform the "After Repair Procedure". (See 05–02A–4 AFTER REPAIR PROCEDURE [FS5A-EL].) • Are any DTCs present?	Yes	Go to the applicable DTC inspection.
		No	DTC troubleshooting completed.

DTC P2708 [FS5A-EL]

E6U050200000WA2

DTC P2708	Shift solenoid F stuck on
DETECTION CONDITION	• When all conditions below are satisfied. — ATF temperature **20 °C {68 °F} or more** — Turbine speed **within 225—4,987 rpm** — Secondary gear revolution speed **50 rpm or more** — Differential gear case (output) revolution speed **35 rpm or more** — Throttle opening angle **4.14% or more** — None of the following DTCs are present: P0706, P0707, P0708, P0712, P0713, P0715, P0720, P0777, P0778, P0791, P2707, P2709 — Revolution ratio of the secondary gear and differential gear case is **1.11 or more** when driving in 5GR. **Diagnostic support note:** • This is a continuous monitor (CCM). • The MIL illuminates if the TCM detects the above malfunction condition in two consecutive drive cycles or in one drive cycle while the DTC for the same malfunction has been stored in the TCM. • The PENDING CODE is available if the TCM detects the above malfunction condition during the first drive cycle. • FREEZE FRAME DATA is available. • The AT warning light illuminates. • The DTC is stored in the TCM memory.
POSSIBLE CAUSE	• ATF level low • Deteriorated ATF • Shift solenoid F stuck on • Secondary control valve stuck • TCM malfunction

Diagnostic procedure

STEP	INSPECTION		ACTION
1	**VERIFY FREEZE FRAME DATA HAS BEEN RECORDED** • Has the FREEZE FRAME DATA been recorded?	Yes	Go to the next step.
		No	Record the FREEZE FRAME DATA on the repair order, then go to the next step.
2	**VERIFY RELATED REPAIR INFORMATION AVAILABILITY** • Verify related Service Bulletins and/or on-line repair information availability. • Is any related repair information available?	Yes	Perform repair or diagnosis according to the available repair information. • If the vehicle is not repaired, go to the next step.
		No	Go to the next step.
3	**INSPECT ATF CONDITION** • Turn the ignition switch to the LOCK position. • Inspect the ATF condition. — Clear red: Normal — Milky: Water mixed in fluid — Reddish brown: Deteriorated ATF • Is it normal? (See 05–17A–10 Automatic Transaxle Fluid (ATF) Condition Inspection.)	Yes	Go to the next step.
		No	If the ATF color is milky or reddish brown, replace ATF, then go to Step 5. (See 05–17A–12 AUTOMATIC TRANSAXLE FLUID (ATF) REPLACEMENT [FS5A-EL].)
4	**INSPECT ATF LEVEL** • Start the engine. • Warm up the ATX. • Is the ATF level within the specification? (See 05–17A–11 Automatic Transaxle Fluid (ATF) Level Inspection.)	Yes	Go to the next step.
		No	Add ATF to the specified level, then go to Step 7. (See 05–17A–11 Automatic Transaxle Fluid (ATF) Level Inspection.)
5	**INSPECT LINE PRESSURE** • Start the engine. • Measure the line pressures. (See 05–17A–5 Line Pressure Test.) • Are the line pressures within the specifications?	Yes	Go to the next step.
		No	• All ranges: Replace the oil pump or control valve body, then go to Step 7. • Any ranges: Replace the automatic transaxle, then go to Step 7. (See 05–17A–39 AUTOMATIC TRANSAXLE REMOVAL/INSTALLATION [FS5A-EL].) (See ATX Workshop Manual FS5A-EL.)
6	**INSPECT OPERATION OF EACH VALVE AND EACH SPRING** • Turn the ignition switch to the LOCK position. • Remove the secondary control valve body. • Disassemble the secondary control valve body. • Is each valve operation normal and is the return spring normal? (See 05–17A–48 SECONDARY CONTROL VALVE BODY REMOVAL [FS5A-EL].) (See 05–17A–49 SECONDARY CONTROL VALVE BODY INSTALLATION [FS5A-EL].) (See ATX Workshop Manual FS5A-EL.)	Yes	Replace the automatic transaxle, then go to the next step. (See 05–17A–39 AUTOMATIC TRANSAXLE REMOVAL/INSTALLATION [FS5A-EL].) (See ATX Workshop Manual FS5A-EL.)
		No	Repair or replace the shift valve and return spring, then go to the next step. (See 05–17A–48 SECONDARY CONTROL VALVE BODY REMOVAL [FS5A-EL].) (See 05–17A–49 SECONDARY CONTROL VALVE BODY INSTALLATION [FS5A-EL].) (See ATX Workshop Manual FS5A-EL.)
7	**VERIFY TROUBLESHOOTING OF DTC P2708 COMPLETED** • Make sure to reconnect all the disconnected connectors. • Clear the DTC from the memory using the WDS or equivalent. • Start the engine. • Warm up the ATX. • Drive the vehicle under the following conditions and make sure that gears shift smoothly from 1GR to 5GR. — ATF temperature (TFT PID): **20 °C {68 °F} or more** — Drive in the D range, 5GR — Throttle opening angle (THOP PID): **4.14% or more** • Is the PENDING CODE present?	Yes	Replace the TCM, then go to the next step. (See 05–17A–38 TCM REMOVAL/INSTALLATION [FS5A-EL].)
		No	Go to the next step.
8	**VERIFY AFTER REPAIR PROCEDURE** • Perform the "After Repair Procedure". (See 05–02A–4 AFTER REPAIR PROCEDURE [FS5A-EL].) • Are any DTCs present?	Yes	Go to the applicable DTC inspection.
		No	DTC troubleshooting completed.

DTC P2709 [FS5A-EL]

E6U050200000WA3

DTC P2709	Shift solenoid F malfunction (electrical)
DETECTION CONDITION	• If TCM detects either of the following conditions while driving in 5GR at D range, the TCM determines that shift solenoid F circuit has a malfunction. — Shift solenoid F voltage stuck at **B+** after engine start — Shift solenoid F voltage stuck at **0 V** after engine start **Diagnostic support note:** • This is a continuous monitor (CCM). • The MIL illuminates if the TCM detects the above malfunction conditions during the first drive cycle. • The PENDING CODE is available if the TCM detects the above malfunction condition during the first drive cycle. • FREEZE FRAME DATA is available. • The AT warning light illuminates. • The DTC is stored in the TCM memory.
POSSIBLE CAUSE	• Shift solenoid F malfunction • Short to ground in wiring harness between transaxle connector (secondary) terminal B and TCM terminal 1J • Short to power supply in wiring harness between transaxle connector (secondary) terminal B and TCM terminal 1J • Open circuit in wiring harness between shift solenoid F terminal A and transaxle connector (secondary) terminal B • Open circuit in wiring harness between transaxle connector (secondary) terminal B and TCM terminal 1J • Damaged connector between shift solenoid F and TCM • TCM malfunction

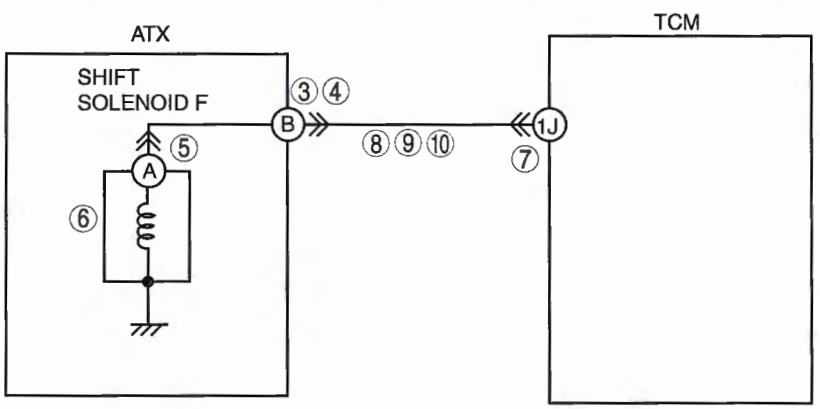

SHIFT SOLENOID F WIRING HARNESS-SIDE CONNECTOR

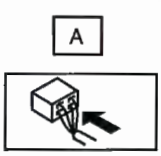

TRANSAXLE CONNECTOR (SECONDARY) WIRING HARNESS-SIDE CONNECTOR

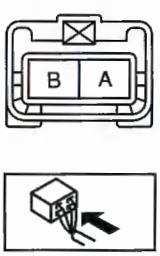

TCM WIRING HARNESS-SIDE CONNECTOR

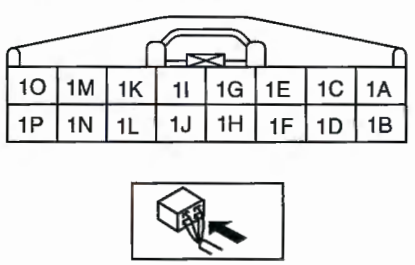

Diagnostic procedure

STEP	INSPECTION		ACTION
1	**VERIFY FREEZE FRAME DATA HAS BEEN RECORDED** • Has the FREEZE FRAME DATA been recorded?	Yes	Go to the next step.
		No	Record the FREEZE FRAME DATA on the repair order, then go to the next step.
2	**VERIFY RELATED REPAIR INFORMATION AVAILABILITY** • Verify related Service Bulletins and/or on-line repair information availability. • Is any related repair information available?	Yes	Perform repair or diagnosis according to the available repair information. • If the vehicle is not repaired, go to the next step.
		No	Go to the next step.

STEP	INSPECTION		ACTION
3	**INSPECT TRANSAXLE CONNECTOR FOR POOR CONNECTION** • Turn the ignition switch to the LOCK position. • Disconnect the transaxle connector (secondary). • Inspect for poor connection (such as damaged/ pulled-out pins, corrosion). • Is the connection normal?	Yes	Go to the next step.
		No	Repair or replace the connector and/or terminals, then go to Step 11.
4	**INSPECT RESISTANCE** • Inspect the resistance between transaxle connector (secondary) terminal B (transaxle case side) and body ground. • Is the resistance **within 10.9—26.2 ohms**? (See 05–17A–31 Resistance Inspection (On-Vehicle Inspection).)	Yes	Go to Step 7.
		No	Go to the next step.
5	**INSPECT SHIFT SOLENOID D CONNECTOR FOR POOR CONNECTION** • Disconnect the shift solenoid F connector. • Inspect for poor connection (such as damaged/ pulled-out pins, corrosion). • Is the connection normal?	Yes	Go to the next step.
		No	Repair or replace the connector and/or terminals, then go to Step 11.
6	**INSPECT RESISTANCE** • Inspect the resistance between shift solenoid F terminal A (part-side) and body ground. • Is the resistance **within 10.9—26.2 ohms**? (See 05–17A–31 Resistance Inspection (On-Vehicle Inspection).)	Yes	Replace the solenoid wiring harness, then go to Step 11.
		No	Verify shift solenoid F installation. • If solenoid installed correctly, replace the solenoid, then go to Step 11. (See 05–17A–32 SOLENOID VALVE REMOVAL/ INSTALLATION (SECONDARY CONTROL VALVE BODY) [FS5A-EL].)
7	**INSPECT TCM CONNECTOR FOR POOR CONNECTION** • Disconnect the TCM connector. • Inspect for poor connection (such as damaged/ pulled-out pins, corrosion). • Is the connection normal?	Yes	Go to the next step.
		No	Repair or replace the connector and/or terminals, then go to Step 11.
8	**INSPECT TRANSAXLE CONNECTOR CIRCUIT FOR OPEN CIRCUIT** • Inspect for continuity between TCM terminal 1J (wiring harness-side) and transaxle connector (secondary) terminal B (wiring harness-side). • Is there continuity between terminals?	Yes	Go to the next step.
		No	Repair or replace the wiring harness, then go to Step 11.
9	**INSPECT TRANSAXLE CONNECTOR CIRCUIT FOR SHORT TO POWER SUPPLY** • Turn the ignition switch to the ON position (engine off). • Inspect the voltage at transaxle connector (secondary) terminal B (wiring harness-side). • Is the voltage **0 V**?	Yes	Go to the next step.
		No	Repair or replace the wiring harness, then go to Step 11.
10	**INSPECT TCM CIRCUIT FOR SHORT TO GROUND** • Turn the ignition switch to the LOCK position. • Inspect for continuity between TCM terminal 1J (wiring harness-side) and body ground. • Is there continuity?	Yes	Repair or replace the wiring harness, then go to Step 11.
		No	Go to the next step.
11	**VERIFY TROUBLESHOOTING OF DTC P2709 COMPLETED** • Make sure to reconnect all the disconnected connectors. • Clear the DTC from the memory using the WDS or equivalent. • Drive the vehicle in D range and make sure that gears shift smoothly from 1GR to 5GR. • Are any DTCs present?	Yes	Replace the TCM, then go to the next step. (See 05–17A–38 TCM REMOVAL/INSTALLATION [FS5A-EL].)
		No	No concern is detected. Go to the next step.
12	**VERIFY AFTER REPAIR PROCEDURE** • Perform the "After Repair Procedure". (See 05–02A–4 AFTER REPAIR PROCEDURE [FS5A-EL].) • Are any DTCs present?	Yes	Go to the applicable DTC inspection.
		No	DTC troubleshooting completed.

PID/DATA MONITOR INSPECTION [FS5A-EL]

E6U050200000WA4

1. Connect the WDS or equivalent to the DLC-2.
2. Measure the PID value.

Note

- Perform part inspection for the output device after TCM inspection.
- The PID/DATA MONITOR function monitors the calculated value of the input/output signals in the TCM. Therefore, if a monitored value of an output device is out of specification, it is necessary to inspect the monitored value of the input device related to the output device control. Since an output device malfunction is not directly indicated as a malfunction of the monitored value for the output device, it is necessary to inspect the output device individually using methods such as the simulation function.

PID/DATA MONITOR AND RECORD function table

Monitor item (Definition)	Unit/ Condition	Condition/Specification	Action	TCM terminal
DTCCNT (Number of DTC detected)	—	• DTCs is detected: 1—255 • No DTCs are detected: 0	Perform applicable DTC troubleshooting. (See 05–02A–8 DTC TABLE [FS5A-EL].)	N/A
DWN SW (Down switch)	On/Off	• M range, downshift: On • Other: Off	Inspect the selector lever component. (See 05–18–6 SELECTOR LEVER COMPONENT INSPECTION.)	2F
ECT TCM (ECT sensor)	°C / °F	Indicates engine coolant temperature	Inspect the ECT sensor. (See 01–40A–35 ENGINE COOLANT TEMPERATURE (ECT) SENSOR INSPECTION [L3].) Inspect the PCM (See 01–40A–9 PCM INSPECTION [L3].)	N/A
GEAR_SEL	1/2/3/4/5	• 1GR: 1 • 2GR: 2 • 3GR: 3 • 4GR: 4 • 5GR: 5	Inspect the following PIDs: SSA/SS1, SSB/SS2, SSC/SS3, SSD/SS4, SSD_SS5, SSF_SS6	N/A
HTM_CNT	—	Indicates number of high oil temperature mode (ATF temperature at 130 °C {266 °F} or more) operations • 0—255	N/A	N/A
HTM_DIS	km	Indicates travel distance after operation of high oil temperature mode (ATF temperature at 130 °C {266 °F} or more) • 0—2550 km	N/A	N/A
ISS (Intermediate shaft speed)	RPM	Indicates secondary gear revolution speed • Vehicle speed **0 km/h {0 mph}**: **0 RPM** • Vehicle speed **25 km/h {16 mph}**: **200—230 RPM**	Inspect the intermediate sensor. (See 05–17A–23 INTERMEDIATE SENSOR INSPECTION [FS5A-EL].)	2L
LINEDES	kPa / inHg	Indicates target line pressure	Inspect the following PIDs: ISS, OSS, TFT, TFTV, THOP, TR, TSS	N/A
LPS (Pressure control solenoid A)	A	Change current value according to throttle opening angle	Inspect the pressure control solenoid A. (See 05–17A–28 SOLENOID VALVE INSPECTION (PRIMARY CONTROL VALVE BODY) [FS5A-EL].)	1E, 1G
LPS B (Pressure control solenoid B)	%	• 4GR→ 5GR: **99%** • others: **0%**	Inspect the pressure control solenoid B. (See 05–17A–31 SOLENOID VALVE INSPECTION (SECONDARY CONTROL VALVE BODY) [FS5A-EL].)	1D
MNL SW (M range switch)	On/Off	• M range: On • Other: Off	Inspect the selector lever component. (See 05–18–6 SELECTOR LEVER COMPONENT INSPECTION.)	2B
OP_SW_B (Oil pressure switch)	On/Off	• 1GR, 2GR or 3GR: On • Other: Off	Inspect the oil pressure switch. (See 05–17A–21 OIL PRESSURE SWITCH INSPECTION [FS5A-EL].)	2J
OSS (Output shaft speed)	RPM	Indicates output shaft speed • Vehicle speed **0 km/h {0 mph}**: **0 RPM** • Vehicle speed 25 km/h {16 mph}: **200—230 RPM**	Inspect the VSS. (See 05–17A–25 VEHICLE SPEED SENSOR (VSS) INSPECTION [FS5A-EL].)	2P

Monitor item (Definition)	Unit/ Condition	Condition/Specification	Action	TCM terminal
RPM_TCM (Engine speed)	RPM	Ignition switch ON: **0 RPM** Idle: **700—800 RPM**	Inspect the TCM. (See 05–17A–33 TCM INSPECTION [FS5A-EL].)	N/A
SSA/SS1 (Shift solenoid A)	%	• 4GR: **99%** • others: **0%**	Inspect the shift solenoid A. (See 05–17A–28 SOLENOID VALVE INSPECTION (PRIMARY CONTROL VALVE BODY) [FS5A-EL].)	1A
SSB/SS2 (Shift solenoid B)	%	• 1GR at D range: **99%** • Others: **0%**	Inspect the shift solenoid B. (See 05–17A–28 SOLENOID VALVE INSPECTION (PRIMARY CONTROL VALVE BODY) [FS5A-EL].)	1B
SSC/SS3 (Shift solenoid C)	%	• 1GR/2GR: **99%** • Others: **0%**	Inspect the shift solenoid C. (See 05–17A–28 SOLENOID VALVE INSPECTION (PRIMARY CONTROL VALVE BODY) [FS5A-EL].)	1C
SSD/SS4 (Shift solenoid D)	On/Off	• P/N position, 4GR at D range, 1GR at M range: On • Others: Off	Inspect the shift solenoid D. (See 05–17A–28 SOLENOID VALVE INSPECTION (PRIMARY CONTROL VALVE BODY) [FS5A-EL].)	1F
SSE_SS5 (Shift solenoid E)	On/Off	• TCC operating: On • TCC non operating: Off	Inspect the shift solenoid E. (See 05–17A–28 SOLENOID VALVE INSPECTION (PRIMARY CONTROL VALVE BODY) [FS5A-EL].)	1H
SSF_SS6 (Shift solenoid F)	On/Off	• 1GR/2GR/3GR/4GR: On • 5GR: Off	Inspect the shift solenoid F. (See 05–17A–31 SOLENOID VALVE INSPECTION (SECONDARY CONTROL VALVE BODY) [FS5A-EL].)	1J
TFT (Transaxle fluid temperature)	°C / °F	Indicates transaxle fluid temperature	Inspect the TFT sensor. (See 05–17A–18 TRANSAXLE FLUID TEMPERATURE (TFT) SENSOR INSPECTION [FS5A-EL].)	2M
TFTV (Transaxle fluid signal voltage)	V	• ATF **20 °C {68 °F}: Approx. 3.3 V** • ATF **40 °C {104 °F}: Approx. 2.4 V** • ATF **60 °C {140 °F}: Approx. 1.5 V**	Inspect the TFT sensor. (See 05–17A–18 TRANSAXLE FLUID TEMPERATURE (TFT) SENSOR INSPECTION [FS5A-EL].)	2M
THOP (Throttle position sensor)	%	• CTP: **12%** • WOT: **75%**	Inspect the TP sensor. (See 01–40A–30 THROTTLE POSITION (TP) SENSOR INSPECTION [L3].)	N/A
TR (Transaxle range)	P/R/N/D	• P position: P • R position: R • N position: N • D range: D	Inspect the TR switch. (See 05–17A–12 TRANSAXLE RANGE (TR) SWITCH INSPECTION [FS5A-EL].)	2H
TR_SENS (TR switch)	V	• P position: **4.34—4.79 V** • R position: **3.83—4.18 V** • N position: **3.05—3.50 V** • D range: **2.23—2.66 V**	Inspect the TR switch. (See 05–17A–12 TRANSAXLE RANGE (TR) SWITCH INSPECTION [FS5A-EL].)	2H
TSS (Input/turbine speed)	RPM	Indicates Input/turbine speed • Ignition switch ON: **0 RPM** • Idle: **700—800 RPM** (P, N position)	Inspect the input/turbine speed sensor. (See 05–17A–22 INPUT/TURBINE SPEED SENSOR INSPECTION [FS5A-EL].)	2I, 2K
UP SW (Up switch)	On/Off	• M range, upshift: On • Other: Off	Inspect the selector lever component. (See 05–18–6 SELECTOR LEVER COMPONENT INSPECTION.)	2D
VPWR_TCM (Battery voltage)	V	B+	Inspect the main relay. (See 09–21–7 RELAY INSPECTION.)	1K
VSS (Vehicle speed)	KPH	• Vehicle speed **20 km/h {12.5 mph}: 20 KPH** • Vehicle speed **40 km/h {25 mph}: 40 KPH**	Inspect the VSS. (See 05–17A–25 VEHICLE SPEED SENSOR (VSS) INSPECTION [FS5A-EL].)	2P

05–02B ON-BOARD DIAGNOSTIC [AW6A-EL]

AUTOMATIC TRANSAXLE CONTROL SYSTEM WIRING DIAGRAM [AW6A-EL]..... 05–02B–2
FOREWORD [AW6A-EL] 05–02B–3
AUTOMATIC TRANSAXLE ON-BOARD DIAGNOSTIC FUNCTION [AW6A-EL]..... 05–02B–3
DTC Reading Procedure 05–02B–3
AFTER REPAIR PROCEDURE [AW6A-EL]..... 05–02B–4
DTC TABLE [AW6A-EL] 05–02B–5
DTC P0601 [AW6A-EL]..... 05–02B–8
DTC P0603 [AW6A-EL]..... 05–02B–9
DTC P0604 [AW6A-EL]..... 05–02B–10
DTC P0706 [AW6A-EL]..... 05–02B–11
DTC P0707 [AW6A-EL]..... 05–02B–12
DTC P0708 [AW6A-EL]..... 05–02B–13
DTC P0711 [AW6A-EL]..... 05–02B–14
DTC P0712 [AW6A-EL]..... 05–02B–16
DTC P0713 [AW6A-EL]..... 05–02B–18
DTC P0717 [AW6A-EL]..... 05–02B–20
DTC P0722 [AW6A-EL]..... 05–02B–22
DTC P0729 [AW6A-EL]..... 05–02B–24
DTC P0730 [AW6A-EL]..... 05–02B–26
DTC P0731 [AW6A-EL]..... 05–02B–28
DTC P0732 [AW6A-EL]..... 05–02B–30
DTC P0733 [AW6A-EL]..... 05–02B–32
DTC P0734 [AW6A-EL]..... 05–02B–34
DTC P0735 [AW6A-EL]..... 05–02B–36
DTC P0736 [AW6A-EL]..... 05–02B–38
DTC P0780 [AW6A-EL]..... 05–02B–40
DTC P0817 [AW6A-EL]..... 05–02B–41
DTC P0819 [AW6A-EL] 05–02B–44
DTC P0882 [AW6A-EL] 05–02B–47
DTC P0883 [AW6A-EL] 05–02B–50
DTC P0942 [AW6A-EL] 05–02B–51
DTC P0961 [AW6A-EL] 05–02B–52
DTC P0962 [AW6A-EL] 05–02B–53
DTC P0963 [AW6A-EL] 05–02B–55
DTC P0973 [AW6A-EL] 05–02B–57
DTC P0974 [AW6A-EL] 05–02B–59
DTC P0976 [AW6A-EL] 05–02B–61
DTC P0977 [AW6A-EL] 05–02B–63
DTC P0978 [AW6A-EL] 05–02B–65
DTC P0979 [AW6A-EL] 05–02B–66
DTC P0980 [AW6A-EL] 05–02B–68
DTC P0981 [AW6A-EL] 05–02B–70
DTC P0982 [AW6A-EL] 05–02B–71
DTC P0983 [AW6A-EL] 05–02B–73
DTC P0984 [AW6A-EL] 05–02B–75
DTC P0985 [AW6A-EL] 05–02B–76
DTC P0986 [AW6A-EL] 05–02B–78
DTC P0997 [AW6A-EL] 05–02B–80
DTC P0998 [AW6A-EL] 05–02B–81
DTC P0999 [AW6A-EL] 05–02B–83
DTC P1700 [AW6A-EL] 05–02B–85
DTC P2757 [AW6A-EL] 05–02B–87
DTC P2758 [AW6A-EL] 05–02B–89
DTC P2762 [AW6A-EL] 05–02B–91
DTC P2763 [AW6A-EL] 05–02B–92
DTC P2764 [AW6A-EL] 05–02B–94
PID/DATA MONITOR INSPECTION [A6WA-EL].....05–02B–96

AUTOMATIC TRANSAXLE CONTROL SYSTEM WIRING DIAGRAM [AW6A-EL]

E6U050200000W01

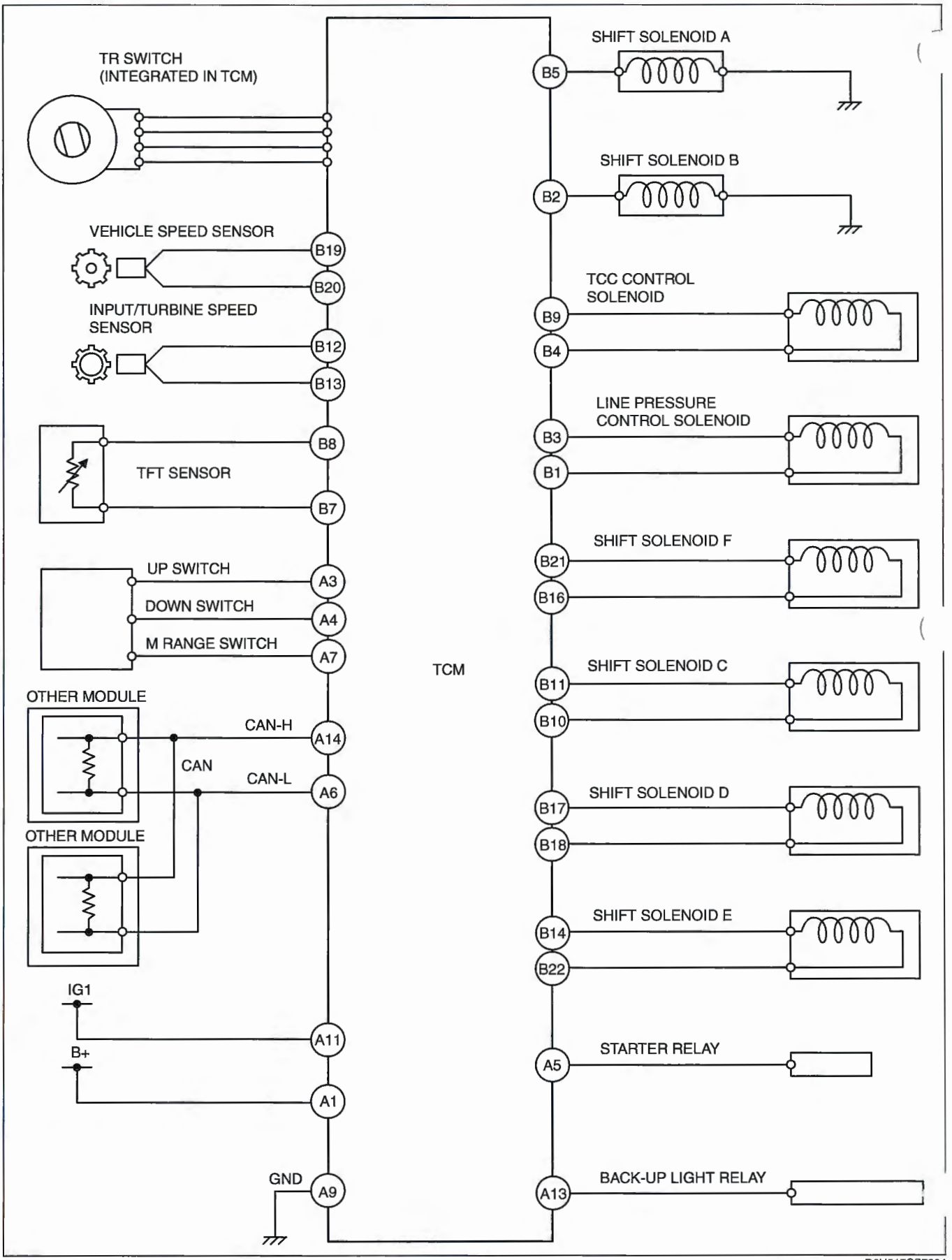

D6U517CS7004

FOREWORD [AW6A-EL]

E6U050200000W02

- When the customer reports vehicle malfunction, check the malfunction indicator lamp (MIL) indication, AT warning indication, and diagnostic trouble code (DTC), then diagnose the malfunction according to following flowchart.
  - — If a DTC exists, diagnose the applicable DTC inspection. (See 05–02B–5 DTC TABLE [AW6A-EL].)
  - — If a DTC does not exist and the MIL and AT warning lights do not illuminate, diagnose the applicable symptom troubleshooting. (See 05–03B–4 SYMPTOM TROUBLESHOOTING ITEM TABLE [AW6A-EL].)

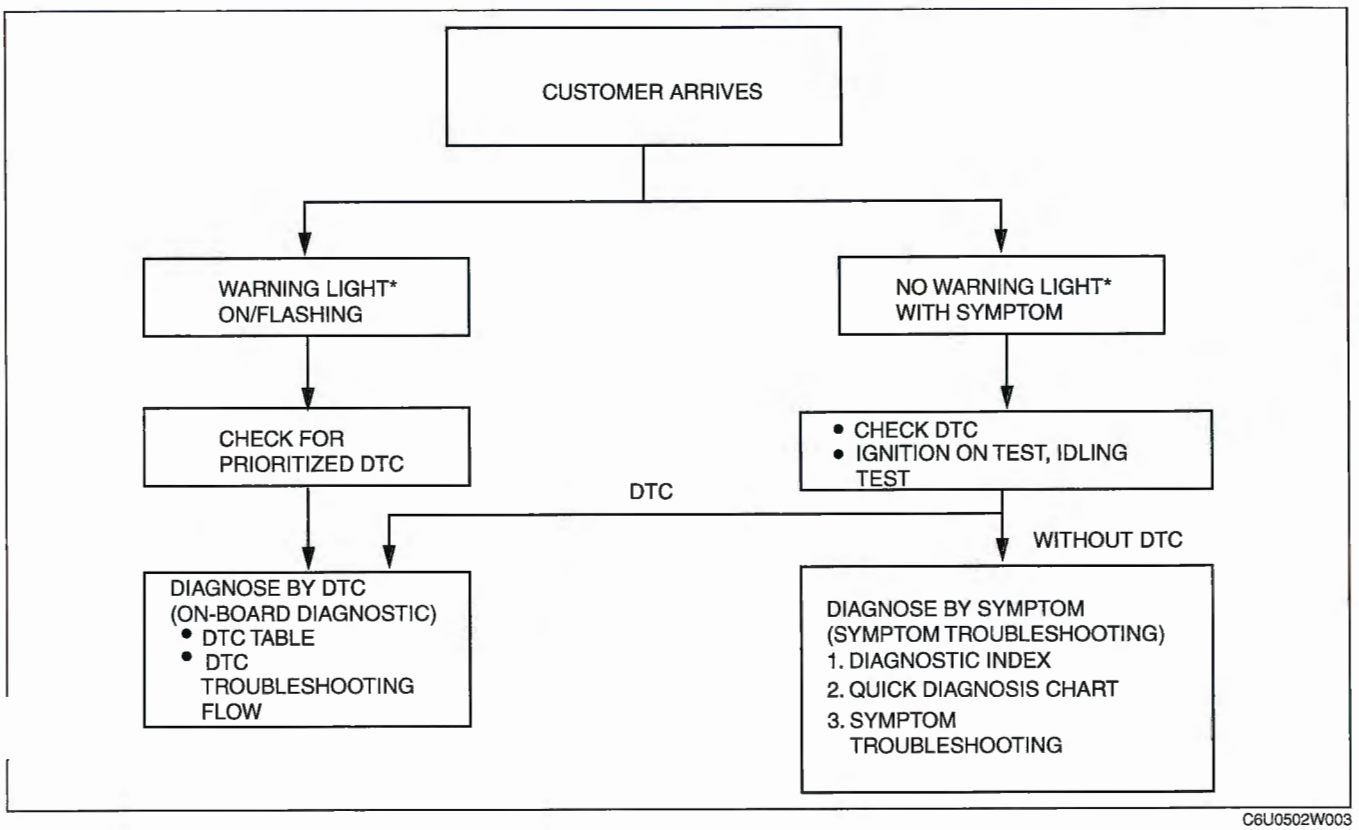

C6U0502W003

*: Malfunction Indicator Lamp (MIL), AT warning light

AUTOMATIC TRANSAXLE ON-BOARD DIAGNOSTIC FUNCTION [AW6A-EL]

E6U050200000W03

DTC Reading Procedure

1. Perform necessary vehicle preparation and visual inspection.
2. Connect the WDS or equivalent to the vehicle DLC-2 16-pin connector located on the left side of the center console.
3. Retrieve DTCs using the WDS or equivalent.

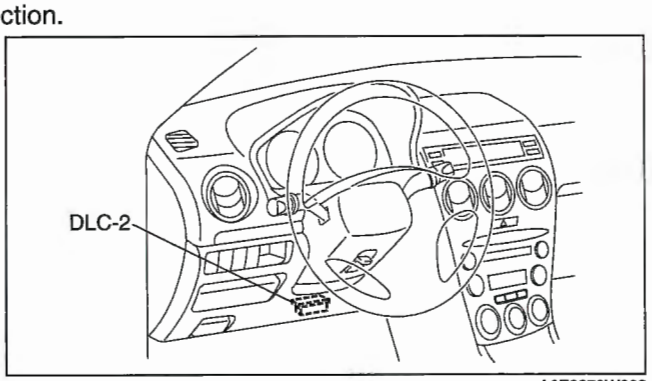

A6E3970W002

AFTER REPAIR PROCEDURE [AW6A-EL]

E6U050200000W04

Caution
- **After repairing a malfunction, perform this procedure to verify that the malfunction has been corrected.**
- **When this procedure is carried out, be sure to drive the vehicle at lawful speed and pay attention to the other vehicles.**

1. Connect the WDS or equivalent to the DLC-2.
2. Turn the ignition switch to the ON position (engine off).
3. Select the clear code function and clear the DTC.
4. Perform the following trouble code inspections to ensure that the DTC has been resolved:
   - For P0601, P0603, P0604, P0780, P0817, P0882, P0883, P0942, P0961, P0962, P0963, P0973, P0974, P0976, P0977, P0978, P0979, P0980, P0981, P0982, P0983, P0984, P0985, P0986, P0997, P0998, P0999, P1700, P2762, P2763, P2764
     i. Start the engine.
     ii. Warm up the engine and ATX.
     iii. Drive the vehicle in D range and make sure that the gears shift smoothly from 1GR to 6GR.
     iv. Go to Step 5.
   - For P0706, P0707, P0708
     i. Start the engine.
     ii. Warm up the engine to normal operating temperature.
     iii. Depress the brake pedal, and shift the selector lever from P to D for **5 s or more**.
     iv. Gradually slow down and stop the vehicle.
     v. Turn the ignition switch to the LOCK position.
     vi. Go to Step 5.
   - For P0711
     i. Start the engine.
     ii. Warm up the engine to normal operating temperature.
     iii. Drive the vehicle in D range for **15 min or more**.
     iv. Gradually slow down and stop the vehicle.
     v. Turn the ignition switch to the LOCK position.
     vi. Go to Step 5
   - For P0712, P0713
     i. Start the engine.
     ii. Warm up the engine to normal operating temperature.
     iii. Drive the vehicle in D range for **150 s or more**.
     iv. Gradually slow down and stop the vehicle.
     v. Turn the ignition switch to the LOCK position.
     vi. Go to Step 5.
   - For P0717, P0722
     i. Start the engine.
     ii. Warm up the engine to normal operating temperature.
     iii. Drive the vehicle, two separate times, in D range at **20 km/h {12 mph} or more** for **150 s or more**.
     iv. Gradually slow down and stop the vehicle.
     v. Turn the ignition switch to the LOCK position.
     vi. Go to Step 5.
   - For P0731, P0732
     i. Start the engine.
     ii. Warm up the engine to normal operating temperature.
     iii. Drive the vehicle in D range, at **10 km/h {6 mph} or more** for **2 s or more**.
     iv. Go to Step 5.
   - For P0733
     i. Start the engine.
     ii. Warm up the engine to normal operating temperature.
     iii. Drive the vehicle in D range, at **20 km/h {12 mph} or more** for **2 s or more**.
     iv. Go to Step 5.

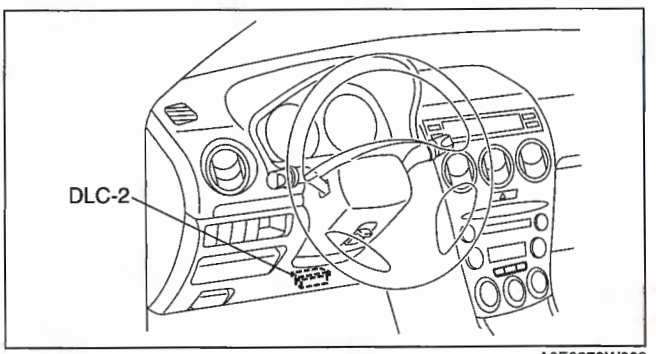

A6E3970W002

- For P0729, P0734, P0735
  i. Start the engine.
  ii. Warm up the engine to normal operating temperature.
  iii. Drive the vehicle in D range, at **40 km/h {25 mph} or more** for **2 s or more**.
  iv. Go to Step 5.
- For P0736
  i. Start the engine.
  ii. Warm up the engine to normal operating temperature.
  iii. Drive the vehicle in R range.
  iv. Go to Step 5.
- For P0819
  i. Start the engine.
  ii. Warm up the engine to normal operating temperature.
  iii. Drive the vehicle in M range, and shift the selector lever (operate up and down switches) between 1GR to 6GR for **10 s or more**.
  iv. Go to Step 5.
- For P2757
  i. Start the engine.
  ii. Warm up the engine and ATX.
  iii. Drive the vehicle in D range and make sure that the gears shift smoothly from 1GR to 6GR and TCC is operated.
  iv. Go to Step 5.
- For P2758
  i. Start the engine.
  ii. Warm up the engine to normal operating temperature.
  iii. Drive the vehicle in D range and make sure that the gears shift smoothly from 1GR to 6GR and TCC is no operated.
  iv. Go to Step 5.

5. Gradually slow down and stop the vehicle.
6. Make sure that no DTCs occur.

DTC TABLE [AW6A-EL]

E6U050200000W05

X: Available

DTC No.	Condition	MIL	AT warning light	DC	Monitor item	Memory function	Page
P0601	Flash ROM malfunction	X	X	1	CCM	X	(See 05–02B–8 DTC P0601 [AW6A-EL])
P0603	EEPROM malfunction	X	X	1	–	X	(See 05–02B–9 DTC P0603 [AW6A-EL])
P0604	RAM malfunction	X	X	1	CCM	X	(See 05–02B–10 DTC P0604 [AW6A-EL])
P0706	Transaxle range (TR) switch circuit range/ performance	X	X	1	Other	X	(See 05–02B–11 DTC P0706 [AW6A-EL])
P0707	Transaxle range (TR) switch circuit low input	X	X	1	CCM	X	(See 05–02B–12 DTC P0707 [AW6A-EL])
P0708	Transaxle range (TR) switch circuit high input	X	X	1	CCM	X	(See 05–02B–13 DTC P0708 [AW6A-EL])
P0711	Transaxle fluid temperature (TFT) sensor malfunction (stuck)	X	X	1	CCM	X	(See 05–02B–14 DTC P0711 [AW6A-EL])
P0712	Transaxle fluid temperature (TFT) sensor circuit malfunction (short to ground)	X	X	1	CCM	X	(See 05–02B–16 DTC P0712 [AW6A-EL])
P0713	Transaxle fluid temperature (TFT) sensor circuit malfunction (short to power/open circuit)	X	X	1	CCM	X	(See 05–02B–18 DTC P0713 [AW6A-EL])

DTC No.	Condition	MIL	AT warning light	DC	Monitor item	Memory function	Page
P0717	Input/turbine speed sensor circuit malfunction (open circuit/short circuit)	X	X	1	CCM	X	(See 05–02B-20 DTC P0717 [AW6A-EL])
P0722	Vehicle speed sensor (VSS) circuit malfunction (open circuit/short circuit)	X	X	1	CCM	X	(See 05–02B–22 DTC P0722 [AW6A-EL])
P0729	Gear 6 incorrect (incorrect gear ratio detected)	X	X	1	CCM	X	(See 05–02B–24 DTC P0729 [AW6A-EL])
P0730	Gear 1 and engine brake operation incorrect (incorrect gear ratio detected)	–	X	1	CCM	X	(See 05–02B–26 DTC P0730 [AW6A-EL])
P0731	Gear 1 incorrect (incorrect gear ratio detected)	X	X	1	CCM	X	(See 05–02B–28 DTC P0731 [AW6A-EL])
P0732	Gear 2 incorrect (incorrect gear ratio detected)	X	X	1	CCM	X	(See 05–02B–30 DTC P0732 [AW6A-EL])
P0733	Gear 3 incorrect (incorrect gear ratio detected)	X	X	1	CCM	X	(See 05–02B–32 DTC P0733 [AW6A-EL])
P0734	Gear 4 incorrect (incorrect gear ratio detected)	X	X	1	CCM	X	(See 05–02B–34 DTC P0734 [AW6A-EL])
P0735	Gear 5 incorrect (incorrect gear ratio detected)	X	X	1	CCM	X	(See 05–02B–36 DTC P0735 [AW6A-EL])
P0736	Gear reverse incorrect (incorrect gear ratio detected)	–	X	1	–	X	(See 05–02B–38 DTC P0736 [AW6A-EL])
P0780	Valve control solenoid circuit malfunction (valve stuck)	–	X	1	CCM	X	(See 05–02B–41 DTC P0817 [AW6A-EL])
P0817	Stater relay No.2 circuit malfunction (open circuit/short circuit)	–	X	1	–	X	(See 05–02B–41 DTC P0817 [AW6A-EL])
P0819	Manual switch/up switch/down switch circuit malfunction (open circuit/short circuit)	–	X	1	–	X	(See 05–02B–44 DTC P0819 [AW6A-EL])
P0882	TCM B+ low	–	–	1	CCM	X	(See 05–02B–47 DTC P0882 [AW6A-EL])
P0883	TCM B+ high	–	–	1	CCM	X	(See 05–02B–50 DTC P0883 [AW6A-EL])
P0942	Valve control solenoid circuit malfunction at D range (valve stuck)	X	X	1	CCM	X	(See 05–02B–51 DTC P0942 [AW6A-EL])
P0961	Line pressure control solenoid range/ performance (stuck)	X	X	1	CCM	X	(See 05–02B–52 DTC P0961 [AW6A-EL])
P0962	Line pressure control solenoid circuit malfunction (short to ground/open circuit)	X	X	1	CCM	X	(See 05–02B–53 DTC P0962 [AW6A-EL])
P0963	Line pressure control solenoid circuit malfunction (short to power)	X	X	1	CCM	X	(See 05–02B–55 DTC P0963 [AW6A-EL])
P0973	Shift solenoid A circuit malfunction (short to ground)	X	X	1	CCM	X	(See 05–02B–57 DTC P0973 [AW6A-EL])

DTC No.	Condition	MIL	AT warning light	DC	Monitor item	Memory function	Page
0974	Shift solenoid A circuit malfunction (short to power/open circuit)	X	X	1	CCM	X	(See 05–02B–59 DTC P0974 [AW6A-EL])
P0976	Shift solenoid B circuit malfunction (short to ground)	–	X	1	–	X	(See 05–02B–61 DTC P0976 [AW6A-EL])
P0977	Shift solenoid B circuit malfunction (short to power/open circuit)	–	X	1	–	X	(See 05–02B–63 DTC P0977 [AW6A-EL])
P0978	Shift solenoid C range/performance (stuck)	X	X	1	CCM	X	(See 05–02B–65 DTC P0978 [AW6A-EL])
P0979	Shift solenoid C circuit malfunction (short to ground/open circuit)	X	X	1	CCM	X	(See 05–02B–66 DTC P0979 [AW6A-EL])
P0980	Shift solenoid C circuit malfunction (short to power)	X	X	1	CCM	X	(See 05–02B–68 DTC P0980 [AW6A-EL])
P0981	Shift solenoid D range/performance (stuck)	X	X	1	CCM	X	(See 05–02B–70 DTC P0981 [AW6A-EL])
P0982	Shift solenoid D circuit malfunction (short to ground/open circuit)	X	X	1	CCM	X	(See 05–02B–71 DTC P0982 [AW6A-EL])
P0983	Shift solenoid D circuit malfunction (short to power)	X	X	1	CCM	X	(See 05–02B–73 DTC P0983 [AW6A-EL])
P0984	Shift solenoid E range/performance (stuck)	X	X	1	CCM	X	(See 05–02B–75 DTC P0984 [AW6A-EL])
P0985	Shift solenoid E circuit malfunction (short to ground/open circuit)	X	X	1	CCM	X	(See 05–02B–76 DTC P0985 [AW6A-EL])
P0986	Shift solenoid E circuit malfunction (short to power)	X	X	1	CCM	X	(See 05–02B–78 DTC P0986 [AW6A-EL])
P0997	Shift solenoid F range/performance (stuck)	X	X	1	CCM	X	(See 05–02B–80 DTC P0997 [AW6A-EL])
P0998	Shift solenoid F circuit malfunction (short to ground/open circuit)	X	X	1	CCM	X	(See 05–02B–81 DTC P0998 [AW6A-EL])
P0999	Shift solenoid F circuit malfunction (short to power)	X	X	1	CCM	X	(See 05–02B–83 DTC P0999 [AW6A-EL])
P1700	Valve control solenoid circuit malfunction at R range (valve stuck)	–	X	1	–	X	(See 05–02B–85 DTC P1700 [AW6A-EL])
P2757	Torque converter clutch (TCC) stuck off	X	X	1	CCM	X	(See 05–02B–87 DTC P2757 [AW6A-EL])
P2758	Torque converter clutch (TCC) stuck on	X	X	1	CCM	X	(See 05–02B–89 DTC P2758 [AW6A-EL])
P2762	TCC control solenoid range/performance (stuck)	X	X	1	CCM	X	(See 05–02B–91 DTC P2762 [AW6A-EL])
P2763	TCC control solenoid circuit malfunction (short to power)	X	X	1	CCM	X	(See 05–02B–92 DTC P2763 [AW6A-EL])

DTC No.	Condition	MIL	AT warning light	DC	Monitor item	Memory function	Page
P2764	TCC control solenoid circuit malfunction (short to ground/open circuit)	X	X	1	CCM	X	(See 05–02B-94 DTC P2764 [AW6A-EL])
U0073	CAN BUS OFF	(See 09–02A–4 DTC TABLE [MULTIPLEX COMMUNICATION SYSTEM (L3, AJ)])					
U0100	TCM cannot receive any signals from PCM	(See 09–02A–4 DTC TABLE [MULTIPLEX COMMUNICATION SYSTEM (L3, AJ)])					
U0121	TCM cannot receive any signals from ABS HU/CM	(See 09–02A–4 DTC TABLE [MULTIPLEX COMMUNICATION SYSTEM (L3, AJ)])					
U0140	TCM cannot receive any signals from instrument cluster	(See 09–02A–4 DTC TABLE [MULTIPLEX COMMUNICATION SYSTEM (L3, AJ)])					
U0415	Invalid data received from ABS HU/CM (wheel speed)	(See 09–02A–4 DTC TABLE [MULTIPLEX COMMUNICATION SYSTEM (L3, AJ)])					

MIL: Malfunction Indicator Lamp
DC: Drive Cycle
CCM: Comprehensive Component Monitor
– : N/A

DTC P0601 [AW6A-EL]

E6U050200000W06

DTC P0601	Flash ROM malfunction
DETECTION CONDITION	• Flash ROM (in TCM) internal circuit malfunction is detected. **Diagnostic support note:** • This is a continuous monitor (CCM). • The MIL illuminates if the TCM detects the above malfunction condition during the first drive cycle. • A PENDING CODE is not available. • FREEZE FRAME DATA is available. • The AT warning light illuminates. • The DTC is stored in the TCM memory.
POSSIBLE CAUSE	• TCM malfunction

Diagnostic procedure

STEP	INSPECTION		ACTION
1	**VERIFY FREEZE FRAME DATA HAS BEEN RECORDED** • Has the FREEZE FRAME DATA been recorded?	Yes	Go to the next step.
		No	Record the FREEZE FRAME DATA on the repair order, then go to the next step.
2	**VERIFY RELATED REPAIR INFORMATION AVAILABILITY** • Verify related Service Bulletins and/or on-line repair information availability. • Is any related repair information available?	Yes	Perform repair or diagnosis according to the available repair information. • If the vehicle is not repaired, go to the next step.
		No	Replace the TCM, then go to the next step. (See 05–17B–25 TCM REMOVAL/INSTALLATION [AW6A-EL].)
3	**VERIFY TROUBLESHOOTING OF DTC P0601 COMPLETED** • Make sure to reconnect all the disconnected connectors. • Clear the DTC from the memory using the WDS or equivalent. • Drive the vehicle in D range and make sure that gears shift smoothly from 1GR to 6GR. • Is same DTC present?	Yes	Replace the TCM, then go to the next step. (See 05–17B–25 TCM REMOVAL/INSTALLATION [AW6A-EL].)
		No	Go to the next step.
4	**VERIFY AFTER REPAIR PROCEDURE** • Perform the "After Repair Procedure". (See 05–02B–4 AFTER REPAIR PROCEDURE [AW6A-EL].) • Are any DTCs present?	Yes	Go to the applicable DTC inspection. (See 05–02B–5 DTC TABLE [AW6A-EL].)
		No	Troubleshooting completed.

DTC P0603 [AW6A-EL]

E6U050200000W07

DTC P0603	EEPROM malfunction
DETECTION CONDITION	• Different numeric values for EEPRROM and RAM (in TCM) are detected. **Diagnostic support note:** • The MIL illuminates if the TCM detects the above malfunction condition during the first drive cycle. • A PENDING CODE is not available. • FREEZE FRAME DATA is available. • The AT warning light illuminates. • The DTC is stored in the TCM memory.
POSSIBLE CAUSE	• TCM malfunction

Diagnostic procedure

STEP	INSPECTION		ACTION
1	**VERIFY FREEZE FRAME DATA HAS BEEN RECORDED** • Has the FREEZE FRAME DATA been recorded?	Yes	Go to the next step.
		No	Record the FREEZE FRAME DATA on the repair order, then go to the next step.
2	**VERIFY RELATED REPAIR INFORMATION AVAILABILITY** • Verify related Service Bulletins and/or on-line repair information availability. • Is any related repair information available?	Yes	Perform repair or diagnosis according to the available repair information. • If the vehicle is not repaired, go to the next step.
		No	Replace the TCM, then go to the next step. (See 05–17B–25 TCM REMOVAL/INSTALLATION [AW6A-EL].)
3	**VERIFY TROUBLESHOOTING OF DTC P0603 COMPLETED** • Make sure to reconnect all the disconnected connectors. • Clear the DTC from the memory using the WDS or equivalent. • Drive the vehicle in D range and make sure that gears shift smoothly from 1GR to 6GR. • Is same DTC present?	Yes	Replace the TCM, then go to the next step. (See 05–17B–25 TCM REMOVAL/INSTALLATION [AW6A-EL].)
		No	Go to the next step.
4	**VERIFY AFTER REPAIR PROCEDURE** • Perform the "After Repair Procedure". (See 05–02B–4 AFTER REPAIR PROCEDURE [AW6A-EL].) • Are any DTCs present?	Yes	Go to the applicable DTC inspection. (See 05–02B–5 DTC TABLE [AW6A-EL].)
		No	Troubleshooting completed.

DTC P0604 [AW6A-EL]

E6U050200000W08

DTC P0604	RAM malfunction
DETECTION CONDITION	• RAM (in TCM) read/write error is detected. **Diagnostic support note:** • This is a continuous monitor (CCM). • The MIL illuminates if the TCM detects the above malfunction condition during the first drive cycle. • A PENDING CODE is not available. • FREEZE FRAME DATA is available. • The AT warning light illuminates. • The DTC is stored in the TCM memory.
POSSIBLE CAUSE	• TCM malfunction

Diagnostic procedure

STEP	INSPECTION		ACTION
1	**VERIFY FREEZE FRAME DATA HAS BEEN RECORDED** • Has the FREEZE FRAME DATA been recorded?	Yes	Go to the next step.
		No	Record the FREEZE FRAME DATA on the repair order, then go to the next step.
2	**VERIFY RELATED REPAIR INFORMATION AVAILABILITY** • Verify related Service Bulletins and/or on-line repair information availability. • Is any related repair information available?	Yes	Perform repair or diagnosis according to the available repair information. • If the vehicle is not repaired, go to the next step.
		No	Replace the TCM, then go to the next step. (See 05–17B–25 TCM REMOVAL/INSTALLATION [AW6A-EL].)
3	**VERIFY TROUBLESHOOTING OF DTC P0604 COMPLETED** • Make sure to reconnect all the disconnected connectors. • Clear the DTC from the memory using the WDS or equivalent. • Drive the vehicle in D range and make sure that gears shift smoothly from 1GR to 6GR. • Is same DTC present?	Yes	Replace the TCM, then go to the next step. (See 05–17B–25 TCM REMOVAL/INSTALLATION [AW6A-EL].)
		No	Go to the next step.
4	**VERIFY AFTER REPAIR PROCEDURE** • Perform the "After Repair Procedure". (See 05–02B–4 AFTER REPAIR PROCEDURE [AW6A-EL].) • Are any DTCs present?	Yes	Go to the applicable DTC inspection. (See 05–02B–5 DTC TABLE [AW6A-EL].)
		No	Troubleshooting completed.

DTC P0706 [AW6A-EL]

E6U050200000W09

DTC P0706	Transaxle range (TR) switch circuit range/performance
DETECTION CONDITION	• TCM detects stuck TR switch when ignition switch is at ON position. **Diagnostic support note:** • This is continuous monitor (CCM). • The MIL illuminates if the TCM detects the above malfunction condition during first drive cycle. • A PENDING CODE is not available. • FREEZE FRAME DATA is available. • The AT warning light illuminates. • The DTC is stored in the TCM memory.
POSSIBLE CAUSE	• TR switch malfunction • TCM malfunction

Diagnostic procedure

STEP	INSPECTION		ACTION
1	**VERIFY FREEZE FRAME DATA HAS BEEN RECORDED** • Has the FREEZE FRAME DATA been recorded?	Yes	Go to the next step.
		No	Record the FREEZE FRAME DATA on the repair order, then go to the next step.
2	**VERIFY RELATED REPAIR INFORMATION AVAILABILITY** • Verify related Service Bulletins and/or on-line repair information availability. • Is any related repair information available?	Yes	Perform repair or diagnosis according to the available repair information. • If the vehicle is not repaired, go to the next step.
		No	Replace the TCM, then go to the next step. (See 05–17B–25 TCM REMOVAL/INSTALLATION [AW6A-EL].)
3	**VERIFY TROUBLESHOOTING OF DTC P0706 COMPLETED** • Make sure to reconnect all the disconnected connectors. • Clear the DTC from the memory using the WDS or equivalent. • Drive the vehicle in each range (P—D). • Is same DTC present?	Yes	Replace the TCM, then go to the next step. (See 05–17B–25 TCM REMOVAL/INSTALLATION [AW6A-EL].)
		No	Go to the next step.
4	**VERIFY AFTER REPAIR PROCEDURE** • Perform the "After Repair Procedure". (See 05–02B–4 AFTER REPAIR PROCEDURE [AW6A-EL].) • Are any DTCs present?	Yes	Go to the applicable DTC inspection. (See 05–02B–5 DTC TABLE [AW6A-EL].)
		No	Troubleshooting completed.

DTC P0707 [AW6A-EL]

E6U050200000W10

DTC P0707	Transaxle range (TR) switch circuit low input
DETECTION CONDITION	• TR switch position voltage input to TCM is less than 0.127 V when ignition switch is at ON position. **Diagnostic support note:** • This is a continuous monitor (CCM). • The MIL illuminates if the TCM detects the above malfunction condition during the first drive cycle. • A PENDING CODE is not available. • FREEZE FRAME DATA is available. • The AT warning light illuminates. • The DTC is stored in the TCM memory.
POSSIBLE CAUSE	• TR switch malfunction • TCM malfunction

Diagnostic procedure

STEP	INSPECTION		ACTION
1	**VERIFY FREEZE FRAME DATA HAS BEEN RECORDED** • Has the FREEZE FRAME DATA been recorded?	Yes	Go to the next step.
		No	Record the FREEZE FRAME DATA on the repair order, then go to the next step.
2	**VERIFY RELATED REPAIR INFORMATION AVAILABILITY** • Verify related Service Bulletins and/or on-line repair information availability. • Is any related repair information available?	Yes	Perform repair or diagnosis according to the available repair information. • If the vehicle is not repaired, go to the next step.
		No	Replace the TCM, then go to the next step. (See 05–17B–25 TCM REMOVAL/INSTALLATION [AW6A-EL].)
3	**VERIFY TROUBLESHOOTING OF DTC P0707 COMPLETED** • Make sure to reconnect all the disconnected connectors. • Clear the DTC from the memory using the WDS or equivalent. • Drive the vehicle in each range (P—D). • Is same DTC present?	Yes	Replace the TCM, then go to the next step. (See 05–17B–25 TCM REMOVAL/INSTALLATION [AW6A-EL].)
		No	Go to the next step.
4	**VERIFY AFTER REPAIR PROCEDURE** • Perform the "After Repair Procedure". (See 05–02B–4 AFTER REPAIR PROCEDURE [AW6A-EL].) • Are any DTCs present?	Yes	Go to the applicable DTC inspection. (See 05–02B–5 DTC TABLE [AW6A-EL].)
		No	Troubleshooting completed.

DTC P0708 [AW6A-EL]

E6U050200000W11

DTC P0708	Transaxle range (TR) switch circuit high input
DETECTION CONDITION	• TR switch position voltage input to TCM is 4.84 V or more when ignition switch is at ON position. **Diagnostic support note:** • This is a continuous monitor (CCM). • The MIL illuminates if the TCM detects the above malfunction condition during the first drive cycle. • A PENDING CODE is not available. • FREEZE FRAME DATA is available. • The AT warning light illuminates. • The DTC is stored in the TCM memory.
POSSIBLE CAUSE	• TR switch malfunction • TCM malfunction

Diagnostic procedure

STEP	INSPECTION		ACTION
1	**VERIFY FREEZE FRAME DATA HAS BEEN RECORDED** • Has the FREEZE FRAME DATA been recorded?	Yes	Go to the next step.
		No	Record the FREEZE FRAME DATA on the repair order, then go to the next step.
2	**VERIFY RELATED REPAIR INFORMATION AVAILABILITY** • Verify related Service Bulletins and/or on-line repair information availability. • Is any related repair information available?	Yes	Perform repair or diagnosis according to the available repair information. • If the vehicle is not repaired, go to the next step.
		No	Replace the TCM, then go to the next step. (See 05–17B–25 TCM REMOVAL/INSTALLATION [AW6A-EL].)
3	**VERIFY TROUBLESHOOTING OF DTC P0708 COMPLETED** • Make sure to reconnect all the disconnected connectors. • Clear the DTC from the memory using the WDS or equivalent. • Drive the vehicle in each range (P—D). • Is same DTC present?	Yes	Replace the TCM, then go to the next step. (See 05–17B–25 TCM REMOVAL/INSTALLATION [AW6A-EL].)
		No	Go to the next step.
4	**VERIFY AFTER REPAIR PROCEDURE** • Perform the "After Repair Procedure". (See 05–02B–4 AFTER REPAIR PROCEDURE [AW6A-EL].) • Are any DTCs present?	Yes	Go to the applicable DTC inspection. (See 05–02B–5 DTC TABLE [AW6A-EL].)
		No	Troubleshooting completed.

DTC P0711 [AW6A-EL]

E6U050200000W12

DTC P0711	Transaxle fluid temperature (TFT) sensor malfunction (stuck)
DETECTION CONDITION	• Change in ATF temperature cannot be detected for 15 min or more when driving in D range. **Diagnostic support note:** • This is continuous monitor (CCM). • The MIL illuminates if the TCM detects the above malfunction condition during first drive cycle. • A PENDING CODE is not available. • FREEZE FRAME DATA is available. • The AT warning light illuminates. • The DTC is stored in the TCM memory.
POSSIBLE CAUSE	• TFT sensor malfunction • Damaged connector TCM • TCM malfunction

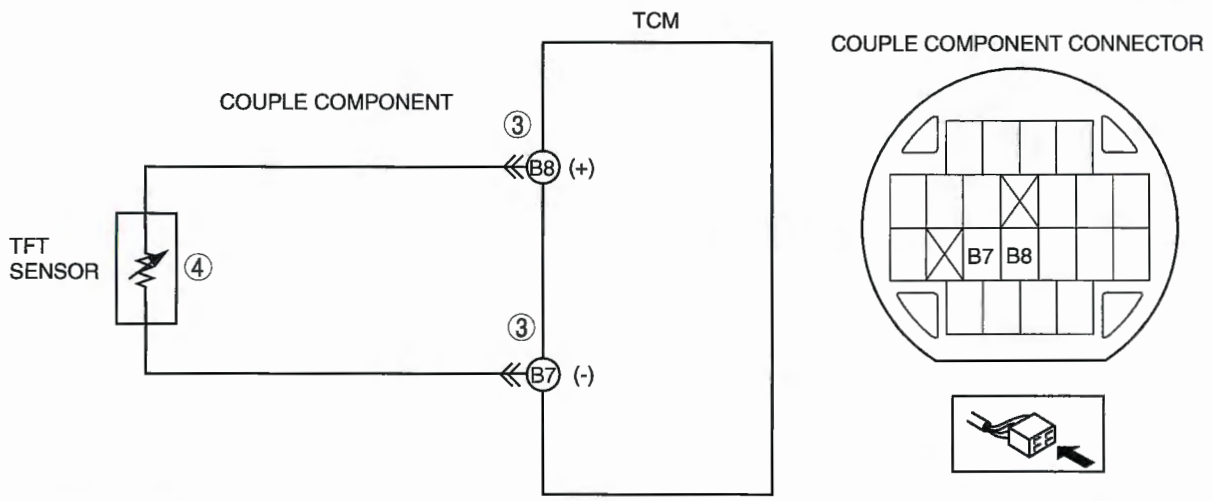

Diagnostic procedure

STEP	INSPECTION		ACTION
1	**VERIFY FREEZE FRAME DATA HAS BEEN RECORDED** • Has the FREEZE FRAME DATA been recorded?	Yes	Go to the next step.
		No	Record the FREEZE FRAME DATA on the repair order, then go to the next step.
2	**VERIFY RELATED REPAIR INFORMATION AVAILABILITY** • Verify related Service Bulletins and/or on-line repair information availability. • Is any related repair information available?	Yes	Perform repair or diagnosis according to the available repair information. • If the vehicle is not repaired, go to the next step.
		No	Go to the next step.
3	**INSPECT TERMINAL COUPLE COMPONENT FOR POOR CONNECTION** • Turn the ignition switch to the LOCK position. • Remove the TCM. (See 05–17B–25 TCM REMOVAL/INSTALLATION [AW6A-EL].) • Inspect for poor connection (such as damaged/pulled-out pins, corrosion). • Are terminals normal?	Yes	Go to the next step.
		No	Replace the couple component, then go to Step 5.
4	**INSPECT RESISTANCE OF TFT SENSOR CIRCUIT** • Inspect for resistance between couple component terminals B8 and B7 (wiring harness-side). • Is resistance as shown below? — ATF temperature **10°C {50°F}: 5.62—7.31 kilohms** — ATF temperature **25°C {77°F}: 3.5 kilohms** — ATF temperature **110°C {230°F}: 0.22—0.27 kilohms** (See 05–17B–13 TRANSAXLE FLUID TEMPERATURE (TFT) SENSOR INSPECTION [AW6A-EL].)	Yes	Go to the next step.
		No	Replace the TFT sensor, then go to the next step. (See 05–17B–15 TRANSAXLE FLUID TEMPERATURE (TFT) SENSOR REMOVAL/INSTALLATION [AW6A-EL].)
5	**VERIFY TROUBLESHOOTING OF DTC P0711 COMPLETED** • Make sure to reconnect all the disconnected connectors. • Clear the DTC from the memory using the WDS or equivalent. • Drive the vehicle in D range and make sure that gears shift smoothly from 1GR to 6GR. • Is same DTC present?	Yes	Replace the TCM, then go to the next step. (See 05–17B–25 TCM REMOVAL/INSTALLATION [AW6A-EL].)
		No	Go to the next step.
6	**VERIFY AFTER REPAIR PROCEDURE** • Perform the "After Repair Procedure". (See 05–02B–4 AFTER REPAIR PROCEDURE [AW6A-EL].) • Are any DTCs present?	Yes	Go to the applicable DTC inspection. (See 05–02B–5 DTC TABLE [AW6A-EL].)
		No	Troubleshooting completed.

DTC P0712 [AW6A-EL]

E6U050200000W13

DTC P0712	Transaxle fluid temperature (TFT) sensor circuit malfunction (short to ground)
DETECTION CONDITION	• If the TCM detects the following condition for **10 s or more**, the TCM determines that the TFT sensor circuit has a malfunction. — ATF temperature **200 °C {392 °F} or more** **Diagnostic support note:** • This is continuous monitor (CCM). • The MIL illuminates if the TCM detects the above malfunction condition during first drive cycle. • A PENDING CODE is not available. • FREEZE FRAME DATA is available. • The AT warning light illuminates. • The DTC is stored in the TCM memory.
POSSIBLE CAUSE	• TFT sensor malfunction • Short to ground in wiring harness between TFT sensor and TCM terminal B8 • Short to ground in wiring harness between TFT sensor and TCM terminal B7 • Damaged connector TCM • TCM malfunction

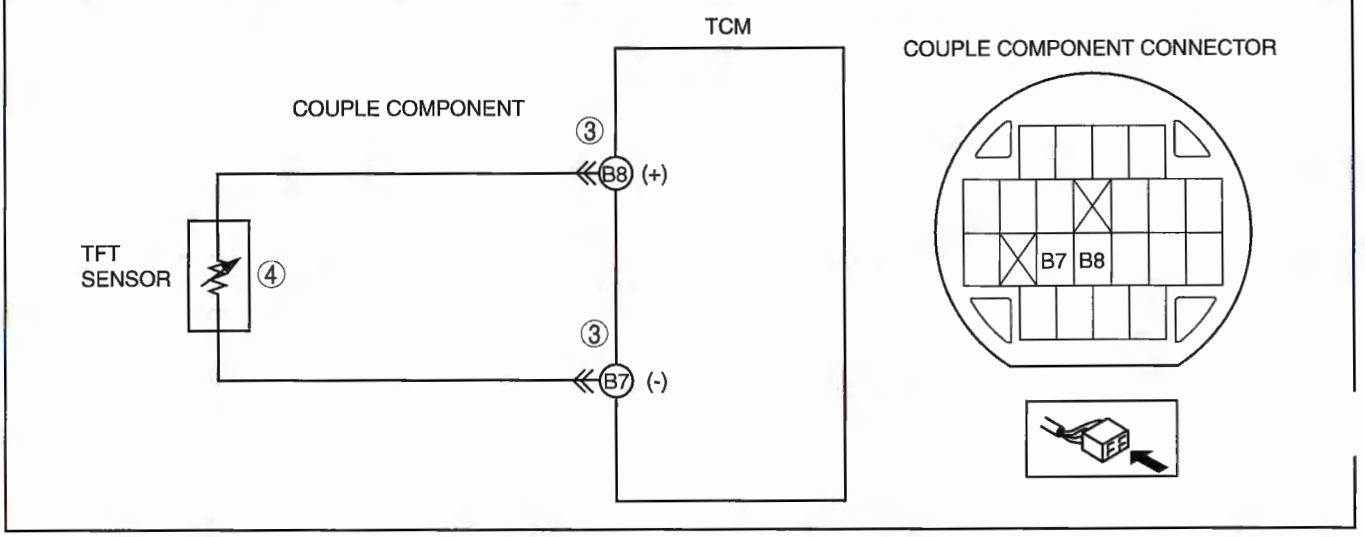

Diagnostic procedure

STEP	INSPECTION		ACTION
1	**VERIFY FREEZE FRAME DATA HAS BEEN RECORDED** • Has the FREEZE FRAME DATA been recorded?	Yes	Go to the next step.
		No	Record the FREEZE FRAME DATA on the repair order, then go to the next step.
2	**VERIFY RELATED REPAIR INFORMATION AVAILABILITY** • Verify related Service Bulletins and/or on-line repair information availability. • Is any related repair information available?	Yes	Perform repair or diagnosis according to the available repair information. • If the vehicle is not repaired, go to the next step.
		No	Go to the next step.
3	**INSPECT TERMINAL COUPLE COMPONENT FOR POOR CONNECTION** • Turn the ignition switch to the LOCK position. • Remove the TCM. (See 05–17B–25 TCM REMOVAL/ INSTALLATION [AW6A-EL].) • Inspect for poor connection (such as damaged/ pulled-out pins, corrosion). • Are terminals normal?	Yes	Go to the next step.
		No	Replace the couple component, then go to Step 5.
4	**INSPECT RESISTANCE OF TFT SENSOR CIRCUIT** • Inspect for resistance between couple component terminals B8 and B7 (wiring harness-side). • Is resistance as shown below? — ATF temperature **10°C {50°F}: 5.62—7.31 kilohms** — ATF temperature **25°C {77°F}: 3.5 kilohms** — ATF temperature **110°C {230°F}: 0.22—0.27 kilohms** (See 05–17B–13 TRANSAXLE FLUID TEMPERATURE (TFT) SENSOR INSPECTION [AW6A-EL].)	Yes	Go to the next step.
		No	Replace the TFT sensor, then go to the next step. (See 05–17B–15 TRANSAXLE FLUID TEMPERATURE (TFT) SENSOR REMOVAL/INSTALLATION [AW6A-EL].)
5	**VERIFY TROUBLESHOOTING OF DTC P0712 COMPLETED** • Make sure to reconnect all the disconnected connectors. • Clear the DTC from the memory using the WDS or equivalent. • Drive the vehicle in D range and make sure that gears shift smoothly from 1GR to 6GR. • Is same DTC present?	Yes	Replace the TCM, then go to the next step. (See 05–17B–25 TCM REMOVAL/INSTALLATION [AW6A-EL].)
		No	Go to the next step.
6	**VERIFY AFTER REPAIR PROCEDURE** • Perform the "After Repair Procedure". (See 05–02B–4 AFTER REPAIR PROCEDURE [AW6A-EL].) • Are any DTCs present?	Yes	Go to the applicable DTC inspection. (See 05–02B–5 DTC TABLE [AW6A-EL].)
		No	Troubleshooting completed.

DTC P0713 [AW6A-EL]

E6U050200000W14

DTC P0713	Transaxle fluid temperature (TFT) sensor circuit malfunction (short to power/open circuit)
DETECTION CONDITION	• If the TCM detects the following condition for **1 s or more**, the TCM determines that the TFT sensor circuit has a malfunction. — Engine warmed-up — ATF temperature **less than –43 °C {–45.4 °F}** **Diagnostic support note:** • This is continuous monitor (CCM). • The MIL illuminates if the TCM detects the above malfunction condition during first drive cycle. • A PENDING CODE is not available. • FREEZE FRAME DATA is available. • The AT warning light illuminates. • The DTC is stored in the TCM memory.
POSSIBLE CAUSE	• TFT sensor malfunction • Open circuit in wiring harness between TFT sensor and TCM terminal B8 • Open circuit in wiring harness between TFT sensor and TCM terminal B7 • Short to power in wiring harness between TFT sensor and TCM terminal B8 • Short to power in wiring harness between TFT sensor and TCM terminal B7 • Damaged connector TCM • TCM malfunction

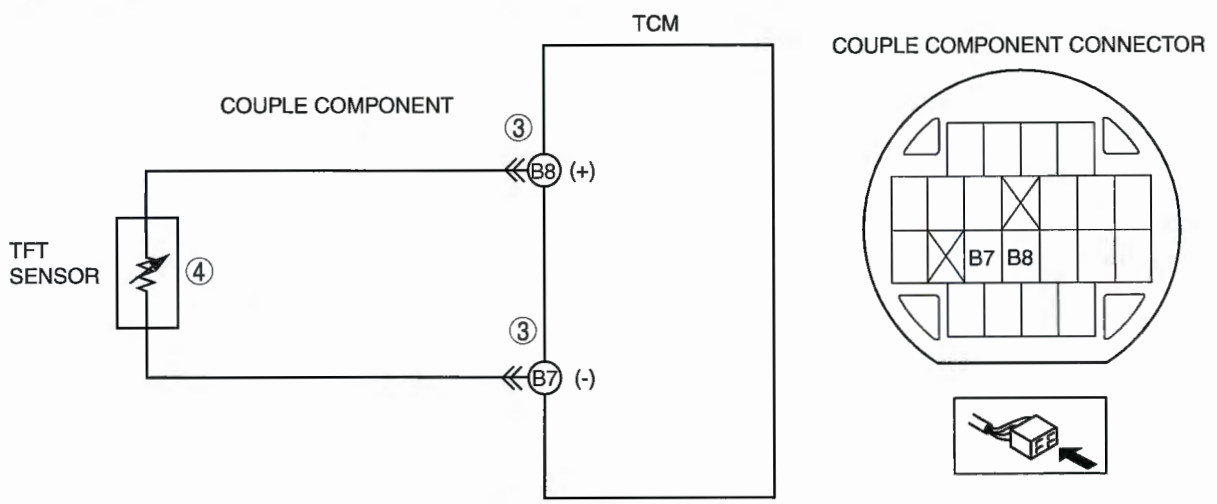

Diagnostic procedure

STEP	INSPECTION		ACTION
1	**VERIFY FREEZE FRAME DATA HAS BEEN RECORDED** • Has the FREEZE FRAME DATA been recorded?	Yes	Go to the next step.
		No	Record the FREEZE FRAME DATA on the repair order, then go to the next step.
2	**VERIFY RELATED REPAIR INFORMATION AVAILABILITY** • Verify related Service Bulletins and/or on-line repair information availability. • Is any related repair information available?	Yes	Perform repair or diagnosis according to the available repair information. • If the vehicle is not repaired, go to the next step.
		No	Go to the next step.
3	**INSPECT TERMINAL COUPLE COMPONENT FOR POOR CONNECTION** • Turn the ignition switch to the LOCK position. • Remove the TCM. (See 05–17B–25 TCM REMOVAL/ INSTALLATION [AW6A-EL].) • Inspect for poor connection (such as damaged/ pulled-out pins, corrosion). • Are terminals normal?	Yes	Go to the next step.
		No	Replace the couple component, then go to Step 5.
4	**INSPECT RESISTANCE OF TFT SENSOR CIRCUIT** • Inspect for resistance between couple component terminals B8 and B7 (wiring harness-side). • Is resistance as shown below? — ATF temperature **10°C {50°F}: 5.62—7.31 kilohms** — ATF temperature **25°C {77°F}: 3.5 kilohms** — ATF temperature **110°C {230°F}: 0.22—0.27 kilohms** (See 05–17B–13 TRANSAXLE FLUID TEMPERATURE (TFT) SENSOR INSPECTION [AW6A-EL].)	Yes	Go to the next step.
		No	Replace the TFT sensor, then go to the next step. (See 05–17B–15 TRANSAXLE FLUID TEMPERATURE (TFT) SENSOR REMOVAL/INSTALLATION [AW6A-EL].)
5	**VERIFY TROUBLESHOOTING OF DTC P0713 COMPLETED** • Make sure to reconnect all the disconnected connectors. • Clear the DTC from the memory using the WDS or equivalent. • Drive the vehicle in D range and make sure that gears shift smoothly from 1GR to 6GR. • Is same DTC present?	Yes	Replace the TCM, then go to the next step. (See 05–17B–25 TCM REMOVAL/INSTALLATION [AW6A-EL].)
		No	Go to the next step.
6	**VERIFY AFTER REPAIR PROCEDURE** • Perform the "After Repair Procedure". (See 05–02B–4 AFTER REPAIR PROCEDURE [AW6A-EL].) • Are any DTCs present?	Yes	Go to the applicable DTC inspection. (See 05–02B–5 DTC TABLE [AW6A-EL].)
		No	Troubleshooting completed.

DTC P0717 [AW6A-EL]

E6U050200000W15

DTC P0717	Input/turbine speed sensor circuit malfunction (open circuit/short circuit)
DETECTION CONDITION	• When all conditions below are satisfied. — D range of TR switch input — Driving vehicle at vehicle speed of **20 km/h {12 mph} or more** — Vehicle speed signal 24 pulse input — Input/turbine speed sensor signal not input • Normal turbine speed signal is not input. **Diagnostic support note:** • This is a continuous monitor (CCM). • The MIL illuminates if the TCM detects the above malfunction condition during the first drive cycle. • A PENDING CODE is not available. • FREEZE FRAME DATA is available. • The AT warning light illuminates. • The DTC is stored in the TCM memory.
POSSIBLE CAUSE	• Input/turbine speed sensor malfunction • Open circuit between input/turbine speed sensor terminal B and TCM terminal B12 • Open circuit between input/turbine speed sensor terminal A and TCM terminal B13 • Short to ground in wiring harness between input/turbine speed sensor terminal B and TCM terminal B12 • Short to ground in wiring harness between input/turbine speed sensor terminal A and TCM terminal B13 • Short to power in wiring harness between input/turbine speed sensor terminal B and TCM terminal B12 • Short to power in wiring harness between input/turbine speed sensor terminal A and TCM terminal B13 • Damaged connector between input/turbine speed sensor and TCM • TCM malfunction

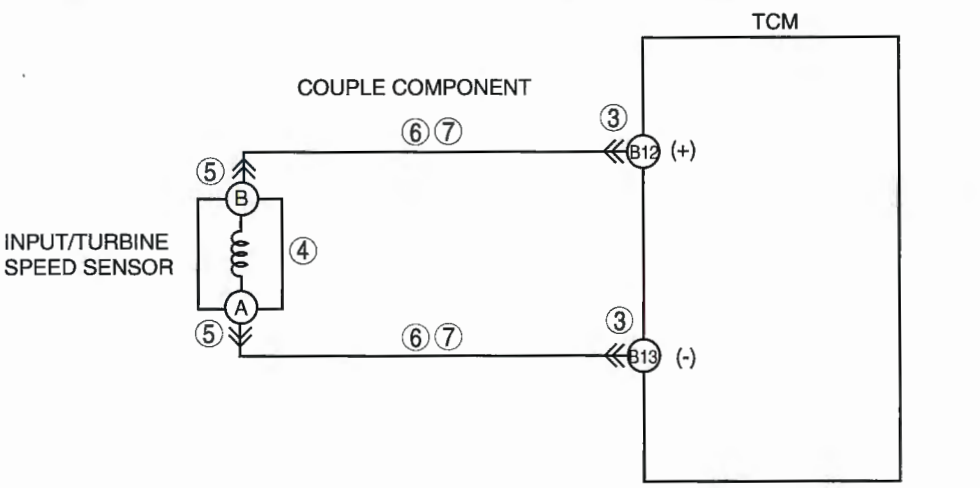

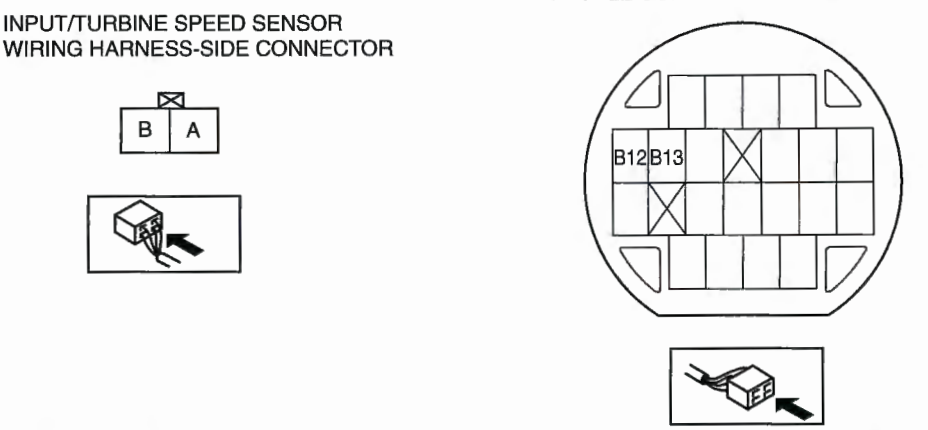

Diagnostic procedure

STEP	INSPECTION		ACTION
1	**VERIFY FREEZE FRAME DATA HAS BEEN RECORDED** • Has the FREEZE FRAME DATA been recorded?	Yes	Go to the next step.
		No	Record the FREEZE FRAME DATA on the repair order, then go to the next step.
2	**VERIFY RELATED REPAIR INFORMATION AVAILABILITY** • Verify related Service Bulletins and/or on-line repair information availability. • Is any related repair information available?	Yes	Perform repair or diagnosis according to the available repair information. • If the vehicle is not repaired, go to the next step.
		No	Go to the next step.
3	**INSPECT TERMINAL COUPLE COMPONENT FOR POOR CONNECTION** • Turn the ignition switch to the LOCK position. • Remove the TCM. (See 05–17B–25 TCM REMOVAL/ INSTALLATION [AW6A-EL].) • Inspect for poor connection (such as damaged/ pulled-out pins, corrosion). • Are terminals normal?	Yes	Go to the next step.
		No	Replace the couple component, then go to Step 8.
4	**INSPECT CONTINUITY OF INPUT/TURBINE SPEED SENSOR CIRCUIT** • Inspect for continuity between the couple component terminals B12 and B13 (wiring harness-side). • Is there continuity?	Yes	Go to go to Step 8.
		No	Go to the next step.
5	**INSPECT TERMINAL INPUT/TURBINE SPEED SENSOR FOR POOR CONNECTION** • Disconnect the input/turbine speed sensor connector. • Inspect for poor connection (such as damaged/ pulled-out pins, corrosion). • Are terminals normal?	Yes	Go to the next step.
		No	Replace the couple component, then go to Step 8.
6	**INSPECT TERMINAL COUPLE COMPONENT CIRCUIT FOR OPEN CIRCUIT** • Inspect for continuity between couple component terminals (wiring harness-side) and input/turbine speed sensor terminals (wiring wiring harness-side). — Terminal B12 and terminal B — Terminal B13 and terminal A • Is there continuity?	Yes	Go to the next step.
		No	Repair or replace the couple component, then go to Step 8.
7	**INSPECT TERMINAL COUPLE COMPONENT CIRCUIT FOR SHORT TO CIRCUIT** • Inspect for continuity between couple component terminals (wiring harness-side). — Terminal B12 and all terminals except B12/ B13 (wiring harness-side). — Terminal B13 and all terminals except B12/ B13 (wiring harness-side). • Is there continuity?	Yes	Repair or replace the couple component, then go to the next step.
		No	Replace the input/turbine speed sensor, then go to the next step. (See 05–17B–18 INPUT/TURBINE SPEED SENSOR REMOVAL/INSTALLATION [AW6A-EL].)
8	**VERIFY TROUBLESHOOTING OF DTC P0717 COMPLETED** • Make sure to reconnect all the disconnected connectors. • Clear the DTC from the memory using the WDS or equivalent. • Drive the vehicle in D range and make sure that gears shift smoothly from 1GR to 6GR. • Is same DTC present?	Yes	Replace the TCM, then go to the next step. (See 05–17B–25 TCM REMOVAL/INSTALLATION [AW6A-EL].)
		No	Go to the next step.
9	**VERIFY AFTER REPAIR PROCEDURE** • Perform the "After Repair Procedure". (See 05–02B–4 AFTER REPAIR PROCEDURE [AW6A-EL].) • Are any DTCs present?	Yes	Go to the applicable DTC inspection. (See 05–02B–5 DTC TABLE [AW6A-EL].)
		No	Troubleshooting completed.

DTC P0722 [AW6A-EL]

E6U050200000W16

DTC P0722	Vehicle speed sensor (VSS) circuit malfunction (open circuit/short circuit)
DETECTION CONDITION	• When all conditions below are satisfied. — D range of TR switch input — Driving vehicle at vehicle speed of **20 km/h {12 mph} or more** — Turbine speed signal 16 pulse input — VSS signal not input • Normal vehicle speed signal is not input for 0.1 s or more. **Diagnostic support note:** • This is a continuous monitor (CCM). • The MIL illuminates if the TCM detects the above malfunction condition during the first drive cycle. • A PENDING CODE is not available. • FREEZE FRAME DATA is available. • The AT warning light illuminates. • The DTC is stored in the TCM memory.
POSSIBLE CAUSE	• VSS malfunction • Open circuit between VSS terminal B and TCM terminal B19 • Open circuit between VSS terminal A and TCM terminal B20 • Short to ground in wiring harness between VSS terminal B and TCM terminal B19 • Short to ground in wiring harness between VSS terminal A and TCM terminal B20 • Short to power in wiring harness between VSS terminal B and TCM terminal B19 • Short to power in wiring harness between VSS terminal A and TCM terminal B20 • Damaged connector between VSS and TCM • TCM malfunction

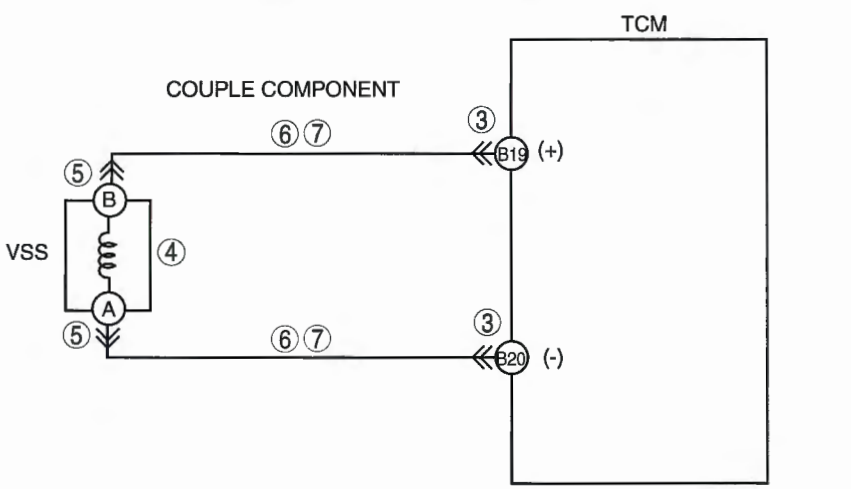

COUPLE COMPONENT CONNECTOR

VSS WIRING HARNESS-SIDE CONNECTOR

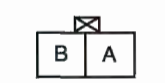

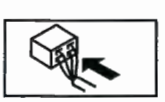

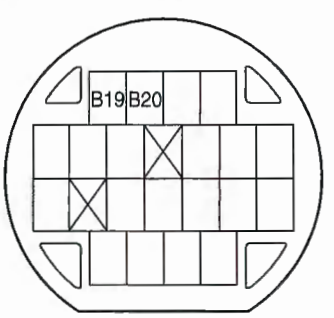

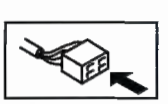

Diagnostic procedure

STEP	INSPECTION		ACTION
1	**VERIFY FREEZE FRAME DATA HAS BEEN RECORDED** • Has the FREEZE FRAME DATA been recorded?	Yes	Go to the next step.
		No	Record the FREEZE FRAME DATA on the repair order, then go to the next step.
2	**VERIFY RELATED REPAIR INFORMATION AVAILABILITY** • Verify related Service Bulletins and/or on-line repair information availability. • Is any related repair information available?	Yes	Perform repair or diagnosis according to the available repair information. • If the vehicle is not repaired, go to the next step.
		No	Go to the next step.
3	**INSPECT TERMINAL COUPLE COMPONENT FOR POOR CONNECTION** • Turn the ignition switch to the LOCK position. • Remove the TCM. (See 05–17B–25 TCM REMOVAL/INSTALLATION [AW6A-EL].) • Inspect for poor connection (such as damaged/pulled-out pins, corrosion). • Are terminals normal?	Yes	Go to the next step.
		No	Replace the couple component, then go to Step 8.
4	**INSPECT CONTINUITY OF VSS CIRCUIT** • Inspect for continuity between the couple component terminals B19 and B20 (wiring harness-side). • Is there continuity?	Yes	Go to go to Step 8.
		No	Go to the next step.
5	**INSPECT TERMINAL VSS FOR POOR CONNECTION** • Disconnect the VSS connector. • Inspect for poor connection (such as damaged/pulled-out pins, corrosion). • Are terminals normal?	Yes	Go to the next step.
		No	Replace the couple component, then go to Step 8.
6	**INSPECT TERMINAL COUPLE COMPONENT CIRCUIT FOR OPEN CIRCUIT** • Inspect for continuity between couple component terminals (wiring harness-side) and VSS terminals (wiring harness-side). — Terminal B19 and terminal B — Terminal B20 and terminal A • Is there continuity?	Yes	Go to the next step.
		No	Repair or replace the couple component, then go to Step 8.
7	**INSPECT TERMINAL COUPLE COMPONENT CIRCUIT FOR SHORT TO CIRCUIT** • Inspect for continuity between couple component terminals (wiring harness-side). — Terminal B19 and all terminals except B19/B20 (wiring harness-side). — Terminal B20 and all terminals except B19/B20 (wiring harness-side). • Is there continuity?	Yes	Repair or replace the couple component, then go to the next step.
		No	Inspect the coupler component. • If the coupler component is normal, replace the automatic transaxle, then go to the next step. (See 05–17B–30 AUTOMATIC TRANSAXLE REMOVAL/INSTALLATION [AW6A-EL].)
8	**VERIFY TROUBLESHOOTING OF DTC P0722 COMPLETED** • Make sure to reconnect all the disconnected connectors. • Clear the DTC from the memory using the WDS or equivalent. • Drive the vehicle in D range and make sure that gears shift smoothly from 1GR to 6GR. • Is same DTC present?	Yes	Replace the TCM, then go to the next step. (See 05–17B–25 TCM REMOVAL/INSTALLATION [AW6A-EL].)
		No	Go to the next step.
9	**VERIFY AFTER REPAIR PROCEDURE** • Perform the "After Repair Procedure". (See 05–02B–4 AFTER REPAIR PROCEDURE [AW6A-EL].) • Are any DTCs present?	Yes	Go to the applicable DTC inspection. (See 05–02B–5 DTC TABLE [AW6A-EL].)
		No	Troubleshooting completed.

DTC P0729 [AW6A-EL]

E6U050200000W17

DTC P0729	Gear 6 incorrect (incorrect gear ratio detected)
DETECTION CONDITION	• Incorrect gear ratio detected when following conditions are satisfied while driving: **Monitoring condition:** — ATF temperature **20 °C {68 °F} or more** — Driving in 6GR in D range — Engine running — Accelerator opening angle **10% or more** — None of the following present: DTC P0706, P0707, P0708, P0711, P0712, P0713, P0717, P0722, P0961, P0962, P0963, P0973, P0974, P0976, P0977, P0978, P0979, P0980, P0981, P0982, P0983, P0984, P0985, P0986, P0997, P0998, P0999 **Diagnostic support note:** • This is a continuous monitor (CCM). • The MIL illuminates if the TCM detects the above malfunction condition during the first drive cycle. • A PENDING CODE is not available. • FREEZE FRAME DATA is available. • The AT warning light illuminates. • The DTC is stored in the TCM memory.
POSSIBLE CAUSE	• ATF level low • Deteriorated ATF • Shift solenoid C stuck • Shift solenoid E stuck • Line pressure control solenoid stuck • Line pressure low • B1 brake slipping • C2 clutch slipping • Control valve stuck • Oil pump malfunction • VSS malfunction • TCM malfunction

Diagnostic procedure

STEP	INSPECTION		ACTION
1	**VERIFY FREEZE FRAME DATA HAS BEEN RECORDED** • Has the FREEZE FRAME DATA been recorded?	Yes	Go to the next step.
		No	Record the FREEZE FRAME DATA on the repair order, then go to the next step.
2	**VERIFY RELATED REPAIR INFORMATION AVAILABILITY** • Verify related Service Bulletins and/or on-line repair information availability. • Is any related repair information available?	Yes	Perform repair or diagnosis according to the available repair information. • If the vehicle is not repaired, go to the next step.
		No	Go to the next step.
3	**INSPECT ATF CONDITION** • Inspect the ATF condition. (See 05–17B–11 AUTOMATIC TRANSAXLE FLUID (ATF) INSPECTION [AW6A-EL].) • Is it normal?	Yes	Go to the next step.
		No	Replace the transaxle, then go to Step 8.
4	**INSPECT ATF LEVEL** • Start the engine. • Warm up the ATX. • Is the ATF level within the specification? (See 05–17B–11 AUTOMATIC TRANSAXLE FLUID (ATF) INSPECTION [AW6A-EL].)	Yes	Go to the next step.
		No	Add ATF to the specified level, then go to Step 8.
5	**INSPECT LINE PRESSURE** • Start the engine. • Measure the line pressures. (See 05–17B–4 Line Pressure Test.) • Are the line pressures within the specifications?	Yes	Go to the next step.
		No	All ranges: Replace the oil pump, then go to Step 8. Any ranges: Replace the control valve body, then go to Step 8. (See 05–17B–39 CONTROL VALVE BODY REMOVAL/INSTALLATION [AW6A-EL].)
6	**INSPECT STALL SPEED** • Measure the stall speed in D range. (See 05–17B–6 Stall Test.) • Is the stall speed within the specification?	Yes	Go to the next step.
		No	Replace the automatic transaxle, then go to Step 8. (See 05–17B–30 AUTOMATIC TRANSAXLE REMOVAL/INSTALLATION [AW6A-EL].)
7	**INSPECT VSS** • Inspect the VSS. (See 05–17B–19 VEHICLE SPEED SENSOR (VSS) INSPECTION [AW6A-EL].) • Is it normal?	Yes	Go to the next step.
		No	Inspect the coupler component. • If the coupler component is normal, replace the automatic transaxle, then go to the next step. (See 05–17B–30 AUTOMATIC TRANSAXLE REMOVAL/INSTALLATION [AW6A-EL].)
8	**VERIFY TROUBLESHOOTING OF DTC P0729 COMPLETED** • Make sure to reconnect all the disconnected connectors. • Clear the DTC from the memory using the WDS or equivalent. • Drive the vehicle under the following conditions at least 12 times for **more than 1 s**: — ATF temperature (TFT PID): **20 °C {68 °F} or more** — Drive in the D range, 6GR — Accelerator opening angle (THOP PID): **10% or more** • Is same DTC present?	Yes	Replace the TCM, then go to the next step. (See 05–17B–25 TCM REMOVAL/INSTALLATION [AW6A-EL].)
		No	Go to the next step.
9	**VERIFY AFTER REPAIR PROCEDURE** • Perform the "After Repair Procedure". (See 05–02B–4 AFTER REPAIR PROCEDURE [AW6A-EL].) • Are any DTCs present?	Yes	Go to the applicable DTC inspection. (See 05–02B–5 DTC TABLE [AW6A-EL].)
		No	Troubleshooting completed.

DTC P0730 [AW6A-EL]

E6U050200000W18

DTC P0730	Gear 1 and engine brake operation incorrect (incorrect gear ratio detected)
DETECTION CONDITION	• Engine braking is detected to be not operating when following conditions are satisfied while driving: **Monitoring condition:** — ATF temperature **20 °C {68 °F} or more** — Driving in 1GR in M range — Engine running — Accelerator opening angle **10% or more** — None of the following present: DTC P0706, P0707, P0708, P0711, P0712, P0713, P0717, P0722, P0961, P0962, P0963, P0973, P0974, P0976, P0977, P0978, P0979, P0980, P0981, P0982, P0983, P0984, P0985, P0986, P0997, P0998, P0999 **Diagnostic support note:** • This is a continuous monitor (CCM). • The MIL does not illuminate if the TCM detects the above malfunction condition during the first drive cycle. • A PENDING CODE is not available. • FREEZE FRAME DATA is available. • The AT warning light illuminates. • The DTC is stored in the TCM memory.
POSSIBLE CAUSE	• ATF level low • Deteriorated ATF • Shift solenoid A stuck • Shift solenoid B stuck • Line pressure control solenoid stuck • Line pressure low • B2 brake slipping • Control valve stuck • Oil pump malfunction • VSS malfunction • TCM malfunction

Diagnostic procedure

STEP	INSPECTION		ACTION
1	**VERIFY FREEZE FRAME DATA HAS BEEN RECORDED** • Has the FREEZE FRAME DATA been recorded?	Yes	Go to the next step.
		No	Record the FREEZE FRAME DATA on the repair order, then go to the next step.
2	**VERIFY RELATED REPAIR INFORMATION AVAILABILITY** • Verify related Service Bulletins and/or on-line repair information availability. • Is any related repair information available?	Yes	Perform repair or diagnosis according to the available repair information. • If the vehicle is not repaired, go to the next step.
		No	Go to the next step.
3	**INSPECT ATF CONDITION** • Inspect the ATF condition. (See 05–17B–11 AUTOMATIC TRANSAXLE FLUID (ATF) INSPECTION [AW6A-EL].) • Is it normal?	Yes	Go to the next step.
		No	Replace the transaxle, then go to Step 8.
4	**INSPECT ATF LEVEL** • Start the engine. • Warm up the ATX. • Is the ATF level within the specification? (See 05–17B–11 AUTOMATIC TRANSAXLE FLUID (ATF) INSPECTION [AW6A-EL].)	Yes	Go to the next step.
		No	Add ATF to the specified level, then go to Step 8.
5	**INSPECT LINE PRESSURE** • Start the engine. • Measure the line pressures. (See 05–17B–4 Line Pressure Test.) • Are the line pressures within the specifications?	Yes	Go to the next step.
		No	All ranges: Replace the oil pump, then go to Step 8. Any ranges: Replace the control valve body, then go to Step 8. (See 05–17B–39 CONTROL VALVE BODY REMOVAL/INSTALLATION [AW6A-EL].)
6	**INSPECT STALL SPEED** • Measure the stall speed in D range. (See 05–17B–6 Stall Test.) • Is the stall speed within the specification?	Yes	Go to the next step.
		No	Replace the automatic transaxle, then go to Step 8. (See 05–17B–30 AUTOMATIC TRANSAXLE REMOVAL/INSTALLATION [AW6A-EL].)
7	**INSPECT VSS** • Inspect the VSS. (See 05–17B–19 VEHICLE SPEED SENSOR (VSS) INSPECTION [AW6A-EL].) • Is it normal?	Yes	Go to the next step.
		No	Inspect the coupler component. • If the coupler component is normal, replace the automatic transaxle, then go to the next step. (See 05–17B–30 AUTOMATIC TRANSAXLE REMOVAL/INSTALLATION [AW6A-EL].)
8	**VERIFY TROUBLESHOOTING OF DTC P0730 COMPLETED** • Make sure to reconnect all the disconnected connectors. • Clear the DTC from the memory using the WDS or equivalent. • Drive the vehicle under the following conditions at least 12 times for **more than 1 s**: — ATF temperature (TFT PID): **20 °C {68 °F} or more** — Drive in the M range, 1GR — Accelerator opening angle (THOP PID): **10% or more** • Is same DTC present?	Yes	Replace the TCM, then go to the next step. (See 05–17B–25 TCM REMOVAL/INSTALLATION [AW6A-EL].)
		No	Go to the next step.
9	**VERIFY AFTER REPAIR PROCEDURE** • Perform the "After Repair Procedure". (See 05–02B–4 AFTER REPAIR PROCEDURE [AW6A-EL].) • Are any DTCs present?	Yes	Go to the applicable DTC inspection. (See 05–02B–5 DTC TABLE [AW6A-EL].)
		No	Troubleshooting completed.

DTC P0731 [AW6A-EL]

E6U050200000W19

DTC P0731	Gear 1 incorrect (incorrect gear ratio detected)
DETECTION CONDITION	• Incorrect gear ratio detected when following conditions are satisfied while driving: **Monitoring condition:** — ATF temperature **20 °C {68 °F} or more** — Driving in 1GR in D range — Engine running — Accelerator opening angle **10% or more** — None of the following present: DTC P0706, P0707, P0708, P0711, P0712, P0713, P0717, P0722, P0961, P0962, P0963, P0973, P0974, P0976, P0977, P0978, P0979, P0980, P0981, P0982, P0983, P0984, P0985, P0986, P0997, P0998, P0999 **Diagnostic support note:** • This is a continuous monitor (CCM). • The MIL illuminates if the TCM detects the above malfunction condition during the first drive cycle. • A PENDING CODE is not available. • FREEZE FRAME DATA is available. • The AT warning light illuminates. • The DTC is stored in the TCM memory.
POSSIBLE CAUSE	• ATF level low • Deteriorated ATF • Shift solenoid D stuck • Shift solenoid E stuck • Shift solenoid F stuck • Line pressure control solenoid stuck • Line pressure low • C1 clutch slipping • One-way clutch slipping • Control valve stuck • Oil pump malfunction • VSS malfunction • TCM malfunction

Diagnostic procedure

STEP	INSPECTION		ACTION
1	**VERIFY FREEZE FRAME DATA HAS BEEN RECORDED** • Has the FREEZE FRAME DATA been recorded?	Yes	Go to the next step.
		No	Record the FREEZE FRAME DATA on the repair order, then go to the next step.
2	**VERIFY RELATED REPAIR INFORMATION AVAILABILITY** • Verify related Service Bulletins and/or on-line repair information availability. • Is any related repair information available?	Yes	Perform repair or diagnosis according to the available repair information. • If the vehicle is not repaired, go to the next step.
		No	Go to the next step.
3	**INSPECT ATF CONDITION** • Inspect the ATF condition. (See 05–17B–11 AUTOMATIC TRANSAXLE FLUID (ATF) INSPECTION [AW6A-EL].) • Is it normal?	Yes	Go to the next step.
		No	Replace the transaxle, then go to Step 8.
4	**INSPECT ATF LEVEL** • Start the engine. • Warm up the ATX. • Is the ATF level within the specification? (See 05–17B–11 AUTOMATIC TRANSAXLE FLUID (ATF) INSPECTION [AW6A-EL].)	Yes	Go to the next step.
		No	Add ATF to the specified level, then go to Step 8.
5	**INSPECT LINE PRESSURE** • Start the engine. • Measure the line pressures. (See 05–17B–4 Line Pressure Test.) • Are the line pressures within the specifications?	Yes	Go to the next step.
		No	All ranges: Replace the oil pump, then go to Step 8. Any ranges: Replace the control valve body, then go to Step 8. (See 05–17B–39 CONTROL VALVE BODY REMOVAL/INSTALLATION [AW6A-EL].)
6	**INSPECT STALL SPEED** • Measure the stall speed in D range. (See 05–17B–6 Stall Test.) • Is the stall speed within the specification?	Yes	Go to the next step.
		No	Replace the automatic transaxle, then go to Step 8. (See 05–17B–30 AUTOMATIC TRANSAXLE REMOVAL/INSTALLATION [AW6A-EL].)
7	**INSPECT VSS** • Inspect the VSS. (See 05–17B–19 VEHICLE SPEED SENSOR (VSS) INSPECTION [AW6A-EL].) • Is it normal?	Yes	Go to the next step.
		No	Inspect the coupler component. • If the coupler component is normal, replace the automatic transaxle, then go to the next step. (See 05–17B–30 AUTOMATIC TRANSAXLE REMOVAL/INSTALLATION [AW6A-EL].)
8	**VERIFY TROUBLESHOOTING OF DTC P0731 COMPLETED** • Make sure to reconnect all the disconnected connectors. • Clear the DTC from the memory using the WDS or equivalent. • Drive the vehicle under the following conditions at least 12 times for **more than 1 s**: — ATF temperature (TFT PID): **20 °C {68 °F} or more** — Drive in the D range, 1GR — Accelerator opening angle (THOP PID): **10% or more** • Is same DTC present?	Yes	Replace the TCM, then go to the next step. (See 05–17B–25 TCM REMOVAL/INSTALLATION [AW6A-EL].)
		No	Go to the next step.
9	**VERIFY AFTER REPAIR PROCEDURE** • Perform the "After Repair Procedure". (See 05–02B–4 AFTER REPAIR PROCEDURE [AW6A-EL].) • Are any DTCs present?	Yes	Go to the applicable DTC inspection. (See 05–02B–5 DTC TABLE [AW6A-EL].)
		No	Troubleshooting completed.

DTC P0732 [AW6A-EL]

E6U050200000W20

DTC P0732	Gear 2 incorrect (incorrect gear ratio detected)
DETECTION CONDITION	• Incorrect gear ratio detected when following conditions are satisfied while driving: **Monitoring condition:** — ATF temperature **20 °C {68 °F} or more** — Driving in 2GR in D range — Engine running — Accelerator opening angle **10% or more** — None of the following present: DTC P0706, P0707, P0708, P0711, P0712, P0713, P0717, P0722, P0961, P0962, P0963, P0973, P0974, P0976, P0977, P0978, P0979, P0980, P0981, P0982, P0983, P0984, P0985, P0986, P0997, P0998, P0999 **Diagnostic support note:** • This is a continuous monitor (CCM). • The MIL illuminates if the TCM detects the above malfunction condition during the first drive cycle. • A PENDING CODE is not available. • FREEZE FRAME DATA is available. • The AT warning light illuminates. • The DTC is stored in the TCM memory.
POSSIBLE CAUSE	• ATF level low • Deteriorated ATF • Shift solenoid D stuck • Shift solenoid E stuck • Line pressure control solenoid stuck • Line pressure low • C1 clutch slipping • B1 brake slipping • Control valve stuck • Oil pump malfunction • VSS malfunction • TCM malfunction

Diagnostic procedure

STEP	INSPECTION		ACTION
1	**VERIFY FREEZE FRAME DATA HAS BEEN RECORDED** • Has the FREEZE FRAME DATA been recorded?	Yes	Go to the next step.
		No	Record the FREEZE FRAME DATA on the repair order, then go to the next step.
2	**VERIFY RELATED REPAIR INFORMATION AVAILABILITY** • Verify related Service Bulletins and/or on-line repair information availability. • Is any related repair information available?	Yes	Perform repair or diagnosis according to the available repair information. • If the vehicle is not repaired, go to the next step.
		No	Go to the next step.
3	**INSPECT ATF CONDITION** • Inspect the ATF condition. (See 05–17B–11 AUTOMATIC TRANSAXLE FLUID (ATF) INSPECTION [AW6A-EL].) • Is it normal?	Yes	Go to the next step.
		No	Replace the transaxle, then go to Step 8.
4	**INSPECT ATF LEVEL** • Start the engine. • Warm up the ATX. • Is the ATF level within the specification? (See 05–17B–11 AUTOMATIC TRANSAXLE FLUID (ATF) INSPECTION [AW6A-EL].)	Yes	Go to the next step.
		No	Add ATF to the specified level, then go to Step 8.
5	**INSPECT LINE PRESSURE** • Start the engine. • Measure the line pressures. (See 05–17B–4 Line Pressure Test.) • Are the line pressures within the specifications?	Yes	Go to the next step.
		No	All ranges: Replace the oil pump, then go to Step 8. Any ranges: Replace the control valve body, then go to Step 8. (See 05–17B–39 CONTROL VALVE BODY REMOVAL/INSTALLATION [AW6A-EL].)
6	**INSPECT STALL SPEED** • Measure the stall speed in D range. (See 05–17B–6 Stall Test.) • Is the stall speed within the specification?	Yes	Go to the next step.
		No	Replace the automatic transaxle, then go to Step 8. (See 05–17B–30 AUTOMATIC TRANSAXLE REMOVAL/INSTALLATION [AW6A-EL].)
7	**INSPECT VSS** • Inspect the VSS. (See 05–17B–19 VEHICLE SPEED SENSOR (VSS) INSPECTION [AW6A-EL].) • Is it normal?	Yes	Go to the next step.
		No	Inspect the coupler component. • If the coupler component is normal, replace the automatic transaxle, then go to the next step. (See 05–17B–30 AUTOMATIC TRANSAXLE REMOVAL/INSTALLATION [AW6A-EL].)
8	**VERIFY TROUBLESHOOTING OF DTC P0732 COMPLETED** • Make sure to reconnect all the disconnected connectors. • Clear the DTC from the memory using the WDS or equivalent. • Drive the vehicle under the following conditions at least 12 times for **more than 1 s**: — ATF temperature (TFT PID): **20 °C {68 °F} or more** — Drive in the D range, 2GR — Accelerator opening angle (THOP PID): **10% or more** • Is same DTC present?	Yes	Replace the TCM, then go to the next step. (See 05–17B–25 TCM REMOVAL/INSTALLATION [AW6A-EL].)
		No	Go to the next step.
9	**VERIFY AFTER REPAIR PROCEDURE** • Perform the "After Repair Procedure". (See 05–02B–4 AFTER REPAIR PROCEDURE [AW6A-EL].) • Are any DTCs present?	Yes	Go to the applicable DTC inspection. (See 05–02B–5 DTC TABLE [AW6A-EL].)
		No	Troubleshooting completed.

DTC P0733 [AW6A-EL]

E6U050200000W21

DTC P0733	Gear 3 incorrect (incorrect gear ratio detected)
DETECTION CONDITION	• Incorrect gear ratio detected when following conditions are satisfied while driving: **Monitoring condition:** — ATF temperature **20 °C {68 °F} or more** — Driving in 3GR in D range — Engine running — Accelerator opening angle **10% or more** — None of the following present: DTC P0706, P0707, P0708, P0711, P0712, P0713, P0717, P0722, P0961, P0962, P0963, P0973, P0974, P0976, P0977, P0978, P0979, P0980, P0981, P0982, P0983, P0984, P0985, P0986, P0997, P0998, P0999 **Diagnostic support note:** • This is a continuous monitor (CCM). • The MIL illuminates if the TCM detects the above malfunction condition during the first drive cycle. • A PENDING CODE is not available. • FREEZE FRAME DATA is available. • The AT warning light illuminates. • The DTC is stored in the TCM memory.
POSSIBLE CAUSE	• ATF level low • Deteriorated ATF • Shift solenoid D stuck • Shift solenoid F stuck • Line pressure control solenoid stuck • Line pressure low • C1 clutch slipping • C3 clutch slipping • Control valve stuck • Oil pump malfunction • VSS malfunction • TCM malfunction

Diagnostic procedure

STEP	INSPECTION		ACTION
1	**VERIFY FREEZE FRAME DATA HAS BEEN RECORDED** • Has the FREEZE FRAME DATA been recorded?	Yes	Go to the next step.
		No	Record the FREEZE FRAME DATA on the repair order, then go to the next step.
2	**VERIFY RELATED REPAIR INFORMATION AVAILABILITY** • Verify related Service Bulletins and/or on-line repair information availability. • Is any related repair information available?	Yes	Perform repair or diagnosis according to the available repair information. • If the vehicle is not repaired, go to the next step.
		No	Go to the next step.
3	**INSPECT ATF CONDITION** • Inspect the ATF condition. (See 05–17B–11 AUTOMATIC TRANSAXLE FLUID (ATF) INSPECTION [AW6A-EL].) • Is it normal?	Yes	Go to the next step.
		No	Replace the transaxle, then go to Step 8.
4	**INSPECT ATF LEVEL** • Start the engine. • Warm up the ATX. • Is the ATF level within the specification? (See 05–17B–11 AUTOMATIC TRANSAXLE FLUID (ATF) INSPECTION [AW6A-EL].)	Yes	Go to the next step.
		No	Add ATF to the specified level, then go to Step 8.
5	**INSPECT LINE PRESSURE** • Start the engine. • Measure the line pressures. (See 05–17B–4 Line Pressure Test.) • Are the line pressures within the specifications?	Yes	Go to the next step.
		No	All ranges: Replace the oil pump, then go to Step 8. Any ranges: Replace the control valve body, then go to Step 8. (See 05–17B–39 CONTROL VALVE BODY REMOVAL/INSTALLATION [AW6A-EL].)
6	**INSPECT STALL SPEED** • Measure the stall speed in D range. (See 05–17B–6 Stall Test.) • Is the stall speed within the specification?	Yes	Go to the next step.
		No	Replace the automatic transaxle, then go to Step 8. (See 05–17B–30 AUTOMATIC TRANSAXLE REMOVAL/INSTALLATION [AW6A-EL].)
7	**INSPECT VSS** • Inspect the VSS. (See 05–17B–19 VEHICLE SPEED SENSOR (VSS) INSPECTION [AW6A-EL].) • Is it normal?	Yes	Go to the next step.
		No	Inspect the coupler component. • If the coupler component is normal, replace the automatic transaxle, then go to the next step. (See 05–17B–30 AUTOMATIC TRANSAXLE REMOVAL/INSTALLATION [AW6A-EL].)
8	**VERIFY TROUBLESHOOTING OF DTC P0733 COMPLETED** • Make sure to reconnect all the disconnected connectors. • Clear the DTC from the memory using the WDS or equivalent. • Drive the vehicle under the following conditions at least 12 times for **more than 1 s**: — ATF temperature (TFT PID): **20 °C {68 °F} or more** — Drive in the D range, 3GR — Accelerator opening angle (THOP PID): **10% or more** • Is same DTC present?	Yes	Replace the TCM, then go to the next step. (See 05–17B–25 TCM REMOVAL/INSTALLATION [AW6A-EL].)
		No	Go to the next step.
9	**VERIFY AFTER REPAIR PROCEDURE** • Perform the "After Repair Procedure". (See 05–02B–4 AFTER REPAIR PROCEDURE [AW6A-EL].) • Are any DTCs present?	Yes	Go to the applicable DTC inspection. (See 05–02B–5 DTC TABLE [AW6A-EL].)
		No	Troubleshooting completed.

DTC P0734 [AW6A-EL]

E6U050200000W22

DTC P0734	Gear 4 incorrect (incorrect gear ratio detected)
DETECTION CONDITION	• Incorrect gear ratio detected when following conditions are satisfied while driving: **Monitoring condition:** — ATF temperature **20 °C {68 °F} or more** — Driving in 4GR in D range — Engine running — Accelerator opening angle **10% or more** — None of the following present: DTC P0706, P0707, P0708, P0711, P0712, P0713, P0717, P0722, P0961, P0962, P0963, P0973, P0974, P0976, P0977, P0978, P0979, P0980, P0981, P0982, P0983, P0984, P0985, P0986, P0997, P0998, P0999 **Diagnostic support note:** • This is a continuous monitor (CCM). • The MIL illuminates if the TCM detects the above malfunction condition during the first drive cycle. • A PENDING CODE is not available. • FREEZE FRAME DATA is available. • The AT warning light illuminates. • The DTC is stored in the TCM memory.
POSSIBLE CAUSE	• ATF level low • Deteriorated ATF • Shift solenoid E stuck • Shift solenoid F stuck • Line pressure control solenoid stuck • Line pressure low • C1 clutch slipping • C2 clutch slipping • Control valve stuck • Oil pump malfunction • VSS malfunction • TCM malfunction

Diagnostic procedure

STEP	INSPECTION		ACTION
1	**VERIFY FREEZE FRAME DATA HAS BEEN RECORDED** • Has the FREEZE FRAME DATA been recorded?	Yes	Go to the next step.
		No	Record the FREEZE FRAME DATA on the repair order, then go to the next step.
2	**VERIFY RELATED REPAIR INFORMATION AVAILABILITY** • Verify related Service Bulletins and/or on-line repair information availability. • Is any related repair information available?	Yes	Perform repair or diagnosis according to the available repair information. • If the vehicle is not repaired, go to the next step.
		No	Go to the next step.
3	**INSPECT ATF CONDITION** • Inspect the ATF condition. (See 05–17B–11 AUTOMATIC TRANSAXLE FLUID (ATF) INSPECTION [AW6A-EL].) • Is it normal?	Yes	Go to the next step.
		No	Replace the transaxle, then go to Step 8.
4	**INSPECT ATF LEVEL** • Start the engine. • Warm up the ATX. • Is the ATF level within the specification? (See 05–17B–11 AUTOMATIC TRANSAXLE FLUID (ATF) INSPECTION [AW6A-EL].)	Yes	Go to the next step.
		No	Add ATF to the specified level, then go to Step 8.
5	**INSPECT LINE PRESSURE** • Start the engine. • Measure the line pressures. (See 05–17B–4 Line Pressure Test.) • Are the line pressures within the specifications?	Yes	Go to the next step.
		No	All ranges: Replace the oil pump, then go to Step 8. Any ranges: Replace the control valve body, then go to Step 8. (See 05–17B–39 CONTROL VALVE BODY REMOVAL/INSTALLATION [AW6A-EL].)
6	**INSPECT STALL SPEED** • Measure the stall speed in D range. (See 05–17B–6 Stall Test.) • Is the stall speed within the specification?	Yes	Go to the next step.
		No	Replace the automatic transaxle, then go to Step 8. (See 05–17B–30 AUTOMATIC TRANSAXLE REMOVAL/INSTALLATION [AW6A-EL].)
7	**INSPECT VSS** • Inspect the VSS. (See 05–17B–19 VEHICLE SPEED SENSOR (VSS) INSPECTION [AW6A-EL].) • Is it normal?	Yes	Go to the next step.
		No	Inspect the coupler component. • If the coupler component is normal, replace the automatic transaxle, then go to the next step. (See 05–17B–30 AUTOMATIC TRANSAXLE REMOVAL/INSTALLATION [AW6A-EL].)
8	**VERIFY TROUBLESHOOTING OF DTC P0734 COMPLETED** • Make sure to reconnect all the disconnected connectors. • Clear the DTC from the memory using the WDS or equivalent. • Drive the vehicle under the following conditions at least 12 times for **more than 1 s**: — ATF temperature (TFT PID): **20 °C {68 °F} or more** — Drive in the D range, 4GR — Accelerator opening angle (THOP PID): **10% or more** • Is same DTC present?	Yes	Replace the TCM, then go to the next step. (See 05–17B–25 TCM REMOVAL/INSTALLATION [AW6A-EL].)
		No	Go to the next step.
9	**VERIFY AFTER REPAIR PROCEDURE** • Perform the "After Repair Procedure". (See 05–02B–4 AFTER REPAIR PROCEDURE [AW6A-EL].) • Are any DTCs present?	Yes	Go to the applicable DTC inspection. (See 05–02B–5 DTC TABLE [AW6A-EL].)
		No	Troubleshooting completed.

DTC P0735 [AW6A-EL]

E6U050200000W23

DTC P0735	Gear 5 incorrect (incorrect gear ratio detected)
DETECTION CONDITION	• Incorrect gear ratio detected when following conditions are satisfied while driving: **Monitoring condition:** — ATF temperature **20 °C {68 °F} or more** — Driving in 5GR in D range — Engine running — Accelerator opening angle **10% or more** — None of the following present: DTC P0706, P0707, P0708, P0711, P0712, P0713, P0717, P0722, P0961, P0962, P0963, P0973, P0974, P0976, P0977, P0978, P0979, P0980, P0981, P0982, P0983, P0984, P0985, P0986, P0997, P0998, P0999 **Diagnostic support note:** • This is a continuous monitor (CCM). • The MIL illuminates if the TCM detects the above malfunction condition during the first drive cycle. • A PENDING CODE is not available. • FREEZE FRAME DATA is available. • The AT warning light illuminates. • The DTC is stored in the TCM memory.
POSSIBLE CAUSE	• ATF level low • Deteriorated ATF • Shift solenoid C stuck • Shift solenoid F stuck • Line pressure control solenoid stuck • Line pressure low • C2 clutch slipping • C3 clutch slipping • Control valve stuck • Oil pump malfunction • VSS malfunction • TCM malfunction

Diagnostic procedure

STEP	INSPECTION		ACTION
1	**VERIFY FREEZE FRAME DATA HAS BEEN RECORDED** • Has the FREEZE FRAME DATA been recorded?	Yes	Go to the next step.
		No	Record the FREEZE FRAME DATA on the repair order, then go to the next step.
2	**VERIFY RELATED REPAIR INFORMATION AVAILABILITY** • Verify related Service Bulletins and/or on-line repair information availability. • Is any related repair information available?	Yes	Perform repair or diagnosis according to the available repair information. • If the vehicle is not repaired, go to the next step.
		No	Go to the next step.
3	**INSPECT ATF CONDITION** • Inspect the ATF condition. (See 05–17B–11 AUTOMATIC TRANSAXLE FLUID (ATF) INSPECTION [AW6A-EL].) • Is it normal?	Yes	Go to the next step.
		No	Replace the transaxle, then go to Step 8.
4	**INSPECT ATF LEVEL** • Start the engine. • Warm up the ATX. • Is the ATF level within the specification? (See 05–17B–11 AUTOMATIC TRANSAXLE FLUID (ATF) INSPECTION [AW6A-EL].)	Yes	Go to the next step.
		No	Add ATF to the specified level, then go to Step 8.
5	**INSPECT LINE PRESSURE** • Start the engine. • Measure the line pressures. (See 05–17B–4 Line Pressure Test.) • Are the line pressures within the specifications?	Yes	Go to the next step.
		No	All ranges: Replace the oil pump, then go to Step 8. Any ranges: Replace the control valve body, then go to Step 8. (See 05–17B–39 CONTROL VALVE BODY REMOVAL/INSTALLATION [AW6A-EL].)
6	**INSPECT STALL SPEED** • Measure the stall speed in D range. (See 05–17B–6 Stall Test.) • Is the stall speed within the specification?	Yes	Go to the next step.
		No	Replace the automatic transaxle, then go to Step 8. (See 05–17B–30 AUTOMATIC TRANSAXLE REMOVAL/INSTALLATION [AW6A-EL].)
7	**INSPECT VSS** • Inspect the VSS. (See 05–17B–19 VEHICLE SPEED SENSOR (VSS) INSPECTION [AW6A-EL].) • Is it normal?	Yes	Go to the next step.
		No	Inspect the coupler component. • If the coupler component is normal, replace the automatic transaxle, then go to the next step. (See 05–17B–30 AUTOMATIC TRANSAXLE REMOVAL/INSTALLATION [AW6A-EL].)
8	**VERIFY TROUBLESHOOTING OF DTC P0735 COMPLETED** • Make sure to reconnect all the disconnected connectors. • Clear the DTC from the memory using the WDS or equivalent. • Drive the vehicle under the following conditions at least 12 times for **more than 1 s**: — ATF temperature (TFT PID): **20 °C {68 °F} or more** — Drive in the D range, 5GR — Accelerator opening angle (THOP PID): **10% or more** • Is same DTC present?	Yes	Replace the TCM, then go to the next step. (See 05–17B–25 TCM REMOVAL/INSTALLATION [AW6A-EL].)
		No	Go to the next step.
9	**VERIFY AFTER REPAIR PROCEDURE** • Perform the "After Repair Procedure". (See 05–02B–4 AFTER REPAIR PROCEDURE [AW6A-EL].) • Are any DTCs present?	Yes	Go to the applicable DTC inspection. (See 05–02B–5 DTC TABLE [AW6A-EL].)
		No	Troubleshooting completed.

DTC P0736 [AW6A-EL]

E6U050200000W24

DTC P0736	Gear reverse incorrect (incorrect gear ratio detected)
DETECTION CONDITION	• Incorrect gear ratio detected when following conditions are satisfied while driving: **Monitoring condition:** — ATF temperature **20 °C {68 °F} or more** — Driving in R position — Engine running — Accelerator opening angle **10% or more** — None of the following present: DTC P0706, P0707, P0708, P0711, P0712, P0713, P0717, P0722, P0961, P0962, P0963, P0973, P0974, P0976, P0977, P0978, P0979, P0980, P0981, P0982, P0983, P0984, P0985, P0986, P0997, P0998, P0999 **Diagnostic support note:** • The MIL does not illuminate if the TCM detects the above malfunction condition during the first drive cycle. • A PENDING CODE is not available. • FREEZE FRAME DATA is available. • The AT warning light illuminates. • The DTC is stored in the TCM memory.
POSSIBLE CAUSE	• ATF level low • Deteriorated ATF • Shift solenoid C stuck • Shift solenoid D stuck • Shift solenoid E stuck • Shift solenoid F stuck • Line pressure control solenoid stuck • Line pressure low • C3 clutch slipping • B2 brake slipping • Control valve stuck • Oil pump malfunction • VSS malfunction • TCM malfunction

Diagnostic procedure

STEP	INSPECTION		ACTION
1	**VERIFY FREEZE FRAME DATA HAS BEEN RECORDED** • Has the FREEZE FRAME DATA been recorded?	Yes	Go to the next step.
		No	Record the FREEZE FRAME DATA on the repair order, then go to the next step.
2	**VERIFY RELATED REPAIR INFORMATION AVAILABILITY** • Verify related Service Bulletins and/or on-line repair information availability. • Is any related repair information available?	Yes	Perform repair or diagnosis according to the available repair information. • If the vehicle is not repaired, go to the next step.
		No	Go to the next step.
3	**INSPECT ATF CONDITION** • Inspect the ATF condition. (See 05–17B–11 AUTOMATIC TRANSAXLE FLUID (ATF) INSPECTION [AW6A-EL].) • Is it normal?	Yes	Go to the next step.
		No	Replace the transaxle, then go to Step 8.
4	**INSPECT ATF LEVEL** • Start the engine. • Warm up the ATX. • Is the ATF level within the specification? (See 05–17B–11 AUTOMATIC TRANSAXLE FLUID (ATF) INSPECTION [AW6A-EL].)	Yes	Go to the next step.
		No	Add ATF to the specified level, then go to Step 8.
5	**INSPECT LINE PRESSURE** • Start the engine. • Measure the line pressures. (See 05–17B–4 Line Pressure Test.) • Are the line pressures within the specifications?	Yes	Go to the next step.
		No	All ranges: Replace the oil pump, then go to Step 8. Any ranges: Replace the control valve body, then go to Step 8. (See 05–17B–39 CONTROL VALVE BODY REMOVAL/INSTALLATION [AW6A-EL].)
6	**INSPECT STALL SPEED** • Measure the stall speed in D range. (See 05–17B–6 Stall Test.) • Is the stall speed within the specification?	Yes	Go to the next step.
		No	Replace the automatic transaxle, then go to Step 8. (See 05–17B–30 AUTOMATIC TRANSAXLE REMOVAL/INSTALLATION [AW6A-EL].)
7	**INSPECT VSS** • Inspect the VSS. (See 05–17B–19 VEHICLE SPEED SENSOR (VSS) INSPECTION [AW6A-EL].) • Is it normal?	Yes	Go to the next step.
		No	Inspect the coupler component. • If the coupler component is normal, replace the automatic transaxle, then go to the next step. (See 05–17B–30 AUTOMATIC TRANSAXLE REMOVAL/INSTALLATION [AW6A-EL].)
8	**VERIFY TROUBLESHOOTING OF DTC P0736 COMPLETED** • Make sure to reconnect all the disconnected connectors. • Clear the DTC from the memory using the WDS or equivalent. • Drive the vehicle under the following conditions at least 12 times for **more than 1 s**: — ATF temperature (TFT PID): **20 °C {68 °F} or more** — Drive in the R position — Accelerator opening angle (THOP PID): **10% or more** • Is same DTC present?	Yes	Replace the TCM, then go to the next step. (See 05–17B–25 TCM REMOVAL/INSTALLATION [AW6A-EL].)
		No	Go to the next step.
9	**VERIFY AFTER REPAIR PROCEDURE** • Perform the "After Repair Procedure". (See 05–02B–4 AFTER REPAIR PROCEDURE [AW6A-EL].) • Are any DTCs present?	Yes	Go to the applicable DTC inspection. (See 05–02B–5 DTC TABLE [AW6A-EL].)
		No	Troubleshooting completed.

DTC P0780 [AW6A-EL]

E6U050200000W25

DTC P0780	Valve control solenoid circuit malfunction (valve stuck)
DETECTION CONDITION	• Irregular shift control detected when following conditions are satisfied while driving: **Monitoring condition:** — ATF temperature **65 °C {149 °F} or more** — Engine running — Driving in D range — Counter drive gear (output) revolution speed **300 rpm or more** (VSS) — None of the following present: DTC P0706, P0707, P0708, P0711, P0712, P0713, P0717, P0722, P0961, P0962, P0963, P0973, P0974, P0976, P0977, P0978, P0979, P0980, P0981, P0982, P0983, P0984, P0985, P0986, P0997, P0998, P0999 **Diagnostic support note:** • This is a continuous monitor (CCM). • The MIL illuminates if the TCM detects the above malfunction condition during the first drive cycle. • A PENDING CODE is not available. • FREEZE FRAME DATA is available. • The AT warning light illuminates. • The DTC is stored in the TCM memory.
POSSIBLE CAUSE	• Shift solenoid C stuck • Shift solenoid D stuck • Shift solenoid E stuck • Shift solenoid F stuck • Line pressure control solenoid stuck • Control valve stuck • TCM malfunction

Diagnostic procedure

STEP	INSPECTION		ACTION
1	**VERIFY FREEZE FRAME DATA HAS BEEN RECORDED** • Has the FREEZE FRAME DATA been recorded?	Yes	Go to the next step.
		No	Record the FREEZE FRAME DATA on the repair order, then go to the next step.
2	**VERIFY RELATED REPAIR INFORMATION AVAILABILITY** • Verify related Service Bulletins and/or on-line repair information availability. • Is any related repair information available?	Yes	Perform repair or diagnosis according to the available repair information. • If the vehicle is not repaired, go to the next step.
		No	Go to the next step.
3	**INSPECT SOLENOID VALVE** • Inspect the solenoid valve. (See 05–17B–20 SOLENOID VALVE INSPECTION [AW6A-EL].) • Is it normal?	Yes	Go to the next step.
		No	Replace the control valve body, then go to the next step. (See 05–17B–39 CONTROL VALVE BODY REMOVAL/INSTALLATION [AW6A-EL].)
4	**VERIFY TROUBLESHOOTING OF DTC P0780 COMPLETED** • Make sure to reconnect all the disconnected connectors. • Clear the DTC from the memory using the WDS or equivalent. • Drive the vehicle in D range and make sure that gears shift smoothly from 1GR to 6GR. • Is same DTC present?	Yes	Replace the TCM, then go to the next step. (See 05–17B–25 TCM REMOVAL/INSTALLATION [AW6A-EL].)
		No	Go to the next step.
5	**VERIFY AFTER REPAIR PROCEDURE** • Perform the "After Repair Procedure". (See 05–02B–4 AFTER REPAIR PROCEDURE [AW6A-EL].) • Are any DTCs present?	Yes	Go to the applicable DTC inspection. (See 05–02B–5 DTC TABLE [AW6A-EL].)
		No	Troubleshooting completed.

DTC P0817 [AW6A-EL]

E6U050200000W26

DTC P0817	Stater relay No.2 circuit malfunction (open circuit/short circuit)
DETECTION CONDITION	• Any of the following conditions are met when ignition switch is at ON position: — 0 V detected at TCM terminal A5 when in D range or R position — 12 V detected at TCM terminal A5 when in P or N position **Diagnostic support note:** • The MIL does not illuminate if the TCM detects the above malfunction condition during the first drive cycle. • A PENDING CODE is not available. • FREEZE FRAME DATA is available. • The AT warning light illuminates. • The DTC is stored in the TCM memory.
POSSIBLE CAUSE	• Open circuit between starter relay No.2 terminal A and TCM terminal A5 • Short to ground in wiring harness between starter relay No.2 terminal A and TCM terminal A5 • Short to power in wiring harness between starter relay No.2 terminal A and TCM terminal A5 • Starter relay No.2 malfunction • Damaged connector between starter relay No.2 and TCM • TCM malfunction

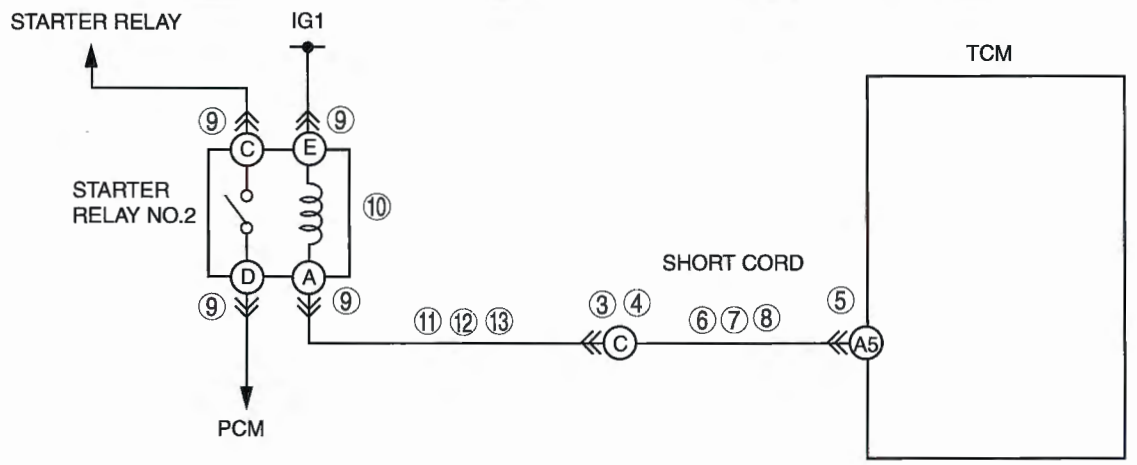

STARTER RELAY NO.2 CONNECTOR WIRING HARNESS-SIDE

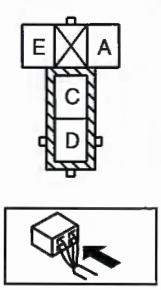

TCM SHORT CORD CONNECTOR (WIRING HARNESS-SIDE)

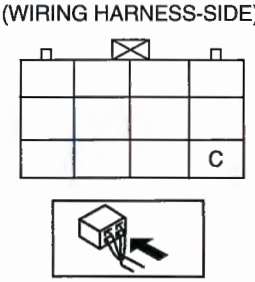

TCM SHORT CORD CONNECTOR (TCM SIDE)

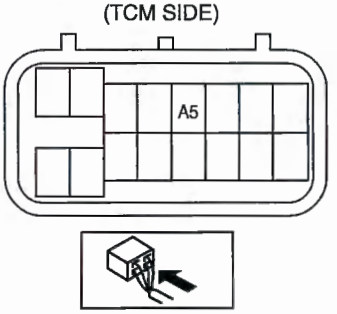

Diagnostic procedure

STEP	INSPECTION		ACTION
1	**VERIFY FREEZE FRAME DATA HAS BEEN RECORDED** • Has the FREEZE FRAME DATA been recorded?	Yes	Go to the next step.
		No	Record the FREEZE FRAME DATA on the repair order, then go to the next step.
2	**VERIFY RELATED REPAIR INFORMATION AVAILABILITY** • Verify related Service Bulletins and/or on-line repair information availability. • Is any related repair information available?	Yes	Perform repair or diagnosis according to the available repair information. • If the vehicle is not repaired, go to the next step.
		No	Go to the next step.
3	**INSPECT VOLTAGE OF STARTER RELAY NO.2 CIRCUIT** • Turn the ignition switch to the ON position (engine off). • Shift the selector lever to P or N position. • Inspect for voltage TCM short cord connector terminal C (wiring harness-side). • Is the voltage **0 V**?	Yes	Go to go to Step 7.
		No	Go to the next step.
4	**INSPECT TERMINAL TCM SHORT CORD CONNECTOR FOR POOR CONNECTION** • Turn the ignition switch to the LOCK position. • Disconnect the TCM short cord connector. • Inspect for poor connection (such as damaged/ pulled-out pins, corrosion). • Are terminals normal?	Yes	Go to the next step.
		No	Replace the couple component, then go to Step 18.
5	**INSPECT TCM CONNECTOR FOR POOR CONNECTION** • Disconnect the TCM connector. • Inspect for poor connection (such as damaged/ pulled-out pins, corrosion). • Are terminals normal?	Yes	Go to the next step.
		No	Replace the couple component, then go to Step 18.
6	**INSPECT TCM SHORT CORD CIRCUIT FOR OPEN CIRCUIT** • Inspect for continuity between TCM short cord connector terminal C and TCM terminal A5 (wiring harness-side). • Is there continuity?	Yes	Go to Step 18.
		No	Repair or replace the wiring harness, then go to Step 18.
7	**INSPECT VOLTAGE OF STARTER RELAY NO.2 CIRCUIT** • Shift the selector lever to D range or R position. • Inspect for voltage TCM short cord connector terminal C (wiring harness-side). • Is the voltage **B+**?	Yes	Go to go to Step 18.
		No	Go to the next step.
8	**INSPECT VOLTAGE OF STARTER RELAY NO.2 TERMINAL E** • Inspect for voltage starter relay No.2 terminal E (wiring harness-side). • Is the voltage **B+**?	Yes	Go to the next step.
		No	Repair or replace the wiring harness, then go to Step 18.
9	**INSPECT STARTER RELAY NO.2 FOR POOR CONNECTION** • Turn the ignition switch to the LOCK position. • Disconnect the starter relay No.2 connector. • Inspect for poor connection (such as damaged/ pulled-out pins, corrosion). • Are terminals normal?	Yes	Go to the next step.
		No	Replace the couple component, then go to Step 18.
10	**INSPECT STARTER RELAY NO.2** • Inspect the starter relay No.2. (See 09–21–7 RELAY INSPECTION) • Is the relay normal?	Yes	Go to the next step.
		No	Replace the starter relay No.2, then go to Step 18.

STEP	INSPECTION		ACTION
11	**INSPECT TERMINAL TCM SHORT CORD CONNECTOR FOR POOR CONNECTION** • Turn the ignition switch to the LOCK position. • Disconnect the TCM short cord connector. • Inspect for poor connection (such as damaged/ pulled-out pins, corrosion). • Are terminals normal?	Yes	Go to the next step.
		No	Replace the couple component, then go to Step 18.
12	**INSPECT STARTER RELAY NO.2 CIRCUIT FOR OPEN CIRCUIT** • Inspect for continuity between TCM short cord connector terminal C and starter relay No.2 terminal A (wiring harness-side). • Is there continuity?	Yes	Go to the next step.
		No	Repair or replace the harness, then go to Step 18.
13	**INSPECT STARTER RELAY NO.2 CIRCUIT FOR SHORT TO GROUND** • Inspect for continuity between starter relay No.2 terminal A (wiring harness-side) and body ground. • Is there continuity?	Yes	Repair or replace the harness, then go to Step 18.
		No	Go to the next step.
14	**INSPECT STARTER RELAY NO.2 CIRCUIT FOR SHORT TO POWER** • Turn the ignition switch to the ON position (engine off). • Inspect the voltage at starter relay No.2 terminal A (wiring harness-side). • Is the voltage **0 V**?	Yes	Go to the next step.
		No	Repair or replace the wiring harness, then go to Step 18.
15	**INSPECT TCM CONNECTOR FOR POOR CONNECTION** • Disconnect the TCM connector. • Inspect for poor connection (such as damaged/ pulled-out pins, corrosion). • Are terminals normal?	Yes	Go to the next step.
		No	Replace the couple component, then go to Step 18.
16	**INSPECT TCM SHORT CORD CIRCUIT FOR SHORT TO GROUND** • Inspect for continuity between TCM short cord connector terminal C (wiring harness-side) and body ground. • Is there continuity?	Yes	Repair or replace the harness, then go to Step 18.
		No	Go to the next step.
17	**INSPECT TCM SHORT CORD CIRCUIT FOR SHORT TO POWER** • Turn the ignition switch to the ON position (engine off). • Inspect the voltage at TCM short cord connector terminal C (wiring harness-side). • Is the voltage **0 V**?	Yes	Go to the next step.
		No	Repair or replace the wiring harness, then go to the next step.
18	**VERIFY TROUBLESHOOTING OF DTC P0817 COMPLETED** • Make sure to reconnect all the disconnected connectors. • Clear the DTC from the memory using the WDS or equivalent. • Drive the vehicle in D range. • Is same DTC present?	Yes	Replace the TCM, then go to the next step. (See 05–17B–25 TCM REMOVAL/INSTALLATION [AW6A-EL].)
		No	Go to the next step.
19	**VERIFY AFTER REPAIR PROCEDURE** • Perform the "After Repair Procedure". (See 05–02B–4 AFTER REPAIR PROCEDURE [AW6A-EL].) • Are any DTCs present?	Yes	Go to the applicable DTC inspection. (See 05–02B–5 DTC TABLE [AW6A-EL].)
		No	Troubleshooting completed.

DTC P0819 [AW6A-EL]

E6U050200000W27

DTC P0819	Manual switch/up switch/down switch circuit malfunction (open circuit/short circuit)
DETECTION CONDITION	• Any of the following conditions are detected for **10 s or more** when engine is running: — **5 V** detected at TCM terminals A7 when in any position except D or M range. — **0 V** detected at TCM terminal A7 when **5 V** are input to TCM terminal A3 or A4. **Diagnostic support note:** • The MIL does not illuminate if the TCM detects the above malfunction condition during the first drive cycle. • A PENDING CODE is not available. • FREEZE FRAME DATA is available. • The AT warning light illuminates. • The DTC is stored in the TCM memory.
POSSIBLE CAUSE	• M range switch malfunction • Up switch malfunction • Down switch malfunction. • Open circuit in wiring harness between selector lever component terminal A and TCM terminal A3 • Open circuit in wiring harness between selector lever component terminal B and TCM terminal A4 • Open circuit in wiring harness between selector lever component terminal C and TCM terminal A7 • Open circuit in wiring harness between selector lever component terminal D and ground • Short to ground in wiring harness between selector lever component terminal A and TCM terminal A3 • Short to ground in wiring harness between selector lever component terminal B and TCM terminal A4 • Short to ground in wiring harness between selector lever component terminal C and TCM terminal A7 • Damaged connector between selector lever component and TCM • TCM malfunction

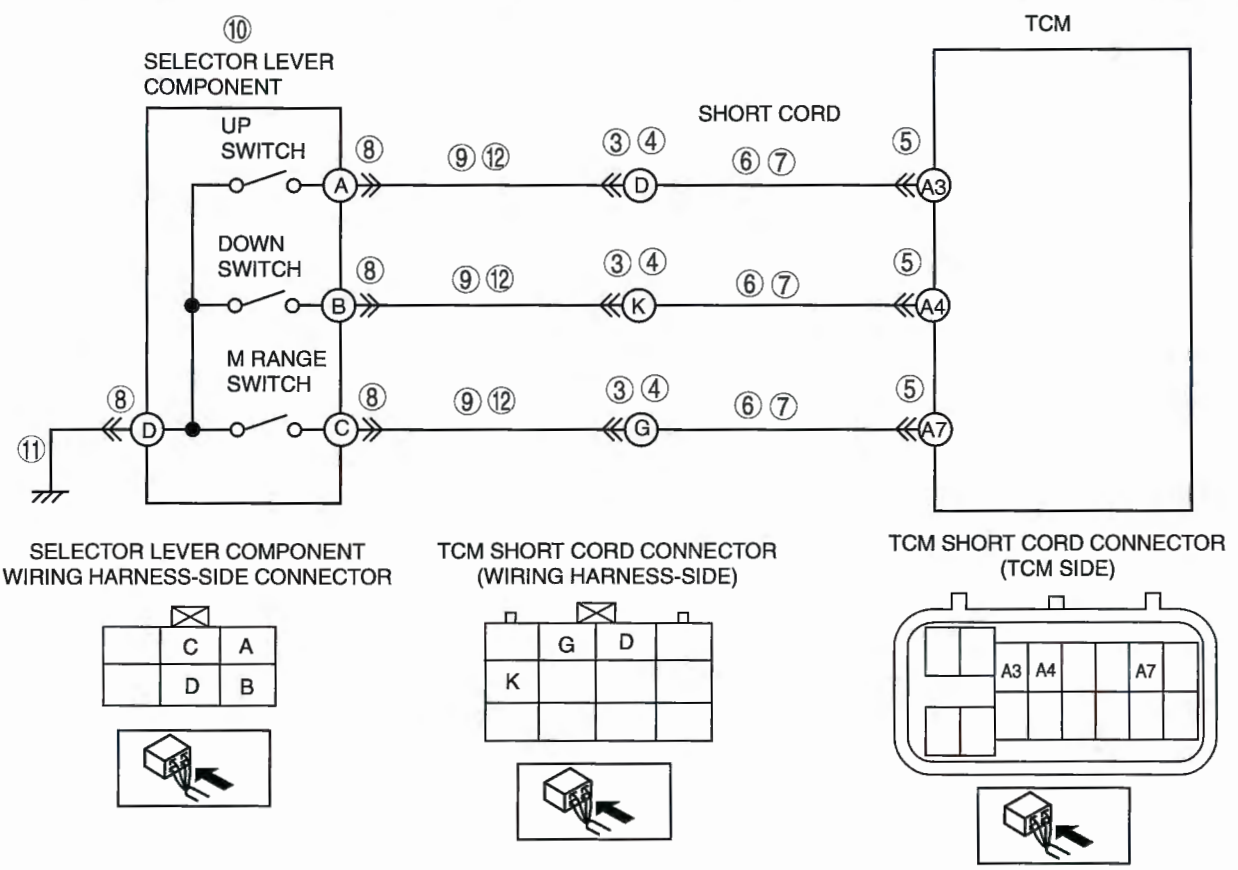

Diagnostic procedure

STEP	INSPECTION		ACTION
1	**VERIFY FREEZE FRAME DATA HAS BEEN RECORDED** • Has the FREEZE FRAME DATA been recorded?	Yes	Go to the next step.
		No	Record the FREEZE FRAME DATA on the repair order, then go to the next step.
2	**VERIFY RELATED REPAIR INFORMATION AVAILABILITY** • Verify related Service Bulletins and/or on-line repair information availability. • Is any related repair information available?	Yes	Perform repair or diagnosis according to the available repair information. • If the vehicle is not repaired, go to the next step.
		No	Go to the next step.
3	**INSPECT VOLTAGE OF M RANGE SWITCH, UP SWITCH, AND DOWN SWITCH CIRCUIT** • Turn the ignition switch to the ON position. (engine off) • Shift the selector lever to any except M range. • Inspect for voltage between TCM short cord connector terminals (wiring harness-side) — Terminal G and ground (M range switch) — Terminal D and ground (up switch) — Terminal K and ground (down switch) • Is the voltage **B+**?	Yes	Go to go to Step 13.
		No	Go to the next step.
4	**INSPECT TERMINAL TCM SHORT CORD CONNECTOR FOR POOR CONNECTION** • Turn the ignition switch to the LOCK position. • Disconnect the TCM short cord connector. • Inspect for poor connection (such as damaged/ pulled-out pins, corrosion). • Are terminals normal?	Yes	Go to the next step.
		No	Replace the couple component, then go to Step 13.
5	**INSPECT TCM CONNECTOR FOR POOR CONNECTION** • Disconnect the TCM connector. • Inspect for poor connection (such as damaged/ pulled-out pins, corrosion). • Are terminals normal?	Yes	Go to the next step.
		No	Replace the couple component, then go to Step 13.
6	**INSPECT TCM SHORT CORD CIRCUIT FOR OPEN CIRCUIT** • Inspect for continuity between TCM short cord connector terminals and TCM terminals (wiring harness-side). — Terminal G and terminal A7 (M range switch) — Terminal D and terminal A3 (up switch) — Terminal K and terminal A4 (down switch) • Is there continuity?	Yes	Go to the next step.
		No	Repair or replace the harness, then go to Step 13.
7	**INSPECT TCM SHORT CORD CIRCUIT FOR SHORT TO GROUND** • Inspect for continuity between TCM short cord connector terminals (wiring harness-side) and body ground. — Terminal G and body ground (M range switch) — Terminal D and body ground (up switch) — Terminal K and body ground (down switch) • Is there continuity?	Yes	Repair or replace the harness, then go to the next step.
		No	Go to the next step.
8	**INSPECT SELECTOR LEVER COMPONENT FOR POOR CONNECTION** • Disconnect the selector lever component connector. • Inspect for poor connection (such as damaged/ pulled-out pins, corrosion). • Are terminals normal?	Yes	Go to the next step.
		No	Replace the couple component, then go to Step 13.

STEP	INSPECTION		ACTION
9	**INSPECT M RANGE SWITCH, UP SWITCH, AND DOWN SWITCH CIRCUIT FOR SHORT TO GROUND** • Inspect for continuity between selector lever component terminals (wiring harness-side) and body ground. — Terminal C and body ground (M range switch) — Terminal A and body ground (up switch) — Terminal B and body ground (down switch) • Is there continuity?	Yes	Repair or replace the harness, then go to Step 13.
		No	Go to the next step.
10	**INSPECT M RANGE SWITCH, UP SWITCH, AND DOWN SWITCH** • Inspect the M range switch, up switch, and down switch. (See 05–18–6 SELECTOR LEVER INSPECTION) • Are the switches normal?	Yes	Go to the next step.
		No	Replace the selector lever, then go to Step 13. (See 05–18–7 SELECTOR LEVER COMPONENT REMOVAL/INSTALLATION.)
11	**INSPECT M RANGE SWITCH, UP SWITCH, AND DOWN SWITCH CIRCUIT FOR OPEN CIRCUIT** • Inspect for continuity between selector lever component terminal D (wiring harness-side) and body ground. • Is there continuity?	Yes	Go to the next step.
		No	Repair or replace the harness, then go to Step 13.
12	**INSPECT M RANGE SWITCH, UP SWITCH, AND DOWN SWITCH CIRCUIT FOR OPEN CIRCUIT** • Inspect for continuity between TCM short cord connector terminals and selector lever component terminals (wiring harness-side). — Terminal G and terminal C (M range switch) — Terminal D and terminal A (up switch) — Terminal K and terminal B (down switch) • Is there continuity?	Yes	Go to the next step.
		No	Repair or replace the harness, then go to the next step.
13	**VERIFY TROUBLESHOOTING OF DTC P0819 COMPLETED** • Make sure to reconnect all the disconnected connectors. • Clear the DTC from the memory using the WDS or equivalent. • Drive the vehicle in M range, and change gears by shifting the selector lever (operating the up and down switches). • Is same DTC present?	Yes	Replace the TCM, then go to the next step. (See 05–17B–25 TCM REMOVAL/INSTALLATION [AW6A-EL].)
		No	Go to the next step.
14	**VERIFY AFTER REPAIR PROCEDURE** • Perform the "After Repair Procedure". (See 05–02B–4 AFTER REPAIR PROCEDURE [AW6A-EL].) • Are any DTCs present?	Yes	Go to the applicable DTC inspection. (See 05–02B–5 DTC TABLE [AW6A-EL].)
		No	Troubleshooting completed.

DTC P0882 [AW6A-EL]

E6U050200000W28

DTC P0882	TCM B+ low
DETECTION CONDITION	• Voltage of less than 9 V detected at TCM terminals A1 and A11 when engine is running. **Diagnostic support note:** • This is a continuous monitor (CCM). • The MIL does not illuminate if the TCM detects the above malfunction condition during the first drive cycle. • A PENDING CODE is not available. • FREEZE FRAME DATA is available. • The AT warning light not illuminates. • The DTC is stored in the TCM memory.
POSSIBLE CAUSE	• Melted METER IG 15 A fuse • Melted TCM 10 A fuse • Open circuit in wiring harness between TCM 10 A fuse and TCM terminal A1 • Open circuit in wiring harness between METER IG 15 A fuse and TCM terminal A11 • Open circuit in wiring harness between TCM terminal A9 and body ground • Short to ground in wiring harness between TCM 10 A fuse and TCM terminal A1 • Short to ground in wiring harness between ROOM 15 A fuse and TCM terminal A11 • Poor connection of TCM connector • TCM malfunction

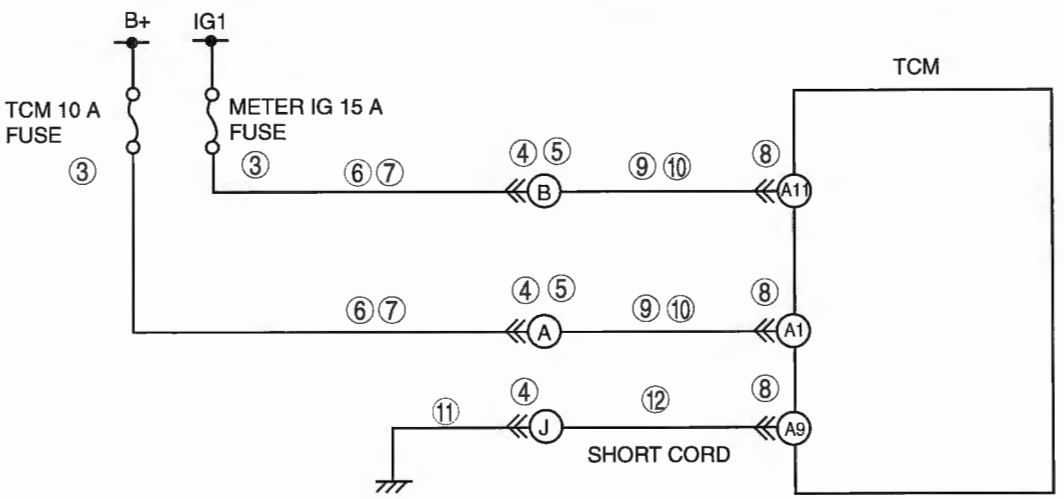

TCM SHORT CORD CONNECTOR (WIRING HARNESS-SIDE)

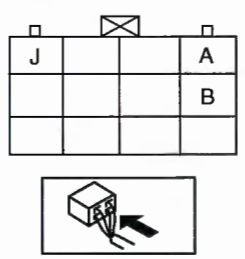

TCM SHORT CORD CONNECTOR (TCM SIDE)

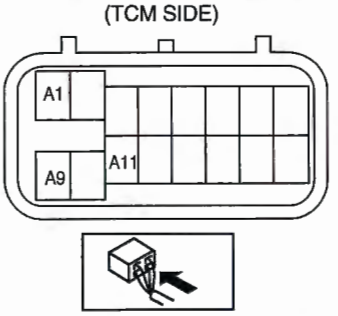

Diagnostic procedure

STEP	INSPECTION		ACTION
1	**VERIFY FREEZE FRAME DATA HAS BEEN RECORDED** • Has the FREEZE FRAME DATA been recorded?	Yes	Go to the next step.
		No	Record the FREEZE FRAME DATA on the repair order, then go to the next step.
2	**VERIFY RELATED REPAIR INFORMATION AVAILABILITY** • Verify related Service Bulletins and/or on-line repair information availability. • Is any related repair information available?	Yes	Perform repair or diagnosis according to the available repair information. • If the vehicle is not repaired, go to the next step.
		No	Go to the next step.
3	**INSPECT FUSE** • Turn the ignition switch to the LOCK position. • Inspect METER IG 15 A fuse and TCM 10 A fuse for malfunction. • Is it normal?	Yes	Go to the next step.
		No	• If fuse has been melted, go to the next step. • If fuse is not installed correctly, install it correctly, then go to Step 13.
4	**INSPECT VOLTAGE OF POWER SUPPLY CIRCUIT** • Turn the ignition switch to the ON position (engine off). • Inspect for voltage TCM short cord connector terminal A and B (wiring harness-side). • Is the voltage **B+**?	Yes	Go to go to Step 8.
		No	Go to the next step.
5	**INSPECT TERMINAL TCM SHORT CORD CONNECTOR FOR POOR CONNECTION** • Turn the ignition switch to the LOCK position. • Disconnect the TCM short cord connector. • Inspect for poor connection (such as damaged/ pulled-out pins, corrosion). • Are terminals normal?	Yes	Go to the next step.
		No	Replace the couple component, then go to Step 13.
6	**INSPECT POWER SUPPLY CIRCUIT FOR SHORT TO GROUND** • Disconnect the positive battery cable. • Inspect for continuity between the fuse terminals and body ground. — ROOM 15 A fuse terminal and body ground — TCM 10 A fuse terminal and body ground • Is there continuity?	Yes	Repair or replace the wiring harness and install new fuse, then go to Step 13.
		No	Go to the next step.
7	**INSPECT POWER SUPPLY CIRCUIT FOR OPEN CIRCUIT** • Inspect for continuity between TCM short cord connector terminals and fuse terminals (wiring harness-side). — Terminal A and TCM 10 A fuse — Terminal B and METER IG 15 A fuse • Is there continuity?	Yes	Go to Step 11.
		No	Repair or replace the harness, then go to Step 13.
8	**INSPECT TCM CONNECTOR FOR POOR CONNECTION** • Disconnect the TCM connector. • Inspect for poor connection (such as damaged/ pulled-out pins, corrosion). • Are terminals normal?	Yes	Go to the next step.
		No	Replace the couple component, then go to Step 13.
9	**INSPECT TCM SHORT CORD CIRCUIT FOR OPEN CIRCUIT** • Inspect for continuity between TCM short cord connector terminals and TCM terminals (wiring harness-side). — Terminal A and terminal A1 — Terminal B and terminal A11 • Is there continuity?	Yes	Go to the next step.
		No	Repair or replace the harness, then go to Step 13.

STEP	INSPECTION		ACTION
10	**INSPECT TCM SHORT CORD CIRCUIT FOR SHORT TO GROUND** • Inspect for continuity between TCM short cord connector terminals (wiring harness-side) and body ground. — Terminal A and body ground — Terminal B and body ground • Is there continuity?	Yes	Repair or replace the harness, then go to Step 13.
		No	Go to the next step.
11	**INSPECT GROUND CIRCUIT FOR OPEN CIRCUIT** • Inspect for continuity between TCM short cord connector terminal J (wiring harness-side) and body ground. • Is there continuity?	Yes	Go to the next step.
		No	Repair or replace the harness, then go to Step 13.
12	**INSPECT TCM SHORT CORD CIRCUIT FOR OPEN CIRCUIT** • Inspect for continuity between TCM short cord connector terminal J and TCM terminal A9 (wiring harness-side). • Is there continuity?	Yes	Go to the next step.
		No	Repair or replace the harness, then go to the next step.
13	**VERIFY TROUBLESHOOTING OF DTC P0882 COMPLETED** • Make sure to reconnect all the disconnected connectors. • Clear the DTC from the memory using the WDS or equivalent. • Start the engine and warm it up completely. • Is same DTC present?	Yes	Replace the TCM, then go to the next step. (See 05–17B–25 TCM REMOVAL/INSTALLATION [AW6A-EL].)
		No	Go to the next step.
14	**VERIFY AFTER REPAIR PROCEDURE** • Perform the "After Repair Procedure". (See 05–02B–4 AFTER REPAIR PROCEDURE [AW6A-EL].) • Are any DTCs present?	Yes	Go to the applicable DTC inspection. (See 05–02B–5 DTC TABLE [AW6A-EL].)
		No	Troubleshooting completed.

DTC P0883 [AW6A-EL]

E6U050200000W29

DTC P0883	TCM B+ high
DETECTION CONDITION	• Voltage of 18 V or more detected at TCM terminals A1 and A11 when engine is running. **Diagnostic support note:** • This is a continuous monitor (CCM). • The MIL does not illuminate if the TCM detects the above malfunction condition during the first drive cycle. • A PENDING CODE is not available. • FREEZE FRAME DATA is available. • The AT warning light not illuminates. • The DTC is stored in the TCM memory.
POSSIBLE CAUSE	• Generator malfunction • TCM malfunction

Diagnostic procedure

STEP	INSPECTION		ACTION
1	**VERIFY FREEZE FRAME DATA HAS BEEN RECORDED** • Has the FREEZE FRAME DATA been recorded?	Yes	Go to the next step.
		No	Record the FREEZE FRAME DATA on the repair order, then go to the next step.
2	**VERIFY RELATED REPAIR INFORMATION AVAILABILITY** • Verify related Service Bulletins and/or on-line repair information availability. • Is any related repair information available?	Yes	Perform repair or diagnosis according to the available repair information. • If the vehicle is not repaired, go to the next step.
		No	Go to the next step.
3	**VERIFY DTC** • Turn the ignition switch to the LOCK position, then to the ON position. • Verify the DTC in the PCM memory. • Are DTC P2504 output?	Yes	Go to the applicable DTC inspection. (See 01–02C–13 DTC TABLE [AJ].)
		No	Go to the next step.
4	**VERIFY TROUBLESHOOTING OF DTC P0883 COMPLETED** • Make sure to reconnect all the disconnected connectors. • Clear the DTC from the memory using the WDS or equivalent. • Start the engine and warm it up completely. • Is same DTC present?	Yes	Replace the TCM, then go to the next step. (See 05–17B–25 TCM REMOVAL/INSTALLATION [AW6A-EL].)
		No	Go to the next step.
5	**VERIFY AFTER REPAIR PROCEDURE** • Perform the "After Repair Procedure". (See 05–02B–4 AFTER REPAIR PROCEDURE [AW6A-EL].) • Are any DTCs present?	Yes	Go to the applicable DTC inspection. (See 05–02B–5 DTC TABLE [AW6A-EL].)
		No	Troubleshooting completed.

DTC P0942 [AW6A-EL]

E6U050200000W30

DTC P0942	Valve control solenoid circuit malfunction at D range (valve stuck)
DETECTION CONDITION	• Difference of less than 150 rpm between engine and turbine speeds detected when following conditions are satisfied while driving: **Monitoring condition:** — Engine running — Driving in D range — Counter drive gear (output) revolution speed **500 rpm or more** (VSS) — None of the following present: DTC P0706, P0707, P0708, P0711, P0712, P0713, P0717, P0722, P0961, P0962, P0963, P0973, P0974, P0976, P0977, P0978, P0979, P0980, P0981, P0982, P0983, P0984, P0985, P0986, P0997, P0998, P0999 **Diagnostic support note:** • This is a continuous monitor (CCM). • The MIL illuminates if the TCM detects the above malfunction condition during the first drive cycle. • A PENDING CODE is not available. • FREEZE FRAME DATA is available. • The AT warning light illuminates. • The DTC is stored in the TCM memory.
POSSIBLE CAUSE	• Shift solenoid A stuck • Shift solenoid B stuck • Shift solenoid C stuck • Line pressure control solenoid stuck • C1 clutch slipping • Control valve stuck • TCM malfunction

Diagnostic procedure

STEP	INSPECTION		ACTION
1	**VERIFY FREEZE FRAME DATA HAS BEEN RECORDED** • Has the FREEZE FRAME DATA been recorded?	Yes	Go to the next step.
		No	Record the FREEZE FRAME DATA on the repair order, then go to the next step.
2	**VERIFY RELATED REPAIR INFORMATION AVAILABILITY** • Verify related Service Bulletins and/or on-line repair information availability. • Is any related repair information available?	Yes	Perform repair or diagnosis according to the available repair information. • If the vehicle is not repaired, go to the next step.
		No	Go to the next step.
3	**INSPECT LINE PRESSURE** • Start the engine. • Measure the line pressures. (See 05–17B–4 Line Pressure Test.) • Are the line pressures within the specifications?	Yes	Go to the next step.
		No	All ranges: Replace the oil pump, then go to Step 6. Any ranges: Replace the control valve body, then go to Step 6. (See 05–17B–39 CONTROL VALVE BODY REMOVAL/INSTALLATION [AW6A-EL].)
4	**INSPECT STALL SPEED** • Measure the stall speed in D range. (See 05–17B–6 Stall Test.) • Is the stall speed within the specification?	Yes	Go to the next step.
		No	Replace the automatic transaxle, then go the Step 6. (See 05–17B–30 AUTOMATIC TRANSAXLE REMOVAL/INSTALLATION [AW6A-EL].)
5	**INSPECT SOLENOID VALVE** • Inspect the solenoid valve. (See 05–17B–20 SOLENOID VALVE INSPECTION [AW6A-EL].) • Is it normal?	Yes	Go to the next step.
		No	Replace the control valve body, then go to the next step. (See 05–17B–39 CONTROL VALVE BODY REMOVAL/INSTALLATION [AW6A-EL].)
6	**VERIFY TROUBLESHOOTING OF DTC P0942 COMPLETED** • Make sure to reconnect all the disconnected connectors. • Clear the DTC from the memory using the WDS or equivalent. • Drive the vehicle in D range and make sure that gears shift smoothly from 1GR to 6GR. • Is same DTC present?	Yes	Replace the TCM, then go to the next step. (See 05–17B–25 TCM REMOVAL/INSTALLATION [AW6A-EL].)
		No	Go to the next step.
7	**VERIFY AFTER REPAIR PROCEDURE** • Perform the "After Repair Procedure". (See 05–02B–4 AFTER REPAIR PROCEDURE [AW6A-EL].) • Are any DTCs present?	Yes	Go to the applicable DTC inspection. (See 05–02B–5 DTC TABLE [AW6A-EL].)
		No	Troubleshooting completed.

DTC P0961 [AW6A-EL]

E6U050200000W31

DTC P0961	Line pressure control solenoid range/performance (stuck)
DETECTION CONDITION	• Feedback current corresponding to solenoid current command value is irregular when engine is running. **Diagnostic support note:** • This is a continuous monitor (CCM). • The MIL illuminates if the TCM detects the above malfunction condition during the first drive cycle. • A PENDING CODE is not available. • FREEZE FRAME DATA is available. • The AT warning light illuminates. • The DTC is stored in the TCM memory.
POSSIBLE CAUSE	• ATF level low • Deteriorated ATF • Line pressure control solenoid stuck • Control valve stuck • TCM malfunction

Diagnostic procedure

STEP	INSPECTION		ACTION
1	**VERIFY FREEZE FRAME DATA HAS BEEN RECORDED** • Has the FREEZE FRAME DATA been recorded?	Yes	Go to the next step.
		No	Record the FREEZE FRAME DATA on the repair order, then go to the next step.
2	**VERIFY RELATED REPAIR INFORMATION AVAILABILITY** • Verify related Service Bulletins and/or on-line repair information availability. • Is any related repair information available?	Yes	Perform repair or diagnosis according to the available repair information. • If the vehicle is not repaired, go to the next step.
		No	Go to the next step.
3	**INSPECT ATF CONDITION** • Turn the ignition switch to the LOCK position. • Inspect the ATF condition. — Clear red: Normal — Light red (pink): Water mixed in fluid — Reddish brown: Deteriorated ATF • Is it normal? (See 05–17B–11 Automatic Transaxle Fluid (ATF) Condition Inspection.)	Yes	Go to the next step.
		No	If the ATF color is light red or reddish brown, replace ATF, then go to Step 6. (See 05–17B–12 AUTOMATIC TRANSAXLE FLUID (ATF) REPLACEMENT [AW6A-EL].)
4	**INSPECT ATF LEVEL** • Start the engine. • Warm up the ATX. • Is the ATF level within the specification? (See 05–17B–12 Automatic Transaxle Fluid (ATF) Level Inspection.)	Yes	Go to the next step.
		No	Add ATF to the specified level, then go to Step 6. (See 05–17B–12 Automatic Transaxle Fluid (ATF) Level Inspection.)
5	**INSPECT LINE PRESSURE** • Start the engine. • Measure the line pressures. (See 05–17B–4 Line Pressure Test.) • Are the line pressures within the specifications?	Yes	Go to the next step.
		No	• All ranges: Replace the oil pump or control valve body, then go to the next step. • Any ranges: Replace the ATX, then go the next step. (See 05–17B–30 AUTOMATIC TRANSAXLE REMOVAL/INSTALLATION [AW6A-EL].)
6	**VERIFY TROUBLESHOOTING OF DTC P0961 COMPLETED** • Make sure to reconnect all the disconnected connectors. • Clear the DTC from the memory using the WDS or equivalent. • Drive the vehicle in D range and make sure that gears shift smoothly from 1GR to 6GR. • Is same DTC present?	Yes	Replace the TCM, then go to the next step. (See 05–17B–25 TCM REMOVAL/INSTALLATION [AW6A-EL].)
		No	Go to the next step.
7	**VERIFY AFTER REPAIR PROCEDURE** • Perform the "After Repair Procedure". (See 05–02B–4 AFTER REPAIR PROCEDURE [AW6A-EL].) • Are any DTCs present?	Yes	Go to the applicable DTC inspection. (See 05–02B–5 DTC TABLE [AW6A-EL].)
		No	Troubleshooting completed.

DTC P0962 [AW6A-EL]

E6U050200000W32

DTC P0962	Line pressure control solenoid circuit malfunction (short to ground/open circuit)
DETECTION CONDITION	• Open or short circuit in line pressure control solenoid signal system (The solenoid circuit current value input to the TCM is continuously **less than 23 mA** for **100 ms or more**). **Diagnostic support note:** • This is a continuous monitor (CCM). • The MIL illuminates if the TCM detects the above malfunction condition during the first drive cycle. • A PENDING CODE is not available. • FREEZE FRAME DATA is available. • The AT warning light illuminates. • The DTC is stored in the TCM memory.
POSSIBLE CAUSE	• Open circuit between line pressure control solenoid terminal B and TCM terminal B3 • Open circuit between line pressure control solenoid terminal A and TCM terminal B1 • Short to ground in wiring harness between line pressure control solenoid terminal B and TCM terminal B3 • Short to ground in wiring harness between line pressure control solenoid terminal A and TCM terminal B1 • Line pressure control solenoid malfunction • Damaged connector between line pressure control solenoid and TCM • TCM malfunction

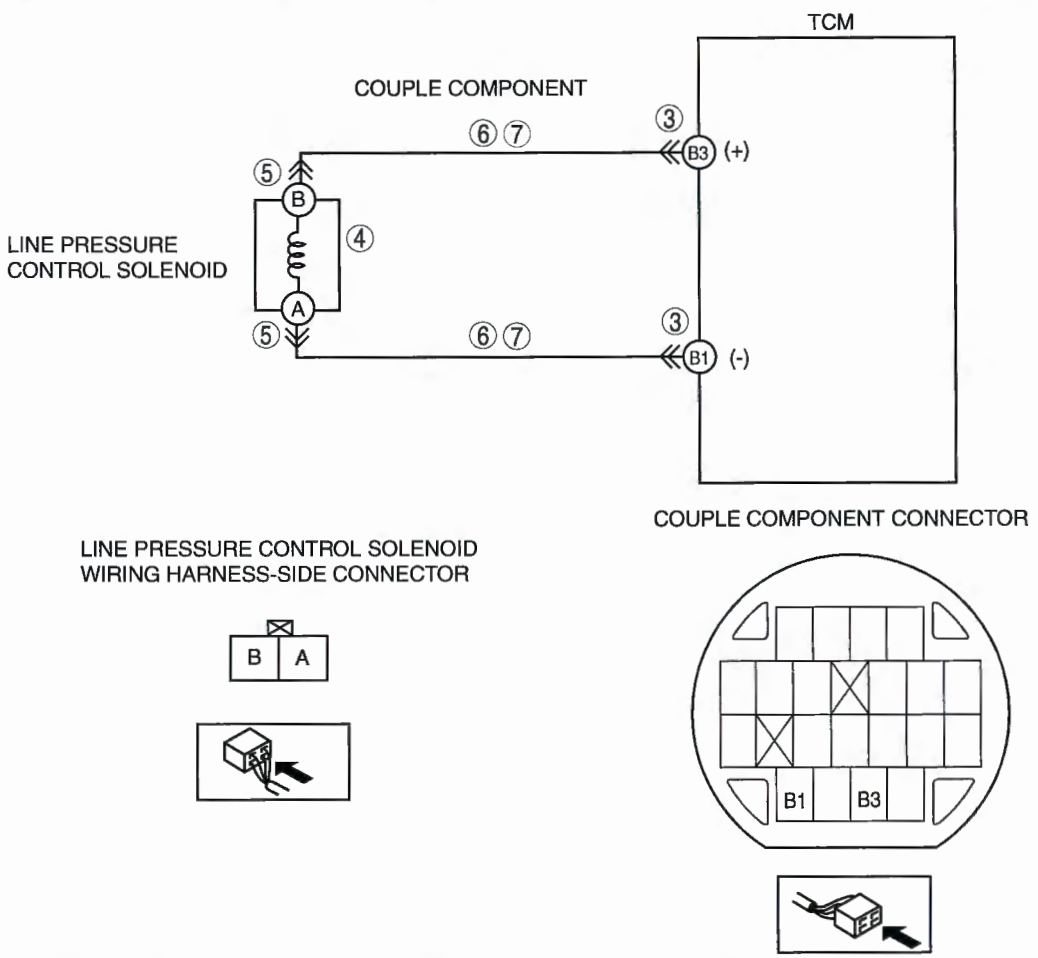

Diagnostic procedure

STEP	INSPECTION		ACTION
1	**VERIFY FREEZE FRAME DATA HAS BEEN RECORDED** • Has the FREEZE FRAME DATA been recorded?	Yes	Go to the next step.
		No	Record the FREEZE FRAME DATA on the repair order, then go to the next step.
2	**VERIFY RELATED REPAIR INFORMATION AVAILABILITY** • Verify related Service Bulletins and/or on-line repair information availability. • Is any related repair information available?	Yes	Perform repair or diagnosis according to the available repair information. • If the vehicle is not repaired, go to the next step.
		No	Go to the next step.
3	**INSPECT TERMINAL COUPLE COMPONENT FOR POOR CONNECTION** • Turn the ignition switch to the LOCK position. • Remove the TCM. (See 05–17B–25 TCM REMOVAL/ INSTALLATION [AW6A-EL].) • Inspect for poor connection (such as damaged/ pulled-out pins, corrosion). • Are terminals normal?	Yes	Go to the next step.
		No	Replace the couple component, then go to Step 8.
4	**INSPECT RESISTANCE OF LINE PRESSURE CONTROL SOLENOID CIRCUIT** • Inspect for resistance between couple component terminals B3 and B1 (wiring harness-side). • Is resistance **within 5.0—5.6 ohms**? (See 05–17B–20 SOLENOID VALVE INSPECTION [AW6A-EL].)	Yes	Go to go to Step 8.
		No	Go to the next step.
5	**INSPECT TERMINAL LINE PRESSURE CONTROL SOLENOID FOR POOR CONNECTION** • Disconnect the line pressure control solenoid connector. • Inspect for poor connection (such as damaged/ pulled-out pins, corrosion). • Are terminals normal?	Yes	Go to the next step.
		No	Replace the couple component, then go to Step 8.
6	**INSPECT TERMINAL COUPLE COMPONENT CIRCUIT FOR OPEN CIRCUIT** • Inspect for continuity between couple component terminals and line pressure control solenoid terminals (wiring harness-side). — Terminal B3 and terminal B — Terminal B1 and terminal A • Is there continuity?	Yes	Go to the next step.
		No	Repair or replace the couple component, then go to Step 8.
7	**INSPECT TERMINAL COUPLE COMPONENT CIRCUIT FOR SHORT TO GROUND** • Inspect for continuity between couple component terminals (wiring harness-side). — Terminal B3 and all terminals except B3/B1 — Terminal B1 and all terminals except B3/B1 • Is there continuity?	Yes	Repair or replace the couple component, then go to the next step.
		No	Replace the control valve body, then go to the next step. (See 05–17B–39 CONTROL VALVE BODY REMOVAL/ INSTALLATION [AW6A-EL].)
8	**VERIFY TROUBLESHOOTING OF DTC P0962 COMPLETED** • Make sure to reconnect all the disconnected connectors. • Clear the DTC from the memory using the WDS or equivalent. • Drive the vehicle in D range and make sure that gears shift smoothly from 1GR to 6GR. • Is same DTC present?	Yes	Replace the TCM, then go to the next step. (See 05–17B–25 TCM REMOVAL/INSTALLATION [AW6A-EL].)
		No	Go to the next step.
9	**VERIFY AFTER REPAIR PROCEDURE** • Perform the "After Repair Procedure". (See 05–02B–4 AFTER REPAIR PROCEDURE [AW6A-EL].) • Are any DTCs present?	Yes	Go to the applicable DTC inspection. (See 05–02B–5 DTC TABLE [AW6A-EL].)
		No	Troubleshooting completed.

DTC P0963 [AW6A-EL]

E6U050200000W33

DTC P0963	Line pressure control solenoid circuit malfunction (short to power)
DETECTION CONDITION	• Short circuit in line pressure control solenoid signal system (The solenoid circuit current value input to the TCM is continuously **more than 1,333 mA** for **100 ms or more**). **Diagnostic support note:** • This is a continuous monitor (CCM). • The MIL illuminates if the TCM detects the above malfunction condition during the first drive cycle. • A PENDING CODE is not available. • FREEZE FRAME DATA is available. • The AT warning light illuminates. • The DTC is stored in the TCM memory.
POSSIBLE CAUSE	• Short to power in wiring harness between line pressure control solenoid terminal B and TCM terminal B3 • Short to power in wiring harness between line pressure control solenoid terminal A and TCM terminal B1 • Line pressure control solenoid malfunction • Damaged connector between line pressure control solenoid and TCM • TCM malfunction

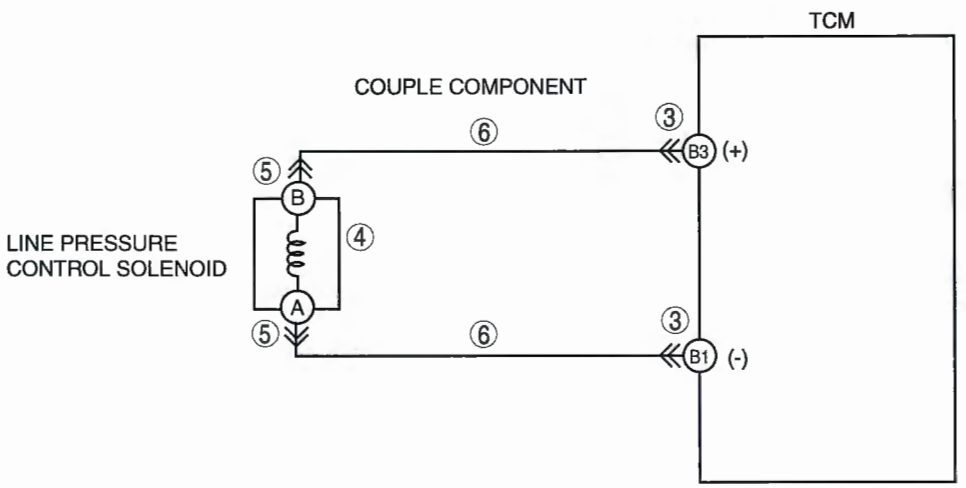

COUPLE COMPONENT CONNECTOR

LINE PRESSURE CONTROL SOLENOID
WIRING HARNESS-SIDE CONNECTOR

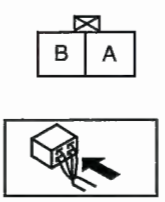

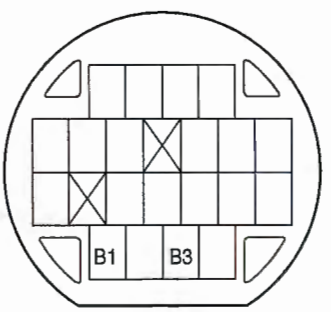

Diagnostic procedure

STEP	INSPECTION		ACTION
1	**VERIFY FREEZE FRAME DATA HAS BEEN RECORDED** • Has the FREEZE FRAME DATA been recorded?	Yes	Go to the next step.
		No	Record the FREEZE FRAME DATA on the repair order, then go to the next step.
2	**VERIFY RELATED REPAIR INFORMATION AVAILABILITY** • Verify related Service Bulletins and/or on-line repair information availability. • Is any related repair information available?	Yes	Perform repair or diagnosis according to the available repair information. • If the vehicle is not repaired, go to the next step.
		No	Go to the next step.
3	**INSPECT TERMINAL COUPLE COMPONENT FOR POOR CONNECTION** • Turn the ignition switch to the LOCK position. • Remove the TCM. (See 05–17B–25 TCM REMOVAL/ INSTALLATION [AW6A-EL].) • Inspect for poor connection (such as damaged/ pulled-out pins, corrosion). • Are terminals normal?	Yes	Go to the next step.
		No	Replace the couple component, then go to Step 7.
4	**INSPECT RESISTANCE OF LINE PRESSURE CONTROL SOLENOID CIRCUIT** • Inspect for resistance between couple component terminals B3 and B1 (wiring harness-side). • Is resistance **within 5.0—5.6 ohms**? (See 05–17B–20 SOLENOID VALVE INSPECTION [AW6A-EL].)	Yes	Go to go to Step 7.
		No	Go to the next step.
5	**INSPECT TERMINAL LINE PRESSURE CONTROL SOLENOID FOR POOR CONNECTION** • Disconnect the line pressure control solenoid connector. • Inspect for poor connection (such as damaged/ pulled-out pins, corrosion). • Are terminals normal?	Yes	Go to the next step.
		No	Replace the couple component, then go to Step 7.
6	**INSPECT TERMINAL COUPLE COMPONENT CIRCUIT FOR SHORT TO POWER** • Inspect for continuity between couple component terminals (wiring harness-side). — Terminal B3 and all terminals except B3/B1 — Terminal B1 and all terminals except B3/B1 • Is there continuity?	Yes	Repair or replace the couple component, then go to the next step.
		No	Replace the control valve body, then go to the next step. (See 05–17B–39 CONTROL VALVE BODY REMOVAL/ INSTALLATION [AW6A-EL].)
7	**VERIFY TROUBLESHOOTING OF DTC P0963 COMPLETED** • Make sure to reconnect all the disconnected connectors. • Clear the DTC from the memory using the WDS or equivalent. • Drive the vehicle in D range and make sure that gears shift smoothly from 1GR to 6GR. • Is same DTC present?	Yes	Replace the TCM, then go to the next step. (See 05–17B–25 TCM REMOVAL/INSTALLATION [AW6A-EL].)
		No	Go to the next step.
8	**VERIFY AFTER REPAIR PROCEDURE** • Perform the "After Repair Procedure". (See 05–02B–4 AFTER REPAIR PROCEDURE [AW6A-EL].) • Are any DTCs present?	Yes	Go to the applicable DTC inspection. (See 05–02B–5 DTC TABLE [AW6A-EL].)
		No	Troubleshooting completed.

DTC P0973 [AW6A-EL]

E6U050200000W34

DTC P0973	Shift solenoid A circuit malfunction (short to ground)
DETECTION CONDITION	• Short to ground in shift solenoid A signal system (The solenoid remains off continuously for **100 ms or more** even if the TCM sends a solenoid on command). **Diagnostic support note:** • This is continuous monitor (CCM). • The MIL illuminates if the TCM detects the above malfunction condition during first drive cycle. • A PENDING CODE is not available. • FREEZE FRAME DATA is available. • The AT warning light illuminates. • The DTC is stored in the TCM memory.
POSSIBLE CAUSE	• Short to ground in wiring harness between shift solenoid A terminal A and TCM terminal B5 • Shift solenoid A malfunction • Damaged connector between shift solenoid A and TCM • TCM malfunction

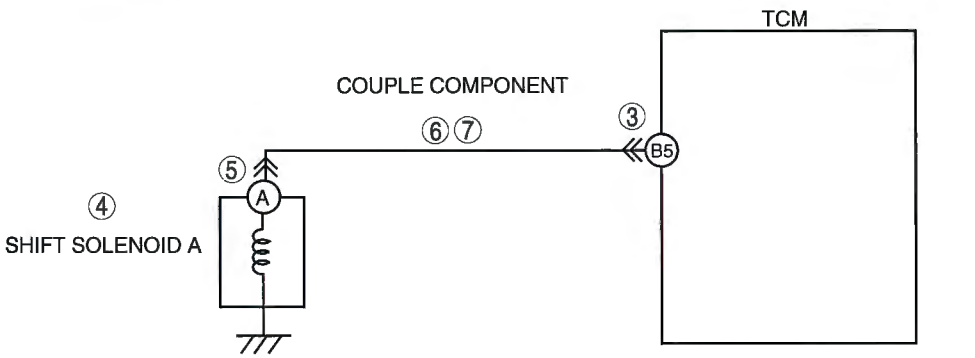

COUPLE COMPONENT CONNECTOR

SHIFT SOLENOID A WIRING HARNESS-SIDE CONNECTOR

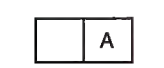

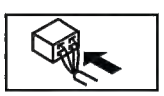

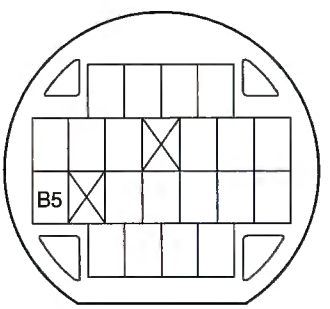

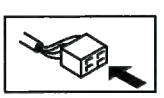

Diagnostic procedure

STEP	INSPECTION		ACTION
1	**VERIFY FREEZE FRAME DATA HAS BEEN RECORDED** • Has the FREEZE FRAME DATA been recorded?	Yes	Go to the next step.
		No	Record the FREEZE FRAME DATA on the repair order, then go to the next step.
2	**VERIFY RELATED REPAIR INFORMATION AVAILABILITY** • Verify related Service Bulletins and/or on-line repair information availability. • Is any related repair information available?	Yes	Perform repair or diagnosis according to the available repair information. • If the vehicle is not repaired, go to the next step.
		No	Go to the next step.
3	**INSPECT TERMINAL COUPLE COMPONENT FOR POOR CONNECTION** • Turn the ignition switch to the LOCK position. • Remove the TCM. (See 05–17B–25 TCM REMOVAL/ INSTALLATION [AW6A-EL].) • Inspect for poor connection (such as damaged/ pulled-out pins, corrosion). • Are terminals normal?	Yes	Go to the next step.
		No	Replace the couple component, then go to Step 7.
4	**INSPECT RESISTANCE OF SHIFT SOLENOID A CIRCUIT** • Inspect for resistance between couple component terminal B5 (wiring harness-side) and ground. • Is resistance **within 11—15 ohms**? (See 05–17B–20 SOLENOID VALVE INSPECTION [AW6A-EL].)	Yes	Go to go to Step 7.
		No	Go to the next step.
5	**INSPECT TERMINAL SHIFT SOLENOID A FOR POOR CONNECTION** • Disconnect the shift solenoid A connector. • Inspect for poor connection (such as damaged/ pulled-out pins, corrosion). • Are terminals normal?	Yes	Go to the next step.
		No	Replace the couple component, then go to Step 7.
6	**INSPECT TERMINAL COUPLE COMPONENT CIRCUIT FOR SHORT TO GROUND** • Inspect for continuity between couple component terminal B5 and all terminals except B5 (wiring harness-side). • Is there continuity?	Yes	Repair or replace the couple component, then go to the next step.
		No	Replace the control valve body, then go to the next step. (See 05–17B–39 CONTROL VALVE BODY REMOVAL/ INSTALLATION [AW6A-EL].)
7	**VERIFY TROUBLESHOOTING OF DTC P0973 COMPLETED** • Make sure to reconnect all the disconnected connectors. • Clear the DTC from the memory using the WDS or equivalent. • Drive the vehicle in D range and make sure that gears shift smoothly from 1GR to 6GR. • Is same DTC present?	Yes	Replace the TCM, then go to the next step. (See 05–17B–25 TCM REMOVAL/INSTALLATION [AW6A-EL].)
		No	Go to the next step.
8	**VERIFY AFTER REPAIR PROCEDURE** • Perform the "After Repair Procedure". (See 05–02B–4 AFTER REPAIR PROCEDURE [AW6A-EL].) • Are any DTCs present?	Yes	Go to the applicable DTC inspection. (See 05–02B–5 DTC TABLE [AW6A-EL].)
		No	Troubleshooting completed.

DTC P0974 [AW6A-EL]

E6U050200000W35

DTC P0974	Shift solenoid A circuit malfunction (short to power/open circuit)
DETECTION CONDITION	• Open or short circuit in shift solenoid A signal system (The solenoid remains on continuously for **100 ms or more** even if the TCM sends a solenoid off command). **Diagnostic support note:** • This is continuous monitor (CCM). • The MIL illuminates if the TCM detects the above malfunction condition during first drive cycle. • A PENDING CODE is not available. • FREEZE FRAME DATA is available. • The AT warning light illuminates. • The DTC is stored in the TCM memory.
POSSIBLE CAUSE	• Open circuit in wiring harness between shift solenoid A terminal A and TCM terminal B5 • Short to power in wiring harness between shift solenoid A terminal A and TCM terminal B5 • Shift solenoid A malfunction • Damaged connector between shift solenoid A and TCM • TCM malfunction

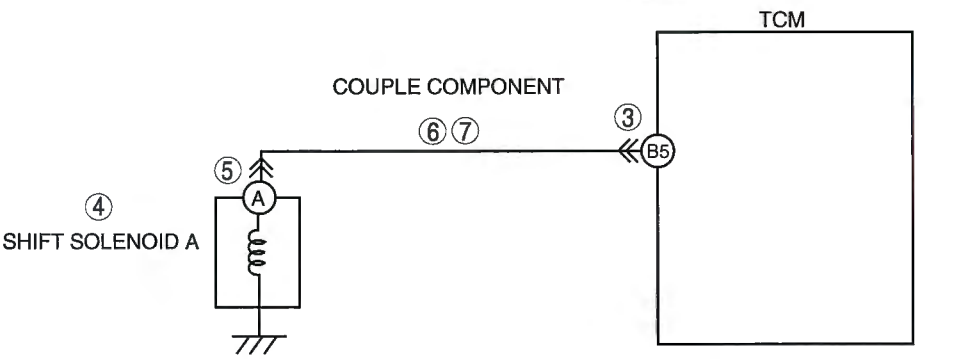

COUPLE COMPONENT CONNECTOR

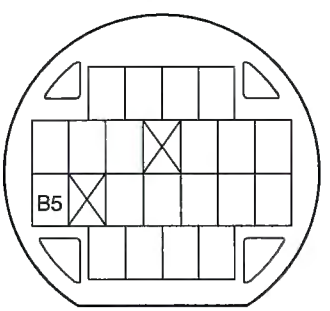

SHIFT SOLENOID A WIRING HARNESS-SIDE CONNECTOR



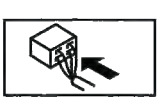

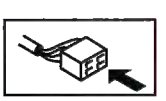

Diagnostic procedure

STEP	INSPECTION		ACTION
1	**VERIFY FREEZE FRAME DATA HAS BEEN RECORDED** • Has the FREEZE FRAME DATA been recorded?	Yes	Go to the next step.
		No	Record the FREEZE FRAME DATA on the repair order, then go to the next step.
2	**VERIFY RELATED REPAIR INFORMATION AVAILABILITY** • Verify related Service Bulletins and/or on-line repair information availability. • Is any related repair information available?	Yes	Perform repair or diagnosis according to the available repair information. • If the vehicle is not repaired, go to the next step.
		No	Go to the next step.
3	**INSPECT TERMINAL COUPLE COMPONENT FOR POOR CONNECTION** • Turn the ignition switch to the LOCK position. • Remove the TCM. (See 05–17B–25 TCM REMOVAL/ INSTALLATION [AW6A-EL].) • Inspect for poor connection (such as damaged/ pulled-out pins, corrosion). • Are terminals normal?	Yes	Go to the next step.
		No	Replace the couple component, then go to Step 8.
4	**INSPECT RESISTANCE OF SHIFT SOLENOID A CIRCUIT** • Inspect for resistance between couple component terminal B5 (wiring harness-side) and ground. • Is resistance **within 11—15 ohms**? (See 05–17B–20 SOLENOID VALVE INSPECTION [AW6A-EL].)	Yes	Go to go to Step 8.
		No	Go to the next step.
5	**INSPECT TERMINAL SHIFT SOLENOID A FOR POOR CONNECTION** • Disconnect the shift solenoid A connector. • Inspect for poor connection (such as damaged/ pulled-out pins, corrosion). • Are terminals normal?	Yes	Go to the next step.
		No	Replace the couple component, then go to Step 8.
6	**INSPECT TERMINAL COUPLE COMPONENT CIRCUIT FOR OPEN CIRCUIT** • Inspect for continuity between couple component terminal B5 (wiring harness-side) and shift solenoid A terminal A wiring harness-side). • Is there continuity?	Yes	Go to the next step.
		No	Repair or replace the couple component, then go to Step 8.
7	**INSPECT TERMINAL COUPLE COMPONENT CIRCUIT FOR SHORT TO POWER** • Inspect for continuity between couple component terminal B5 and all terminals except B5 (wiring harness-side). • Is there continuity?	Yes	Repair or replace the couple component, then go to the next step.
		No	Replace the control valve body, then go to the next step. (See 05–17B–39 CONTROL VALVE BODY REMOVAL/ INSTALLATION [AW6A-EL].)
8	**VERIFY TROUBLESHOOTING OF DTC P0974 COMPLETED** • Make sure to reconnect all the disconnected connectors. • Clear the DTC from the memory using the WDS or equivalent. • Drive the vehicle in D range and make sure that gears shift smoothly from 1GR to 6GR. • Is same DTC present?	Yes	Replace the TCM, then go to the next step. (See 05–17B–25 TCM REMOVAL/INSTALLATION [AW6A-EL].)
		No	Go to the next step.
9	**VERIFY AFTER REPAIR PROCEDURE** • Perform the "After Repair Procedure". (See 05–02B–4 AFTER REPAIR PROCEDURE [AW6A-EL].) • Are any DTCs present?	Yes	Go to the applicable DTC inspection. (See 05–02B–5 DTC TABLE [AW6A-EL].)
		No	Troubleshooting completed.

DTC P0976 [AW6A-EL]

E6U050200000W36

DTC P0976	Shift solenoid B circuit malfunction (short to ground)
DETECTION CONDITION	• Short to ground in shift solenoid B signal system (The solenoid remains off continuously for **100 ms or more** even if the TCM sends a solenoid on command). **Diagnostic support note:** • The MIL illuminates if the TCM detects the above malfunction condition during first drive cycle. • A PENDING CODE is not available. • FREEZE FRAME DATA is available. • The AT warning light illuminates. • The DTC is stored in the TCM memory.
POSSIBLE CAUSE	• Short to ground in wiring harness between shift solenoid B terminal A and TCM terminal B2 • Shift solenoid B malfunction • Damaged connector between shift solenoid B and TCM • TCM malfunction

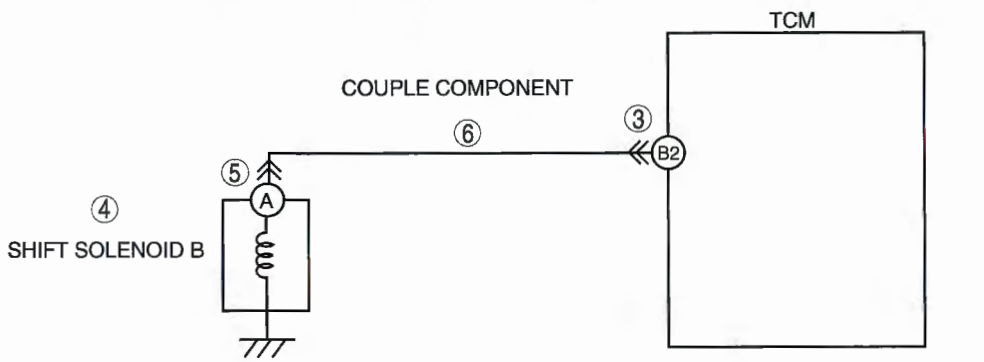

COUPLE COMPONENT CONNECTOR

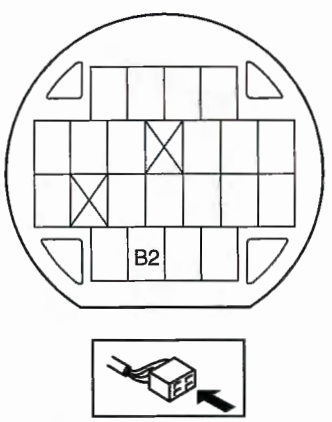

SHIFT SOLENOID B WIRING HARNESS-SIDE CONNECTOR

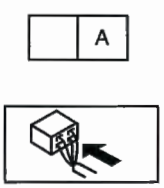

Diagnostic procedure

STEP	INSPECTION		ACTION
1	**VERIFY FREEZE FRAME DATA HAS BEEN RECORDED** • Has the FREEZE FRAME DATA been recorded?	Yes	Go to the next step.
		No	Record the FREEZE FRAME DATA on the repair order, then go to the next step.
2	**VERIFY RELATED REPAIR INFORMATION AVAILABILITY** • Verify related Service Bulletins and/or on-line repair information availability. • Is any related repair information available?	Yes	Perform repair or diagnosis according to the available repair information. • If the vehicle is not repaired, go to the next step.
		No	Go to the next step.
3	**INSPECT TERMINAL COUPLE COMPONENT FOR POOR CONNECTION** • Turn the ignition switch to the LOCK position. • Remove the TCM. (See 05–17B–25 TCM REMOVAL/ INSTALLATION [AW6A-EL].) • Inspect for poor connection (such as damaged/ pulled-out pins, corrosion). • Are terminals normal?	Yes	Go to the next step.
		No	Replace the couple component, then go to Step 7.
4	**INSPECT RESISTANCE OF SHIFT SOLENOID B CIRCUIT** • Inspect for resistance between couple component terminal B2 (wiring harness-side) and ground. • Is resistance **within 11—15 ohms**? (See 05–17B–20 SOLENOID VALVE INSPECTION [AW6A-EL].)	Yes	Go to go to Step 7.
		No	Go to the next step.
5	**INSPECT TERMINAL SHIFT SOLENOID B FOR POOR CONNECTION** • Disconnect the shift solenoid B connector. • Inspect for poor connection (such as damaged/ pulled-out pins, corrosion). • Are terminals normal?	Yes	Go to the next step.
		No	Replace the couple component, then go to Step 7.
6	**INSPECT TERMINAL COUPLE COMPONENT CIRCUIT FOR SHORT TO GROUND** • Inspect for continuity between couple component terminal B2 and all terminals except B2 (wiring harness-side). • Is there continuity?	Yes	Repair or replace the couple component, then go to the next step.
		No	Replace the control valve body, then go to the next step. (See 05–17B–39 CONTROL VALVE BODY REMOVAL/ INSTALLATION [AW6A-EL].)
7	**VERIFY TROUBLESHOOTING OF DTC P0976 COMPLETED** • Make sure to reconnect all the disconnected connectors. • Clear the DTC from the memory using the WDS or equivalent. • Drive the vehicle in D range and make sure that gears shift smoothly from 1GR to 6GR. • Is same DTC present?	Yes	Replace the TCM, then go to the next step. (See 05–17B–25 TCM REMOVAL/INSTALLATION [AW6A-EL].)
		No	Go to the next step.
8	**VERIFY AFTER REPAIR PROCEDURE** • Perform the "After Repair Procedure". (See 05–02B–4 AFTER REPAIR PROCEDURE [AW6A-EL].) • Are any DTCs present?	Yes	Go to the applicable DTC inspection. (See 05–02B–5 DTC TABLE [AW6A-EL].)
		No	Troubleshooting completed.

DTC P0977 [AW6A-EL]

E6U050200000W37

DTC P0977	Shift solenoid B circuit malfunction (short to power/open circuit)
DETECTION CONDITION	• Open or short circuit in shift solenoid B signal system (The solenoid remains on continuously for **100 ms or more** even if the TCM sends a solenoid off command). **Diagnostic support note:** • The MIL illuminates if the TCM detects the above malfunction condition during first drive cycle. • A PENDING CODE is not available. • FREEZE FRAME DATA is available. • The AT warning light illuminates. • The DTC is stored in the TCM memory.
POSSIBLE CAUSE	• Open circuit in wiring harness between shift solenoid B terminal A and TCM terminal B2 • Short to power in wiring harness between shift solenoid B terminal A and TCM terminal B2 • Shift solenoid B malfunction • Damaged connector between shift solenoid A and TCM • TCM malfunction

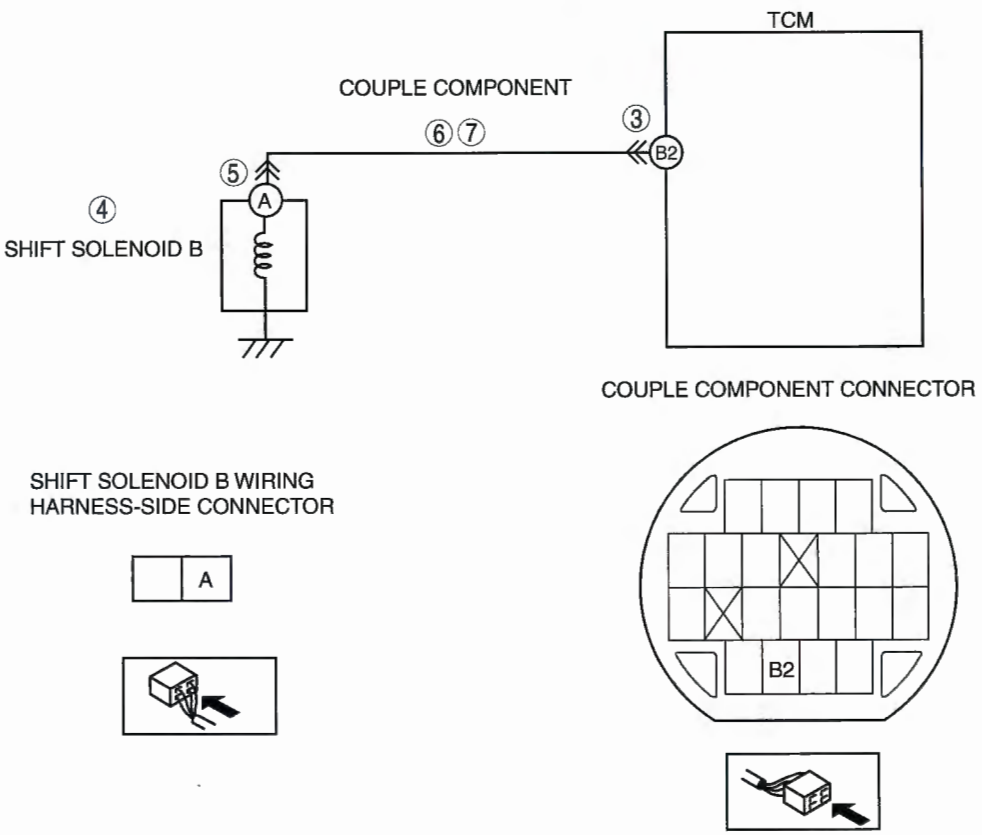

Diagnostic procedure

STEP	INSPECTION		ACTION
1	**VERIFY FREEZE FRAME DATA HAS BEEN RECORDED** • Has the FREEZE FRAME DATA been recorded?	Yes	Go to the next step.
		No	Record the FREEZE FRAME DATA on the repair order, then go to the next step.
2	**VERIFY RELATED REPAIR INFORMATION AVAILABILITY** • Verify related Service Bulletins and/or on-line repair information availability. • Is any related repair information available?	Yes	Perform repair or diagnosis according to the available repair information. • If the vehicle is not repaired, go to the next step.
		No	Go to the next step.
3	**INSPECT TERMINAL COUPLE COMPONENT FOR POOR CONNECTION** • Turn the ignition switch to the LOCK position. • Remove the TCM. (See 05–17B–25 TCM REMOVAL/ INSTALLATION [AW6A-EL].) • Inspect for poor connection (such as damaged/ pulled-out pins, corrosion). • Are terminals normal?	Yes	Go to the next step.
		No	Replace the couple component, then go to Step 8.
4	**INSPECT RESISTANCE OF SHIFT SOLENOID B CIRCUIT** • Inspect for resistance between couple component terminal B2 (wiring harness-side) and ground. • Is resistance **within 11—15 ohms**? (See 05–17B–20 SOLENOID VALVE INSPECTION [AW6A-EL].)	Yes	Go to go to Step 8.
		No	Go to the next step.
5	**INSPECT TERMINAL SHIFT SOLENOID B FOR POOR CONNECTION** • Disconnect the shift solenoid B connector. • Inspect for poor connection (such as damaged/ pulled-out pins, corrosion). • Are terminals normal?	Yes	Go to the next step.
		No	Replace the couple component, then go to Step 8.
6	**INSPECT TERMINAL COUPLE COMPONENT CIRCUIT FOR OPEN CIRCUIT** • Inspect for continuity between couple component terminal B2 (wiring harness-side) and shift solenoid A terminal A wiring harness-side). • Is there continuity?	Yes	Go to the next step.
		No	Repair or replace the couple component, then go to Step 8.
7	**INSPECT TERMINAL COUPLE COMPONENT CIRCUIT FOR SHORT TO POWER** • Inspect for continuity between couple component terminal B2 and all terminals except B2 (wiring harness-side). • Is there continuity?	Yes	Repair or replace the couple component, then go to the next step.
		No	Replace the control valve body, then go to the next step. (See 05–17B–39 CONTROL VALVE BODY REMOVAL/ INSTALLATION [AW6A-EL].)
8	**VERIFY TROUBLESHOOTING OF DTC P0977 COMPLETED** • Make sure to reconnect all the disconnected connectors. • Clear the DTC from the memory using the WDS or equivalent. • Drive the vehicle in D range and make sure that gears shift smoothly from 1GR to 6GR. • Is same DTC present?	Yes	Replace the TCM, then go to the next step. (See 05–17B–25 TCM REMOVAL/INSTALLATION [AW6A-EL].)
		No	Go to the next step.
9	**VERIFY AFTER REPAIR PROCEDURE** • Perform the "After Repair Procedure". (See 05–02B–4 AFTER REPAIR PROCEDURE [AW6A-EL].) • Are any DTCs present?	Yes	Go to the applicable DTC inspection. (See 05–02B–5 DTC TABLE [AW6A-EL].)
		No	Troubleshooting completed.

DTC P0978 [AW6A-EL]

E6U050200000W38

DTC P0978	Shift solenoid C range/performance (stuck)
DETECTION CONDITION	• Feedback current corresponding to solenoid current command value is irregular when engine is running. **Diagnostic support note:** • This is a continuous monitor (CCM). • The MIL illuminates if the TCM detects the above malfunction condition during the first drive cycle. • A PENDING CODE is not available. • FREEZE FRAME DATA is available. • The AT warning light illuminates. • The DTC is stored in the TCM memory.
POSSIBLE CAUSE	• ATF level low • Deteriorated ATF • Shift solenoid C stuck • Control valve stuck • TCM malfunction

Diagnostic procedure

STEP	INSPECTION		ACTION
1	**VERIFY FREEZE FRAME DATA HAS BEEN RECORDED** • Has the FREEZE FRAME DATA been recorded?	Yes	Go to the next step.
		No	Record the FREEZE FRAME DATA on the repair order, then go to the next step.
2	**VERIFY RELATED REPAIR INFORMATION AVAILABILITY** • Verify related Service Bulletins and/or on-line repair information availability. • Is any related repair information available?	Yes	Perform repair or diagnosis according to the available repair information. • If the vehicle is not repaired, go to the next step.
		No	Go to the next step.
3	**INSPECT ATF CONDITION** • Turn the ignition switch to the LOCK position. • Inspect the ATF condition. — Clear red: Normal — Light red (pink): Water mixed in fluid — Reddish brown: Deteriorated ATF • Is it normal? (See 05–17B–11 Automatic Transaxle Fluid (ATF) Condition Inspection.)	Yes	Go to the next step.
		No	If the ATF color is light red or reddish brown, replace ATF, then go to Step 6. (See 05–17B–12 AUTOMATIC TRANSAXLE FLUID (ATF) REPLACEMENT [AW6A-EL].)
4	**INSPECT ATF LEVEL** • Start the engine. • Warm up the ATX. • Is the ATF level within the specification? (See 05–17B–12 Automatic Transaxle Fluid (ATF) Level Inspection.)	Yes	Go to the next step.
		No	Add ATF to the specified level, then go to Step 6. (See 05–17B–12 Automatic Transaxle Fluid (ATF) Level Inspection.)
5	**INSPECT LINE PRESSURE** • Start the engine. • Measure the line pressures. (See 05–17B–4 Line Pressure Test.) • Are the line pressures within the specifications?	Yes	Go to the next step.
		No	• All ranges: Replace the oil pump or control valve body, then go to the next step. • Any ranges: Replace the ATX, then go the next step. (See 05–17B–30 AUTOMATIC TRANSAXLE REMOVAL/INSTALLATION [AW6A-EL].)
6	**VERIFY TROUBLESHOOTING OF DTC P0978 COMPLETED** • Make sure to reconnect all the disconnected connectors. • Clear the DTC from the memory using the WDS or equivalent. • Drive the vehicle in D range and make sure that gears shift smoothly from 1GR to 6GR. • Is same DTC present?	Yes	Replace the TCM, then go to the next step. (See 05–17B–25 TCM REMOVAL/INSTALLATION [AW6A-EL].)
		No	Go to the next step.
7	**VERIFY AFTER REPAIR PROCEDURE** • Perform the "After Repair Procedure". (See 05–02B–4 AFTER REPAIR PROCEDURE [AW6A-EL].) • Are any DTCs present?	Yes	Go to the applicable DTC inspection. (See 05–02B–5 DTC TABLE [AW6A-EL].)
		No	Troubleshooting completed.

DTC P0979 [AW6A-EL]

E6U050200000W39

DTC P0979	Shift solenoid C circuit malfunction (short to ground/open circuit)
DETECTION CONDITION	• Open or short circuit in shift solenoid C signal system (The solenoid circuit current value input to the TCM is continuously **less than 23 mA** for **100 ms or more**). **Diagnostic support note:** • This is a continuous monitor (CCM). • The MIL illuminates if the TCM detects the above malfunction condition during the first drive cycle. • A PENDING CODE is not available. • FREEZE FRAME DATA is available. • The AT warning light illuminates. • The DTC is stored in the TCM memory.
POSSIBLE CAUSE	• Open circuit between shift solenoid C terminal B and TCM terminal B11 • Open circuit between shift solenoid C terminal A and TCM terminal B10 • Short to ground in wiring harness between shift solenoid C terminal B and TCM terminal B11 • Short to ground in wiring harness between shift solenoid C terminal A and TCM terminal B10 • Shift solenoid C malfunction • Damaged connector between line pressure control solenoid and TCM • TCM malfunction

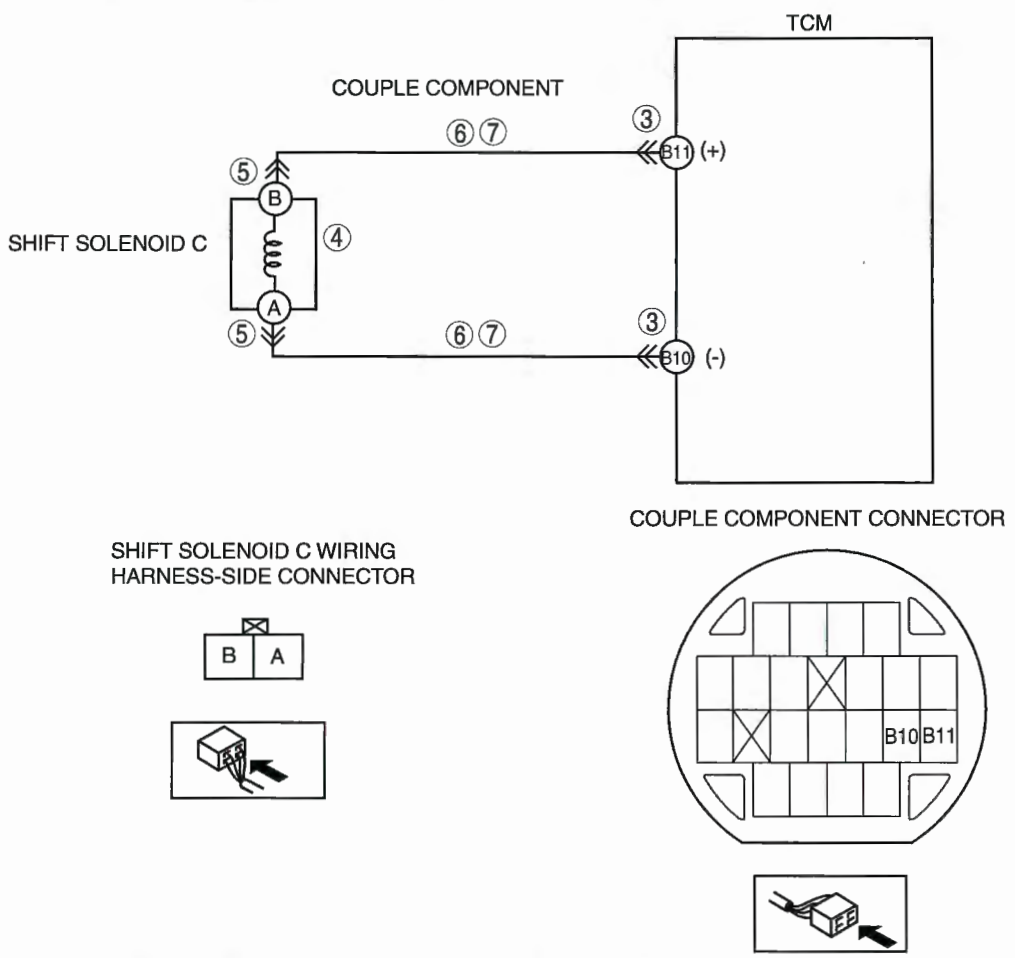

Diagnostic procedure

STEP	INSPECTION		ACTION
1	**VERIFY FREEZE FRAME DATA HAS BEEN RECORDED** • Has the FREEZE FRAME DATA been recorded?	Yes	Go to the next step.
		No	Record the FREEZE FRAME DATA on the repair order, then go to the next step.
2	**VERIFY RELATED REPAIR INFORMATION AVAILABILITY** • Verify related Service Bulletins and/or on-line repair information availability. • Is any related repair information available?	Yes	Perform repair or diagnosis according to the available repair information. • If the vehicle is not repaired, go to the next step.
		No	Go to the next step.
3	**INSPECT TERMINAL COUPLE COMPONENT FOR POOR CONNECTION** • Turn the ignition switch to the LOCK position. • Remove the TCM. (See 05–17B–25 TCM REMOVAL/ INSTALLATION [AW6A-EL].) • Inspect for poor connection (such as damaged/ pulled-out pins, corrosion). • Are terminals normal?	Yes	Go to the next step.
		No	Replace the couple component, then go to Step 8.
4	**INSPECT RESISTANCE OF SHIFT SOLENOID C CIRCUIT** • Inspect for resistance between couple component terminals B11 and B10 (wiring harness-side). • Is resistance **within 5.0—5.6 ohms**? (See 05–17B–20 SOLENOID VALVE INSPECTION [AW6A-EL].)	Yes	Go to go to Step 8.
		No	Go to the next step.
5	**INSPECT TERMINAL SHIFT SOLENOID C FOR POOR CONNECTION** • Disconnect the shift solenoid C connector. • Inspect for poor connection (such as damaged/ pulled-out pins, corrosion). • Are terminals normal?	Yes	Go to the next step.
		No	Replace the couple component, then go to Step 8.
6	**INSPECT TERMINAL COUPLE COMPONENT CIRCUIT FOR OPEN CIRCUIT** • Inspect for continuity between couple component terminals and line pressure control solenoid terminals (wiring harness-side). — Terminal B11 and terminal B — Terminal B10 and terminal A • Is there continuity?	Yes	Go to the next step.
		No	Repair or replace the couple component, then go to Step 8.
7	**INSPECT TERMINAL COUPLE COMPONENT CIRCUIT FOR SHORT TO GROUND** • Inspect for continuity between couple component terminals (wiring harness-side). — Terminal B11 and all terminals except B11/ B10 — Terminal B10 and all terminals except B11/ B10 • Is there continuity?	Yes	Repair or replace the couple component, then go to the next step.
		No	Replace the control valve body, then go to the next step. (See 05–17B–39 CONTROL VALVE BODY REMOVAL/ INSTALLATION [AW6A-EL].)
8	**VERIFY TROUBLESHOOTING OF DTC P0979 COMPLETED** • Make sure to reconnect all the disconnected connectors. • Clear the DTC from the memory using the WDS or equivalent. • Drive the vehicle in D range and make sure that gears shift smoothly from 1GR to 6GR. • Is same DTC present?	Yes	Replace the TCM, then go to the next step. (See 05–17B–25 TCM REMOVAL/INSTALLATION [AW6A-EL].)
		No	Go to the next step.
9	**VERIFY AFTER REPAIR PROCEDURE** • Perform the "After Repair Procedure". (See 05–02B–4 AFTER REPAIR PROCEDURE [AW6A-EL].) • Are any DTCs present?	Yes	Go to the applicable DTC inspection. (See 05–02B–5 DTC TABLE [AW6A-EL].)
		No	Troubleshooting completed.

DTC P0980 [AW6A-EL]

E6U050200000W40

DTC P0980	Shift solenoid C circuit malfunction (short to power)
DETECTION CONDITION	• Short circuit in shift solenoid C signal system (The solenoid circuit current value input to the TCM is continuously **more than 1,333 mA** for **100 ms or more**). **Diagnostic support note:** • This is a continuous monitor (CCM). • The MIL illuminates if the TCM detects the above malfunction condition during the first drive cycle. • A PENDING CODE is not available. • FREEZE FRAME DATA is available. • The AT warning light illuminates. • The DTC is stored in the TCM memory.
POSSIBLE CAUSE	• Short to power in wiring harness between shift solenoid C terminal B and TCM terminal B11 • Short to power in wiring harness between shift solenoid C terminal A and TCM terminal B10 • Shift solenoid C malfunction • Damaged connector between line pressure control solenoid and TCM • TCM malfunction

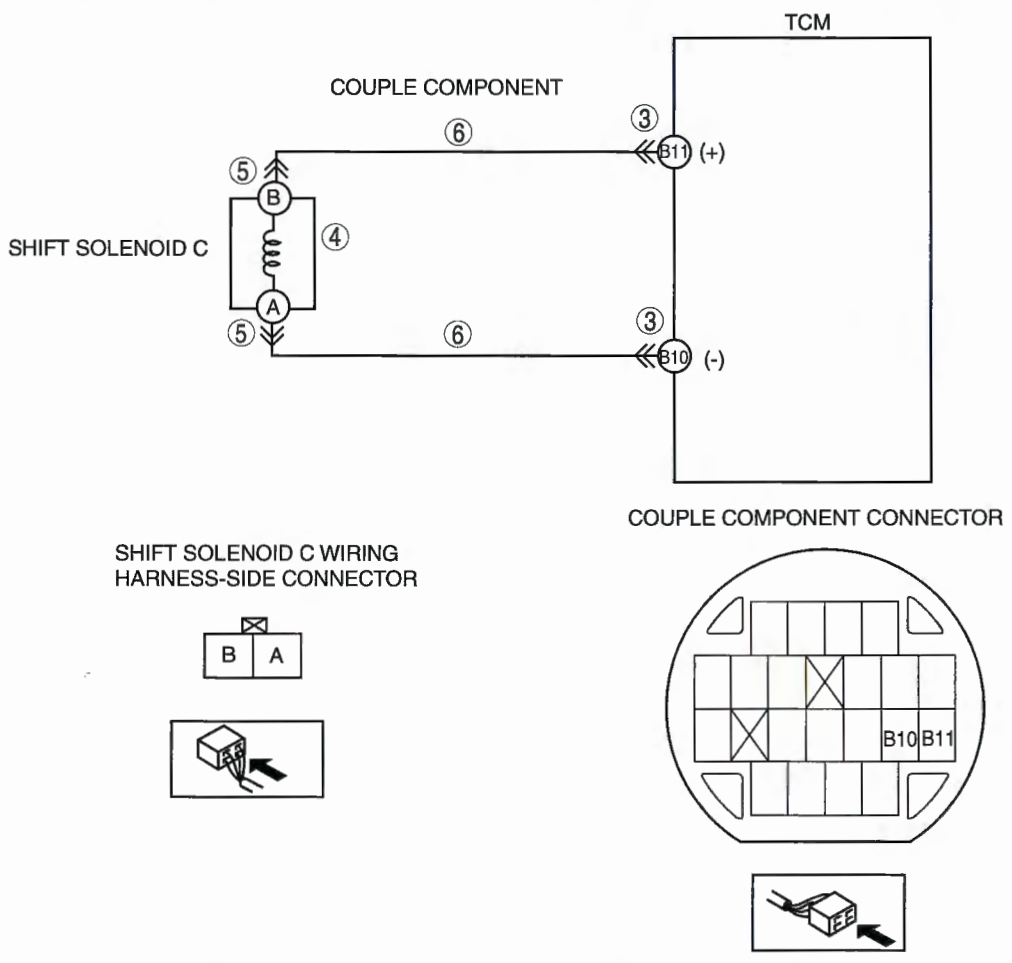

Diagnostic procedure

STEP	INSPECTION		ACTION
1	**VERIFY FREEZE FRAME DATA HAS BEEN RECORDED** • Has the FREEZE FRAME DATA been recorded?	Yes	Go to the next step.
		No	Record the FREEZE FRAME DATA on the repair order, then go to the next step.
2	**VERIFY RELATED REPAIR INFORMATION AVAILABILITY** • Verify related Service Bulletins and/or on-line repair information availability. • Is any related repair information available?	Yes	Perform repair or diagnosis according to the available repair information. • If the vehicle is not repaired, go to the next step.
		No	Go to the next step.
3	**INSPECT TERMINAL COUPLE COMPONENT FOR POOR CONNECTION** • Turn the ignition switch to the LOCK position. • Remove the TCM. (See 05–17B–25 TCM REMOVAL/ INSTALLATION [AW6A-EL].) • Inspect for poor connection (such as damaged/ pulled-out pins, corrosion). • Are terminals normal?	Yes	Go to the next step.
		No	Replace the couple component, then go to Step 7.
4	**INSPECT RESISTANCE OF SHIFT SOLENOID C CIRCUIT** • Inspect for resistance between couple component terminals B11 and B10 (wiring harness-side). • Is resistance **within 5.0—5.6 ohms**? (See 05–17B–20 SOLENOID VALVE INSPECTION [AW6A-EL].)	Yes	Go to go to Step 7.
		No	Go to the next step.
5	**INSPECT TERMINAL SHIFT SOLENOID C FOR POOR CONNECTION** • Disconnect the shift solenoid C connector. • Inspect for poor connection (such as damaged/ pulled-out pins, corrosion). • Are terminals normal?	Yes	Go to the next step.
		No	Replace the couple component, then go to Step 7.
6	**INSPECT TERMINAL COUPLE COMPONENT CIRCUIT FOR SHORT TO POWER** • Inspect for continuity between couple component terminals (wiring harness-side). — Terminal B11 and all terminals except B11/ B10 — Terminal B10 and all terminals except B11/ B10 • Is there continuity?	Yes	Repair or replace the couple component, then go to the next step.
		No	Replace the control valve body, then go to the next step. (See 05–17B–39 CONTROL VALVE BODY REMOVAL/ INSTALLATION [AW6A-EL].)
7	**VERIFY TROUBLESHOOTING OF DTC P0980 COMPLETED** • Make sure to reconnect all the disconnected connectors. • Clear the DTC from the memory using the WDS or equivalent. • Drive the vehicle in D range and make sure that gears shift smoothly from 1GR to 6GR. • Is same DTC present?	Yes	Replace the TCM, then go to the next step. (See 05–17B–25 TCM REMOVAL/INSTALLATION [AW6A-EL].)
		No	Go to the next step.
8	**VERIFY AFTER REPAIR PROCEDURE** • Perform the "After Repair Procedure". (See 05–02B–4 AFTER REPAIR PROCEDURE [AW6A-EL].) • Are any DTCs present?	Yes	Go to the applicable DTC inspection. (See 05–02B–5 DTC TABLE [AW6A-EL].)
		No	Troubleshooting completed.

DTC P0981 [AW6A-EL]

E6U050200000W41

DTC P0981	Shift solenoid D range/performance (stuck)
DETECTION CONDITION	• Feedback current corresponding to solenoid current command value is irregular when engine is running. **Diagnostic support note:** • This is a continuous monitor (CCM). • The MIL illuminates if the TCM detects the above malfunction condition during the first drive cycle. • A PENDING CODE is not available. • FREEZE FRAME DATA is available. • The AT warning light illuminates. • The DTC is stored in the TCM memory.
POSSIBLE CAUSE	• ATF level low • Deteriorated ATF • Shift solenoid D stuck • Control valve stuck • TCM malfunction

Diagnostic procedure

STEP	INSPECTION		ACTION
1	**VERIFY FREEZE FRAME DATA HAS BEEN RECORDED** • Has the FREEZE FRAME DATA been recorded?	Yes	Go to the next step.
		No	Record the FREEZE FRAME DATA on the repair order, then go to the next step.
2	**VERIFY RELATED REPAIR INFORMATION AVAILABILITY** • Verify related Service Bulletins and/or on-line repair information availability. • Is any related repair information available?	Yes	Perform repair or diagnosis according to the available repair information. • If the vehicle is not repaired, go to the next step.
		No	Go to the next step.
3	**INSPECT ATF CONDITION** • Turn the ignition switch to the LOCK position. • Inspect the ATF condition. — Clear red: Normal — Light red (pink): Water mixed in fluid — Reddish brown: Deteriorated ATF • Is it normal? (See 05–17B–11 Automatic Transaxle Fluid (ATF) Condition Inspection.)	Yes	Go to the next step.
		No	If the ATF color is light red or reddish brown, replace ATF, then go to Step 6. (See 05–17B–12 AUTOMATIC TRANSAXLE FLUID (ATF) REPLACEMENT [AW6A-EL].)
4	**INSPECT ATF LEVEL** • Start the engine. • Warm up the ATX. • Is the ATF level within the specification? (See 05–17B–12 Automatic Transaxle Fluid (ATF) Level Inspection.)	Yes	Go to the next step.
		No	Add ATF to the specified level, then go to Step 6. (See 05–17B–12 Automatic Transaxle Fluid (ATF) Level Inspection.)
5	**INSPECT LINE PRESSURE** • Start the engine. • Measure the line pressures. (See 05–17B–4 Line Pressure Test.) • Are the line pressures within the specifications?	Yes	Go to the next step.
		No	• All ranges: Replace the oil pump or control valve body, then go to the next step. • Any ranges: Replace the ATX, then go the next step. (See 05–17B–30 AUTOMATIC TRANSAXLE REMOVAL/INSTALLATION [AW6A-EL].)
6	**VERIFY TROUBLESHOOTING OF DTC P0981 COMPLETED** • Make sure to reconnect all the disconnected connectors. • Clear the DTC from the memory using the WDS or equivalent. • Drive the vehicle in D range and make sure that gears shift smoothly from 1GR to 6GR. • Is same DTC present?	Yes	Replace the TCM, then go to the next step. (See 05–17B–25 TCM REMOVAL/INSTALLATION [AW6A-EL].)
		No	Go to the next step.
7	**VERIFY AFTER REPAIR PROCEDURE** • Perform the "After Repair Procedure". (See 05–02B–4 AFTER REPAIR PROCEDURE [AW6A-EL].) • Are any DTCs present?	Yes	Go to the applicable DTC inspection. (See 05–02B–5 DTC TABLE [AW6A-EL].)
		No	Troubleshooting completed.

DTC P0982 [AW6A-EL]

E6U050200000W42

DTC P0982	Shift solenoid D circuit malfunction (short to ground/open circuit)
DETECTION CONDITION	• Open or short circuit in shift solenoid D signal system (The solenoid circuit current value input to the TCM is continuously **less than 23 mA** for **100 ms or more**). **Diagnostic support note:** • This is a continuous monitor (CCM). • The MIL illuminates if the TCM detects the above malfunction condition during the first drive cycle. • A PENDING CODE is not available. • FREEZE FRAME DATA is available. • The AT warning light illuminates. • The DTC is stored in the TCM memory.
POSSIBLE CAUSE	• Open circuit between shift solenoid D terminal B and TCM terminal B17 • Open circuit between shift solenoid D terminal A and TCM terminal B18 • Short to ground in wiring harness between shift solenoid D terminal B and TCM terminal B17 • Short to ground in wiring harness between shift solenoid D terminal A and TCM terminal B18 • Shift solenoid D malfunction • Damaged connector between line pressure control solenoid and TCM • TCM malfunction

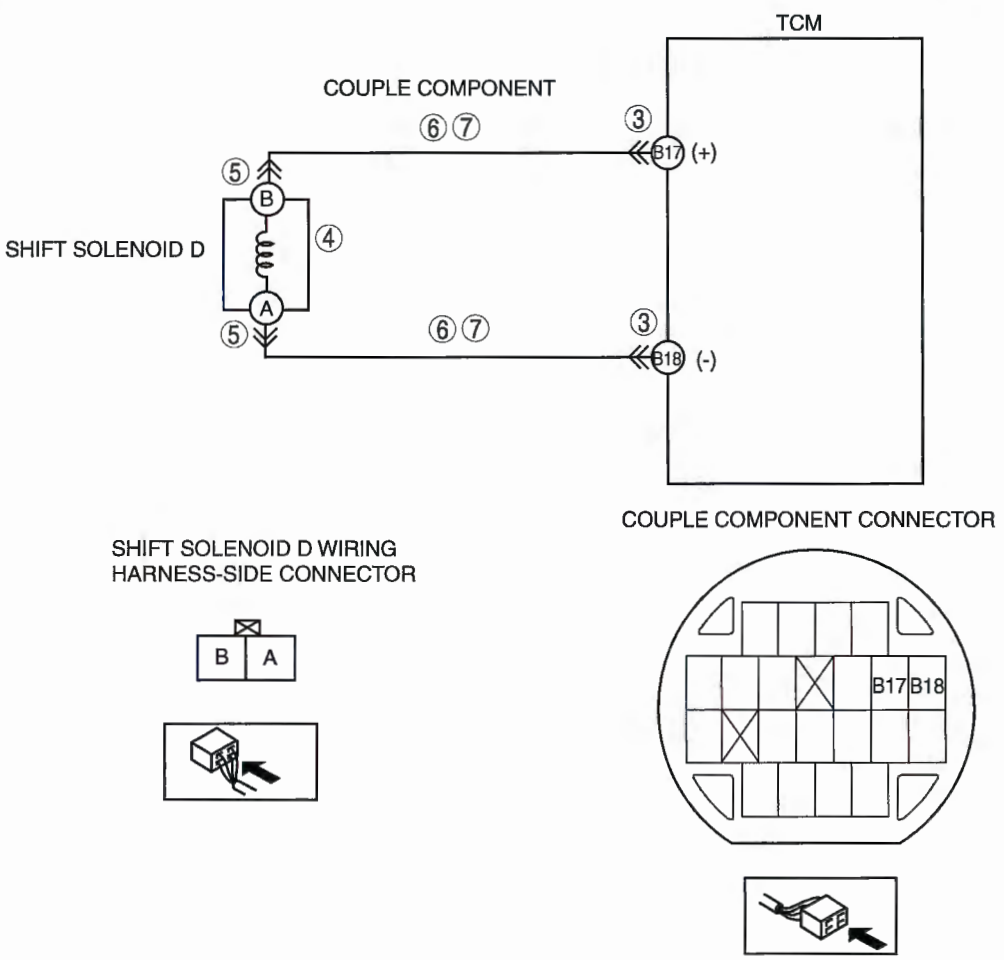

Diagnostic procedure

STEP	INSPECTION		ACTION
1	**VERIFY FREEZE FRAME DATA HAS BEEN RECORDED** • Has the FREEZE FRAME DATA been recorded?	Yes	Go to the next step.
		No	Record the FREEZE FRAME DATA on the repair order, then go to the next step.
2	**VERIFY RELATED REPAIR INFORMATION AVAILABILITY** • Verify related Service Bulletins and/or on-line repair information availability. • Is any related repair information available?	Yes	Perform repair or diagnosis according to the available repair information. • If the vehicle is not repaired, go to the next step.
		No	Go to the next step.
3	**INSPECT TERMINAL COUPLE COMPONENT FOR POOR CONNECTION** • Turn the ignition switch to the LOCK position. • Remove the TCM. (See 05–17B–25 TCM REMOVAL/ INSTALLATION [AW6A-EL].) • Inspect for poor connection (such as damaged/ pulled-out pins, corrosion). • Are terminals normal?	Yes	Go to the next step.
		No	Replace the couple component, then go to Step 8.
4	**INSPECT RESISTANCE OF SHIFT SOLENOID D CIRCUIT** • Inspect for resistance between couple component terminals B17 and B18 (wiring harness-side). • Is resistance **within 5.0—5.6 ohms**? (See 05–17B–20 SOLENOID VALVE INSPECTION [AW6A-EL].)	Yes	Go to go to Step 8.
		No	Go to the next step.
5	**INSPECT TERMINAL SHIFT SOLENOID D FOR POOR CONNECTION** • Disconnect the shift solenoid D connector. • Inspect for poor connection (such as damaged/ pulled-out pins, corrosion). • Are terminals normal?	Yes	Go to the next step.
		No	Replace the couple component, then go to Step 8.
6	**INSPECT TERMINAL COUPLE COMPONENT CIRCUIT FOR OPEN CIRCUIT** • Inspect for continuity between couple component terminals and line pressure control solenoid terminals (wiring harness-side). — Terminal B17 and terminal B — Terminal B18 and terminal A • Is there continuity?	Yes	Go to the next step.
		No	Repair or replace the couple component, then go to Step 8.
7	**INSPECT TERMINAL COUPLE COMPONENT CIRCUIT FOR SHORT TO GROUND** • Inspect for continuity between couple component terminals (wiring harness-side). — Terminal B17 and all terminals except B17/ B18 — Terminal B18 and all terminals except B17/ B18 • Is there continuity?	Yes	Repair or replace the couple component, then go to the next step.
		No	Replace the control valve body, then go to the next step. (See 05–17B–39 CONTROL VALVE BODY REMOVAL/ INSTALLATION [AW6A-EL].)
8	**VERIFY TROUBLESHOOTING OF DTC P0982 COMPLETED** • Make sure to reconnect all the disconnected connectors. • Clear the DTC from the memory using the WDS or equivalent. • Drive the vehicle in D range and make sure that gears shift smoothly from 1GR to 6GR. • Is same DTC present?	Yes	Replace the TCM, then go to the next step. (See 05–17B–25 TCM REMOVAL/INSTALLATION [AW6A-EL].)
		No	Go to the next step.
9	**VERIFY AFTER REPAIR PROCEDURE** • Perform the "After Repair Procedure". (See 05–02B–4 AFTER REPAIR PROCEDURE [AW6A-EL].) • Are any DTCs present?	Yes	Go to the applicable DTC inspection. (See 05–02B–5 DTC TABLE [AW6A-EL].)
		No	Troubleshooting completed.

DTC P0983 [AW6A-EL]

E6U050200000W43

DTC P0983	Shift solenoid D circuit malfunction (short to power)
DETECTION CONDITION	• Short circuit in shift solenoid D signal system (The solenoid circuit current value input to the TCM is continuously **more than 1,333 mA** for **100 ms or more**). **Diagnostic support note:** • This is a continuous monitor (CCM). • The MIL illuminates if the TCM detects the above malfunction condition during the first drive cycle. • A PENDING CODE is not available. • FREEZE FRAME DATA is available. • The AT warning light illuminates. • The DTC is stored in the TCM memory.
POSSIBLE CAUSE	• Short to power in wiring harness between shift solenoid D terminal B and TCM terminal B17 • Short to power in wiring harness between shift solenoid D terminal A and TCM terminal B18 • Shift solenoid D malfunction • Damaged connector between line pressure control solenoid and TCM • TCM malfunction

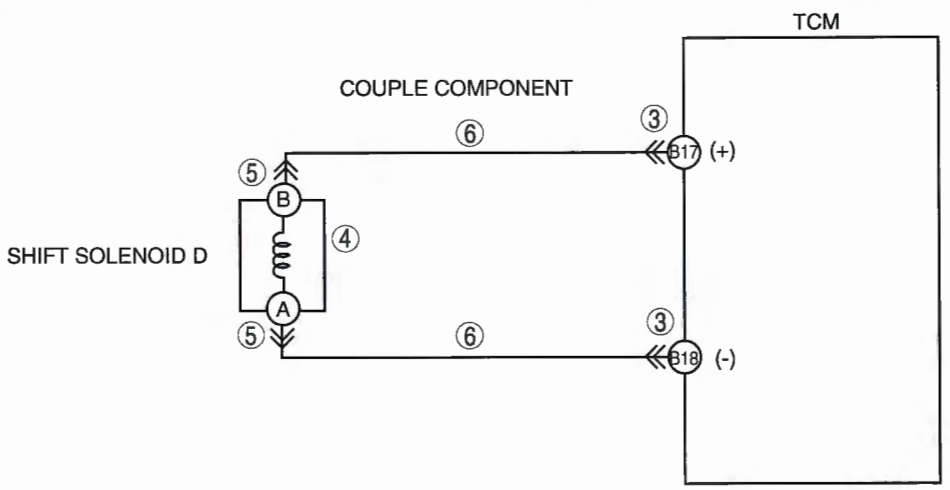

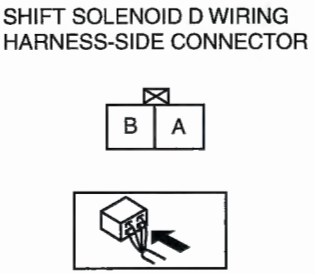

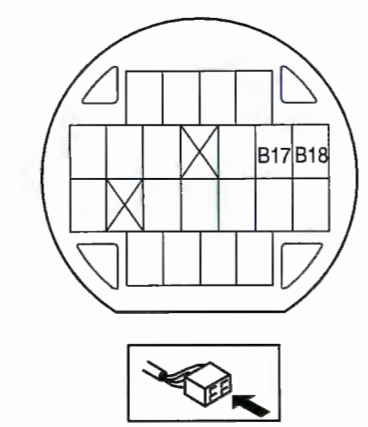

Diagnostic procedure

STEP	INSPECTION		ACTION
1	**VERIFY FREEZE FRAME DATA HAS BEEN RECORDED** • Has the FREEZE FRAME DATA been recorded?	Yes	Go to the next step.
		No	Record the FREEZE FRAME DATA on the repair order, then go to the next step.
2	**VERIFY RELATED REPAIR INFORMATION AVAILABILITY** • Verify related Service Bulletins and/or on-line repair information availability. • Is any related repair information available?	Yes	Perform repair or diagnosis according to the available repair information. • If the vehicle is not repaired, go to the next step.
		No	Go to the next step.
3	**INSPECT TERMINAL COUPLE COMPONENT FOR POOR CONNECTION** • Turn the ignition switch to the LOCK position. • Remove the TCM. (See 05–17B–25 TCM REMOVAL/ INSTALLATION [AW6A-EL].) • Inspect for poor connection (such as damaged/ pulled-out pins, corrosion). • Are terminals normal?	Yes	Go to the next step.
		No	Replace the couple component, then go to Step 7.
4	**INSPECT RESISTANCE OF SHIFT SOLENOID D CIRCUIT** • Inspect for resistance between couple component terminals B17 and B18 (wiring harness-side). • Is resistance **within 5.0—5.6 ohms**? (See 05–17B–20 SOLENOID VALVE INSPECTION [AW6A-EL].)	Yes	Go to go to Step 7.
		No	Go to the next step.
5	**INSPECT TERMINAL SHIFT SOLENOID D FOR POOR CONNECTION** • Disconnect the shift solenoid D connector. • Inspect for poor connection (such as damaged/ pulled-out pins, corrosion). • Are terminals normal?	Yes	Go to the next step.
		No	Replace the couple component, then go to Step 7.
6	**INSPECT TERMINAL COUPLE COMPONENT CIRCUIT FOR SHORT TO POWER** • Inspect for continuity between couple component terminals (wiring harness-side). — Terminal B17 and all terminals except B17/ B18 — Terminal B18 and all terminals except B17/ B18 • Is there continuity?	Yes	Repair or replace the couple component, then go to the next step.
		No	Replace the control valve body, then go to the next step. (See 05–17B–39 CONTROL VALVE BODY REMOVAL/ INSTALLATION [AW6A-EL].)
7	**VERIFY TROUBLESHOOTING OF DTC P0983 COMPLETED** • Make sure to reconnect all the disconnected connectors. • Clear the DTC from the memory using the WDS or equivalent. • Drive the vehicle in D range and make sure that gears shift smoothly from 1GR to 6GR. • Is same DTC present?	Yes	Replace the TCM, then go to the next step. (See 05–17B–25 TCM REMOVAL/INSTALLATION [AW6A-EL].)
		No	Go to the next step.
8	**VERIFY AFTER REPAIR PROCEDURE** • Perform the "After Repair Procedure". (See 05–02B–4 AFTER REPAIR PROCEDURE [AW6A-EL].) • Are any DTCs present?	Yes	Go to the applicable DTC inspection. (See 05–02B–5 DTC TABLE [AW6A-EL].)
		No	Troubleshooting completed.

DTC P0984 [AW6A-EL]

E6U050200000W44

DTC P0984	Shift solenoid E range/performance (stuck)
DETECTION CONDITION	• Feedback current corresponding to solenoid current command value is irregular when engine is running. **Diagnostic support note:** • This is a continuous monitor (CCM). • The MIL illuminates if the TCM detects the above malfunction condition during the first drive cycle. • A PENDING CODE is not available. • FREEZE FRAME DATA is available. • The AT warning light illuminates. • The DTC is stored in the TCM memory.
POSSIBLE CAUSE	• ATF level low • Deteriorated ATF • Shift solenoid E stuck • Control valve stuck • TCM malfunction

Diagnostic procedure

STEP	INSPECTION		ACTION
1	**VERIFY FREEZE FRAME DATA HAS BEEN RECORDED** • Has the FREEZE FRAME DATA been recorded?	Yes	Go to the next step.
		No	Record the FREEZE FRAME DATA on the repair order, then go to the next step.
2	**VERIFY RELATED REPAIR INFORMATION AVAILABILITY** • Verify related Service Bulletins and/or on-line repair information availability. • Is any related repair information available?	Yes	Perform repair or diagnosis according to the available repair information. • If the vehicle is not repaired, go to the next step.
		No	Go to the next step.
3	**INSPECT ATF CONDITION** • Turn the ignition switch to the LOCK position. • Inspect the ATF condition. — Clear red: Normal — Light red (pink): Water mixed in fluid — Reddish brown: Deteriorated ATF • Is it normal? (See 05–17B–11 Automatic Transaxle Fluid (ATF) Condition Inspection.)	Yes	Go to the next step.
		No	If the ATF color is light red or reddish brown, replace ATF, then go to Step 6. (See 05–17B–12 AUTOMATIC TRANSAXLE FLUID (ATF) REPLACEMENT [AW6A-EL].)
4	**INSPECT ATF LEVEL** • Start the engine. • Warm up the ATX. • Is the ATF level within the specification? (See 05–17B–12 Automatic Transaxle Fluid (ATF) Level Inspection.)	Yes	Go to the next step.
		No	Add ATF to the specified level, then go to Step 6. (See 05–17B–12 Automatic Transaxle Fluid (ATF) Level Inspection.)
5	**INSPECT LINE PRESSURE** • Start the engine. • Measure the line pressures. (See 05–17B–4 Line Pressure Test.) • Are the line pressures within the specifications?	Yes	Go to the next step.
		No	• All ranges: Replace the oil pump or control valve body, then go to the next step. • Any ranges: Replace the ATX, then go the next step. (See 05–17B–30 AUTOMATIC TRANSAXLE REMOVAL/INSTALLATION [AW6A-EL].)
6	**VERIFY TROUBLESHOOTING OF DTC P0984 COMPLETED** • Make sure to reconnect all the disconnected connectors. • Clear the DTC from the memory using the WDS or equivalent. • Drive the vehicle in D range and make sure that gears shift smoothly from 1GR to 6GR. • Is same DTC present?	Yes	Replace the TCM, then go to the next step. (See 05–17B–25 TCM REMOVAL/INSTALLATION [AW6A-EL].)
		No	Go to the next step.
7	**VERIFY AFTER REPAIR PROCEDURE** • Perform the "After Repair Procedure". (See 05–02B–4 AFTER REPAIR PROCEDURE [AW6A-EL].) • Are any DTCs present?	Yes	Go to the applicable DTC inspection. (See 05–02B–5 DTC TABLE [AW6A-EL].)
		No	Troubleshooting completed.

DTC P0985 [AW6A-EL]

E6U050200000W45

DTC P0985	Shift solenoid E circuit malfunction (short to ground/open circuit)
DETECTION CONDITION	• Open or short circuit in shift solenoid E signal system (The solenoid circuit current value input to the TCM is continuously **less than 23 mA** for **100 ms or more**). **Diagnostic support note:** • This is a continuous monitor (CCM). • The MIL illuminates if the TCM detects the above malfunction condition during the first drive cycle. • A PENDING CODE is not available. • FREEZE FRAME DATA is available. • The AT warning light illuminates. • The DTC is stored in the TCM memory.
POSSIBLE CAUSE	• Open circuit between shift solenoid E terminal B and TCM terminal B14 • Open circuit between shift solenoid E terminal A and TCM terminal B22 • Short to ground in wiring harness between shift solenoid E terminal B and TCM terminal B14 • Short to ground in wiring harness between shift solenoid E terminal A and TCM terminal B22 • Shift solenoid E malfunction • Damaged connector between line pressure control solenoid and TCM • TCM malfunction

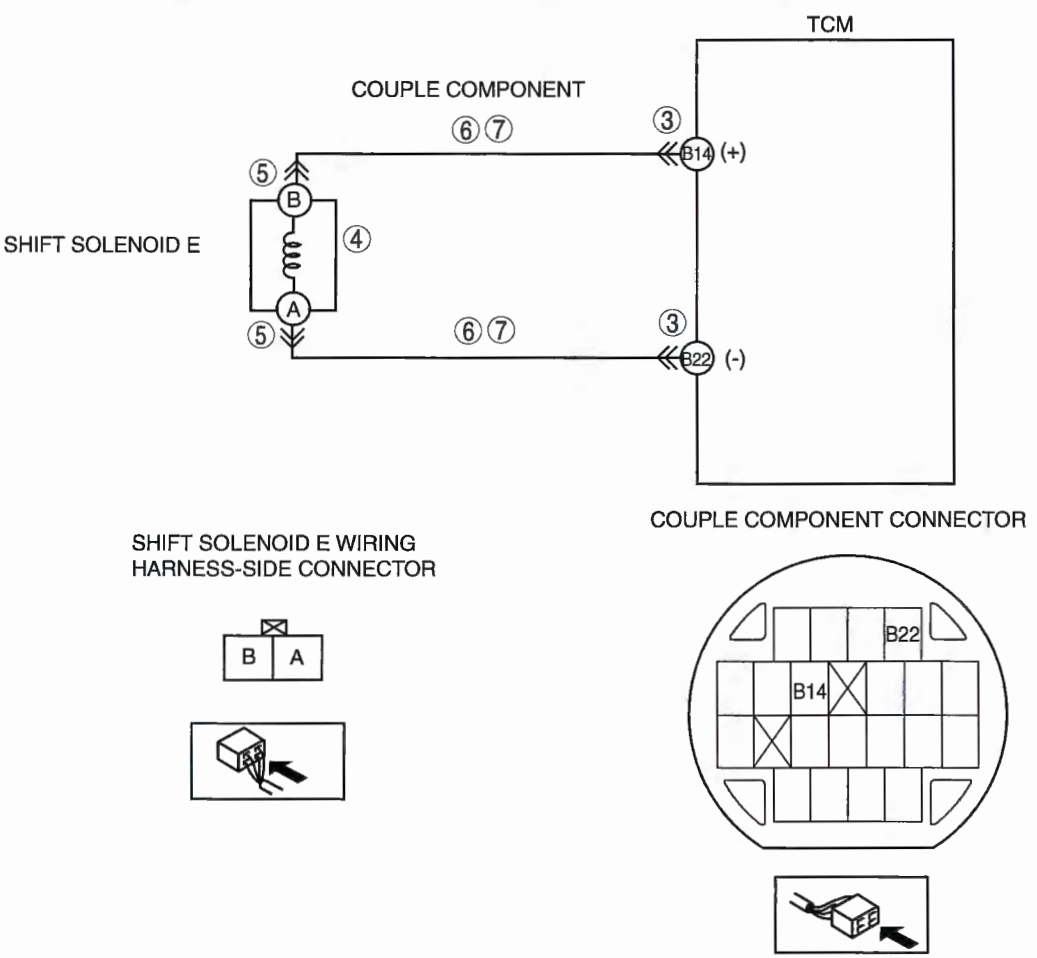

Diagnostic procedure

STEP	INSPECTION		ACTION
1	**VERIFY FREEZE FRAME DATA HAS BEEN RECORDED** • Has the FREEZE FRAME DATA been recorded?	Yes	Go to the next step.
		No	Record the FREEZE FRAME DATA on the repair order, then go to the next step.
2	**VERIFY RELATED REPAIR INFORMATION AVAILABILITY** • Verify related Service Bulletins and/or on-line repair information availability. • Is any related repair information available?	Yes	Perform repair or diagnosis according to the available repair information. • If the vehicle is not repaired, go to the next step.
		No	Go to the next step.
3	**INSPECT TERMINAL COUPLE COMPONENT FOR POOR CONNECTION** • Turn the ignition switch to the LOCK position. • Remove the TCM. (See 05–17B–25 TCM REMOVAL/ INSTALLATION [AW6A-EL].) • Inspect for poor connection (such as damaged/ pulled-out pins, corrosion). • Are terminals normal?	Yes	Go to the next step.
		No	Replace the couple component, then go to Step 8.
4	**INSPECT RESISTANCE OF SHIFT SOLENOID E CIRCUIT** • Inspect for resistance between couple component terminals B14 and B22 (wiring harness-side). • Is resistance **within 5.0—5.6 ohms**? (See 05–17B–20 SOLENOID VALVE INSPECTION [AW6A-EL].)	Yes	Go to go to Step 8.
		No	Go to the next step.
5	**INSPECT TERMINAL SHIFT SOLENOID E FOR POOR CONNECTION** • Disconnect the shift solenoid E connector. • Inspect for poor connection (such as damaged/ pulled-out pins, corrosion). • Are terminals normal?	Yes	Go to the next step.
		No	Replace the couple component, then go to Step 8.
6	**INSPECT TERMINAL COUPLE COMPONENT CIRCUIT FOR OPEN CIRCUIT** • Inspect for continuity between couple component terminals and line pressure control solenoid terminals (wiring harness-side). — Terminal B14 and terminal B — Terminal B22 and terminal A • Is there continuity?	Yes	Go to the next step.
		No	Repair or replace the couple component, then go to Step 8.
7	**INSPECT TERMINAL COUPLE COMPONENT CIRCUIT FOR SHORT TO GROUND** • Inspect for continuity between couple component terminals (wiring harness-side). — Terminal B14 and all terminals except B14/ B22 — Terminal B22 and all terminals except B14/ B22 • Is there continuity?	Yes	Repair or replace the couple component, then go to the next step.
		No	Replace the control valve body, then go to the next step. (See 05–17B–39 CONTROL VALVE BODY REMOVAL/ INSTALLATION [AW6A-EL].)
8	**VERIFY TROUBLESHOOTING OF DTC P0985 COMPLETED** • Make sure to reconnect all the disconnected connectors. • Clear the DTC from the memory using the WDS or equivalent. • Drive the vehicle in D range and make sure that gears shift smoothly from 1GR to 6GR. • Is same DTC present?	Yes	Replace the TCM, then go to the next step. (See 05–17B–25 TCM REMOVAL/INSTALLATION [AW6A-EL].)
		No	Go to the next step.
9	**VERIFY AFTER REPAIR PROCEDURE** • Perform the "After Repair Procedure". (See 05–02B–4 AFTER REPAIR PROCEDURE [AW6A-EL].) • Are any DTCs present?	Yes	Go to the applicable DTC inspection. (See 05–02B–5 DTC TABLE [AW6A-EL].)
		No	Troubleshooting completed.

DTC P0986 [AW6A-EL]

E6U050200000W46

DTC P0986	Shift solenoid E circuit malfunction (short to power)
DETECTION CONDITION	• Short circuit in shift solenoid E signal system (The solenoid circuit current value input to the TCM is continuously **more than 1,333 mA** for **100 ms or more**). **Diagnostic support note:** • This is a continuous monitor (CCM). • The MIL illuminates if the TCM detects the above malfunction condition during the first drive cycle. • A PENDING CODE is not available. • FREEZE FRAME DATA is available. • The AT warning light illuminates. • The DTC is stored in the TCM memory.
POSSIBLE CAUSE	• Short to power in wiring harness between shift solenoid E terminal B and TCM terminal B14 • Short to power in wiring harness between shift solenoid E terminal A and TCM terminal B22 • Shift solenoid E malfunction • Damaged connector between line pressure control solenoid and TCM • TCM malfunction

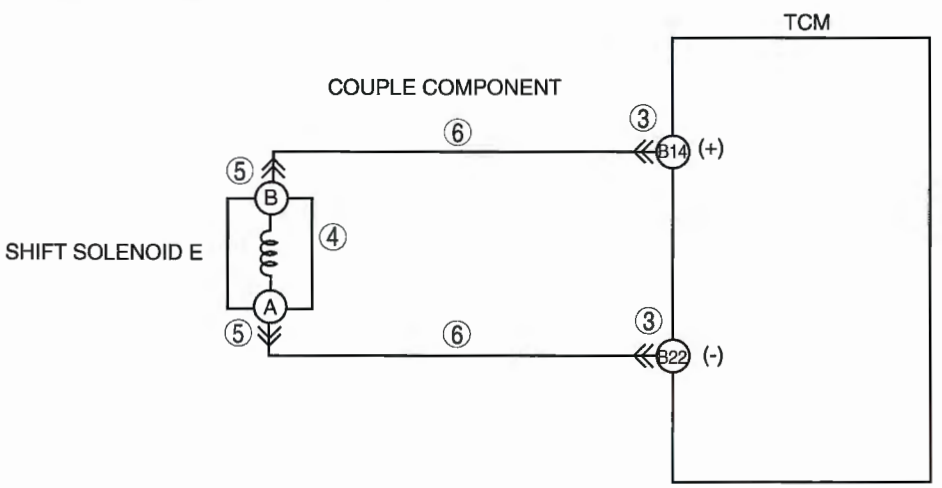

SHIFT SOLENOID E WIRING HARNESS-SIDE CONNECTOR

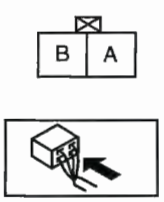

COUPLE COMPONENT CONNECTOR

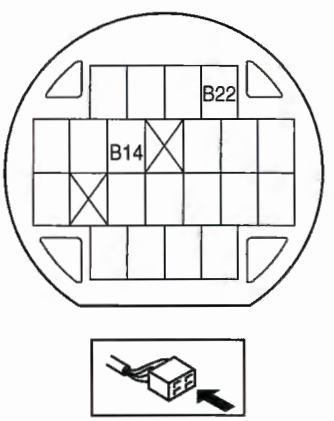

Diagnostic procedure

STEP	INSPECTION		ACTION
1	**VERIFY FREEZE FRAME DATA HAS BEEN RECORDED** • Has the FREEZE FRAME DATA been recorded?	Yes	Go to the next step.
		No	Record the FREEZE FRAME DATA on the repair order, then go to the next step.
2	**VERIFY RELATED REPAIR INFORMATION AVAILABILITY** • Verify related Service Bulletins and/or on-line repair information availability. • Is any related repair information available?	Yes	Perform repair or diagnosis according to the available repair information. • If the vehicle is not repaired, go to the next step.
		No	Go to the next step.
3	**INSPECT TERMINAL COUPLE COMPONENT FOR POOR CONNECTION** • Turn the ignition switch to the LOCK position. • Remove the TCM. (See 05–17B–25 TCM REMOVAL/ INSTALLATION [AW6A-EL].) • Inspect for poor connection (such as damaged/ pulled-out pins, corrosion). • Are terminals normal?	Yes	Go to the next step.
		No	Replace the couple component, then go to Step 7.
4	**INSPECT RESISTANCE OF SHIFT SOLENOID E CIRCUIT** • Inspect for resistance between couple component terminals B14 and B22 (wiring harness-side). • Is resistance **within 5.0—5.6 ohms**? (See 05–17B–20 SOLENOID VALVE INSPECTION [AW6A-EL].)	Yes	Go to go to Step 7.
		No	Go to the next step.
5	**INSPECT TERMINAL SHIFT SOLENOID E FOR POOR CONNECTION** • Disconnect the shift solenoid E connector. • Inspect for poor connection (such as damaged/ pulled-out pins, corrosion). • Are terminals normal?	Yes	Go to the next step.
		No	Replace the couple component, then go to Step 7.
6	**INSPECT TERMINAL COUPLE COMPONENT CIRCUIT FOR SHORT TO POWER** • Inspect for continuity between couple component terminals (wiring harness-side). — Terminal B14 and all terminals except B14/ B22 — Terminal B22 and all terminals except B14/ B22 • Is there continuity?	Yes	Repair or replace the couple component, then go to the next step.
		No	Replace the control valve body, then go to the next step. (See 05–17B–39 CONTROL VALVE BODY REMOVAL/ INSTALLATION [AW6A-EL].)
7	**VERIFY TROUBLESHOOTING OF DTC P0986 COMPLETED** • Make sure to reconnect all the disconnected connectors. • Clear the DTC from the memory using the WDS or equivalent. • Drive the vehicle in D range and make sure that gears shift smoothly from 1GR to 6GR. • Is same DTC present?	Yes	Replace the TCM, then go to the next step. (See 05–17B–25 TCM REMOVAL/INSTALLATION [AW6A-EL].)
		No	Go to the next step.
8	**VERIFY AFTER REPAIR PROCEDURE** • Perform the "After Repair Procedure". (See 05–02B–4 AFTER REPAIR PROCEDURE [AW6A-EL].) • Are any DTCs present?	Yes	Go to the applicable DTC inspection. (See 05–02B–5 DTC TABLE [AW6A-EL].)
		No	Troubleshooting completed.

DTC P0997 [AW6A-EL]

E6U050200000W47

DTC P0997	Shift solenoid F range/performance (stuck)
DETECTION CONDITION	• Feedback current corresponding to solenoid current command value is irregular when engine is running. **Diagnostic support note:** • This is a continuous monitor (CCM). • The MIL illuminates if the TCM detects the above malfunction condition during the first drive cycle. • A PENDING CODE is not available. • FREEZE FRAME DATA is available. • The AT warning light illuminates. • The DTC is stored in the TCM memory.
POSSIBLE CAUSE	• ATF level low • Deteriorated ATF • Shift solenoid F stuck • Control valve stuck • TCM malfunction

Diagnostic procedure

STEP	INSPECTION		ACTION
1	**VERIFY FREEZE FRAME DATA HAS BEEN RECORDED** • Has the FREEZE FRAME DATA been recorded?	Yes	Go to the next step.
		No	Record the FREEZE FRAME DATA on the repair order, then go to the next step.
2	**VERIFY RELATED REPAIR INFORMATION AVAILABILITY** • Verify related Service Bulletins and/or on-line repair information availability. • Is any related repair information available?	Yes	Perform repair or diagnosis according to the available repair information. • If the vehicle is not repaired, go to the next step.
		No	Go to the next step.
3	**INSPECT ATF CONDITION** • Turn the ignition switch to the LOCK position. • Inspect the ATF condition. — Clear red: Normal — Light red (pink): Water mixed in fluid — Reddish brown: Deteriorated ATF • Is it normal? (See 05–17B–11 Automatic Transaxle Fluid (ATF) Condition Inspection.)	Yes	Go to the next step.
		No	If the ATF color is light red or reddish brown, replace ATF, then go to Step 6. (See 05–17B–12 AUTOMATIC TRANSAXLE FLUID (ATF) REPLACEMENT [AW6A-EL].)
4	**INSPECT ATF LEVEL** • Start the engine. • Warm up the ATX. • Is the ATF level within the specification? (See 05–17B–12 Automatic Transaxle Fluid (ATF) Level Inspection.)	Yes	Go to the next step.
		No	Add ATF to the specified level, then go to Step 6. (See 05–17B–12 Automatic Transaxle Fluid (ATF) Level Inspection.)
5	**INSPECT LINE PRESSURE** • Start the engine. • Measure the line pressures. (See 05–17B–4 Line Pressure Test.) • Are the line pressures within the specifications?	Yes	Go to the next step.
		No	• All ranges: Replace the oil pump or control valve body, then go to the next step. • Any ranges: Replace the ATX, then go the next step. (See 05–17B–30 AUTOMATIC TRANSAXLE REMOVAL/INSTALLATION [AW6A-EL].)
6	**VERIFY TROUBLESHOOTING OF DTC P0997 COMPLETED** • Make sure to reconnect all the disconnected connectors. • Clear the DTC from the memory using the WDS or equivalent. • Drive the vehicle in D range and make sure that gears shift smoothly from 1GR to 6GR. • Is same DTC present?	Yes	Replace the TCM, then go to the next step. (See 05–17B–25 TCM REMOVAL/INSTALLATION [AW6A-EL].)
		No	Go to the next step.
7	**VERIFY AFTER REPAIR PROCEDURE** • Perform the "After Repair Procedure". (See 05–02B–4 AFTER REPAIR PROCEDURE [AW6A-EL].) • Are any DTCs present?	Yes	Go to the applicable DTC inspection. (See 05–02B–5 DTC TABLE [AW6A-EL].)
		No	Troubleshooting completed.

DTC P0998 [AW6A-EL]

E6U050200000W48

DTC P0998	Shift solenoid F circuit malfunction (short to ground/open circuit)
DETECTION CONDITION	• Open or short circuit in shift solenoid F signal system (The solenoid circuit current value input to the TCM is continuously **less than 23 mA** for **100 ms or more**). **Diagnostic support note:** • This is a continuous monitor (CCM). • The MIL illuminates if the TCM detects the above malfunction condition during the first drive cycle. • A PENDING CODE is not available. • FREEZE FRAME DATA is available. • The AT warning light illuminates. • The DTC is stored in the TCM memory.
POSSIBLE CAUSE	• Open circuit between shift solenoid F terminal B and TCM terminal B21 • Open circuit between shift solenoid F terminal A and TCM terminal B16 • Short to ground in wiring harness between shift solenoid F terminal B and TCM terminal B21 • Short to ground in wiring harness between shift solenoid F terminal A and TCM terminal B16 • Shift solenoid F malfunction • Damaged connector between line pressure control solenoid and TCM • TCM malfunction

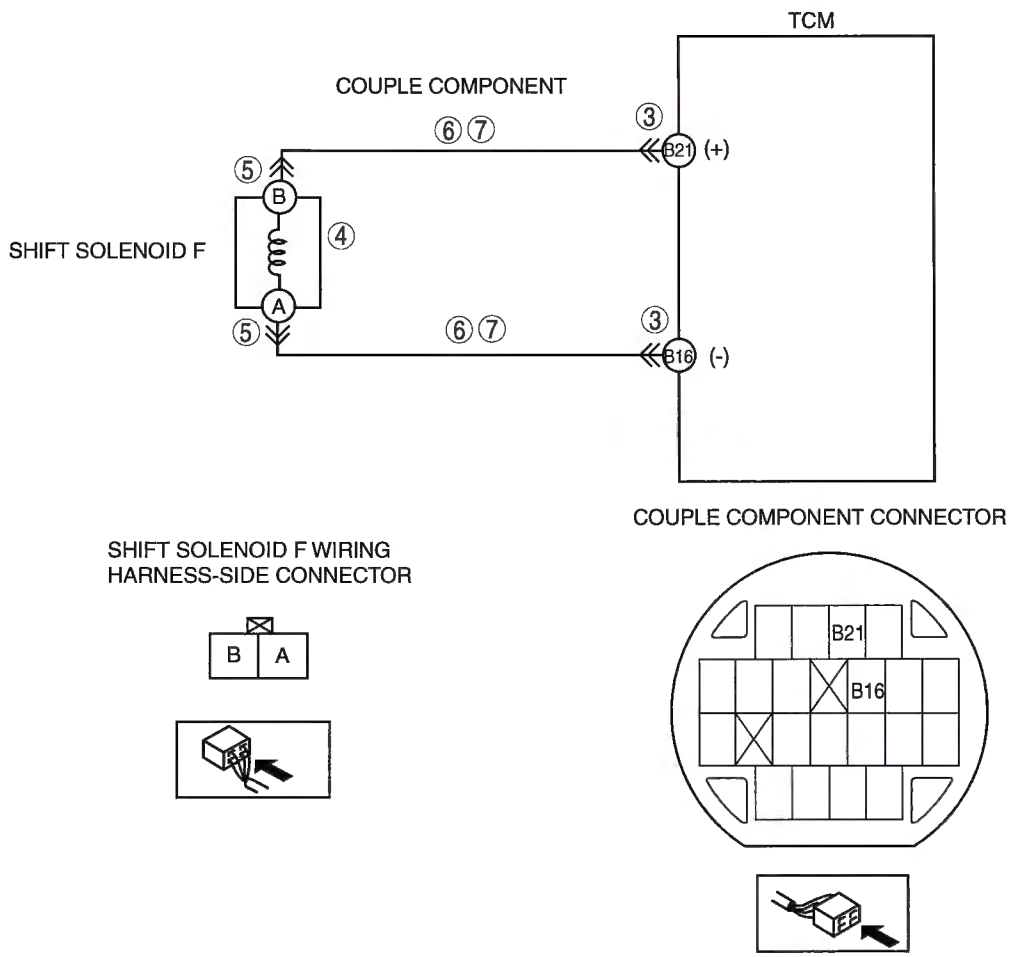

Diagnostic procedure

STEP	INSPECTION		ACTION
1	**VERIFY FREEZE FRAME DATA HAS BEEN RECORDED** • Has the FREEZE FRAME DATA been recorded?	Yes	Go to the next step.
		No	Record the FREEZE FRAME DATA on the repair order, then go to the next step.
2	**VERIFY RELATED REPAIR INFORMATION AVAILABILITY** • Verify related Service Bulletins and/or on-line repair information availability. • Is any related repair information available?	Yes	Perform repair or diagnosis according to the available repair information. • If the vehicle is not repaired, go to the next step.
		No	Go to the next step.
3	**INSPECT TERMINAL COUPLE COMPONENT FOR POOR CONNECTION** • Turn the ignition switch to the LOCK position. • Remove the TCM. (See 05–17B–25 TCM REMOVAL/ INSTALLATION [AW6A-EL].) • Inspect for poor connection (such as damaged/ pulled-out pins, corrosion). • Are terminals normal?	Yes	Go to the next step.
		No	Replace the couple component, then go to Step 8.
4	**INSPECT RESISTANCE OF SHIFT SOLENOID F CIRCUIT** • Inspect for resistance between couple component terminals B21 and B16 (wiring harness-side). • Is resistance **within 5.0—5.6 ohms**? (See 05–17B–20 SOLENOID VALVE INSPECTION [AW6A-EL].)	Yes	Go to go to Step 8.
		No	Go to the next step.
5	**INSPECT TERMINAL SHIFT SOLENOID F FOR POOR CONNECTION** • Disconnect the shift solenoid F connector. • Inspect for poor connection (such as damaged/ pulled-out pins, corrosion). • Are terminals normal?	Yes	Go to the next step.
		No	Replace the couple component, then go to Step 8.
6	**INSPECT TERMINAL COUPLE COMPONENT CIRCUIT FOR OPEN CIRCUIT** • Inspect for continuity between couple component terminals and line pressure control solenoid terminals (wiring harness-side). — Terminal B21 and terminal B — Terminal B16 and terminal A • Is there continuity?	Yes	Go to the next step.
		No	Repair or replace the couple component, then go to Step 8.
7	**INSPECT TERMINAL COUPLE COMPONENT CIRCUIT FOR SHORT TO GROUND** • Inspect for continuity between couple component terminals (wiring harness-side). — Terminal B21 and all terminals except B21/ B16 — Terminal B16 and all terminals except B21/ B16 • Is there continuity?	Yes	Repair or replace the couple component, then go to the next step.
		No	Replace the control valve body, then go to the next step. (See 05–17B–39 CONTROL VALVE BODY REMOVAL/ INSTALLATION [AW6A-EL].)
8	**VERIFY TROUBLESHOOTING OF DTC P0998 COMPLETED** • Make sure to reconnect all the disconnected connectors. • Clear the DTC from the memory using the WDS or equivalent. • Drive the vehicle in D range and make sure that gears shift smoothly from 1GR to 6GR. • Is same DTC present?	Yes	Replace the TCM, then go to the next step. (See 05–17B–25 TCM REMOVAL/INSTALLATION [AW6A-EL].)
		No	Go to the next step.
9	**VERIFY AFTER REPAIR PROCEDURE** • Perform the "After Repair Procedure". (See 05–02B–4 AFTER REPAIR PROCEDURE [AW6A-EL].) • Are any DTCs present?	Yes	Go to the applicable DTC inspection. (See 05–02B–5 DTC TABLE [AW6A-EL].)
		No	Troubleshooting completed.

DTC P0999 [AW6A-EL]

E6U050200000W49

DTC P0999	Shift solenoid F circuit malfunction (short to power)
DETECTION CONDITION	• Short circuit in shift solenoid F signal system (The solenoid circuit current value input to the TCM is continuously **more than 1,333 mA** for **100 ms or more**). **Diagnostic support note:** • This is a continuous monitor (CCM). • The MIL illuminates if the TCM detects the above malfunction condition during the first drive cycle. • A PENDING CODE is not available. • FREEZE FRAME DATA is available. • The AT warning light illuminates. • The DTC is stored in the TCM memory.
POSSIBLE CAUSE	• Short to power in wiring harness between shift solenoid F terminal B and TCM terminal B21 • Short to power in wiring harness between shift solenoid F terminal A and TCM terminal B16 • Shift solenoid F malfunction • Damaged connector between line pressure control solenoid and TCM • TCM malfunction

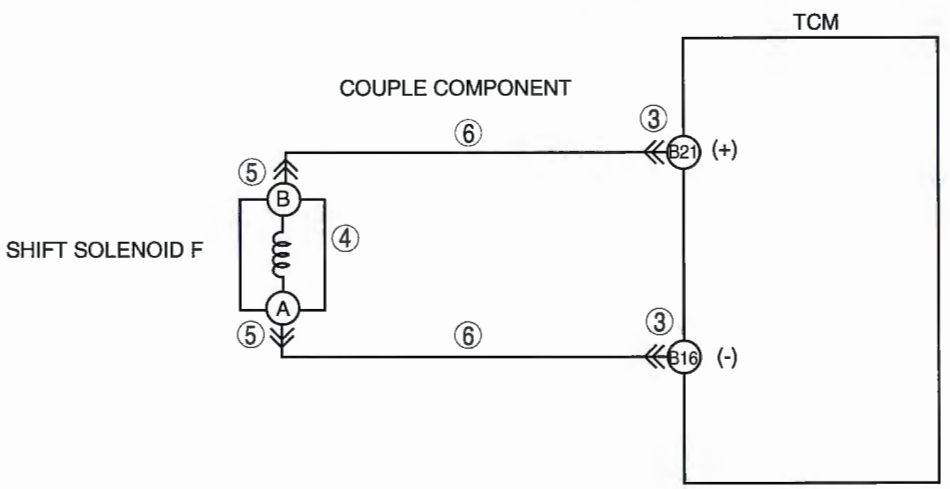

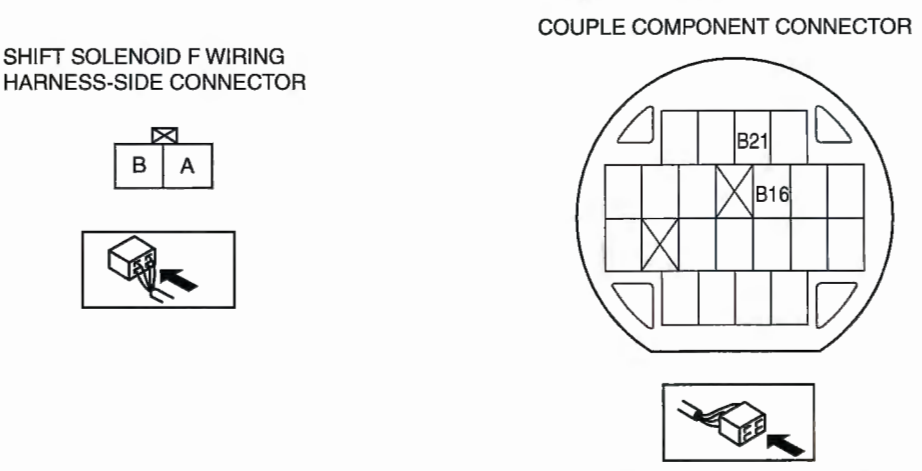

Diagnostic procedure

STEP	INSPECTION		ACTION
1	**VERIFY FREEZE FRAME DATA HAS BEEN RECORDED** • Has the FREEZE FRAME DATA been recorded?	Yes	Go to the next step.
		No	Record the FREEZE FRAME DATA on the repair order, then go to the next step.
2	**VERIFY RELATED REPAIR INFORMATION AVAILABILITY** • Verify related Service Bulletins and/or on-line repair information availability. • Is any related repair information available?	Yes	Perform repair or diagnosis according to the available repair information. • If the vehicle is not repaired, go to the next step.
		No	Go to the next step.
3	**INSPECT TERMINAL COUPLE COMPONENT FOR POOR CONNECTION** • Turn the ignition switch to the LOCK position. • Remove the TCM. (See 05–17B–25 TCM REMOVAL/ INSTALLATION [AW6A-EL].) • Inspect for poor connection (such as damaged/ pulled-out pins, corrosion). • Are terminals normal?	Yes	Go to the next step.
		No	Replace the couple component, then go to Step 7.
4	**INSPECT RESISTANCE OF SHIFT SOLENOID F CIRCUIT** • Inspect for resistance between couple component terminals B21 and B16 (wiring harness-side). • Is resistance **within 5.0—5.6 ohms**? (See 05–17B–20 SOLENOID VALVE INSPECTION [AW6A-EL].)	Yes	Go to go to Step 7.
		No	Go to the next step.
5	**INSPECT TERMINAL SHIFT SOLENOID F FOR POOR CONNECTION** • Disconnect the shift solenoid F connector. • Inspect for poor connection (such as damaged/ pulled-out pins, corrosion). • Are terminals normal?	Yes	Go to the next step.
		No	Replace the couple component, then go to Step 7.
6	**INSPECT TERMINAL COUPLE COMPONENT CIRCUIT FOR SHORT TO POWER** • Inspect for continuity between couple component terminals (wiring harness-side). — Terminal B21 and all terminals except B21/ B16 — Terminal B16 and all terminals except B21/ B16 • Is there continuity?	Yes	Repair or replace the couple component, then go to the next step.
		No	Replace the control valve body, then go to the next step. (See 05–17B–39 CONTROL VALVE BODY REMOVAL/ INSTALLATION [AW6A-EL].)
7	**VERIFY TROUBLESHOOTING OF DTC P0999 COMPLETED** • Make sure to reconnect all the disconnected connectors. • Clear the DTC from the memory using the WDS or equivalent. • Drive the vehicle in D range and make sure that gears shift smoothly from 1GR to 6GR. • Is same DTC present?	Yes	Replace the TCM, then go to the next step. (See 05–17B–25 TCM REMOVAL/INSTALLATION [AW6A-EL].)
		No	Go to the next step.
8	**VERIFY AFTER REPAIR PROCEDURE** • Perform the "After Repair Procedure". (See 05–02B–4 AFTER REPAIR PROCEDURE [AW6A-EL].) • Are any DTCs present?	Yes	Go to the applicable DTC inspection. (See 05–02B–5 DTC TABLE [AW6A-EL].)
		No	Troubleshooting completed.

DTC P1700 [AW6A-EL]

E6U050200000W50

DTC P1700	Valve control solenoid circuit malfunction at R range (valve stuck)
DETECTION CONDITION	• When all of the following conditions are met while driving in R position and the counter drive gear (output} speed is **500 rpm or less**: — The difference between the engine and turbine shaft speeds is **less than 150 rpm** — The turbine shaft speed is more than the estimated turbine speed value, as derived from the counter drive gear (output) speed, plus **200 rpm**. — None of the following present: DTC P0706, P0707, P0708, P0711, P0712, P0713, P0717, P0722, P0961, P0962, P0963, P0973, P0974, P0976, P0977, P0978, P0979, P0980, P0981, P0982, P0983, P0984, P0985, P0986, P0997, P0998, P0999 **Diagnostic support note:** • The MIL illuminates if the TCM detects the above malfunction condition during the first drive cycle. • A PENDING CODE is not available. • FREEZE FRAME DATA is available. • The AT warning light illuminates. • The DTC is stored in the TCM memory.
POSSIBLE CAUSE	• Shift solenoid A stuck • Shift solenoid B stuck • Shift solenoid E stuck • Line pressure control solenoid stuck • C3 clutch slipping • B2 brake slipping • Control valve stuck • TCM malfunction

Diagnostic procedure

STEP	INSPECTION		ACTION
1	**VERIFY FREEZE FRAME DATA HAS BEEN RECORDED** • Has the FREEZE FRAME DATA been recorded?	Yes	Go to the next step.
		No	Record the FREEZE FRAME DATA on the repair order, then go to the next step.
2	**VERIFY RELATED REPAIR INFORMATION AVAILABILITY** • Verify related Service Bulletins and/or on-line repair information availability. • Is any related repair information available?	Yes	Perform repair or diagnosis according to the available repair information. • If the vehicle is not repaired, go to the next step.
		No	Go to the next step.
3	**INSPECT LINE PRESSURE** • Start the engine. • Measure the line pressures. (See 05–17B–4 Line Pressure Test.) • Are the line pressures within the specifications?	Yes	Go to the next step.
		No	All ranges: Replace the oil pump, then go to Step 6. Any ranges: Replace the control valve body, then go to Step 6. (See 05–17B–39 CONTROL VALVE BODY REMOVAL/ INSTALLATION [AW6A-EL].)
4	**INSPECT STALL SPEED** • Measure the stall speed in D range. (See 05–17B–6 Stall Test.) • Is the stall speed within the specification?	Yes	Go to the next step.
		No	Replace the automatic transaxle, then go the Step 6. (See 05–17B–30 AUTOMATIC TRANSAXLE REMOVAL/ INSTALLATION [AW6A-EL].)
5	**INSPECT SOLENOID VALVE** • Inspect the solenoid valve. (See 05–17B–20 SOLENOID VALVE INSPECTION [AW6A-EL].) • Is it normal?	Yes	Go to the next step.
		No	Replace the control valve body, then go to the next step. (See 05–17B–39 CONTROL VALVE BODY REMOVAL/ INSTALLATION [AW6A-EL].)
6	**VERIFY TROUBLESHOOTING OF DTC P1700 COMPLETED** • Make sure to reconnect all the disconnected connectors. • Clear the DTC from the memory using the WDS or equivalent. • Drive the vehicle in D range and make sure that gears shift smoothly from 1GR to 6GR. • Is same DTC present?	Yes	Replace the TCM, then go to the next step. (See 05–17B–25 TCM REMOVAL/INSTALLATION [AW6A-EL].)
		No	Go to the next step.
7	**VERIFY AFTER REPAIR PROCEDURE** • Perform the "After Repair Procedure". (See 05–02B–4 AFTER REPAIR PROCEDURE [AW6A-EL].) • Are any DTCs present?	Yes	Go to the applicable DTC inspection. (See 05–02B–5 DTC TABLE [AW6A-EL].)
		No	Troubleshooting completed.

DTC P2757 [AW6A-EL]

E6U050200000W51

DTC P2757	Torque converter clutch (TCC) stuck off
DETECTION CONDITION	• When all conditions below are satisfied. — ATF temperature **20 °C {68 °F} or more** — Driving in 4GR—6GR at D range — Engine running — Engine speed **less than 400 rpm** — Torque converter clutch (TCC) operating — Difference between engine speed and Counter drive gear (output) revolution speed **(VSS) 100 rpm or more** — None of the following present: DTC P0706, P0707, P0708, P0711, P0712, P0713, P0717, P0722, P0961, P0962, P0963, P0973, P0974, P0976, P0977, P0978, P0979, P0980, P0981, P0982, P0983, P0984, P0985, P0986, P0997, P0998, P0999 **Diagnostic support note:** • This is a continuous monitor (CCM). • The MIL illuminates if the TCM detects the above malfunction condition during the first drive cycle. • A PENDING CODE is not available. • FREEZE FRAME DATA is available. • The AT warning light illuminates. • The DTC is stored in the TCM memory.
POSSIBLE CAUSE	• ATF level low • Deteriorated ATF • TCC control solenoid, and line pressure control solenoid stuck • Line pressure low • Control valve stuck. • TCM malfunction

Diagnostic procedure

STEP	INSPECTION		ACTION
1	**VERIFY FREEZE FRAME DATA HAS BEEN RECORDED** • Has the FREEZE FRAME DATA been recorded?	Yes	Go to the next step.
		No	Record the FREEZE FRAME DATA on the repair order, then go to the next step.
2	**VERIFY RELATED REPAIR INFORMATION AVAILABILITY** • Verify related Service Bulletins and/or on-line repair information availability. • Is any related repair information available?	Yes	Perform repair or diagnosis according to the available repair information. • If the vehicle is not repaired, go to the next step.
		No	Go to the next step.
3	**INSPECT ATF CONDITION** • Turn the ignition switch to the LOCK position. • Inspect the ATF condition. — Clear red: Normal — Light red (pink): Water mixed in fluid — Reddish brown: Deteriorated ATF • Is it normal? (See 05–17B–11 Automatic Transaxle Fluid (ATF) Condition Inspection.)	Yes	Go to the next step.
		No	If the ATF color is milky or reddish brown, replace ATF, then go to Step 7. (See 05–17B–12 AUTOMATIC TRANSAXLE FLUID (ATF) REPLACEMENT [AW6A-EL].)
4	**INSPECT ATF LEVEL** • Start the engine. • Warm up the ATX. • Is the ATF level within the specification? (See 05–17B–12 Automatic Transaxle Fluid (ATF) Level Inspection.)	Yes	Go to the next step.
		No	Add ATF to the specified level, then go to Step 7. (See 05–17B–12 Automatic Transaxle Fluid (ATF) Level Inspection.)
5	**INSPECT LINE PRESSURE** • Start the engine. • Measure the line pressures. (See 05–17B–4 Line Pressure Test.) • Are the line pressures within the specifications?	Yes	Go to the next step.
		No	All ranges: Replace the oil pump, then go to Step 7. Any ranges: Replace the control valve body, then go to Step 6. (See 05–17B–39 CONTROL VALVE BODY REMOVAL/INSTALLATION [AW6A-EL].)
6	**INSPECT SOLENOID VALVE** • Inspect the solenoid valve. (See 05–17B–20 SOLENOID VALVE INSPECTION [AW6A-EL].) • Is it normal?	Yes	Go to the next step.
		No	Replace the control valve body, then go to the next step. (See 05–17B–39 CONTROL VALVE BODY REMOVAL/INSTALLATION [AW6A-EL].)
7	**VERIFY TROUBLESHOOTING OF DTC P2757 COMPLETED** • Make sure to reconnect all the disconnected connectors. • Clear the DTC from the memory using the WDS or equivalent. • Start the engine. • Warm up engine and ATX. • Drive the vehicle under the following conditions for **2 s or more**. — ATF temperature (TFT PID): **20 °C {68 °F} or more** — Drive in the D range, 4GR—6GR (TCC operation) • Are any DTCs present?	Yes	Replace the TCM, then go to the next step. (See 05–17B–25 TCM REMOVAL/INSTALLATION [AW6A-EL].)
		No	Go to the next step.
8	**VERIFY AFTER REPAIR PROCEDURE** • Perform the "After Repair Procedure". (See 05–02B–4 AFTER REPAIR PROCEDURE [AW6A-EL].) • Are any DTCs present?	Yes	Go to the applicable DTC inspection. (See 05–02B–5 DTC TABLE [AW6A-EL].)
		No	DTC troubleshooting completed.

DTC P2758 [AW6A-EL]

E6U050200000W52

DTC P2758	Torque converter clutch (TCC) stuck on
DETECTION CONDITION	• All of the following conditions are satisfied under each of the following accelerator conditions. — ATF temperature **20 °C {68 °F} or more** — Driving in D range — Engine running — Engine speed **within 1,000—3,000rpm** — Torque converter clutch (TCC) no operating — Difference between engine speed and turbine revolution speed **less than 30 rpm** — None of the following present: DTC P0706, P0707, P0708, P0711, P0712, P0713, P0717, P0722, P0961, P0962, P0963, P0973, P0974, P0976, P0977, P0978, P0979, P0980, P0981, P0982, P0983, P0984, P0985, P0986, P0997, P0998, P0999 **Diagnostic support note:** • This is a continuous monitor (CCM). • The MIL does not illuminate if PCM detects the above malfunction conditions during first the drive cycle. • A PENDING CODE is not available. • FREEZE FRAME DATA is not available. • The AT warning light illuminates. • The DTC is stored in the PCM memory.
POSSIBLE CAUSE	• ATF level low • Deteriorated ATF • TCC control solenoid, and line pressure control solenoid stuck • Line pressure low • Control valve stuck • TCM malfunction

Diagnostic procedure

STEP	INSPECTION		ACTION
1	**VERIFY FREEZE FRAME DATA HAS BEEN RECORDED** • Has the FREEZE FRAME DATA been recorded?	Yes	Go to the next step.
		No	Record the FREEZE FRAME DATA on the repair order, then go to the next step.
2	**VERIFY RELATED REPAIR INFORMATION AVAILABILITY** • Verify related Service Bulletins and/or on-line repair information availability. • Is any related repair information available?	Yes	Perform repair or diagnosis according to the available repair information. • If the vehicle is not repaired, go to the next step.
		No	Go to the next step.
3	**INSPECT ATF CONDITION** • Turn the ignition switch to the LOCK position. • Inspect the ATF condition. — Clear red: Normal — Light red (pink): Water mixed in fluid — Reddish brown: Deteriorated ATF • Is it normal? (See 05–17B–11 Automatic Transaxle Fluid (ATF) Condition Inspection.)	Yes	Go to the next step.
		No	If the ATF color is milky or reddish brown, replace ATF, then go to Step 7. (See 05–17B–12 AUTOMATIC TRANSAXLE FLUID (ATF) REPLACEMENT [AW6A-EL].)
4	**INSPECT ATF LEVEL** • Start the engine. • Warm up the ATX. • Is the ATF level within the specification? (See 05–17B–12 Automatic Transaxle Fluid (ATF) Level Inspection.)	Yes	Go to the next step.
		No	Add ATF to the specified level, then go to Step 7. (See 05–17B–12 Automatic Transaxle Fluid (ATF) Level Inspection.)
5	**INSPECT LINE PRESSURE** • Start the engine. • Measure the line pressures. (See 05–17B–4 Line Pressure Test.) • Are the line pressures within the specifications?	Yes	Go to the next step.
		No	All ranges: Replace the oil pump, then go to Step 7. Any ranges: Replace the control valve body, then go to Step 6. (See 05–17B–39 CONTROL VALVE BODY REMOVAL/INSTALLATION [AW6A-EL].)
6	**INSPECT SOLENOID VALVE** • Inspect the solenoid valve. (See 05–17B–20 SOLENOID VALVE INSPECTION [AW6A-EL].) • Is it normal?	Yes	Go to the next step.
		No	Replace the control valve body, then go to the next step. (See 05–17B–39 CONTROL VALVE BODY REMOVAL/INSTALLATION [AW6A-EL].)
7	**VERIFY TROUBLESHOOTING OF DTC P2758 COMPLETED** • Make sure to reconnect all the disconnected connectors. • Clear the DTC from the memory using the WDS or equivalent. • Start the engine. • Warm up engine and ATX. • Drive the vehicle under the following conditions for **2 s or more**. — ATF temperature (TFT PID): **20 °C {68 °F} or more** — Engine speed: **less than 3,000 rpm** — Drive in the D range, 4GR—6GR (TCC no operation) • Are any DTCs present?	Yes	Replace the TCM, then go to the next step. (See 05–17B–25 TCM REMOVAL/INSTALLATION [AW6A-EL].)
		No	Go to the next step.
8	**VERIFY AFTER REPAIR PROCEDURE** • Perform the "After Repair Procedure". (See 05–02B–4 AFTER REPAIR PROCEDURE [AW6A-EL].) • Are any DTCs present?	Yes	Go to the applicable DTC inspection. (See 05–02B–5 DTC TABLE [AW6A-EL].)
		No	DTC troubleshooting completed.

DTC P2762 [AW6A-EL]

E6U050200000W53

DTC P2762	TCC control solenoid range/performance (stuck)
DETECTION CONDITION	• Feedback current corresponding to solenoid current command value is irregular when engine is running. **Diagnostic support note:** • This is a continuous monitor (CCM). • The MIL illuminates if the TCM detects the above malfunction condition during the first drive cycle. • A PENDING CODE is not available. • FREEZE FRAME DATA is available. • The AT warning light illuminates. • The DTC is stored in the TCM memory.
POSSIBLE CAUSE	• ATF level low • Deteriorated ATF • TCC control solenoid stuck • Control valve stuck • TCM malfunction

Diagnostic procedure

STEP	INSPECTION		ACTION
1	**VERIFY FREEZE FRAME DATA HAS BEEN RECORDED** • Has the FREEZE FRAME DATA been recorded?	Yes	Go to the next step.
		No	Record the FREEZE FRAME DATA on the repair order, then go to the next step.
2	**VERIFY RELATED REPAIR INFORMATION AVAILABILITY** • Verify related Service Bulletins and/or on-line repair information availability. • Is any related repair information available?	Yes	Perform repair or diagnosis according to the available repair information. • If the vehicle is not repaired, go to the next step.
		No	Go to the next step.
3	**INSPECT ATF CONDITION** • Turn the ignition switch to the LOCK position. • Inspect the ATF condition. — Clear red: Normal — Light red (pink): Water mixed in fluid — Reddish brown: Deteriorated ATF • Is it normal? (See 05–17B–11 Automatic Transaxle Fluid (ATF) Condition Inspection.)	Yes	Go to the next step.
		No	If the ATF color is light red or reddish brown, replace ATF, then go to Step 6. (See 05–17B–12 AUTOMATIC TRANSAXLE FLUID (ATF) REPLACEMENT [AW6A-EL].)
4	**INSPECT ATF LEVEL** • Start the engine. • Warm up the ATX. • Is the ATF level within the specification? (See 05–17B–12 Automatic Transaxle Fluid (ATF) Level Inspection.)	Yes	Go to the next step.
		No	Add ATF to the specified level, then go to Step 6. (See 05–17B–12 Automatic Transaxle Fluid (ATF) Level Inspection.)
5	**INSPECT LINE PRESSURE** • Start the engine. • Measure the line pressures. (See 05–17B–4 Line Pressure Test.) • Are the line pressures within the specifications?	Yes	Go to the next step.
		No	• All ranges: Replace the oil pump or control valve body, then go to the next step. • Any ranges: Replace the ATX, then go the next step. (See 05–17B–30 AUTOMATIC TRANSAXLE REMOVAL/INSTALLATION [AW6A-EL].)
6	**VERIFY TROUBLESHOOTING OF DTC P2762 COMPLETED** • Make sure to reconnect all the disconnected connectors. • Clear the DTC from the memory using the WDS or equivalent. • Drive the vehicle in D range and make sure that gears shift smoothly from 1GR to 6GR. • Is same DTC present?	Yes	Replace the TCM, then go to the next step. (See 05–17B–25 TCM REMOVAL/INSTALLATION [AW6A-EL].)
		No	Go to the next step.
7	**VERIFY AFTER REPAIR PROCEDURE** • Perform the "After Repair Procedure". (See 05–02B–4 AFTER REPAIR PROCEDURE [AW6A-EL].) • Are any DTCs present?	Yes	Go to the applicable DTC inspection. (See 05–02B–5 DTC TABLE [AW6A-EL].)
		No	Troubleshooting completed.

DTC P2763 [AW6A-EL]

E6U050200000W54

DTC P2763	TCC control solenoid circuit malfunction (short to power)
DETECTION CONDITION	• Short circuit in TCC control solenoid signal system (while TCM monitors solenoid output voltage, the voltage that differs from the signal output by CPU in TCM is detected). **Diagnostic support note:** • This is a continuous monitor (CCM). • The MIL illuminates if the TCM detects the above malfunction condition during the first drive cycle. • A PENDING CODE is not available. • FREEZE FRAME DATA is available. • The AT warning light illuminates. • The DTC is stored in the TCM memory.
POSSIBLE CAUSE	• Short to power in wiring harness between TCC control solenoid terminal B and TCM terminal B9 • Short to power in wiring harness between TCC control solenoid terminal A and TCM terminal B4 • TCC control solenoid malfunction • Damaged connector between line pressure control solenoid and TCM • TCM malfunction

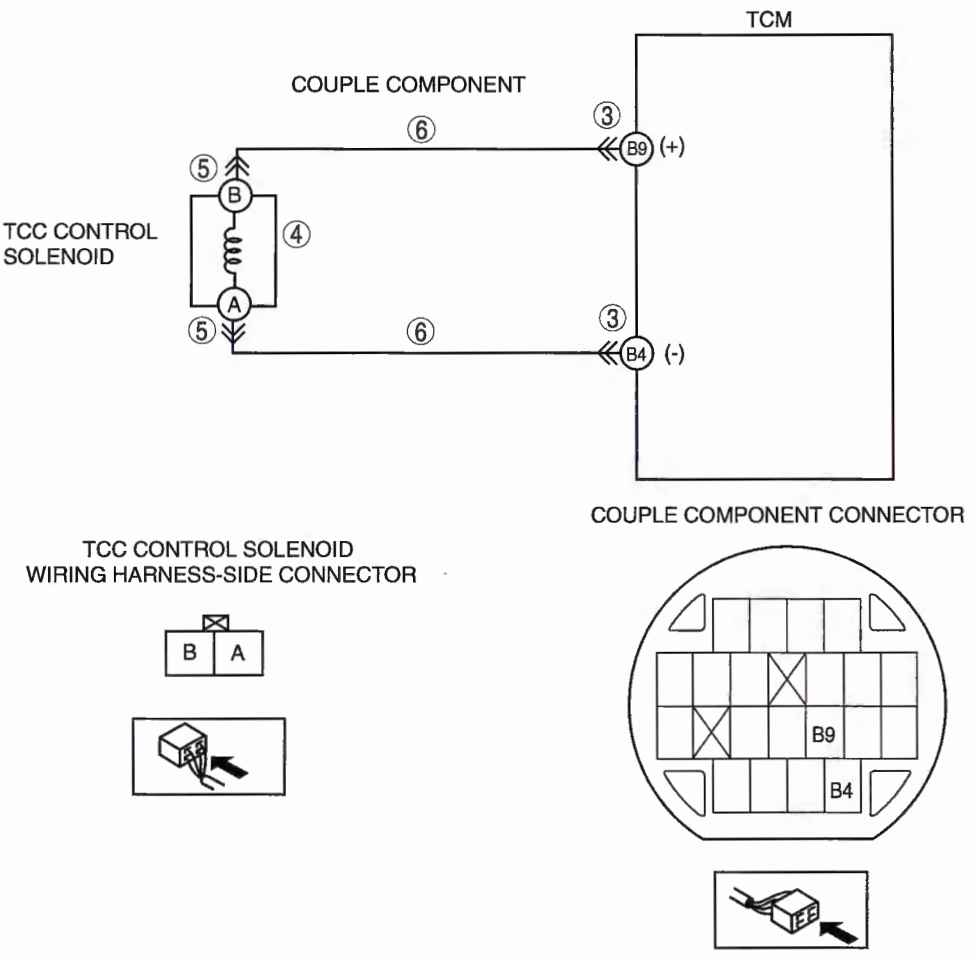

Diagnostic procedure

STEP	INSPECTION		ACTION
1	**VERIFY FREEZE FRAME DATA HAS BEEN RECORDED** • Has the FREEZE FRAME DATA been recorded?	Yes	Go to the next step.
		No	Record the FREEZE FRAME DATA on the repair order, then go to the next step.
2	**VERIFY RELATED REPAIR INFORMATION AVAILABILITY** • Verify related Service Bulletins and/or on-line repair information availability. • Is any related repair information available?	Yes	Perform repair or diagnosis according to the available repair information. • If the vehicle is not repaired, go to the next step.
		No	Go to the next step.
3	**INSPECT TERMINAL COUPLE COMPONENT FOR POOR CONNECTION** • Turn the ignition switch to the LOCK position. • Remove the TCM. (See 05–17B–25 TCM REMOVAL/ INSTALLATION [AW6A-EL].) • Inspect for poor connection (such as damaged/ pulled-out pins, corrosion). • Are terminals normal?	Yes	Go to the next step.
		No	Replace the couple component, then go to Step 7.
4	**INSPECT RESISTANCE OF TCC CONTROL SOLENOID CIRCUIT** • Inspect for resistance between couple component terminals B9 and B4 (wiring harness-side). • Is resistance **within 5.0—5.6 ohms**? (See 05–17B–20 SOLENOID VALVE INSPECTION [AW6A-EL].)	Yes	Go to go to Step 7.
		No	Go to the next step.
5	**INSPECT TERMINAL TCC CONTROL SOLENOID FOR POOR CONNECTION** • Disconnect the TCC control solenoid connector. • Inspect for poor connection (such as damaged/ pulled-out pins, corrosion). • Are terminals normal?	Yes	Go to the next step.
		No	Replace the couple component, then go to Step 7.
6	**INSPECT TERMINAL COUPLE COMPONENT CIRCUIT FOR SHORT TO POWER** • Inspect for continuity between couple component terminals (wiring harness-side). — Terminal B21 and all terminals except B21/ B16 — Terminal B16 and all terminals except B21/ B16 • Is there continuity?	Yes	Repair or replace the couple component, then go to the next step.
		No	Replace the control valve body, then go to the next step. (See 05–17B–39 CONTROL VALVE BODY REMOVAL/ INSTALLATION [AW6A-EL].)
7	**VERIFY TROUBLESHOOTING OF DTC P2763 COMPLETED** • Make sure to reconnect all the disconnected connectors. • Clear the DTC from the memory using the WDS or equivalent. • Drive the vehicle in D range and make sure that gears shift smoothly from 1GR to 6GR. • Is same DTC present?	Yes	Replace the TCM, then go to the next step. (See 05–17B–25 TCM REMOVAL/INSTALLATION [AW6A-EL].)
		No	Go to the next step.
8	**VERIFY AFTER REPAIR PROCEDURE** • Perform the "After Repair Procedure". (See 05–02B–4 AFTER REPAIR PROCEDURE [AW6A-EL].) • Are any DTCs present?	Yes	Go to the applicable DTC inspection. (See 05–02B–5 DTC TABLE [AW6A-EL].)
		No	Troubleshooting completed.

DTC P2764 [AW6A-EL]

E6U050200000W55

DTC P2764	TCC control solenoid circuit malfunction (short to ground/open circuit)
DETECTION CONDITION	• Open or short circuit in TCC control solenoid signal system (while TCM monitors solenoid output voltage the voltage that differs from the signal output by CPU in TCM is detected). **Diagnostic support note:** • This is a continuous monitor (CCM). • The MIL illuminates if the TCM detects the above malfunction condition during the first drive cycle. • A PENDING CODE is not available. • FREEZE FRAME DATA is available. • The AT warning light illuminates. • The DTC is stored in the TCM memory.
POSSIBLE CAUSE	• Open circuit between TCC control solenoid terminal B and TCM terminal B9 • Open circuit between TCC control solenoid terminal A and TCM terminal B4 • Short to ground in wiring harness between TCC control solenoid terminal B and TCM terminal B9 • Short to ground in wiring harness between TCC control solenoid terminal A and TCM terminal B4 • TCC control solenoid malfunction • Damaged connector between line pressure control solenoid and TCM • TCM malfunction

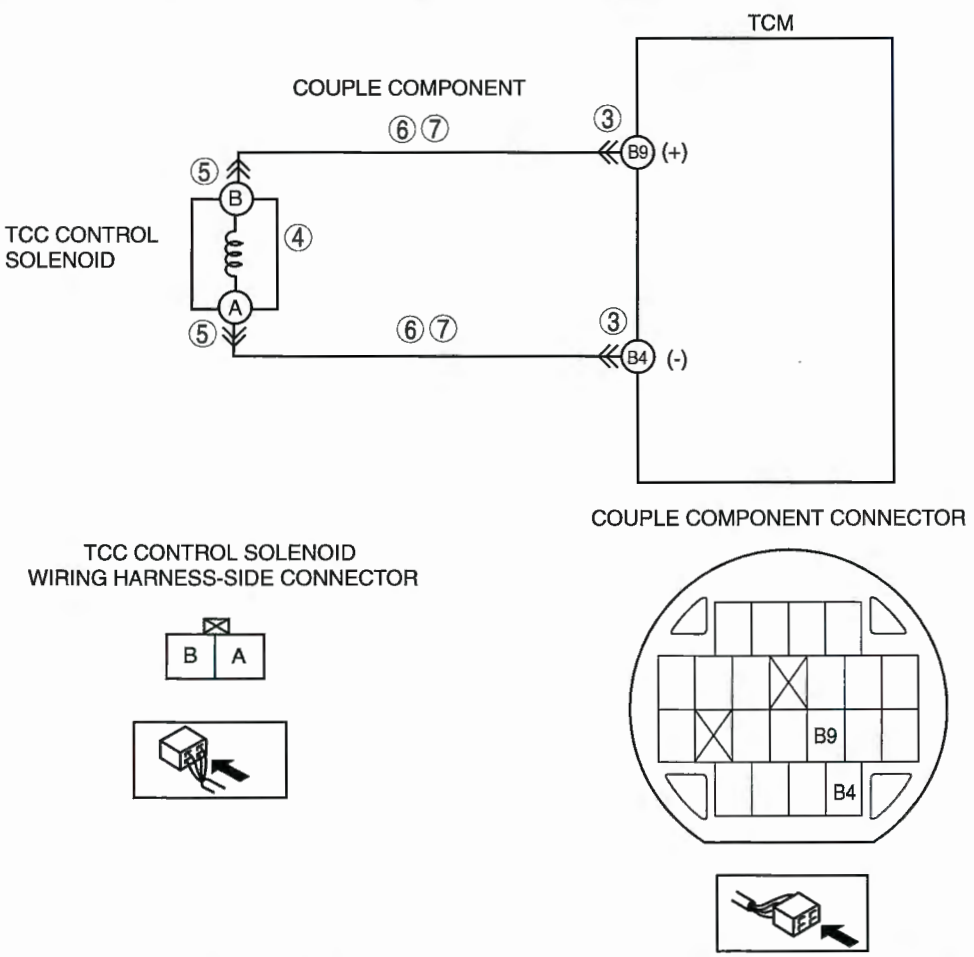

Diagnostic procedure

STEP	INSPECTION		ACTION
1	**VERIFY FREEZE FRAME DATA HAS BEEN RECORDED** • Has the FREEZE FRAME DATA been recorded?	Yes	Go to the next step.
		No	Record the FREEZE FRAME DATA on the repair order, then go to the next step.
2	**VERIFY RELATED REPAIR INFORMATION AVAILABILITY** • Verify related Service Bulletins and/or on-line repair information availability. • Is any related repair information available?	Yes	Perform repair or diagnosis according to the available repair information. • If the vehicle is not repaired, go to the next step.
		No	Go to the next step.
3	**INSPECT TERMINAL COUPLE COMPONENT FOR POOR CONNECTION** • Turn the ignition switch to the LOCK position. • Remove the TCM. (See 05–17B–25 TCM REMOVAL/ INSTALLATION [AW6A-EL].) • Inspect for poor connection (such as damaged/ pulled-out pins, corrosion). • Are terminals normal?	Yes	Go to the next step.
		No	Replace the couple component, then go to Step 8.
4	**INSPECT RESISTANCE OF TCC CONTROL SOLENOID CIRCUIT** • Inspect for resistance between couple component terminals B9 and B4 (wiring harness-side). • Is resistance **within 5.0—5.6 ohms**? (See 05–17B–20 SOLENOID VALVE INSPECTION [AW6A-EL].)	Yes	Go to go to Step 8.
		No	Go to the next step.
5	**INSPECT TERMINAL TCC CONTROL SOLENOID FOR POOR CONNECTION** • Disconnect the TCC control solenoid connector. • Inspect for poor connection (such as damaged/ pulled-out pins, corrosion). • Are terminals normal?	Yes	Go to the next step.
		No	Replace the couple component, then go to Step 8.
6	**INSPECT TERMINAL COUPLE COMPONENT CIRCUIT FOR OPEN CIRCUIT** • Inspect for continuity between couple component terminals and line pressure control solenoid terminals (wiring harness-side). — Terminal B9 and terminal B — Terminal B4 and terminal A • Is there continuity?	Yes	Go to the next step.
		No	Repair or replace the couple component, then go to Step 8.
7	**INSPECT TERMINAL COUPLE COMPONENT CIRCUIT FOR SHORT TO GROUND** • Inspect for continuity between couple component terminals (wiring harness-side). — Terminal B9 and all terminals except B9/B4 — Terminal B4 and all terminals except B9/B4 • Is there continuity?	Yes	Repair or replace the couple component, then go to the next step.
		No	Replace the control valve body, then go to the next step. (See 05–17B–39 CONTROL VALVE BODY REMOVAL/ INSTALLATION [AW6A-EL].)
8	**VERIFY TROUBLESHOOTING OF DTC P2764 COMPLETED** • Make sure to reconnect all the disconnected connectors. • Clear the DTC from the memory using the WDS or equivalent. • Drive the vehicle in D range and make sure that gears shift smoothly from 1GR to 6GR. • Is same DTC present?	Yes	Replace the TCM, then go to the next step. (See 05–17B–25 TCM REMOVAL/INSTALLATION [AW6A-EL].)
		No	Go to the next step.
9	**VERIFY AFTER REPAIR PROCEDURE** • Perform the "After Repair Procedure". (See 05–02B–4 AFTER REPAIR PROCEDURE [AW6A-EL].) • Are any DTCs present?	Yes	Go to the applicable DTC inspection. (See 05–02B–5 DTC TABLE [AW6A-EL].)
		No	Troubleshooting completed.

PID/DATA MONITOR INSPECTION [A6WA-EL]

1. Connect the WDS or equivalent to the DLC-2.
2. Turn the ignition switch to the ON position.
3. Measure the PID value.

E6U050200000W56

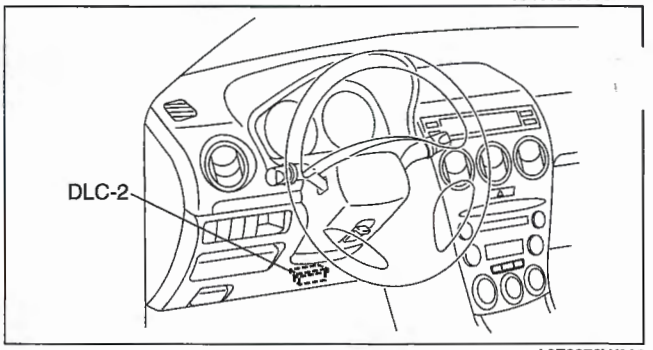

A6E3970W002

Note

- Perform part inspection for the output device after TCM inspection.
- The PID/DATA MONITOR function monitors the calculated value of the input/output signals in the TCM. Therefore, if a monitored value of an output device is out of specification, it is necessary to inspect the monitored value of the input device related to the output device control. Since an output device malfunction is not directly indicated as a malfunction of the monitored value for the output device, it is necessary to inspect the output device individually using the simulation function.

PID/DATA MONITOR AND RECORD function table

Monitor item (Definition)	Unit/ Condition	Condition/Specification	Action	TCM terminal
BOO TCM (Brake switch)	On/Off	• Brake pedal depressed: On • Other: Off	Inspect the brake switch. (See 04–11–9 BRAKE SWITCH INSPECTION.)	—
DTCCNT	—	Indicates number of DTC	Check DTC. (See 05–02B–5 DTC TABLE [AW6A-EL].)	—
DWN SW (Down switch)	On/Off	• Down shift at M range: On • Other: Off	Inspect the selector lever component. (See 05–18–6 SELECTOR LEVER COMPONENT INSPECTION.)	A4
ECT TCM (ECT)	°C, °F	Indicates ECT	Inspect the TCM. (See 05–17B–21 TCM INSPECTION [AW6A-EL].)	—
FDPDTC (FREEZE FRAME DATA)	—	Indicates code of FREEZE FRAME DATA	Inspect the TCM. (See 05–17B–21 TCM INSPECTION [AW6A-EL].)	—
GEAR_RA (Gear ratio)	—	• 1GR: 4.148 • 2GR: 2.370 • 3GR: 1.555 • 4GR: 1.154 • 5GR: 0.859 • 6GR: 0.685	Inspect following PIDs: THOP, TSS, VSS	—
GEAR_SEL (Calculated gear range in TCM)	1st/2nd/3rd/ 4th/5th/6th	• 1GR: 1st • 2GR: 2nd • 3GR: 3rd • 4GR: 4th • 5GR: 5th • 6GR: 6th	Inspect following PIDs: THOP, TSS, VSS	—
LPS (Pressure control solenoid)	A	**100—1,000 mA**	Inspect the pressure control solenoid. (See 05–17B–20 SOLENOID VALVE INSPECTION [AW6A-EL].)	B1, B3
MNL SW (M range switch)	On/Off	• M range: On • Other: Off	Inspect the selector lever component. (See 05–18–6 SELECTOR LEVER COMPONENT INSPECTION.)	A7
OSS (Output shaft speed)	RPM	• Ignition switch ON: **0 rpm** • Indicates output shaft speed	Inspect the VSS. (See 05–17B–19 VEHICLE SPEED SENSOR (VSS) INSPECTION [AW6A-EL].)	B19, B20
PNP_TCM (Park/Neutral)	Drive/ Neutral	• P, N position: Neutral • D, M range or R position: Drive	Inspect the TR switch. (See 05–17B–21 TCM INSPECTION [AW6A-EL].)	–
RPM TCM (Engine speed)	RPM	• Ignition switch ON: **0 rpm** • Idle: **700—800 rpm**	Inspect the TCM. (See 05–17B–21 TCM INSPECTION [AW6A-EL].)	–

Monitor item (Definition)	Unit/ Condition	Condition/Specification	Action	TCM terminal
SC (Shift solenoid C)	A	• P, R, N position or D/M range (5GR, 6GR): solenoid on • Other: solenoid off — **100—1,000 mA**	Inspect the shift solenoid C. (See 05–17B–20 SOLENOID VALVE INSPECTION [AW6A-EL].)	B10, B11
SSD (Shift solenoid D)	A	• P, R, N position or D/M range (1GR, 2GR, 3GR): solenoid on • Other: solenoid off — **100—1,000 mA**	Inspect the shift solenoid D. (See 05–17B–20 SOLENOID VALVE INSPECTION [AW6A-EL].)	B17, B18
SSE (Shift solenoid E)	A	• R position (more than 11 km/h {4 mph}) or D/M range (1GR, 2GR, 4GR, 6GR): solenoid on • Other: solenoid off — **100—1,000 mA**	Inspect the shift solenoid E. (See 05–17B–20 SOLENOID VALVE INSPECTION [AW6A-EL].)	B14, B22
SSF (Shift solenoid F)	A	• P, R, N position or D/M range (1GR, 3GR, 4GR, 5GR): solenoid on • Other: solenoid off — **100—1,000 mA**	Inspect the shift solenoid F. (See 05–17B–20 SOLENOID VALVE INSPECTION [AW6A-EL].)	B16, B21
TCCC (TCC solenoid valve)	A	• TCC on: solenoid on • Other: solenoid off — **200—1,000 mA**	Inspect the TCC control solenoid. (See 05–17B–20 SOLENOID VALVE INSPECTION [AW6A-EL].)	B4, B9
TFT (ATF temperature)	°C, °F	Indicates ATF temperature	Inspect the TFT sensor. (See 05–17B–13 TRANSAXLE FLUID TEMPERATURE (TFT) SENSOR INSPECTION [AW6A-EL].)	B7, B8
TFTV (ATF temperature signal voltage)	V	• ATF temperature 10 °C {50 °F}: **4.78—4.81 V** • ATF temperature 25 °C {77 °F}: **4.61—4.65 V** • ATF temperature 110 °C {230 °F}: **2.30—2.45 V**	Inspect the TFT sensor. (See 05–17B–13 TRANSAXLE FLUID TEMPERATURE (TFT) SENSOR INSPECTION [AW6A-EL].)	B7, B8
TOP (Throttle position)	%	• CTP: 0% • WOT: 100%	Inspect the TP sensor. (See 01–40C–28 THROTTLE POSITION (TP) SENSOR INSPECTION [AJ].)	–
TR (TR switch)	R/N/D/P	• R position: R • N position: N • D range: D • P position: P	Inspect the TR switch. (See 05–17B–21 TCM INSPECTION [AW6A-EL].)	–
TRD (TR switch [D range])	On/Off	• D range: On • Other ranges and all positions: Off	Inspect the TR switch. (See 05–17B–21 TCM INSPECTION [AW6A-EL].)	–
TRR (TR switch [R position])	On/Off	• R position: On • Other positions and all ranges: Off	Inspect the TR switch. (See 05–17B–21 TCM INSPECTION [AW6A-EL].)	–
TSS (Input/turbine speed sensor)	RPM	• Ignition switch ON: **0 rpm** • Idle: **700—800 rpm**	Inspect the input/turbine speed sensor. (See 05–17B–16 INPUT/TURBINE SPEED SENSOR INSPECTION [AW6A-EL].)	–
UP SW (Up switch)	On/Off	• Up shift at M range: On • Other: Off	Inspect the selector lever component. (See 05–18–6 SELECTOR LEVER COMPONENT INSPECTION.)	A3
VSS (Vehicle speed)	KPH, MPH	Indicates vehicle speed	Inspect the VSS. (See 05–17B–19 VEHICLE SPEED SENSOR (VSS) INSPECTION [AW6A-EL].)	–

05–03A SYMPTOM TROUBLESHOOTING [FS5A-EL]

AUTOMATIC TRANSAXLE CONTROL SYSTEM WIRING DIAGRAM [FS5A-EL] 05–03A–2
FOREWORD [FS5A-EL] 05–03A–3
BASIC INSPECTION [FS5A-EL] 05–03A–4
SYMPTOM TROUBLESHOOTING ITEM TABLE [FS5A-EL] 05–03A–5
QUICK DIAGNOSIS CHART [FS5A-EL] 05–03A–7
NO.1 VEHICLE DOES NOT MOVE IN D RANGE, OR IN R POSITION [FS5A-EL] 05–03A–9
NO.2 VEHICLE MOVES IN N POSITION [FS5A-EL] 05–03A–10
NO.3 VEHICLE MOVES IN P POSITION, OR PARKING GEAR DOES NOT DISENGAGE WHEN P IS DISENGAGED [FS5A-EL] 05–03A–10
NO.4 EXCESSIVE CREEP [FS5A-EL] .. 05–03A–10
NO.5 NO CREEP AT ALL [FS5A-EL] ... 05–03A–11
NO.6 LOW MAXIMUM SPEED AND POOR ACCELERATION [FS5A-EL] ... 05–03A–12
NO.7 NO SHIFTING [FS5A-EL] 05–03A–14
NO.8 DOES NOT SHIFT TO FIFTH GEAR (5GR) [FS5A-EL] 05–03A–15
NO.9 ABNORMAL SHIFTING [FS5A-EL] 05–03A–17
NO.10 FREQUENT SHIFTING [FS5A-EL] 05–03A–18
NO.11 SHIFT POINT IS HIGH OR LOW [FS5A-EL] 05–03A–18
NO.12 TORQUE CONVERTER CLUTCH (TCC) NON-OPERATION [FS5A-EL] 05–03A–18
NO.13 NO KICKDOWN [FS5A-EL] 05–03A–20
NO.14 ENGINE FLARES UP OR SLIPS WHEN UPSHIFTING OR DOWNSHIFTING [FS5A-EL] 05–03A–20
NO.15 ENGINE FLARES UP OR SLIPS WHEN ACCELERATING VEHICLE [FS5A-EL] 05–03A–22
NO.16 JUDDER UPON TORQUE CONVERTER CLUTCH (TCC) OPERATION [FS5A-EL] 05–03A–22
NO.17 EXCESSIVE SHIFT SHOCK FROM N TO D OR N TO R POSITION/RANGE [FS5A-EL] 05–03A–24
NO.18 EXCESSIVE SHIFT SHOCK IS FELT WHEN UPSHIFTING AND DOWNSHIFTING [FS5A-EL] 05–03A–26
NO.19 EXCESSIVE SHIFT SHOCK ON TORQUE CONVERTER CLUTCH (TCC) [FS5A-EL] 05–03A–28
NO.20 NOISE OCCURS AT IDLE WHEN VEHICLE IS STOPPED IN ALL POSITIONS/RANGES [FS5A-EL] 05–03A–28
NO.21 NOISE OCCURS AT IDLE WHEN VEHICLE IS STOPPED IN D RANGE, OR IN R POSITION [FS5A-EL] 05–03A–29
NO.22 NO ENGINE BRAKING IN 1GR POSITION OF M RANGE [FS5A-EL] 05–03A–29
NO.23 TRANSAXLE OVERHEATS [FS5A-EL] 05–03A–30
NO.24 ENGINE STALLS WHEN SHIFTED TO D RANGE, OR IN R POSITION [FS5A-EL] 05–03A–31
NO.25 ENGINE STALLS WHEN DRIVING AT SLOW SPEEDS OR STOPPING [FS5A-EL] 05–03A–31
NO.26 STARTER DOES NOT WORK [FS5A-EL] 05–03A–32
NO.27 GEAR POSITION INDICATOR LIGHT DOES NOT ILLUMINATE IN M RANGE [FS5A-EL] 05–03A–32
NO.28 GEAR POSITION INDICATOR LIGHT ILLUMINATES IN D RANGE OR P, N, R POSITIONS [FS5A-EL] 05–03A–32
NO.29 DOES NOT SHIFT UP IN M RANGE [FS5A-EL] 05–03A–33
NO.30 DOES NOT SHIFT DOWN IN M RANGE [FS5A-EL] 05–03A–33

AUTOMATIC TRANSAXLE CONTROL SYSTEM WIRING DIAGRAM [FS5A-EL]

E6U050300000W36

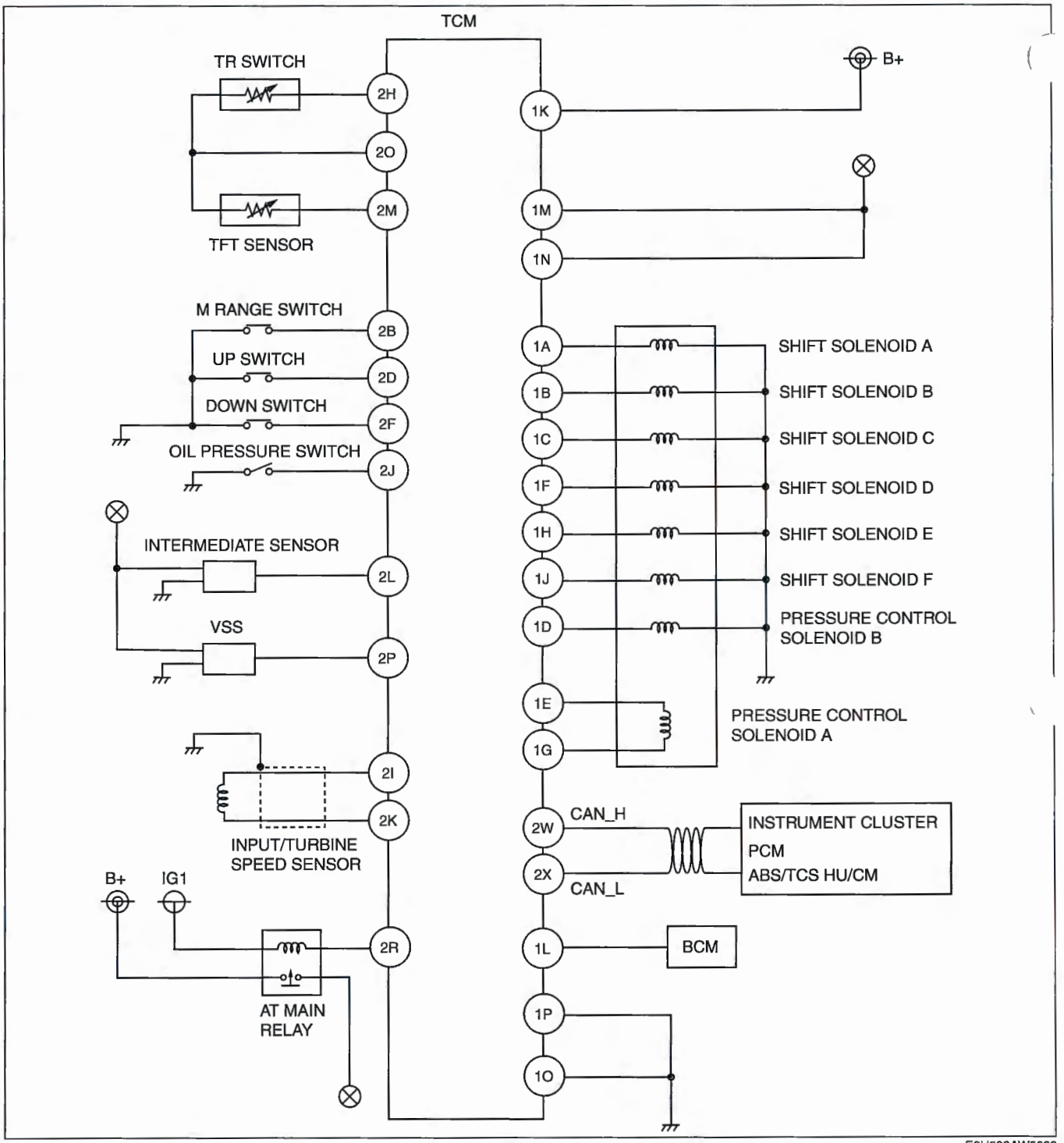

E6U503AW5003

FOREWORD [FS5A-EL]

E6U050300000W37

- When the customer reports a vehicle malfunction, check the malfunction indicator lamp (MIL) indication, AT warning light flash, and diagnostic trouble code (DTC), then diagnose the malfunction according to following flowchart.
  - — If a DTC exists, diagnose the applicable DTC inspection. (See 05–02A–8 DTC TABLE [FS5A-EL].)
  - — If a DTC does not exist, the MIL does not illuminate and AT warning light illuminate, diagnose the applicable symptom troubleshooting. (See 05–03A–5 SYMPTOM TROUBLESHOOTING ITEM TABLE [FS5A-EL].)

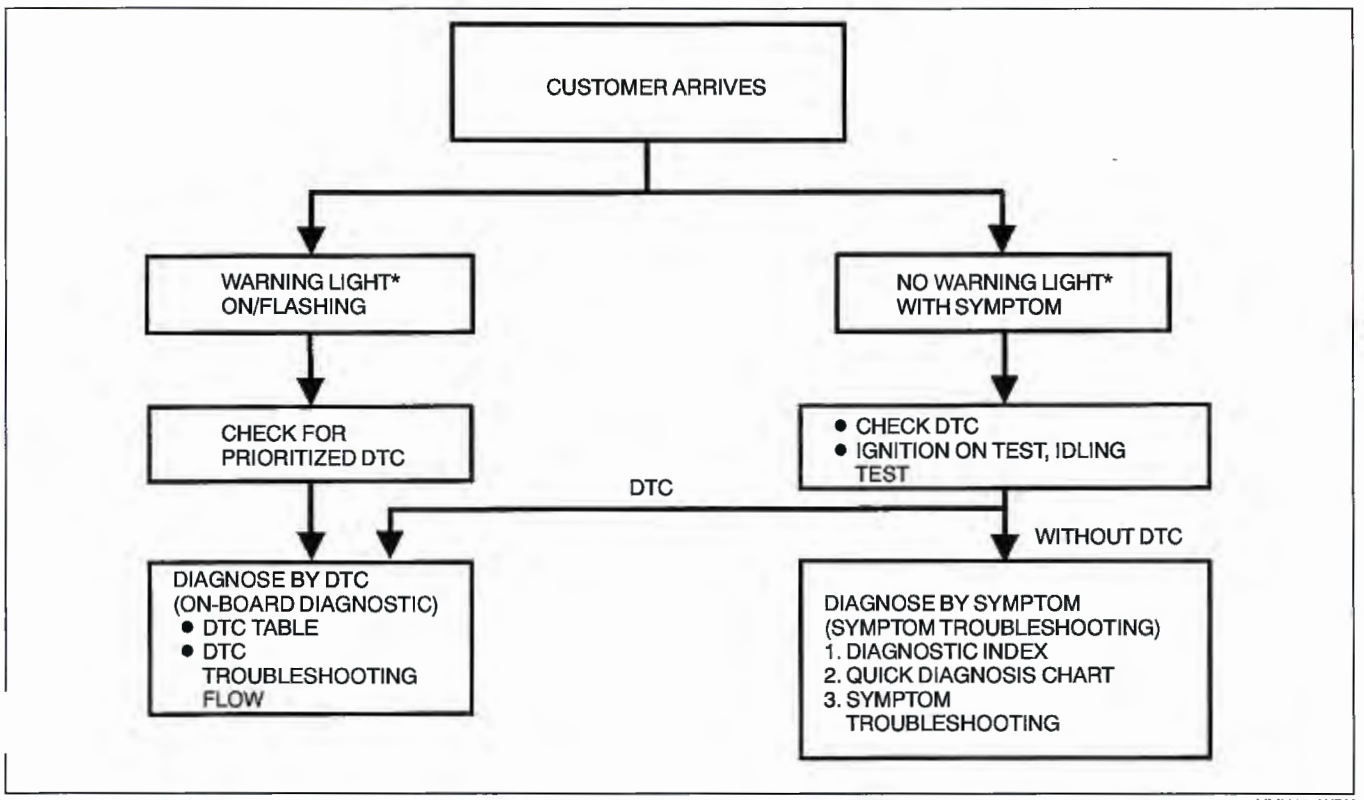

YMU102WBX

*: Malfunction Indicator Lamp (MIL), AT warning light.

BASIC INSPECTION [FS5A-EL]

E6U050300000W38

STEP	INSPECTION		ACTION
1	Perform mechanical system test. (See 05–17A–4 MECHANICAL SYSTEM TEST [FS5A-EL].) Is mechanical system okay?	Yes	Go to the next step.
		No	Repair or replace any defective parts according to inspection result.
2	Turn IG SW to ON. When selector lever is moved, does selector illumination indicate synchronized position to lever location? Also, when other ranges are selected from N or P during idling, does vehicle move **within 1—2 seconds**?	Yes	Go to the next step.
		No	Inspect selector lever and TR switch. Repair or replace defective areas. (See 05–18–6 SELECTOR LEVER INSPECTION.) (See 05–17A–12 TRANSAXLE RANGE (TR) SWITCH INSPECTION [FS5A-EL].) If selector lever and TR switch are okay, go to the next step.
3	Inspect ATF color and condition. (See 05–17A–10 AUTOMATIC TRANSAXLE FLUID (ATF) INSPECTION [FS5A-EL].) Are ATF color and odor normal?	Yes	Go to the next step.
		No	Repair or replace any defective parts according to inspection result. Flush ATX and cooler line as necessary.
4	Perform line pressure test. (See 05–17A–5 Line Pressure Test.) Is line pressure okay?	Yes	Go to the next step.
		No	Adjust accelerator cable as necessary. Repair or replace any defective parts according to inspection result.
5	Perform stall test. (See 05–17A–6 Stall Test.) Is stall speed okay?	Yes	Go to the next step.
		No	Repair or replace any defective parts according to inspection result.
6	Inspect value at the following PCM and TCM PIDs using WDS or equivalent. (See 01–40A–9 PCM INSPECTION [L3].) (See 05–17A–33 TCM INSPECTION [FS5A-EL].) **PCM PIDs:** • APP1 • APP2 • ECT • RPM • TP_REL • VPWR **TCM PIDs:** • TFT • TFTV • TR • TR_SENS • MNL SW • DWN SW • UP SW • THOP • TSS • OSS • VPWR TCM Is PID value okay?	Yes	Perform symptom troubleshooting and follow procedures.
		No	Repair or replace any defective parts according to inspection result.

SYMPTOM TROUBLESHOOTING ITEM TABLE [FS5A-EL]

E6U050300000W39

- Use the chart below to verify the symptoms of the trouble in order to diagnose the appropriate area.

No.	TROUBLESHOOTING ITEM	DESCRIPTION	PAGE
1	Vehicle does not move in D range, or in R position	Vehicle does not move when AP depressed.	(See 05–03A–9 NO.1 VEHICLE DOES NOT MOVE IN D RANGE, OR IN R POSITION [FS5A-EL].)
2	Vehicle moves in N position	Vehicle creeps in N position. Vehicle creeps if brake pedal is not depressed in N position.	(See 05–03A–10 NO.2 VEHICLE MOVES IN N POSITION [FS5A-EL].)
3	Vehicle moves in P position, or parking gear does not disengage when P position is disengaged	Vehicle rolls when on a downward slope and tires do not lock in P position. Tires locked when P position is disengaged, vehicle does not move in D range, and R position when AP depressed, and engine remains in stall condition.	(See 05–03A–10 NO.3 VEHICLE MOVES IN P POSITION, OR PARKING GEAR DOES NOT DISENGAGE WHEN P IS DISENGAGED [FS5A-EL].)
4	Excessive creep	Vehicle accelerates in D range, and R position without depressing accelerator pedal.	(See 05–03A–10 NO.4 EXCESSIVE CREEP [FS5A-EL].)
5	No creep at all	Vehicle does not move in D range, or R position when idling on flat, paved road.	(See 05–03A–11 NO.5 NO CREEP AT ALL [FS5A-EL].)
6	Low maximum speed and poor acceleration	Vehicle acceleration poor at start. Delayed acceleration when accelerator pedal depressed while driving.	(See 05–03A–12 NO.6 LOW MAXIMUM SPEED AND POOR ACCELERATION [FS5A-EL].)
7	No shifting	Single shift range only. Sometimes shifts correctly.	(See 05–03A–14 NO.7 NO SHIFTING [FS5A-EL].)
8	Does not shift to fifth gear (5GR)	Vehicle does not upshift from 4GR to 5GR even though vehicle speed is increased. Vehicle does not shift to 5GR even though accelerator pedal is released in D range at **60 km/h {37 mph}**.	(See 05–03A–15 NO.8 DOES NOT SHIFT TO FIFTH GEAR (5GR) [FS5A-EL].)
9	Abnormal shifting	Shifts incorrectly (incorrect shift pattern).	(See 05–03A–17 NO.9 ABNORMAL SHIFTING [FS5A-EL].)
10	Frequent shifting	Downshifting occurs immediately even when accelerator pedal depressed slightly in D range.	(See 05–03A–18 NO.10 FREQUENT SHIFTING [FS5A-EL].)
11	Shift point is high or low	Shift point considerably different from automatic shift diagram. Shift delays when accelerating. Shift occurs quickly when accelerating and engine speed does not increase.	(See 05–03A–18 NO.11 SHIFT POINT IS HIGH OR LOW [FS5A-EL].)
12	Torque converter clutch (TCC) non-operation	TCC does not operate when vehicle reaches TCC operation range.	(See 05–03A–18 NO.12 TORQUE CONVERTER CLUTCH (TCC) NON-OPERATION [FS5A-EL].)
13	No kickdown	Does not downshift when accelerator pedal fully depressed within kickdown range.	(See 05–03A–20 NO.13 NO KICKDOWN [FS5A-EL].)
14	Engine flares up or slips when upshifting or downshifting	When accelerator pedal is depressed, engine speed increases but vehicle speed increases slowly. When accelerator pedal is depressed while driving, engine speed increases but vehicle speed does not.	(See 05–03A–20 NO.14 ENGINE FLARES UP OR SLIPS WHEN UPSHIFTING OR DOWNSHIFTING [FS5A-EL].)
15	Engine flares up or slips when accelerating vehicle	Engine flares up when accelerator pedal is depressed for upshifting. Engine flares up suddenly when accelerator pedal is depressed for downshifting.	(See 05–03A–22 NO.15 ENGINE FLARES UP OR SLIPS WHEN ACCELERATING VEHICLE [FS5A-EL].)
16	Judder upon torque converter clutch (TCC) operation	Vehicle jolts when TCC is engaged.	(See 05–03A–22 NO.16 JUDDER UPON TORQUE CONVERTER CLUTCH (TCC) OPERATION [FS5A-EL].)

No.	TROUBLESHOOTING ITEM	DESCRIPTION	PAGE
17	Excessive shift shock from N to D or N to R position/range	Strong shock is felt when shifting from N to D or N to R position/range at idle.	(See 05–03A–24 NO.17 EXCESSIVE SHIFT SHOCK FROM N TO D OR N TO R POSITION/RANGE [FS5A-EL].)
18	Excessive shift shock is felt when upshifting and downshifting	Excessive shift shock is felt when depressing accelerator pedal to accelerate at upshifting. During cruising, excessive shift shock is felt when depressing accelerator pedal at downshifting.	(See 05–03A–26 NO.18 EXCESSIVE SHIFT SHOCK IS FELT WHEN UPSHIFTING AND DOWNSHIFTING [FS5A-EL].)
19	Excessive shift shock on torque converter clutch (TCC)	Strong shock is felt when TCC engaged.	(See 05–03A–28 NO.19 EXCESSIVE SHIFT SHOCK ON TORQUE CONVERTER CLUTCH (TCC) [FS5A-EL].)
20	Noise occurs at idle when vehicle is stopped in all positions/ranges	Transaxle is noisy in all positions and ranges when vehicle idling.	(See 05–03A–28 NO.20 NOISE OCCURS AT IDLE WHEN VEHICLE IS STOPPED IN ALL POSITIONS/RANGES [FS5A-EL].)
21	Noise occurs at idle when vehicle is stopped in D range, or in R position	Transaxle is noisy in driving ranges when vehicle idling.	(See 05–03A–29 NO.21 NOISE OCCURS AT IDLE WHEN VEHICLE IS STOPPED IN D RANGE, OR IN R POSITION [FS5A-EL].)
22	No engine braking in 1GR position of M range	Engine speed drops to idle but vehicle coasts when accelerator pedal is released when in 1GR position of M range at low vehicle speed.	(See 05–03A–29 NO.22 NO ENGINE BRAKING IN 1GR POSITION OF M RANGE [FS5A-EL].)
23	Transaxle overheats	Burnt smell emitted from transaxle. Smoke is emitted from transaxle.	(See 05–03A–30 NO.23 TRANSAXLE OVERHEATS [FS5A-EL].)
24	Engine stalls when shifted to D range, or in R position	Engine stalls when shifting from N or P position to D range or R position at idle.	(See 05–03A–31 NO.24 ENGINE STALLS WHEN SHIFTED TO D RANGE, OR IN R POSITION [FS5A-EL].)
25	Engine stalls when driving at slow speeds or stopping	Engine stalls when brake pedal is depressed while driving at low speed or stopping.	(See 05–03A–31 NO.25 ENGINE STALLS WHEN DRIVING AT SLOW SPEEDS OR STOPPING [FS5A-EL].)
26	Starter does not work	Starter does not work even when P or N position is selected.	(See 05–03A–32 NO.26 STARTER DOES NOT WORK [FS5A-EL].)
27	Gear position indicator light does not illuminate in M range	Gear position indicator light in dashboard does not illuminate in M range and ignition switch at ON.	(See 05–03A–32 NO.27 GEAR POSITION INDICATOR LIGHT DOES NOT ILLUMINATE IN M RANGE [FS5A-EL].)
28	Gear position indicator light illuminates in D range or P, N, R positions	Gear position indicator light in dashboard illuminates in D range or P, N, R positions and ignition switch at ON.	(See 05–03A–32 NO.28 GEAR POSITION INDICATOR LIGHT ILLUMINATES IN D RANGE OR P, N, R POSITIONS [FS5A-EL].)
29	Does not shift up in M range	Gear position indIcator light in dashboard illuminates but vehicle does not upshift when selector lever is pushed to "+"side.	(See 05–03A–33 NO.29 DOES NOT SHIFT UP IN M RANGE [FS5A-EL].)
30	Does not shift down in M range	Gear position indicator light in dashboard illuminates but vehicle does not downshift when selector lever is pushed to "–"side.	(See 05–03A–33 NO.30 DOES NOT SHIFT DOWN IN M RANGE [FS5A-EL].)

QUICK DIAGNOSIS CHART [FS5A-EL]

E6U050300000W40

X:Applied

	Symptom item / Cause of trouble	Selector lever is misadjusted	Parking mechanism malfunction	Not within line pressure specification	Not within idle speed specification	Excessive amount of ATF	TP sensor: Signal is not inputted	TP sensor: Malfunction signal is inputted	APP senser: No signal input	APP senser: Abnormal signal input	Input/turbine speed sensor: Signal is not inputted	Input/turbine speed sensor: Malfunction signal is inputted	Vehicle speed sensor: Signal is not inputted	Vehicle speed sensor: Malfunction signal is inputted	ECT sensor: Signal is not inputted	ECT sensor: Malfunction signal is inputted	TR switch: Misadjusted	TR switch: Not operating properly	M range switch: Signal is not inputted	M range switch: Malfunction signal is inputted	Up switch: Signal is not inputted	Up switch: Malfunction signal is inputted	Down switch: Signal is not inputted	Down switch: Malfunction signal is inputted	Brake switch: Always ON
							ATX outer parts		Electrical system components																
1	Vehicle does not move in D range, or in R position	X		X		X																			
2	Vehicle moves in N position	X																							
3	Vehicle moves in P position, or parking gear does not disengage when P is disengaged	X																							
4	Excessive creep		X		X	X																			
5	No creep at all			X		X	X	X		X	X	X	X	X											
6	Low maximum speed and poor acceleration		X	X			X	X	X	X	X	X	X	X			X	X							
7	No shifting			X			X	X	X	X	X	X	X	X											
8	Does not shift to fifth gear (5GR)	X		X			X	X	X	X	X	X	X	X	X	X	X	X							
9	Abnormal shifting	X		X		X	X	X	X	X	X	X	X	X			X	X							
10	Frequent shifting			X			X	X	X	X	X	X	X	X											
11	Shift point is high or low					X	X	X	X	X	X	X	X	X											
12	Torque converter clutch (TCC) non-operation					X	X	X	X	X	X	X	X	X	X	X	X	X							X
13	No kickdown						X	X	X	X															
14	Engine flares up or slips when upshifting or downshifting	X		X			X	X	X	X	X	X	X	X			X	X							
15	Engine flares up or slip when accelerating vehicle	X		X			X	X	X	X	X	X	X	X			X	X							
16	Judder upon torque converter clutch (TCC) operation			X			X	X	X	X	X	X	X	X											
17	Excessive shift shock from N to D or N to R position/range	X		X	X		X	X	X	X	X	X	X	X											
18	Excessive shift shock is felt when upshifting and downshifting			X			X	X	X	X	X	X	X	X											
19	Excessive shift shock on torque converter clutch (TCC)			X			X	X			X	X	X	X											
20	Noise occurs at idle when vehicle is stopped in all positions/ranges																								
21	Noise occurs at idle when vehicle is stopped in D range, or in R position																								
22	No engine braking in 1GR position of M range			X			X	X			X	X	X	X											
23	Transaxle overheats			X		X																			
24	Engine stalls when shifted to D range, or in R position				X							X	X												
25	Engine stalls when driving at slow speeds or stopping				X																				
26	Starter does not work																X	X							
27	Gear position indicator light does not illuminate in M range																		X						
28	Gear position indicator light illuminates in D range or P, N, R positions																			X					
29	Does not shift up in M range																		X		X	X			
30	Does not shift down in M range																		X				X	X	

E6U503AW5001

	Symptom item / Cause of trouble	Poor GND	Signal is not inputted	Malfunction signal is inputted	Shift solenoid D malfunction	Shift solenoid E malfunction	Shift solenoid F malfunction	Shift solenoid A malfunction	Shift solenoid B malfunction	Shift solenoid C malfunction	Pressure control solenoid malfunction B	Pressure control solenoid malfunction A	Control valve is not operating properly	Forward accumulator is not operating properly	Servo apply accumulator is not operating properly	Pressure switch malfunction	Oil cooler is not operating properly	Slipping (Brake, clutch)	Burnt (Brake, clutch)	Torque converter is not operating properly	TCC burnt Inspection method
			Electrical system components										Hydraulic system components					Powertrain system			
			ATX outer parts																		
			Transaxle fluid temperature sensor																		
1	Vehicle does not move in D range, or in R position	X			X			X	X		X	X	X					X	X	X	
2	Vehicle moves in N position												X						X		
3	Vehicle moves in P position, or parking gear does not disengage when P is disengaged																				
4	Excessive creep																				
5	No creep at all	X		X	X			X	X	X		X	X					X	X	X	
6	Low maximum speed and poor acceleration	X	X	X	X		X	X	X	X		X	X					X	X	X	X
7	No shifting	X			X		X	X	X	X		X	X					X	X		
8	Does not shift to fifth gear (5GR)	X	X	X			X	X	X		X		X					X	X		
9	Abnormal shifting	X			X	X		X	X	X			X	X	X			X	X	X	
10	Frequent shifting	X																X	X		
11	Shift point is high or low	X																X			
12	Torque converter clutch (TCC) non-operation	X		X		X		X					X							X	X
13	No kickdown	X			X			X	X	X			X					X	X		
14	Engine flares up or slips when upshifting or downshifting	X			X	X	X	X	X	X		X	X					X	X		
15	Engine flares up or slip when accelerating vehicle	X		X	X	X	X	X		X		X	X					X	X		
16	Judder upon torque converter clutch (TCC) operation	X		X		X		X					X							X	X
17	Excessive shift shock from N to D or N to R position/range	X		X	X			X	X	X	X	X	X	X	X	X			X		
18	Excessive shift shock is felt when upshifting and downshifting	X	X	X	X	X		X	X	X	X	X	X	X	X	X		X	X		
19	Excessive shift shock on torque converter clutch (TCC)	X		X		X		X				X	X							X	X
20	Noise occurs at idle when vehicle is stopped in all positions/ranges																				
21	Noise occurs at idle when vehicle is stopped in D range, or in R position																				
22	No engine braking in 1GR position of M range	X			X	X				X	X		X					X	X		
23	Transaxle overheats			X									X				X				X
24	Engine stalls when shifted to D range, or in R position												X							X	X
25	Engine stalls when driving at slow speeds or stopping												X							X	X
26	Starter does not work																				
27	Gear position indicator light does not illuminate in M range																				
28	Gear position indicator light illuminates in D range or P, N, R positions																				
29	Does not shift up in M range																				
30	Does not shift down in M range																				

E6U503AWF

NO.1 VEHICLE DOES NOT MOVE IN D RANGE, OR IN R POSITION [FS5A-EL]

E6U050300000W41

1	Vehicle does not move in D range, or in R position
DESCRIPTION	• Vehicle does not move when AP is depressed.
POSSIBLE CAUSE	• If the vehicle does not move in D range or R position, basically, the malfunction is in the ATX. (Vehicle will move even with a malfunction in the TCM.) Since a malfunction is in the sensor circuit or output circuit is the cause of the malfunction in the ATX, inspect the sensors, output circuit, and the related harnesses. 1. Clutch slipped, worn (D range-Forward clutch, R position-Reverse clutch, Low and reverse brake) • Line pressure low • Shift solenoid D malfunction • Shift solenoid A malfunction • Shift solenoid B malfunction • Pressure control solenoid A malfunction • Pressure control solenoid B malfunction • Body GND malfunction • Control valve body malfunction 2. Selector lever malfunction 3. Parking mechanism not operating properly 4. Torque converter malfunction **Note** • Before following troubleshooting steps, make sure that Automatic Transaxle On-Board Diagnostic and Automatic Transaxle Basic Inspection are conducted. (See 05–03A–4 BASIC INSPECTION [FS5A-EL].)

05–03A

Diagnostic procedure

STEP	INSPECTION		ACTION
1	When vehicle is stopped on a flat, level road and engine is off, does vehicle move when pushed? (in D range or N, R positions and brake released)	Yes	Go to the next step.
		No	Check for parking mechanism. (See ATX Workshop Manual [FS5A-EL].)
2	Disconnect TCM. Is resistance between TCM ground terminal 1P and body ground, and between TCM ground terminal 1O and body ground **less than 5.0 ohms**?	Yes	Go to the next step.
		No	Repair open ground circuit.
3	Inspect Pressure control solenoid A. (See 05–17A–28 SOLENOID VALVE INSPECTION (PRIMARY CONTROL VALVE BODY) [FS5A-EL].) Is it okay?	Yes	Overhaul control valve body and repair or replace any defective parts. (See ATX Workshop Manual [FS5A-EL].) If problem remains, overhaul transaxle and repair or replace any defective parts. (See ATX Workshop Manual [FS5A-EL].)
		No	Repair or replace any defective parts.
4	• Verify test results. — If okay, return to diagnostic index to service any additional symptoms. — If malfunction remains, inspect related Service Bulletins and/or On-line Repair Information and perform repair or diagnosis. • If vehicle repaired, troubleshooting completed. • If vehicle not repaired or additional diagnostic information not available, replace TCM.		

NO.2 VEHICLE MOVES IN N POSITION [FS5A-EL]

E6U050300000W42

2	Vehicle moves in N position
DESCRIPTION	• Vehicle creeps in N position. • Vehicle creeps if brake pedal is not depressed in N position.
POSSIBLE CAUSE	• If the vehicle moves in N position, basically, the malfunction is in the ATX. Since a malfunction in the sensor circuit or output circuit is the cause of the malfunction in the ATX, inspect the sensors, output circuit, and the related harnesses. 1. Clutch burned (Forward clutch) • Control valve body malfunction 2. Selector lever position disparity (Although the selector indicator shows N position, hydraulic circuit shows D range or R position) **Note** • Before following troubleshooting steps, make sure that Automatic Transaxle On-Board Diagnostic and Automatic Transaxle Basic Inspection are conducted. (See 05–03A–4 BASIC INSPECTION [FS5A-EL].)

Diagnostic procedure

STEP	INSPECTION		ACTION
1	Does vehicle creep when selector lever is moved slightly in N position?	Yes	Go to the next step.
		No	Adjust selector lever. (See 05–18–7 SELECTOR CABLE ADJUSTMENT.)
2	Disconnect TCM. Is resistance between TCM ground terminal 1P and body ground, and between TCM ground terminal 1O and body ground **less than 5.0 ohms**?	Yes	Go to the next step.
		No	Repair open ground circuit. Reconnect TCM.
3	Inspect Pressure control solenoid A circuit. (See 05–17A–28 SOLENOID VALVE INSPECTION (PRIMARY CONTROL VALVE BODY) [FS5A-EL].) Is it okay?	Yes	Overhaul control valve body and repair or replace any defective parts. (See ATX Workshop Manual [FS5A-EL].) If problem remains, overhaul transaxle and repair or replace any defective parts. (See ATX Workshop Manual [FS5A-EL].)
		No	Repair or replace any defective parts.
4	• Verify test results. — If okay, return to diagnostic index to service any additional symptoms. — If malfunction remains, inspect related Service Bulletins and/or On-line Repair Information and perform repair or diagnosis. • If vehicle repaired, troubleshooting completed. • If vehicle not repaired or additional diagnostic information not available, replace TCM.		

NO.3 VEHICLE MOVES IN P POSITION, OR PARKING GEAR DOES NOT DISENGAGE WHEN P IS DISENGAGED [FS5A-EL]

E6U050300000W43

3	Vehicle moves in P position, or parking gear does not disengage when P is disengaged
DESCRIPTION	• Vehicle rolls on a downward slope in P position. • Tires are locked when P is disengaged. Vehicle does not move in D range, and R position when AP is depressed, and engine remains in stall condition.
POSSIBLE CAUSE	1. Parking mechanism malfunction (May have effect on noise or shock from transaxle) 2. Improper adjustment of selector lever 3. If vehicle moves in N position, perform No.2 "VEHICLE MOVES IN N POSITION"

NO.4 EXCESSIVE CREEP [FS5A-EL]

E6U050300000W44

4	Excessive creep
DESCRIPTION	• Vehicle accelerates in D range, and R position without depressing accelerator pedal.
POSSIBLE CAUSE	1. Engine idle speed high (transaxle system is not cause of problem) 2. Go to No.9 "FAST IDLE/RUNS ON" (See 01–03A–33 NO.9 FAST IDLE/RUNS ON [L3].)

NO.5 NO CREEP AT ALL [FS5A-EL]

E6U050300000W45

5	No creep at all
DESCRIPTION	• Vehicle does not move in D range and R position when idling on flat, paved road.
POSSIBLE CAUSE	• Either transaxle is stuck in 3GR or 4GR position, or clutch slippage due to a stuck 3–4 clutch is stuck. 1. Clutch burned • Line pressure low • Shift solenoid D malfunction • Shift solenoid A malfunction • Shift solenoid B malfunction • Shift solenoid C malfunction • Pressure control solenoid A malfunction • Body GND malfunction • Control valve body malfunction 2. Transaxle fixed in 3GR (Operation of fail-safe function) • Short or open circuit in wiring harness • Poor connection of connector • Electronic parts of output and input system have malfunction 3. Engine torque is not start • Torque converter malfunction **Note** • Before following troubleshooting steps, make sure that Automatic Transaxle On-Board Diagnostic and Automatic Transaxle Basic Inspection are conducted. (See 05–03A–4 BASIC INSPECTION [FS5A-EL].)

Diagnostic procedure

STEP	INSPECTION		ACTION
1	Does vehicle creep in any range/position?	Yes	Go to the next step.
		No	Inspect or adjust selector lever. (See 05–18–7 SELECTOR LEVER COMPONENT REMOVAL/INSTALLATION.)
2	Check value at the following PCM PIDs using WDS or equivalent. (See 01–40A–9 PCM INSPECTION [L3].) • APP1 • APP2 • TP_REL Are PID values okay?	Yes	Go to the next step.
		No	Repair or replace any defective parts.
3	Disconnect TCM. Is resistance between TCM ground terminal 1P and body ground, and between TCM ground terminal 1O and body ground **less than 5.0 ohms**?	Yes	Go to the next step.
		No	Repair open ground circuit.
4	Inspect Pressure control solenoid A. (See 05–17A–28 SOLENOID VALVE INSPECTION (PRIMARY CONTROL VALVE BODY) [FS5A-EL].) Is it okay?	Yes	Overhaul control valve body and repair or replace any defective parts. (See ATX Workshop Manual [FS5A-EL].) If problem remains, overhaul transaxle and repair or replace any defective parts. (See ATX Workshop Manual [FS5A-EL].)
		No	Repair or replace any defective parts.
5	• Verify test results. — If okay, return to diagnostic index to service any additional symptoms. — If malfunction remains, inspect related Service Bulletins and/or On-line Repair Information and perform repair or diagnosis. • If vehicle repaired, troubleshooting completed. • If vehicle not repaired or additional diagnostic information not available, replace TCM.		

NO.6 LOW MAXIMUM SPEED AND POOR ACCELERATION [FS5A-EL]

E6U050300000W46

6	Low maximum speed and poor acceleration
DESCRIPTION	• Vehicle acceleration is poor at start. • Delayed acceleration when accelerator pedal is depressed while driving.
POSSIBLE CAUSE	• If the clutch is stuck or does not stay in 3GR, the malfunction is in engine circuit. 1. Clutch slipped, burned • Line pressure low • Shift solenoid D malfunction • Shift solenoid A malfunction • Shift solenoid B malfunction • Shift solenoid C malfunction • Shift solenoid F malfunction • Pressure control solenoid A malfunction • Body GND malfunction • Control valve body malfunction 2. Signal malfunction • Vehicle speed sensor malfunction • Sensor GND malfunction • Accelerator pedal position sensor malfunction • TP sensor malfunction • Input/turbine speed sensor malfunction 3. Transaxle fixed in 3GR (Operation of fail-safe function) • Short or open circuit in wiring • Poor connection of connector • Electronic parts of output and input system have malfunction 4. Insufficient starting torque (Suspected when in-gear condition, shift control and engine circuit are normal) • Torque converter have malfunction (Poor operation, stuck) 5. Engagement of TCC operation range (Operation of fail-safe function) • Transaxle fluid temperature sensor malfunction (Short or open circuit) 6. Transaxle fixed in M range • M range switch malfunction 7. TR switch adjustment incorrect **Note** • Before following troubleshooting steps, make sure that Automatic Transaxle On-Board Diagnostic and Automatic Transaxle Basic Inspection are conducted. (See 05–03A–4 BASIC INSPECTION [FS5A-EL].)

Diagnostic procedure

STEP	INSPECTION		ACTION
1	With ignition switch at ON, does gear position indicator light indication correspond to selector lever position?	Yes	Go to the next step.
		No	Go to No.27 "GEAR POSITION INDICATOR LIGHT DOES NOT ILLUMINATE IN M RANGE", or No.30 "GEAR POSITION INDICATOR LIGHT ILLUMINATES IN D RANGE OR P, N, R POSITIONS."
2	Go to No.12 "LACK/LOSS OF POWER-ACCELERATION/CRUISE". (See 01–03A–39 NO.12 LACK/LOSS OF POWER-ACCELERATION/CRUISE [L3].) Is CIS system okay?	Yes	Go to the next step.
		No	Repair or replace any defective parts.
3	Disconnect transaxle connector. Does vehicle operate as follows? **D range: 3GR (fixed)** **R position: Reverse**	Yes	Go to the next step.
		No	Overhaul control valve body and repair or replace any defective parts. (See ATX Workshop Manual [FS5A-EL].) If problem remains, overhaul transaxle and repair or replace any defective parts.
4	Drive vehicle in D range. Does vehicle start from stop in first gear?	Yes	Go to the next step.
		No	Check value at the following. (See 01–40A–9 PCM INSPECTION [L3].) (See 05–17A–33 TCM INSPECTION [FS5A-EL].) **PCM PIDs (using WDS or equivalent):** • APP1 • APP2 • TP_REL • VSS **TCM PIDs (using WDS or equivalent):** • TSS • OSS • TR Repair or replace any defective parts.
5	Inspect the value at the following TCM PIDs using WDS or equivalent. • SSA/SS1 • SSB/SS2 • SSC/SS3 • SSD/SS4 • SSF_SS6 Are the PID values normal?	Yes	Inspect for shift solenoid stuck. • If shift solenoids are okay, go to the next step.
		No	Check the value at the following. **PCM PIDs (using WDS or equivalent):** • APP • TP_REL **TCM PIDs (using WDS or equivalent):** • THOP • OSS • TSS • TR
6	Perform the stall test. (See 05–17A–6 Stall Test.) Is stall speed okay?	Yes	Reverify symptoms of malfunction.
		No	Overhaul transaxle and repair or replace any defective parts. (See ATX Workshop Manual [FS5A-EL].)
7	• Verify test results. — If okay, return to diagnostic index to service any additional symptoms. — If malfunction remains, inspect related Service Bulletins and/or On-line Repair Information and perform repair or diagnosis. • If vehicle repaired, troubleshooting completed. • If vehicle not repaired or additional diagnostic information not available, replace TCM.		

NO.7 NO SHIFTING [FS5A-EL]

E6U050300000W47

7	No shifting
DESCRIPTION	• Single shift range only. • Sometimes it shifts correctly.
POSSIBLE CAUSE	• When the gear position is fixed in 3GR due to the fail-safe operation, the malfunction is in the ATX. • Perform malfunction diagnosis according to No.6 "LOW MAXIMUM SPEED AND POOR ACCELERATION". 1. Clutch slippage, burned • Line pressure low • Shift solenoid D malfunction • Shift solenoid A malfunction • Shift solenoid B malfunction • Shift solenoid C malfunction • Shift solenoid F malfunction • Pressure control solenoid A malfunction • Body GND malfunction • Control valve body malfunction 2. Signal malfunction • Vehicle speed sensor malfunction • Sensor GND malfunction • Accelerator pedal position sensor malfunction • TP sensor malfunction • Input/turbine speed sensor malfunction 3. Transaxle fixed in 3GR (Operation in fail-safe function) • Short or open circuit in wiring harness • Poor connection of connector • Disconnected shift solenoid connector • Poor ground of shift solenoid 4. Transaxle fixed in M range • M range switch malfunction

NO.8 DOES NOT SHIFT TO FIFTH GEAR (5GR) [FS5A-EL]

E6U050300000W48

8	Does not shift to fifth gear (5GR)
ESCRIPTION	• Vehicle does not upshift from 4GR to 5GR even though vehicle speed is increased. • Vehicle does not shift to 5GR even though accelerator pedal is released in D range at **60 km/h {37 mph}**.
POSSIBLE CAUSE	• Basically, TCC does not operate when fail-safe is operating. Verify the DTCs first. If the TCC operates when driving at high speeds only, malfunction (improper adjustment) is in the M range switch circuit or TR switch circuit. **Caution** • **If the TCC is stuck, inspect it. In addition, inspect the oil cooler for foreign particles which may have mixed in with the ATF.** 1. TCC piston slipped, burned • Line pressure low • TP sensor malfunction • Accelerator pedal position sensor malfunction • Engine coolant temperature sensor malfunction • Vehicle speed sensor malfunction • Input/turbine speed sensor malfunction • Sensor GND malfunction 2. Transaxle fluid temperature sensor malfunction • Short or open circuit in wiring harness • Poor connection of connector • Sensor malfunction 3. TR switch malfunction • Short or open circuit in wiring harness • Poor connection of connector • Sensor malfunction • Selector lever adjustment incorrect • TR switch adjustment incorrect 4. Pressure control solenoid B, shift solenoid A, shift solenoid B, shift solenoid D, Shift solenoid F valve malfunction • Short or open circuit in wiring harness • Poor connection of connector • Solenoid valve stuck 5. M range switch malfunction 6. Control valve body malfunction **Note** • Before following troubleshooting steps, make sure that Automatic Transaxle On-Board Diagnostic and Automatic Transaxle Basic Inspection are conducted. (See 05–03A–4 BASIC INSPECTION [FS5A-EL].)

Diagnostic procedure

STEP	INSPECTION		ACTION
1	With ignition switch at ON, does gear position indicator light indication correspond to selector lever position?	Yes	Go to the next step.
		No	Go to No.27 "GEAR POSITION INDICATOR LIGHT DOES NOT ILLUMINATE IN M RANGE", or No. 30 "GEAR POSITION INDICATOR LIGHT ILLUMINATES IN D RANGE OR P, N, R POSITIONS."
2	Inspect voltage at the following TCM PIDs using WDS or equivalent. (See 05–17A–33 TCM INSPECTION [FS5A-EL].) • TFT • TFTV Is voltage okay?	Yes	Go to the next step.
		No	Repair or replace any defective parts.
3	Inspect the value at the following TCM PIDs using WDS or equivalent. • LPS B • SSA/SS1 • SSB/SS2 • SSD/SS4 • SSF_SS6 Are the PID values normal?	Yes	Overhaul the control valve body and repair or replace any malfunctioning parts. (See ATX workshop manual [FS5A-EL].) If any problem remains, overhaul the transaxle and repair or replace any malfunctioning parts. (See ATX workshop manual [FS5A-EL].)
		No	Go to the next step.
4	Disconnect TCM. Is resistance between TCM ground terminal 1P and body ground, and between TCM ground terminal 1O and body ground **less than 5.0 ohms**?	Yes	Check value at the following TCM PIDs using WDS or equivalent. **PCM PIDs (using WDS or equivalent):** • TR • TSS • OSS Repair or replace any defective parts.
		No	Repair open ground circuit. Reconnect TCM.
5	• Verify test results. — If okay, return to diagnostic index to service any additional symptoms. — If malfunction remains, inspect related Service Bulletins and/or On-line Repair Information and perform repair or diagnosis. • If vehicle repaired, troubleshooting completed. • If vehicle not repaired or additional diagnostic information not available, replace TCM.		

NO.9 ABNORMAL SHIFTING [FS5A-EL]

E6U050300000W49

9	Abnormal shifting
DESCRIPTION	• Shift incorrectly (incorrect shift pattern).
POSSIBLE CAUSE	• There is a malfunction in the signal circuit which controls shifting (accelerator pedal position sensor, TP sensor, input/turbine speed sensor, vehicle speed sensor), the control valve is stuck, the accumulator (forward or servo apply) is stuck, or the clutch circuit is stuck. 1. Clutch slipped, burned • Line pressure low • Control valve body malfunction • Shift solenoid D malfunction • Shift solenoid E malfunction • Shift solenoid A malfunction • Shift solenoid B malfunction • Shift solenoid C malfunction • Shift solenoid F malfunction • Pressure control solenoid B malfunction • Body GND malfunction 2. Signal malfunction • Vehicle speed sensor malfunction • Sensor GND malfunction • TP sensor malfunction • Accelerator pedal position sensor malfunction • Input/turbine speed sensor malfunction 3. TR switch malfunction • Selector lever adjustment incorrect • TR switch adjustment incorrect **Note** • Before following troubleshooting steps, make sure that Automatic Transaxle On-Board Diagnostic and Automatic Transaxle Basic Inspection are conducted. (See 05–03A–4 BASIC INSPECTION [FS5A-EL].)

05–03A

Diagnostic procedure

STEP	INSPECTION		ACTION
1	Disconnect TCM. Is resistance between TCM ground terminal 1P and body ground, and between TCM ground terminal 1O and body ground **less than 5.0 ohms**?	Yes	Go to the next step.
		No	Repair open ground circuit. Reconnect TCM.
2	Check value at the following. (See 01–40A–9 PCM INSPECTION [L3].) (See 05–17A–33 TCM INSPECTION [FS5A-EL].) **PCM PIDs (using WDS or equivalent):** • APP • TP_REL **TCM PIDs (using WDS or equivalent):** • THOP • TSS • OSS • VSS Are they okay?	Yes	Overhaul control valve body and repair or replace any defective parts. (See ATX Workshop Manual [FS5A-EL].) If problem remains, overhaul transaxle and repair or replace any defective parts. (See ATX Workshop Manual [FS5A-EL].)
		No	Repair or replace any defective parts.
3	• Verify test results. — If okay, return to diagnostic index to service any additional symptoms. — If malfunction remains, inspect related Service Bulletins and/or On-line Repair Information and perform repair or diagnosis. • If vehicle repaired, troubleshooting completed. • If vehicle not repaired or additional diagnostic information not available, replace TCM.		

NO.10 FREQUENT SHIFTING [FS5A-EL]

E6U050300000W50

10	Frequent shifting
DESCRIPTION	• Downshifting occurs immediately even when accelerator pedal is depressed slightly in D range.
POSSIBLE CAUSE	• The circuit which is the cause is basically the same as No.9 "ABNORMAL SHIFTING". However, a malfunction of the input signal to the accelerator pedal position sensor, TP sensor, input/turbine speed sensor, vehicle speed sensor (including the sensor GND, sensor harness and connector), or clutch slippage (clutch stuck, low pressure in line) may also be the cause.

NO.11 SHIFT POINT IS HIGH OR LOW [FS5A-EL]

E6U050300000W51

11	Shift point is high or low
DESCRIPTION	• Shift point considerably different from automatic shift diagram. • Shift delays when accelerating. • Shift occurs quickly when accelerating and engine speed does not increase.
POSSIBLE CAUSE	• If the transaxle does not shift abnormally, there is a malfunction of the input signal to the accelerator pedal position sensor, TP sensor, input/turbine speed sensor, or vehicle speed sensor (including sensor GND). • If the engine speed is high or low, regardless normal shifting, inspect the tachometer. • Verify that the output signal of the accelerator pedal position sensor and TP sensor change linearly.

NO.12 TORQUE CONVERTER CLUTCH (TCC) NON-OPERATION [FS5A-EL]

E6U050300000W52

12	Torque converter clutch (TCC) non-operation
DESCRIPTION	• TCC does not operate when vehicle reaches TCC operation range.
POSSIBLE CAUSE	• Basically, the TCC does not operate when the fail-safe is operating. Verify the DTC first. **Caution** **• If the TCC is stuck, inspect it. In addition, inspect the oil cooler for foreign particles which may have mixed in with the ATF.** 1. TCC burned (1) Input sensor system malfunction • Vehicle speed sensor • Input/turbine speed sensor • Sensor GND (2) Output solenoid valve system malfunction (Sticking) • Shift solenoid E malfunction • Shift solenoid A malfunction (3) Control valve body malfunction system (Poor operation, stuck) • TCC hydraulic pressure system 2. TP sensor malfunction (Not operating linear) 3. Accelerator pedal position sensor malfunction (Not operating linear) 4. Input/turbine speed sensor or vehicle speed sensor malfunction 5. Brake switch malfunction (Always ON) 6. ECT sensor malfunction **Note** • Before following troubleshooting steps, make sure that Automatic Transaxle On-Board Diagnostic and Automatic Transaxle Basic Inspection are conducted. (See 05–03A–4 BASIC INSPECTION [FS5A-EL].)

Diagnostic procedure

STEP	INSPECTION		ACTION
1	With ignition switch at ON, does gear position indicator light indication correspond to selector lever position?	Yes	Go to the next step.
		No	Go to No.27 "GEAR POSITION INDICATOR LIGHT DOES NOT ILLUMINATE IN M RANGE", or No.30 "GEAR POSITION INDICATOR LIGHT ILLUMINATES IN D RANGE OR P, N, R POSITIONS."
2	Check value at the following. (See 01–40A–9 PCM INSPECTION [L3].) (See 05–17A–33 TCM INSPECTION [FS5A-EL].) **PCM PIDs (using WDS or equivalent):** • APP • TP_REL • VSS **TCM PIDs (using WDS or equivalent):** • THOP • OSS • TSS Are they okay?	Yes	Go to the next step.
		No	Repair or replace any defective parts.
3	Disconnect TCM. Is resistance between TCM ground terminal 1P and body ground, and between TCM ground terminal 1O and body ground **less than 5.0 ohms**?	Yes	Go to the next step.
		No	Repair harness.
4	Measure resistance between TCM terminal 1A and transaxle connector terminal A, and between TCM terminal 1H and transaxle connector terminal F. Are the resistances **less than 5.0 ohms**?	Yes	Go to the next step.
		No	Repair shift solenoid A or E circuit. Reconnect TCM.
5	Inspect shift solenoids A and E. (See 05–17A–28 SOLENOID VALVE INSPECTION (PRIMARY CONTROL VALVE BODY) [FS5A-EL].) Are the shift solenoids operating properly?	Yes	Replace TCM.
		No	Overhaul control valve body and repair or replace any defective parts. (See ATX Workshop Manual [FS5A-EL].) If problem remains, overhaul transaxle and repair or replace any defective parts. (See ATX Workshop Manual [FS5A-EL].)
6	• Verify test results. — If okay, return to diagnostic index to service any additional symptoms. — If malfunction remains, inspect related Service Bulletins and/or On-line Repair Information and perform repair or diagnosis. • If vehicle repaired, troubleshooting completed. • If vehicle not repaired or additional diagnostic information not available, replace TCM.		

NO.13 NO KICKDOWN [FS5A-EL]

E6U050300000W53

13	No kickdown
DESCRIPTION	• Does not downshift when accelerator pedal is fully depressed within kickdown range.
POSSIBLE CAUSE	• If transaxle does not downshift though shifting is normal, malfunction is in accelerator pedal position sensor or TP sensor circuit (including sensor GND, sensor harness and connector).

NO.14 ENGINE FLARES UP OR SLIPS WHEN UPSHIFTING OR DOWNSHIFTING [FS5A-EL]

E6U050300000W54

14	Engine flares up or slips when upshifting or downshifting
DESCRIPTION	• When accelerator pedal is depressed for driveway, engine speed increases but vehicle speed increases slowly. • When accelerator pedal is depressed while driving, engine speed increases but vehicle speed does not.
POSSIBLE CAUSE	• There is clutch slip because clutch is stuck or line pressure is low. 1. Clutch stuck, slippage (forward clutch, 3–4 clutch, 2–4 brake band, one-way clutch) • Line pressure low • Shift solenoid D malfunction • Shift solenoid E malfunction • Shift solenoid A malfunction • Shift solenoid B malfunction • Shift solenoid C malfunction • Shift solenoid F malfunction • Pressure control solenoid A malfunction • Body GND malfunction • Control valve body malfunction 2. Signal malfunction • Vehicle speed sensor malfunction • Sensor GND malfunction • TP sensor malfunction • Accelerator pedal position sensor malfunction • Input/turbine speed sensor malfunction 3. Poor operation of mechanical pressure • Selector lever position disparity • TR switch position disparity **Note** • Before following troubleshooting steps, make sure that Automatic Transaxle On-Board Diagnostic and Automatic Transaxle Basic Inspection are conducted. (See 05–03A–4 BASIC INSPECTION [FS5A-EL].)

Diagnostic procedure

STEP	INSPECTION		ACTION
1	Is shift point okay?	Yes	Go to the next step.
		No	Go to No.9 "ABNORMAL SHIFTING".
2	Check value at the following PCM PIDs using WDS or equivalent. (See 01–40A–9 PCM INSPECTION [L3].) • APP • TP_REL Are PID values okay?	Yes	Go to the next step.
		No	Repair or replace any defective parts.
3	Disconnect TCM. Is resistance between TCM ground terminal 1P and body ground, and between TCM ground terminal 1O and body ground **less than 5.0 ohms**?	Yes	Go to the next step.
		No	Repair harness. Reconnect TCM.
4	Inspect LPS PID value. (See 05–17A–33 TCM INSPECTION [FS5A-EL].) Is the LPS PID value normal?	Yes	Overhaul control valve body and repair or replace any defective parts. (See ATX Workshop Manual [FS5A-EL].) If problem remains, overhaul transaxle and repair or replace any defective parts. (See ATX Workshop Manual [FS5A-EL].)
		No	Repair or replace any defective parts.
5	• Verify test results. — If okay, return to diagnostic index to service any additional symptoms. — If malfunction remains, inspect related Service Bulletins and/or On-line Repair Information and perform repair or diagnosis. • If vehicle repaired, troubleshooting completed. • If vehicle not repaired or additional diagnostic information not available, replace TCM.		

NO.15 ENGINE FLARES UP OR SLIPS WHEN ACCELERATING VEHICLE [FS5A-EL]

E6U050300000W55

15	Engine flares up or slips when accelerating vehicle
DESCRIPTION	• Engine flares up when accelerator pedal is depressed for upshifting. • Engine flares up suddenly when accelerator pedal is depressed for downshifting.
POSSIBLE CAUSE	• The malfunction is basically the same as for No.14 "ENGINE FLARES UP OR SLIPS WHEN UPSHIFTING OR DOWNSHIFTING". If conditions for No.14 worsen, the malfunction will develop to No.15.

NO.16 JUDDER UPON TORQUE CONVERTER CLUTCH (TCC) OPERATION [FS5A-EL]

E6U050300000W56

16	Judder upon torque converter clutch (TCC) operation
DESCRIPTION	• Vehicle jolts when TCC is engaged.
POSSIBLE CAUSE	• Poor TCC engagement due to either slippage because the TCC is stuck or the line pressure is low **Caution** **• If the TCC is stuck, inspect it. In addition, inspect the oil cooler for foreign particles which may have mixed in with the ATF.** 1. Torque converter clutch piston slipped, burned • Line pressure high • Shift solenoid A malfunction • Shift solenoid E malfunction • Control valve body malfunction • Body GND malfunction • Pressure control solenoid A malfunction 2. Signal malfunction • Vehicle speed sensor malfunction • Sensor GND malfunction • TFT sensor malfunction • TP sensor malfunction • Accelerator pedal position sensor malfunction • Input/turbine speed sensor malfunction 3. Torque converter malfunction **Note** • Before following troubleshooting steps, make sure that Automatic Transaxle On-Board Diagnostic and Automatic Transaxle Basic Inspection are conducted. (See 05–03A–4 BASIC INSPECTION [FS5A-EL].)

Diagnostic procedure

STEP	INSPECTION		ACTION
1	Inspect voltage at the following TCM terminals. (See 05–17A–33 TCM INSPECTION [FS5A-EL].) • 2I, 2K (Input/turbine speed sensor) Are they okay?	Yes	Go to the next step.
		No	Repair or replace any defective parts.
2	Disconnect TCM. Is resistance between TCM ground terminal 1P and body ground, and between TCM ground terminal 1O and body ground **less than 5.0 ohms**?	Yes	Go to the next step.
		No	Repair harness.
3	Measure resistance between following TCM terminal and transaxle connector terminal. • TCM terminal 1A and transaxle connector terminal A • TCM terminal 1H and transaxle connector terminal F Is the resistance **less than 5.0 ohms**?	Yes	Go to the next step.
		No	Repair shift solenoid A circuit.
4	Inspect shift solenoid. (See 05–17A–28 SOLENOID VALVE INSPECTION (PRIMARY CONTROL VALVE BODY) [FS5A-EL].) Is the solenoid valve operating properly?	Yes	Go to the next step.
		No	Overhaul control valve body and repair or replace any defective parts. (See ATX Workshop Manual [FS5A-EL].) If problem remains, overhaul transaxle and repair or replace any defective parts. (See ATX Workshop Manual [FS5A-EL].)
5	Inspect LPS PID value. (See 05–17A–33 TCM INSPECTION [FS5A-EL].) Is the LPS PID value normal?	Yes	Overhaul control valve body and repair or replace any defective parts. (See ATX Workshop Manual [FS5A-EL].) If problem remains, overhaul transaxle and repair or replace any defective parts. (See ATX Workshop Manual [FS5A-EL].)
		No	Replace TCM.
6	• Verify test results. — If okay, return to diagnostic index to service any additional symptoms. — If malfunction remains, inspect related Service Bulletins and/or On-line Repair Information and perform repair or diagnosis. • If vehicle repaired, troubleshooting completed. • If vehicle not repaired or additional diagnostic information not available, replace TCM.		

NO.17 EXCESSIVE SHIFT SHOCK FROM N TO D OR N TO R POSITION/RANGE [FS5A-EL]

E6U050300000W57

17	Excessive shift shock from N to D or N to R position/range
DESCRIPTION	• Strong shock felt when shifting from N to D or N to R position/range.
POSSIBLE CAUSE	• Shift shock may worsen when the fail-safe is operating. If no DTC is output, the shift shock may worse. due to poor operation of the control valve body or sticking of the clutch. 1. Clutch burned (N→D: Forward clutch, N→R: Reverse clutch or low and reverse brake) • Line pressure low, high • TP sensor malfunction • Accelerator pedal position sensor malfunction • Vehicle speed sensor malfunction • Input/turbine speed sensor malfunction • Shift solenoid B malfunction • Shift solenoid D malfunction • Shift solenoid A malfunction • Shift solenoid C malfunction • Pressure control solenoid A malfunction • Control valve body malfunction • Sensor GND malfunction • Body GND malfunction 2. Poor hydraulic operation (Malfunction in range change) • Forward accumulator malfunction • Servo apply accumulator malfunction • Pressure switch malfunction 3. Idle speed high 4. Poor tightening torque of engine mount, exhaust mount 5. Poor operation of mechanical pressure • Selector lever position disparity **Note** • Before following troubleshooting steps, make sure that Automatic Transaxle On-Board Diagnostic and Automatic Transaxle Basic Inspection are conducted. (See 05–03A–4 BASIC INSPECTION [FS5A-EL].)

Diagnostic procedure

STEP	INSPECTION		ACTION
1	Does shift shock occur only when engine cold?	Yes	Go to the next step.
		No	Go to Step 3.
2	Disconnect TCM. Is resistance between TCM ground terminal 1P and body ground, and between TCM ground terminal 1O and body ground **less than 5.0 ohms**?	Yes	Check value at the following. (See 01–40A–9 PCM INSPECTION [L3].) (See 05–17A–33 TCM INSPECTION [FS5A-EL].) **PCM PIDs (using WDS or equivalent):** • APP • TP_REL **TCM PIDs (using WDS or equivalent):** • THOP • TFT • TFTV Repair or replace any defective parts.
		No	Repair harness. Reconnect TCM.
3	Perform stall test. (See 05–17A–6 Stall Test.) Is stall speed okay?	Yes	Go to the next step.
		No	Go to Step 5.
4	Inspect voltage at the following TCM PID using WDS or equivalent. (See05–17A–33 TCM INSPECTION [FS5A-EL].) • TR Is the PID value normal?	Yes	Overhaul control valve body and repair or replace any defective parts. (See ATX Workshop Manual [FS5A-EL].) If problem remains, overhaul transaxle and repair or replace any defective parts. (See ATX Workshop Manual [FS5A-EL].)
		No	Repair or replace any defective parts.
5	Check value at the following PCM PIDs using WDS or equivalent. (See 01–40A–9 PCM INSPECTION [L3].) • APP • TP_REL Are PID values okay?	Yes	Go to the next step.
		No	Repair or replace any defective parts.
6	Disconnect TCM. Is resistance between TCM ground terminal 1P and body ground, and between TCM ground terminal 1O and body ground **less than 5.0 ohms**?	Yes	Go to the next step.
		No	Repair harness. Reconnect TCM.
7	Inspect LPS PID value. (See 05–17A–33 TCM INSPECTION [FS5A-EL].) Is the LPS PID value normal?	Yes	Overhaul control valve body and repair or replace any defective parts. (See ATX Workshop Manual [FS5A-EL].) If problem remains, overhaul transaxle and repair or replace any defective parts. (See ATX Workshop Manual [FS5A-EL].)
		No	Repair or replace any defective parts.
8	• Verify test results. — If okay, return to diagnostic index to service any additional symptoms. — If malfunction remains, inspect related Service Bulletins and/or On-line Repair Information and perform repair or diagnosis. • If vehicle repaired, troubleshooting completed. • If vehicle not repaired or additional diagnostic information not available, replace TCM.		

NO.18 EXCESSIVE SHIFT SHOCK IS FELT WHEN UPSHIFTING AND DOWNSHIFTING [FS5A-EL]

E6U050300000W58

18	Excessive shift shock is felt when upshifting and downshifting
DESCRIPTION	• Excessive shift shock felt when depressing accelerator pedal to accelerate at upshifting. During cruising, excessive shift shock is felt when depressing accelerator pedal at downshifting.
POSSIBLE CAUSE	• Shift shock may worsen when fail-safe is operating. The shift shock may worsen if the signal from the accelerator pedal position sensor, TP sensor, input/turbine speed sensor, or vehicle speed sensor has a malfunction. 1. Clutch slipped, burned (Forward clutch, 2–4 brake band, 3–4 clutch) • Line pressure low, high • Shift solenoid D malfunction • Shift solenoid E malfunction • Shift solenoid A malfunction • Shift solenoid B malfunction • Shift solenoid C malfunction • Pressure control solenoid B malfunction • Pressure control solenoid A malfunction • Accelerator pedal position sensor misadjustment • Control valve body malfunction • Body GND malfunction 2. Signal malfunction • Transaxle temperature sensor malfunction • Vehicle speed sensor malfunction • Sensor GND malfunction • TP sensor malfunction • Accelerator pedal position sensor malfunction • Input/turbine speed sensor malfunction 3. Poor hydraulic operation (Malfunction in range change) • Pressure switch malfunction • Forward accumulator malfunction • Servo apply accumulator malfunction 4. Engine mounts installation • Loose attaching bolts • Worn parts **Note** • Before following troubleshooting steps, make sure that Automatic Transaxle On-Board Diagnostic and Automatic Transaxle Basic Inspection are conducted. (See 05–03A–4 BASIC INSPECTION [FS5A-EL].)

Diagnostic procedure

STEP	INSPECTION		ACTION
1	Inspect the engine mounts for loose tightening bolts or worn parts. Are all engine mounts normal?	Yes	Go to the next step.
		No	Readjust, tighten or replace engine mounts.
2	Perform stall test. (See 05–17A–6 Stall Test.) Is stall speed okay?	Yes	Go to the next step.
		No	Repair or replace any defective parts.
3	Check value at the following PCM PIDs using WDS or equivalent. (See 01–40A–9 PCM INSPECTION [L3].) • APP • TP_REL Are PID values okay?	Yes	Go to the next step.
		No	Repair or replace any defective parts.
4	Disconnect TCM. Is resistance between TCM ground terminal 1P and body ground, and between TCM ground terminal 1O and body ground **less than 5.0 ohms**?	Yes	Go to the next step.
		No	Repair harness. Reconnect TCM.
5	Inspect LPS PID value. (See 05–17A–33 TCM INSPECTION [FS5A-EL].) Is the LPS PID value normal?	Yes	Overhaul control valve body and repair or replace any defective parts. (See ATX Workshop Manual [FS5A-EL].) If problem remains, overhaul transaxle and repair or replace any defective parts. (See ATX Workshop Manual [FS5A-EL].)
		No	Repair or replace any defective parts.
6	• Verify test results. — If okay, return to diagnostic index to service any additional symptoms. — If malfunction remains, inspect related Service Bulletins and/or On-line Repair Information and perform repair or diagnosis. • If vehicle repaired, troubleshooting completed. • If vehicle not repaired or additional diagnostic information not available, replace TCM.		

NO.19 EXCESSIVE SHIFT SHOCK ON TORQUE CONVERTER CLUTCH (TCC) [FS5A-EL]

E6U050300000W59

19	Excessive shift shock on torque converter clutch (TCC)
DESCRIPTION	• Strong shock is felt when TCC engaged.
POSSIBLE CAUSE	• The troubleshooting flow is the same as No.16 "JUDDER UPON TORQUE CONVERTER CLUTCH (TCC) OPERATION".

NO.20 NOISE OCCURS AT IDLE WHEN VEHICLE IS STOPPED IN ALL POSITIONS/RANGES [FS5A-EL]

E6U050300000W60

20	Noise occurs at idle when vehicle is stopped in all positions/ranges
DESCRIPTION	• Transaxle noisy in all positions and ranges when vehicle is idling.
POSSIBLE CAUSE	• The oil pump may cause a high-pitched noise to be emitted from the transaxle at idle. **Note** • If a noise is emitted during shifting only, the malfunction is in shift solenoid D, E, F or shift solenoid A, B, C, pressure control solenoid B. If a noise is emitted during shifting at certain gears only or during deceleration only, it is gear noise. • Before following troubleshooting steps, make sure that Automatic Transaxle On-Board Diagnostic and Automatic Transaxle Basic Inspection are conducted. (See 05–03A–4 BASIC INSPECTION [FS5A-EL].)

Diagnostic procedure

STEP	INSPECTION		ACTION
1	Inspect engine condition. Is there any engine concern (i.e. rough idle)?	Yes	Go to appropriate symptom troubleshooting. (See 01–03A–10 ENGINE SYMPTOM TROUBLESHOOTING [L3].)
		No	Go to the next step.
2	Does noise stop when transaxle connector is disconnected?	Yes	Go to the next step.
		No	Overhaul control valve body and repair or replace any defective parts. (See ATX Workshop Manual [FS5A-EL].) If problem remains, overhaul transaxle and repair or replace any defective parts. (See ATX Workshop Manual [FS5A-EL].)
3	Check value at the following. (See 01–40A–9 PCM INSPECTION [L3].) (See 05–17A–33 TCM INSPECTION [FS5A-EL].) **PCM PIDs (using WDS or equivalent):** • APP • TP_REL • VSS **TCM PIDs (using WDS or equivalent):** • THOP • OSS • TSS Are they okay?	Yes	Go to the next step.
		No	Repair or replace any defective parts.
4	Disconnect TCM. Is resistance between TCM ground terminal 1P and body ground, and between TCM ground terminal 1O and body ground **less than 5.0 ohms**?	Yes	Go to the next step.
		No	Repair harness. Reconnect TCM.
5	Inspect LPS PID value. (See 05–17A–33 TCM INSPECTION [FS5A-EL].) Is the LPS PID value normal?	Yes	Overhaul control valve body and repair or replace any defective parts. (See ATX Workshop Manual [FS5A-EL].) If problem remains, overhaul transaxle and repair or replace any defective parts. (See ATX Workshop Manual [FS5A-EL].)
		No	Repair or replace any defective parts.
6	• Verify test results. — If okay, return to diagnostic index to service any additional symptoms. — If malfunction remains, inspect related Service Bulletins and/or On-line Repair Information and perform repair or diagnosis. • If vehicle repaired, troubleshooting completed. • If vehicle not repaired or additional diagnostic information not available, replace TCM.		

NO.21 NOISE OCCURS AT IDLE WHEN VEHICLE IS STOPPED IN D RANGE, OR IN R POSITION [FS5A-EL]

E6U050300000W61

21	Noise occurs at idle when vehicle is stopped in D range, or in R position
DESCRIPTION	• Transaxle noisy in driving ranges when vehicle idling.
POSSIBLE CAUSE	• Although the malfunction is basically the same as No.20 "NOISE OCCURS AT IDLE WHEN VEHICLE IS STOPPED IN ALL POSITIONS/RANGES", other causes may be selector lever position disparity or TR switch position disparity. **Note** • Before following troubleshooting steps, make sure that Automatic Transaxle On-Board Diagnostic and Automatic Transaxle Basic Inspection are conducted. (See 05–03A–4 BASIC INSPECTION [FS5A-EL].)

NO.22 NO ENGINE BRAKING IN 1GR POSITION OF M RANGE [FS5A-EL]

E6U050300000W62

22	No engine braking in 1GR position of M range
DESCRIPTION	• Engine speed drops to idle but vehicle coasts when accelerator pedal is released when in 1GR of M range at low vehicle speed.
POSSIBLE CAUSE	1. Clutch slippage, burned (low and reverse brake) • Line pressure low • Shift solenoid D malfunction • Shift solenoid E malfunction • Shift solenoid C malfunction • Pressure control solenoid B malfunction • Control valve body malfunction • Body GND malfunction 2. Signal malfunction • TP sensor malfunction • Accelerator pedal position sensor malfunction • Vehicle speed sensor malfunction • Sensor GND malfunction • Input/turbine speed sensor malfunction 3. M range switch ON not judged by TCM (short, or open circuit, poor operation) • M range switch signal malfunction **Note** • Before following troubleshooting steps, make sure that Automatic Transaxle On-Board Diagnostic and Automatic Transaxle Basic Inspection are conducted. (See 05–03A–4 BASIC INSPECTION [FS5A-EL].)

Diagnostic procedure

STEP	INSPECTION		ACTION
1	• Do the following symptoms concurrently occur? — Engine flares up or slips during acceleration. — Engine flares up or slips when shifting.	Yes	Go to symptom troubleshooting NO.14 "ENGINE FLARES UP OR SLIPS WHEN UPSHIFTING OR DOWNSHIFTING" or No.15 "ENGINE FLARES UP OR SLIPS WHEN ACCELERATING VEHICLE".
		No	Repeat basic inspection and repair or replace any defective parts according to inspection result. (See 05–03A–4 BASIC INSPECTION [FS5A-EL].)
2	• Verify test results. — If okay, return to diagnostic index to service any additional symptoms. — If malfunction remains, inspect related Service Bulletins and/or On-line Repair Information and perform repair or diagnosis. • If vehicle repaired, troubleshooting completed. • If vehicle not repaired or additional diagnostic information not available, replace TCM.		

NO.23 TRANSAXLE OVERHEATS [FS5A-EL]

E6U050300000W63

23	Transaxle overheats
DESCRIPTION	• Burnt smell emitted from transaxle. • Smoke emitted from transaxle.
POSSIBLE CAUSE	• The malfunction is restricted to hindrance of coolant at the oil cooler. In addition, overheating of the transaxle may be caused by a malfunction of the transaxle fluid temperature sensor. 1. Burned (TCC) • Line pressure low • Control valve body malfunction 2. Oil cooler malfunction (Foreign material mixed ATF) 3. Excessive amount of ATF 4. Torque converter malfunction **Note** • Before following troubleshooting steps, make sure that Automatic Transaxle On-Board Diagnostic and Automatic Transaxle Basic Inspection are conducted. (See 05–03A–4 BASIC INSPECTION [FS5A-EL].)

Diagnostic procedure

STEP	INSPECTION		ACTION
1	Inspect oil cooler pipes for bends, damage, corrosion or kinks. Are oil cooler pipes okay?	Yes	Go to the next step.
		No	Replace any defective parts.
2	Perform stall test. (See 05–17A–6 Stall Test.) Is stall speed okay?	Yes	Go to the next step.
		No	Repair or replace any defective parts.
3	Check value at the following PCM PIDs using WDS or equivalent. (See 01–40A–9 PCM INSPECTION [L3].) • APP • TP_REL Are PID values okay?	Yes	Go to the next step.
		No	Repair or replace any defective parts.
4	Disconnect TCM. Is resistance between TCM ground terminal 1P and body ground, and between TCM ground terminal 1O and body ground **less than 5.0 ohms**?	Yes	Go to the next step.
		No	Repair harness. Reconnect TCM.
5	Inspect Pressure control solenoid A. (See 05–17A–28 SOLENOID VALVE INSPECTION (PRIMARY CONTROL VALVE BODY) [FS5A-EL].) Is it okay?	Yes	Overhaul control valve body and repair or replace any defective parts. (See ATX Workshop Manual [FS5A-EL].) If problem remains, overhaul transaxle and repair or replace any defective parts. (See ATX Workshop Manual [FS5A-EL].)
		No	Repair or replace any defective parts.
6	• Verify test results. — If okay, return to diagnostic index to service any additional symptoms. — If malfunction remains, inspect related Service Bulletins and/or On-line Repair Information and perform repair or diagnosis. • If vehicle repaired, troubleshooting completed. • If vehicle not repaired or additional diagnostic information not available, replace TCM.		

NO.24 ENGINE STALLS WHEN SHIFTED TO D RANGE, OR IN R POSITION [FS5A-EL]

E6U050300000W64

24	Engine stalls when shifted to D range, or in R position
DESCRIPTION	• Engine stalls when shifting from N or P position to D range or R position at idle.
POSSIBLE CAUSE	• The malfunction is on the engine control side (i.e. Electronic throttle control system). Otherwise, the malfunction is in the input/turbine speed sensor (engine sometimes starts) or TCC circuit (engine always stalls).

Diagnostic procedure

STEP	INSPECTION		ACTION
1	Go to symptom troubleshooting No.10 "LOW IDLE/STALLS DURING DECELERATION". (See 01–03A–34 NO.10 LOW IDLE/STALLS DURING DECELERATION [L3].) Is engine control system okay?	Yes	Repeat basic inspection and repair or replace any defective parts according to inspection result. (See 05–03A–4 BASIC INSPECTION [FS5A-EL].)
		No	Repair or replace any defective parts according to inspection results.
2	• Verify test results. — If okay, return to diagnostic index to service any additional symptoms. — If malfunction remains, inspect related Service Bulletins and/or On-line Repair Information and perform repair or diagnosis. • If vehicle repaired, troubleshooting completed. • If vehicle not repaired or additional diagnostic information not available, replace TCM.		

05–03A

NO.25 ENGINE STALLS WHEN DRIVING AT SLOW SPEEDS OR STOPPING [FS5A-EL]

E6U050300000W65

25	Engine stalls when driving at slow speeds or stopping
DESCRIPTION	• Engine stalls when brake pedal is depressed while driving at low speed or stopping.
POSSIBLE CAUSE	• The malfunction on engine control side (e.g. Fuel injection control, Electronic throttle control system) Otherwise, the malfunction is in the control valve body, shift solenoid E or TCC.

Diagnostic procedure

STEP	INSPECTION		ACTION
1	Go to symptom troubleshooting No.10 "LOW IDLE/STALLS DURING DECELERATION". (See 01–03A–34 NO.10 LOW IDLE/STALLS DURING DECELERATION [L3].) Does engine control system okay?	Yes	Go to the next step.
		No	Repair or replace any defective parts according to inspection results.
2	Go to symptom troubleshooting No.5 "ENGINE STALLS-AFTER START/AT IDLE". (See 01–03A–21 NO.5 ENGINE STALLS-AFTER START/AT IDLE [L3].) Is engine control system okay?	Yes	Repeat basic inspection and repair or replace any defective parts according to inspection result. (See 05–03A–4 BASIC INSPECTION [FS5A-EL].)
		No	Repair or replace any defective parts according to inspection results.
3	• Verify test results. — If okay, return to diagnostic index to service any additional symptoms. — If malfunction remains, inspect related Service Bulletins and/or On-line Repair Information and perform repair or diagnosis. • If vehicle repaired, troubleshooting completed. • If vehicle not repaired or additional diagnostic information not available, replace TCM.		

NO.26 STARTER DOES NOT WORK [FS5A-EL]

E6U050300000W66

26	Starter does not work
DESCRIPTION	• Starter does not work even when in P or N position.
POSSIBLE CAUSE	• Selector lever misadjustment • TR switch misadjustment • Open or short circuit in TR switch

NO.27 GEAR POSITION INDICATOR LIGHT DOES NOT ILLUMINATE IN M RANGE [FS5A-EL]

E6U050300000W67

27	Gear position indicator light does not illuminate in M range
DESCRIPTION	• Gear position indicator light in instrument cluster illuminates in M range and ignition switch at ON.
POSSIBLE CAUSE	• M range switch, gear position indicator light or related wiring harness malfunction **Note** • Before following troubleshooting steps, make sure that Automatic Transaxle On-Board Diagnostic and Automatic Transaxle Basic Inspection are conducted. (See 05–03A–4 BASIC INSPECTION [FS5A-EL].)

Diagnostic procedure

STEP	INSPECTION		ACTION
1	Are other indicator lights illuminated with ignition switch at ON?	Yes	Go to the next step.
		No	Inspect meter fuse.
2	Inspect voltage at TCM terminal 2B. (See 05–17A–33 TCM INSPECTION [FS5A-EL].) Is voltage okay?	Yes	Inspect instrument cluster.
		No	Repair or replace any defective part.
3	• Verify test results. — If okay, return to diagnostic index to service any additional symptoms. — If malfunction remains, inspect related Service Bulletins and/or On-line Repair Information and perform repair or diagnosis. • If vehicle repaired, troubleshooting completed. • If vehicle not repaired or additional diagnostic information not available, replace TCM.		

NO.28 GEAR POSITION INDICATOR LIGHT ILLUMINATES IN D RANGE OR P, N, R POSITIONS [FS5A-EL]

E6U050300000W68

28	Gear position indicator light illuminates when in D range or P, N, R positions
DESCRIPTION	• Gear position indicator light in instrument cluster illuminates in D range or P, N, R position and ignition switch at ON.
POSSIBLE CAUSE	• M range switch or related wiring harness malfunction **Note** • Before following troubleshooting steps, make sure that Automatic Transaxle On-Board Diagnostic and Automatic Transaxle Basic Inspection are conducted. (See 05–03A–4 BASIC INSPECTION [FS5A-EL].)

Diagnostic procedure

STEP	INSPECTION		ACTION
1	Inspect voltage at TCM terminal 2B. (See 05–17A–33 TCM INSPECTION [FS5A-EL].) Is voltage okay?	Yes	Inspect instrument cluster.
		No	Repair or replace any defective part.
2	• Verify test results. — If okay, return to diagnostic index to service any additional symptoms. — If malfunction remains, inspect related Service Bulletins and/or On-line Repair Information and perform repair or diagnosis. • If vehicle repaired, troubleshooting completed. • If vehicle not repaired or additional diagnostic information not available, replace TCM.		

NO.29 DOES NOT SHIFT UP IN M RANGE [FS5A-EL]

E6U050300000W69

29	No shift up in M range
DESCRIPTION	• Gear position indicator light in dashboard illuminates, but vehicle does not upshift when selector lever is pushed to "+" side.
POSSIBLE CAUSE	• Up switch or related harness malfunction **Note** • Before following troubleshooting steps, make sure that Automatic Transaxle On-Board Diagnostic and Automatic Transaxle Basic Inspection are conducted. (See 05–03A–4 BASIC INSPECTION [FS5A-EL].)

Diagnostic procedure

STEP	INSPECTION		ACTION
1	Inspect UP SW PID value using the WDS or equivalent. (See 05–17A–33 TCM INSPECTION [FS5A-EL].) Is the UP SW PID value normal?	Yes	Inspect the instrument cluster.
		No	Inspect the up switch. • If the up switch is normal, inspect for continuity between the up switch and TCM terminal 2D.
2	• Verify test results. — If normal, return to the diagnostic index to service any additional symptoms. — If the malfunction remains, inspect the Service Bulletins and/or On-line Repair Information and perform repair or diagnosis. • If the vehicle repaired, troubleshooting completed. • If the vehicle not repaired or additional diagnostic information not available, replace TCM.		

NO.30 DOES NOT SHIFT DOWN IN M RANGE [FS5A-EL]

E6U050300000W70

30	No shift up in M range
DESCRIPTION	• Gear position indicator light in dashboard illuminates, but vehicle does not downshift when selector lever is pushed to "–" side.
POSSIBLE CAUSE	• Down switch or related harness malfunction **Note** • Before following troubleshooting steps, make sure that Automatic Transaxle On-Board Diagnostic and Automatic Transaxle Basic Inspection are conducted. (See 05–03A–4 BASIC INSPECTION [FS5A-EL].)

Diagnostic procedure

STEP	INSPECTION		ACTION
1	Inspect DWN SW PID value using the WDS or equivalent. (See 05–17A–33 TCM INSPECTION [FS5A-EL].) Is the DWN SW PID value normal?	Yes	Inspect the instrument cluster.
		No	Inspect the up switch. • If the up switch is normal, inspect for continuity between the up switch and TCM terminal 2F.
2	• Verify test results. — If normal, return to the diagnostic index to service any additional symptoms. — If the malfunction remains, inspect the Service Bulletins and/or On-line Repair Information and perform repair or diagnosis. • If the vehicle repaired, troubleshooting completed. • If the vehicle not repaired or additional diagnostic information not available, replace TCM.		

05–03B SYMPTOM TROUBLESHOOTING [AW6A-EL]

AUTOMATIC TRANSAXLE CONTROL YSTEM WIRING DIAGRAM ¿AW6A-EL]. 05–03B–2
FOREWORD [AW6A-EL] 05–03B–3
BASIC INSPECTION [AW6A-EL] 05–03B–4
SYMPTOM TROUBLESHOOTING ITEM TABLE [AW6A-EL] 05–03B–4
QUICK DIAGNOSIS CHART [AW6A-EL] 05–03B–7
NO.1 VEHICLE DOES NOT MOVE IN D RANGE, OR IN R POSITION [AW6A-EL]. 05–03B–11
NO.2 VEHICLE MOVES IN N POSITION [AW6A-EL]. 05–03B–12
NO.3 VEHICLE MOVES IN P POSITION, OR PARKING GEAR DOES NOT DISENGAGE WHEN P IS DISENGAGED [AW6A-EL] 05–03B–12
NO.4 EXCESSIVE CREEP [AW6A-EL]. . 05–03B–12
NO.5 NO CREEP AT ALL [AW6A-EL] . . 05–03B–13
NO.6 LOW MAXIMUM SPEED AND POOR ACCELERATION [AW6A-EL] . . 05–03B–14
NO.7 NO SHIFTING [AW6A-EL]. 05–03B–15
NO.8 DOES NOT SHIFT TO 6GR [AW6A-EL]. 05–03B–15
NO.9 ABNORMAL SHIFTING [AW6A-EL]. 05–03B–17
NO.10 FREQUENT SHIFTING [AW6A-EL]. 05–03B–18
NO.11 SHIFT POINT IS HIGH OR LOW \W6A-EL]. 05–03B–18
..O.12 TORQUE CONVERTER CLUTCH (TCC) NON-OPERATION [AW6A-EL] . 05–03B–18
NO.13 NO KICKDOWN [AW6A-EL] 05–03B–20
NO.14 ENGINE FLARES UP OR SLIPS WHEN UPSHIFTING OR DOWNSHIFTING [AW6A-EL] 05–03B–20
NO.15 ENGINE FLARES UP OR SLIPS WHEN ACCELERATING VEHICLE [AW6A-EL]. 05–03B–21
NO.16 JUDDER UPON TORQUE CONVERTER CLUTCH (TCC) OPERATION [AW6A-EL] 05–03B–21
NO.17 EXCESSIVE SHIFT SHOCK FROM N TO D OR N TO R POSITION/RANGE [AW6A-EL] 05–03B–21
Initial Learning. 05–03B–23
NO.18 EXCESSIVE SHIFT SHOCK IS GIVEN WHEN UPSHIFTING AND DOWNSHIFTING [AW6A-EL]. 05–03B–23
NO.19 EXCESSIVE SHIFT SHOCK ON TORQUE CONVERTER CLUTCH (TCC) [AW6A-EL]. 05–03B–24
NO.20 NOISE OCCURS AT IDLE WHEN VEHICLE IS STOPPED IN ALL POSITIONS/RANGES [AW6A-EL]. 05–03B–24
NO.21 NOISE OCCURS AT IDLE WHEN VEHICLE IS STOPPED IN D RANGE, OR IN R POSITION [AW6A-EL]. 05–03B–25
NO.22 NO ENGINE BRAKING IN 1GR POSITION OF M RANGE [AW6A-EL] 05–03B–25
NO.23 TRANSAXLE OVERHEATS [AW6A-EL] 05–03B–26
NO.24 ENGINE STALLS WHEN SHIFTED TO D RANGE, OR IN R POSITION [AW6A-EL] 05–03B–27
NO.25 ENGINE STALLS WHEN DRIVING AT SLOW SPEED OR STOPPING [AW6A-EL] 05–03B–27
NO.26 STARTER DOES NOT WORK [AW6A-EL] 05–03B–28
NO.27 GEAR POSITION INDICATOR LIGHT DOES NOT ILLUMINATE IN M RANGE [AW6A-EL] 05–03B–28
NO.28 GEAR POSITION INDICATOR LIGHT ILLUMINATES IN D RANGE OR P, N, R POSITIONS [AW6A-EL]. . . . 05–03B–29
NO.29 DOES NOT UPSHIFT IN M RANGE [AW6A-EL] 05–03B–29
NO.30 DOES NOT DOWNSHIFT IN M RANGE [AW6A-EL] 05–03B–29

AUTOMATIC TRANSAXLE CONTROL SYSTEM WIRING DIAGRAM [AW6A-EL]

E6U050300000W01

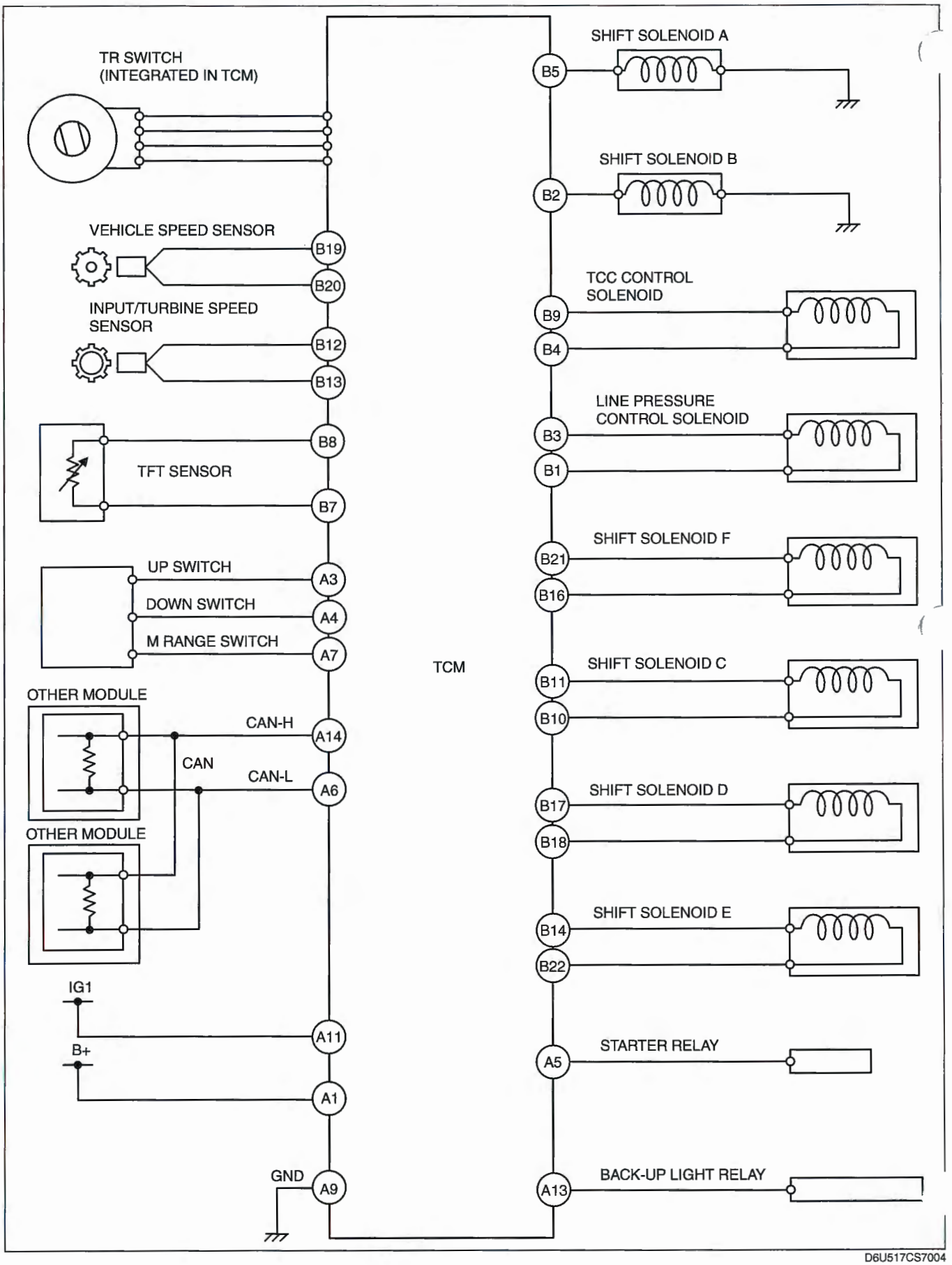

D6U517CS7004

FOREWORD [AW6A-EL]

E6U050300000W02

- When the customer reports a vehicle malfunction, inspect the malfunction indicator lamp (MIL) indication, AT warning indicator light flash, and diagnostic trouble code (DTC), then diagnose the malfunction according to following flowchart.
  - — If a DTC exists, diagnose the applicable DTC inspection. (See 05–02B–5 DTC TABLE [AW6A-EL].)
  - — If a DTC does not exist, the MIL does not illuminate and the AT warning indicator light illuminate, diagnose the applicable symptom troubleshooting. (See 05–03B–4 SYMPTOM TROUBLESHOOTING ITEM TABLE [AW6A-EL].)

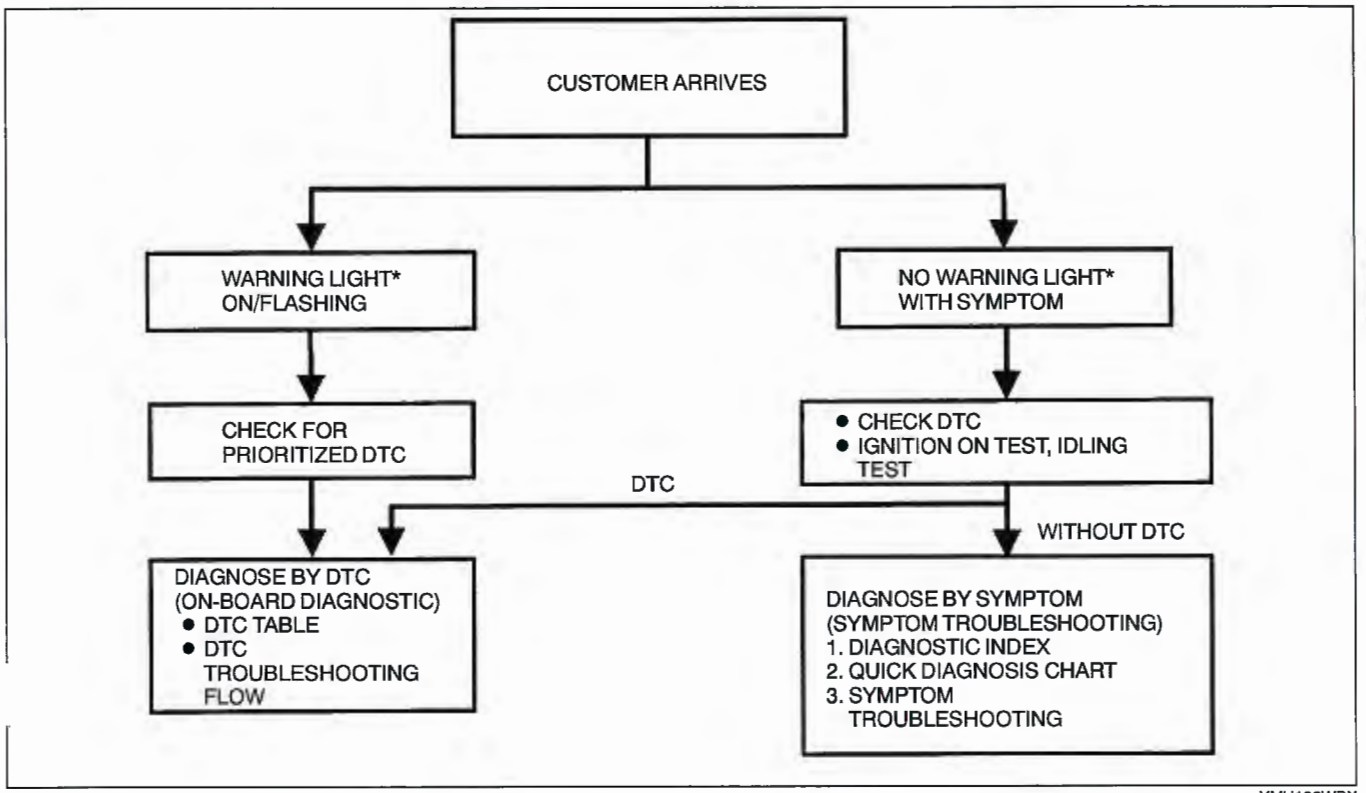

YMU102WBX

*: Malfunction Indicator Lamp (MIL), AT warning light.

BASIC INSPECTION [AW6A-EL]

E6U050300000W03

STEP	INSPECTION		ACTION
1	• Measure the battery voltage. • Is the battery voltage **10.0—14.0 V**?	Yes	Go to the next step.
		No	Replace or recharge the battery. (See 01–17A–3 BATTERY RECHARGING [L3, AJ].)
2	• Inspect the TCM related harnesses, connectors and fuses. • Are they normal?	Yes	Go to the next step.
		No	Repair or replace any malfunctioning parts according to the inspection result.
3	• Warm up the engine to normal operating temperature. • Retrieve DTC using the WDS or equivalent. • Is there any DTC present?	Yes	Record Freeze Frame Data and perform appropriate DTC troubleshooting procedures.
		No	Go to the next step.
4	• Perform the road test. • Is the ATX operating normally?	Yes	Go to the next step.
		No	Repair or replace any malfunctioning parts according to the inspection result.
5	• Perform the time lag test. • Is the ATX operating normally?	Yes	Go to the next step.
		No	Repair or replace any malfunctioning parts according to the inspection result.
6	• Perform the stall test. • Is the stall speed within the specified?	Yes	Go to the next step.
		No	Repair or replace any malfunctioning parts according to the inspection result.
7	• Perform the line pressure test. • Is the line pressure within the specified?	Yes	Perform the symptom troubleshooting and follow the procedures.
		No	Repair or replace any malfunctioning parts according to the inspection result.
8	• Inspect following part or signal related PIDs using the WDS or equivalent. — TP sensor — TSS — VSS — TFT sensor — TR switch — M range switch — Up switch — Down switch — Brake switch — Engine speed • Are they normal?	Yes	Perform the symptom troubleshooting and follow the procedures.
		No	Repair or replace any malfunctioning parts according to the inspection result.

SYMPTOM TROUBLESHOOTING ITEM TABLE [AW6A-EL]

E6U050300000W04

• Use the chart below to verify the symptoms of the trouble in order to diagnose the appropriate area.

No.	TROUBLESHOOTING ITEM	DESCRIPTION	PAGE
1	• Vehicle does not move in D range, or in R position	• Vehicle does not move when accelerator pedal is depressed.	(See 05–03B–11 NO.1 VEHICLE DOES NOT MOVE IN D RANGE, OR IN R POSITION [AW6A-EL].)
2	• Vehicle moves in N position	• Vehicle creeps in N position. • Vehicle creeps if brake pedal is not depressed in N position.	(See 05–03B–12 NO.2 VEHICLE MOVES IN N POSITION [AW6A-EL].)
3	• Vehicle moves in P position, or parking gear does not disengage when P position is disengaged	• Vehicle rolls when on a downward slope and tires do not lock in P position. • Tires locked when P position is disengaged, vehicle does not move in D range, and R position when accelerator pedal is depressed, and engine remains in stalled condition.	(See 05–03B–12 NO.3 VEHICLE MOVES IN P POSITION, OR PARKING GEAR DOES NOT DISENGAGE WHEN P IS DISENGAGED [AW6A-EL].)
4	• Excessive creep	• Vehicle accelerates in D range, and R position when accelerator pedal is not depressed.	(See 05–03B–12 NO.4 EXCESSIVE CREEP [AW6A-EL].)
5	• No creep at all	• Vehicle does not move in D range, or R position when idling on flat paved road.	(See 05–03B–13 NO.5 NO CREEP AT ALL [AW6A-EL].)

No.	TROUBLESHOOTING ITEM	DESCRIPTION	PAGE
6	• Low maximum speed and poor acceleration	• Vehicle acceleration is poor at start. • Delayed acceleration when accelerator pedal is depressed while driving.	(See 05–03B–14 NO.6 LOW MAXIMUM SPEED AND POOR ACCELERATION [AW6A-EL].)
7	• No shifting	• Single shift range only. • Sometimes shifts correctly.	(See 05–03B–15 NO.7 NO SHIFTING [AW6A-EL].)
8	• Does not shift to 6GR	• Vehicle does not upshift from 5GR to 6GR even though vehicle speed increased. • Vehicle does not shift to 6GR even though accelerator pedal is released in D range at **80 km/h {50 mph}**.	(See 05–03B–15 NO.8 DOES NOT SHIFT TO 6GR [AW6A-EL].)
9	• Abnormal shifting	• Shifts incorrectly (incorrect shift pattern).	(See 05–03B–17 NO.9 ABNORMAL SHIFTING [AW6A-EL].)
10	• Frequent shifting	• Downshifting occurs suddenly even when accelerator pedal is depressed slightly in D range.	(See 05–03B–18 NO.10 FREQUENT SHIFTING [AW6A-EL].)
11	• Shift point is high or low	• Shift point considerably different from automatic shift diagram. • Shift delays when accelerating. • Shift occurs suddenly when accelerating and engine speed does not increase.	(See 05–03B–18 NO.11 SHIFT POINT IS HIGH OR LOW [AW6A-EL].)
12	• Torque converter clutch (TCC) non-operation	• TCC does not operate when vehicle reaches TCC operation range.	(See 05–03B–18 NO.12 TORQUE CONVERTER CLUTCH (TCC) NON-OPERATION [AW6A-EL].)
13	• No kickdown	• Does not downshift when accelerator pedal is fully depressed within kickdown range.	(See 05–03B–20 NO.13 NO KICKDOWN [AW6A-EL].)
14	• Engine flares up or slips when upshifting or downshifting	• When accelerator pedal is depressed, engine speed increases normally but vehicle speed increases slowly. • When accelerator pedal is depressed while driving, engine speed increases but vehicle speed does not increase.	(See 05–03B–20 NO.14 ENGINE FLARES UP OR SLIPS WHEN UPSHIFTING OR DOWNSHIFTING [AW6A-EL].)
15	• Engine flares up or slips when accelerating vehicle	• Engine flares up when accelerator pedal is depressed for upshifting. • Engine flares up suddenly when accelerator pedal is depressed for downshifting.	(See 05–03B–21 NO.15 ENGINE FLARES UP OR SLIPS WHEN ACCELERATING VEHICLE [AW6A-EL].)
16	• Judder upon torque converter clutch (TCC) operation	• Vehicle jolts when TCC is engaged.	(See 05–03B–21 NO.16 JUDDER UPON TORQUE CONVERTER CLUTCH (TCC) OPERATION [AW6A-EL].)
17	• Excessive shift shock from N to D or N to R position/range	• Strong shock is felt when shifting from N to D or N to R position/range at idle.	(See 05–03B–21 NO.17 EXCESSIVE SHIFT SHOCK FROM N TO D OR N TO R POSITION/RANGE [AW6A-EL].)
18	• Excessive shift shock is given when upshifting and downshifting	• Excessive shift shock is felt when depressing accelerator pedal to accelerate at upshifting. • During cruising, excessive shift shock is felt when depressing accelerator pedal at downshifting.	(See 05–03B–23 NO.18 EXCESSIVE SHIFT SHOCK IS GIVEN WHEN UPSHIFTING AND DOWNSHIFTING [AW6A-EL].)
19	• Excessive shift shock on torque converter clutch (TCC)	• Strong shock is felt when TCC is engaged.	(See 05–03B–24 NO.19 EXCESSIVE SHIFT SHOCK ON TORQUE CONVERTER CLUTCH (TCC) [AW6A-EL].)

No.	TROUBLESHOOTING ITEM	DESCRIPTION	PAGE
20	• Noise occurs at idle when vehicle is stopped in all positions/ranges	• Transaxle is noisy in all positions and ranges when vehicle is idling.	(See 05–03B–24 NO.20 NOISE OCCURS AT IDLE WHEN VEHICLE IS STOPPE' IN ALL POSITIONS/RANGES [AW6A-EL].)
21	• Noise occurs at idle when vehicle is stopped in D range, or in R position	• Transaxle is noisy in driving ranges when vehicle is idling.	(See 05–03B–25 NO.21 NOISE OCCURS AT IDLE WHEN VEHICLE IS STOPPED IN D RANGE, OR IN R POSITION [AW6A-EL].)
22	• No engine braking in 1GR position of M range	• Engine speed drops to idle but vehicle coasts when accelerator pedal is released during cruising at medium to high speeds. • Engine speed drops to idle but vehicle coasts when accelerator pedal is released when in M range (1GR) at low vehicle speed.	(See 05–03B–25 NO.22 NO ENGINE BRAKING IN 1GR POSITION OF M RANGE [AW6A-EL].)
23	• Transaxle overheats	• Burnt smell emitted from the transaxle. • Smoke is emitted from the transaxle.	(See 05–03B–26 NO.23 TRANSAXLE OVERHEATS [AW6A-EL].)
24	• Engine stalls when shifted to D range, or in R position	• Engine stalls when shifting from N or P position to D range or R position at idle.	(See 05–03B–27 NO.24 ENGINE STALLS WHEN SHIFTED TO D RANGE, OR IN R POSITION [AW6A-EL].)
25	• Engine stalls when driving at slow speeds or stopping	• Engine stalls when brake pedal is depressed while driving at low speed or stopping.	(See 05–03B–27 NO.25 ENGINE STALLS WHEN DRIVING AT SLOW SPEED OR STOPPING [AW6A-EL].)
26	• Starter does not work	• Starter does not work even when P or N position is selected.	(See 05–03B–28 NO.26 STARTER DOES NOT WORK [AW6A-EL].)
27	• Gear position indicator light does not illuminate in M range	• Gear position indicator light in instrument cluster does not illuminate in M range with ignition switch at ON.	(See 05–03B–28 NO.27 GEAR POSITION INDICATOR LIGHT DOES NOT ILLUMINATE IN M RANGE [AW6A-EL].)
28	• Gear position indicator light illuminates in D range or P, N, R positions	• Gear position indicator light in instrument cluster illuminates in D range or P, N R positions with ignition switch at ON.	(See 05–03B–29 NO.28 GEAR POSITION INDICATOR LIGHT ILLUMINATES IN D RANGE OR P, N, R POSITIONS [AW6A-EL].)
29	• Does not upshift in M range	• Gear position indicator light in instrument cluster illuminates but vehicle does not upshift when selector lever is pushed to "+" side.	(See 05–03B–29 NO.29 DOES NOT UPSHIFT IN M RANGE [AW6A-EL].)
30	• Does not downshift in M range	• Gear position indicator light in instrument cluster illuminates but vehicle does not downshift when selector lever is pushed to "–" side.	(See 05–03B–29 NO.30 DOES NOT DOWNSHIFT IN M RANGE [AW6A-EL].)

QUICK DIAGNOSIS CHART [AW6A-EL]

E6U050300000W05

	Symptom item / Cause of trouble	Selector lever is mis-adjisted	Not within line pressure specification	Not within Idle speed specification	Not within ignition timing specification	TR switch initial learning: N potition learning is not performed	TR switch initial learning: Garage shift learning is not performed	Parking mechanism not operating properly	Not within ATF amount	Electrical system components: CAN signal: Open/short	CAN signal: Engine speed (from PCM)	CAN signal: Throttle opening (from PCM)	CAN signal: Shift potition (to instrument cluster)	ATX outer parts: Open/short	ATX outer parts: TCM power supply/GND	TR switch: No signal input	TR switch: Abnormal signal input	M range switch: No signal input	M range switch: Abnormal signal input	Up switch: No signal input	Up switch: Abnormal signal input
1	Vehicle does not move in D range, or in R position	X	X			X		X							X						
2	Vehicle moves in N position	X	X			X															
3	Vehicle moves in P position, or parking gear does not disengage when P is disengaged	X						X													
4	Excessive creep			X	X																
5	No creep at all		X																		
6	Low maximum speed and poor acceleration		X		X										X						
7	No shifting		X								X		X								
8	Does not shift to 6GR	X												X	X	X	X				
9	Abnormal shifting		X								X		X					X			
10	Frequent shifting		X								X		X					X			
11	Shift point is high or low										X										
12	Torque converter clutch (TCC) non-operation		X								X										
13	No kickdown										X										
14	Engine flares up or slips when upshifting or downshifting		X								X		X								
15	Engine flares up or slips when accelerating vehicle		X								X		X								
16	Judder upon torque converter clutch (TCC) operation		X								X		X								
17	Excessive shift shock from N to D or N to R position/range		X	X			X				X										
18	Excessive shift shock is given when upshifting and downshifting		X		X						X		X								
19	Excessive shift shock on torque converter clutch (TCC)		X		X						X		X								
20	Noise occurs at idle when vehicle is stopped in all positions/ranges		X	X			X														
21	Noise occurs at idle when vehicle is stopped in D range, or in R position		X						X												
22	No engine braking in 1GR position of M range		X										X								
23	Transaxle overheats		X						X		X										
24	Engine stalls when shifted to D range, or in R position				X																
25	Engine stalls when driving at slow speeds or stopping																				
26	Starter does not work	X				X											X				
27	Gear position indicator light does not illuminate in M range												X					X	X		
28	Gear position indicator light illuminates in D range or P, N, R positions												X						X		
29	Does not upshift in M range																	X		X	X
30	Does not downshift in M range																	X			

D6U503CW7001

	Symptom item / Cause of trouble	Down switch: No signal input	Down switch: Abnormal signal input	VSS: No signal input	VSS: Abnormal signal input	Input/turbine speed sensor: No signal input	Input/turbine speed sensor: Abnormal signal input	TFT sensor: Open/short	TFT sensor: Malfunction signal input	Starter lock relay: Open/short	Shift solenoid A: Open/short	Shift solenoid B: Open/short	TCC control solenoid: Open/short	Line pressure control solenoid: Open/short	Shift solenoid F: Open/short	Shift solenoid C: Open/short	Shift solenoid D: Open/short	Shift solenoid E: Open/short
1	Vehicle does not move in D range, or in R position															X	X	X
2	Vehicle moves in N position													X		X		X
3	Vehicle moves in P position, or parking gear does not disengage when P is disengaged																	
4	Excessive creep																	
5	No creep at all			X		X		X			X	X	X	X	X	X	X	X
6	Low maximum speed and poor acceleration			X	X	X	X	X			X	X	X	X	X	X	X	X
7	No shifting			X	X	X	X	X			X	X	X	X	X	X	X	X
8	Does not shift to 6GR							X	X				X					
9	Abnormal shifting			X	X	X	X						X	X	X	X	X	X
10	Frequent shifting			X	X	X	X						X	X	X	X	X	X
11	Shift point is high or low				X		X											
12	Torque converter clutch (TCC) non-operation				X		X						X					
13	No kickdown																	
14	Engine flares up or slips when upshifting or downshifting			X	X	X	X						X	X	X	X	X	X
15	Engine flares up or slips when accelerating vehicle			X	X	X	X						X	X	X	X	X	X
16	Judder upon torque converter clutch (TCC) operation			X	X	X	X						X					
17	Excessive shift shock from N to D or N to R position/range							X	X					X		X		X
18	Excessive shift shock is given when upshifting and downshifting			X	X	X	X	X	X				X	X	X	X	X	X
19	Excessive shift shock on torque converter clutch (TCC)			X	X	X	X						X					
20	Noise occurs at idle when vehicle is stopped in all positions/ranges												X	X				
21	Noise occurs at idle when vehicle is stopped in D range, or in R position																	
22	No engine braking in 1GR position of M range			X	X	X	X				X	X						
23	Transaxle overheats								X									
24	Engine stalls when shifted to D range, or in R position						X						X					
25	Engine stalls when driving at slow speeds or stopping						X						X					
26	Starter does not work									X								
27	Gear position indicator light does not illuminate in M range																	
28	Gear position indicator light illuminates in D range or P, N, R positions																	
29	Does not upshift in M range																	
30	Does not downshift in M range	X	X															

Electrical system components

ATX outer parts: Down switch, VSS, Input/turbine speed sensor, TFT sensor, Starter lock relay

ATX inner parts: Shift solenoid A, Shift solenoid B, TCC control solenoid, Line pressure control solenoid, Shift solenoid F, Shift solenoid C, Shift solenoid D, Shift solenoid E

D6U503CW7

	Symptom item / Cause of trouble	Valve body spool is not operating properly	C1 accumulator is not operating properly	C2 accumulator is not operating properly	C3 accumulator is not operating properly	B1 accumulator is not operating properly	B2 accumulator is not operating properly	Centrifugal hydraulic pressure clutch is not operating properly	Clogging	Shift solenoid A hydraulic circuit	Clogging	Shift solenoid B hydraulic circuit	Clogging	TCC control solenoid hydraulic circuit	Clogging	Line pressure control solenoid hydraulic circuit	Clogging	Shift solenoid F hydraulic circuit	Clogging	Shift solenoid C hydraulic circuit	Clogging	Shift solenoid D hydraulic circuit	Clogging	Shift solenoid E hydraulic circuit	ATF cooler is not operating properly
		Hydraulic system components																							
		Control valve body																							
1	Vehicle does not move in D range, or in R position		X	X	X	X	X											X	X	X					
2	Vehicle moves in N position		X		X										X			X		X					
3	Vehicle moves in P position, or parking gear does not disengage when P is disengaged																								
4	Excessive creep																								
5	No creep at all	X	X		X	X									X	X	X	X	X	X					
6	Low maximum speed and poor acceleration	X	X	X	X	X									X	X	X	X	X	X					
7	No shifting	X	X	X	X	X									X	X	X	X	X	X					
8	Does not shift to 6GR	X												X	X										
9	Abnormal shifting	X	X	X	X	X								X	X	X	X	X	X	X					
10	Frequent shifting	X	X	X	X	X								X	X	X	X	X	X	X					
11	Shift point is high or low																								
12	Torque converter clutch (TCC) non-operation													X											
13	No kickdown																								
14	Engine flares up or slips when upshifting or downshifting	X	X	X	X	X								X	X	X	X	X	X	X					
15	Engine flares up or slips when accelerating vehicle	X	X	X	X	X								X	X	X	X	X	X	X					
16	Judder upon torque converter clutch (TCC) operation	X						X						X											
17	Excessive shift shock from N to D or N to R position/range	X	X		X												X	X		X					
18	Excessive shift shock is given when upshifting and downshifting	X	X	X	X	X								X	X	X	X	X	X						
19	Excessive shift shock on torque converter clutch (TCC)	X						X						X											
20	Noise occurs at idle when vehicle is stopped in all positions/ranges																								
21	Noise occurs at idle when vehicle is stopped in D range, or in R position																								
22	No engine braking in 1GR position of M range	X					X		X	X															
23	Transaxle overheats																								X
24	Engine stalls when shifted to D range, or in R position													X											
25	Engine stalls when driving at slow speeds or stopping													X											
26	Starter does not work																								
27	Gear position indicator light does not illuminate in M range																								
28	Gear position indicator light illuminates in D range or P, N, R positions																								
29	Does not upshift in M range																								
30	Does not downshift in M range																								

D6U503CW7003

	Symptom item / Cause of trouble	Slipping (clutch, brake)	Burnt (clutch, brake)	One-way clutch is not operated properly	Torque converter is not operating properly	TCC is cracking or peeling	TCC is not operating properly
		Powertrain					
1	Vehicle does not move in D range, or in R position	X	X	X	X		
2	Vehicle moves in N position		X				
3	Vehicle moves in P position, or parking gear does not disengage when P is disengaged						
4	Excessive creep						
5	No creep at all		X		X		
6	Low maximum speed and poor acceleration	X	X				
7	No shifting		X				
8	Does not shift to 6GR	X	X		X		X
9	Abnormal shifting						
10	Frequent shifting						
11	Shift point is high or low						
12	Torque converter clutch (TCC) non-operation						
13	No kickdown						
14	Engine flares up or slips when upshifting or downshifting	X	X				
15	Engine flares up or slips when accelerating vehicle	X	X				
16	Judder upon torque converter clutch (TCC) operation	X	X		X	X	X
17	Excessive shift shock from N to D or N to R position/range	X	X				
18	Excessive shift shock is given when upshifting and downshifting	X	X				
19	Excessive shift shock on torque converter clutch (TCC)	X	X		X	X	X
20	Noise occurs at idle when vehicle is stopped in all positions/ranges						
21	Noise occurs at idle when vehicle is stopped in D range, or in R position						
22	No engine braking in 1GR position of M range	X	X				
23	Transaxle overheats						
24	Engine stalls when shifted to D range, or in R position						X
25	Engine stalls when driving at slow speeds or stopping						X
26	Starter does not work						
27	Gear position indicator light does not illuminate in M range						
28	Gear position indicator light illuminates in D range or P, N, R positions						
29	Does not upshift in M range						
30	Does not downshift in M range						

D6U503CW7004

NO.1 VEHICLE DOES NOT MOVE IN D RANGE, OR IN R POSITION [AW6A-EL]

E6U050300000W06

1	Vehicle does not move in D range, or in R position
DESCRIPTION	• Vehicle does not move when accelerator pedal is depressed.
POSSIBLE CAUSE	• If the vehicle does not move in D range or R position, basically, the malfunction is in the ATX. (Vehicle will move even with a malfunction in the TCM.) Since a malfunction is in the sensor circuit or output circuit is the cause of the malfunction in the ATX, inspect the sensors, output circuit, and the related wiring harnesses. — Clutch slippage, worn (D range-C1 clutch, One-way clutch, R position-C3 clutch, B2 brake) • Line pressure low • Shift solenoid C malfunction • Shift solenoid D malfunction • Shift solenoid E malfunction • Line pressure control solenoid malfunction • Shift solenoid F malfunction • Sensor GND malfunction • Body GND malfunction • Control valve body malfunction — Selector lever malfunction — Parking mechanism not operating properly — Torque converter malfunction — N position learning is not performed **Note** • Before following the troubleshooting steps, make sure that the Automatic Transaxle On-Board Diagnostic and Automatic Transaxle Basic Inspection are conducted. (See 05–03B–4 BASIC INSPECTION [AW6A-EL].)

05–03B

Diagnostic procedure

STEP	INSPECTION		ACTION
1	• When the vehicle is stopped on a flat, level road and the engine off, does the vehicle move when pushed? (in D range or N, R positions with the brake pedal released)	Yes	Go to the next step.
		No	Inspect for parking mechanism.
2	• Start the engine. • Does vehicle move when selector lever in between N position and D range?	Yes	Inspect or adjust selector lever. (See 05–18–6 SELECTOR LEVER INSPECTION.) (See 05–18–7 SELECTOR CABLE ADJUSTMENT.) Perform N position learning. (See 05–17B–28 Neutral Position Learning.)
		No	Go to the next step.
3	• Stop the engine. • Inspect following solenoid. (See 05–17B–20 SOLENOID VALVE INSPECTION [AW6A-EL].) — Shift solenoid C — Shift solenoid D — Shift solenoid E — Shift solenoid F — Line pressure control solenoid • Are these normal?	Yes	Replace the ATX (clutch slippage, worn) (See 05–17B–30 AUTOMATIC TRANSAXLE REMOVAL/ INSTALLATION [AW6A-EL].)
		No	Inspect the coupler component. If normal, replace the control valve body. (See 05–17B–39 CONTROL VALVE BODY REMOVAL/ INSTALLATION [AW6A-EL].)
4	• Verify test results. — If normal, return to the diagnostic index to service any additional symptoms. — If malfunction remains, inspect the related Service Bulletins and/or On-line Repair Information and perform repair or diagnosis. • If the vehicle is repaired, troubleshooting completed. • If the vehicle is not repaired or additional diagnostic information is not available, replace the TCM.		

NO.2 VEHICLE MOVES IN N POSITION [AW6A-EL]

E6U050300000W07

2	Vehicle moves in N position
DESCRIPTION	• Vehicle creeps in N position. • Vehicle creeps if brake pedal is not depressed in N position.
POSSIBLE CAUSE	• If the vehicle moves in N position, basically, the malfunction is in the ATX. Since a malfunction in the sensor circuit or output circuit is the cause of the malfunction in the ATX, inspect the sensors, output circuit, and the related wiring harnesses. — Clutch burnt (C1 clutch, C3 clutch, One-way clutch) • Line pressure low • Shift solenoid C malfunction • Shift solenoid E malfunction • Line pressure control solenoid malfunction • Control valve body malfunction — Selector lever position disparity (Although the selector indicator shows N position, the hydraulic circuit shows D range or R position) • N position learning is not performed **Note** • Before following the troubleshooting steps, make sure that the Automatic Transaxle On-Board Diagnostic and Automatic Transaxle Basic Inspection are conducted. (See 05–03B–4 BASIC INSPECTION [AW6A-EL].)

Diagnostic procedure

STEP	INSPECTION		ACTION
1	• Does the vehicle creep when selector lever is moved slightly in N position?	Yes	Go to the next step.
		No	Inspect and adjust the selector lever. (See 05–18–6 SELECTOR LEVER INSPECTION.) (See 05–18–7 SELECTOR CABLE ADJUSTMENT.) Perform N position learning. (See 05–17B–28 Neutral Position Learning.)
2	• Inspect following solenoid. (See 05–17B–20 SOLENOID VALVE INSPECTION [AW6A-EL].) — Shift solenoid C — Shift solenoid D • Are these solenoids normal?	Yes	Replace the ATX (clutch slippage, worm). (See 05–17B–30 AUTOMATIC TRANSAXLE REMOVAL/ INSTALLATION [AW6A-EL].)
		No	Inspect the coupler component. If normal, replace the control valve body. (See 05–17B–39 CONTROL VALVE BODY REMOVAL/ INSTALLATION [AW6A-EL].)
3	• Verify test results. — If normal, return to the diagnostic index to service any additional symptoms. — If malfunction remains, inspect the related Service Bulletins and/or On-line Repair Information and perform repair or diagnosis. • If the vehicle is repaired, troubleshooting completed. • If the vehicle is not repaired or additional diagnostic information is not available, replace the TCM.		

NO.3 VEHICLE MOVES IN P POSITION, OR PARKING GEAR DOES NOT DISENGAGE WHEN P IS DISENGAGED [AW6A-EL]

E6U050300000W08

3	Vehicle moves in P position, or parking gear does not disengage when P is disengaged
DESCRIPTION	• Vehicle rolls on a downward slope in P position. • Tires are locked when P is disengaged. Vehicle does not move in D range, and R position when the accelerator pedal is depressed, and the engine remains in a stalled condition.
POSSIBLE CAUSE	• Parking mechanism malfunction (May have effect on noise or shock from transaxle) • Improper adjustment of selector lever • If the vehicle moves in N position, perform No.2 "VEHICLE MOVES IN N POSITION"

NO.4 EXCESSIVE CREEP [AW6A-EL]

E6U050300000W09

4	Excessive creep
DESCRIPTION	• Vehicle accelerates in D range, and R position when accelerator pedal is not depressed.
POSSIBLE CAUSE	• Engine idle speed is high (transaxle system is not cause of problem) • Go to No.9 "FAST IDLE/RUNS ON" (See 01–03C–32 NO.9 FAST IDLE/RUNS ON [AJ].)

NO.5 NO CREEP AT ALL [AW6A-EL]

E6U050300000W10

5	No creep at all
DESCRIPTION	• Vehicle does not move in D range and R position when idling on a flat paved road.
POSSIBLE CAUSE	• Either engine output low or there is clutch slippage. — Clutch burnt (C1 clutch, C3 clutch) • Line pressure low • Shift solenoid C malfunction • Shift solenoid D malfunction • Shift solenoid E malfunction • Line pressure control solenoid malfunction • Shift solenoid F malfunction • Body GND malfunction • Control valve body malfunction — Transaxle fixed in 3GR or 5GR* (Operation of fail-safe function) • Short or open circuit in wiring harness • Poor connection of connector • Malfunction of electronic parts of output and input system — There is no engine torque • Torque converter malfunction **Note** • Before following the troubleshooting steps, make sure that the Automatic Transaxle On-Board Diagnostic and Automatic Transaxle Basic Inspection are conducted. (See 05–03B–4 BASIC INSPECTION [AW6A-EL].)

05–03B

Diagnostic procedure

STEP	INSPECTION		ACTION
1	• Does the vehicle creep in P and/or N position?	Yes	Inspect or adjust the selector lever. (See 05–18–6 SELECTOR LEVER INSPECTION.) (See 05–18–7 SELECTOR CABLE ADJUSTMENT.)
		No	Go to the next step.
2	• Stop the engine. • Inspect following solenoid. (See 05–17B–20 SOLENOID VALVE INSPECTION [AW6A-EL].) — Shift solenoid C — Shift solenoid D — Shift solenoid E — Shift solenoid F — Line pressure control solenoid • Are these solenoids normal?	Yes	Go to the next step.
		No	Inspect the coupler component. If normal, replace the control valve body. (See 05–17B–39 CONTROL VALVE BODY REMOVAL/INSTALLATION [AW6A-EL].)
3	• Remove the torque converter. (See 05–17B–46 TORQUE CONVERTER REMOVAL/INSTALLATION [AW6A-EL].) • Inspect the torque converter. • Is the torque converter normal?	Yes	Inspect the ATF condition. • If a large amount of metal specks are found, replace the transaxle. (See 05–17B–30 AUTOMATIC TRANSAXLE REMOVAL/INSTALLATION [AW6A-EL].) • If a large amount of metal specks are not found, replace the control valve body. (See 05–17B–39 CONTROL VALVE BODY REMOVAL/INSTALLATION [AW6A-EL].)
		No	Replace the torque converter.
4	• Verify test results. — If normal, return to the diagnostic index to service any additional symptoms. — If malfunction remains, inspect the related Service Bulletins and/or On-line Repair Information and perform repair or diagnosis. • If the vehicle is repaired, troubleshooting completed. • If the vehicle is not repaired or additional diagnostic information is not available, replace the TCM.		

* : If case of shift solenoid C failure

NO.6 LOW MAXIMUM SPEED AND POOR ACCELERATION [AW6A-EL]

E6U050300000W11

6	Low maximum speed and poor acceleration
DESCRIPTION	• Vehicle acceleration is poor at start. • Delayed acceleration when accelerator pedal is depressed while driving.
POSSIBLE CAUSE	• If the clutch is stuck or does not stay in 4GR, malfunction is in engine circuit. — Clutch slippage, burnt (C1 clutch, C2 clutch, C3 clutch, B1 brake) • Line pressure low • Incorrect throttle position signal • VSS malfunction • Input/turbine speed sensor malfunction • Sensor GND malfunction • Shift solenoid C malfunction • Shift solenoid D malfunction • Shift solenoid E malfunction • Line pressure control solenoid malfunction • Shift solenoid F malfunction • Body GND malfunction • Control valve body malfunction — Transaxle fixed in 3GR or 5GR* (Operation of fail-safe function) • Short or open circuit in wiring harness • Poor connection of connector • Malfunction of electronic parts of output and input system — Insufficient starting torque (Suspected when in-gear, shift control and engine circuit are normal) • Torque converter malfunction (Poor operation, stuck) **Note** • Before following the troubleshooting steps, make sure that the Automatic Transaxle On-Board Diagnostic and Automatic Transaxle Basic Inspection are conducted. (See 05–03B–4 BASIC INSPECTION [AW6A-EL].)

Diagnostic procedure

STEP	INSPECTION		ACTION
1	• With the ignition switch at the ON position, does the gear position indicator light indication correspond to the selector lever position?	Yes	Go to the next step.
		No	Go to No.27 "GEAR POSITION INDICATOR LIGHT DOES NOT ILLUMINATE IN M RANGE", or No.28 "GEAR POSITION INDICATOR LIGHT ILLUMINATES IN D RANG OR P, N, R POSITIONS".
2	• Go to No.12 "LACK/LOSS OF POWER-ACCELERATION/CRUISE". (See 01–03C–38 NO.12 LACK/LOSS OF POWER-ACCELERATION/CRUISE [AJ].) • Does engine control system normal?	Yes	Go to the next step.
		No	Repair or replace any malfunctioning parts according to the inspection results.
3	• Stop the engine. • Inspect following solenoid. (See 05–17B–20 SOLENOID VALVE INSPECTION [AW6A-EL].) — Shift solenoid C — Shift solenoid D — Shift solenoid E — Shift solenoid F — Line pressure control solenoid • Are they normal?	Yes	Go to the next step.
		No	Inspect the coupler component. If normal, replace the control valve body. (See 05–17B–39 CONTROL VALVE BODY REMOVAL/INSTALLATION [AW6A-EL].)
4	• Remove the torque converter. (See 05–17B–46 TORQUE CONVERTER REMOVAL/INSTALLATION [AW6A-EL].) • Inspect the torque converter. • Is the torque converter normal?	Yes	Inspect the ATF condition. • If a large amount of metal specks are found, replace the transaxle. (See 05–17B–30 AUTOMATIC TRANSAXLE REMOVAL/INSTALLATION [AW6A-EL].) • If a large amount of metal specks are not found, replace the control valve body. (See 05–17B–39 CONTROL VALVE BODY REMOVAL/INSTALLATION [AW6A-EL].)
		No	Replace the torque converter.
5	• Verify test results. — If normal, return to the diagnostic index to service any additional symptoms. — If malfunction remains, inspect the related Service Bulletins and/or On-line Repair Information and perform repair or diagnosis. • If the vehicle is repaired, troubleshooting completed. • If the vehicle is not repaired or additional diagnostic information is not available, replace the TCM.		

* : If case of shift solenoid C failure

NO.7 NO SHIFTING [AW6A-EL]

E6U050300000W12

7	No shifting
DESCRIPTION	• Single shift range only. • Sometimes it shifts correctly.
POSSIBLE CAUSE	• When the gear position is fixed in 3GR or 5GR* due to the fail-safe operation, malfunction is in the ATX. • Perform malfunction diagnosis according to No.6 "LOW MAXIMUM SPEED AND POOR ACCELERATION". — Clutch burnt (C1 clutch, C2 clutch, C3 clutch, B1 brake) • Line pressure low • Incorrect throttle position signal • VSS malfunction • Input/turbine speed sensor malfunction • Sensor GND malfunction • Shift solenoid C malfunction • Shift solenoid D malfunction • Shift solenoid E malfunction • Line pressure control solenoid malfunction • Shift solenoid F malfunction • Control valve body malfunction — 3GR or 5GR* is fixed (Operation in fail-safe function) • Short or open circuit in wiring harness • Poor connection of connector • Poor ground of shift solenoid • Malfunction of electronic parts of output and input system

* : If case of shift solenoid C failure

NO.8 DOES NOT SHIFT TO 6GR [AW6A-EL]

E6U050300000W13

8	Does not shift to 6GR
DESCRIPTION	• Vehicle does not upshift from 5GR to 6GR even though vehicle speed is increased. • Vehicle does not shift to 6GR even though accelerator pedal is released in D range at **80 km/h {50 mph}**.
POSSIBLE CAUSE	• Basically, TCC does not operate when the fail-safe is operating. Verify the DTC at first. If the TCC operates when driving at high speeds only, the malfunction (improper adjustment) is in the M range switch circuit or TR switch circuit. **Caution** • **If the TCC is stuck, inspect it. In addition, inspect the oil cooler for foreign particles which may have mixed in with the ATF.** — TCC slippage, burnt • Line pressure low • Incorrect throttle position signal • VSS malfunction • Input/turbine speed sensor malfunction • Sensor GND malfunction — TFT sensor malfunction • Short or open circuit in wiring harness • Poor connection of connector • Sensor malfunction — TR switch malfunction • Selector lever adjustment incorrect • TR switch adjustment incorrect — TCC control solenoid malfunction • Short or open circuit in wiring harness • Poor connection of connector • Solenoid valve stuck — M range switch malfunction • Selector lever adjustment incorrect • Short or open circuit in wiring harness — Torque converter malfunction — Control valve body malfunction **Note** • Before following the troubleshooting steps, make sure that the Automatic Transaxle On-Board Diagnostic and Automatic Transaxle Basic Inspection are conducted. (See 05–03B–4 BASIC INSPECTION [AW6A-EL].)

Diagnostic procedure

STEP	INSPECTION		ACTION
1	• With the ignition switch at the ON position. • Does the gear position indicator light indication correspond to selector lever position?	Yes	Go to the next step.
		No	Go to No.27 "GEAR POSITION INDICATOR LIGHT DOES NOT ILLUMINATE IN M RANGE", or No.28 "GEAR POSITION INDICATOR LIGHT ILLUMINATES IN D RANGE OR P, N, R POSITIONS".
2	• Drive the vehicle in D range and inspect following: — 1–2 shift up and down — 2–3 shift up and down — 3–4 shift up and down — 4–5 shift up and down — 5–6 shift up and down • Are all shift-up and shift-down possible?	Yes	Go to the next step.
		No	**No shift at all:** • Go to No.7 "NO SHIFTING". **Abnormal shift:** • Go to No.9 "ABNORMAL SHIFTING".
3	• Stop the engine. • Inspect following solenoid. (See 05–17B–20 SOLENOID VALVE INSPECTION [AW6A-EL].) — Shift solenoid C — Shift solenoid D — Shift solenoid E — Shift solenoid F — Line pressure control solenoid • Are they normal?	Yes	Go to the next step.
		No	Inspect for shift solenoid stuck. (See 05–17B–20 SOLENOID VALVE INSPECTION [AW6A-EL].)
4	• Remove the torque converter. (See 05–17B–46 TORQUE CONVERTER REMOVAL/INSTALLATION [AW6A-EL].) • Inspect the torque converter. • Is the torque converter normal?	Yes	Inspect the ATF condition. • If a large amount of metal specks are found, replace the transaxle. (See 05–17B–30 AUTOMATIC TRANSAXLE REMOVAL/INSTALLATION [AW6A-EL].) • If a large amount of metal specks are not found, replace the control valve body. (See 05–17B–39 CONTROL VALVE BODY REMOVAL/INSTALLATION [AW6A-EL].)
		No	Replace the torque converter.
5	• Verify test results. — If normal, return to the diagnostic index to service any additional symptoms. — If malfunction remains, inspect the related Service Bulletins and/or On-line Repair Information and perform repair or diagnosis. • If the vehicle is repaired, troubleshooting completed. • If the vehicle is not repaired or additional diagnostic information is not available, replace the TCM.		

NO.9 ABNORMAL SHIFTING [AW6A-EL]

E6U050300000W14

9	Abnormal shifting
DESCRIPTION	• Shift incorrectly (incorrect shift pattern).
POSSIBLE CAUSE	• There is a malfunction in the signal circuit which controls shifting (Throttle position signal, input/turbine speed sensor, VSS), the control valve is stuck, or the clutch circuit is stuck. — Clutch slippage, burnt (C1 clutch, C2 clutch, C3 clutch, B1 brake) • Line pressure low • Incorrect throttle position signal • VSS malfunction • Input/turbine speed sensor malfunction • Sensor GND malfunction • Shift solenoid C malfunction • Shift solenoid D malfunction • Shift solenoid E malfunction • Line pressure control solenoid malfunction • TCC control solenoid malfunction • Shift solenoid F malfunction • Body GND malfunction • Control valve body malfunction • TR switch adjustment incorrect **Note** • Before following the troubleshooting steps, make sure that the Automatic Transaxle On-Board Diagnostic and Automatic Transaxle Basic Inspection are conducted. (See 05–03B–4 BASIC INSPECTION [AW6A-EL].)

05–03B

Diagnostic procedure

STEP	INSPECTION		ACTION
1	• Inspect for continuity between the TCM terminal A9 and battery negative terminal. • Is there continuity?	Yes	Go to the next step.
		No	Repair or replace ground circuit.
2	• Inspect following shift solenoids. (See 05–17B–20 SOLENOID VALVE INSPECTION [AW6A-EL].) — Shift solenoid C — Shift solenoid D — Shift solenoid E — Line pressure control solenoid — TCC control solenoid — Shift solenoid F • Are they normal?	Yes	Inspect the TCM terminal for bend, damage, corrosion or poor contact.
		No	Inspect the coupler component. If normal, replace the control valve body. (See 05–17B–39 CONTROL VALVE BODY REMOVAL/ INSTALLATION [AW6A-EL].)
3	• Verify test results. — If normal, return to the diagnostic index to service any additional symptoms. — If malfunction remains, inspect the related Service Bulletins and/or On-line Repair Information and perform repair or diagnosis. • If the vehicle is repaired, troubleshooting completed. • If the vehicle is not repaired or additional diagnostic information is not available, replace the TCM.		

NO.10 FREQUENT SHIFTING [AW6A-EL]

E6U050300000W15

10	Frequent shifting
DESCRIPTION	• Downshifting occurs suddenly even when accelerator pedal is depressed slightly in D range.
POSSIBLE CAUSE	• The malfunctioning circuit is basically the same as No.9 "ABNORMAL SHIFTING". However, a malfunction of the input signal to the accelerator pedal position sensor, TP sensor, input/turbine speed sensor, VSS (including the sensor GND, sensor wiring harness and connector), or clutch slippage (clutch stuck, low pressure in line) may also be the cause.

NO.11 SHIFT POINT IS HIGH OR LOW [AW6A-EL]

E6U050300000W16

11	Shift point is high or low
DESCRIPTION	• Shift point considerably different from automatic shift diagram. • Shift delays when accelerating. • Shift occurs quickly when accelerating and engine speed does not increase.
POSSIBLE CAUSE	• If the transaxle does not shift abnormally, there is a malfunction of the input signal to the TP sensor, input/turbine speed sensor, or VSS. • If the engine speed is high or low, regardless of normal shifting, inspect the tachometer. • Verify that the output signals of the accelerator pedal position sensor and TP sensor change linearly.

NO.12 TORQUE CONVERTER CLUTCH (TCC) NON-OPERATION [AW6A-EL]

E6U050300000W17

12	Torque converter clutch (TCC) non-operation
DESCRIPTION	• TCC does not operate when vehicle reaches TCC operation range.
POSSIBLE CAUSE	• Basically, TCC does not operate when the fail-safe is operating. Verify the DTC at first. If the TCC operates when driving at high speeds only, the malfunction (improper adjustment) is in the M range switch circuit or TR switch circuit. **Caution** • **If the TCC is stuck, inspect it. In addition, inspect the oil cooler for foreign particles which may have mixed in with the ATF.** • TCC slippage, burnt — Line pressure low • Incorrect throttle position signal • Input/turbine speed sensor malfunction • VSS malfunction • Output solenoid valve system malfunction (Sticking) • TCC control solenoid malfunction • Control valve body system malfunction (Poor operation, sticking) • TCC hydraulic pressure system malfunction • Accelerator pedal position sensor malfunction (Not operating linearly) • Input/turbine speed sensor or VSS malfunction • Operation of fail-safe function. — Short to power or GND at TCC control solenoid related circuit. **Note** • Before following the troubleshooting steps, make sure that the Automatic Transaxle On-Board Diagnostic and Automatic Transaxle Basic Inspection are conducted. (See 05–03B–4 BASIC INSPECTION [AW6A-EL].)

Diagnostic procedure

STEP	INSPECTION		ACTION
1	• With the ignition switch at the ON position. • Does the gear position indicator light indication correspond to the selector lever position?	Yes	Go to the next step.
		No	Go to No.27 "GEAR POSITION INDICATOR LIGHT DOES NOT ILLUMINATE IN M RANGE", or No.28 "GEAR POSITION INDICATOR LIGHT ILLUMINATES IN D RANGE OR P, N, R POSITIONS".
2	• Disconnect the TCM. • Is the resistance between the TCM ground terminal A9 and the body GND **less than 5.0 ohms**?	Yes	Go to the next step.
		No	Repair open ground circuit.
3	• Inspect the line pressure control solenoid. (See 05–17B–20 SOLENOID VALVE INSPECTION [AW6A-EL].) • Is the line pressure control solenoid normal?	Yes	Go to the next step.
		No	Replace the control valve body. (See 05–17B–39 CONTROL VALVE BODY REMOVAL/ INSTALLATION [AW6A-EL].)
4	• Remove the torque converter. (See 05–17B–46 TORQUE CONVERTER REMOVAL/INSTALLATION [AW6A-EL].) • Inspect the torque converter. • Is the torque converter normal?	Yes	Inspect the ATF condition. • If a large amount of metal specks are found, replace the transaxle. (See 05–17B–30 AUTOMATIC TRANSAXLE REMOVAL/ INSTALLATION [AW6A-EL].) • If a large amount of metal specks are not found, replace the control valve body. (See 05–17B–39 CONTROL VALVE BODY REMOVAL/ INSTALLATION [AW6A-EL].)
		No	Replace the torque converter.
5	• Verify test results. — If normal, return to the diagnostic index to service any additional symptoms. — If malfunction remains, inspect the related Service Bulletins and/or On-line Repair Information and perform repair or diagnosis. • If the vehicle is repaired, troubleshooting completed. • If the vehicle is not repaired or additional diagnostic information is not available, replace the TCM.		

NO.13 NO KICKDOWN [AW6A-EL]

E6U050300000W18

13	No kickdown
DESCRIPTION	• Does not downshift when accelerator pedal is fully depressed within kickdown range.
POSSIBLE CAUSE	• If transaxle does not downshift though shifting is normal, the malfunction is in the accelerator pedal position sensor and accelerator pedal position sensor circuits (including sensor GND, sensor wiring harness and connector).

NO.14 ENGINE FLARES UP OR SLIPS WHEN UPSHIFTING OR DOWNSHIFTING [AW6A-EL]

E6U050300000W19

14	Engine flares up or slips when upshifting or downshifting
DESCRIPTION	• When the accelerator pedal is depressed for acceleration from standstill, engine speed increases but the vehicle speed increases slowly. • When the accelerator pedal is depressed while driving, engine speed increases but the vehicle speed does not.
POSSIBLE CAUSE	• There is clutch slippage because the clutch is stuck or the line pressure is low. — Clutch stuck, slippage (C1 clutch, C2 clutch, C3 clutch, B1 brake) • Line pressure low • Incorrect throttle position signal • VSS malfunction • Input/turbine speed sensor malfunction • Sensor GND malfunction • Shift solenoid C malfunction • Shift solenoid D malfunction • Shift solenoid E malfunction • Line pressure control solenoid malfunction • TCC control solenoid malfunction • Shift solenoid F malfunction • Body GND malfunction • Control valve body malfunction **Note** • Before following the troubleshooting steps, make sure that the Automatic Transaxle On-Board Diagnostic and Automatic Transaxle Basic Inspection are conducted. (See 05–03B–4 BASIC INSPECTION [AW6A-EL].)

Diagnostic procedure

STEP	INSPECTION		ACTION
1	• Is the line pressure normal? (See 05–17B–4 Line Pressure Test.)	Yes	Go to the next step.
		No	Repair or replace any malfunctioning parts according to the inspection results.
2	• Is shift point normal? (See 05–17B–7 ROAD TEST [AW6A-EL].)	Yes	Go to the next step.
		No	Go to No.9 "ABNORMAL SHIFTING".
3	• Stop the engine. • Inspect following solenoids. (See 05–17B–20 SOLENOID VALVE INSPECTION [AW6A-EL].) — Shift solenoid C — Shift solenoid D — Shift solenoid E — Line pressure control solenoid — TCC control solenoid — Shift solenoid F • Are they normal?	Yes	Inspect the ATF condition. • If a large amount of metal specks are found, replace the transaxle. (See 05–17B–30 AUTOMATIC TRANSAXLE REMOVAL/ INSTALLATION [AW6A-EL].) • If a large amount of metal specks are not found, replace the control valve body. (See 05–17B–39 CONTROL VALVE BODY REMOVAL/ INSTALLATION [AW6A-EL].)
		No	Replace the control valve body. (See 05–17B–39 CONTROL VALVE BODY REMOVAL/ INSTALLATION [AW6A-EL].)
4	• Inspect the coupler component for open or short. • Are coupler component normal?	Yes	Go to the next step.
		No	Replace the coupler component.
5	• Inspect the ATF condition. • Are a large amount of specks found?	Yes	Replace the transaxle. (See 05–17B–30 AUTOMATIC TRANSAXLE REMOVAL/ INSTALLATION [AW6A-EL].)
		No	Replace the control valve body. (See 05–17B–39 CONTROL VALVE BODY REMOVAL/ INSTALLATION [AW6A-EL].)
6	• Verify test results. — If normal, return to the diagnostic index to service any additional symptoms. — If malfunction remains, inspect the related Service Bulletins and/or On-line Repair Information and perform repair or diagnosis. • If the vehicle is repaired, troubleshooting completed. • If the vehicle is not repaired or additional diagnostic information is not available, replace the TCM.		

NO.15 ENGINE FLARES UP OR SLIPS WHEN ACCELERATING VEHICLE [AW6A-EL]

E6U050300000W20

15	Engine flares up or slips when accelerating the vehicle
DESCRIPTION	• Engine flares up when the accelerator pedal is depressed for upshifting. • Engine flares up suddenly when the accelerator pedal is depressed for downshifting.
POSSIBLE CAUSE	• The malfunction is basically the same as for No.14 "ENGINE FLARES UP OR SLIPS WHEN UPSHIFTING OR DOWNSHIFTING". — If conditions for No.14 worsen, the malfunction will develop to No.15.

NO.16 JUDDER UPON TORQUE CONVERTER CLUTCH (TCC) OPERATION [AW6A-EL]

E6U050300000W21

16	Judder upon torque converter clutch (TCC) operation
DESCRIPTION	• Vehicle jolts when TCC is engaged.
POSSIBLE CAUSE	• Poor TCC engagement due to either slippage because the TCC piston is stuck or the line pressure is low. **Caution** • **If the TCC is stuck, inspect it. In addition, inspect the oil cooler for foreign particles which may have mixed in with the ATF.** — TCC slippage, burnt • Line pressure low • Incorrect throttle position signal • VSS malfunction • Input/turbine speed sensor malfunction • Sensor GND malfunction • TCC control solenoid malfunction • Control valve body malfunction — Torque converter malfunction — Centrifugal hydraulic pressure clutch is not operating properly

NO.17 EXCESSIVE SHIFT SHOCK FROM N TO D OR N TO R POSITION/RANGE [AW6A-EL]

E6U050300000W22

17	Excessive shift shock from N to D or N to R position/range
DESCRIPTION	• Strong shock felt when shifting from N to D or N to R position/range at idle.
POSSIBLE CAUSE	• Shift shock may worsen when the fail-safe is operating. If no DTC is output, the shift shock may worsen due to poor operation of the control valve body or sticking of the clutch. — Clutch burnt (N→D: C1 clutch, N→R: C3 clutch or B2 brake) • Line pressure low • Incorrect throttle position signal • Incorrect accelerator position signal • TFT sensor malfunction • Sensor GND malfunction • Shift solenoid C malfunction • Shift solenoid E malfunction • Line pressure control solenoid malfunction • Control valve body malfunction — Poor hydraulic operation (Malfunction in range change) — Idle speed high — Poor tightening torque of engine mount, exhaust mount — Line pressure high — Garage shift control is not learned • Initial learning did not perform **Note** • Before following the troubleshooting steps, make sure that the Automatic Transaxle On-Board Diagnostic and Automatic Transaxle Basic Inspection are conducted. (See 05–03B–4 BASIC INSPECTION [AW6A-EL].)

Diagnostic procedure

STEP	INSPECTION		ACTION
1	• Does the shift shock occur only when the engine is cold?	Yes	Go to the next step.
		No	Go to Step 3.
2	• Inspect the TFT sensor and related wiring harness: vibration, intermittent open/short circuit. (See 05–17B–13 TRANSAXLE FLUID TEMPERATURE (TFT) SENSOR INSPECTION [AW6A-EL].) • Is it normal?	Yes	Go to the next step.
		No	Repair or replace part if necessary.
3	• Perform the initial learning procedure. (See 05–03B–23 Initial Learning.) • Does symptom eliminate?	Yes	Troubleshooting is completed.
		No	Go to the next step.
4	• Is the line pressure normal? (See 05–17B–4 Line Pressure Test.)	Yes	Go to the next step.
		No	Repair or replace any malfunctioning parts according to the inspection results.
5	• Is stall speed normal? (See 05–17B–6 Stall Test.)	Yes	Go to the next step.
		No	Repair or replace any malfunctioning parts according to the inspection results.
6	• Stop the engine. • Inspect following solenoids. (See 05–17B–20 SOLENOID VALVE INSPECTION [AW6A-EL].) — Line pressure control solenoid — Shift solenoid C — Shift solenoid E • Are they normal?	Yes	Inspect the ATF condition. • If a large amount of metal specks are found, replace the transaxle. (See 05–17B–30 AUTOMATIC TRANSAXLE REMOVAL/ INSTALLATION [AW6A-EL].) • If a large amount of metal specks are not found, replace the control valve body. (See 05–17B–39 CONTROL VALVE BODY REMOVAL/ INSTALLATION [AW6A-EL].)
		No	• Replace the control valve body. (See 05–17B–39 CONTROL VALVE BODY REMOVAL/ INSTALLATION [AW6A-EL].)
7	• Verify test results. — If normal, return to the diagnostic index to service any additional symptoms. — If malfunction remains, inspect the related Service Bulletins and/or On-line Repair Information and perform repair or diagnosis. • If the vehicle is repaired, troubleshooting completed. • If the vehicle is not repaired or additional diagnostic information is not available, replace the TCM.		

Initial Learning

Warning
- **When performing a initial learning, be aware of other vehicles, people, and other impediments to order to avoid an accident.**

Note
- While self-learning control gradually reduces shock during normal driving, initial learning is performed to initially learn a certain amount of driving conditions.

1. Warm-up
   - Increase the ATF temperature by leaving the vehicle idling or performing city driving. Verify that the ATF temperature is **between 66—110 C {151—230 F}**. If the ATF temperature is outside this range, work to bring it inside the range.

Caution
- **Do not raise the ATF temperature by stalling the engine.**

Note
- If the ATF temperature is not **between 66—110 C {151—230 F}**, initial learning cannot be performed. Before learning, inspect for variable shift shock.

2. Garage shift learning
   - With the vehicle standing still, depress the brake pedal and keep the selector lever in N position for **3 s**. Then, shift the selector lever from the N position into D range, and maintain in this condition for **3 s**. Repeat this procedure **5 times**. Then repeat it **5 times** in the same way for R position.
3. Gear shift control learning
   - In D range, with the throttle opening between **25—30 %**, drive until you reach 6th gear and a vehicle speed of **80 km/h {50 mph}** or higher. Then, release the accelerator pedal and coast, and bring the vehicle to a stop in at least **60 s**. Repeat this procedure **10 times**.
4. Inspect learning results
   - Verify that variable speed shock and shift shock have decreased compared to the conditions before learning.

NO.18 EXCESSIVE SHIFT SHOCK IS GIVEN WHEN UPSHIFTING AND DOWNSHIFTING [AW6A-EL]

E6U050300000W23

18	Excessive shift shock is given when upshifting and downshifting
DESCRIPTION	• Excessive shift shock is felt when depressing the accelerator pedal at upshifting. • During cruising, excessive shift shock is felt when depressing accelerator pedal at downshifting.
POSSIBLE CAUSE	• Shift shock may worsen when the fail-safe is operating. The shift shock may worsen if the accelerator pedal position sensor, TP sensor, input/turbine speed sensor, or VSS signal malfunctions. — Clutch slippage, burnt (C1 clutch, C2 clutch, C3 clutch, B1 brake) • Line pressure low, high • Incorrect throttle position signal • VSS malfunction • Input/turbine speed sensor malfunction • TFT sensor malfunction • Shift solenoid C malfunction • Shift solenoid D malfunction • Shift solenoid E malfunction • Line pressure control solenoid malfunction • TCC control solenoid malfunction • Shift solenoid F malfunction • Body GND and sensor GND malfunction • Control valve body malfunction — Poor hydraulic operation (Malfunction in range change)

NO.19 EXCESSIVE SHIFT SHOCK ON TORQUE CONVERTER CLUTCH (TCC) [AW6A-EL]

E6U050300000W24

19	Excessive shift shock on torque converter clutch (TCC)
DESCRIPTION	• Strong shock is felt when the TCC is engaged.
POSSIBLE CAUSE	• The troubleshooting flow is the same as No.16 "JUDDER UPON TORQUE CONVERTER CLUTCH (TCC) OPERATION".

NO.20 NOISE OCCURS AT IDLE WHEN VEHICLE IS STOPPED IN ALL POSITIONS/RANGES [AW6A-EL]

E6U050300000W25

20	Noise occurs at idle when vehicle is stopped in all positions/ranges
DESCRIPTION	• Transaxle is noisy in all positions and ranges when the vehicle is idling.
POSSIBLE CAUSE	• The malfunction is in the pressure solenoid or oil pump which causes a high-pitched noise to be emitted from the transaxle at idle. **Note** • If a noise is emitted during shifting only, the malfunction is in the C1 clutch, C2 clutch, C3 clutch or B1 brake. • If a noise is emitted during shifting at certain gears only or during deceleration only, it is gear noise. • Before following the troubleshooting steps, make sure that the Automatic Transaxle On-Board Diagnostic and Automatic Transaxle Basic Inspection are conducted. (See 05–03B–4 BASIC INSPECTION [AW6A-EL].)

Diagnostic procedure

STEP	INSPECTION		ACTION
1	• Inspect engine condition. • Is there any engine concern (e.g. Rough idle)?	Yes	Go to appropriate symptom troubleshooting. (See 01–03C–8 SYMPTOM DIAGNOSTIC INDEX [AJ].)
		No	Replace basic inspection and repair or replace any malfunctioning parts according to the inspection result
2	• Verify test results. — If normal, return to the diagnostic index to service any additional symptoms. — If malfunction remains, inspect the related Service Bulletins and/or On-line Repair Information and perform repair or diagnosis. • If the vehicle is repaired, troubleshooting completed. • If the vehicle is not repaired or additional diagnostic information is not available, replace the TCM.		

NO.21 NOISE OCCURS AT IDLE WHEN VEHICLE IS STOPPED IN D RANGE, OR IN R POSITION [AW6A-EL]

E6U050300000W26

21	Noise occurs at idle when vehicle is stopped in D range, or in R position
DESCRIPTION	• Transaxle is noisy in driving ranges when vehicle idling.
POSSIBLE CAUSE	• Although the malfunction is basically the same as No.20 "NOISE OCCURS AT IDLE WHEN VEHICLE IS STOPPED IN ALL POSITIONS/RANGES", other causes may include selector lever position disparity or TR switch position disparity.

NO.22 NO ENGINE BRAKING IN 1GR POSITION OF M RANGE [AW6A-EL]

E6U050300000W27

22	No engine braking in 1GR position of M range
DESCRIPTION	• Engine speed drops to idle but the vehicle coasts when the accelerator pedal is released during cruising at medium to high speeds. • Engine speed drops to idle but the vehicle coasts when accelerator pedal is released when in M range (1GR) at low vehicle speed.
POSSIBLE CAUSE	• Clutch slippage, burnt (B2 brake) — Line pressure low • VSS malfunction • Input/turbine speed sensor malfunction • Shift solenoid A or B malfunction • Sensor GND malfunction • Control valve body malfunction **Note** • Before following the troubleshooting steps, make sure that the Automatic Transaxle On-Board Diagnostic and Automatic Transaxle Basic Inspection are conducted. (See 05–03B–4 BASIC INSPECTION [AW6A-EL].)

05–03E

Diagnostic procedure

STEP	INSPECTION		ACTION
1	• Do the following symptoms occur concurrently? — Engine flares up or slips during acceleration — Engine flares up or slips when shifting	Yes	Go to No.14 "ENGINE FLARES UP OR SLIPS WHEN UPSHIFTING OR DOWNSHIFTING", or No.15 "ENGINE FLARES UP OR SLIPS WHEN ACCELERATING VEHICLE".
		No	Go to the next step.
2	• Stop the engine. • Inspect following solenoids. (See 05–17B–20 SOLENOID VALVE INSPECTION [AW6A-EL].) — Shift solenoid A — Shift solenoid B • Are the normal?	Yes	Inspect the ATF condition. • If a large amount of metal specks are found, replace the transaxle. (See 05–17B–30 AUTOMATIC TRANSAXLE REMOVAL/ INSTALLATION [AW6A-EL].) • If a large amount of metal specks are not found, replace the control valve body. (See 05–17B–39 CONTROL VALVE BODY REMOVAL/ INSTALLATION [AW6A-EL].)
		No	Replace the control valve body. (See 05–17B–39 CONTROL VALVE BODY REMOVAL/ INSTALLATION [AW6A-EL].)
3	• Verify test results. — If normal, return to the diagnostic index to service any additional symptoms. — If malfunction remains, inspect the related Service Bulletins and/or On-line Repair Information and perform repair or diagnosis. • If the vehicle is repaired, troubleshooting completed. • If the vehicle is not repaired or additional diagnostic information is not available, replace the TCM.		

NO.23 TRANSAXLE OVERHEATS [AW6A-EL]

E6U050300000W28

23	TRANSAXLE OVERHEATS
DESCRIPTION	• Burnt smell emitted from transaxle. • Smoke emitted from transaxle.
POSSIBLE CAUSE	• The malfunction is restricted to the hindrance of coolant at the oil cooler. In addition, overheating of the transaxle may be caused by a malfunction of the TFT sensor. — Line pressure low • ATF level low • Incorrect throttle position signal — Oil cooler malfunction (Foreign material mixed in with ATF) — TFT sensor malfunction — Excessive amount of ATF **Note** • Before following the troubleshooting steps, make sure that the Automatic Transaxle On-Board Diagnostic and Automatic Transaxle Basic Inspection are conducted. (See 05–03B–4 BASIC INSPECTION [AW6A-EL].)

Diagnostic procedure

STEP	INSPECTION		ACTION
1	• Is the line pressure normal? (See 05–17B–4 Line Pressure Test.)	Yes	Go to the next step.
		No	Repair or replace any malfunctioning parts according to the inspection results.
2	• Is stall speed normal? (See 05–17B–6 Stall Test.)	Yes	Go to the next step.
		No	Repair or replace any malfunctioning parts according to the inspection results.
3	• Inspect the TFT sensor and related wiring harness: vibration, intermittent open/short circuit (See 05–17B–13 TRANSAXLE FLUID TEMPERATURE (TFT) SENSOR INSPECTION [AW6A-EL].) • Is it normal?	Yes	Go to the next step.
		No	Repair or replace part if necessary.
4	• Inspect the line pressure control solenoid. (See 05–17B–20 SOLENOID VALVE INSPECTION [AW6A-EL].) • Is it normal?	Yes	Go to the next step.
		No	Replace the control valve body. (See 05–17B–39 CONTROL VALVE BODY REMOVAL/ INSTALLATION [AW6A-EL].)
5	• Inspect for bending, damage, corrosion or kinks of the oil cooler pipes. • Are oil cooler pipes normal?	Yes	Replace the transaxle. (See 05–17B–30 AUTOMATIC TRANSAXLE REMOVAL/ INSTALLATION [AW6A-EL].)
		No	Replace any malfunctioning parts.
6	• Verify test results. — If normal, return to the diagnostic index to service any additional symptoms. — If malfunction remains, inspect the related Service Bulletins and/or On-line Repair Information and perform repair or diagnosis. • If the vehicle is repaired, troubleshooting completed. • If the vehicle is not repaired or additional diagnostic information is not available, replace the TCM.		

NO.24 ENGINE STALLS WHEN SHIFTED TO D RANGE, OR IN R POSITION [AW6A-EL]

E6U050300000W29

24	Engine stalls when shifted to D range, or in R position
DESCRIPTION	• Engine stalls when shifting from N or P position to D range or R position at idle.
POSSIBLE CAUSE	• The malfunction is on the engine control side (e.g. electronic controlled throttle system). Otherwise, the malfunction is in the input/turbine speed sensor (engine sometimes starts) or the TCC circuit (engine always stalls). **Note** • Before following the troubleshooting steps, make sure that the Automatic Transaxle On-Board Diagnostic and Automatic Transaxle Basic Inspection are conducted. (See 05–03B–4 BASIC INSPECTION [AW6A-EL].)

Diagnostic procedure

STEP	INSPECTION		ACTION
1	• Go to symptom troubleshooting No.5 "ENGINE STALLS-AFTER START/AT IDLE". (See 01–03C–20 NO.5 ENGINE STALLS-AFTER START/AT IDLE [AJ].) • Is the engine control system normal?	Yes	Go to the next step.
		No	Repair or replace any malfunctioning parts according to the inspection results.
2	• Remove the torque converter. (See 05–17B–46 TORQUE CONVERTER REMOVAL/INSTALLATION [AW6A-EL].) • Inspect the torque converter. • Is the torque converter normal?	Yes	Inspect for bending, damage, corrosion or kinks of the oil cooler pipes. • If normal, replace the control valve body. (See 05–17B–39 CONTROL VALVE BODY REMOVAL/INSTALLATION [AW6A-EL].) • If problem remains, replace the transaxle. (See 05–17B–30 AUTOMATIC TRANSAXLE REMOVAL/INSTALLATION [AW6A-EL].)
		No	Replace the torque converter.
3	• Verify test results. — If normal, return to the diagnostic index to service any additional symptoms. — If malfunction remains, inspect the related Service Bulletins and/or On-line Repair Information and perform repair or diagnosis. • If the vehicle is repaired, troubleshooting completed. • If the vehicle is not repaired or additional diagnostic information is not available, replace the TCM.		

NO.25 ENGINE STALLS WHEN DRIVING AT SLOW SPEED OR STOPPING [AW6A-EL]

E6U050300000W30

25	Engine stalls when driving at slow speeds or stopping
DESCRIPTION	• Engine stalls when the brake pedal is depressed while driving at low speed or stopping.
POSSIBLE CAUSE	• The malfunction is in the engine control system (e.g. Fuel injection control, electronic controlled throttle system) **Note** • Before following the troubleshooting steps, make sure that the Automatic Transaxle On-Board Diagnostic and Automatic Transaxle Basic Inspection are conducted. (See 05–03B–4 BASIC INSPECTION [AW6A-EL].)

Diagnostic procedure

STEP	INSPECTION		ACTION
1	• Go to symptom troubleshooting No.10 "LOW IDLE/STALLS DURING DECELERATION". (See 01–03C–33 NO.10 LOW IDLE/STALLS DURING DECELERATION [AJ].) • Is the engine control system normal?	Yes	Go to No.24 "ENGINE STALLS WHEN SHIFTED TO D RANGE, OR IN R POSITION".
		No	Repair or replace any malfunctioning parts according to the inspection results.
2	• Verify test results. — If normal, return to the diagnostic index to service any additional symptoms. — If malfunction remains, inspect the related Service Bulletins and/or On-line Repair Information and perform repair or diagnosis. • If the vehicle is repaired, troubleshooting completed. • If the vehicle is not repaired or additional diagnostic information is not available, replace the TCM.		

NO.26 STARTER DOES NOT WORK [AW6A-EL]

E6U050300000W31

26	Starter does not work
DESCRIPTION	• Starter does not work even when in P or N position.
POSSIBLE CAUSE	• Selector lever mis-adjustment • TR switch malfunction • N position learning is not performed. • Transaxle operates in fail-safe function (Starter lock system related circuit open or short) • Immobilizer system operating or system malfunction.

Diagnostic procedure

STEP	INSPECTION		ACTION
1	• Perform the N position learning. (See 05–17B–28 Neutral Position Learning.) • Does the problem eliminate?	Yes	Troubleshooting is completed. If the other symptom occurs, go to applicable troubleshooting procedure.
		No	Go to the next step.
2	• Inspect the TR switch. (See 05–17B–13 TRANSAXLE RANGE (TR) SWITCH INSPECTION [AW6A-EL].) • Is the TR switch normal?	Yes	Go to engine system troubleshooting No.3 "WILL NOT CRANK" troubleshooting procedure.
		No	Replace the TR switch and perform initial learning procedure. (See 05–03B–23 Initial Learning.)
3	• Verify test results. — If normal, return to the diagnostic index to service any additional symptoms. — If malfunction remains, inspect the related Service Bulletins and/or On-line Repair Information and perform repair or diagnosis. • If the vehicle is repaired, troubleshooting completed. • If the vehicle is not repaired or additional diagnostic information is not available, replace the TCM.		

NO.27 GEAR POSITION INDICATOR LIGHT DOES NOT ILLUMINATE IN M RANGE [AW6A-EL]

E6U050300000W32

27	Gear position indicator light does not illuminate in M range
DESCRIPTION	• Gear position indicator light in instrument cluster does not illuminate in M range with the ignition switc at ON.
POSSIBLE CAUSE	• M range switch, gear position indicator light or related wiring harness malfunction **Note** • Before following the troubleshooting steps, make sure that the Automatic Transaxle On-Board Diagnostic and Automatic Transaxle Basic Inspection are conducted. (See 05–03B–4 BASIC INSPECTION [AW6A-EL].)

Diagnostic procedure

STEP	INSPECTION		ACTION
1	• Do other indicator lights illuminate with the ignition switch at ON?	Yes	Go to the next step.
		No	Inspect the meter fuse.
2	• Inspect the voltage at the TCM terminal A7. (See 05–17B–21 TCM INSPECTION [AW6A-EL].) • Is the voltage normal?	Yes	Inspect the instrument cluster.
		No	Inspect the M range switch. If the M range switch is normal, inspect for continuity between the M range switch and TCM terminal A7.
3	• Verify test results. — If normal, return to the diagnostic index to service any additional symptoms. — If malfunction remains, inspect the related Service Bulletins and/or On-line Repair Information and perform repair or diagnosis. • If the vehicle is repaired, troubleshooting completed. • If the vehicle is not repaired or additional diagnostic information is not available, replace the TCM.		

NO.28 GEAR POSITION INDICATOR LIGHT ILLUMINATES IN D RANGE OR P, N, R POSITIONS [AW6A-EL]

E6U050300000W33

28	Gear position indicator light illuminates when in D range or P, N, R positions
DESCRIPTION	• Gear position indicator light in instrument cluster illuminates in D range or P, N, R position with the ignition switch at ON.
POSSIBLE CAUSE	• M range switch or related wiring harness malfunction **Note** • Before following the troubleshooting steps, make sure that the Automatic Transaxle On-Board Diagnostic and Automatic Transaxle Basic Inspection are conducted. (See 05–03B–4 BASIC INSPECTION [AW6A-EL].)

Diagnostic procedure

STEP	INSPECTION		ACTION
1	• Inspect the voltage at the TCM terminal A7. (See 05–17B–21 TCM INSPECTION [AW6A-EL].) • Is the voltage normal?	Yes	Inspect the instrument cluster.
		No	Inspect the M range switch. If the M range switch is normal, inspect for continuity between the M range switch and TCM terminal A7.
2	• Verify test results. — If normal, return to the diagnostic index to service any additional symptoms. — If malfunction remains, inspect the related Service Bulletins and/or On-line Repair Information and perform repair or diagnosis. • If the vehicle is repaired, troubleshooting completed. • If the vehicle is not repaired or additional diagnostic information is not available, replace the TCM.		

NO.29 DOES NOT UPSHIFT IN M RANGE [AW6A-EL]

E6U050300000W34

29	Does not upshift in M range
DESCRIPTION	• Gear position indicator light in instrument cluster illuminates, but the vehicle does not upshift when the selector lever is pushed to "+" side.
POSSIBLE CAUSE	• Up switch or related wiring harness malfunction

Diagnostic procedure

STEP	INSPECTION		ACTION
1	Inspect the voltage at the TCM terminal A3. (See 05–17B–21 TCM INSPECTION [AW6A-EL].) Is the voltage normal?	Yes	Inspect the instrument cluster.
		No	Inspect the up switch. • If the up switch is normal, inspect for continuity between the up switch and TCM terminal A3.
2	• Verify test results. — If normal, return to the diagnostic index to service any additional symptoms. — If malfunction remains, inspect the related Service Bulletins and/or On-line Repair Information and perform repair or diagnosis. • If the vehicle is repaired, troubleshooting completed. • If the vehicle is not repaired or additional diagnostic information is not available, replace the TCM.		

NO.30 DOES NOT DOWNSHIFT IN M RANGE [AW6A-EL]

E6U050300000W35

30	Does not downshift in M range
DESCRIPTION	• Gear position indicator light in instrument cluster illuminates, but the vehicle does not downshift when the selector lever is pushed to "–" side.
POSSIBLE CAUSE	• Down switch or related wiring harness malfunction

Diagnostic procedure

STEP	INSPECTION		ACTION
1	Inspect the voltage at the TCM terminal A4. (See 05–17B–21 TCM INSPECTION [AW6A-EL].) Is the voltage normal?	Yes	Inspect the instrument cluster.
		No	Inspect the down switch. • If the down switch is normal, inspect for continuity between the down switch and TCM terminal A4.
2	• Verify test results. — If normal, return to the diagnostic index to service any additional symptoms. — If malfunction remains, inspect the related Service Bulletins and/or On-line Repair Information and perform repair or diagnosis. • If the vehicle is repaired, troubleshooting completed. • If the vehicle is not repaired or additional diagnostic information is not available, replace the TCM.		

05–10 CLUTCH

CLUTCH LOCATION INDEX 05–10–2
GENERAL PROCEDURE 05–10–3
Clutch Pipe Removal/Installation 05–10–3
CLUTCH FLUID INSPECTION 05–10–3
CLUTCH FLUID AIR BLEEDING/REPLACEMENT 05–10–3
CLUTCH PEDAL INSPECTION 05–10–4
Clutch Pedal Height Inspection 05–10–4
Clutch Pedal Free Play Inspection 05–10–4
CLUTCH PEDAL ADJUSTMENT 05–10–5
Clutch Pedal Height 05–10–5
Clutch Pedal Free Play 05–10–5
Clutch Pedal Disengagement Point 05–10–6
CLUTCH PEDAL REMOVAL/INSTALLATION [G35M-R, A65M-R] 05–10–7
Clutch Pedal Installation Note 05–10–8
Starter Interlock Switch Installation Note 05–10–8
CLUTCH PEDAL REMOVAL/INSTALLATION [A26MX-R] 05–10–9
Clutch Pedal Installation Note 05–10–10
Starter Interlock Switch Installation Note 05–10–10
CLUTCH MASTER CYLINDER REMOVAL/INSTALLATION [G35M-R, A65M-R] 05–10–10
CLUTCH MASTER CYLINDER REMOVAL/INSTALLATION [A26MX-R] 05–10–11
CLUTCH MASTER CYLINDER DISASSEMBLY/ASSEMBLY [G35M-R, A65M-R] 05–10–12
Snap Ring Disassembly/Assembly Note 05–10–12
CLUTCH MASTER CYLINDER DISASSEMBLY/ASSEMBLY [A26MX-R] 05–10–13
Snap Ring Disassembly/Assembly Note 05–10–13
CLUTCH RELEASE CYLINDER REMOVAL/INSTALLATION [G35M-R, A65M-R] 05–10–14
CLUTCH RELEASE CYLINDER REMOVAL/INSTALLATION [A26MX-R] 05–10–16
CLUTCH RELEASE CYLINDER DISASSEMBLY/ASSEMBLY [G35M-R, A65M-R] 05–10–17
CLUTCH RELEASE CYLINDER DISASSEMBLY/ASSEMBLY [A26MX-R] 05–10–18
CLUTCH UNIT REMOVAL/INSTALLATION [G35M-R, A65M-R] 05–10–19
Clutch Cover and Disc Removal Note 05–10–21
Pilot Bearing Removal Note 05–10–21
Flywheel Removal Note 05–10–22
Flywheel Installation Note 05–10–22
Pilot Bearing Installation Note 05–10–23
Clutch Disc Installation Note 05–10–23
Clutch Cover Installation Note 05–10–24
CLUTCH UNIT REMOVAL/INSTALLATION [A26MX-R] 05–10–25
Clutch Cover and Disc Removal Note 05–10–26
Pilot Bearing Removal Note 05–10–26
Pilot Bearing Installation Note 05–10–27
Flywheel Removal Note 05–10–27
Flywheel Installation Note 05–10–28
Clutch Disc Installation Note 05–10–28
Clutch Cover Installation Note 05–10–28
CLUTCH COVER INSPECTION [G35M-R, A65M-R] 05–10–29
CLUTCH COVER INSPECTION [A26MX-R] 05–10–30
CLUTCH DISC INSPECTION 05–10–31
CLUTCH RELEASE COLLAR INSPECTION 05–10–31
PILOT BEARING INSPECTION 05–10–31
FLYWHEEL INSPECTION [G35M-R, A65M-R] 05–10–32
FLYWHEEL INSPECTION [A26MX-R] 05–10–32

CLUTCH LOCATION INDEX

E6U051016003W01

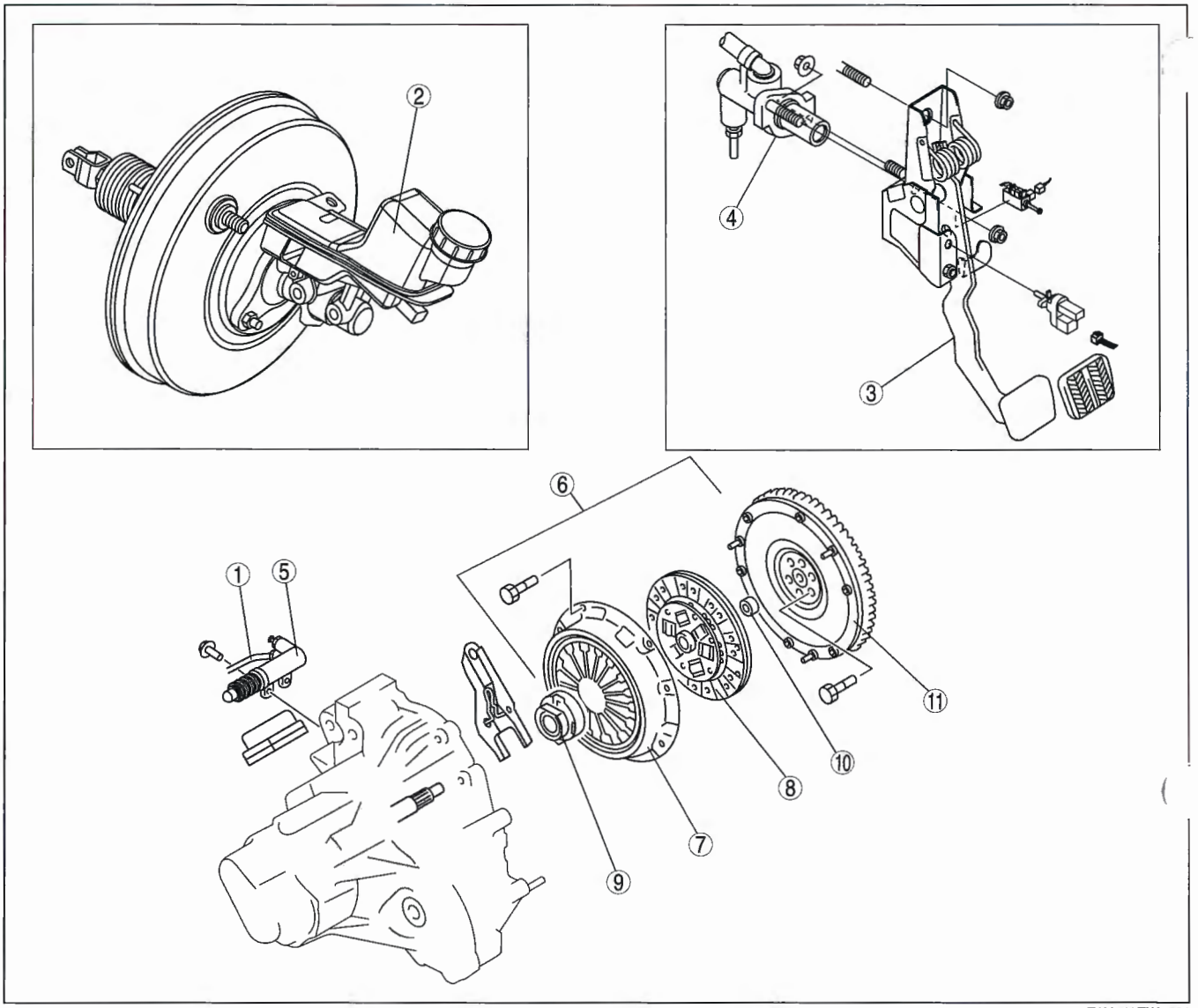

E6U510ZW5001

1	Clutch pipe (See 05–10–3 Clutch Pipe Removal/Installation.)
2	Clutch fluid (See 05–10–3 CLUTCH FLUID INSPECTION.) (See 05–10–3 CLUTCH FLUID AIR BLEEDING/ REPLACEMENT.)
3	Clutch pedal (See 05–10–4 CLUTCH PEDAL INSPECTION.) (See 05–10–5 CLUTCH PEDAL ADJUSTMENT.) (See 05–10–7 CLUTCH PEDAL REMOVAL/ INSTALLATION [G35M-R, A65M-R].) (See 05–10–9 CLUTCH PEDAL REMOVAL/ INSTALLATION [A26MX-R].)
4	Clutch master cylinder (See 05–10–10 CLUTCH MASTER CYLINDER REMOVAL/INSTALLATION [G35M-R, A65M-R].) (See 05–10–11 CLUTCH MASTER CYLINDER REMOVAL/INSTALLATION [A26MX-R].) (See 05–10–12 CLUTCH MASTER CYLINDER DISASSEMBLY/ASSEMBLY [G35M-R, A65M-R].) (See 05–10–13 CLUTCH MASTER CYLINDER DISASSEMBLY/ASSEMBLY [A26MX-R].)
5	Clutch release cylinder (See 05–10–14 CLUTCH RELEASE CYLINDER REMOVAL/INSTALLATION [G35M-R, A65M-R].) (See 05–10–16 CLUTCH RELEASE CYLINDER REMOVAL/INSTALLATION [A26MX-R].) (See 05–10–17 CLUTCH RELEASE CYLINDER DISASSEMBLY/ASSEMBLY [G35M-R, A65M-R].) (See 05–10–18 CLUTCH RELEASE CYLINDER DISASSEMBLY/ASSEMBLY [A26MX-R].)
6	Clutch unit (See 05–10–19 CLUTCH UNIT REMOVAL/ INSTALLATION [G35M-R, A65M-R].) (See 05–10–25 CLUTCH UNIT REMOVAL/ INSTALLATION [A26MX-R].)
7	Clutch cover (See 05–10–29 CLUTCH COVER INSPECTION [G35M-R, A65M-R].) (See 05–10–30 CLUTCH COVER INSPECTION [A26MX-R].)
8	Clutch disc (See 05–10–31 CLUTCH DISC INSPECTION.)

9	Clutch release collar (See 05–10–31 CLUTCH RELEASE COLLAR INSPECTION.)
10	Pilot bearing (See 05–10–31 PILOT BEARING INSPECTION.)
11	Flywheel (See 05–10–32 FLYWHEEL INSPECTION [G35M-R, A65M-R].) (See 05–10–32 FLYWHEEL INSPECTION [A26MX-R].)

GENERAL PROCEDURE

E6U051016003W02

Clutch Pipe Removal/Installation

Note
- A common reservoir is used for the clutch and brake system fluid.

1. If clutch pipes have been disconnected any time during the procedure, add clutch fluid (brake fluid), bleed the air, and inspect for leakage after the procedure has been completed.
2. Remove the clutch pipe using the **SST** (49 0259 770B). Install the clutch pipe using torque wrench **SST** combination. (See 00–00–17 Torque Formulas.)

CLUTCH FLUID INSPECTION

E6U051016010W01

Note
- A common reservoir is used for the clutch and brake system fluid.

1. Verify that the fluid is between the MIN mark and the MAX mark.
   - If necessary, add the fluid.

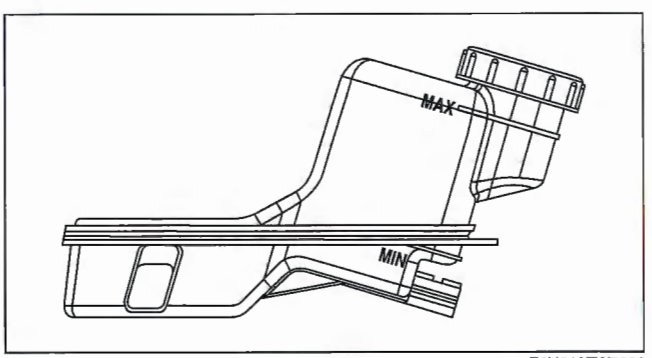

E6U510ZW5002

CLUTCH FLUID AIR BLEEDING/REPLACEMENT

E6U051016010W05

Caution
- **Fluid will damage painted surfaces. Be careful not to spill any on painted surfaces. If fluid does get on painted surfaces, wipe it off immediately.**
- **Keep the fluid level in the reserve tank at 3/4 full or more during air bleeding.**

Note
- When replacing the fluid, drain the old fluid, fill the reserve tank with new fluid and then perform Steps 1—7 below.

Specified fluid
SAE J1703, FMVSS 116 DOT-3

1. Remove the under cover.
2. Remove the bleeder cap from the clutch release cylinder, and connect a vinyl hose to the bleeder plug.
3. Place the other end of the vinyl tube in a clear container, and fill fluid in the container during air bleeding.
4. Working with two people, one should depress the clutch pedal a few times and then depress and hold the pedal down.
5. While the clutch pedal is being held down, the other person should loosen the bleeder screw using the **SST**, and bleed any fluid containing air bubbles. Once completed, tighten the bleeder screw.
6. Continue to perform Steps 4 and 5 until no air comes from the vinyl hose.

7. Tighten the bleeder screw using the **SST**.

   Tightening torque
   5.9—8.8 N·m {61—89 kgf·cm, 53—77 in·lbf}

8. Fill the reserve tank to MAX with the recommended fluid.
9. Perform the following inspections:
   - Clutch operation
   - Fluid leakage
   - Fluid level

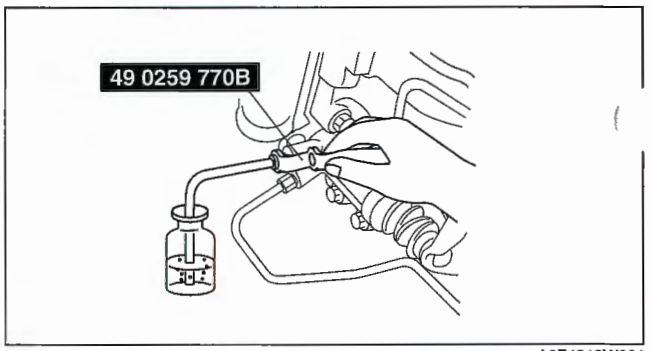

A6E4912W001

CLUTCH PEDAL INSPECTION

E6U051041030W01

Clutch Pedal Height Inspection

1. Measure the distance from the upper surface of the pedal pad.

   Clutch pedal height (Reference Value)
   210—216 mm {8.27—8.50 in}

2. Adjust the height if necessary. (See 05–10–5 Clutch Pedal Height.)

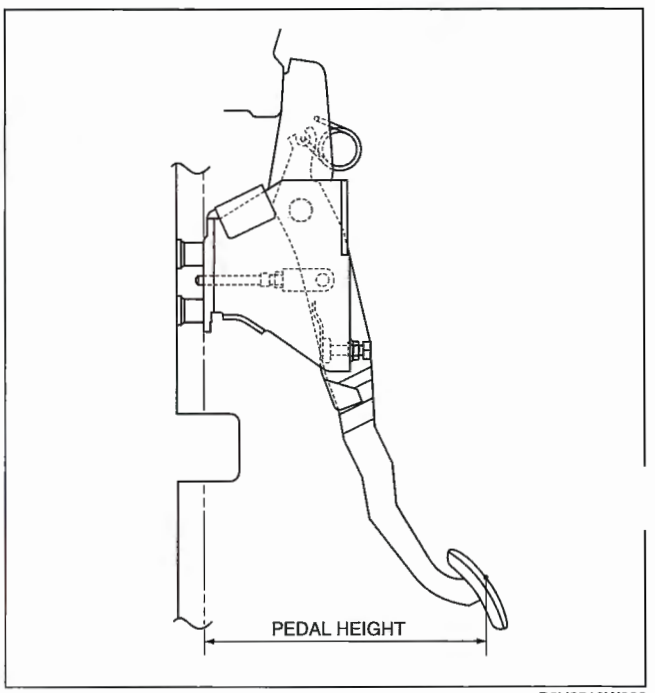

B6U0510W002

Clutch Pedal Free Play Inspection

1. Depress the clutch pedal by hand until clutch resistance is felt.

   Clutch pedal free play
   1.0—3.0 mm {0.04—0.11 in}

2. Adjust the free play if necessary. (See 05–10–5 Clutch Pedal Free Play.)

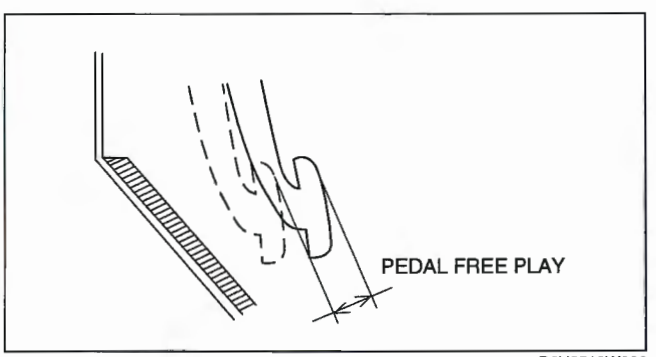

B6U0510W003

CLUTCH PEDAL ADJUSTMENT

E6U051041030W02

Clutch Pedal Height

1. Measure the distance from the upper surface of the pedal pad.
   - If not as specified, adjust the pedal height by turning adjustment bolt B and locknut A.

Clutch pedal height (Reference Value)
210—216 mm {8.27—8.50 in}

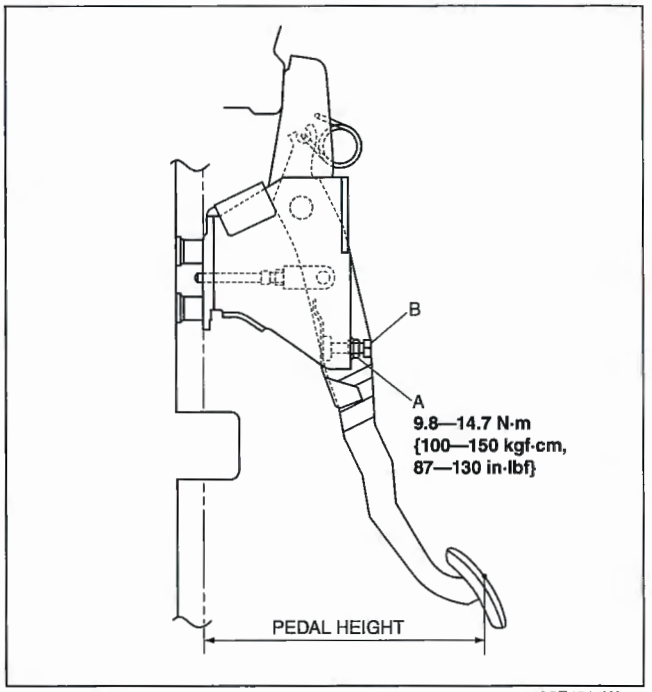

A6E4914W001

Clutch Pedal Free Play

1. Depress the clutch pedal by hand until clutch resistance is felt, and measure the pedal free play.
   - If not as specified, adjust the pedal free play by loosening locknut C and turning push rod D as necessary.

Clutch pedal free play
1.0—3.0 mm {0.04—0.11 in}

Clutch pedal push rod free play
0.1—0.5 mm {0.004—0.020 in} (Reference value)

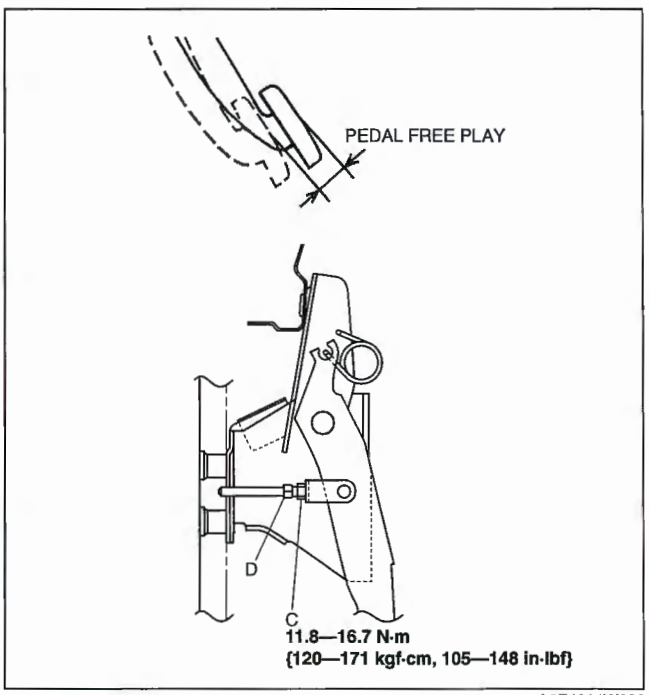

A6E4914W002

Clutch Pedal Disengagement Point

1. Apply the parking brake and fix the front and rear of the wheels with the wheel chocks.
2. Start the engine at idle.
3. Without depressing the clutch pedal, move the shift lever slowly to the reverse position.
4. Hold the lever when the gear noise is heard.
5. Depress the clutch pedal slowly.
6. Hold the pedal when the gear noise stops (clutch pedal disengagement point).
7. Measure distance A (the distance from the clutch pedal disengagement point to the fully depressed position) and the pedal stroke.
8. Verify that they are within specification.
   - If distance A or the pedal stroke is out of specification, adjust the pedal height or the clutch pedal free play to specification.

Clutch pedal disengagement stroke
Minimum: 20 mm {0.79 in} (Reference value)

Clutch pedal stroke
140 mm {5.51 in} (Reference value)

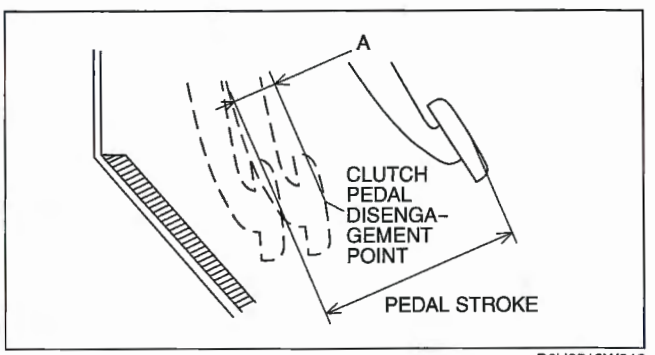

B6U0510W012

CLUTCH PEDAL REMOVAL/INSTALLATION [G35M-R, A65M-R]

E6U051041030W03

1. Remove the battery and battery tray.
2. Remove in the order indicated in the table.
   Install in the reverse order of removal.
3. After installation, inspect the clutch pedal. (See 05–10–5 CLUTCH PEDAL ADJUSTMENT.)

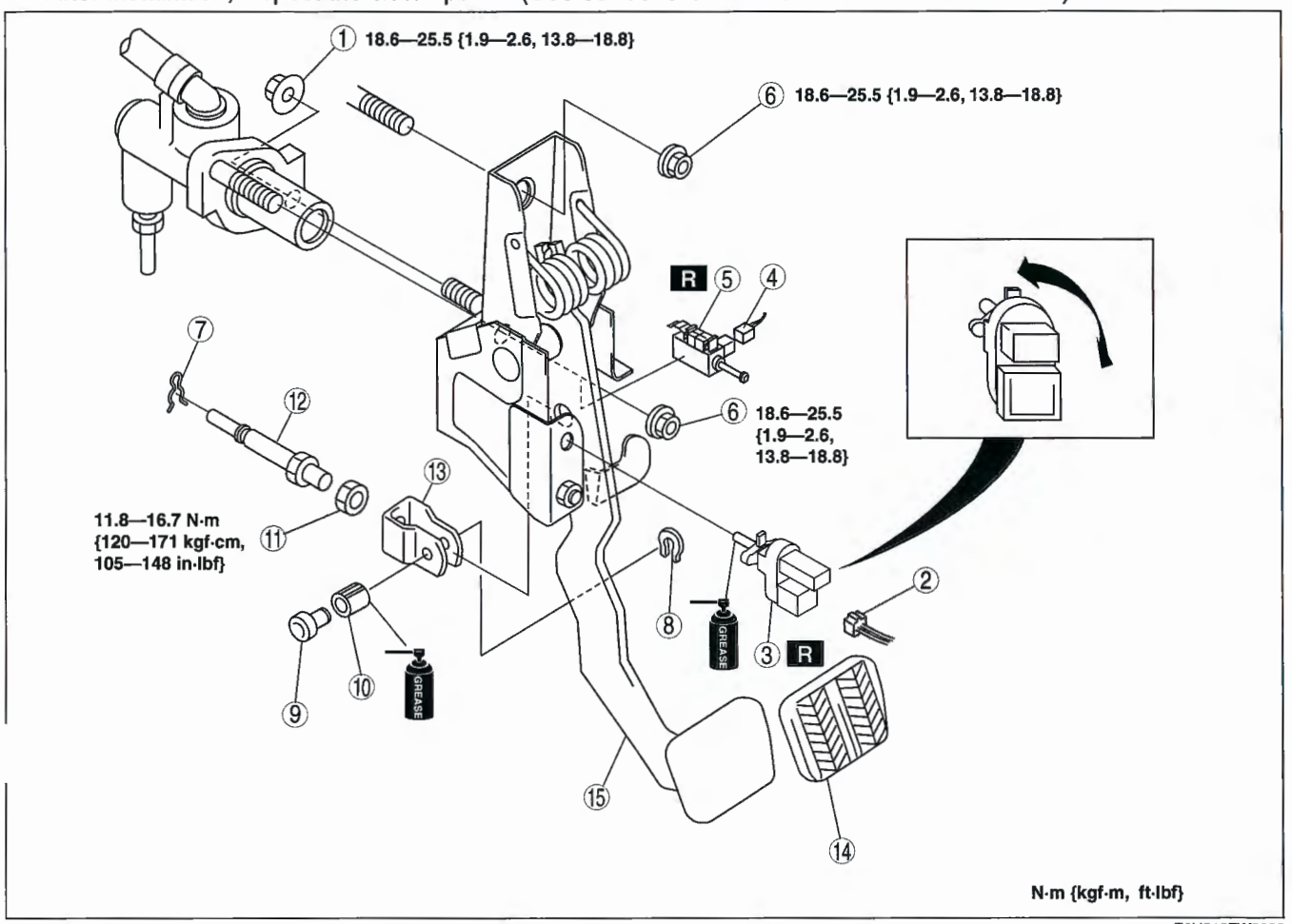

E6U510ZW5003

1	Nut
2	Clutch switch connector
3	Clutch switch
4	Starter interlock switch connector
5	Starter interlock switch (See 05–10–8 Starter Interlock Switch Installation Note.)
6	Nut
7	Spring

8	E-clip
9	Pin
10	Bushing
11	Nut
12	Push rod
13	Clevis
14	Pedal pad
15	Clutch pedal (See 05–10–8 Clutch Pedal Installation Note.)

Clutch Pedal Installation Note

1. After installation, adjust the pedal height and free play. (See 05–10–5 CLUTCH PEDAL ADJUSTMENT.)

Starter Interlock Switch Installation Note

1. Insert the new starter interlock switch into hole in pedal bracket in arrow direction A.
2. Slide starter interlock switch pressing it in arrow direction B until locked.
3. Press clutch pedal fully in arrow direction C and adjust terminal of starter interlock switch.

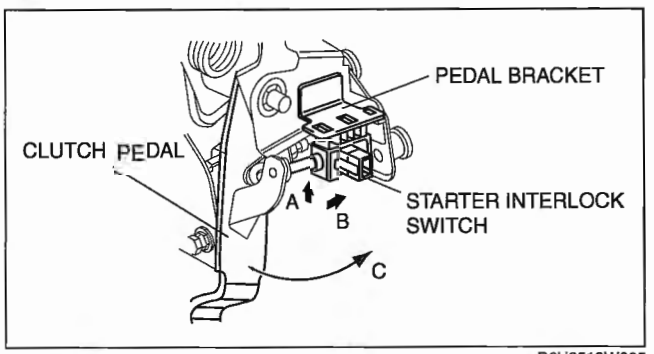

B6U0510W005

CLUTCH PEDAL REMOVAL/INSTALLATION [A26MX-R]

E6U051041030W07

1. Disconnect the negative battery cable.
2. Remove in the order indicated in the table.
   Install in the reverse order of removal.

+. After installation, inspect the clutch pedal. (See 05–10–5 CLUTCH PEDAL ADJUSTMENT.)

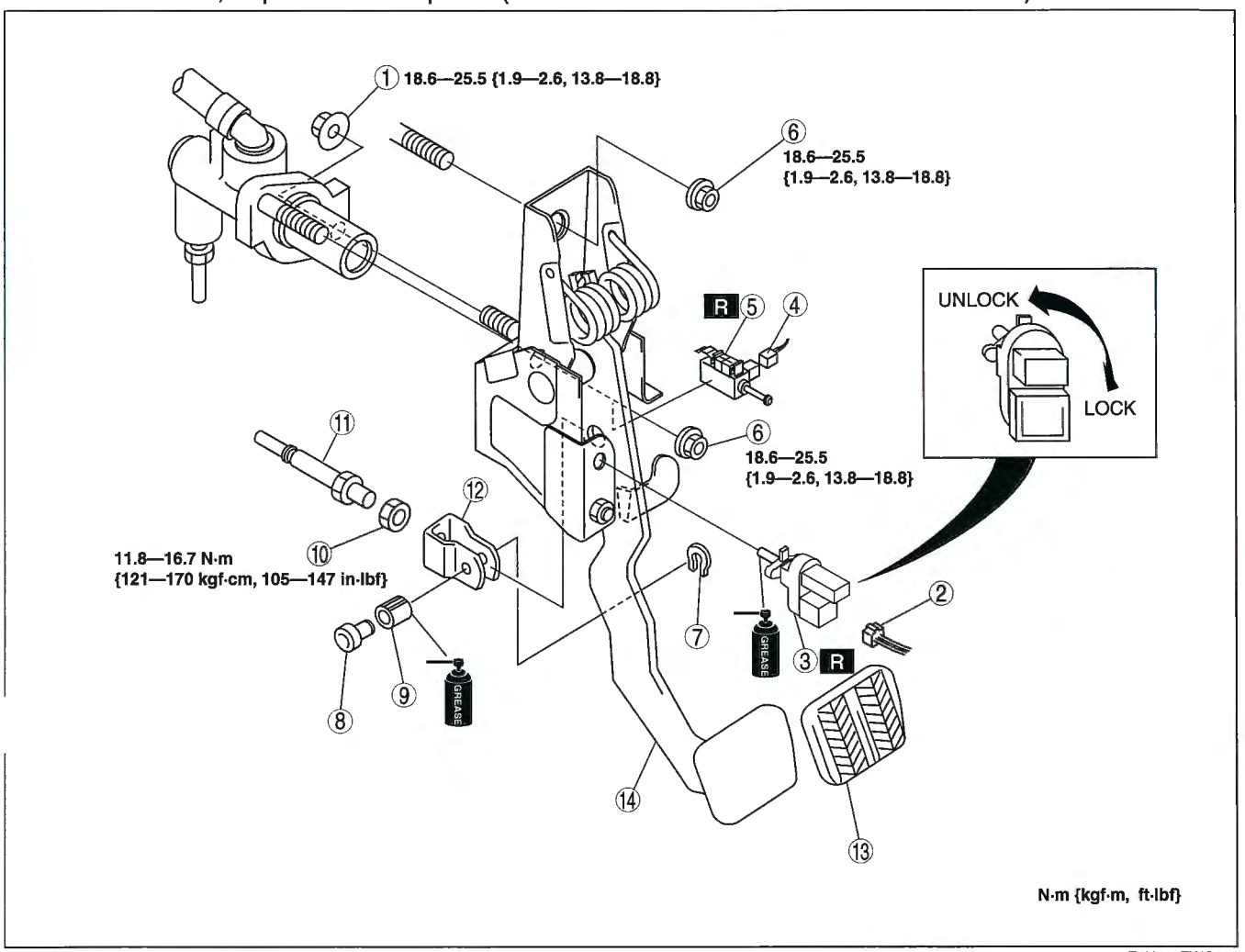

E6U510ZWC010

1	Nut
2	Clutch switch connector
3	Clutch switch
4	Starter interlock switch connector
5	Starter interlock switch (See 05–10–10 Starter Interlock Switch Installation Note)
6	Nut
7	E-clip

8	Pin
9	Bushing
10	Nut
11	Push rod
12	Clevis
13	Pedal pad
14	Clutch pedal (See 05–10–10 Clutch Pedal Installation Note)

Clutch Pedal Installation Note

1. After installation, adjust the pedal height and free play. (See 05–10–5 CLUTCH PEDAL ADJUSTMENT.)

Starter Interlock Switch Installation Note

1. Insert the starter interlock switch into the hole in the pedal bracket in the direction indicated by A.
2. Slide the starter interlock switch press it in the direction indicated by B until locked.
3. Press the clutch pedal fully in the direction indicated by C and adjust the starter interlock switch terminal.

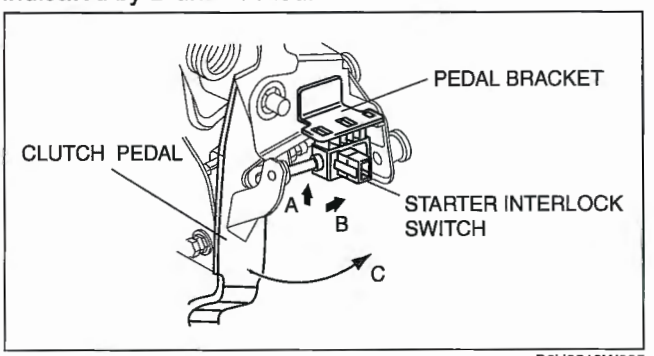

B6U0510W005

CLUTCH MASTER CYLINDER REMOVAL/INSTALLATION [G35M-R, A65M-R]

E6U051041990W01

1. Remove the battery and battery tray.
2. Remove in the order indicated in the table.
3. Plug the clutch pipe after removing it to avoid leakage.
4. Install in the reverse order of removal.

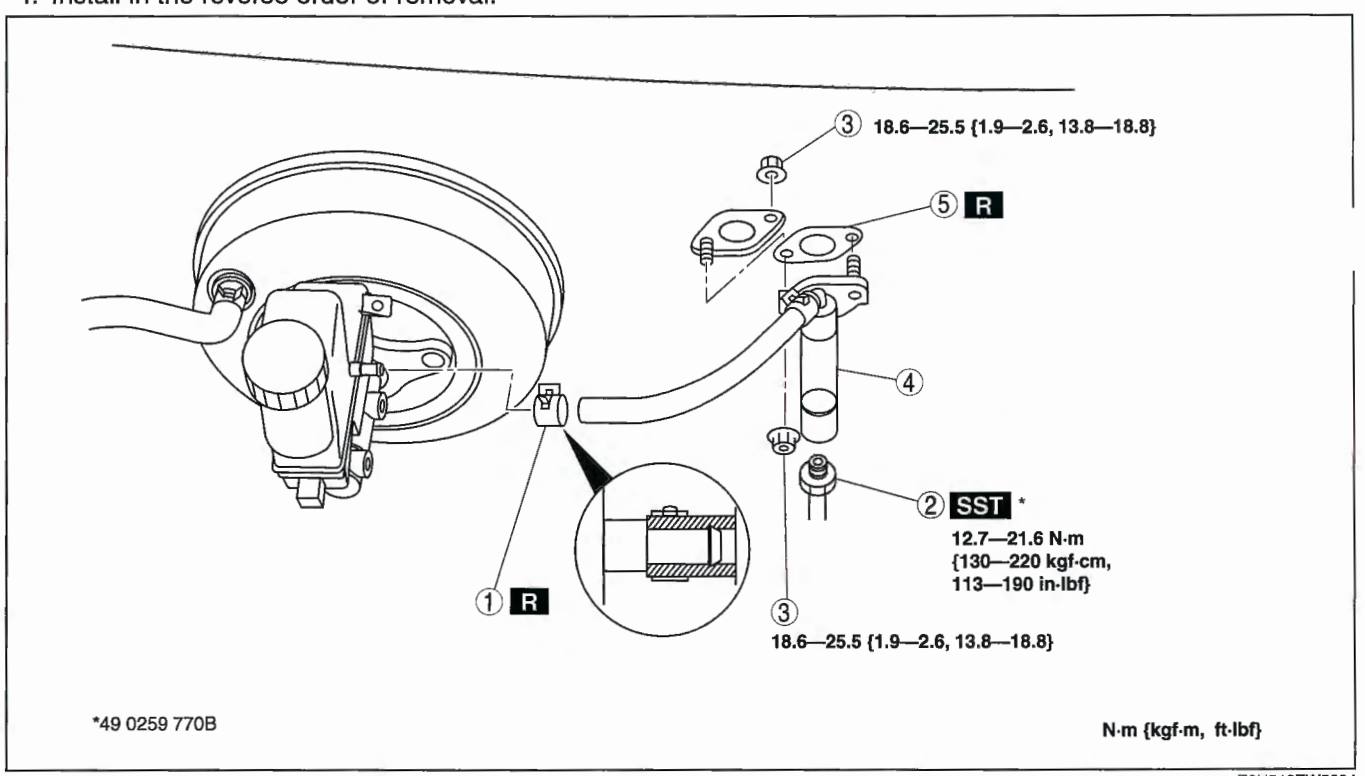

E6U510ZW5004

1	Clip
2	Clutch pipe
3	Nut

4	Clutch master cylinder
5	Gasket

CLUTCH MASTER CYLINDER REMOVAL/INSTALLATION [A26MX-R]

E6U051041990W05

1. Remove the battery and battery tray.
2. Remove in the order indicated in the table.
   Plug the clutch pipe after removing it to avoid leakage.
+. Install in the reverse order of removal.

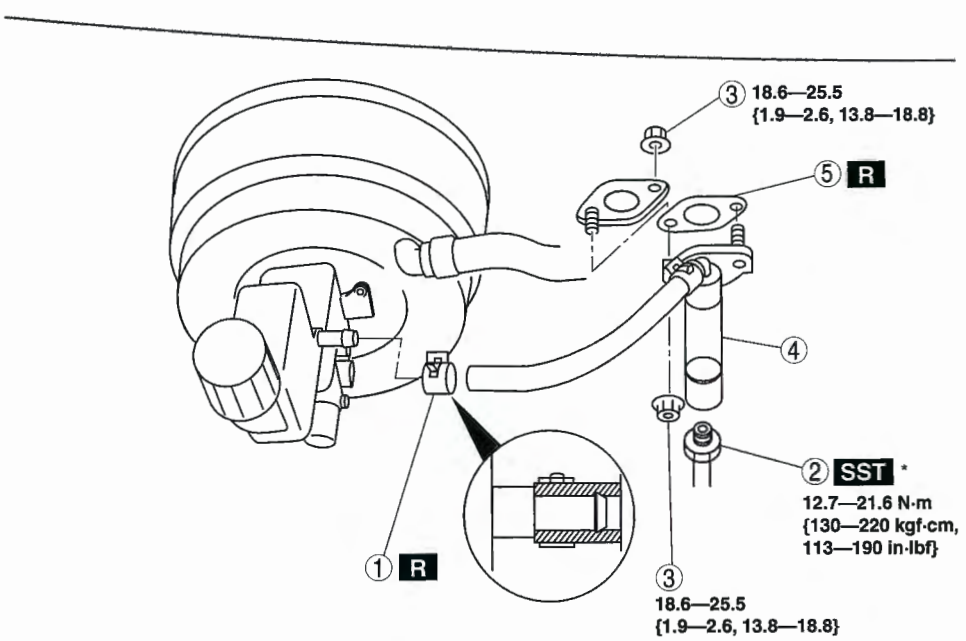

E6U510ZWC005

1	Clip
2	Clutch pipe
3	Nut

4	Clutch master cylinder
5	Gasket

CLUTCH MASTER CYLINDER DISASSEMBLY/ASSEMBLY [G35M-R, A65M-R]

E6U051041990W02

1. Disassemble in the order indicated in the table.
2. Assemble in the reverse order of disassembly.

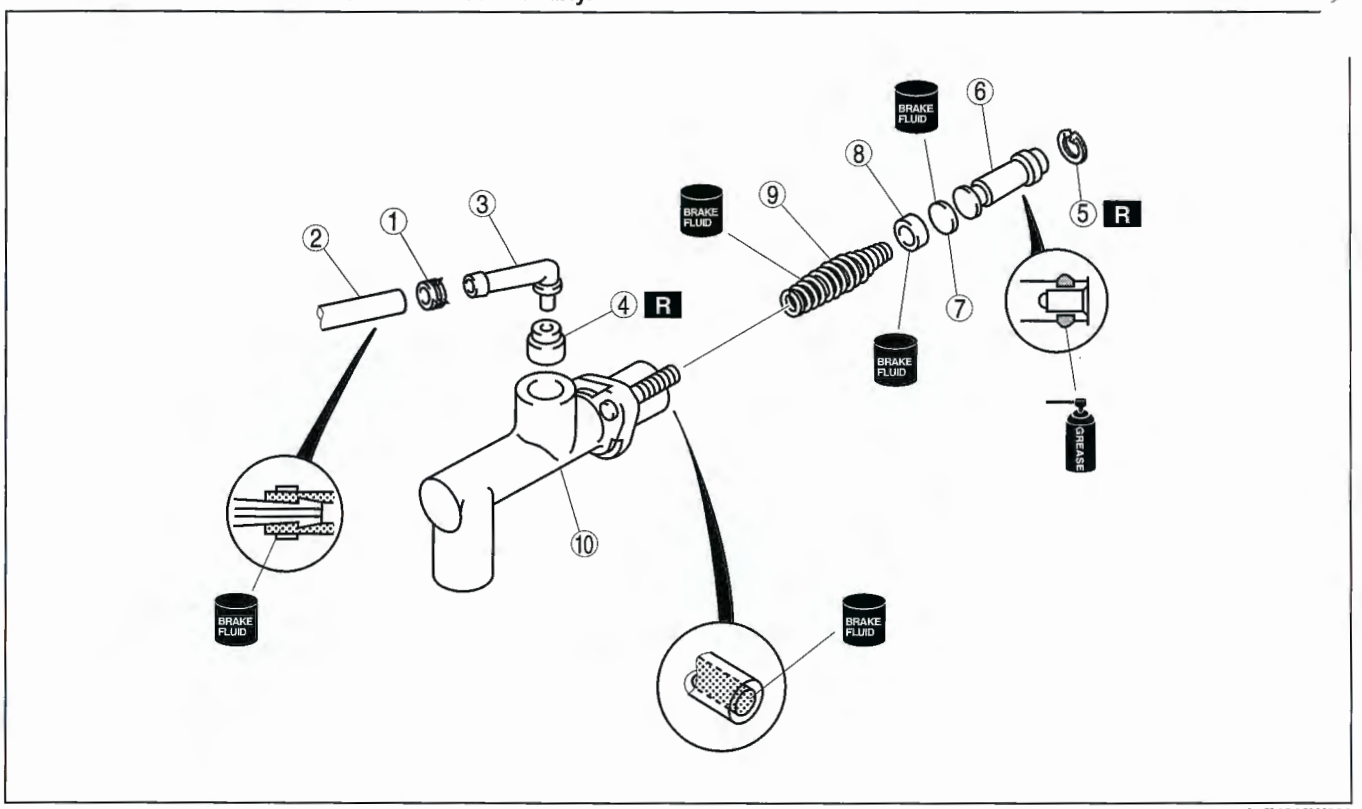

A6E4916W002

1	Clip
2	Hose
3	Joint
4	Bushing
5	Snap ring (See 05–10–12 Snap Ring Disassembly/Assembly Note.)
6	Piston and secondary cap component
7	Spacer
8	Primary cap
9	Return spring
10	Clutch master cylinder body

Snap Ring Disassembly/Assembly Note

1. Hold the piston down using a cloth-wrapped pin punch.
   - If disassembling, remove the snap ring; if assembling, install it.

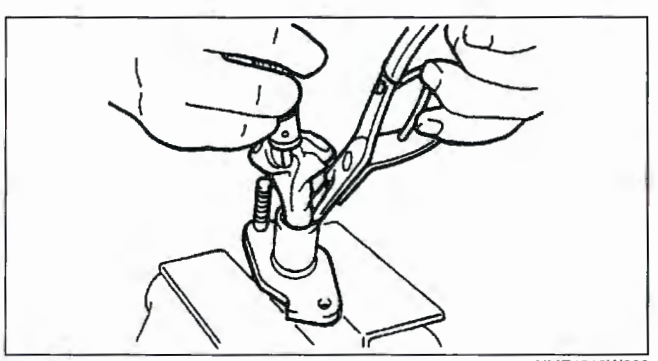

XME4916W003

CLUTCH MASTER CYLINDER DISASSEMBLY/ASSEMBLY [A26MX-R]

E6U051041990W06

1. Disassemble in the order indicated in the table.
2. Assemble in the reverse order of disassembly.

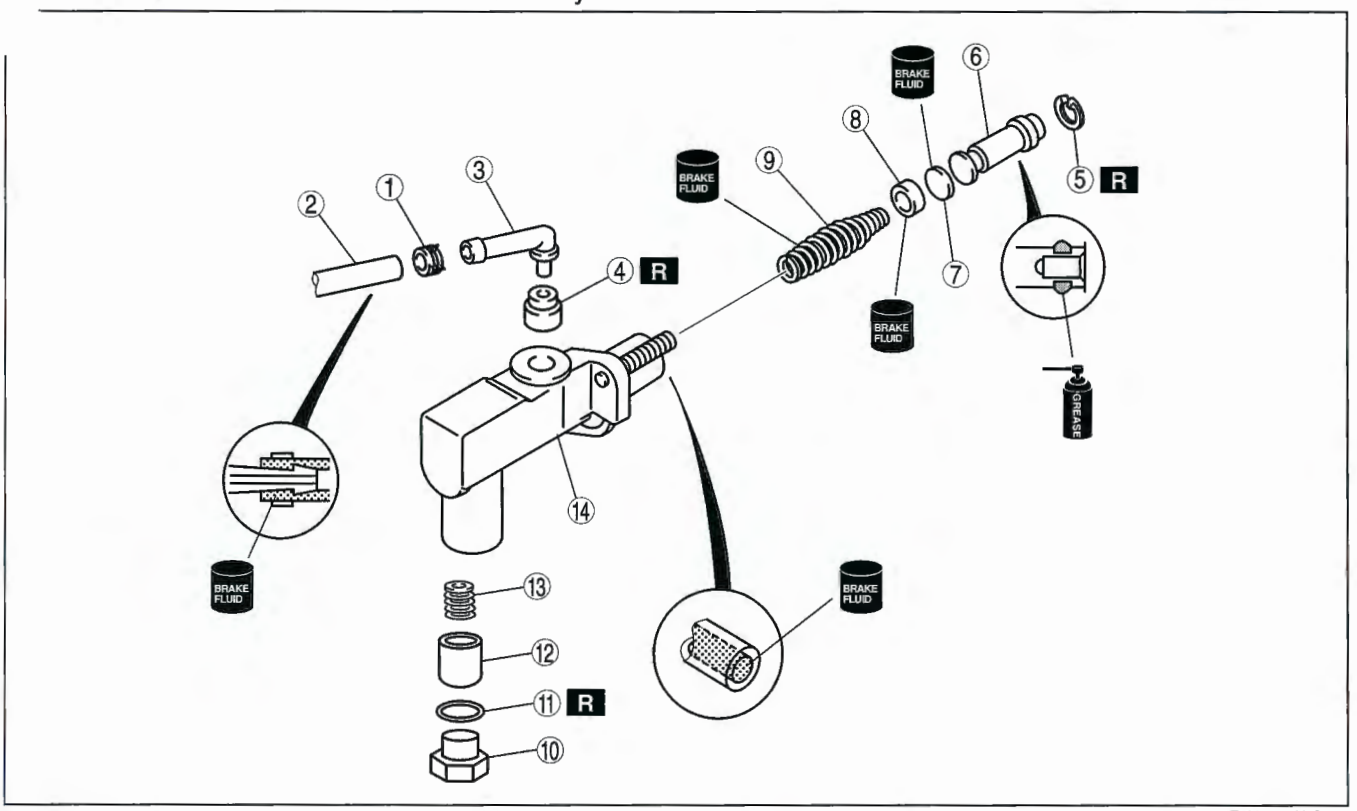

E6U510ZWC006

1	Clip
2	Hose
3	Joint
4	Bushing
5	Snap ring (See 05–10–13 Snap Ring Disassembly/Assembly Note)
6	Piston and secondary cap component

7	Spacer
8	Primary cap
9	Return spring
10	Joint bolt
11	Gasket
12	One-way valve piston
13	One-way valve spring
14	Clutch master cylinder body

Snap Ring Disassembly/Assembly Note

1. Hold the piston down using a cloth-wrapped pin punch.
   - If disassembling, remove the snap ring; if assembling, install it.

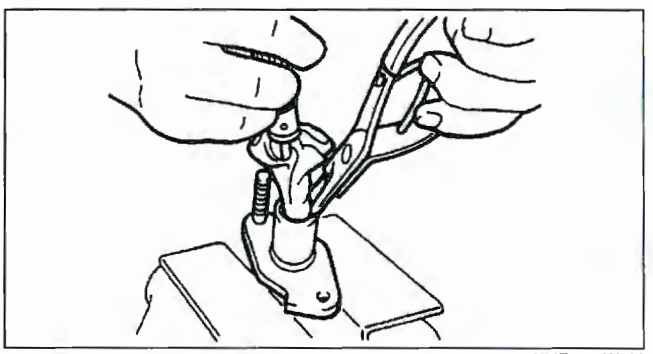

XME4916W003

CLUTCH RELEASE CYLINDER REMOVAL/INSTALLATION [G35M-R, A65M-R]

E6U051041920W01

1. Remove the under cover.
2. Remove in the order indicated in the table.
3. Install in the reverse order of removal.

G35M-R manual transaxle models

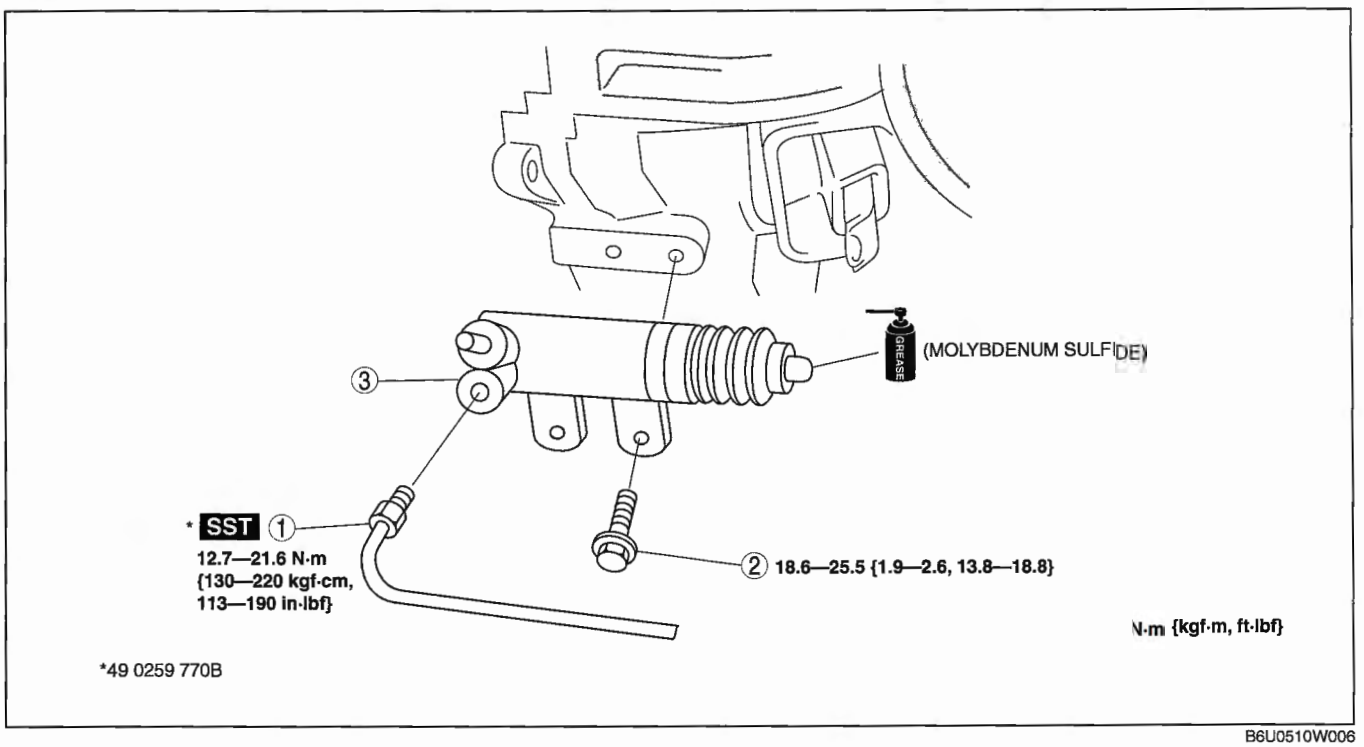

B6U0510W006

1	Clutch pipe	3	Clutch release cylinder
2	Bolt		

A65M-R manual transaxle models

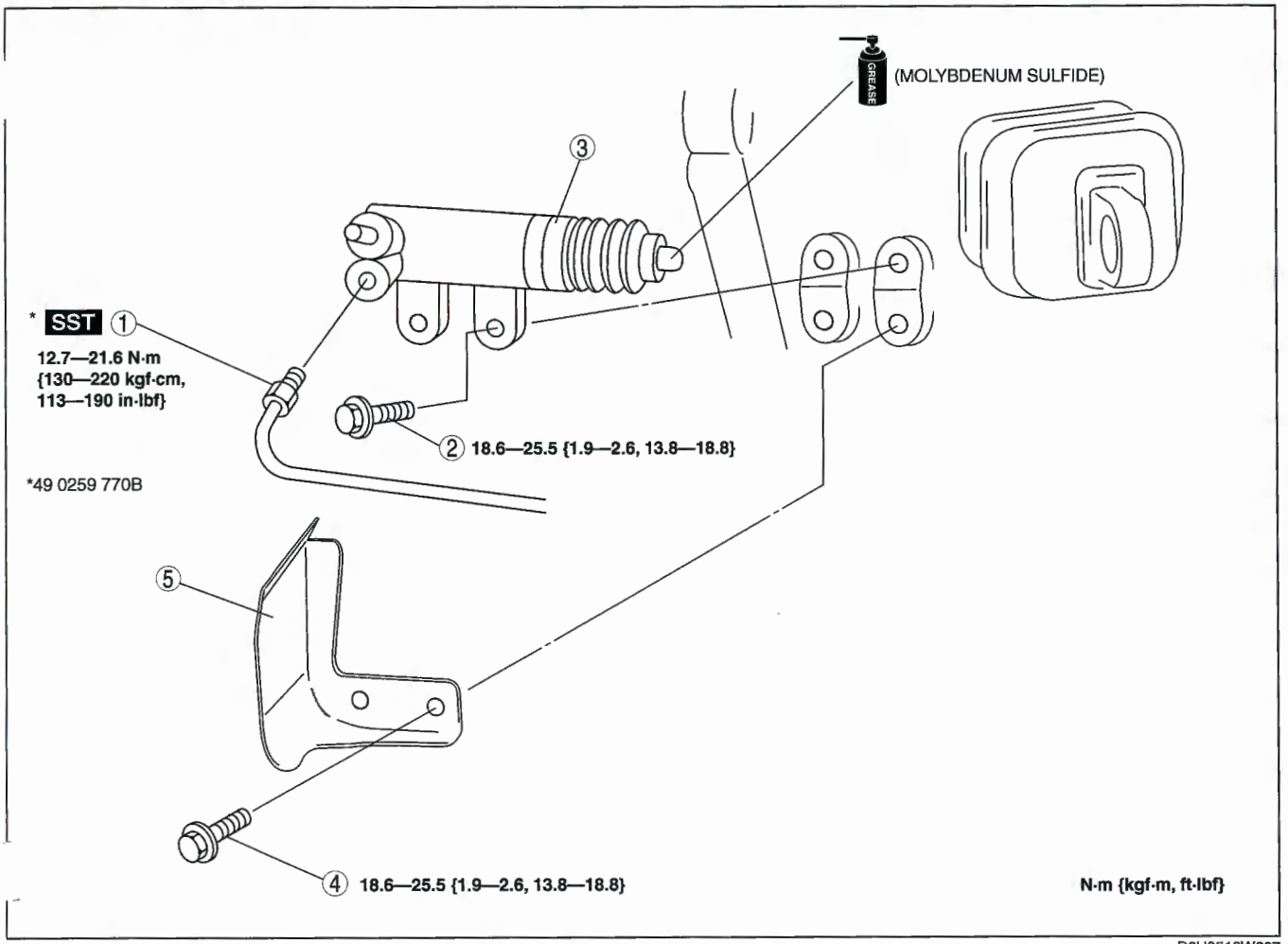

B6U0510W007

1	Clutch pipe
2	Bolt
3	Clutch release cylinder

4	Bolt
5	Insulator

CLUTCH RELEASE CYLINDER REMOVAL/INSTALLATION [A26MX-R]

E6U051041920W05

1. Remove the under cover.
2. Remove in the order indicated in the table.
3. Install in the reverse order of removal.

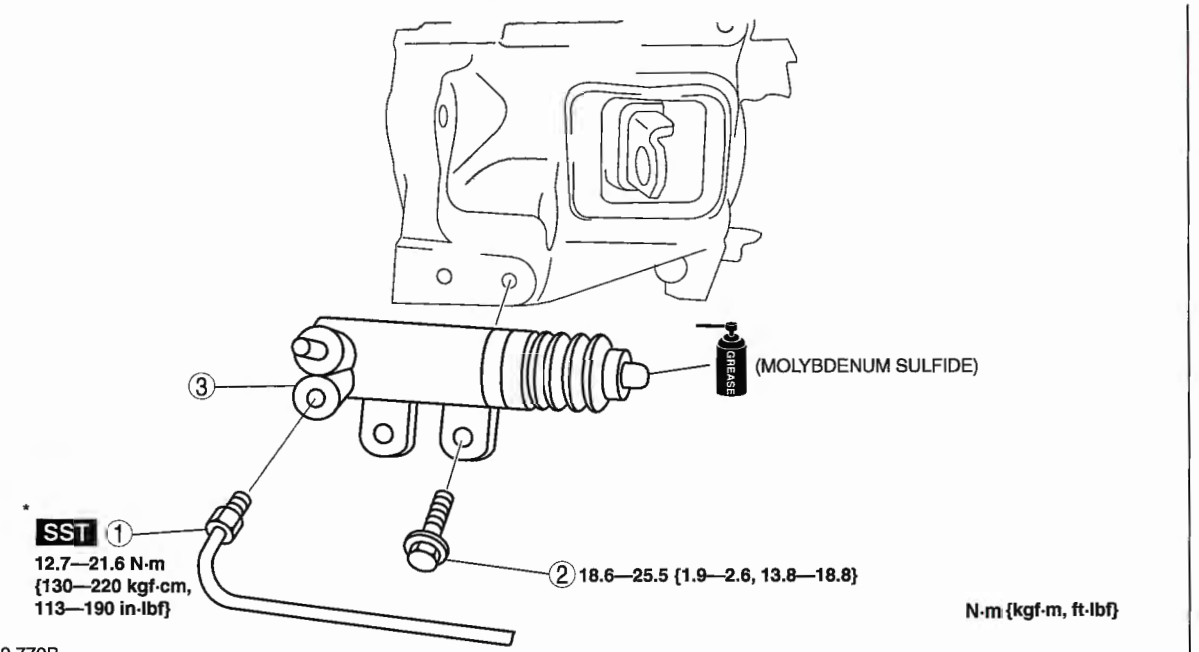

E6U510ZWC011

1	Clutch pipe
2	Bolt
3	Clutch release cylinder

CLUTCH RELEASE CYLINDER DISASSEMBLY/ASSEMBLY [G35M-R, A65M-R]

E6U0510419200W02

1. Disassemble in the order indicated in the table.
2. Assemble in the reverse order of disassembly.

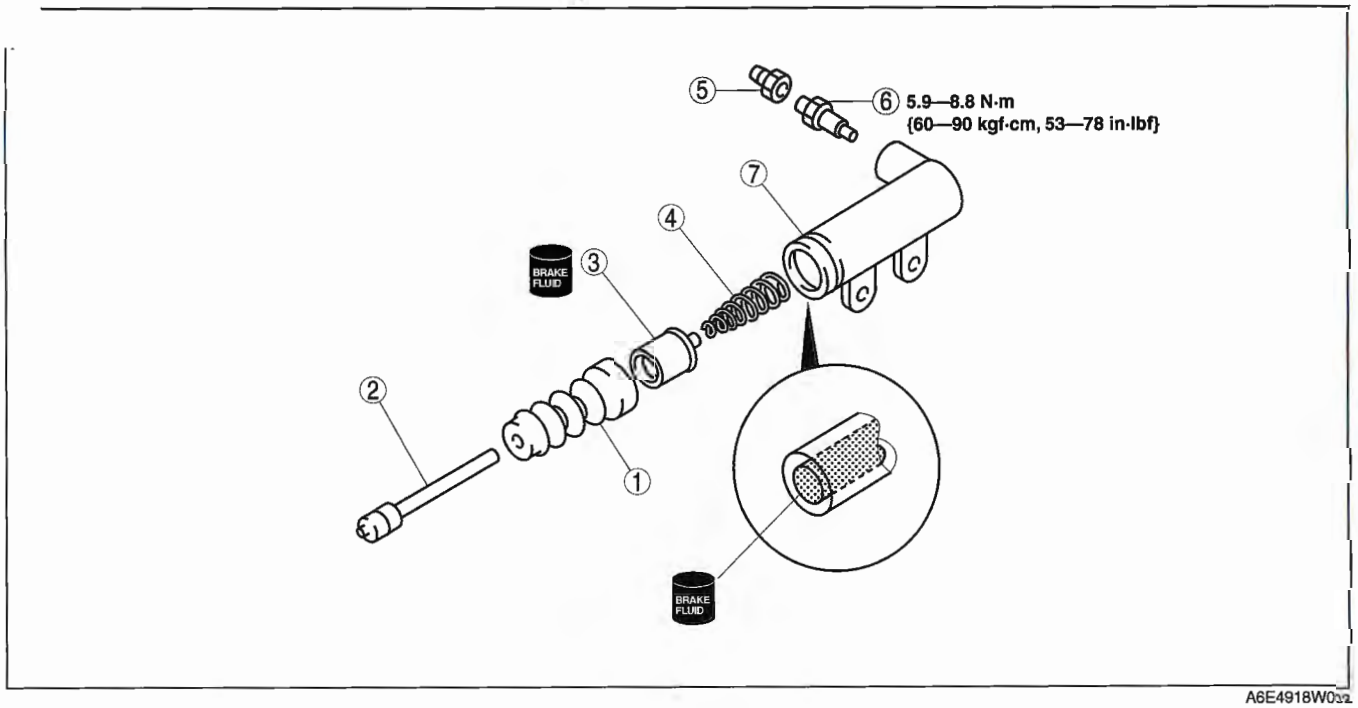

A6E4918W032

1	Boot
2	Push rod
3	Piston and cap
4	Return spring

5	Bleeder cap
6	Bleeder screw
7	Release cylinder body

CLUTCH RELEASE CYLINDER DISASSEMBLY/ASSEMBLY [A26MX-R]

E6U051041920W06

1. Disassemble in the order indicated in the table.
2. Assemble in the reverse order of disassembly.

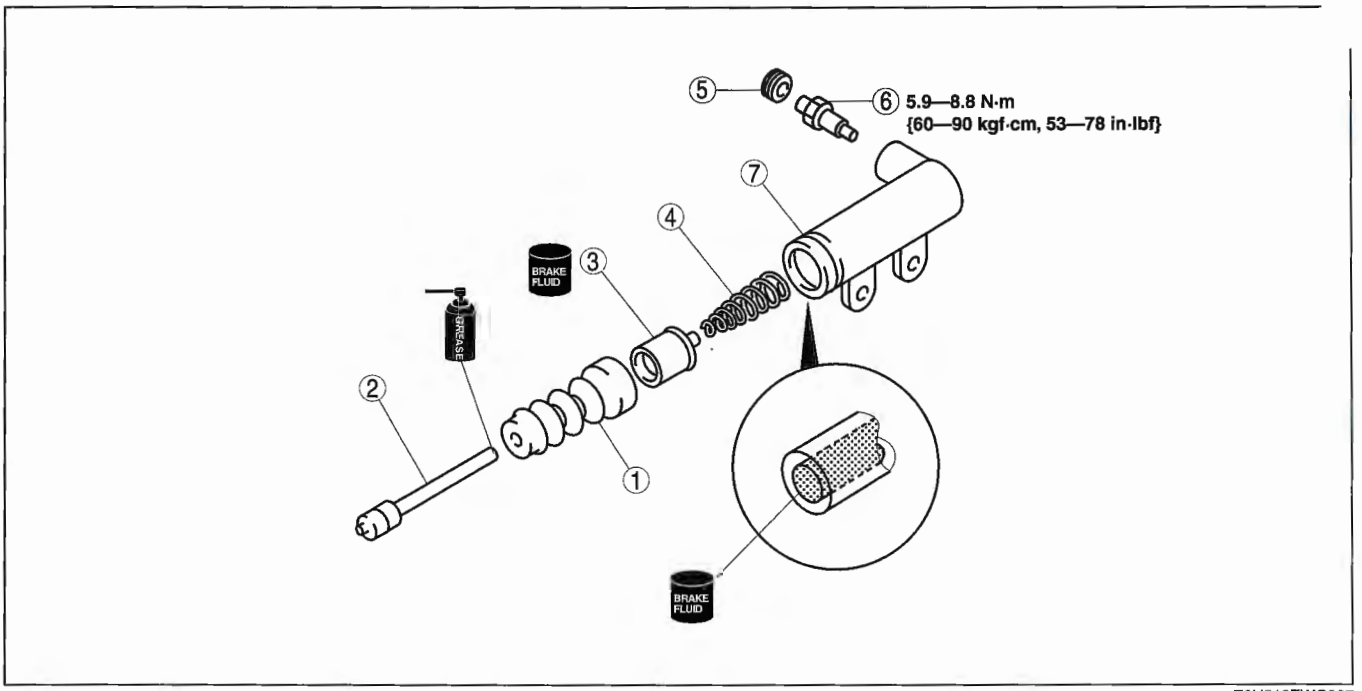

E6U510ZWC007

1	Boot
2	Push rod
3	Piston and cap
4	Return spring

5	Bleeder cap
6	Bleeder screw
7	Release cylinder body

CLUTCH UNIT REMOVAL/INSTALLATION [G35M-R, A65M-R]

E6U051016000W01

1. Remove in the order indicated in the table.
2. Install in the reverse order removal.

5M-R manual transaxle models

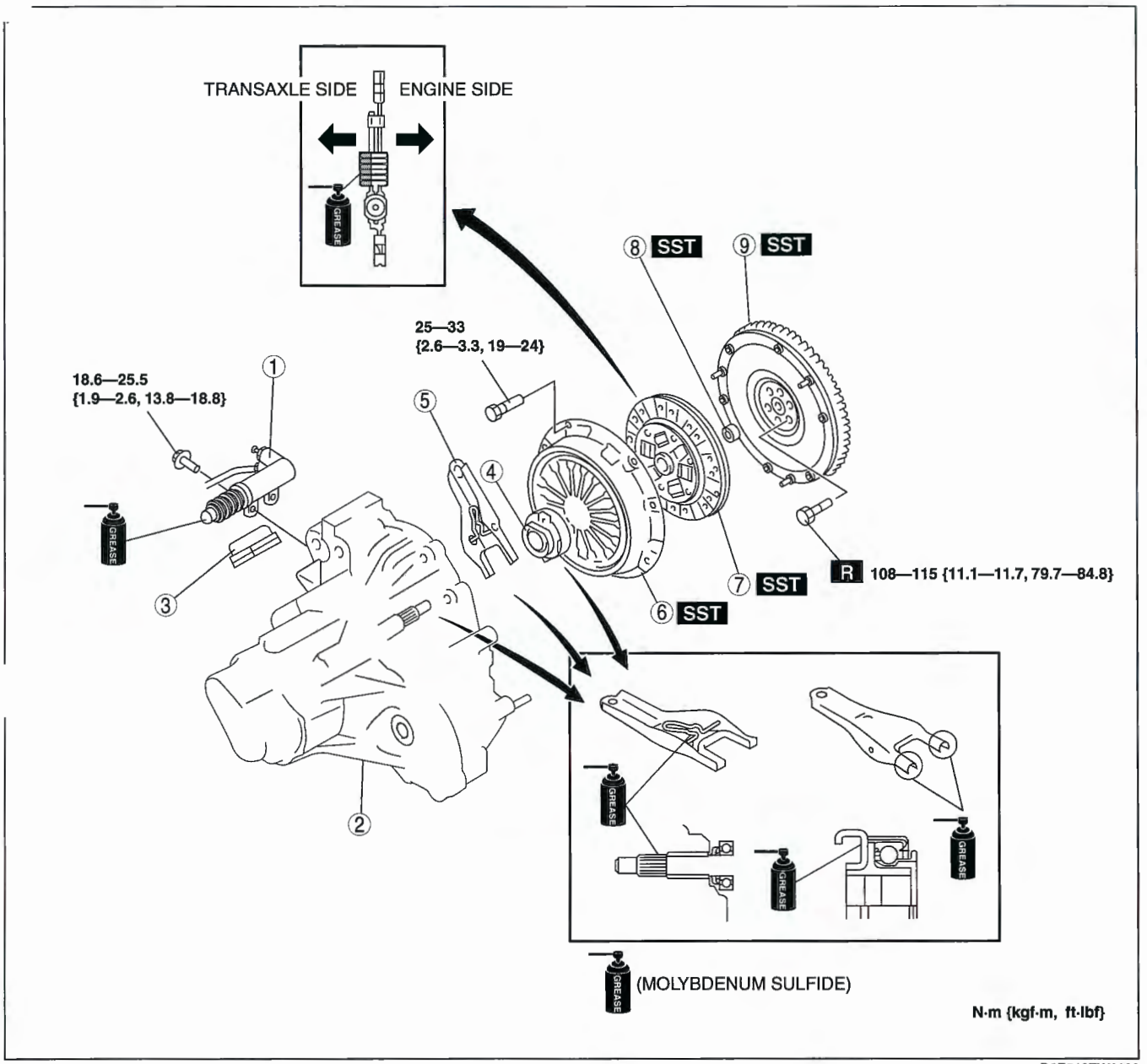

D6E510ZW3003

1	Clutch release cylinder
2	Manual transaxle (See 05–15A–4 MANUAL TRANSAXLE REMOVAL/INSTALLATION [G35M-R].)
3	Boot
4	Clutch release collar
5	Clutch release fork
6	Clutch cover (See 05–10–21 Clutch Cover and Disc Removal Note.) (See 05–10–24 Clutch Cover Installation Note.)

7	Clutch disc (See 05–10–21 Clutch Cover and Disc Removal Note.) (See 05–10–23 Clutch Disc Installation Note.)
8	Pilot bearing (See 05–10–21 Pilot Bearing Removal Note.) (See 05–10–23 Pilot Bearing Installation Note.)
9	Flywheel (See 05–10–22 Flywheel Removal Note.) (See 05–10–22 Flywheel Installation Note.)

A65M-R manual transaxle models

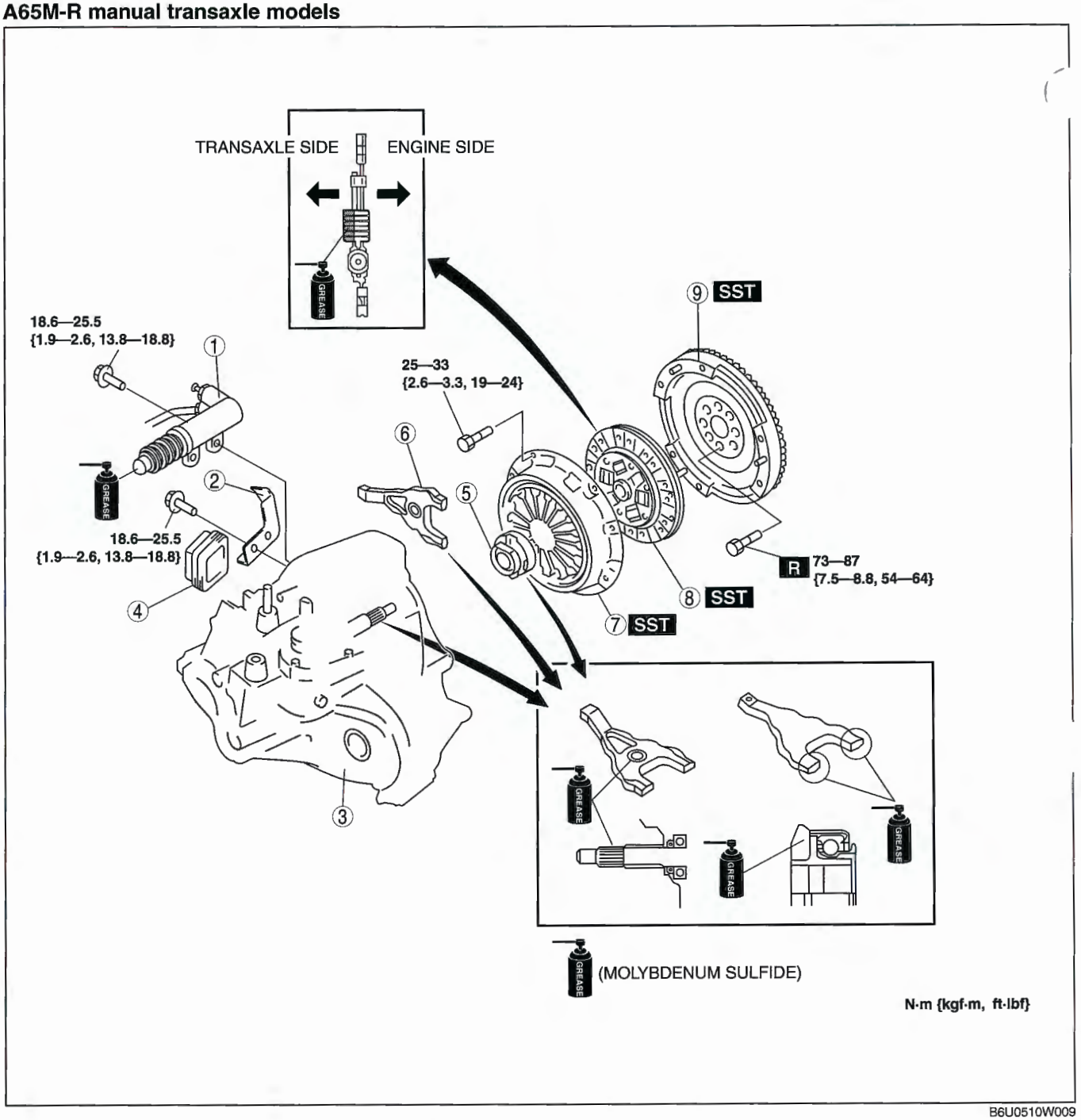

B6U0510W009

1	Clutch release cylinder
2	Insulator
3	Manual transaxle (See 05–15B–5 MANUAL TRANSAXLE REMOVAL/INSTALLATION [A65M-R].)
4	Boot
5	Clutch release collar
6	Clutch release fork

7	Clutch cover (See 05–10–21 Clutch Cover and Disc Removal Note.) (See 05–10–24 Clutch Cover Installation Note.)
8	Clutch disc (See 05–10–21 Clutch Cover and Disc Removal Note.) (See 05–10–23 Clutch Disc Installation Note.)
9	Flywheel (See 05–10–22 Flywheel Removal Note.) (See 05–10–22 Flywheel Installation Note.)

Clutch Cover and Disc Removal Note
G35M-R manual transaxle models

1. Install the **SSTs.**
   Loosen each bolt one turn at a time in a crisscross pattern until spring tension is released.
2. Remove the clutch cover and disc.

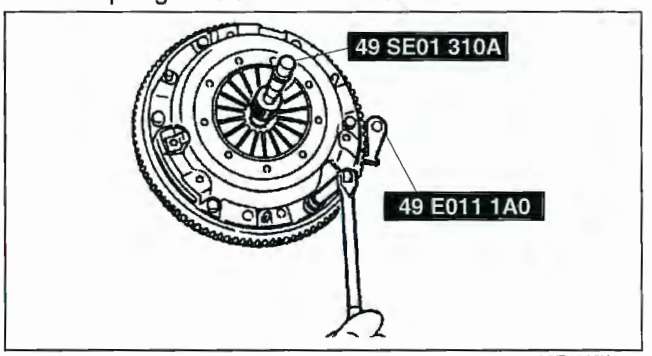

A6E4920W002

A65M-R manual transaxle models

1. Install the clutch aligner and the **SST.**
2. Loosen each bolt one turn at a time in a crisscross pattern until spring tension is released.
3. Remove the clutch cover and disc.

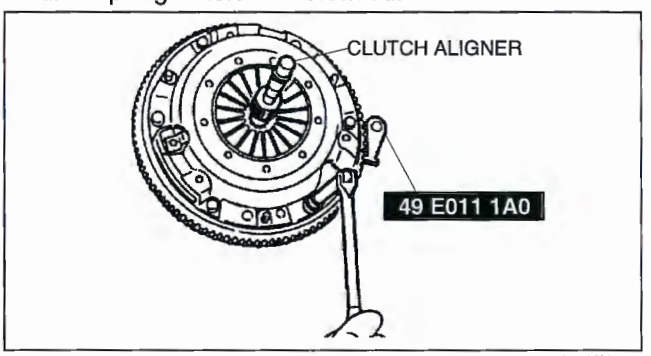

B6U0510W014

Pilot Bearing Removal Note

Note
- The pilot bearing does not need to be removed unless you are replacing it.

1. Use the **SST** to remove the pilot bearing.

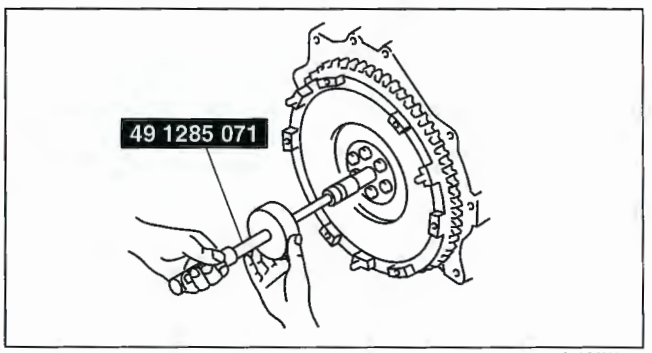

ADJ4920W005

Flywheel Removal Note

1. Hold the flywheel using the **SST**.
2. Remove the bolts evenly and gradually in a crisscross pattern.
3. Remove the flywheel.

G35M-R manual transaxle models

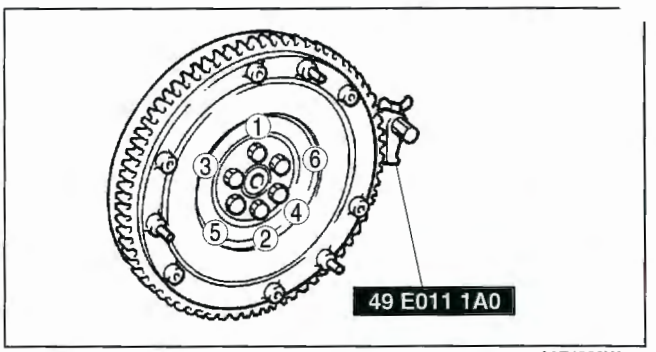

A6E4920W003

A65M-R manual transaxle models

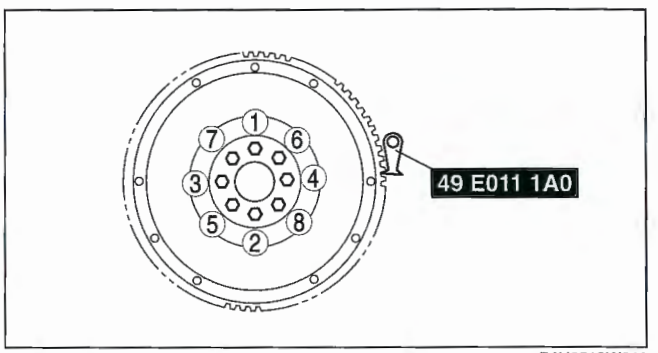

B6U0510W010

Flywheel Installation Note

1. Clean the crankshaft thread holes.
2. Install the flywheel to the crankshaft.
3. Hand-tighten the new flywheel lock bolts.
4. Install the **SST** to the flywheel.

G35M-R manual transaxle models

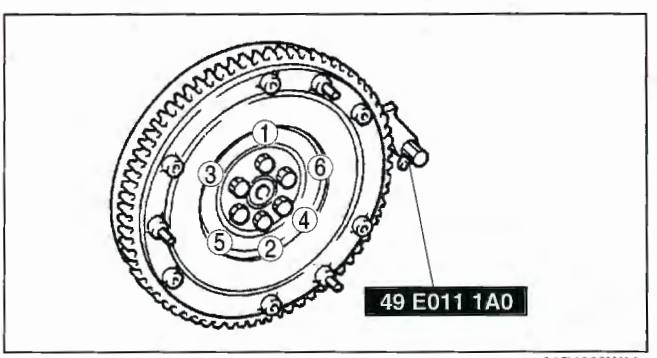

A6E4920W004

A65M-R manual transaxle models

5. Gradually tighten the flywheel lock bolts in a crisscross pattern.

Tightening torque

G35M-R manual transaxle models

108—115 N·m {11.1—11.7 kgf·m, 79.7—84.8 ft·lbf}

A65M-R manual transaxle models

73—87 N·m {7.5—8.8 kgf·m, 54—64 ft·lbf}

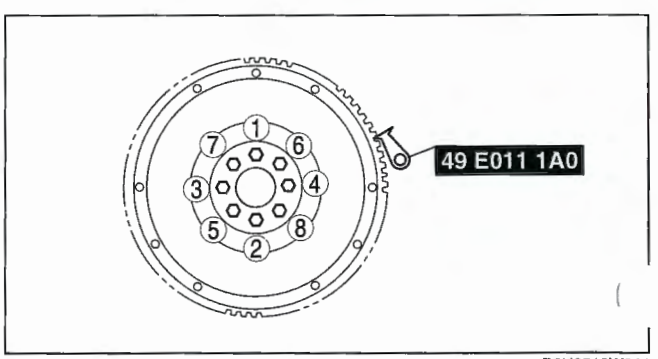

B6U0510W011

Pilot Bearing Installation Note

1. Use the **SSTs** to install the pilot bearing.

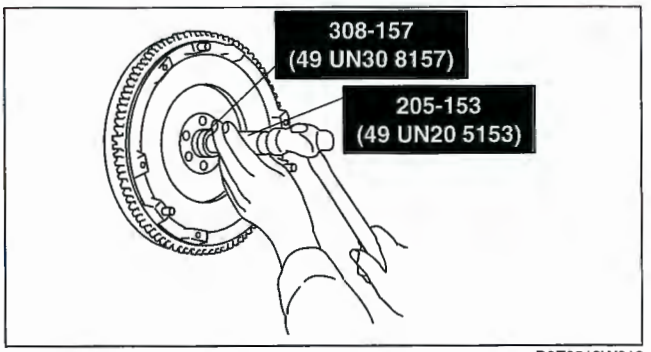

B3E0510W012

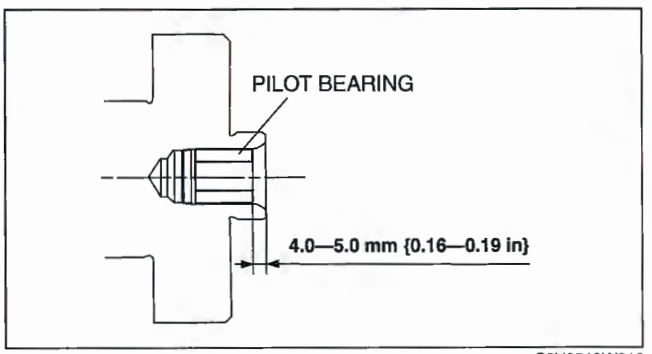

C3U0510W013

Clutch Disc Installation Note

G35M-R manual transaxle models

1. Hold the clutch disc position using the **SST**.

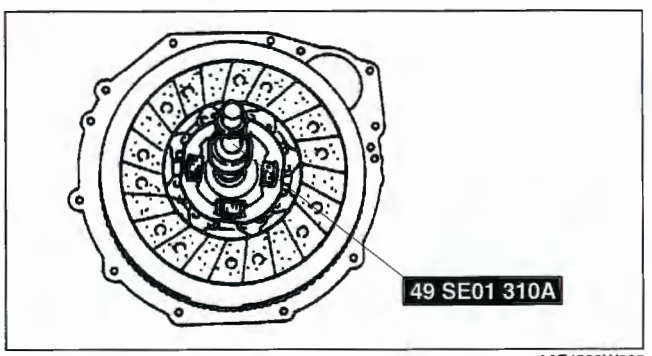

A6E4920W005

A65M-R manual transaxle models

1. Hold the clutch disc position using the clutch aligner.

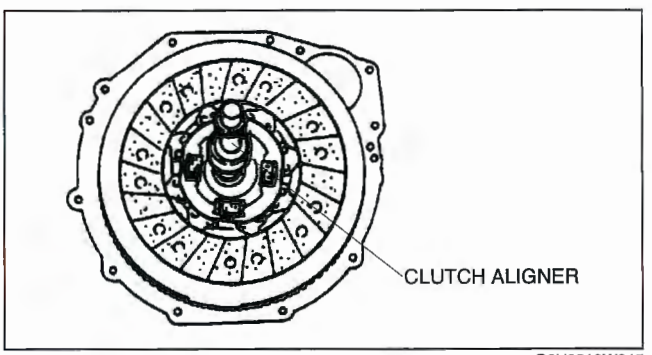

B6U0510W015

Clutch Cover Installation Note
G35M-R manual transaxle models

1. Install the **SSTs**.
2. Tighten the bolts evenly and gradually in a crisscross pattern.

Tightening torque
25—33 N·m {2.6—3.3 kgf·m, 19—24 ft·lbf}

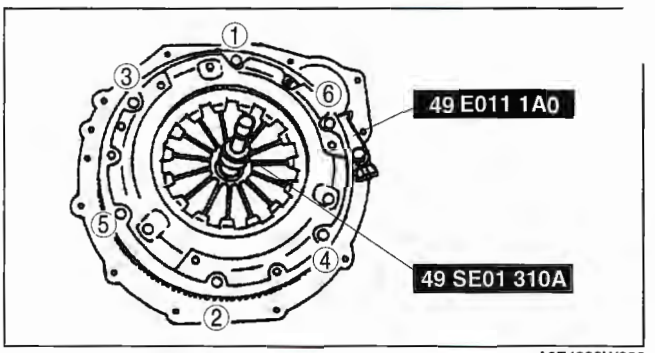

A6E4920W006

A65M-R manual transaxle models

1. Install the clutch aligner and the **SST**.
2. Tighten the bolts evenly and gradually in a crisscross pattern.

Tightening torque
25—33 N·m {2.6—3.3 kgf·m, 19—24 ft·lbf}

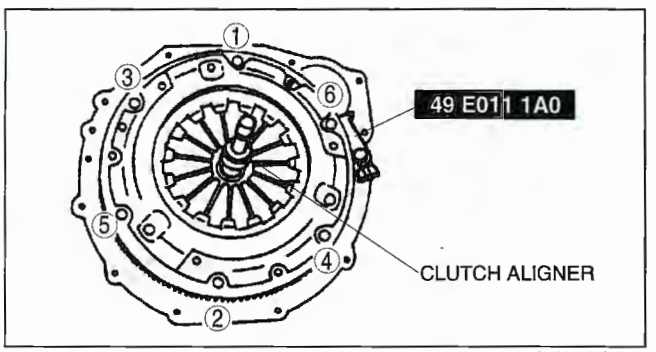

B6U0510W01

CLUTCH UNIT REMOVAL/INSTALLATION [A26MX-R]

E6U051016000W03

1. Remove in the order indicated in the table.
2. Install in the reverse order removal.

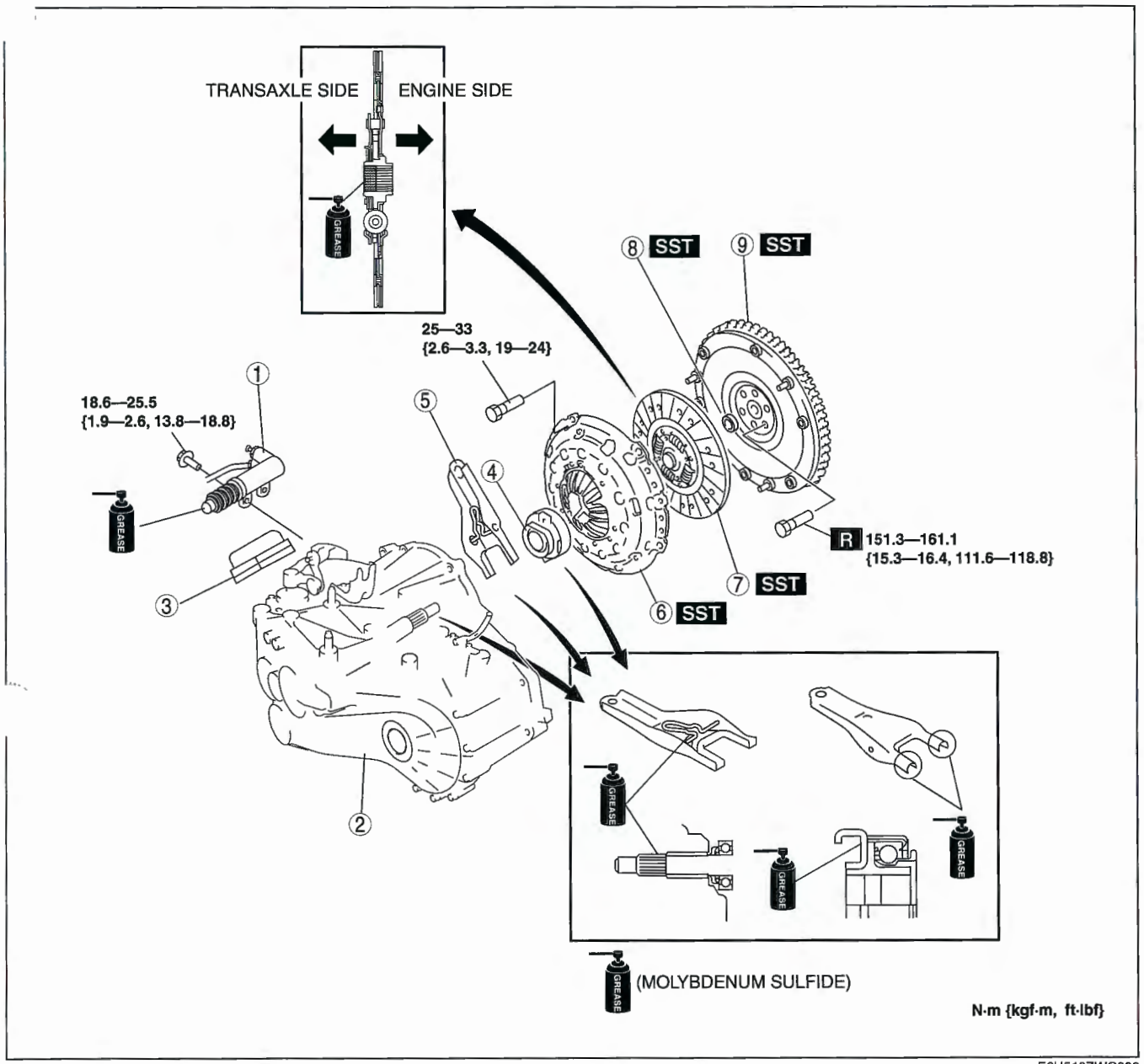

E6U510ZWC002

1	Clutch release cylinder
2	Manual transaxle (See 05–15C–4 MANUAL TRANSAXLE REMOVAL/INSTALLATION [A26MX-R])
3	Boot
4	Clutch release collar
5	Clutch release fork
6	Clutch cover (See 05–10–26 Clutch Cover and Disc Removal Note) (See 05–10–28 Clutch Cover Installation Note)

7	Clutch disc (See 05–10–26 Clutch Cover and Disc Removal Note) (See 05–10–28 Clutch Disc Installation Note)
8	Pilot bearing (See 05–10–26 Pilot Bearing Removal Note.) (See 05–10–27 Pilot Bearing Installation Note.)
9	Flywheel (See 05–10–27 Flywheel Removal Note) (See 05–10–28 Flywheel Installation Note)

Clutch Cover and Disc Removal Note

Caution
- **When replacing components, always replace as a complete set.**
- **Due to the automatic adjustment function of clutch cover, if the old cover assembly is reused, it must be reinstalled together with its original clutch disc.**

1. Install the **SSTs**.
2. Loosen each bolt one turn at a time in a crisscross pattern until spring tension is released.
3. Remove the clutch cover and disc.

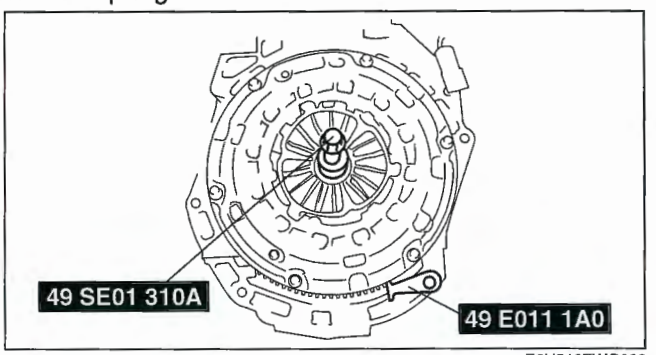

E6U510ZWC003

Pilot Bearing Removal Note

Note
- The pilot bearing does not need to be removed unless you are replacing it.

1. Use the **SST** to remove the pilot bearing.

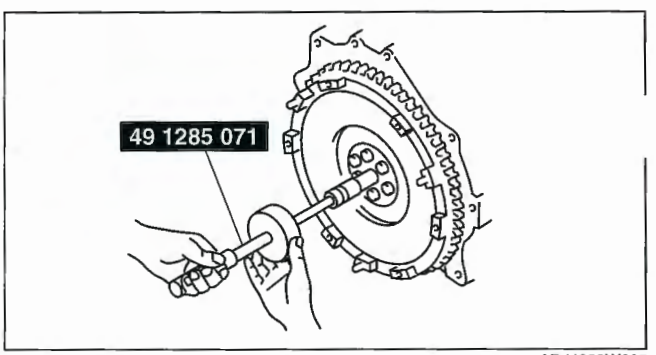

ADJ4920W005

Pilot Bearing Installation Note

1. Use the **SSTs** to install the pilot bearing.

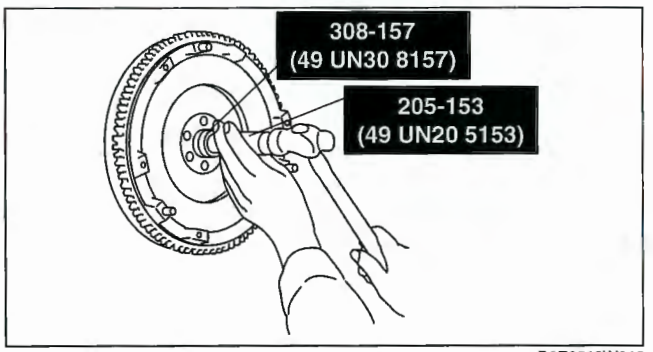

B3E0510W012

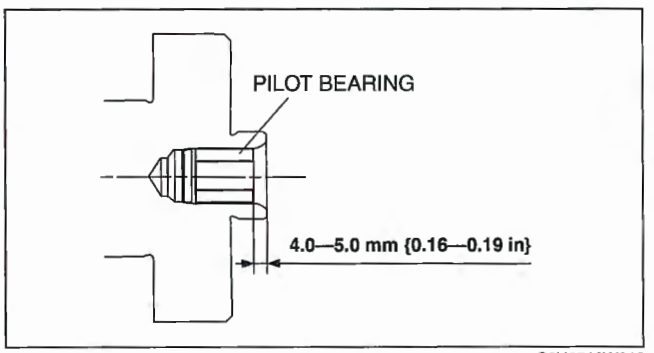

C3U0510W013

Flywheel Removal Note

1. Hold the flywheel using the **SST**.
2. Remove the bolts evenly and gradually in a crisscross pattern.
3. Remove the flywheel.

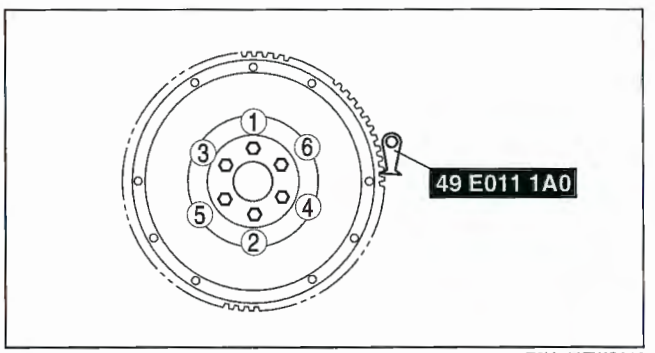

E6U510ZWC013

Flywheel Installation Note

Caution
- **Clean the crankshaft threads before tightening the bolts. The threads may be damaged if the bolt are tightened with any old sealant remaining.**

1. Clean the crankshaft thread holes.
2. Install the flywheel to the crankshaft.
3. Hand-tighten the new flywheel lock bolts.
4. Install the **SST** to the flywheel.
5. Gradually tighten the flywheel lock bolts in a crisscross pattern.

Tightening torque
151.3—161.1 N·m {15.3—16.4 kgf·m, 111.6—118.8 ft·lbf}

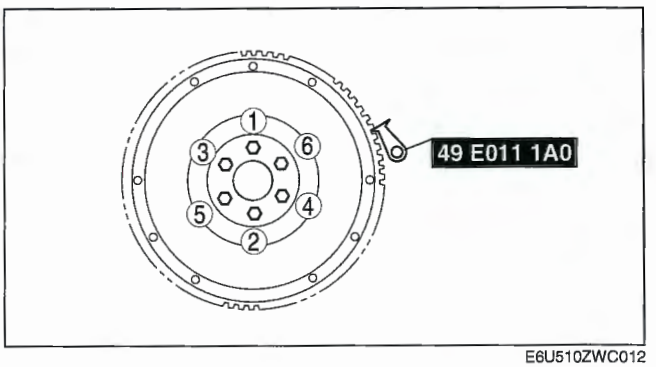

E6U510ZWC012

Clutch Disc Installation Note
1. Hold the clutch disc position using the **SST**.

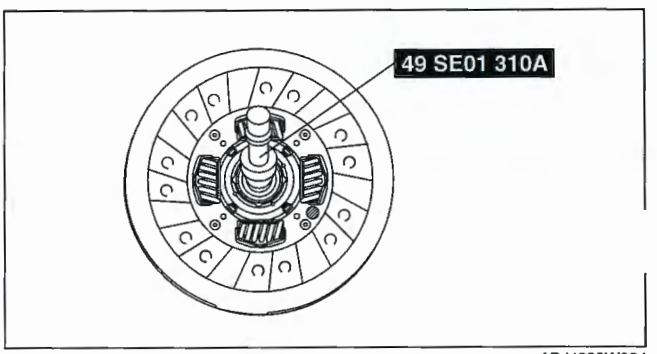

ADJ4920W004

Clutch Cover Installation Note
1. Install the **SSTs**.
2. Tighten the bolts evenly and gradually in a crisscross pattern.

Tightening torque
25—33 N·m {2.6—3.3 kgf·m, 19—24 ft·lbf}

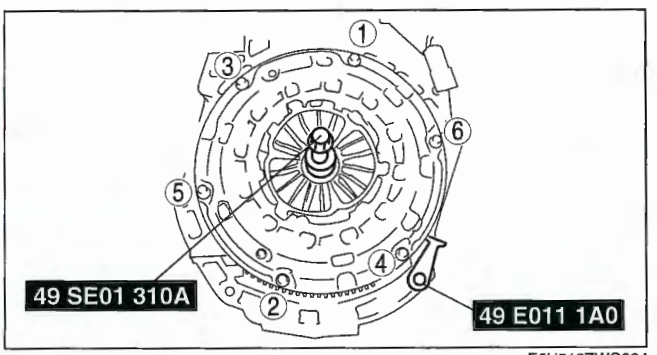

E6U510ZWC004

CLUTCH COVER INSPECTION [G35M-R, A65M-R]

E6U051016410W01

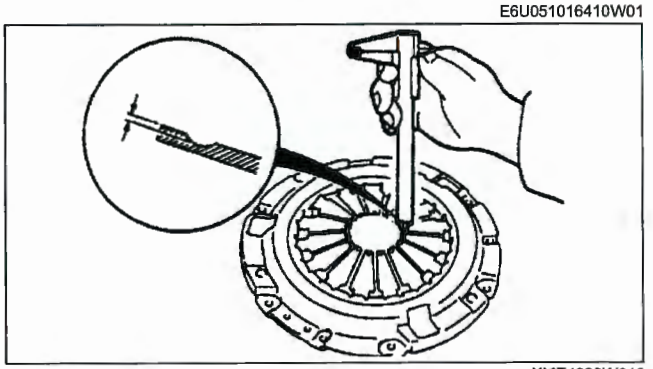

XME4920W010

1. Measure the wear of the diaphragm spring fingers.
   - If not as specified, replace the clutch cover.

   Clutch cover diaphragm spring fingers maximum depth [G35M-R, A65M-R]
   0.6 mm {0.024 in} max.

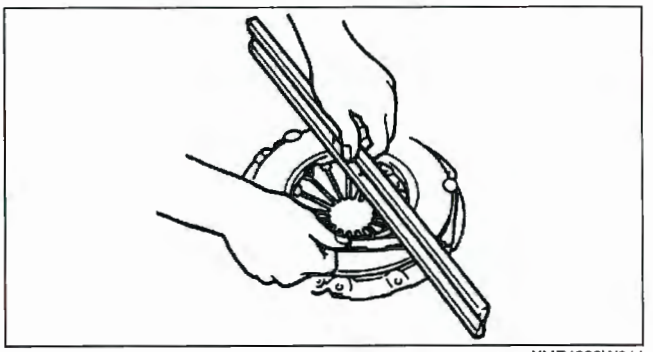

XME4920W011

2. Measure the flatness of the pressure plate with a straight edge and a feeler gauge.
   - If not as specified, replace the clutch cover.

   Maximum clearance of flatness of the pressure plate [G35M-R, A65M-R]
   0.3 mm {0.012 in} max.

3. When checking the diaphragm spring fingers, mount a dial indicator on the cylinder block.

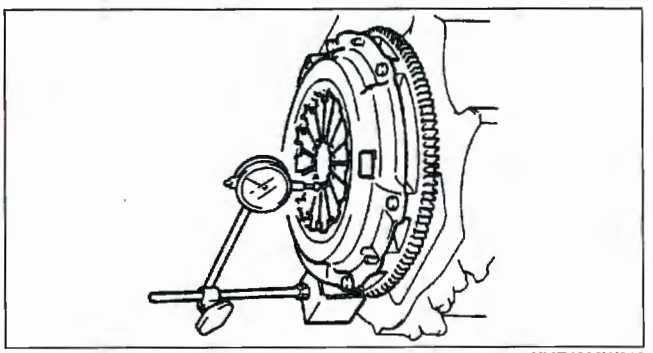

XME4920W012

4. Rotate the flywheel and check for misaligned diaphragm spring fingers.
   - If not as specified, replace the clutch cover.

   Clutch cover diaphragm spring fingers maximum misalignment [G35M-R, A65M-R]
   0.6 mm {0.024 in} max.

CLUTCH COVER INSPECTION [A26MX-R]

1. Measure the wear of the diaphragm spring fingers.
   - If it exceeds the maximum specification, replace the clutch cover.

   Clutch cover diaphragm spring fingers maximum depth [A26MX-R]
   0.6 mm {0.024 in}

E6U051016410W03

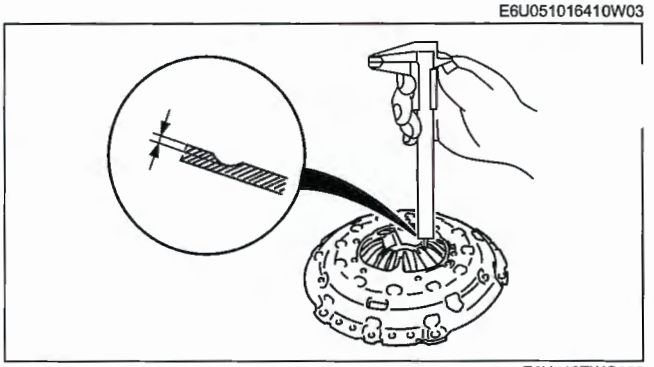

E6U510ZWC008

2. Measure the flatness of the pressure plate with a straight edge and a feeler gauge.
   - If it exceeds the maximum specification, replace the clutch cover.

   Maximum clearance of flatness of the pressure plate [A26MX-R]
   0.3 mm {0.012 in}

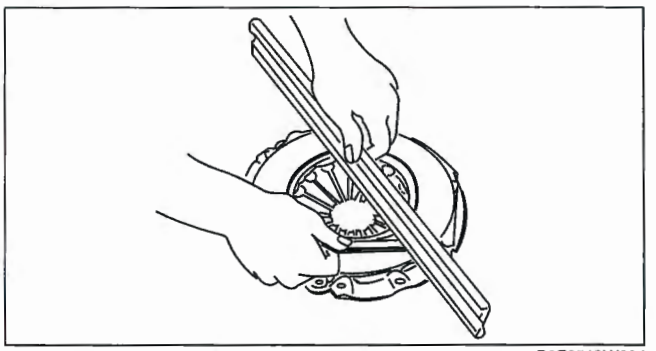

B3E0510W024

3. When checking the diaphragm spring fingers, mount a dial indicator on the cylinder block.

4. Rotate the flywheel and check for misaligned diaphragm spring fingers.
   - If it exceeds the maximum specification, replace the clutch cover.

   Clutch cover diaphragm spring fingers maximum misalignment [A26MX-R]
   1.0 mm {0.039 in}

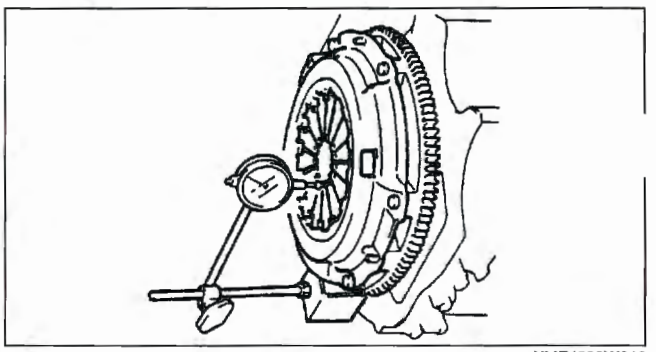

XME4920W012

CLUTCH DISC INSPECTION

E6U051016460W03

1. Using vernier calipers, measure the thickness of the lining at a rivet head on both sides.
   - If it less than the minimum specification, replace the clutch disc.

   Minimum clutch disc thickness
   0.3 mm {0.012 in}

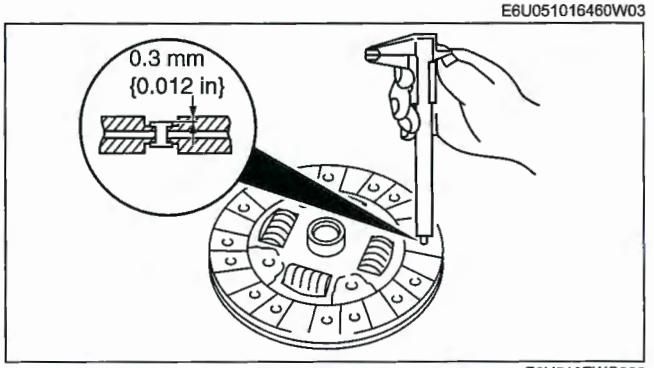

E6U510ZWC009

2. Measure the clutch disc runout using a dial indicator.
   - If it exceeds the maximum specification, replace the clutch disc.

   Maximum clutch disc runout
   0.7 mm {0.028 in}

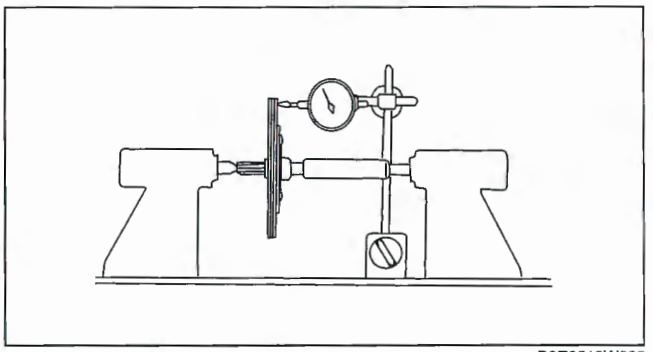

B3E0510W025

CLUTCH RELEASE COLLAR INSPECTION

E6U051016510W01

Caution
- **Cleaning the clutch release collar with cleaning fluids or a steam cleaner can wash the grease out of the sealed bearing.**

1. Turn the collar while applying force in the axial direction.
   - If the collar sticks or has excessive resistance, replace the clutch release collar.

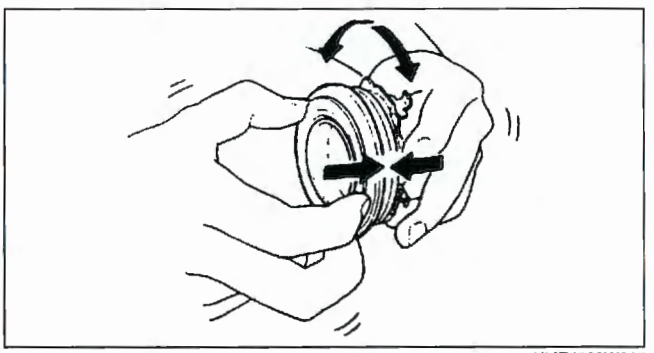

XME4920W015

PILOT BEARING INSPECTION

E6U051011501W01

1. Without removing the pilot bearing, turn the bearing while applying force in the axial direction.
   - If there is any malfunction, replace the pilot bearing.

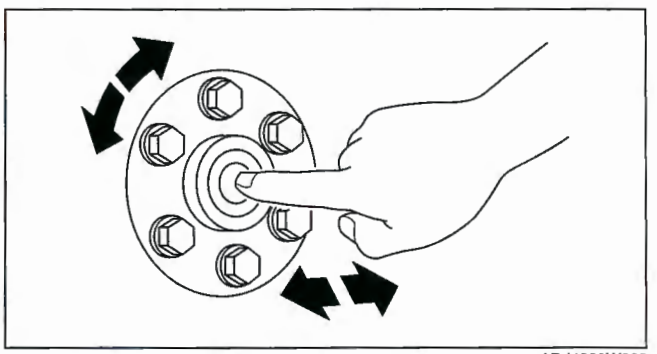

ADJ4920W002

FLYWHEEL INSPECTION [G35M-R, A65M-R]

E6U051011500W01

1. Install a dial gauge on the cylinder block.
2. Measure the flywheel runout using a dial gauge.
   - If the runout is excessive, replace the flywheel.

Flywheel runout limit [G35M-R]
0.1 mm {0.004 in}

Flywheel runout limit [A65M-R]
0.05 mm {0.002 in}

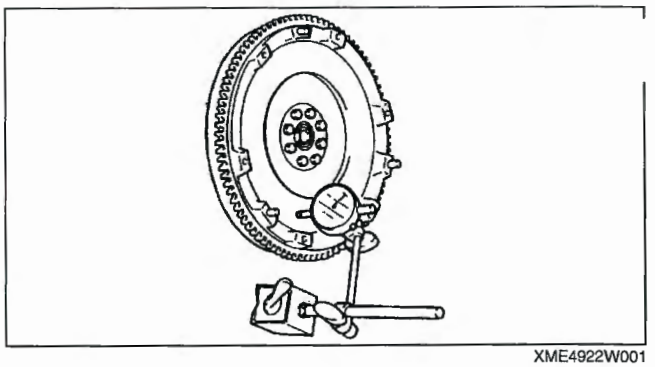

XME4922W001

FLYWHEEL INSPECTION [A26MX-R]

E6U051011500W03

Caution
- **Do not rework the flywheel if it is distorted.**
- **Do not clean the dual mass flywheel with any kind of fluid. Clean the flywheel with a dry cloth only.**
- **Do not clean the gap between the primary and secondary mass. Only clean the bolt connection surface and the clutch surface.**

1. Remove the flywheel.

Note
- Correct slight scratches and discoloration using sandpaper.
- Inspect the runout of the surface that contacts the clutch disc with the flywheel installed to the crankshaft.

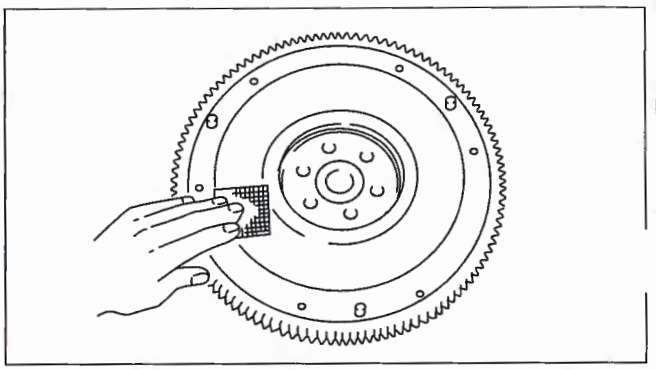

C3U0510W004

2. Inspect the flywheel.
   — Cracks
   — Worn ring gear teeth
   — Chipped or cracked ring gear teeth
   — Surface that contacts the clutch disc for scratches, nicks, and discoloration.
   - If there is any malfunction, replace the flywheel.
3. Inspect the flywheel for lateral movement.
   (1) Rotate the flywheel in either or both directions, or rock slightly on the axis in relation to the primary mass.
      - If there is any lateral movement, replace the flywheel with a new one.

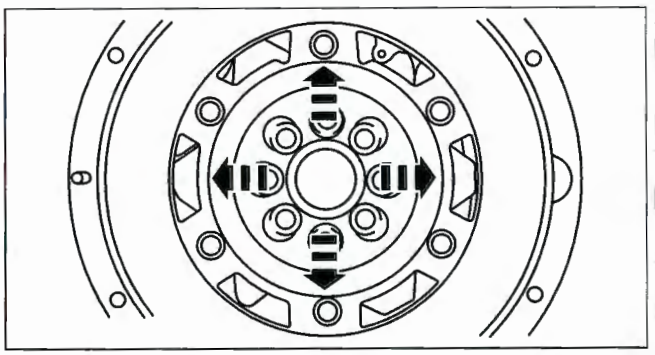

B3E0510W055

4. Verify that the secondary mass does not rotate by 15 teeth or more.
   - If it rotates by 15 teeth or more, replace the dual-mass flywheel.
5. Visually inspect the secondary mass.
   - If there is any damage, replace the dual-mass flywheel.

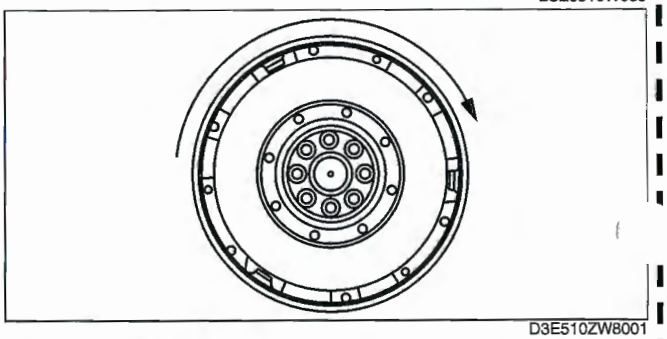

D3E510ZW8001

6. Visually inspect the ring gear on the dual-mass flywheel.
   - If there is any damage, replace the dual-mass flywheel.

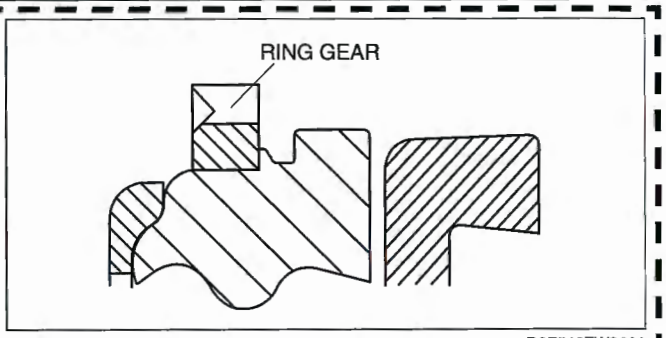

D3E510ZW8002

7. Inspect the welded area of the dual-mass flywheel for grease leakage.
   - If there is grease leakage, replace the dual-mass flywheel.

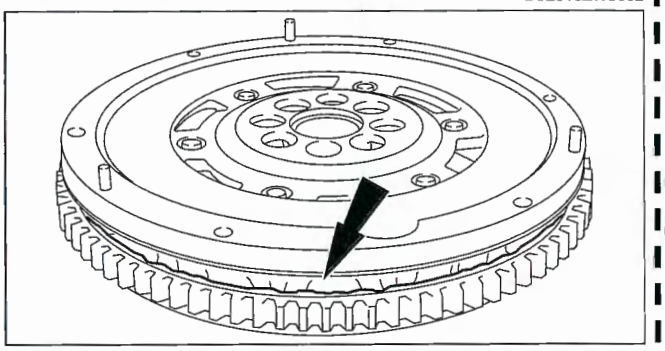
B3E0510W057

8. Inspect the dual-mass flywheel runout.

   Dual-mass flywheel maximum runout
   1.5 mm {0.059 in}

   - If it is more than the maximum specification, replace the dual-mass flywheel.

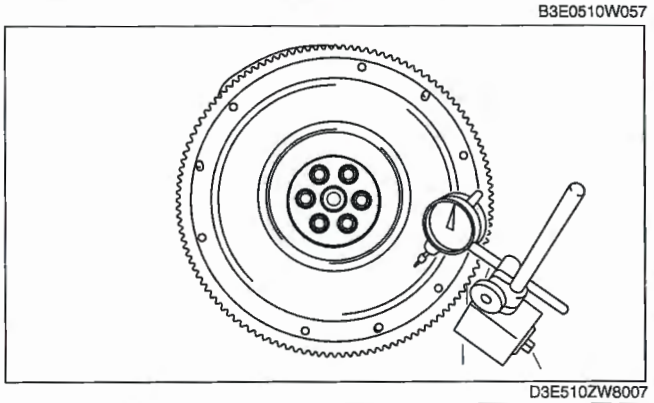
D3E510ZW8007

9. Inspect the dual-mass flywheel for the amount of guide pin projection.
   - If not within the specification, replace the dual-mass flywheel.

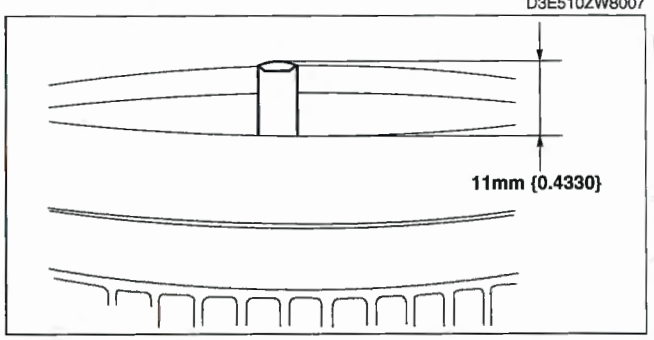

D3E510ZW8005

10. Rotate the secondary mass left and right and verify that it rotates within a range of three teeth without resistance.
    - If there is any resistance, replace the dual-mass flywheel.
11. Inspect the dual-mass flywheel for cracks.
    - If there are cracks, replace the dual-mass flywheel.

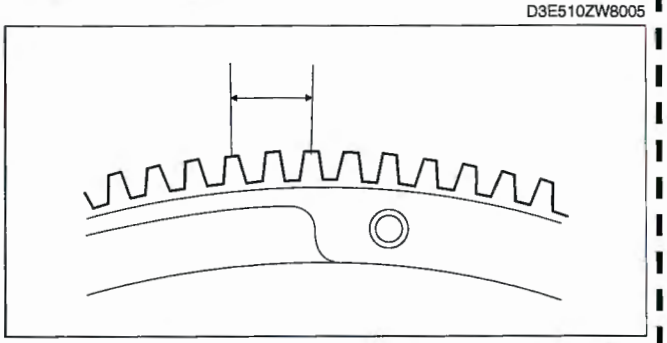
D3E510ZW8120

05–15A MANUAL TRANSAXLE [G35M-R]

MANUAL TRANSAXLE LOCATION INDEX [G35M-R] 05–15A–1
TRANSAXLE OIL INSPECTION [G35M-R] 05–15A–2
TRANSAXLE OIL REPLACEMENT [G35M-R] 05–15A–2
OIL SEAL (DIFFERENTIAL) REPLACEMENT [G35M-R] 05–15A–3
VEHICLE SPEED SENSOR REMOVAL/INSTALLATION (WITHOUT ABS) [G35M-R] 05–15A–3
VEHICLE SPEED SENSOR INSPECTION (WITHOUT ABS) [G35M-R] 05–15A–4
MANUAL TRANSAXLE REMOVAL/INSTALLATION [G35M-R] 05–15A–4
No.4 Engine Mount Bracket Removal Note 05–15A–6
Manual Transaxle Removal Note 05–15A–8
Manual Transaxle Installation Note 05–15A–8
No.1 Engine Mount and No.4 Engine Mount Bracket Installation Note 05–15A–8
INSPECTION AFTER TRANSAXLE INSTALLATION [G35M-R] 05–15A–9

MANUAL TRANSAXLE LOCATION INDEX [G35M-R]

E6U051500000W01

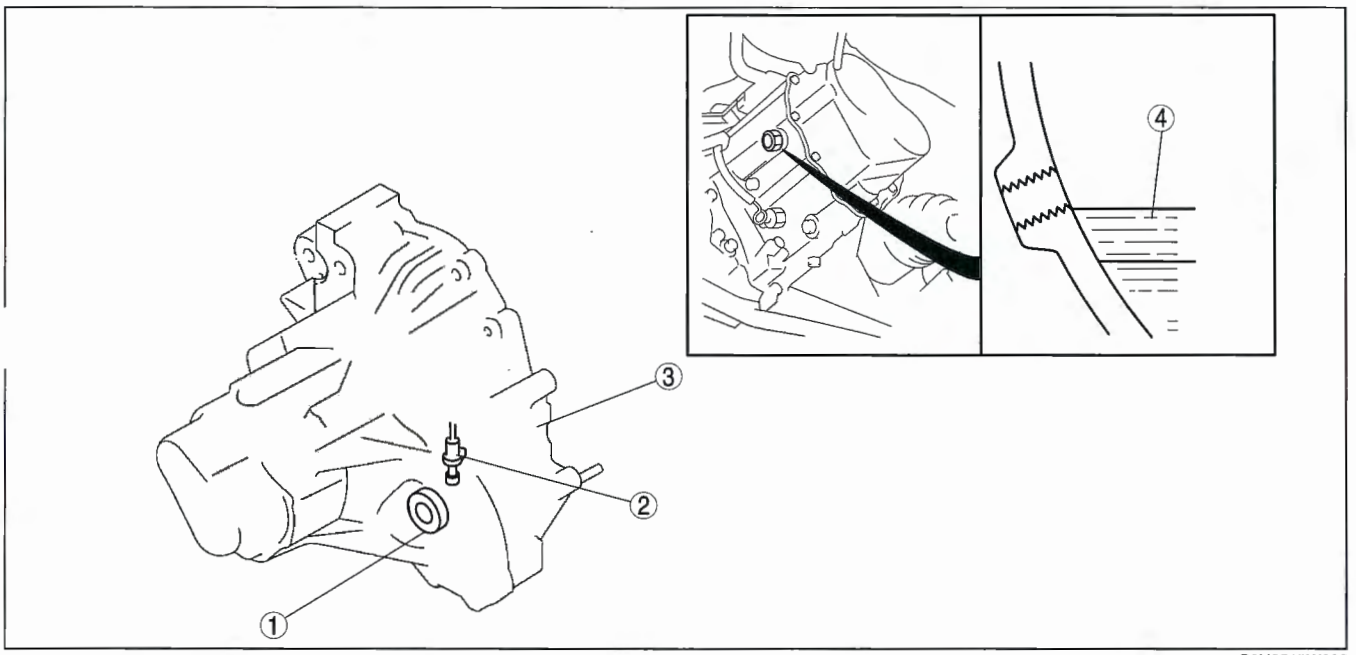

C6U0515W002

1	Oil seal (differential) (See 05–15A–3 OIL SEAL (DIFFERENTIAL) REPLACEMENT [G35M-R].)
2	Vehicle speed sensor (See 05–15A–3 VEHICLE SPEED SENSOR REMOVAL/INSTALLATION (WITHOUT ABS) [G35M-R].) (See 05–15A–4 VEHICLE SPEED SENSOR INSPECTION (WITHOUT ABS) [G35M-R].)

3	Manual transaxle (See 05–15A–4 MANUAL TRANSAXLE REMOVAL/INSTALLATION [G35M-R].)
4	Transaxle oil (See 05–15A–2 TRANSAXLE OIL INSPECTION [G35M-R].) (See 05–15A–2 TRANSAXLE OIL REPLACEMENT [G35M-R].)

TRANSAXLE OIL INSPECTION [G35M-R]

E6U051527001W01

1. Park the vehicle on level ground.
2. Remove the oil level plug and washer.
3. Verify that the oil is near the brim of the plug port.
   - If the oil level is lower than the low level, add the specified amount and type of oil through the oil level plug hole.

   Manual transaxle oil [G35M-R]
   Specified oil grade: API Service GL-4 or GL-5
   Specified oil viscosity (All-season): SAE 75W-90
   Specified oil viscosity (Above 10 °C {50 °F}): SAE 80W-90

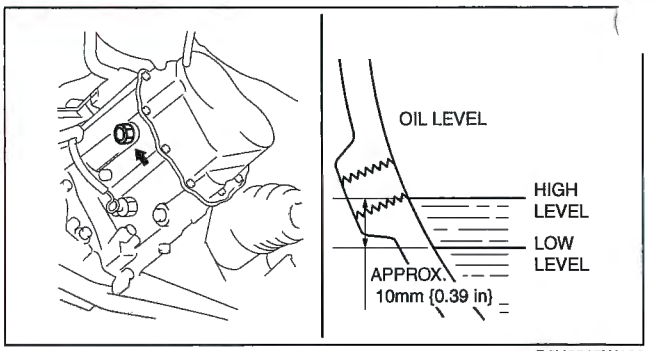

B6U0515W102

4. Install a new washer and the oil level plug.

   Tightening torque
   39—59 N·m {4.0—6.0 kgf·m, 29—43 ft·lbf}

TRANSAXLE OIL REPLACEMENT [G35M-R]

E6U051527001W02

1. Remove the drain plug with the washer.
2. Drain the oil into a suitable container.
3. Install a new washer and the drain plug.

   Tightening torque
   39—59 N·m {4.0—6.0 kgf·m, 29—43 ft·lbf}

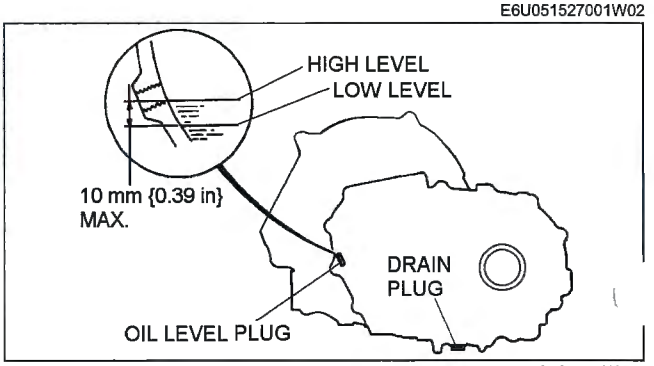

A6A5112W001

4. Remove the oil level plug with washer and add the specified amount and type of oil through the oil level plug hole until the level reaches the bottom of the oil level plug hole.

   Manual transaxle oil [G35M-R]
   Specified oil grade: API Service GL-4 or GL-5
   Specified oil viscosity (All-season): SAE 75W-90
   Specified oil viscosity (Above 10 °C {50 °F}): SAE 80W-90
   Capacity (approximate quantity): 2.87 L {3.03 US qt, 2.53 Imp qt}

5. Install a new washer and the oil level plug.

   Tightening torque
   39—59 N·m {4.0—6.0 kgf·m, 29—43 ft·lbf}

OIL SEAL (DIFFERENTIAL) REPLACEMENT [G35M-R]

E6U051527238W01

1. On level ground, jack up the vehicle and support it evenly on safety stands.
2. Drain the oil from the transaxle.
   Remove the front wheels and splash shields.
3. Separate the drive shaft and joint shaft from the transaxle. (See 03–13–16 FRONT DRIVE SHAFT REMOVAL/INSTALLATION [L3, L3 WITH TC].) (See 03–13–3 JOINT SHAFT REMOVAL/INSTALLATION [L3].)
5. Remove the oil seals using a screwdriver.

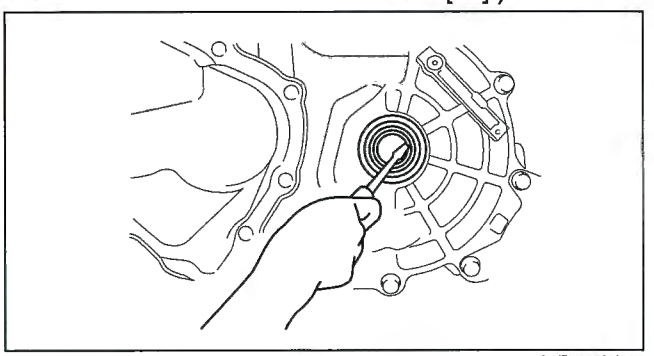

A6E5112W009

6. Using the **SST** and a hammer, tap each new oil seal in evenly until the **SST** contacts the transaxle case.
7. Coat the lip of each oil seal with transaxle oil.
8. Insert the drive shaft and joint shaft to the transaxle. (See 03–13–16 FRONT DRIVE SHAFT REMOVAL/INSTALLATION [L3, L3 WITH TC].) (See 03–13–3 JOINT SHAFT REMOVAL/INSTALLATION [L3].)
9. Install the wheels and splash shields.
10. Add the specified amount and type of oil. (See 05–15A–2 TRANSAXLE OIL REPLACEMENT [G35M-R].)

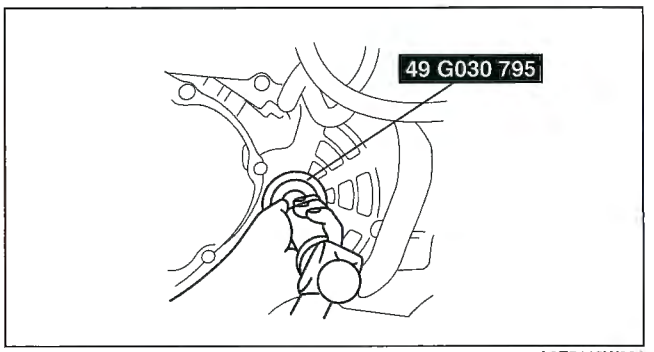

A6E5112W001

VEHICLE SPEED SENSOR REMOVAL/INSTALLATION (WITHOUT ABS) [G35M-R]

E6U051519200W01

1. Disconnect the negative battery cable.
2. Remove the battery and battery tray.
3. Remove the under cover.
4. Disconnect the vehicle speed sensor connector.
5. Remove the vehicle speed sensor.
6. Apply transaxle oil to a new O-ring and install it on a vehicle speed sensor.
7. Install the vehicle speed sensor.

Tightening torque
7.8—11.3 N·m
{80—115 kgf·cm, 69.5—99.8 in·lbf}

8. Connect the vehicle speed sensor connector.
9. Install the under cover.
10. Install the battery and battery tray.
11. Connect the negative battery cable.

VEHICLE SPEED SENSOR INSPECTION (WITHOUT ABS) [G35M-R]

E6U051519200W02

1. Remove the vehicle speed sensor.
2. Measure voltage (AC range) between terminals of the vehicle speed sensor while the gear is turning.

Meter needle	Action
Moves slightly under **5 V** (AC range)	Repair wiring harness between instrument cluster and vehicle speed sensor.
Does not move	Replace vehicle speed sensor.

3. Install the vehicle speed sensor.

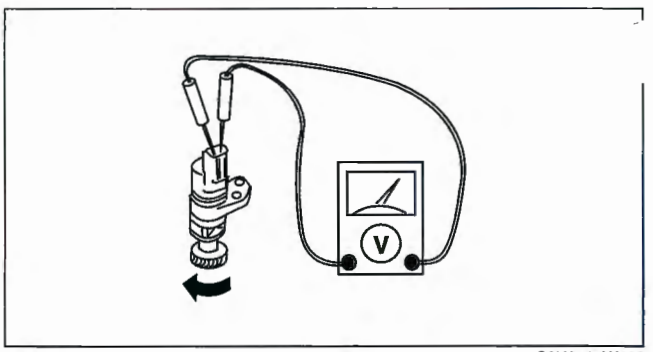

C3U0515W002

MANUAL TRANSAXLE REMOVAL/INSTALLATION [G35M-R]

E6U051500000W02

1. Disconnect the negative battery cable.
2. Remove the battery and battery tray.
3. Remove the air cleaner component. (See 01–13A–4 INTAKE AIR SYSTEM REMOVAL/INSTALLATION [L3].)
4. Remove the wheels, tires and splash shields.
5. Remove the under cover.
6. Remove the steering gear and linkage, and pipe assembly installation bolts from the front crossmember, then suspend the steering gear and linkage with a cable. (See 06–12–11 STEERING GEAR AND LINKAGE REMOVAL/INSTALLATION [L3].)

   Pipe assembly tightening torque
   7.8—10.8 N·m {79.6—110.0 kgf·cm, 69.1—95.5 in·lbf}

7. Drain the transaxle oil into a suitable container.

   Warning
   - **Improperly jacking a transaxle is dangerous. It can slip off the jack and may cause serious injur**

8. Remove in the order indicated in the table.
9. Install in the reverse order of removal.
10. Add the specified amount of specified transaxle oil.
11. Warm up the engine and transaxle, inspect for oil leakage, and inspect the transaxle operation.

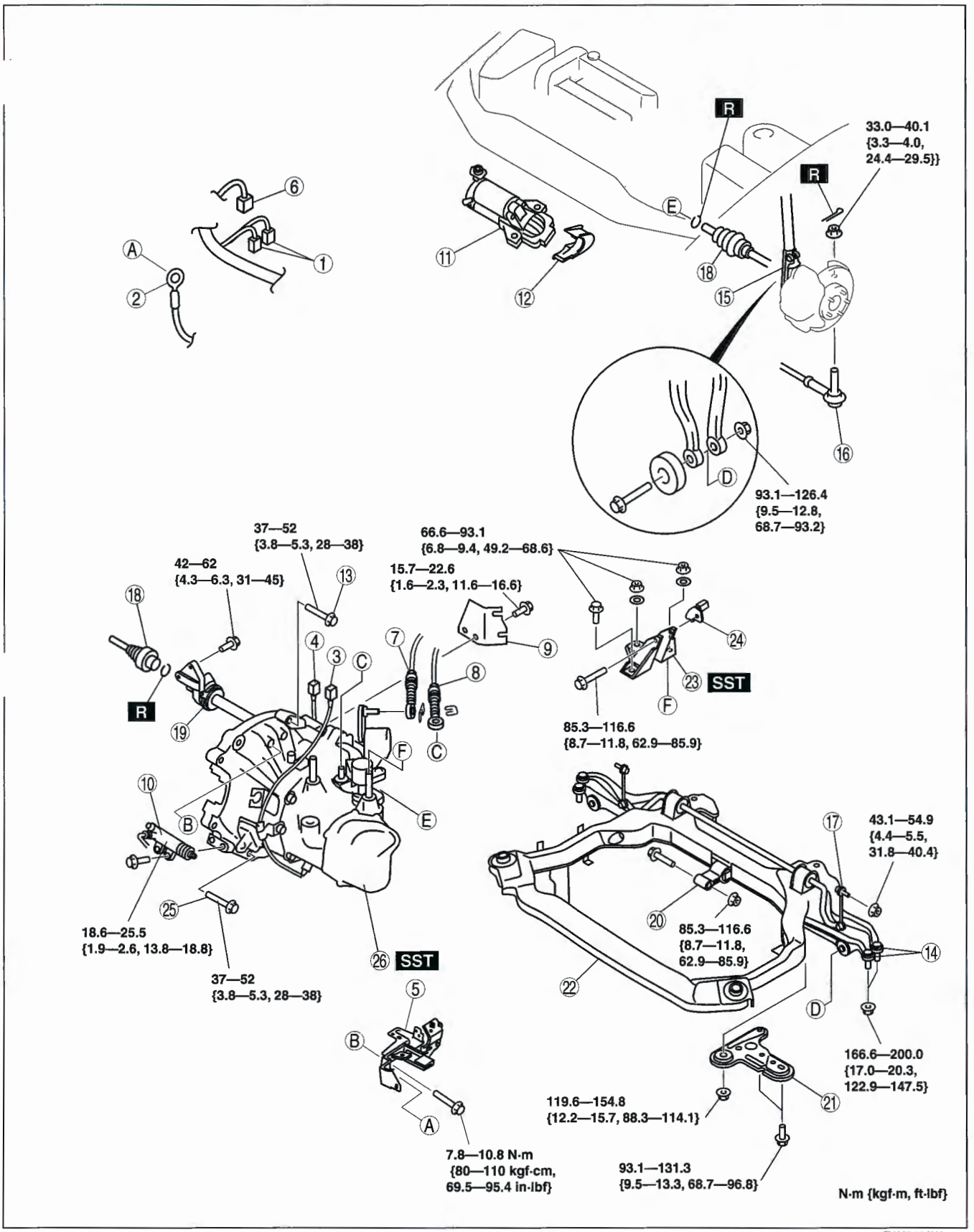

E6U515AW5001

1	HO2S connector
2	GND wiring harness
3	Back-up light switch connector
4	Neutral switch connector

5	Harness bracket
6	Vehicle speed sensor connector (Without ABS)
7	Select cable
8	Shift cable

9	Cable bracket
10	Clutch release cylinder
11	Starter (See 01–19A–2 STARTER REMOVAL/ INSTALLATION [L3, AJ].)
12	Endplate cover
13	Transaxle mounting bolt (upper side)
14	Lower arm (front, rear) ball joint (See 02–13–11 Front Lower Arm (Front) Ball Joint Removal Note.)
15	Damper fork
16	Tie-rod end ball joint (See 06–12–12 Tie-rod End Ball Joint Removal Note.)
17	Stabilizer control link
18	Drive shaft (See 03–13–16 FRONT DRIVE SHAFT REMOVAL/ INSTALLATION [L3, L3 WITH TC].)
19	Joint shaft (See 03–13–3 JOINT SHAFT REMOVAL/ INSTALLATION [L3].)
20	No.1 engine mount (See 05–15A–8 No.1 Engine Mount and No.4 Engine Mount Bracket Installation Note.)
21	Crossmember bracket
22	Crossmember component (See 02–13–20 FRONT CROSSMEMBER REMOVAL/INSTALLATION.)
23	No.4 engine mount (See 05–15A–6 No.4 Engine Mount Bracket Removal Note.) (See 05–15A–8 No.1 Engine Mount and No.4 Engine Mount Bracket Installation Note.)
24	Dynamic damper
25	Transaxle mounting bolt (lower side)
26	Manual transaxle (See 05–15A–8 Manual Transaxle Removal Note.) (See 05–15A–8 Manual Transaxle Installation Note.)

No.4 Engine Mount Bracket Removal Note

1. Install the **SST** using the following procedure.

Caution

- **Refer to the SST instruction manual for the basic handing procedure.**

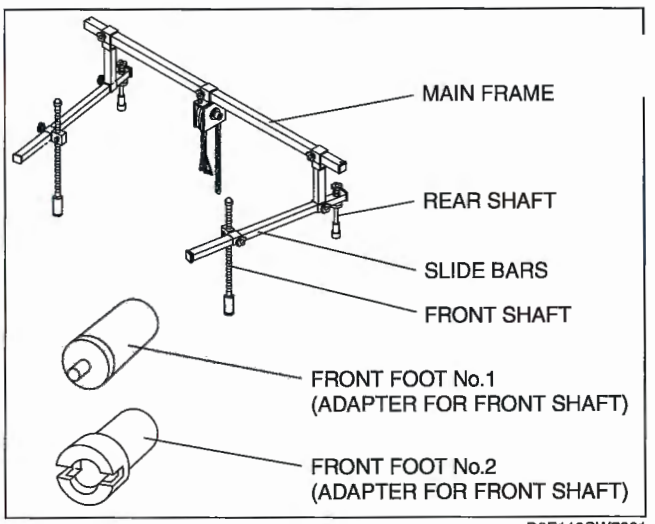

D6E110CW7001

(1) Install the right rear shaft of the **SST** to the bolt of the right shock absorber as shown in the figure.
(2) Install the left rear shaft of the **SST** to the bolt of the left shock absorber. (Identical position to the right side)

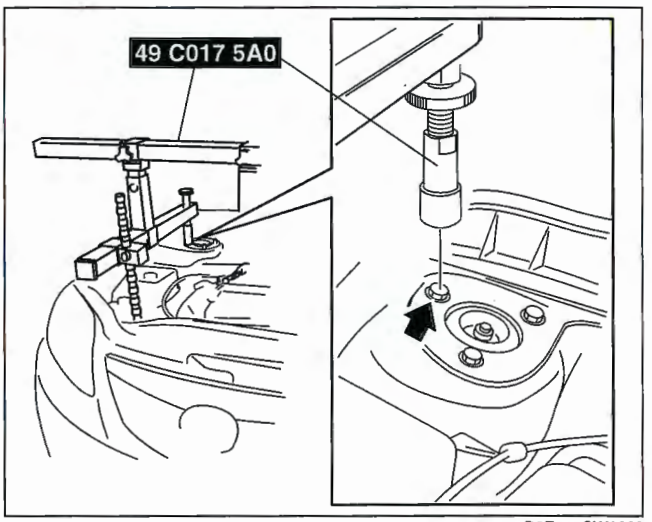

D6E515CW3008

(3) Install the left/right front shaft of the **SST** with front foot No.2 to the bolt as shown in the figure.
(4) Adjust the positions of the **SST** side bars so that they are the same height (left and right) and horizontal.
(5) Make sure each joint is securely tightened.

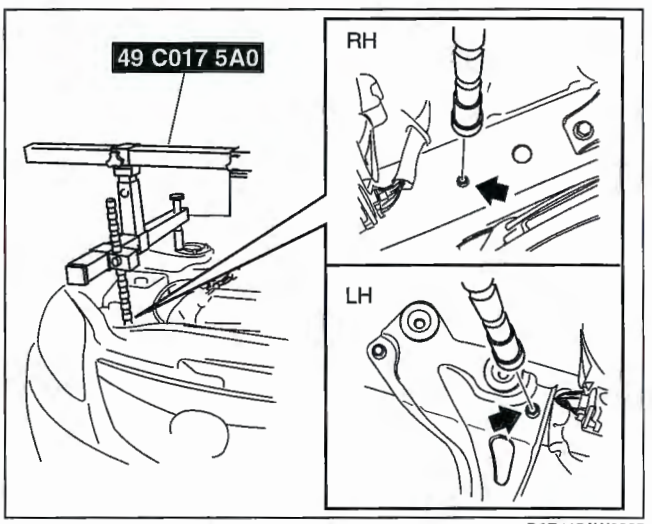

D6E515AW3005

2. Support the engine using the **SST**.

Note
- The **SST** (49 E017 5A0) can be used in place of the **SST** (49 C017 5A0).

3. Remove the No.4 engine mount bracket.

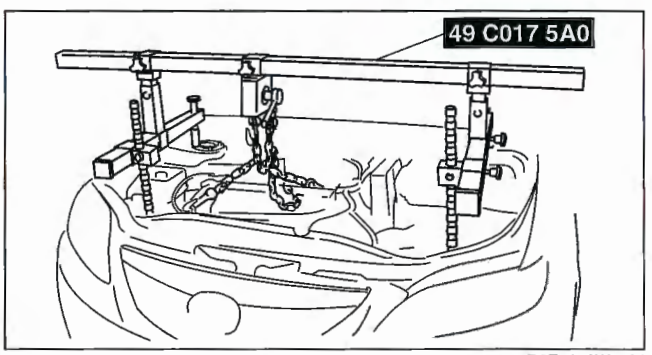

D6E515AW3004

Manual Transaxle Removal Note

1. Lean the engine toward the transaxle.
2. Support the transaxle on a jack.
3. Remove the transaxle mounting bolts.
4. Remove the transaxle.

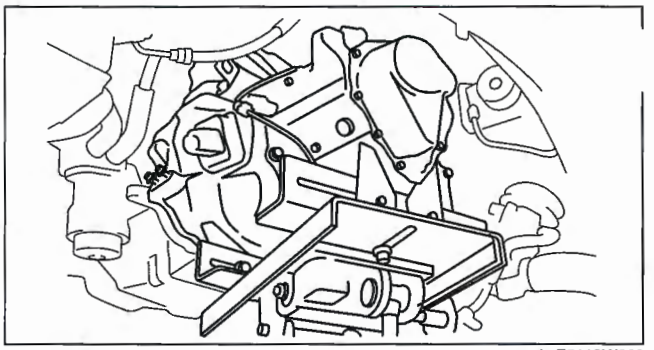

A6E5112W003

Manual Transaxle Installation Note

1. Set the transaxle on a jack and lift into place.
2. Install the transaxle mounting bolts.
3. Adjust the **SST** (49 C017 5A0) so that the engine is located at the specified position.

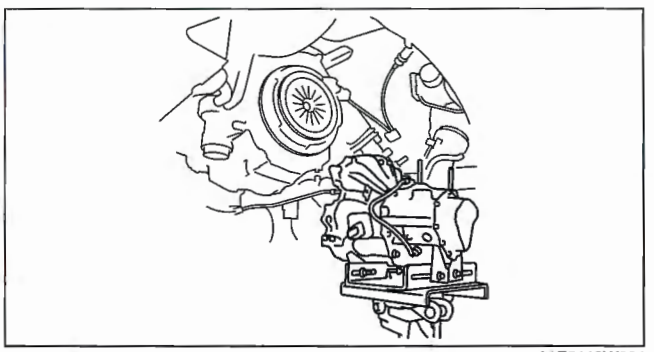

A6E5112W004

No.1 Engine Mount and No.4 Engine Mount Bracket Installation Note

1. Verify that the engine mount rubber is installed as shown.
2. By aligning the holes with the stud bolts, install the No.4 engine mount bracket to the transaxle.
3. By aligning the holes with the stud bolts, install the No.1 engine mount to the transaxle.
4. Align the hole of the No.4 engine mount bracket with the No.4 engine mount rubber on vehicle, and temporarily tighten bolt D.
5. Lightly tighten nuts B, C and bolt A.
6. Tighten nuts B, C in order of B→C, then bolt A.
7. Tighten bolt D.

Tightening torque
A, B, C: 66.6—93.1 N·m
{6.8—9.4 kgf·m, 49.2—68.6 ft·lbf}
D: 85.3—116.6 N·m
{8.7—11.8 kgf·m, 62.9—85.9 ft·lbf}

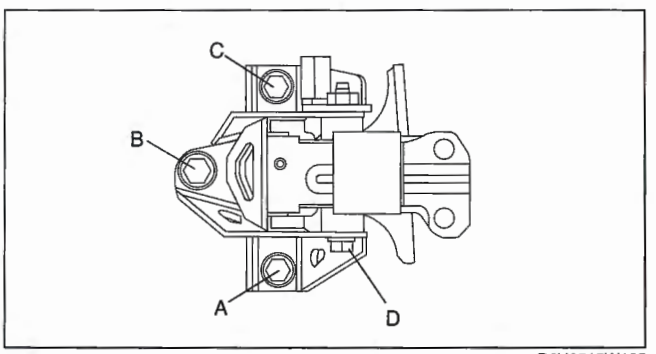

B6U0515W105

8. Tighten bolt E to the No.1 engine mount.

Tightening torque
E: 85.3—116.6 N·m
{8.7—11.8 kgf·m, 62.9—85.9 ft·lbf}

9. Remove the **SST** (49 C017 5A0).

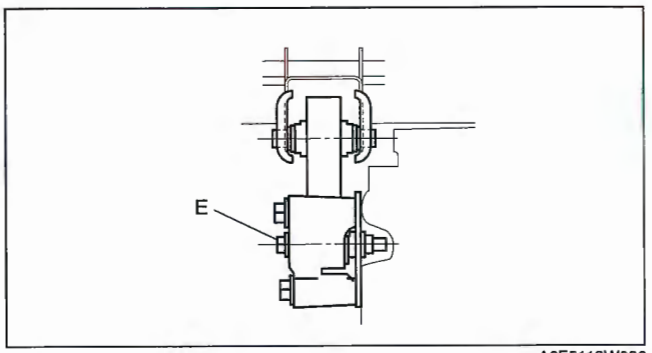

A6E5112W006

INSPECTION AFTER TRANSAXLE INSTALLATION [G35M-R]

E6U051500000W03

Note
- Perform the following inspection only when the transaxle has been overhauled.

1. Perform a road test and inspect the following items:
   (1) No abnormal noise in each shift position.
   (2) Smooth shift operation when shifting gears.
   (3) No gear slipout after shifting gears.
   (4) Back-up light switch operates correctly.

05–15B MANUAL TRANSAXLE [A65M-R]

MANUAL TRANSAXLE LOCATION INDEX [A65M-R] 05–15B–1
TRANSAXLE OIL INSPECTION [A65M-R] 05–15B–2
TRANSAXLE OIL REPLACEMENT [A65M-R] 05–15B–2
OIL SEAL (DIFFERENTIAL) REPLACEMENT [A65M-R] 05–15B–3
REVERSE SWITCH INSPECTION [A65M-R] 05–15B–3
REVERSE SWITCH REMOVAL/INSTALLATION [A65M-R] 05–15B–4
NEUTRAL SWITCH REMOVAL/INSTALLATION [A65M-R] 05–15B–4
VEHICLE SPEED SENSOR REMOVAL/INSTALLATION (WITHOUT ABS) [A65M-R] 05–15B–4
VEHICLE SPEED SENSOR INSPECTION (WITHOUT ABS) [A65M-R] 05–15B–5
MANUAL TRANSAXLE REMOVAL/INSTALLATION [A65M-R] 05–15B–5
No.4 Engine Mount Bracket Removal Note 05–15B–7
Manual Transaxle Removal Note 05–15B–9
Manual Transaxle Installation Note 05–15B–10
No.1 Engine Mount Installation Note 05–15B–10
No.4 Engine Mount Installation Note 05–15B–10
INSPECTION AFTER TRANSAXLE INSTALLATION [A65M-R] 05–15B–11

MANUAL TRANSAXLE LOCATION INDEX [A65M-R]

E6U051500000W04

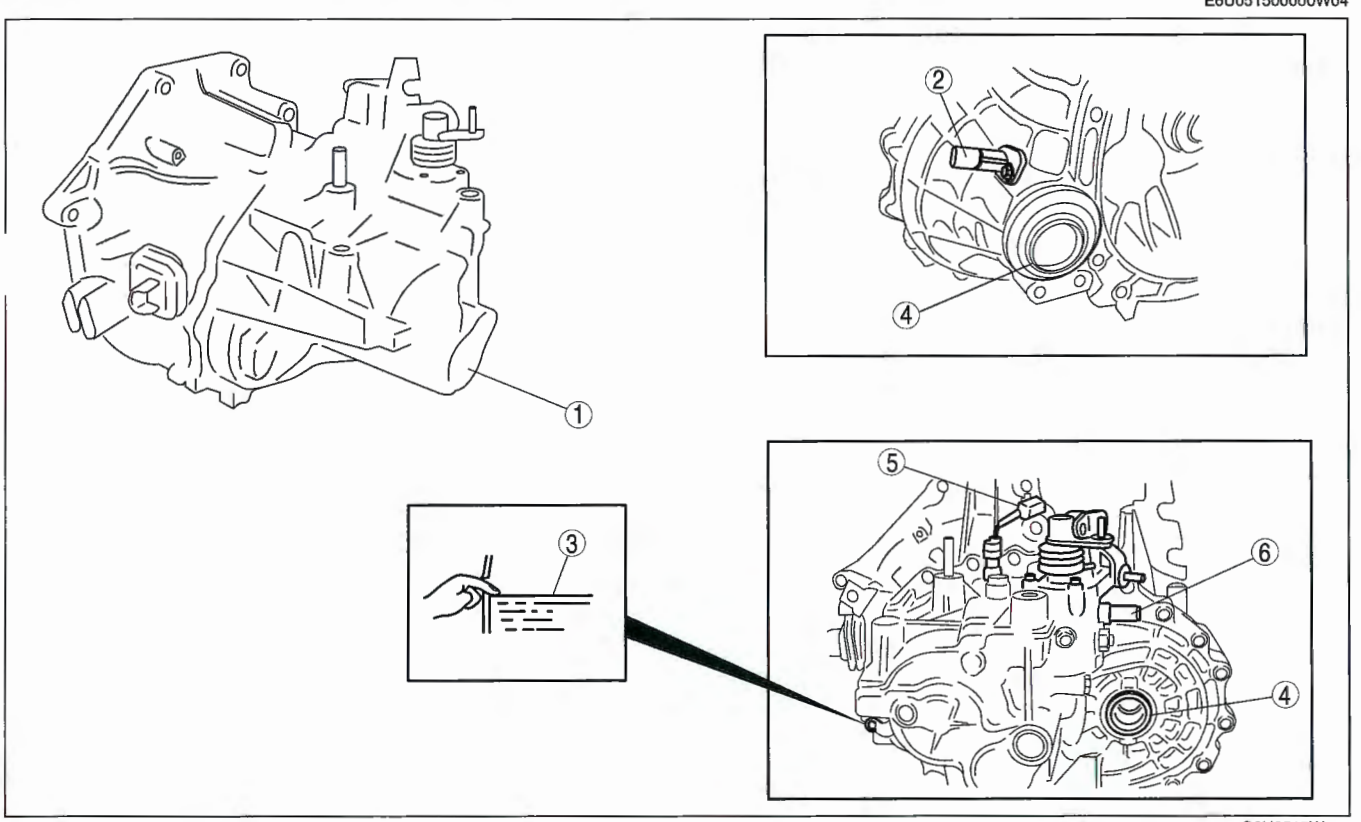

C6U0515W001

1	Manual transaxle (See 05–15B–5 MANUAL TRANSAXLE REMOVAL/INSTALLATION [A65M-R].)
2	Vehicle speed sensor (Without ABS) (See 05–15B–4 VEHICLE SPEED SENSOR REMOVAL/INSTALLATION (WITHOUT ABS) [A65M-R].) (See 05–15B–5 VEHICLE SPEED SENSOR INSPECTION (WITHOUT ABS) [A65M-R].)
3	Transaxle oil (See 05–15B–2 TRANSAXLE OIL INSPECTION [A65M-R].) (See 05–15B–2 TRANSAXLE OIL REPLACEMENT [A65M-R].)
4	Oil seal (differential) (See 05–15B–3 OIL SEAL (DIFFERENTIAL) REPLACEMENT [A65M-R].)
5	Reverse switch (See 05–15B–3 REVERSE SWITCH INSPECTION [A65M-R].) (See 05–15B–4 REVERSE SWITCH REMOVAL/INSTALLATION [A65M-R].)
6	Neutral switch (See 05–15B–4 NEUTRAL SWITCH REMOVAL/INSTALLATION [A65M-R].)

TRANSAXLE OIL INSPECTION [A65M-R]

E6U051527001W03

1. Park the vehicle on level ground.
2. Remove the filler plug and gasket.
3. Verify that the oil is near the brim of the plug port.
   - If the oil level is low, add the specified amount and type of oil through the filler plug hole.

Manual transaxle oil [A65M-R]
Specified oil grade: API Service GL-4 or GL-5
Specified oil viscosity: SAE 75W-90

4. Install a new gasket and the filler plug.

Tightening torque
30.0—39.0 N·m
{3.1—3.9 kgf·m, 22.1—28.8 in·lbf}

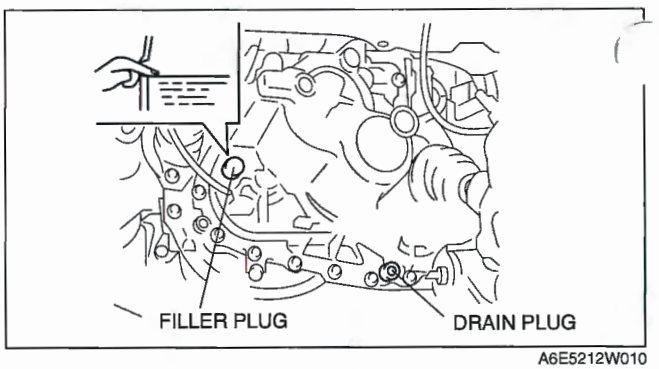

A6E5212W010

TRANSAXLE OIL REPLACEMENT [A65M-R]

E6U051527001W04

1. Remove the drain plug with the gasket.
2. Drain the oil into a suitable container.
3. Install a new gasket and the drain plug.

Tightening torque
30.0—39.0 N·m
{3.1—3.9 kgf·m, 22.1—28.8 in·lbf}

4. Remove the filler plug with gasket and add the specified amount and type of oil through the filler plug hole until the level reaches the bottom of the filler plug hole.

Manual transaxle oil [A65M-R]
Specified oil grade: API Service GL-4 or GL-5
Specified oil viscosity: SAE 75W-90
Capacity (approximate quantity): 2.3 L {2.4 US qt, 2.0 Imp qt}

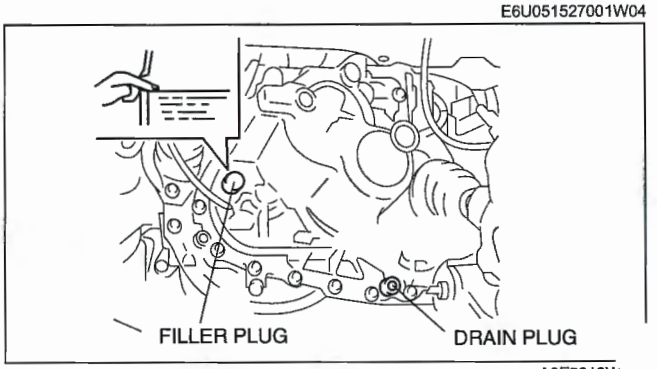

A6E5212W

5. Install a new gasket and the filler plug.

Tightening torque
30.0—39.0 N·m
{3.1—3.9 kgf·m, 22.1—28.8 in·lbf}

OIL SEAL (DIFFERENTIAL) REPLACEMENT [A65M-R]

E6U051527238W02

1. On level ground, jack up the vehicle and support it evenly on safety stands.
2. Drain the oil from the transaxle.
   Remove the front wheels and splash shields.
3. Separate the drive shaft and joint shaft from the transaxle. (See 03–13–19 FRONT DRIVE SHAFT REMOVAL/INSTALLATION [AJ].) (See 03–13–5 JOINT SHAFT REMOVAL/INSTALLATION [AJ].)
5. Remove the oil seals using a screwdriver.

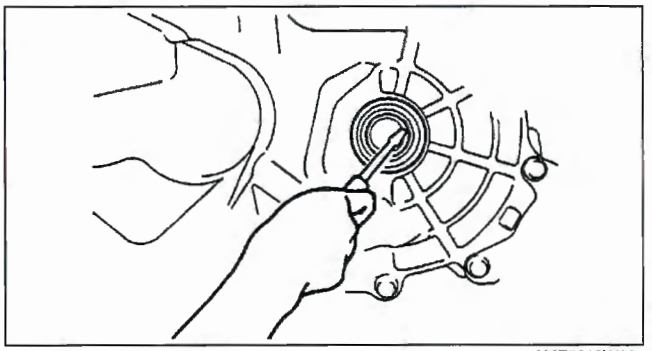

AME5212W005

6. Using the **SSTs** and a hammer, tap each new oil seal in evenly until the **SSTs** contact the transaxle case.
7. Coat the lip of each oil seal with transaxle oil.
8. Insert the drive shaft and joint shaft into the transaxle. (See 03–13–19 FRONT DRIVE SHAFT REMOVAL/INSTALLATION [AJ].) (See 03–13–5 JOINT SHAFT REMOVAL/INSTALLATION [AJ].)
9. Install the wheels and splash shields.
10. Add the specified amount and type of oil. (See 05–15B–2 TRANSAXLE OIL REPLACEMENT [A65M-R].)

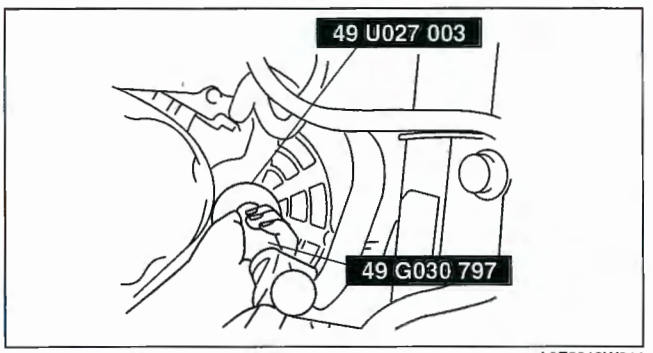

A6E5212W011

REVERSE SWITCH INSPECTION [A65M-R]

E6U051519200W03

1. Disconnect the reverse switch connector.

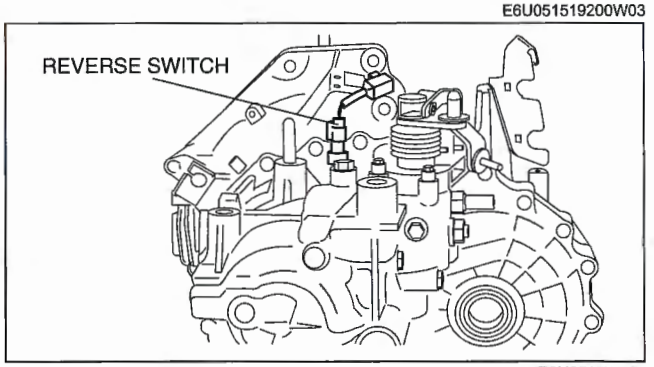

B6U0515W002

2. Shift the shift lever to each position, and inspect for continuity between terminals A and B.
   - If not as specified, replace the reverse switch. (See 05–15B–4 REVERSE SWITCH REMOVAL/INSTALLATION [A65M-R].)

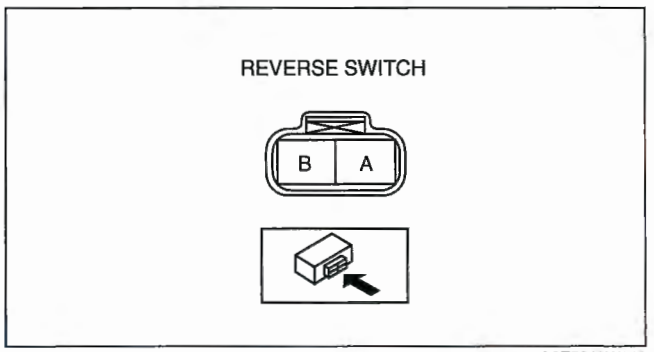

A6E5212W013

Specification

O—O : Continuity

Shift position	Connector terminal	
	A	B
Reverse	O	O
Others		

A6E5212W014

3. Connect the reverse switch connector.

REVERSE SWITCH REMOVAL/INSTALLATION [A65M-R]

E6U051519200W04

1. Remove the reverse switch.
2. Apply a light coat of silicone sealant to the screw of the reverse switch.

Sealant
Three Bond product: TB1215

3. Install the reverse switch to the transaxle case.

Tightening torque
22.5—33.3 N·m
{2.3—3.4 kgf·m, 16.6—24.6 ft·lbf}

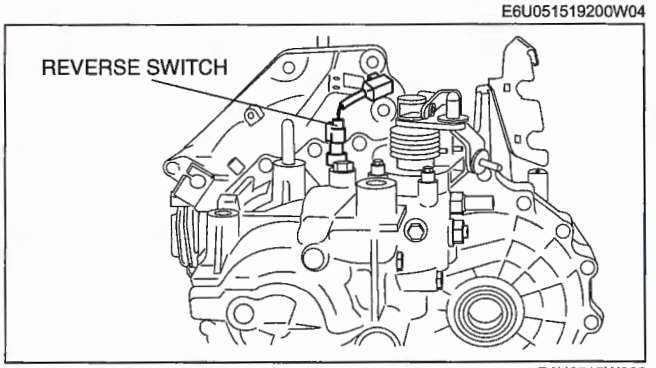

B6U0515W002

NEUTRAL SWITCH REMOVAL/INSTALLATION [A65M-R]

E6U051519200W05

1. Remove the neutral switch.
2. Apply a light coat of silicone sealant to the screw of the neutral switch.

Sealant
Three Bond product: TB1215

3. Install the neutral switch to the transaxle case.

Tightening torque
22.5—33.3 N·m
{2.3—3.4 kgf·m, 16.6—24.6 ft·lbf}

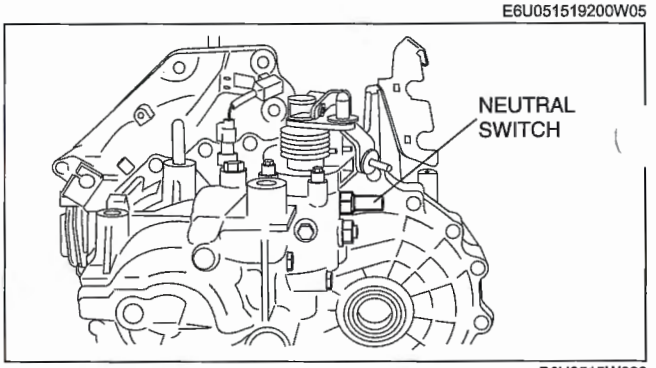

B6U0515W003

VEHICLE SPEED SENSOR REMOVAL/INSTALLATION (WITHOUT ABS) [A65M-R]

E6U051519200W06

1. Disconnect the negative battery cable.
2. Remove the battery and battery tray.
3. Remove the under cover.
4. Disconnect the vehicle speed sensor connector.
5. Remove the vehicle speed sensor.
6. Apply transaxle oil to a new O-ring and install it on a vehicle speed sensor.
7. Install the vehicle speed sensor.

Tightening torque
7.8—11.0 N·m
{80—112 kgf·cm, 57.6—81.1 in·lbf}

8. Connect the vehicle speed sensor connector.
9. Install the under cover.
10. Install the battery and battery tray.
11. Connect the negative battery cable.

VEHICLE SPEED SENSOR INSPECTION (WITHOUT ABS) [A65M-R]

E6U051519200W07

1. Remove the vehicle speed sensor.
2. Measure voltage (AC range) between terminals of the vehicle speed sensor while the gear is turning.

Meter needle	Action
Moves slightly under **5 V** (AC range)	Repair wiring harness between instrument cluster and vehicle speed sensor.
Does not move	Replace vehicle speed sensor.

3. Install the vehicle speed sensor.

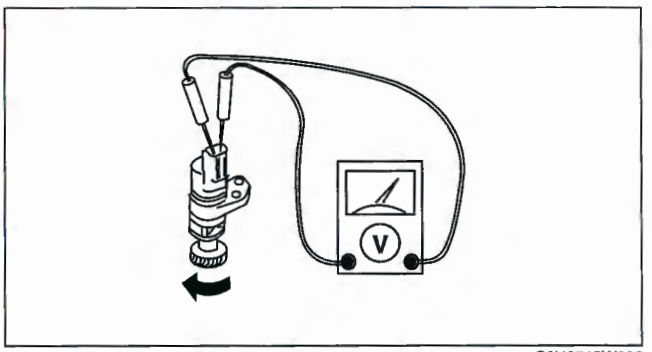

C3U0515W002

MANUAL TRANSAXLE REMOVAL/INSTALLATION [A65M-R]

E6U051500000W05

1. Disconnect the negative battery cable.
2. Remove the battery and battery tray.
3. Remove the air cleaner component and air cleaner bracket. (See 01–13C–2 INTAKE AIR SYSTEM REMOVAL/INSTALLATION [AJ].)
4. Remove the starter. (See 01–19A–2 STARTER REMOVAL/INSTALLATION [L3, AJ].)
5. Remove the front tires and splash shields.
6. Remove the under cover.
7. Remove the steering gear and linkage, and pipe assembly installation bolts from the front crossmember, then suspend the steering gear and linkage with a cable. (See 06–12–13 STEERING GEAR AND LINKAGE REMOVAL/INSTALLATION [AJ].)

Tightening torque

- **Pipe assembly: 7.8—10.8 N·m {79.6—110.0 kgf·cm, 69.1—95.5 in·lbf}**

8. Drain the transaxle oil into a suitable container.

Warning

- **Improperly jacking a transaxle is dangerous. It can slip off the jack and may cause serious injury.**

9. Remove in the order indicated in the figure.
10. Install in the reverse order of removal.
11. Add the specified amount of specified transaxle oil. (See 05–15B–2 TRANSAXLE OIL REPLACEMENT [A65M-R].)
12. Warm up the engine and transaxle, inspect for oil leakage, and inspect the transaxle operation.

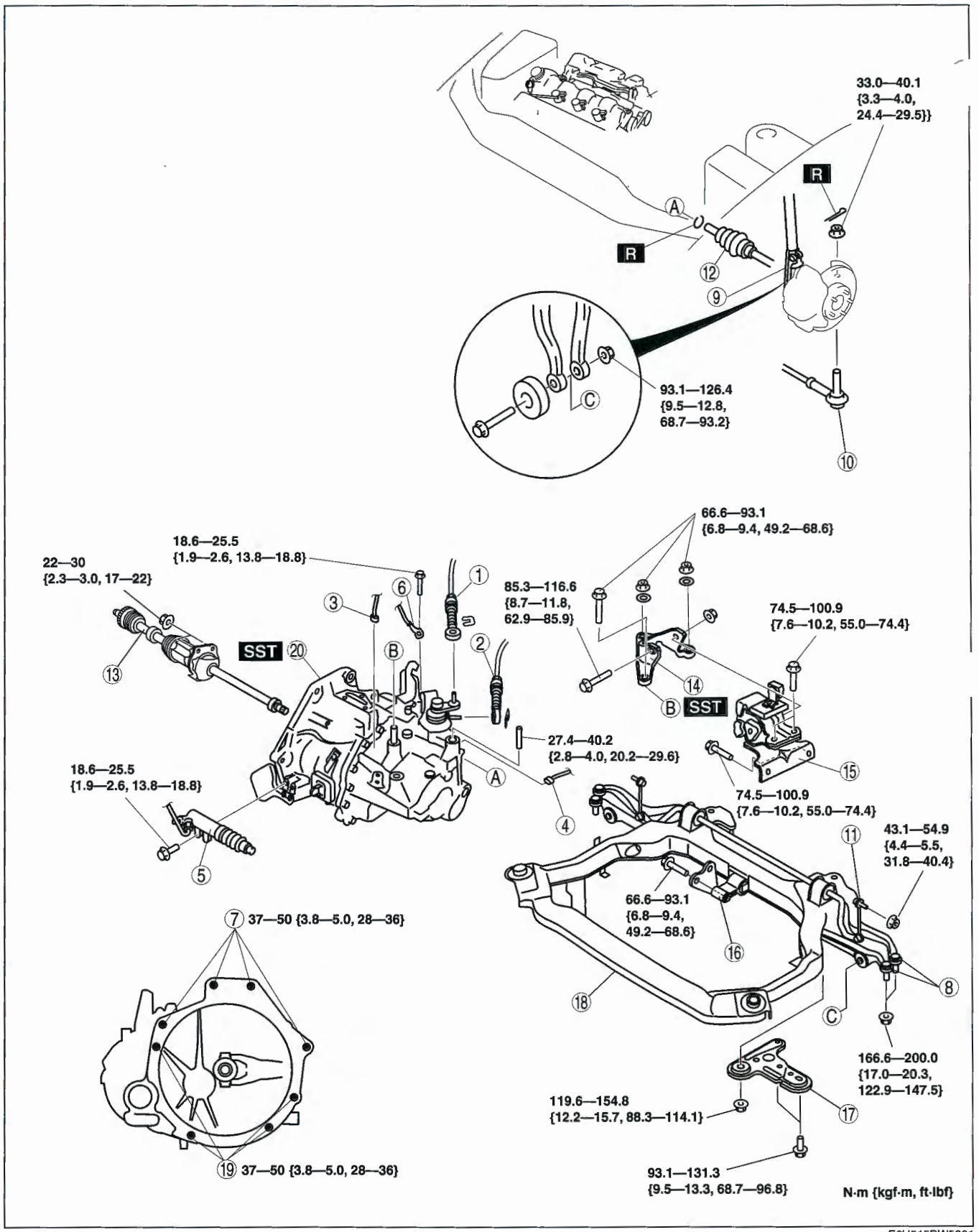

E6U515BW50

1	Shift cable
2	Select cable
3	Reverse switch connector
4	Neutral switch connector

5	Clutch release cylinder
6	GND harness
7	Transaxle mounting bolt (upper side)

8	Lower arm (front, rear) ball joint (See 02–13–11 Front Lower Arm (Front) Ball Joint Removal Note.)
9	Damper fork
10	Tie-rod end ball joint (See 06–12–13 STEERING GEAR AND LINKAGE REMOVAL/INSTALLATION [AJ].)
11	Stabilizer control link
12	Drive shaft (See 03–13–19 FRONT DRIVE SHAFT REMOVAL/INSTALLATION [AJ].)
13	Drive shaft, joint shaft (See 03–13–19 FRONT DRIVE SHAFT REMOVAL/INSTALLATION [AJ].) (See 03–13–5 JOINT SHAFT REMOVAL/INSTALLATION [AJ].)
14	No.4 engine mount bracket (See 05–15B–7 No.4 Engine Mount Bracket Removal Note.) (See 05–15B–10 No.4 Engine Mount Installation Note.)
15	No.4 engine mount rubber (See 05–15B–10 No.4 Engine Mount Installation Note.)
16	No.1 engine mount (See 05–15B–10 No.1 Engine Mount Installation Note.)
17	Crossmember bracket
18	Crossmember (See 02–13–20 FRONT CROSSMEMBER REMOVAL/INSTALLATION.)
19	Transaxle mounting bolt (lower side)
20	Manual transaxle (See 05–15B–9 Manual Transaxle Removal Note.) (See 05–15B–10 Manual Transaxle Installation Note.)

No.4 Engine Mount Bracket Removal Note

1. Remove the ABS/TCS HU/CM connector. (See 04–13–4 ABS/TCS HU/CM REMOVAL/INSTALLATION.)
2. Remove the dynamic chamber. (See 01–13C–2 INTAKE AIR SYSTEM REMOVAL/INSTALLATION [AJ].)
3. Using the bolts **M12×1.25, length 25 mm {0.984 in}** to Install the **SST** as shown (LH bank and RH bank).

   Tightening torque
   100—125 N·m {10.2—12.7 kgf·m, 73.8—92.1 ft·lbf}

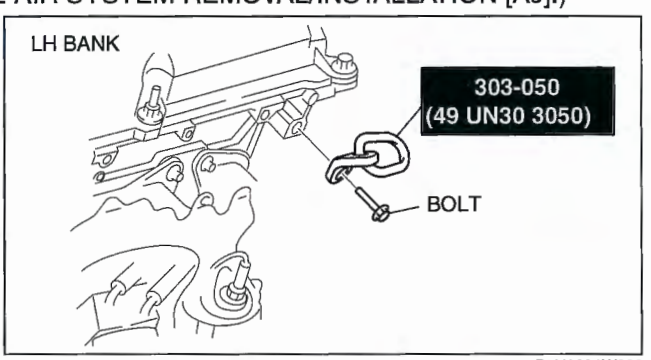

B6U2324W002

4. Install the **SST** using the following procedure.

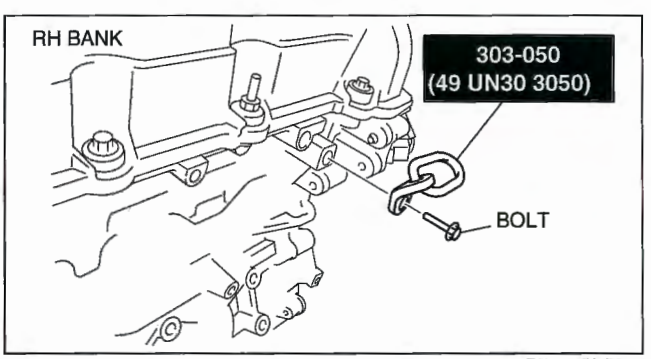

E6U515BW5502

Caution
- **Refer to the SST instruction manual for the basic handing procedure.**

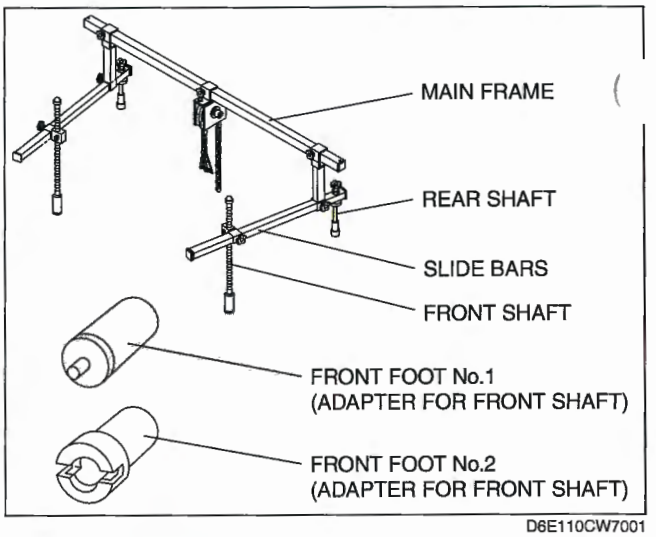

D6E110CW7001

(1) Install the right rear shaft of the **SST** to the bolt of the right shock absorber as shown in the figure.
(2) Install the left rear shaft of the **SST** to the bolt of the left shock absorber. (Identical position to the right side)

Caution
- **When setting the SST on the right side, make sure it doesn't interfere with the ABS/TCS HU/CM.**

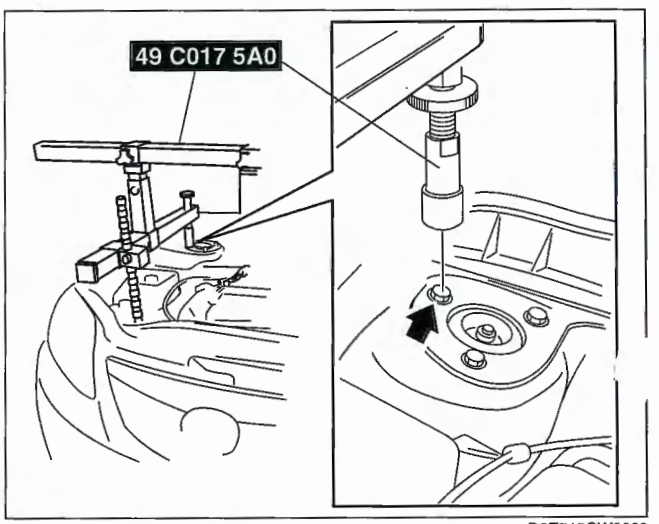

D6E515CW3008

(3) Install the left/right front shaft of the **SST** with front foot No.2 to the bolt as shown in the figure.

* : If equipped

(4) Adjust the positions of the **SST** side bars so that they are the same height (left and right) and horizontal.
(5) Make sure each joint is securely tightened.

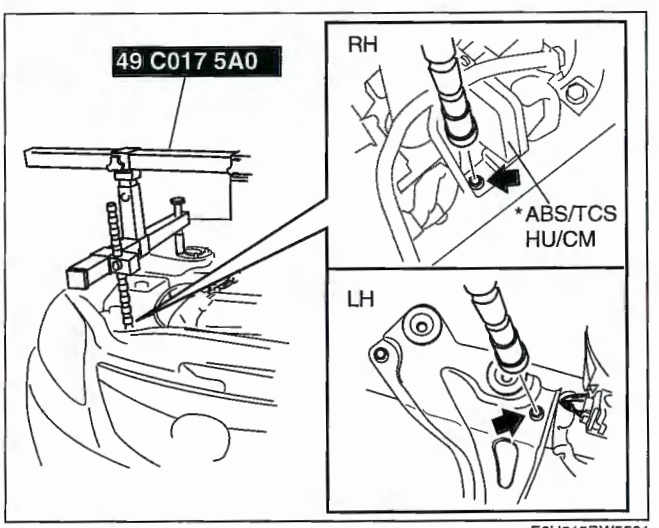

E6U515BW5501

5. Support the engine using the **SST**.

Note
- The **SST** (49 E017 5A0) can be used in place of the **SST** (49 C017 5A0).

6. Remove the No.4 engine mount bracket.

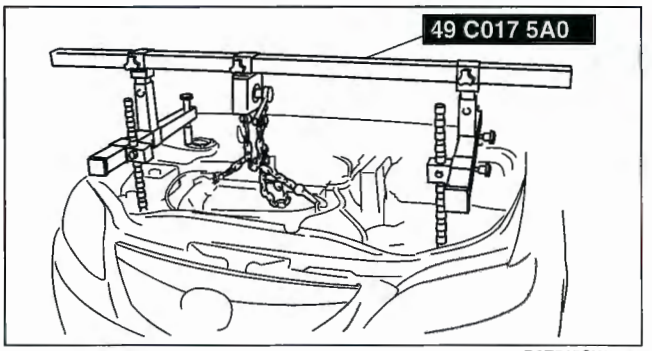

D6E515CW3010

Manual Transaxle Removal Note
1. Remove the stud of the No.4 engine mount.
2. Lean the engine toward the transaxle.

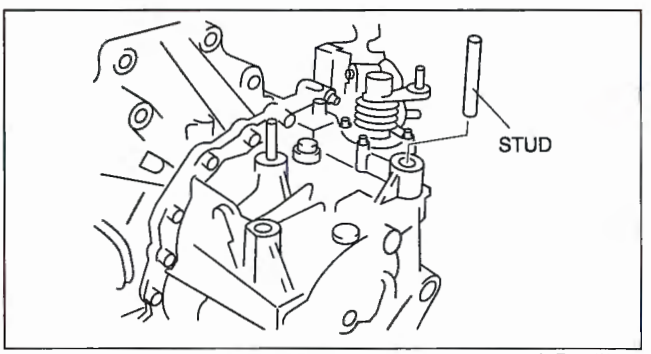

A6E5212W020

3. Support the transaxle on a jack.
4. Remove the transaxle mounting bolts.
5. Remove the transaxle.

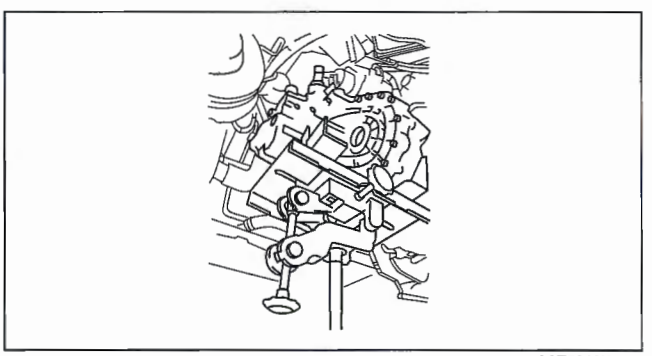
A6E5212W021

Manual Transaxle Installation Note

1. Set the transaxle on a jack and lift into place.
2. Install the transaxle mounting bolts.

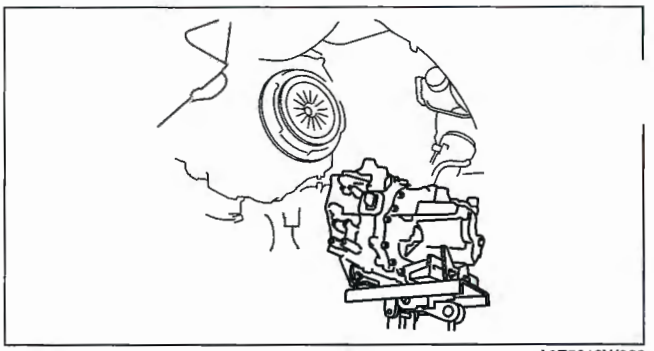

A6E5212W022

3. Install the stud of the No.4 engine mount.

   Tightening torque
   27.4—40.2 N·m
   {2.8—4.0 kgf·m, 20.2—29.6 ft·lbf}

4. Adjust the **SST** (49 C017 5A0) so that the engine is located at the specified position.

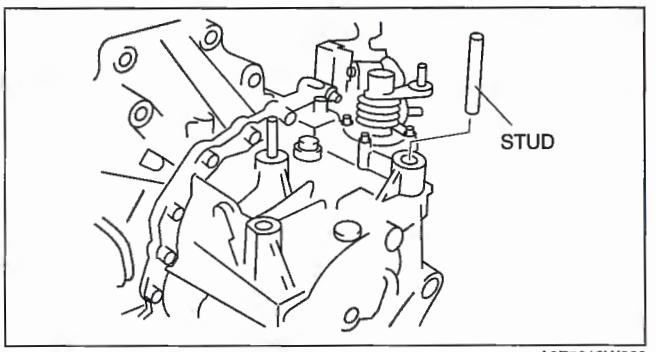

A6E5212W020

No.1 Engine Mount Installation Note

1. Align the hole of the No.1 engine mount rubber with the bolt hole of transaxle.
2. Lightly tighten bolt A, then tighten bolts B and C.
3. Tighten bolt A.

   Tightening torque
   66.6—93.1 N·m
   {6.8—9.4 kgf·m, 49.2—68.6 ft·lbf}

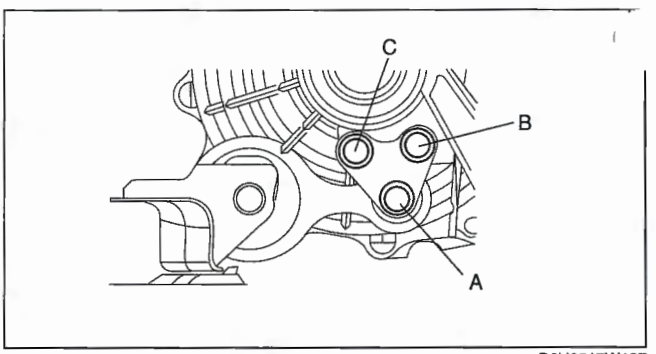

B6U0517W127

No.4 Engine Mount Installation Note

1. Verify that the No.4 engine mount rubber is installed as shown.
2. Lightly tighten bolts A and B.
3. Align the installation hole on the contacted area of the front frame with the bolt C installation hole.
4. Tighten bolt A, then bolt B.
5. Tighten bolt C, then bolt D.

   Tightening torque
   A, B, C, D: 74.5—100.9 N·m
   {7.6—10.2 kgf·m, 55.0—74.4 ft·lbf}

6. Verify that the No.4 engine mount bracket is installed as shown.
7. Lightly tighten bolt E.

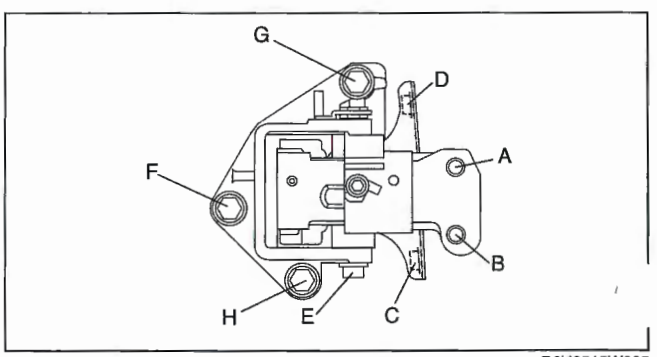

B6U0515W005

8. Set the transaxle on a garage jack and lift it.
9. Align the hole of the No.4 engine mount bracket with the stud bolts of transaxle.
   Lightly tighten nut F, G and bolt H.
   . Tighten nuts F, G in order of F→G, then bolt H.

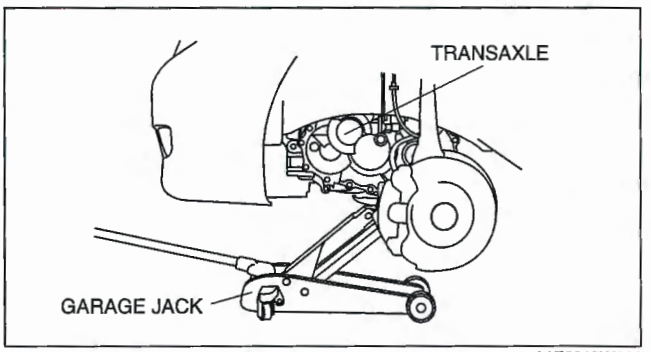

A6E5212W023

12. Tighten bolt E.

Tightening torque
E: 85.3—116.6 N·m
{8.7—11.8 kgf·m, 63.0—85.9 ft·lbf}
F, G, H: 66.6—93.1 N·m
{6.8—9.4 kgf·m, 49.2—68.6 ft·lbf}

13. Remove the **SST** (49 C017 5A0).

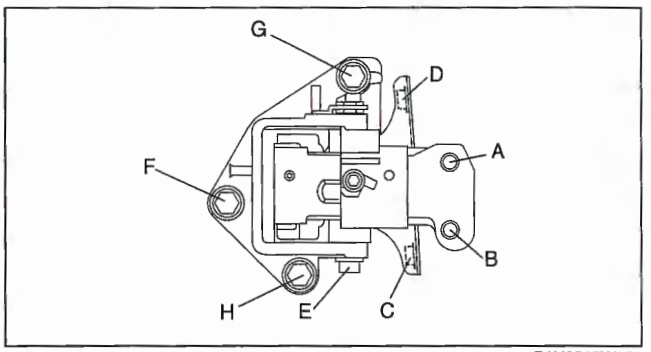

B6U0515W005

INSPECTION AFTER TRANSAXLE INSTALLATION [A65M-R]

E6U051500000W06

Note
- Perform the following inspection only when the transaxle has been overhauled.

Perform a road test and inspect the following items:
(1) No abnormal noise in each shift position.
(2) Smooth shift operation when shifting gears.
(3) No gear slipout after shifting gears.
(4) Back-up light switch operates correctly.

05–15C MANUAL TRANSAXLE [A26MX-R]

MANUAL TRANSAXLE LOCATION
INDEX [A26MX-R] 05–15C–1
TRANSAXLE OIL INSPECTION
[A26MX-R] 05–15C–2
TRANSAXLE OIL REPLACEMENT
[A26MX-R] 05–15C–2
OIL SEAL (DIFFERENTIAL)
REPLACEMENT [A26MX-R] 05–15C–2
NEUTRAL SWITCH
REMOVAL/INSTALLATION
[A26MX-R] 05–15C–3
MANUAL TRANSAXLE
REMOVAL/INSTALLATION
[A26MX-R] 05–15C–4
No.4 Engine Mount Bracket
Removal Note 05–15C–6
Manual Transaxle
Removal Note 05–15C–7
Manual Transaxle
Installation Note 05–15C–8
No.4 Engine Mount Bracket
Installation Note 05–15C–8
INSPECTION AFTER TRANSAXLE
INSTALLATION [A26MX-R] 05–15C–8

MANUAL TRANSAXLE LOCATION INDEX [A26MX-R]

E6U051500000W07

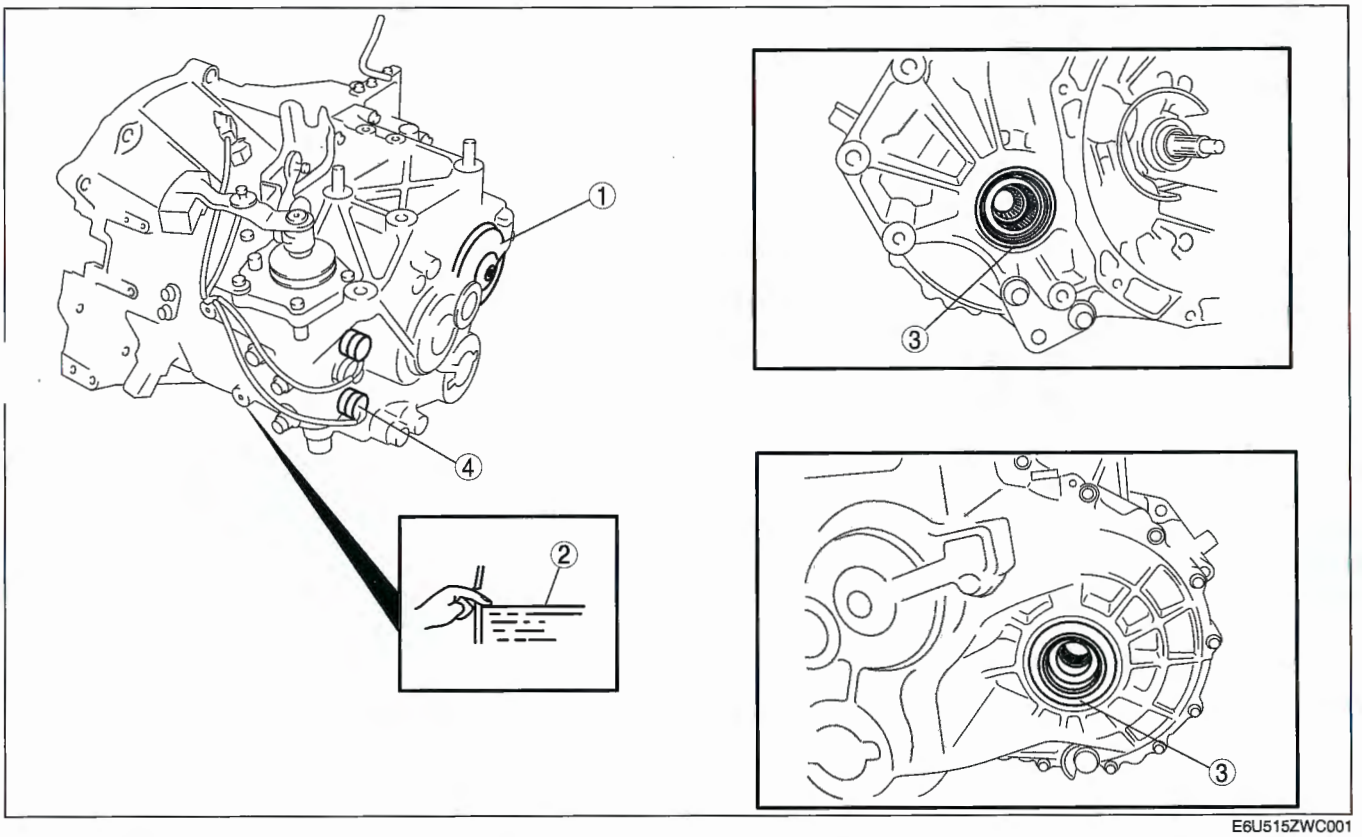

E6U515ZWC001

1	Manual transaxle (See 05–15C–4 MANUAL TRANSAXLE REMOVAL/INSTALLATION [A26MX-R])
2	Transaxle oil (See 05–15C–2 TRANSAXLE OIL INSPECTION [A26MX-R]) (See 05–15C–2 TRANSAXLE OIL REPLACEMENT [A26MX-R])

3	Oil seal (differential) (See 05–15C–2 OIL SEAL (DIFFERENTIAL) REPLACEMENT [A26MX-R])
4	Neutral switch (See 05–15C–3 NEUTRAL SWITCH REMOVAL/INSTALLATION [A26MX-R])

TRANSAXLE OIL INSPECTION [A26MX-R]

E6U051527001W05

1. Park the vehicle on level ground.
2. Remove the oil level plug and washer.
3. Verify that the oil is near the brim of the plug port.
   - If the oil level is low, add the specified amount and type of oil through the filler plug hole.

   Manual transaxle oil [A26MX-R]
   Specified oil grade: API Service GL-4 or GL-5
   Specified oil viscosity: SAE 75W-90

4. Tighten the oil level plug with a new washer.

   Tightening torque
   27.5—50.9 N·m {2.8—5.1 kgf·m, 37.5—20.2 ft·lbf}

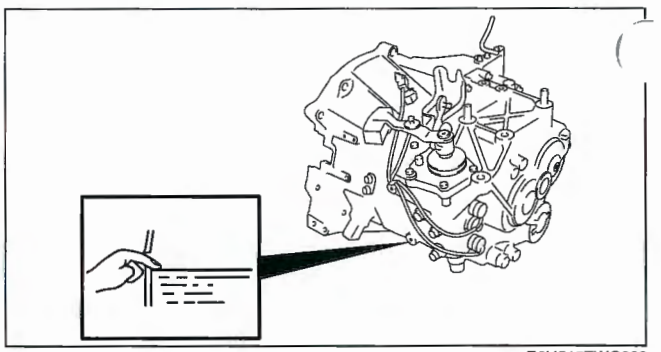

E6U515ZWC003

TRANSAXLE OIL REPLACEMENT [A26MX-R]

E6U051527001W06

1. Remove the drain plug with the washer.
2. Drain the oil into a suitable container.
3. Install a new washer and the drain plug.

   Tightening torque
   27.5—50.9 N·m {2.8—5.1 kgf·m, 37.5—20.2 ft·lbf}

4. Remove the oil level plug with washer and add the specified amount and type of oil through the oil level plug hole until the level reaches the bottom of the oil level plug hole.

   Manual transaxle oil [A26MX-R]
   Specified oil grade: API Service GL-4 or GL-5
   Specified oil viscosity: SAE 75W-90
   Capacity (approximate quantity): 2.55 L {2.69 US qt, 2.24 Imp qt}

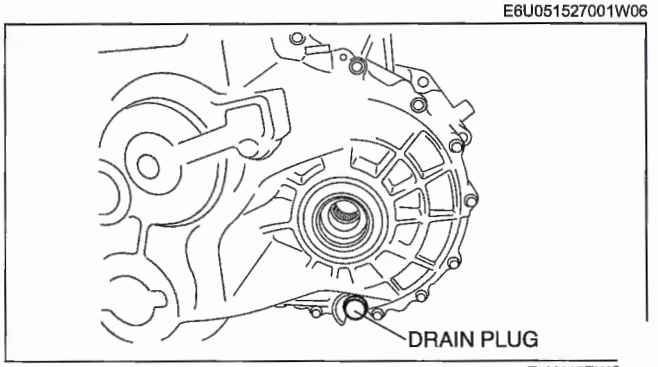

E6U515ZWC

5. Install a new washer and the oil level plug.

   Tightening torque
   27.5—50.9 N·m {2.8—5.1 kgf·m, 37.5—20.2 ft·lbf}

OIL SEAL (DIFFERENTIAL) REPLACEMENT [A26MX-R]

E6U051527238W03

1. On level ground, jack up the vehicle and support it evenly on safety stands.
2. Drain the oil from the transaxle.
3. Remove the transfer. (See 03–16–3 TRANSFER REMOVAL/INSTALLATION)
4. Separate the drive shaft from the transaxle. (See 03–13–16 FRONT DRIVE SHAFT REMOVAL/INSTALLATION [L3, L3 WITH TC])
5. Remove the oil seals using a screwdriver.

6. Using the **SSTs** and a hammer, tap each new oil seal in evenly until the **SSTs** contact the transaxle case.
   Coat the lip of each oil seal with transaxle oil.
   Insert the drive shaft into the transaxle. (See 03–13–16 FRONT DRIVE SHAFT REMOVAL/INSTALLATION [L3, L3 WITH TC])
9. Install the transfer. (See 03–16–3 TRANSFER REMOVAL/INSTALLATION)
10. Add the specified amount and type of oil. (See 05–15C–2 TRANSAXLE OIL REPLACEMENT [A26MX-R].)

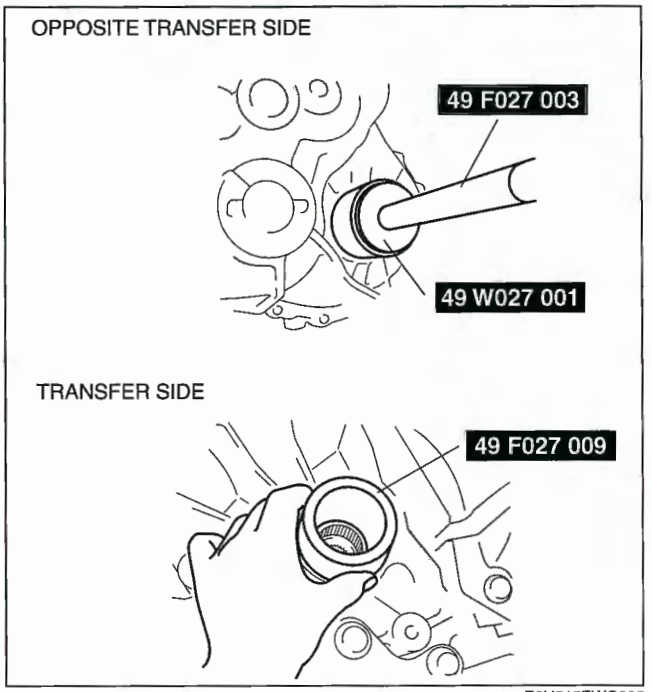

E6U515ZWC005

NEUTRAL SWITCH REMOVAL/INSTALLATION [A26MX-R]

E6U051519200W08

1. Disconnect the negative battery cable.
2. Disconnect the neutral switch connector.
3. Remove the under cover.
4. Remove the neutral switch.
5. Install the neutral switch to the transaxle case.

Tightening torque
28.1—52.3 N·m {2.9—5.3 kgf·m, 20.8—38.5 ft·lbf}

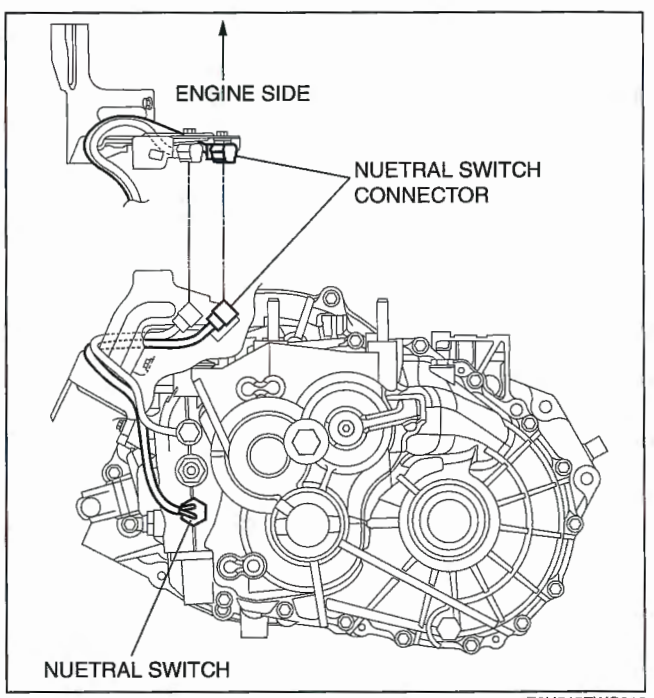

E6U515ZWC016

6. Clamp both the neutral switch and back-up light switch wiring harnesses as shown in the figure.
7. Route the switch wiring harness through the bracket (engine side) as shown in the figure A area.

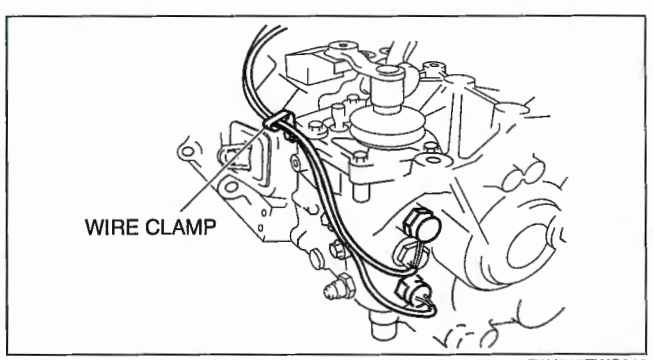

E6U515ZWC018

Caution

- **If the wiring harness is incorrectly routed, the wiring harness and shift lever weight may contact each other causing the wiring harness to be caught while shifting or damaged.**

8. Install the under cover.

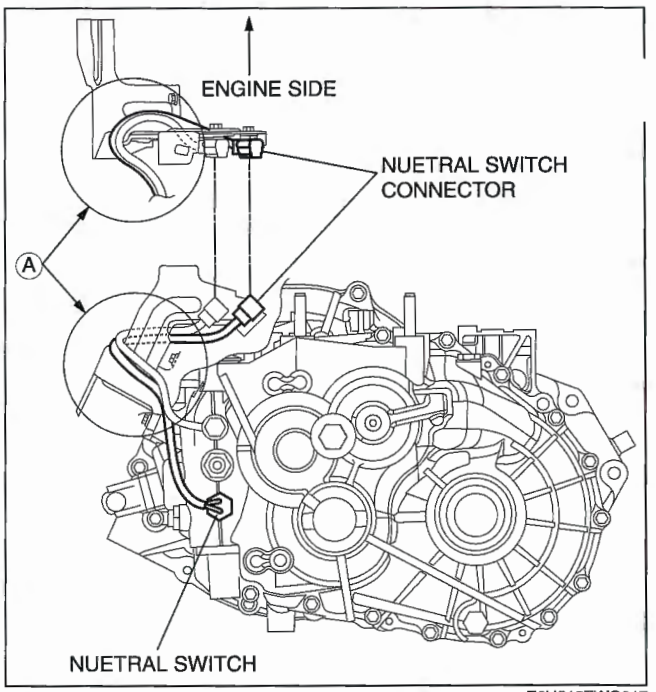

E6U515ZWC017

MANUAL TRANSAXLE REMOVAL/INSTALLATION [A26MX-R]

E6U051500000W08

1. Remove the transfer. (See 03–16–3 TRANSFER REMOVAL/INSTALLATION)
2. Disconnect the negative battery cable.
3. Remove the air cleaner. (See 01–13B–4 INTAKE AIR SYSTEM REMOVAL/INSTALLATION [L3 WITH TC])
4. Remove the charge air cooler. (See 01–13B–4 INTAKE AIR SYSTEM REMOVAL/INSTALLATION [L3 WITH TC])
5. Disconnect the reverse switch and neutral switch connector.
6. Remove the starter. (See 01–19B–2 STARTER REMOVAL/INSTALLATION [L3 WITH TC])
7. Drain the transaxle oil into a suitable container.

Warning

- **Improperly jacking a transaxle is dangerous. It can slip off the jack and may cause serious injury.**

8. Remove in the order indicated in the figure.
9. Install in the reverse order of removal.
10. Add the specified amount of specified transaxle oil. (See 05–15C–2 TRANSAXLE OIL REPLACEMENT [A26MX-R].)
11. Warm up the engine and transaxle, inspect for oil leakage, and inspect the transaxle operation.

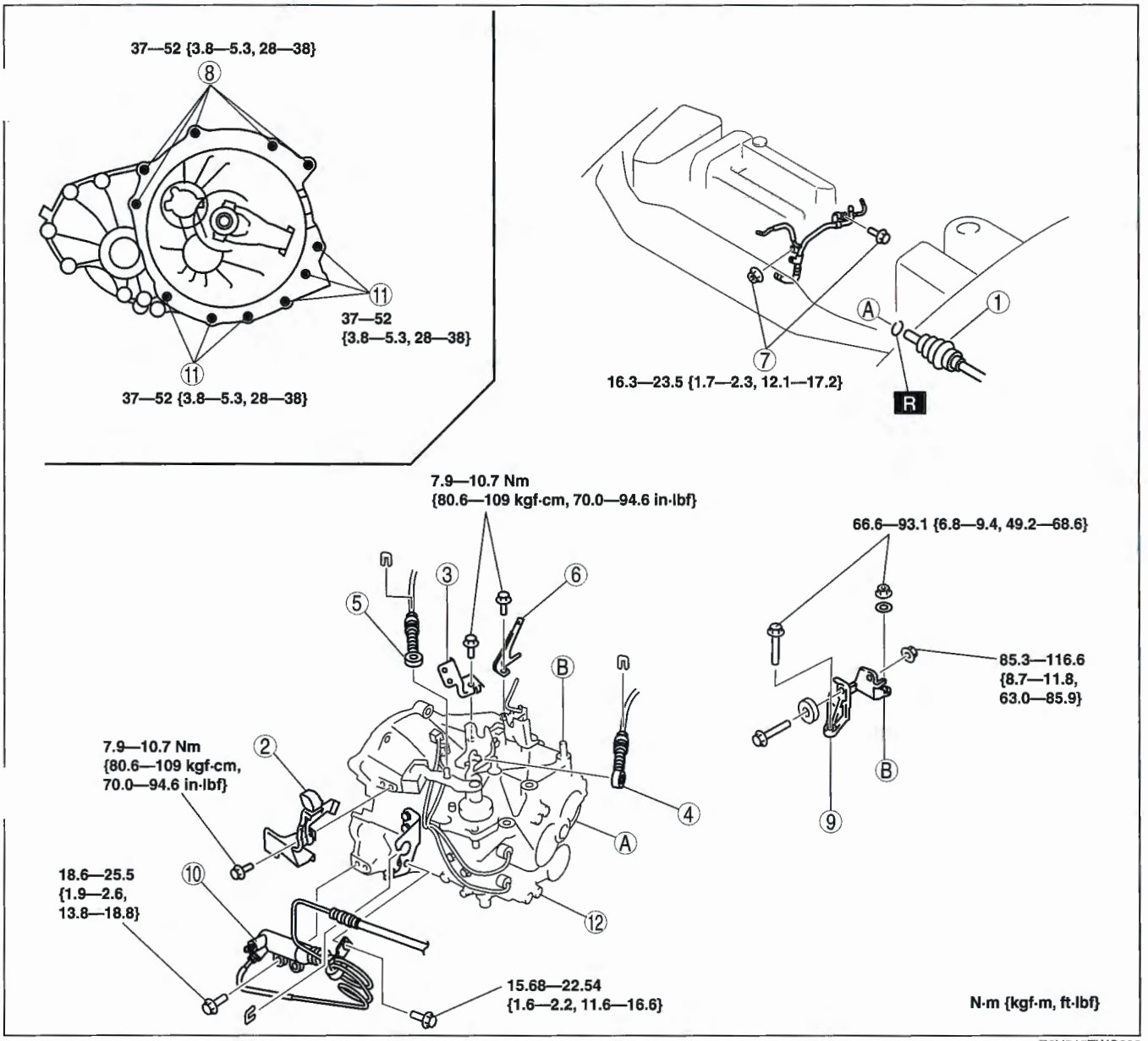

E6U515ZWC002

1	Drive shaft
2	Engine wiring harness bracket
3	HO2S bracket
4	Selector cable
5	Shift cable
6	Wiring harness bracket
7	Water pipe installation bolt and nut
8	Transaxle mounting bolt (upper side)

9	No.4 engine mount bracket (See 05–15C–8 No.4 Engine Mount Bracket Installation Note)
10	Clutch release cylinder
11	Transaxle mounting bolt (lower side)
12	Manual transaxle (See 05–15C–7 Manual Transaxle Removal Note) (See 05–15C–8 Manual Transaxle Installation Note)

No.4 Engine Mount Bracket Removal Note

1. Install the **SST** using the following procedure.

Caution

- **Refer to the SST instruction manual for the basic handing procedure.**

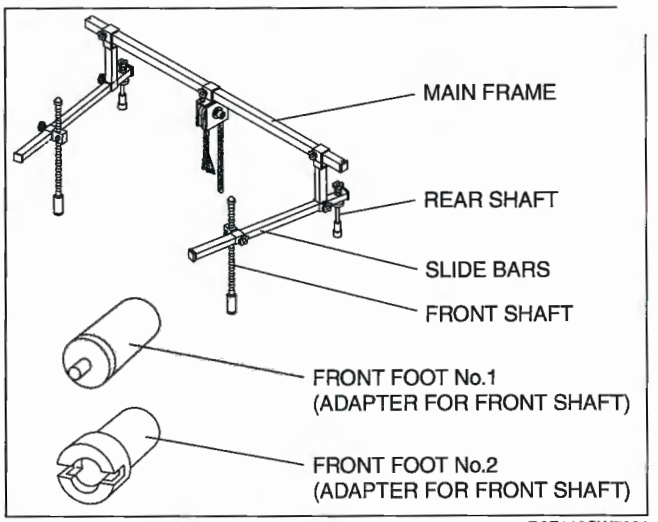

D6E110CW7001

(1) Install the right rear shaft of the **SST** to the bolt of the right shock absorber as shown in the figure.
(2) Install the left rear shaft of the **SST** to the bolt of the left shock absorber. (Identical position to the right side)

Caution

- **When setting the SST on the right side, make sure it doesn't interfere with the DSC HU/CM.**

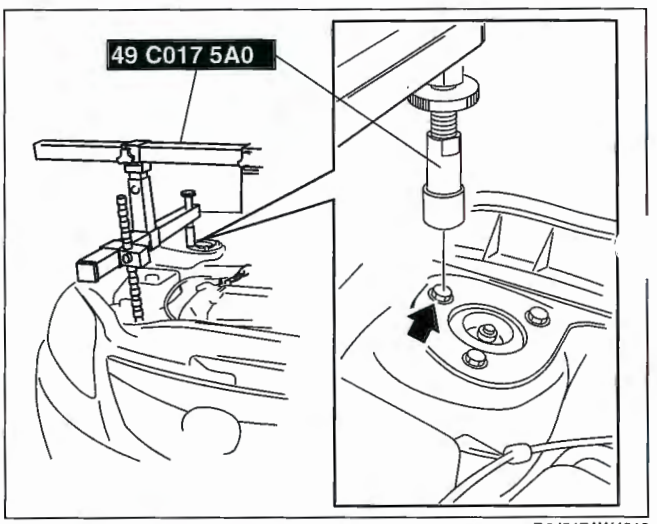

D6J517AW4012

(3) Install the left/right front shaft of the **SST** with front foot No.2 to the bolt as shown in the figure.
(4) Adjust the positions of the **SST** side bars so that they are the same height (left and right) and horizontal.
(5) Make sure each joint is securely tightened.

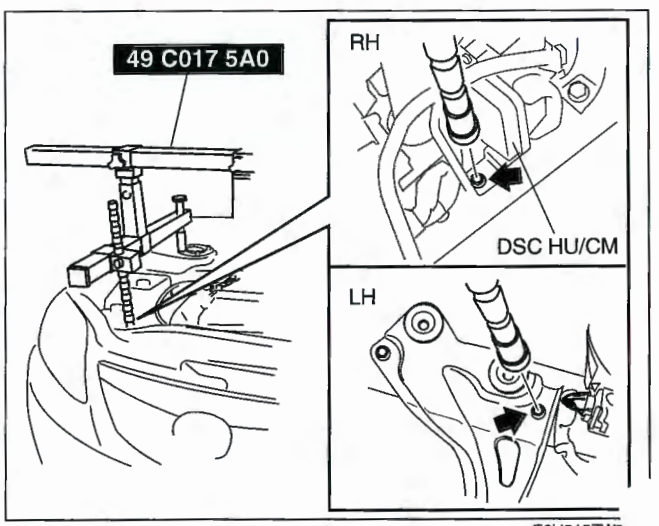

E6U515ZW7

2. Support the engine using the **SST**.

Note
- The SST (49 E017 5A0) can be used in place of the SST (49 C017 5A0).

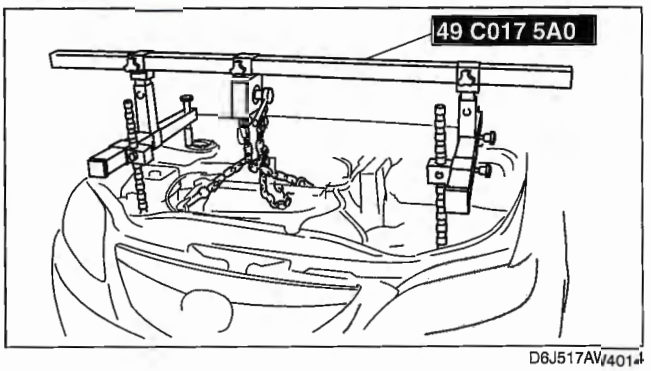

D6J517AW4014

3. Remove the No.4 engine mount bracket.

Manual Transaxle Removal Note

1. Loosen the bolt shown in the figure and set the brake pipe out of the way.

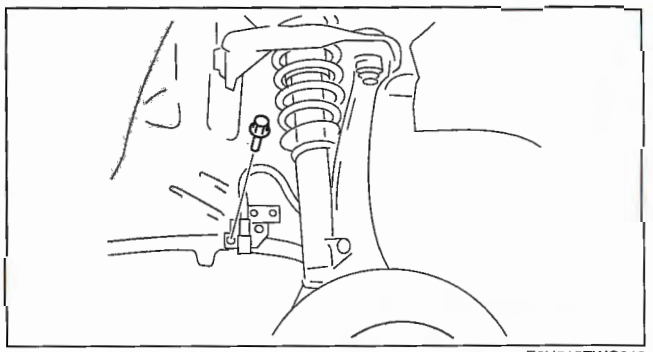
E6U515ZWC013

2. Lean the engine toward the transaxle.

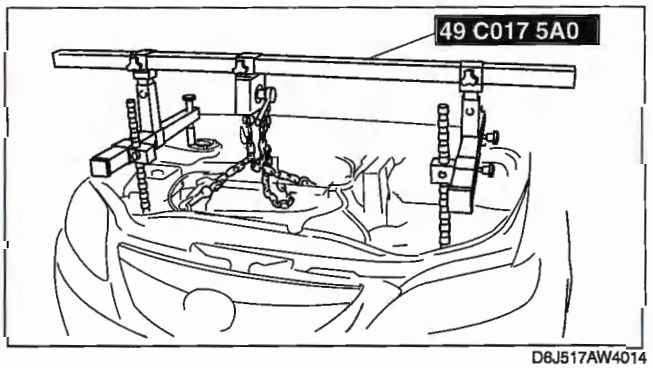

D6J517AW4014

3. Support the transaxle on a jack.
4. Remove the transaxle mounting bolts.
5. Remove the transaxle.

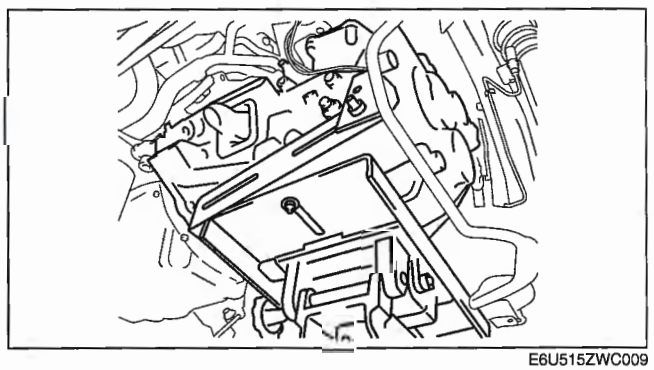
E6U515ZWC009

Manual Transaxle Installation Note

1. Set the transaxle on a jack and lift into place.
2. Install the transaxle mounting bolts.

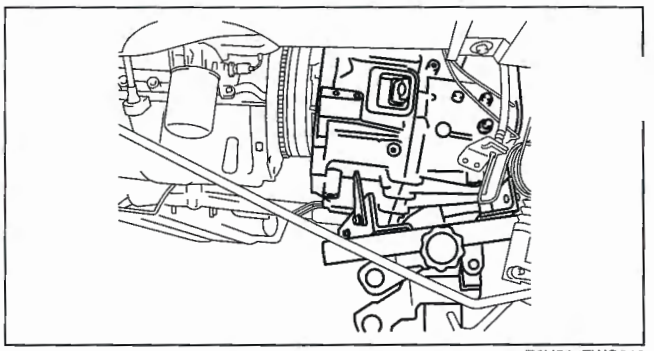

E6U515ZWC010

3. Tighten the bolt shown in the figure.

   Tightening torque
   18.5—25.5 N·m {1.89—2.60 kgf·m, 13.7—18.8 ft·lbf}

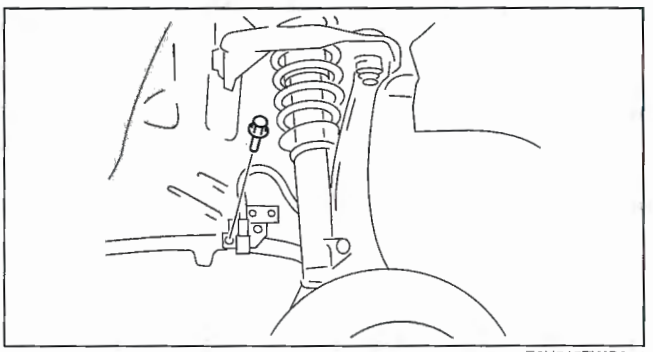

E6U515ZWC013

No.4 Engine Mount Bracket Installation Note

1. Set the transaxle on a garage jack and lift it.
2. Verify that the engine mount rubber is installed as shown.
3. By aligning the holes with the stud bolts, install the No.4 engine mount bracket to the transaxle.
4. Align the hole of the No.4 engine mount bracket with the No.4 engine mount rubber on vehicle, and temporarily tighten nut D.
5. Lightly tighten nuts B, C and bolt A.
6. Tighten nuts B, C in order of B→C, then bolt A.

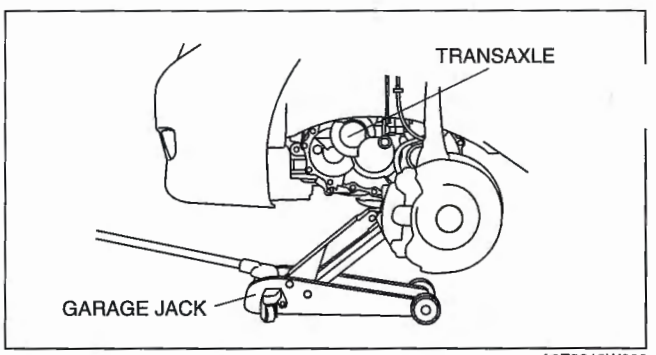

A6E5212W023

7. Tighten nut D.

   Tightening torque
   A, B, C: 66.6—93.1 N·m
   {6.8—9.4 kgf·m, 49.2—68.6 ft·lbf}
   D: 85.3—116.6 N·m
   {8.7—11.8 kgf·m, 62.9—85.9 ft·lbf}

8. Remove the garage jack.
9. Remove the **SST** (49 C017 5A0).

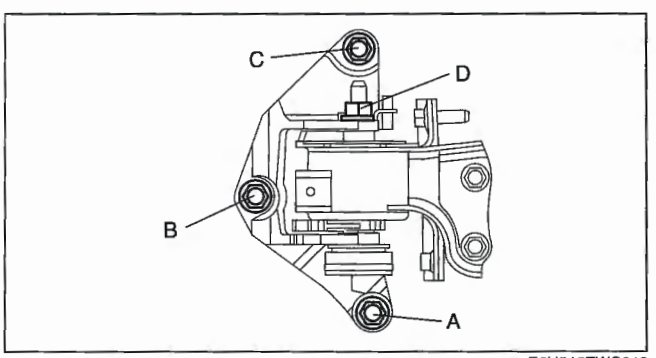

E6U515ZWC012

INSPECTION AFTER TRANSAXLE INSTALLATION [A26MX-R]

E6U051500000W09

Note

- Perform the following inspection only when the transaxle has been overhauled.

1. Perform a road test and inspect the following items:
   (1) No abnormal noise in each shift position.
   (2) Smooth shift operation when shifting gears.
   (3) No gear slipout after shifting gears.
   (4) Back-up light switch operates correctly.

05–16 MANUAL TRANSAXLE SHIFT MECHANISM

MANUAL TRANSAXLE SHIFT MECHANISM LOCATION INDEX [G35M-R, A65M-R] 05–16–1
MANUAL TRANSAXLE SHIFT MECHANISM LOCATION INDEX [A26MX-R] 05–16–2
SHIFT MECHANISM REMOVAL/INSTALLATION [G35M-R, A65M-R] 05–16–3
Select Cable Installation Note 05–16–5
SHIFT MECHANISM REMOVAL/INSTALLATION [A26MX-R] 05–16–6
Shift Cable and Select Cable Removal Note 05–16–7
Shift Cable and Select Cable Installation Note 05–16–7

MANUAL TRANSAXLE SHIFT MECHANISM LOCATION INDEX [G35M-R, A65M-R]

E6U051600000W01

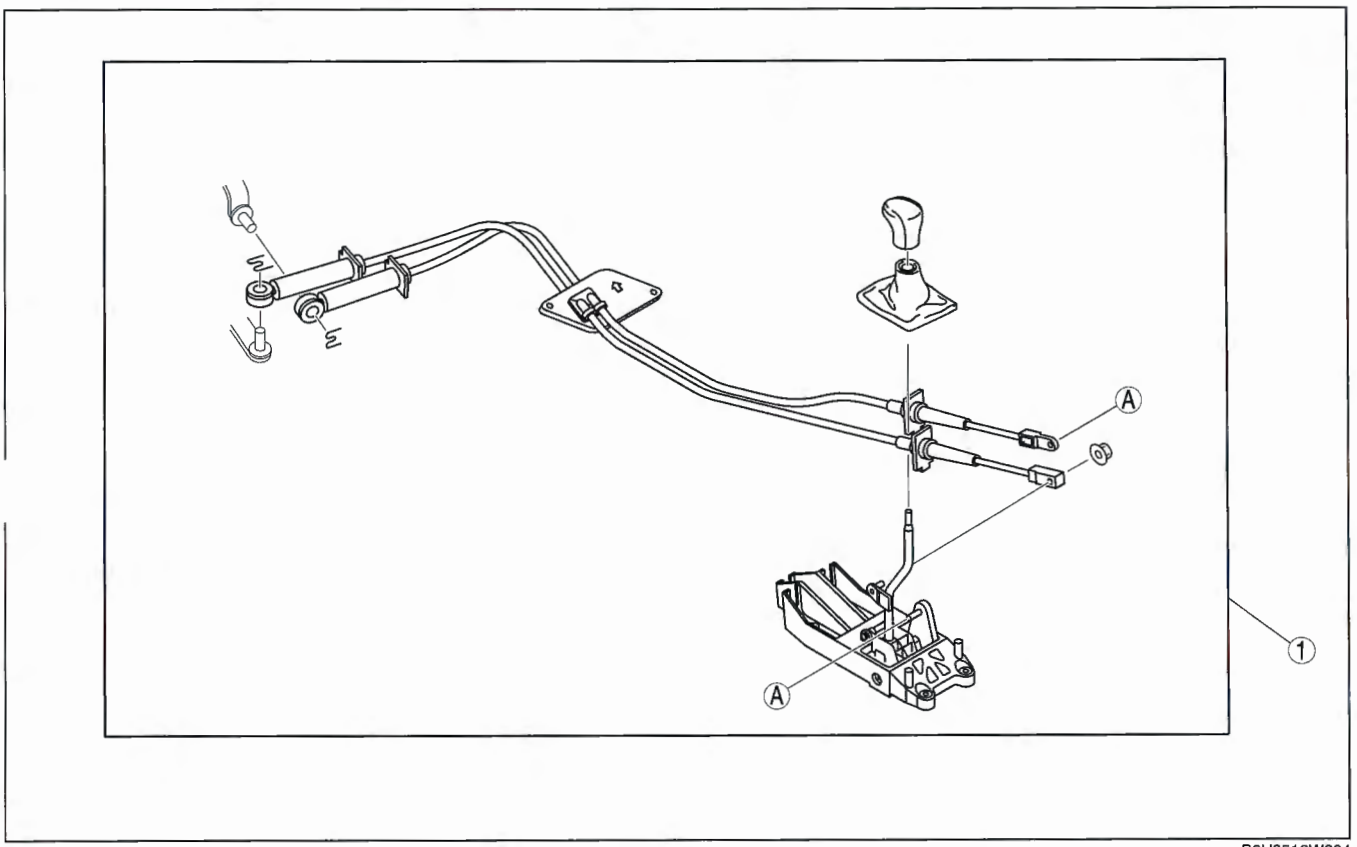

B6U0516W004

1	Shift mechanism (See 05–16–3 SHIFT MECHANISM REMOVAL/INSTALLATION [G35M-R, A65M-R].)

MANUAL TRANSAXLE SHIFT MECHANISM LOCATION INDEX [A26MX-R]

E6U051600000W02

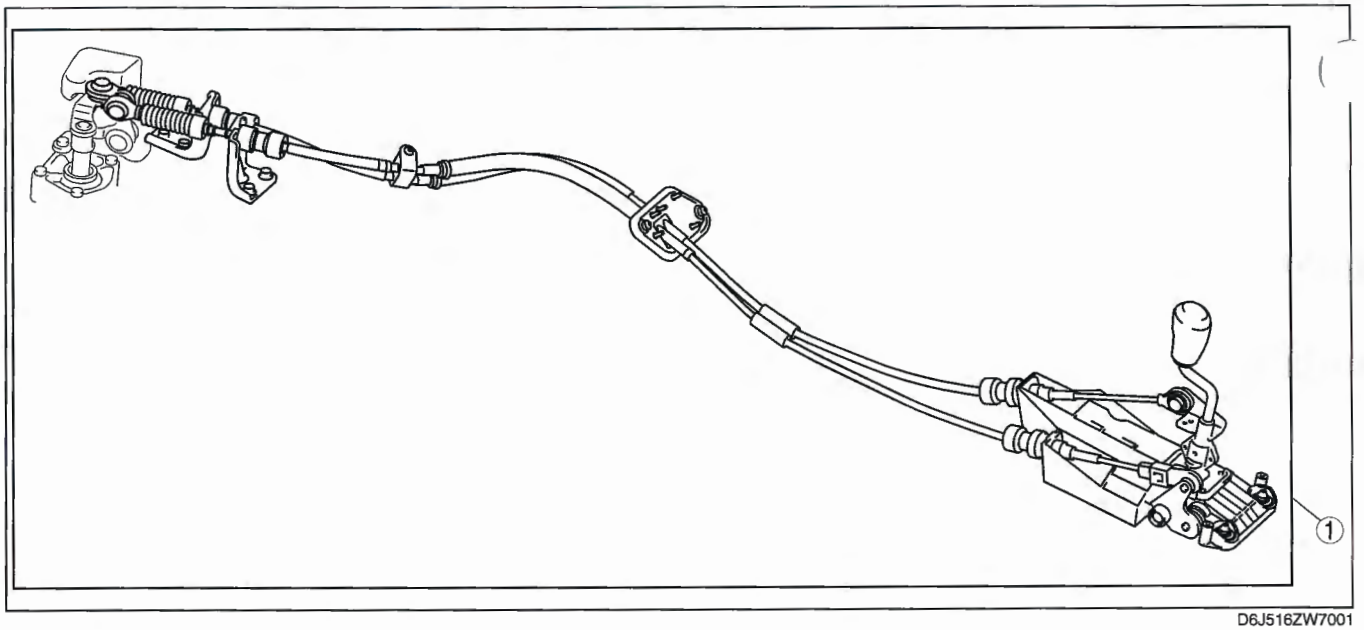

D6J516ZW7001

1	Shift mechanism (See 05–16–6 SHIFT MECHANISM REMOVAL/ INSTALLATION [A26MX-R])

SHIFT MECHANISM REMOVAL/INSTALLATION [G35M-R, A65M-R]

E6U051646010W01

1. Remove the battery and battery tray.
2. Remove the air cleaner component.
   (See 01–13A–4 INTAKE AIR SYSTEM REMOVAL/INSTALLATION [L3].)
   (See 01–13C–2 INTAKE AIR SYSTEM REMOVAL/INSTALLATION [AJ].)
3. Remove the dashboard completely.
   (See 09–17–4 DASHBOARD REMOVAL/INSTALLATION.)
4. Remove the SAS control module.
   (See 08–10–12 SAS CONTROL MODULE REMOVAL/INSTALLATION.)
5. Remove the climate control unit. (See 07–40–30 CLIMATE CONTROL UNIT REMOVAL [L3, AJ].) (See 07–40–30 CLIMATE CONTROL UNIT INSTALLATION [L3, AJ].)
6. Remove the rear heat duct. (See 07–11–14 REAR HEAT DUCT REMOVAL/INSTALLATION [L3, AJ].)
7. Remove in the order indicated in the table.
8. Install in the reverse order of removal.
9. After installation, verify that the shift lever can be shifted smoothly into each position.

G35M-R manual transaxle models

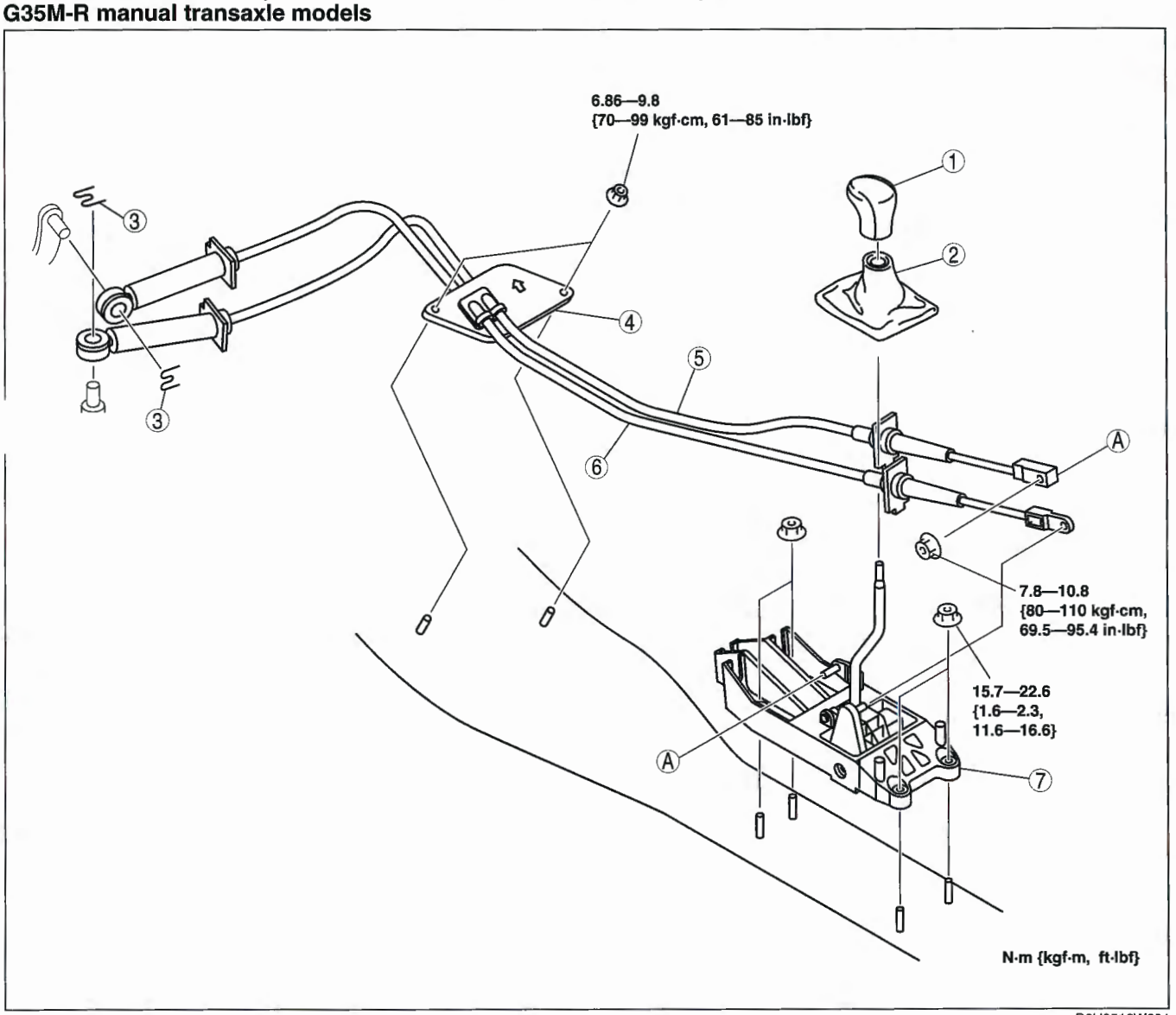

B6U0516W001

A65M-R manual transaxle models

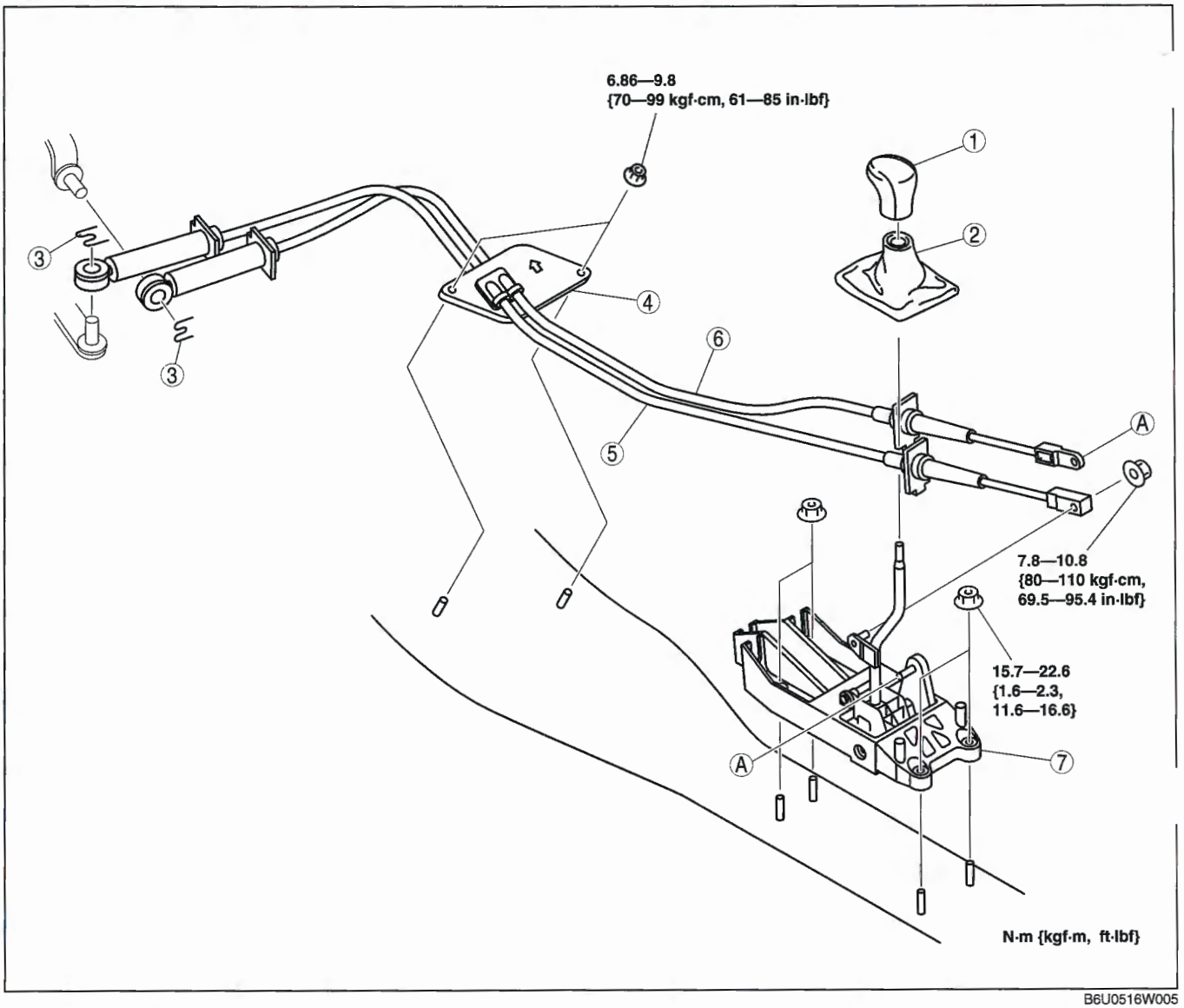

B6U0516W005

1	Shift lever knob
2	Boot panel
3	Clip
4	Seal plate

5	Shift cable
6	Select cable (See 05–16–5 Select Cable Installation Note.)
7	Shift lever assembly

Select Cable Installation Note

1. Remove the center console.
2. Make sure that the shift lever (transaxle side) is in neutral.
   Unlock the lock piece of the select cable (shift lever side) in the order shown in the figure.

5M-R manual transaxle models

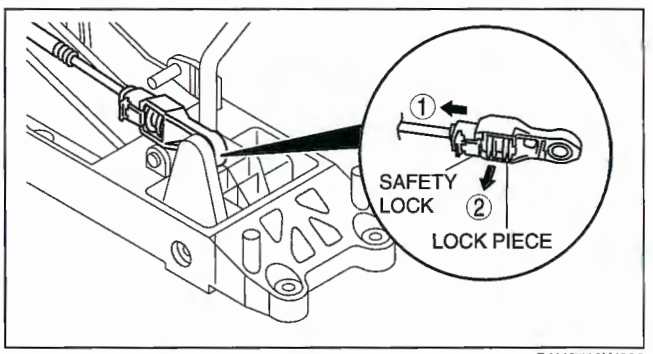

B6U0516W002

A65M-R manual transaxle models

4. Shift the shift lever to neutral.
5. Lock the lock piece of the selector cable (shift cable side) in the order shown in the figure.

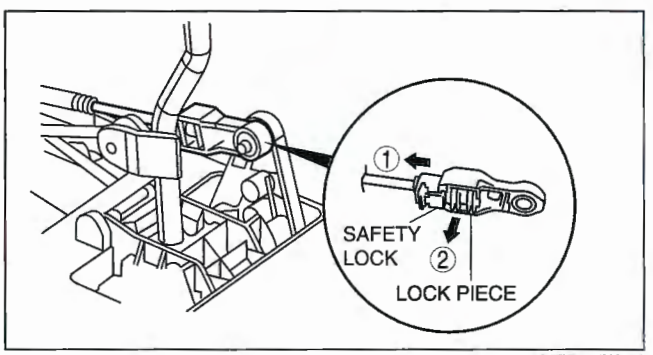

A6E5214W002

G35M-R manual transaxle models

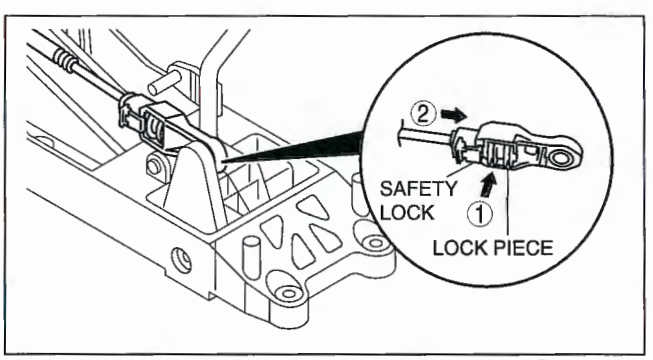

B6U0516W003

A65M-R manual transaxle models

6. Install the center console.
7. Shift the shift lever from neutral to other position, and make sure that there are no other components in that area to interfere with the lever.

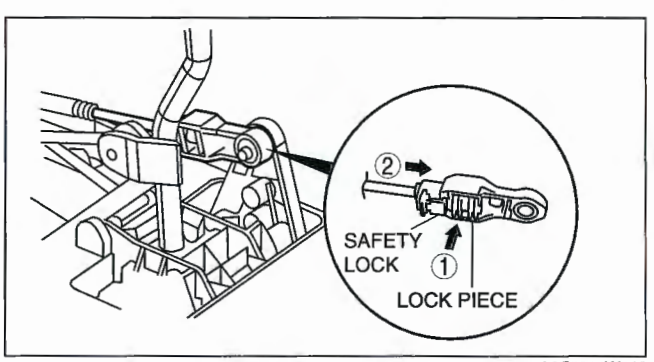

A6E5214W003

SHIFT MECHANISM REMOVAL/INSTALLATION [A26MX-R]

E6U051646010W04

1. Remove the battery and battery tray.
2. Remove the air cleaner component.
   (See 01–13B–4 INTAKE AIR SYSTEM REMOVAL/INSTALLATION [L3 WITH TC].)
3. Remove the dashboard completely.
   (See 09–17–4 DASHBOARD REMOVAL/INSTALLATION.)
4. Remove the SAS control module.
   (See 08–10–12 SAS CONTROL MODULE REMOVAL/INSTALLATION.)
5. Remove the climate control unit. (See 07–40–31 CLIMATE CONTROL UNIT REMOVAL/INSTALLATION [L3 WITH TC].)
6. Remove the rear heat duct. (See 07–11–14 REAR HEAT DUCT REMOVAL/INSTALLATION [L3 WITH TC].)
7. Remove in the order indicated in the table.
8. Install in the reverse order of removal.
9. After installation, verify that the shift lever can be shifted smoothly into each position.

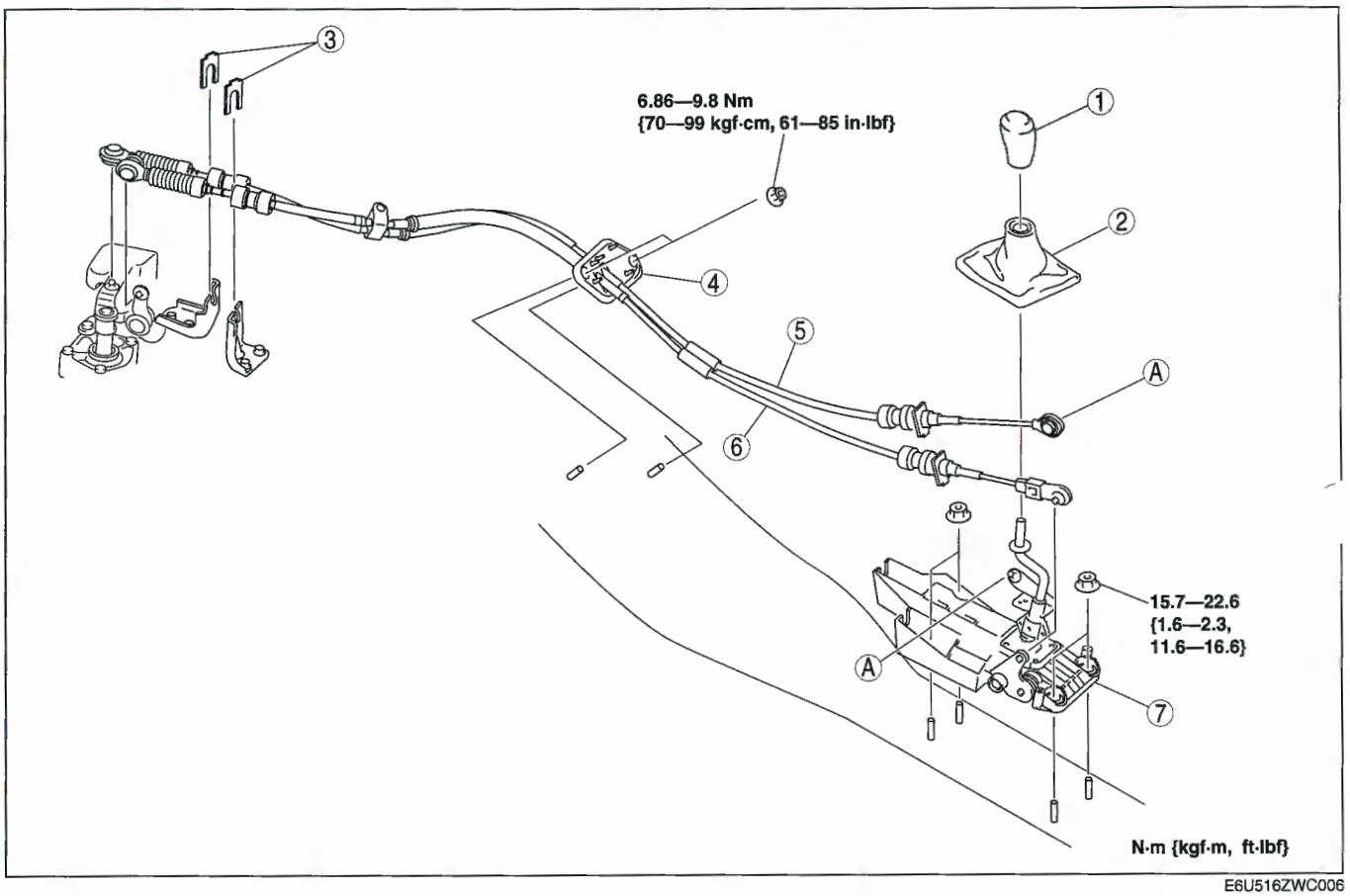

E6U516ZWC006

1	Shift lever knob
2	Boot panel
3	Clip
4	Seal plate
5	Shift cable (See 05–16–7 Shift Cable and Select Cable Removal Note) (See 05–16–7 Shift Cable and Select Cable Installation Note)

6	Select cable (See 05–16–7 Shift Cable and Select Cable Removal Note) (See 05–16–7 Shift Cable and Select Cable Installation Note)
7	Shift lever assembly

Shift Cable and Select Cable Removal Note

1. Remove the both shift cable end and select cable end using a fastener remover.

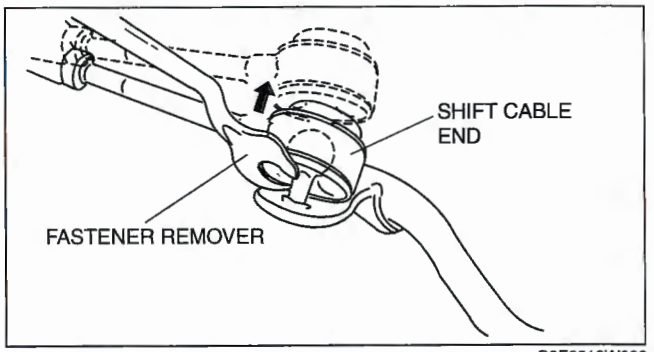

B3E0516W006

Shift Cable and Select Cable Installation Note

1. Remove the center console.
2. Install the shift cable and select cable to the mount rubber bracket turning the marking upward
3. Make sure that the shift lever (transaxle side) is in neutral.

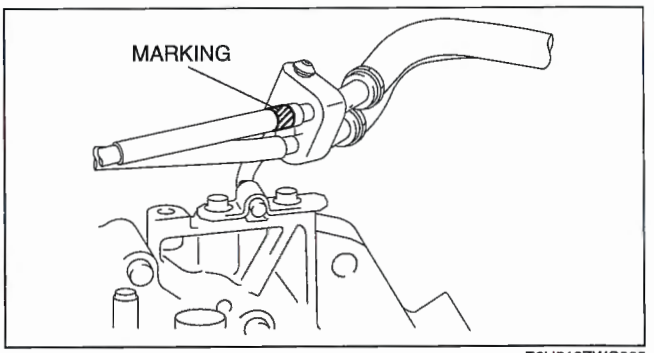

E6U516ZWC005

4. Unlock the lock piece of the select cable (shift lever side) in the order shown in the figure.
   Shift the shift lever to neutral.

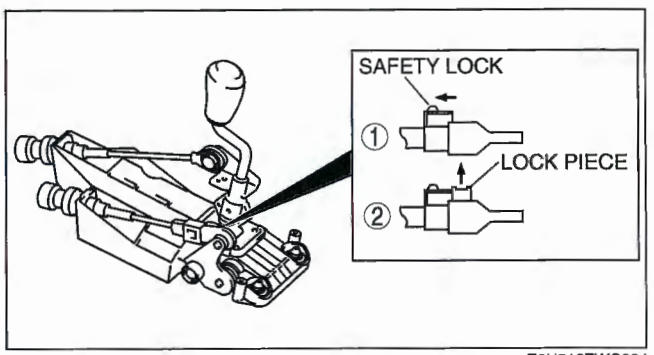

E6U516ZWC004

6. Lock the lock piece of the selector cable (shift cable side) in the order shown in the figure.
7. Install the center console.
8. Shift the shift lever from neutral to other position, and make sure that there are no other components in that area to interfere with the lever.

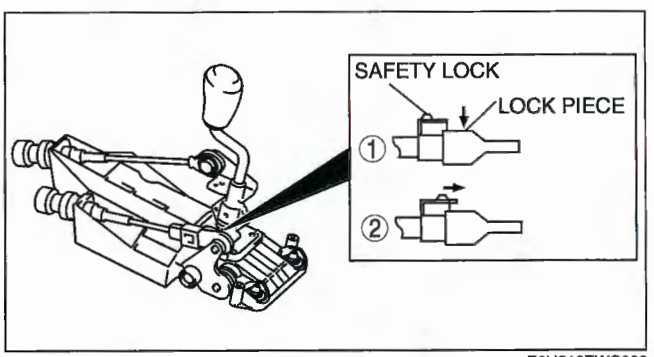

E6U516ZWC003

05–17A AUTOMATIC TRANSAXLE [FS5A-EL]

AUTOMATIC TRANSAXLE LOCATION INDEX [FS5A-EL] 05–17A–3
MECHANICAL SYSTEM TEST [FS5A-EL] 05–17A–4
Mechanical System Test Preparation.. 05–17A–4
Line Pressure Test 05–17A–5
Stall Test 05–17A–6
Time Lag Test 05–17A–7
ROAD TEST [FS5A-EL] 05–17A–7
Road Test Preparation 05–17A–7
Shift Diagram 05–17A–8
D Range Test 05–17A–8
M Range Test 05–17A–10
P Position Test 05–17A–10
AUTOMATIC TRANSAXLE FLUID (ATF) INSPECTION [FS5A-EL] 05–17A–10
Automatic Transaxle Fluid (ATF) Condition Inspection 05–17A–10
Automatic Transaxle Fluid (ATF) Level Inspection 05–17A–11
AUTOMATIC TRANSAXLE FLUID (ATF) REPLACEMENT [FS5A-EL] 05–17A–12
TRANSAXLE RANGE (TR) SWITCH INSPECTION [FS5A-EL] 05–17A–12
Operating Inspection 05–17A–12
Continuity Inspection 05–17A–13
TRANSAXLE RANGE (TR) SWITCH REMOVAL/INSTALLATION [FS5A-EL] 05–17A–14
TRANSAXLE RANGE (TR) SWITCH ADJUSTMENT [FS5A-EL] ... 05–17A–17
TRANSAXLE FLUID TEMPERATURE (TFT) SENSOR INSPECTION [FS5A-EL] 05–17A–18
On-Vehicle Inspection 05–17A–18
Off-Vehicle Inspection 05–17A–19
TRANSAXLE FLUID TEMPERATURE (TFT) SENSOR REMOVAL/INSTALLATION [FS5A-EL] 05–17A–20
OIL PRESSURE SWITCH INSPECTION [FS5A-EL] 05–17A–21
On-vehicle Inspection (harness inspection) 05–17A–21
On-vehicle Inspection (oil pressure switch inspection) 05–17A–21
Off-vehicle inspection 05–17A–22
OIL PRESSURE SWITCH REMOVAL/INSTALLATION [FS5A-EL] 05–17A–22
INPUT/TURBINE SPEED SENSOR INSPECTION [FS5A-EL] 05–17A–22
INPUT/TURBINE SPEED SENSOR REMOVAL/INSTALLATION [FS5A-EL] 05–17A–23
INTERMEDIATE SENSOR INSPECTION [FS5A-EL] 05–17A–23
Visual Inspection 05–17A–23
Wave profile Inspection 05–17A–24
INTERMEDIATE SENSOR REMOVAL/INSTALLATION [FS5A-EL] 05–17A–25
VEHICLE SPEED SENSOR (VSS) INSPECTION [FS5A-EL] 05–17A–25
Visual Inspection 05–17A–25
Wave profile Inspection 05–17A–26
VEHICLE SPEED SENSOR (VSS) REMOVAL/INSTALLATION [FS5A-EL] 05–17A–27
SOLENOID VALVE INSPECTION (PRIMARY CONTROL VALVE BODY) [FS5A-EL] 05–17A–28
Resistance Inspection (On-Vehicle Inspection) 05–17A–28
Operating Inspection 05–17A–28
Resistance Inspection (Off-Vehicle Inspection) 05–17A–29
SOLENOID VALVE REMOVAL/INSTALLATION (PRIMARY CONTROL VALVE BODY) [FS5A-EL] 05–17A–30
SOLENOID VALVE INSPECTION (SECONDARY CONTROL VALVE BODY) [FS5A-EL] 05–17A–31
Resistance Inspection (On-Vehicle Inspection) 05–17A–31
Operating Inspection 05–17A–31
Resistance Inspection (Off-Vehicle Inspection) 05–17A–32
SOLENOID VALVE REMOVAL/INSTALLATION (SECONDARY CONTROL VALVE BODY) [FS5A-EL] 05–17A–32
TCM INSPECTION [FS5A-EL] 05–17A–33
Terminal Voltage Table (Reference) ... 05–17A–33
Inspection Using an Oscilloscope (Reference) 05–17A–36
TCM REMOVAL/INSTALLATION [FS5A-EL] 05–17A–38
AUTOMATIC TRANSAXLE REMOVAL/INSTALLATION [FS5A-EL] 05–17A–39
No.4 Engine Mount Bracket Removal Note 05–17A–41
Transaxle Removal Note 05–17A–43
Transaxle Installation Note 05–17A–43
Torque Converter Nuts Removal Note 05–17A–44
Torque Converter Nuts Installation Note 05–17A–44
No.1 Engine Mount and No.4 Engine Mount Bracket Installation Note 05–17A–45
OIL SEAL REPLACEMENT [FS5A-EL] 05–17A–45
PRIMARY CONTROL VALVE BODY REMOVAL [FS5A-EL] 05–17A–46
On-Vehicle Removal 05–17A–46
PRIMARY CONTROL VALVE BODY INSTALLATION [FS5A-EL] 05–17A–47
On-Vehicle Installation 05–17A–47
SECONDARY CONTROL VALVE BODY REMOVAL [FS5A-EL] 05–17A–48
On-Vehicle Removal 05–17A–48
SECONDARY CONTROL VALVE BODY INSTALLATION [FS5A-EL] 05–17A–49
On-Vehicle Installation 05–17A–49

OIL COOLER FLUSHING [FS5A-EL] . . . 05–17A–51
Power Flushing **05–17A–51**
OIL COOLER REMOVAL/INSTALLATION [FS5A-EL] 05–17A–52
Radiator (In Tank Oil Cooler) Installation Note **05–17A–53**
Oil Pipe, Hose Clamp, Oil Hose Installation Note **05–17A–53**
OIL COOLER DISASSEMBLY/ASSEMBLY [FS5A-EL] 05–17A–54
Radiator Outer Tank (In Tank Oil Cooler) Removal Note . . . **05–17A–55**
Radiator Outer Tank (In Tank Oil Cooler) Installation Note **05–17A–**
DRIVE PLATE REMOVAL/INSTALLATION [FS5A-EL] 05–17A–56
Drive Plate Mounting Bolts Removal Note **05–17A–57**
Drive Plate Installation Note **05–17A–57**

AUTOMATIC TRANSAXLE LOCATION INDEX [FS5A-EL]

E6U051700000W06

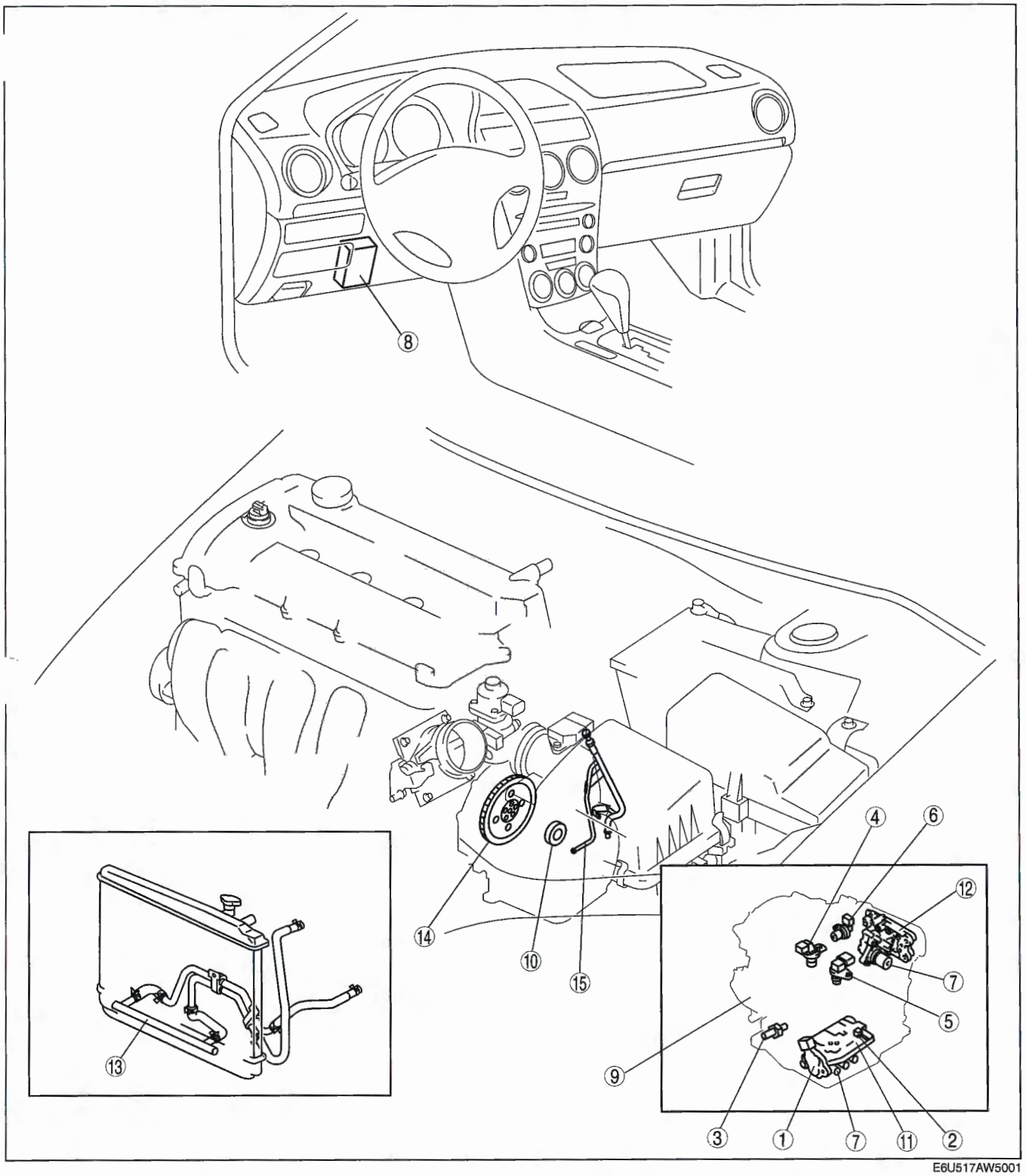

E6U517AW5001

1	Transaxle range (TR) switch (See 05–17A–12 TRANSAXLE RANGE (TR) SWITCH INSPECTION [FS5A-EL]) (See 05–17A–14 TRANSAXLE RANGE (TR) SWITCH REMOVAL/INSTALLATION [FS5A-EL]) (See 05–17A–17 TRANSAXLE RANGE (TR) SWITCH ADJUSTMENT [FS5A-EL])

2	Transaxle fluid temperature (TFT) sensor (See 05–17A–18 TRANSAXLE FLUID TEMPERATURE (TFT) SENSOR INSPECTION [FS5A-EL]) (See 05–17A–20 TRANSAXLE FLUID TEMPERATURE (TFT) SENSOR REMOVAL/INSTALLATION [FS5A-EL])

3	Oil pressure switch (See 05–17A–21 OIL PRESSURE SWITCH INSPECTION [FS5A-EL]) (See 05–17A–22 OIL PRESSURE SWITCH REMOVAL/INSTALLATION [FS5A-EL])
4	Input/turbine speed sensor (See 05–17A–22 INPUT/TURBINE SPEED SENSOR INSPECTION [FS5A-EL]) (See 05–17A–23 INPUT/TURBINE SPEED SENSOR REMOVAL/INSTALLATION [FS5A-EL])
5	Intermediate sensor (See 05–17A–23 INTERMEDIATE SENSOR INSPECTION [FS5A-EL]) (See 05–17A–25 INTERMEDIATE SENSOR REMOVAL/INSTALLATION [FS5A-EL])
6	Vehicle speed sensor (See 05–17A–25 VEHICLE SPEED SENSOR (VSS) INSPECTION [FS5A-EL]) (See 05–17A–27 VEHICLE SPEED SENSOR (VSS) REMOVAL/INSTALLATION [FS5A-EL])
7	Solenoid valve (See 05–17A–28 SOLENOID VALVE INSPECTION (PRIMARY CONTROL VALVE BODY) [FS5A-EL]) (See 05–17A–30 SOLENOID VALVE REMOVAL/INSTALLATION (PRIMARY CONTROL VALVE BODY) [FS5A-EL]) (See 05–17A–31 SOLENOID VALVE INSPECTION (SECONDARY CONTROL VALVE BODY) [FS5A-EL]) (See 05–17A–32 SOLENOID VALVE REMOVAL/INSTALLATION (SECONDARY CONTROL VALVE BODY) [FS5A-EL])
8	TCM (See 05–17A–33 TCM INSPECTION [FS5A-EL]) (See 05–17A–38 TCM REMOVAL/INSTALLATION [FS5A-EL])
9	Automatic transaxle (See 05–17A–39 AUTOMATIC TRANSAXLE REMOVAL/INSTALLATION [FS5A-EL])
10	Oil seal (See 05–17A–45 OIL SEAL REPLACEMENT [FS5A-EL])
11	Primary control valve body (See 05–17A–46 PRIMARY CONTROL VALVE BODY REMOVAL [FS5A-EL]) (See 05–17A–47 PRIMARY CONTROL VALVE BODY INSTALLATION [FS5A-EL])
12	Secondary control valve body (See 05–17A–48 SECONDARY CONTROL VALVE BODY REMOVAL [FS5A-EL]) (See 05–17A–49 SECONDARY CONTROL VALVE BODY INSTALLATION [FS5A-EL])
13	Oil cooler (See 05–17A–51 OIL COOLER FLUSHING [FS5A-EL]) (See 05–17A–52 OIL COOLER REMOVAL/INSTALLATION [FS5A-EL]) (See 05–17A–54 OIL COOLER DISASSEMBLY/ASSEMBLY [FS5A-EL])
14	Drive plate (See 05–17A–56 DRIVE PLATE REMOVAL/INSTALLATION [FS5A-EL])
15	Automatic transaxle fluid (ATF) (See 05–17A–10 AUTOMATIC TRANSAXLE FLUID (ATF) INSPECTION [FS5A-EL]) (See 05–17A–12 AUTOMATIC TRANSAXLE FLUID (ATF) REPLACEMENT [FS5A-EL])

MECHANICAL SYSTEM TEST [FS5A-EL]

E6U051700000W12

Mechanical System Test Preparation

1. Apply the parking brake and use wheel chocks at the front and rear of the wheels.
2. Inspect the engine coolant. (See 01–12A–3 COOLING SYSTEM SERVICE WARNINGS [L3, AJ].) (See 01–12A–3 ENGINE COOLANT LEVEL INSPECTION [L3, AJ].)
3. Inspect the engine oil. (See 01–11A–3 ENGINE OIL LEVEL INSPECTION [L3, AJ].)
4. Inspect the ATF levels. (See 05–17A–11 Automatic Transaxle Fluid (ATF) Level Inspection.)
5. Inspect the idle speed. (See 01–10A–30 Idle Speed Inspection.)
6. Inspect the ignition timing. (See 01–10A–29 Ignition Timing Inspection.)

Line Pressure Test

1. Perform mechanical system test preparation. (See 05–17A–4 Mechanical System Test Preparation.)

Warning

- **Removing the square-head plug when the ATF is hot can be dangerous. Hot ATF can come out of the opening and badly burn you. Before removing the square-head plug, allow the ATF to cool.**

2. Connect the **SSTs** (49 0378 400C, 49 B019 901B and 49 H019 002) to the line pressure inspection port.
3. Start the engine and shift the selector lever to D range and read the line pressure at idle.

Warning

- **Removing the SST when the ATF is hot can be dangerous. Hot ATF can come out of the opening and badly burn you. Before removing the SST, allow the ATF to cool.**

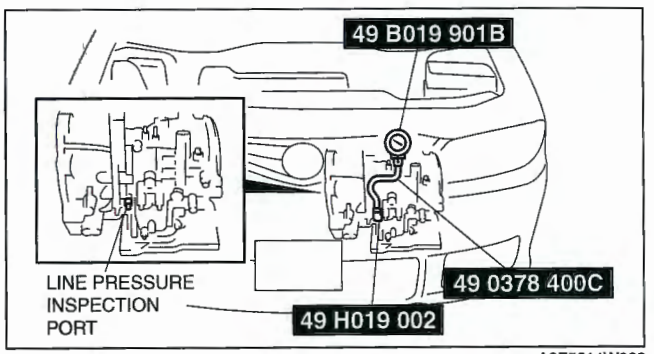

A6E5614W002

4. Turn the engine off and remove the **SST** (49 B019 901B), and replace the gauge part of the **SST** (49 0378 400C).

Caution

- **Do not maintain WOT in any position/range for more than 5 seconds, or transaxle damage will occur.**

5. Start the engine and firmly depress the brake pedal with the left foot, and then depress the accelerator pedal to floor (WOT) with the right.
6. When the engine speed no longer increases, quickly read the line pressure and release the accelerator pedal.
7. Shift the selector lever to N position and let the engine idle for **1 minute** or more to cool the ATF.
8. Read the line pressure at idle and at the engine stall speed for the M (1GR, 2GR) range and R position in the same manner.

Line pressure specification

Position/range	Line pressure (kPa {kgf/cm^2, psi})	
	Idle	Stall
D, M (1GR, 2GR)	330—470 {3.4—4.8, 48—68}	1,200—1,320 {12.2—13.5, 174—191}
R	490—710 {5.0—7.2, 71—102}	1,680—2,010 {17.2—20.4, 244—291}

9. Shift the selector lever to P position and turn off the engine.

Warning

- **Removing the SST when the ATF is hot can be dangerous. Hot ATF can come out of the opening and badly burn you. Before removing the SST, allow the ATF to cool.**

10. Remove the **SST**.
11. Install a new square head plug in the inspection port.

Tightening torque

4.8—9.8 N·m {49—99 kgf·cm, 43—85 in·lbf}

Evaluation of line pressure test

Condition	Possible cause
Low pressure in all positions/ranges	• Worn oil pump • Oil leaking from oil pump, control valve body, and/or transaxle case • Pressure regulator valve stuck • Pressure control solenoid malfunction • Solenoid reducing valve stuck
Low pressure in D, M (1GR, 2GR) only	• Oil leaking from forward clutch hydraulic circuit
Low pressure in M (2GR) only	• Oil leaking from 2-4 brake band hydraulic circuit
Low pressure in M (1GR), R only	• Oil leaking from low and reverse brake hydraulic circuit
Low pressure in R only	• Oil leaking from reverse clutch hydraulic circuit
Higher pressure in all positions/ranges	• Pressure control solenoid malfunction and/or open harness • Pressure regulator valve stuck • TCM malfunction

Stall Test

1. Perform mechanical system test preparation. (See 05–17A–4 Mechanical System Test Preparation.)
2. Start the engine and shift the selector lever to R position.

Caution

- **Do not maintain WOT in any position/range for more than 5 seconds, or transaxle damage will occur.**

3. Firmly depress the brake pedal with the left foot, and depress the accelerator pedal to floor (WOT) with the right.
4. When the engine speed no longer increases, quickly read the engine speed and release the accelerator pedal.
5. Shift the selector lever to N position and let the engine idle for **1 minute** or more to cool the ATF.
6. Perform stall tests of D, M (1GR, 2GR) ranges in the same manner.
7. Turn off the engine.

Engine stall speed

Position/range	Engine stall speed (rpm)
D, M (1GR, 2GR)	2,200—2,800
R	

Evaluation of stall test

Condition		Possible cause
Above specification	Insufficient line pressure, torque converter pressure	• Worn oil pump
		• Oil leaking from oil pump, control valve, and/or transaxle case
		• Pressure regulator valve sticking
		• Converter relief valve sticking
		• Pressure control solenoid malfunction
	In D, M (1GR, 2GR) ranges	• Forward clutch slipping
	In M (2GR) range	• 2-4 brake band slipping
	In M (1GR) range and R position	• Low and reverse brake slipping
	In R position	• Low and reverse brake slipping • Reverse clutch slipping • Perform road test to determine whether problem is in low and reverse brake or reverse clutch • Engine braking felt in M (1GR) range: Reverse clutch is defective. • Engine braking not felt in M (1GR) range: Low and reverse brake is defective.
Below specification		• Engine lack of power

Time Lag Test

1. Perform mechanical system test preparation. (See 05–17A–4 Mechanical System Test Preparation.)
2. Start the engine and warm up the engine until the ATF temperature reaches **60—70 °C {141— 158 °F}**. Shift the selector lever from N position to D range.
3. Use a stopwatch to measure the time it takes from shifting until engagement is felt. Take 3 measurements for each test and average the results using the following formula.

Formula

$$\text{Average time lag} = \frac{\text{Time 1} + \text{Time 2} + \text{Time 3}}{3}$$

X3U517WD8

5. Perform the test for the following shifts in the same manner.
   - N position→R position

Average time lag
N position→D range: 0.4—0.7 sec.
N position→R position: 0.4—0.7 sec.

Evaluation of time lag test

Condition		Possible cause
N→D shift	More than specification	• Low line pressure • Forward clutch slipping • Oil leaking from forward clutch fluid circuit • Shift solenoid A not operating properly
	Less than specification	• Forward accumulator not operating properly • Shift solenoid A not operating properly • Excessive line pressure
N→R shift	More than specification	• Low line pressure • Low and reverse brake slipping • Reverse clutch slipping • Shift solenoid B not operating properly
	Less than specification	• Servo apply accumulator not operating properly • Shift solenoid B not operating properly • Excessive line pressure

ROAD TEST [FS5A-EL]

E6U051700000W13

Road Test Preparation

1. Inspect the engine coolant. (See 01–12A–3 COOLING SYSTEM SERVICE WARNINGS [L3, AJ].) (See 01–12A–3 ENGINE COOLANT LEVEL INSPECTION [L3, AJ].)
2. Inspect the engine oil level. (See 01–11A–3 ENGINE OIL LEVEL INSPECTION [L3, AJ].)
3. Inspect the ATF level. (See 05–17A–11 Automatic Transaxle Fluid (ATF) Level Inspection.)
4. Inspect the idle speed. (See 01–10A–30 Idle Speed Inspection.)
5. Inspect the ignition timing. (See 01–10A–29 Ignition Timing Inspection.)
6. Bring up the engine and transaxle to normal operating temperature.

Shift Diagram
D range (normal mode)

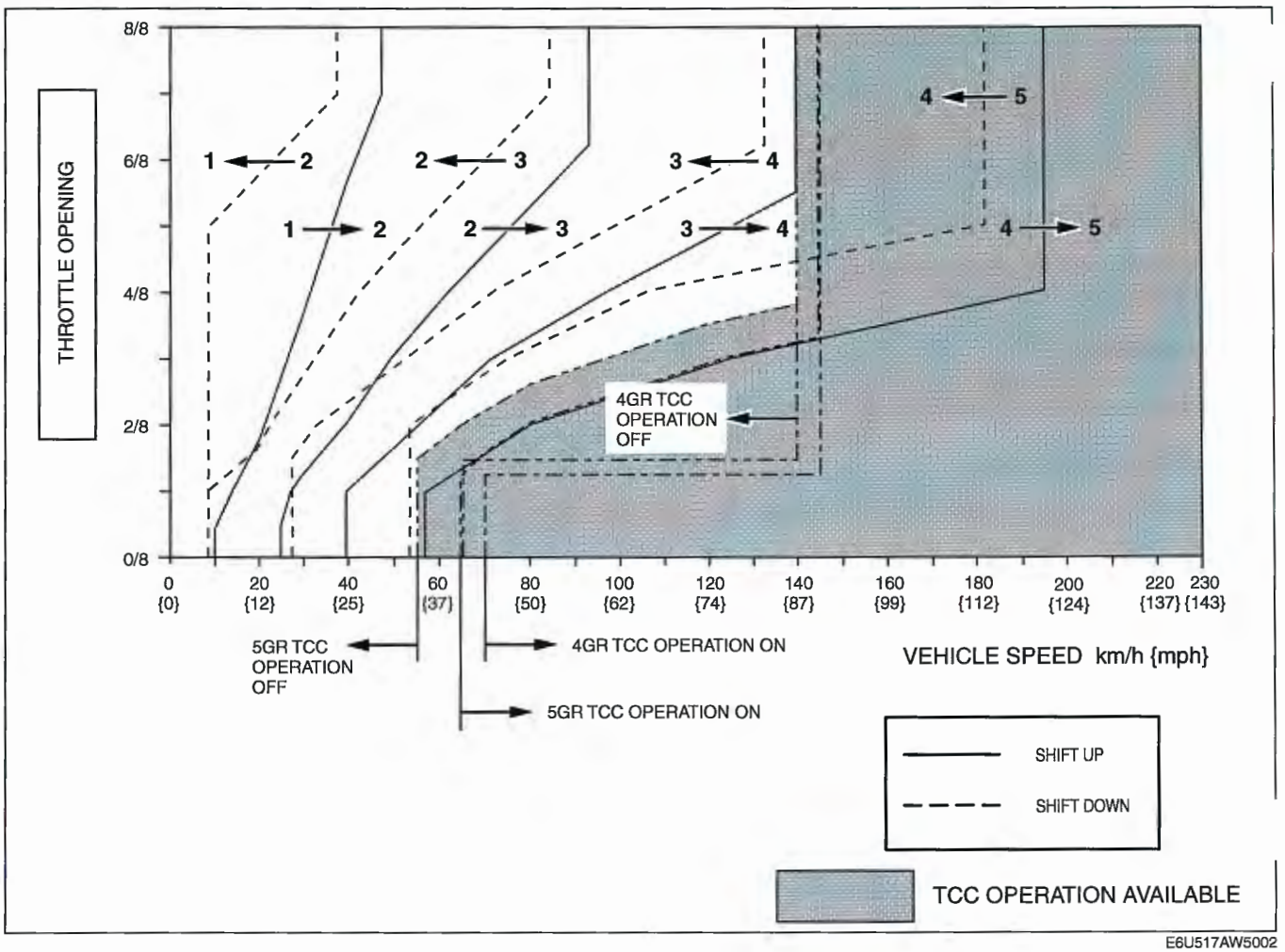

E6U517AW5002

D Range Test

1. Perform road test preparation. (See 05–17A–7 Road Test Preparation.)
2. Shift the selector lever to D range.
3. Accelerate the vehicle at half and wide open.
4. Verify that 1→2, 2→3, 3→4 and 4→5 upshifts and downshifts are obtained. The shift points must be as shown in the table below.
   - If there is any malfunction, inspect the TCM and ATX. (See 05–17A–33 TCM INSPECTION [FS5A-EL].) (See ATX Workshop Manual.)
5. Drive the vehicle in 5GR, 4GR, 3GR, and 2GR and verify that kickdown occurs for 5→4, 4→3, 3→2, 2→1 downshifts, and that the shift points are as shown in the table below.
   - If there is any malfunction, inspect the TCM and ATX. (See 05–17A–33 TCM INSPECTION [FS5A-EL].) (See ATX Workshop Manual.)
6. Decelerate the vehicle and verify that engine braking effect is felt in 2GR, 3GR, 4GR and 5GR.
   - If there is any malfunction, inspect the TCM and ATX. (See 05–17A–33 TCM INSPECTION [FS5A-EL].) (See ATX Workshop Manual.)
7. Drive the vehicle and verify that TCC operation is obtained. The operation points must be as shown in the table below.
   - If there is any malfunction, inspect the TCM and ATX. (See 05–17A–33 TCM INSPECTION [FS5A-EL].) (See ATX Workshop Manual.)

Vehicle speed at shift point table

Range	Mode	Throttle condition	Shift	Vehicle speed (km/h {mph})	Turbine speed (rpm)
D	NORMAL	Wide open throttle	$D_1 \rightarrow D_2$	46—51 {29—31}	5,550—6,200
			$D_2 \rightarrow D_3$	92—99 {58—61}	5,850—6,300
			$D_3 \rightarrow D_4$	137—147 {85—91}	5,850—6,200
			TCC ON (D_4)	142—151 {89—93}	4,400—4,650
			$D_4 \rightarrow D_5$	192—202 {120—125}	5,950—6,200
			TCC ON (D_5)	142—151 {89—93}	3,250—3,450
		Half throttle	$D_1 \rightarrow D_2$	35—48 {22—29}	4,150—5,750
			$D_2 \rightarrow D_3$	55—72 {35—44}	3,450—4,600
			$D_3 \rightarrow D_4$	83—114 {52—70}	3,500—4,800
			TCC ON (D_4)	136—153 {85—94}	4,200—4,700
			$D_4 \rightarrow D_5$	143—177 {89—109}	4,400—5,450
			TCC ON (D_5)	124—146 {77—90}	2,850—3,300
		Closed throttle position	$D_5 \rightarrow D_4$	50—56 {31—34}	1150—1250
			$D_4 \rightarrow D_3$	25—31 {16—19}	800—950
			$D_3 \rightarrow D_2$	5—11 {4—6}	250—450
			$D_2 \rightarrow D_1$	5—11 {4—6}	350—650
			$D_3 \rightarrow D_1$	5—11 {4—6}	250—450
		Kickdown	$D_5 \rightarrow D_4$	177—187 {110—115}	4,050—4,250
			$D_4 \rightarrow D_3$	129—138 {80—85}	3,950—4,200
			$D_3 \rightarrow D_2$	80—88 {50—54}	3,400—3,700
			$D_2 \rightarrow D_1$	35—40 {22—24}	2,250—2,550
	POWER	Wide open throttle	$D_1 \rightarrow D_2$	46—52 {29—32}	5,550—6,200
			$D_2 \rightarrow D_3$	92—99 {58—61}	5,850—6,300
			$D_3 \rightarrow D_4$	137—147 {85—91}	5,850—6,200
		Half throttle	$D_1 \rightarrow D_2$	29—36 {18—22}	3,400—4,350
			$D_2 \rightarrow D_3$	61—80 {38—49}	3,900—5,050
			$D_3 \rightarrow D_4$	89—119 {56—73}	3,800—5,000
		Closed throttle position	$D_4 \rightarrow D_3$	25—31 {16—19}	800—950
			$D_3 \rightarrow D_2$	5—11 {4—6}	250—450
			$D_2 \rightarrow D_1$	5—11 {4—6}	350—650
			$D_3 \rightarrow D_1$	5—11 {4—6}	250—450
		Kickdown	$D_4 \rightarrow D_3$	129—138 {80—85}	3,950—4,200
			$D_3 \rightarrow D_2$	80—88 {50—54}	3,400—3,700
			$D_2 \rightarrow D_1$	35—40 {22—24}	2,250—2,550

M Range Test

1. Perform road test preparation. (See 05–17A–7 Road Test Preparation.)
2. Shift the selector lever to M range.
3. Verify that 1→2, 2→3, 3→4 and 4→5 upshifts and 5→4, 4→3, 3→2, and 2→1 downshifts are obtained by manual shifting of the selector lever forward and back.
   - If there is any malfunction, inspect the TCM and ATX. (See 05–17A–33 TCM INSPECTION [FS5A-EL].) (See ATX Workshop Manual.)
4. Decelerate the vehicle and verify that 5→4, 4→3 3→2, 2→1 and 3→1 downshifts are obtained. The shift points must be as shown in the table below.
   - If there is any malfunction, inspect the TCM and ATX. (See 05–17A–33 TCM INSPECTION [FS5A-EL].) (See ATX Workshop Manual.)
5. Decelerate the vehicle and verify that engine braking effect is felt in all gears.
   - If there is any malfunction, inspect the TCM and ATX. (See 05–17A–33 TCM INSPECTION [FS5A-EL].) (See ATX Workshop Manual.)
6. Drive the vehicle and verify that TCC operation is obtained in 4GR and 5GR. The operation points must be as shown in the table below.
   - If there is any malfunction, inspect the TCM and ATX. (See 05–17A–33 TCM INSPECTION [FS5A-EL].) (See ATX Workshop Manual.)

Vehicle speed at shift point table

Range	Mode	Throttle condition	Shift	Vehicle speed km/h {mph}	Turbine speed (rpm)
M	Manual	Half throttle	TCC ON (M_4)	136—153 {85—94}	4,200—4,700
			TCC ON (M_5)	128—142 {80—88}	2,950—3,200
		All round	M_5→M_4	27—33 {17—20}	650—750
			M_4→M_3	27—33 {17—20}	850—1000
			M_3→M_2	7—13 {5—8}	300—550
			M_2→M_1	7—13 {5—8}	450—800
			M_3→M_1	7—13 {5—8}	300—550

P Position Test

1. Shift into P position on a gentle slope. Release the brake and verify that the vehicle does not roll.
   - If the vehicle rolls, inspect the ATX. (See ATX Workshop Manual.)

AUTOMATIC TRANSAXLE FLUID (ATF) INSPECTION [FS5A-EL]

E6U051719001W03

Automatic Transaxle Fluid (ATF) Condition Inspection

1. One way of determining whether the transaxle should be disassembled is by noting:
   - If the ATF is muddy or varnished.
   - If the ATF smells strange or unusual.

ATF Condition

Condition			Possible cause
Clear red		Normal	—
Light red: pink		Contaminated with water	• Broken oil cooler inside of radiator • Poor filler tube installation: Problem could be occurring to parts inside the transaxle by water contamination. It is necessary to overhaul transaxle and detect defected parts. If necessary, exchange transaxle.
Reddish brown	Has burnt smell and metal specks are found	Deteriorated ATF	Defect powertrain components inside of transaxle: Specks cause wide range of problems by plugging up in oil pipe, control valve body and oil cooler in radiator. • When large amount of metal specks are found, overhaul transaxle and detect defected parts. If necessary, exchange transaxle. • Implement flushing operation as there is a possibility to have specks plugging up oil pipe and/or oil cooler inside of radiator.
	Has no burnt smell	Normal	• Discoloration by oxidation

Automatic Transaxle Fluid (ATF) Level Inspection

Caution
- **If there is no ATF adhering to the dipstick after warming up the engine, there is insufficient ATF. Therefore do not drive the vehicle as it could damage the ATX.**
- **If a final inspection of the ATF level is performed without driving the vehicle, or the ATF amount is inspected while the ATF temperature is not at about 60—70 °C {140—158 °F}, the ATX could be damaged because the ATF level inspection would be incorrect.**
- **If too much ATF is added, the ATF temperature will increase and oil could leak from the breather hose.**

Note
- The dipstick of the FS5A-EL type measures the ATF level on the differential side and, under the condition that the ATF temperature on the differential side does not rise even after warming up the engine, ATF adhering to the end of the dipstick is normal.

1. Park the vehicle on level ground.
2. Apply the parking brake and position wheel chocks securely to prevent the vehicle from rolling.
3. Verify visually that there is no ATF leakage from the oil hose or housing.

Caution
- **If the oil level decreases dramatically while warming up the engine, do not shift the selector lever as it could damage the ATX.**

4. Start the engine and warm it up in the P position.
5. Verify that the ATF level is in the range while the engine is idling.

ATF adherence range
A: Within 5 mm {0.197 in}

- If necessary, add ATF to the specification.

ATF type
ATF M-V

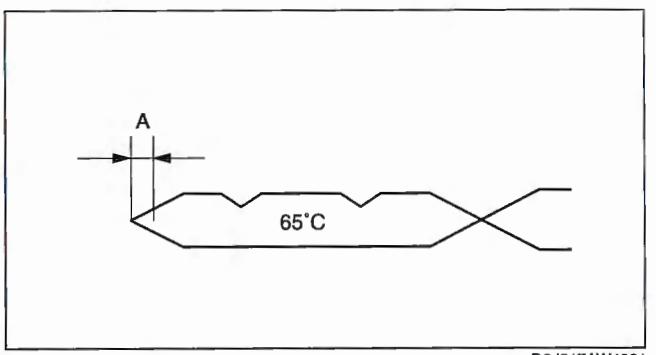

D6J517AW4001

6. Shift the selector lever and pause momentarily in each range (P—M) while depressing the brake pedal.
7. Shift the selector lever to P position.
8. Drive on city roads at a minimum of 5 km.
9. Adjust the length or thermometer probe so that the length is the same as the depth gauge, and hold the probe with a paper holder. Insert into the filler tube and measure the temperature.
10. Warm up the engine until the ATF reaches **60—70 °C {140—158 °F}**.

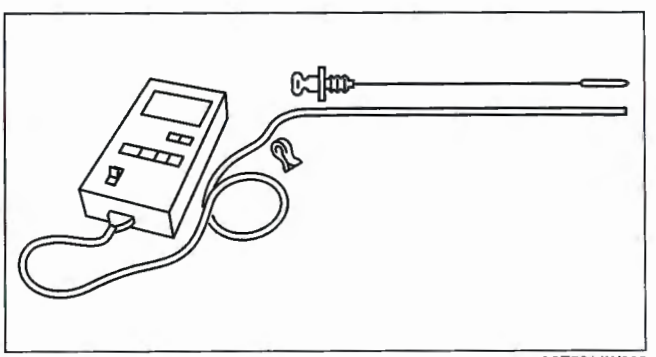
A6E5614W003

11. Verify that the ATF level is in the range while the engine is idling.
    - If necessary, add ATF to the specification.

ATF type
ATF M-V

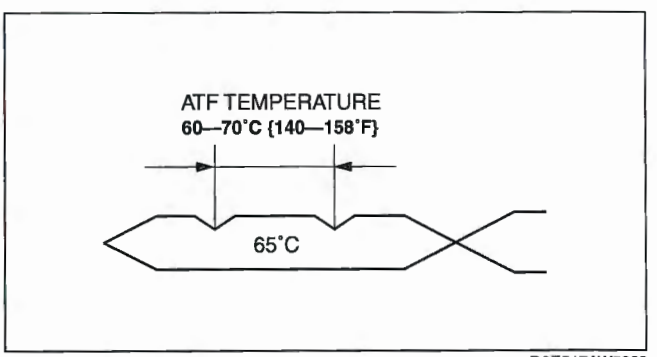

D6E517AW5003

AUTOMATIC TRANSAXLE FLUID (ATF) REPLACEMENT [FS5A-EL]

E6U051719001W04

Warning
- **When the transaxle and ATF are hot, they can badly burn you. Turn off the engine and wait until they are cool before changing the ATF.**

1. Remove the oil dipstick.
2. Remove the oil drain plug and washer.
3. Drain the ATF into a container.
4. Install a new washer and drain plug.

Tightening torque
29.4—41.2 N·m {3.0—4.2 kgf·m, 22—30 ft·lbf}

5. Add the specified ATF until ATF level reaches lower notch of dipstick type of ATF through the oil filler tube.

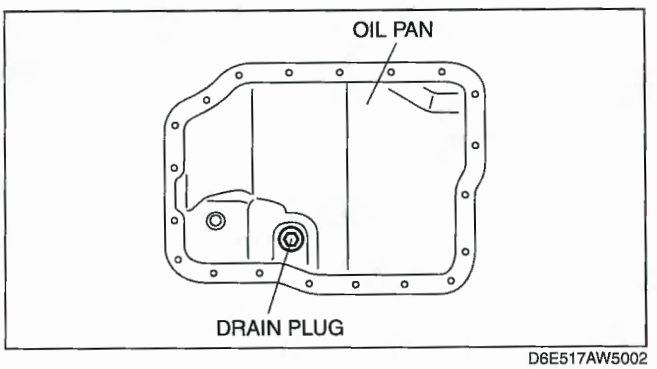

D6E517AW5002

ATF type
ATF M-V

Capacity (approx. quantity)
Draining ATF from drain plug: 3.0 L {3.2 US qt, 2.4 Imp qt}
Overhauling ATX: 5.0 L {5.3 US qt, 4.4 Imp qt}

6. Adjust the ATF amount to within the specified range according to the ATF inspection procedure. (See 05–17A–10 AUTOMATIC TRANSAXLE FLUID (ATF) INSPECTION [FS5A-EL].)

Note
- The full amount of ATF for the ATX is as follows

Capacity (approx. quantity)
8.14 L {8.6 US qt, 7.2 Imp qt}

TRANSAXLE RANGE (TR) SWITCH INSPECTION [FS5A-EL]

E6U051719200W07

Operating Inspection
1. Verify that the starter operates only when the ignition switch is at the START position with the selector lever in P or N position.
   - If not as specified, adjust the TR switch.
2. Verify that the back-up lights illuminate when shifted to R position with the ignition switch at the ON position.
   - If not as specified, adjust the TR switch.

Continuity Inspection

Caution
- **Water or foreign objects entering the connector can cause a poor connection or corrosion. Be sure not to drop water or foreign objects on the connector when disconnecting it.**

1. Disconnect the negative battery cable.
2. Remove the air cleaner component. (See 01–13A–4 INTAKE AIR SYSTEM REMOVAL/INSTALLATION [L3].)
3. Disconnect the TR switch connector.

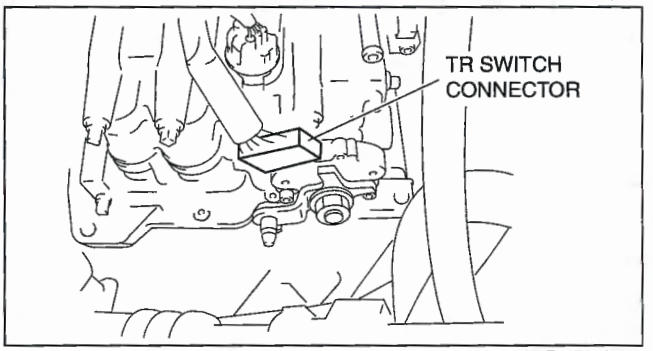

D6E517AW5004

4. Inspect for continuity at the TR switch.
   - If not as specified, adjust the TR switch and go to Step 4.

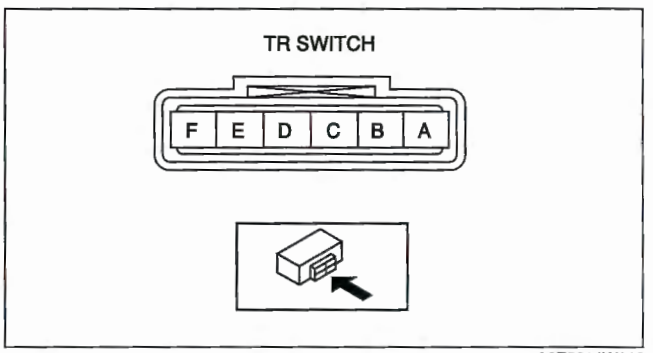

A6E5614W010

○—○ : Continuity

Position/Range	Connector terminal			
	A	F	D	E
P	○—○			
R			○—○	
N	○—○			
D				

B3E0517W006

Transaxle range (TR) switch

Terminal	Position/Range	Resistance (ohm)
B—C	P	4,085—4,515
	R	1,425—1,575
	N	713—788
	D	132—390

5. Reinspect for continuity at TR switch.
   - If not as specified, replace the TR switch.
6. Connect the TR switch connector.
7. Install the air cleaner component. (See 01–13A–4 INTAKE AIR SYSTEM REMOVAL/INSTALLATION [L3].)
8. Connect the negative battery cable.

TRANSAXLE RANGE (TR) SWITCH REMOVAL/INSTALLATION [FS5A-EL]

E6U051719200W08

1. Disconnect the negative battery cable.
2. Remove the air cleaner component. (See 01–13A–4 INTAKE AIR SYSTEM REMOVAL/INSTALLATION [L3].)

Caution
- **Water or foreign objects entering the connector can cause a poor connection or corrosion. Be sure not to drop water or foreign objects on the connector when disconnecting it.**

3. Disconnect the TR switch connector.
4. Remove the clip and disconnect the selector cable.

Caution
- **Do not use an impact wrench. Hold the manual shaft lever when removing the manual shaft nut, or the transaxle may be damaged.**

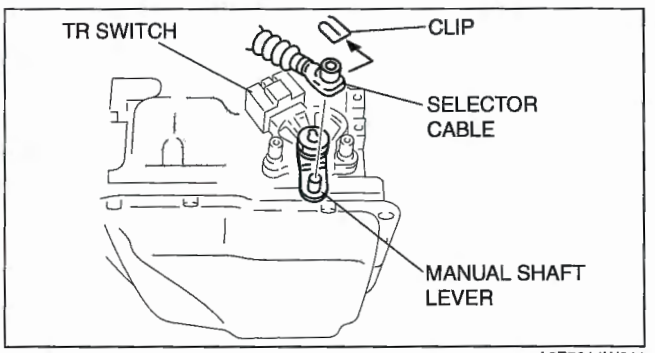

A6E5614W011

5. Set the adjustable wrench as shown to hold the manual shaft lever.
6. Remove the manual shaft nut and washer.

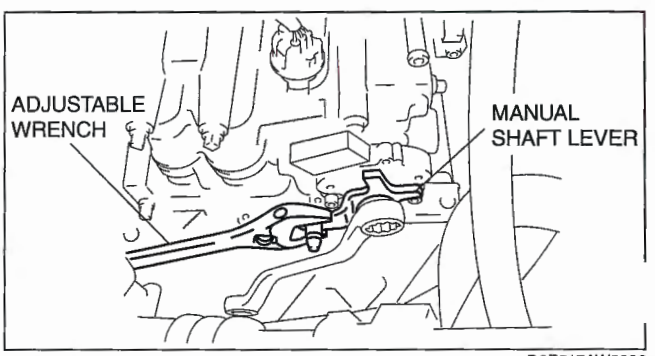

D6E517AW5006

7. Remove the manual shaft lever.
8. Remove the TR switch.

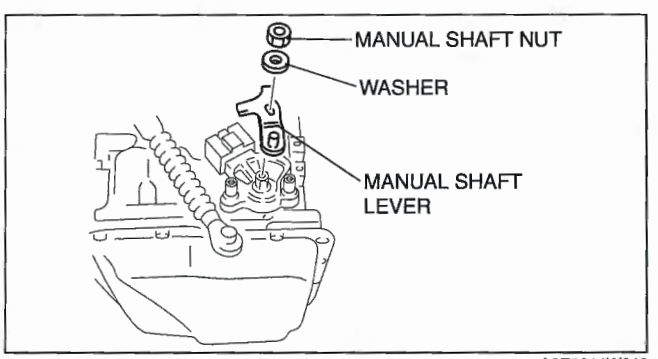

A6E5614W012

9. Rotate the manual shaft to the converter housing side fully, then return 2 notches to set the N position.

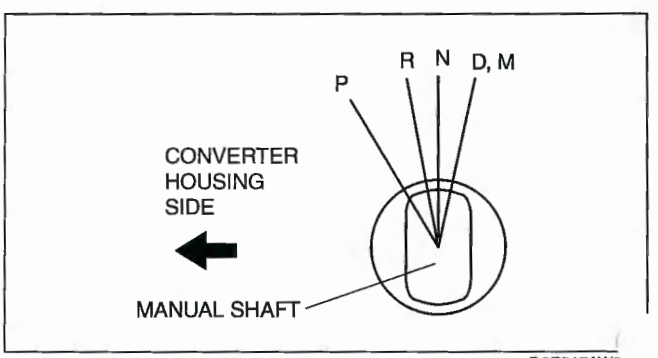

D6E517AW5

10. Turn the protrusion at resistance between the terminals B and C become 750 ohms.

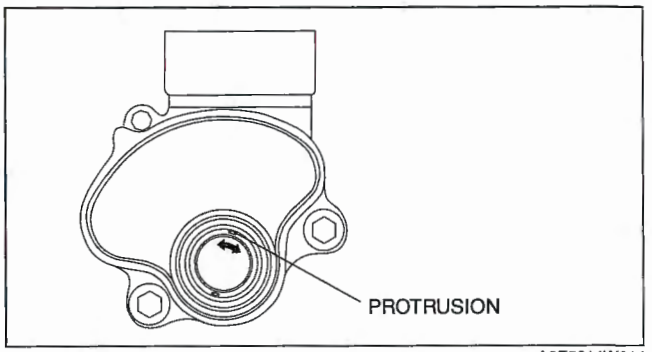

A6E5614W014

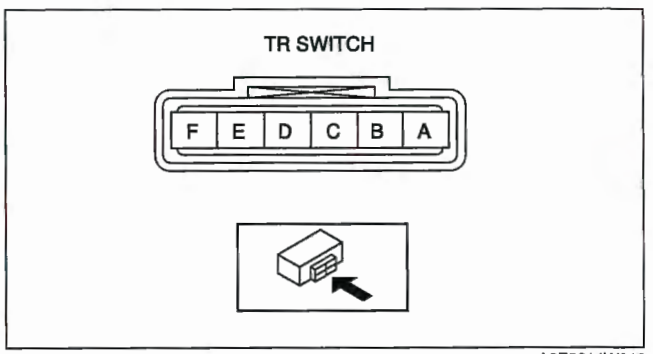

A6E5614W010

11. Install the TR switch while aligning the protrusion and groove as shown.
12. Hand-tighten the TR switch mounting bolts.

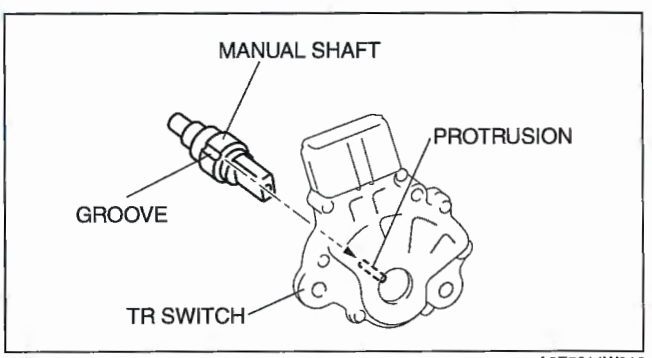

A6E5614W016

13. Inspect the resistance between the terminals B and C.
    - If not as specified, readjust the TR switch. (See 05–17A–17 TRANSAXLE RANGE (TR) SWITCH ADJUSTMENT [FS5A-EL].)

    Resistance
    750 ohms

14. Tighten the TR switch mounting bolts.

    Tightening torque
    8—11 N·m {82—112 kgf·cm, 71—97 in·lbf}

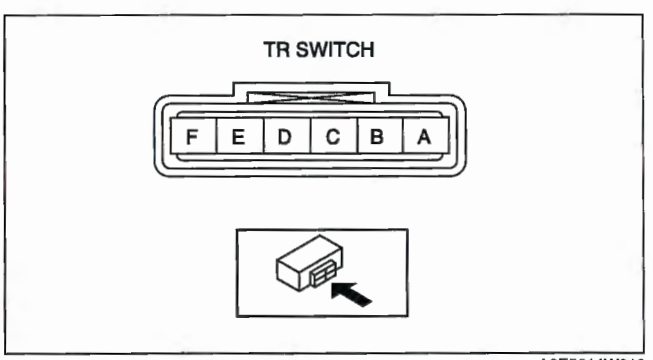

A6E5614W010

Caution
- **Do not use an impact wrench. Hold the manual shaft lever when removing the manual shaft nut, or the transaxle may be damaged.**

15. Install the manual shaft lever and the washer.

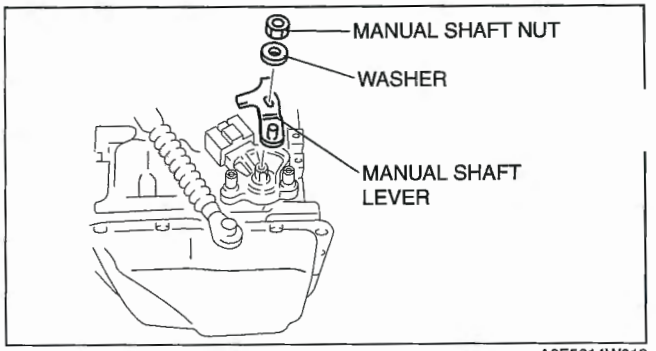

A6E5614W012

16. Set the adjustable wrench as shown to hold the manual shaft lever, and tighten the manual shaft nut.

    Tightening torque
    32—46 N·m {3.2—4.7 kgf·m, 24—33 ft·lbf}

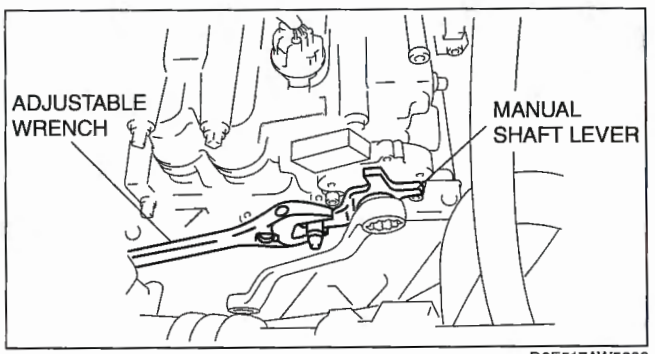

D6E517AW5006

17. Install the clip to the selector cable as shown in the figure.
18. Shift the selector lever to P position.
19. Turn the manual shaft lever to P position.

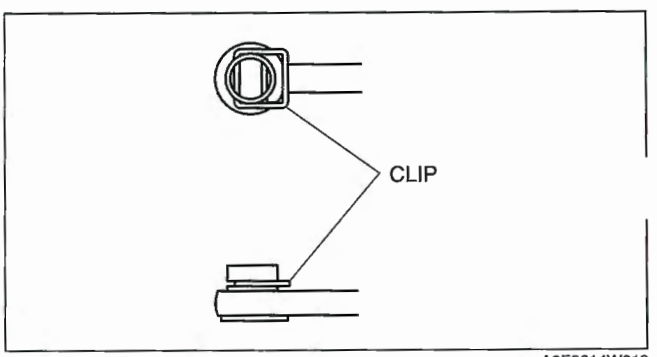

A6E5614W018

20. Connect the selector cable.
21. Inspect for continuity at the TR switch. (See 05–17A–12 TRANSAXLE RANGE (TR) SWITCH INSPECTION [FS5A-EL].) (See 05–17A–12 TRANSAXLE RANGE (TR) SWITCH INSPECTION [FS5A-EL].)
    - If not as specified, readjust the TR switch. (See 05–17A–17 TRANSAXLE RANGE (TR) SWITCH ADJUSTMENT [FS5A-EL].)
22. Connect the TR switch connector.
23. Install the air cleaner component. (See 01–13A–4 INTAKE AIR SYSTEM REMOVAL/INSTALLATION [L3].)

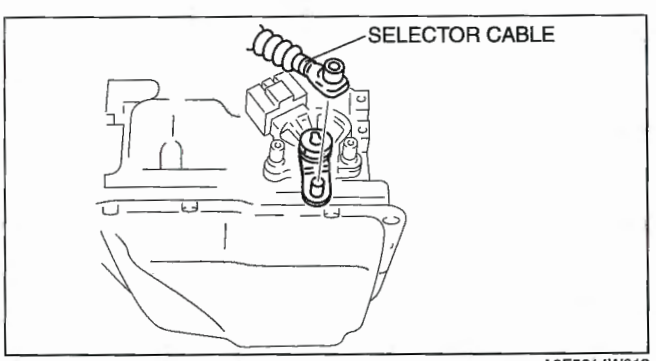

A6E5614W019

24. Connect the negative battery cable.
25. Inspect operation of the TR switch. (See 05–17A–12 TRANSAXLE RANGE (TR) SWITCH INSPECTION [FS5A-EL].) (See 05–17A–12 TRANSAXLE RANGE (TR) SWITCH INSPECTION [FS5A-EL].)
    - If not as specified, readjust the TR switch. (See 05–17A–17 TRANSAXLE RANGE (TR) SWITCH ADJUSTMENT [FS5A-EL].)

TRANSAXLE RANGE (TR) SWITCH ADJUSTMENT [FS5A-EL]

E6U051719200W09

1. Disconnect the negative battery cable.
2. Remove the air cleaner component. (See 01–13A–4 INTAKE AIR SYSTEM REMOVAL/INSTALLATION [L3].)

Caution

- **Water or foreign objects entering the connector can cause a poor connection or corrosion. Be sure not to drop water or foreign objects on the connector when disconnecting it.**

3. Remove the clip and disconnect the selector cable.

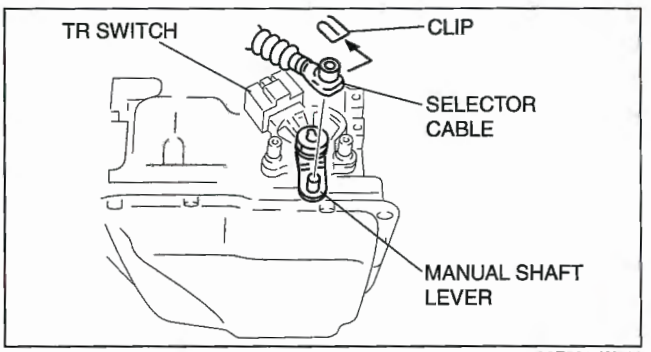

A6E5614W011

4. Rotate the manual shaft to the converter housing side fully, then return 2 notches to set the N position.

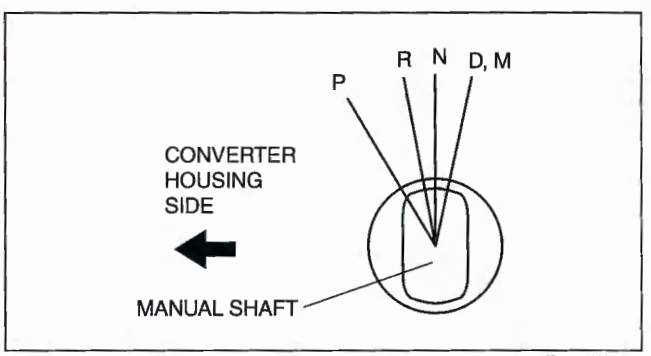

D6E517AW5007

5. Disconnect the TR switch connector.

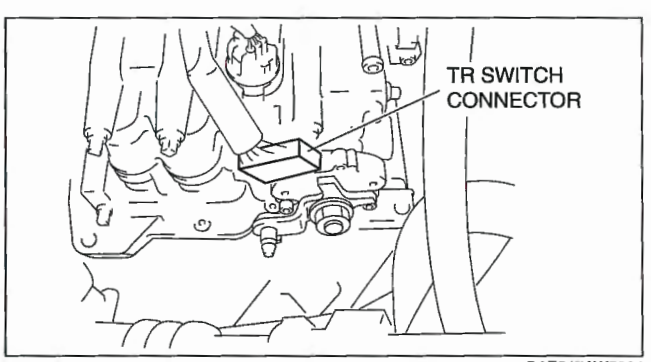

D6E517AW5004

6. Loosen the TR switch mounting bolts.

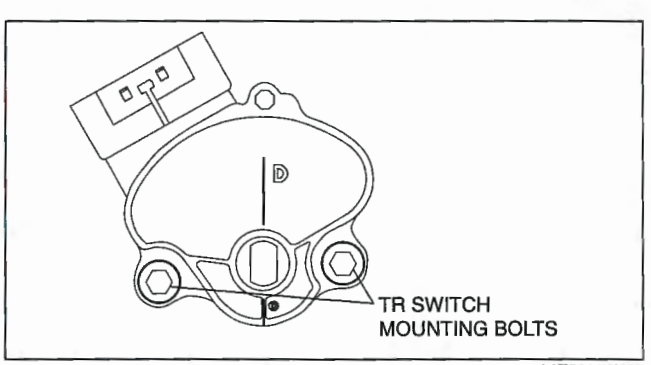

A6E5614W020

7. Measure the resistance between the terminals B and C.
8. Adjust the switch to the point as follow.

Resistance standard value
750 ohms

9. Tighten the TR switch mounting bolts.

Tightening torque
8—11 N·m {82—112 kgf·cm, 71—97 in·lbf}

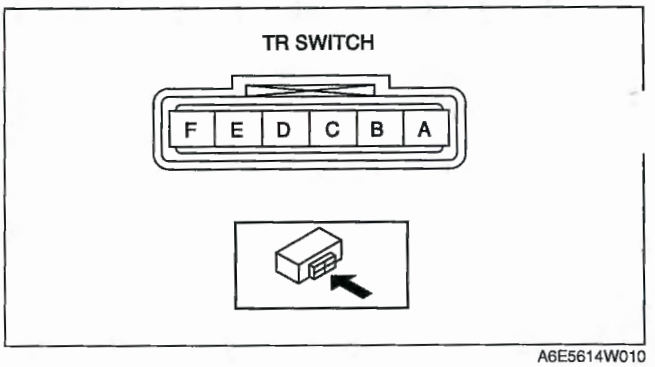

A6E5614W010

10. Move the selector lever to N position.
11. Verify that the TR switch is aligned with N position.
12. Connect the TR switch connector.
13. Install the clip to the selector cable as shown in the figure.

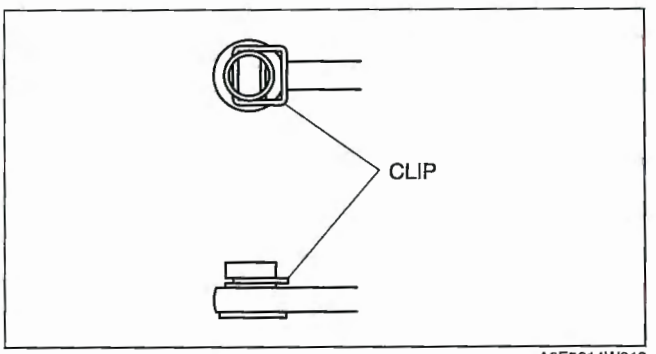

A6E5614W018

14. Connect the selector cable to the manual shaft lever as shown in the figure.
15. Inspect operation of the TR switch. (See 05–17A–12 TRANSAXLE RANGE (TR) SWITCH INSPECTION [FS5A-EL].) (See 05–17A–12 TRANSAXLE RANGE (TR) SWITCH INSPECTION [FS5A-EL].)
    - If not as specified, readjust the TR switch.
16. Install the air cleaner component. (See 01–13A–4 INTAKE AIR SYSTEM REMOVAL/INSTALLATION [L3].)
17. Connect the negative battery cable.

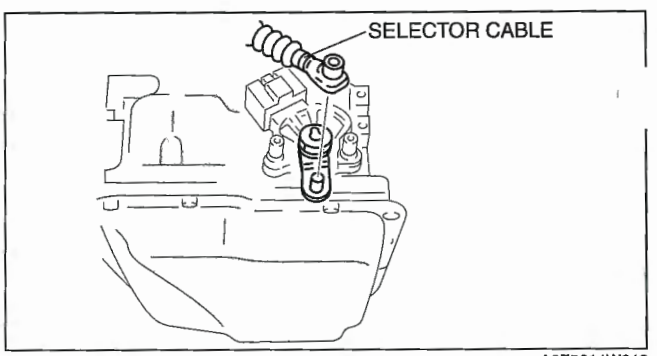

A6E5614W019

TRANSAXLE FLUID TEMPERATURE (TFT) SENSOR INSPECTION [FS5A-EL]

E6U051719200W10

On-Vehicle Inspection

1. Disconnect the negative battery cable.
2. Remove the air cleaner component. (See 01–13A–4 INTAKE AIR SYSTEM REMOVAL/INSTALLATION [L3].)

Caution
- **Water or foreign objects entering the connector can cause a poor connection or corrosion. Be sure not to drop water or foreign objects on the connector when disconnecting it.**

3. Disconnect the transaxle connector (primary).

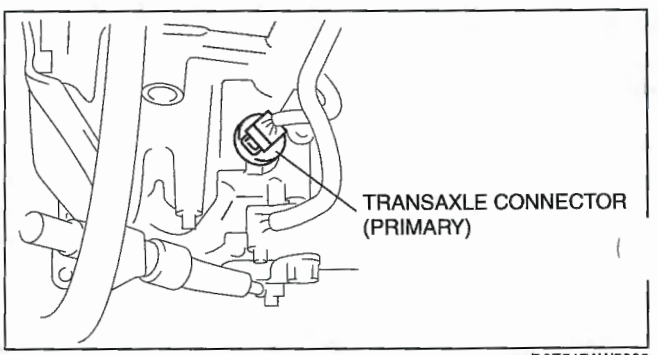

D6E517AW5008

4. Measure the resistance between the terminals E and H.
   - If it is out of specification, perform the off-vehicle inspection of TFT sensor. (See 05–17A–20 TRANSAXLE FLUID TEMPERATURE (TFT) SENSOR REMOVAL/INSTALLATION [FS5A-EL].)

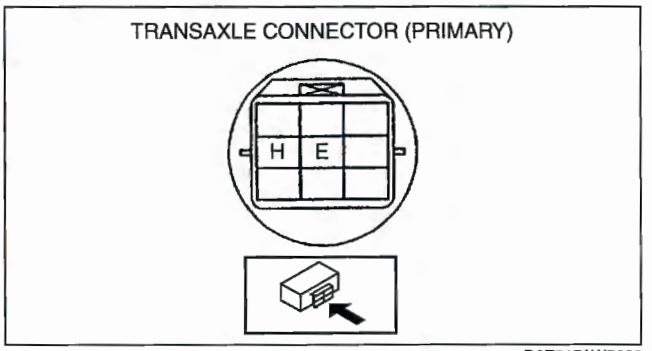

D6E517AW5009

Transaxle fluid temperature (TFT) sensor

ATF temperature (°C {°F})	Resistance (kilohm)
–20 {–4}	236—324
0 {32}	84.3—110
20 {68}	33.5—42.0
40 {104}	14.7—17.9
60 {140}	7.08—8.17
80 {176}	3.61—4.15
100 {212}	1.96—2.24
120 {248}	1.13—1.28
130 {266}	0.87—0.98

5. Install the air cleaner component. (See 01–13A–4 INTAKE AIR SYSTEM REMOVAL/INSTALLATION [L3].)
6. Connect the negative battery cable.

Off-Vehicle Inspection

Warning
- **When the transaxle and ATF are hot, they can badly burn. Turn off the engine and wait until they are cool before replacing ATF.**

1. Disconnect the negative battery cable.
2. Remove the coupler component. (See 05–17A–46 PRIMARY CONTROL VALVE BODY REMOVAL [FS5A-EL].)
3. Place the TFT sensor and a thermometer in ATF as shown, and heat the ATF gradually.

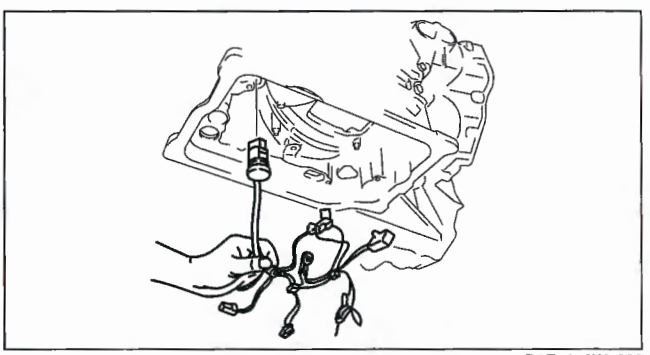
D6E517AW5036

4. Measure resistance between the terminals of the TFT sensor.
   - If not as specified, replace the TFT sensor. (See 05–17A–20 TRANSAXLE FLUID TEMPERATURE (TFT) SENSOR REMOVAL/INSTALLATION [FS5A-EL].)

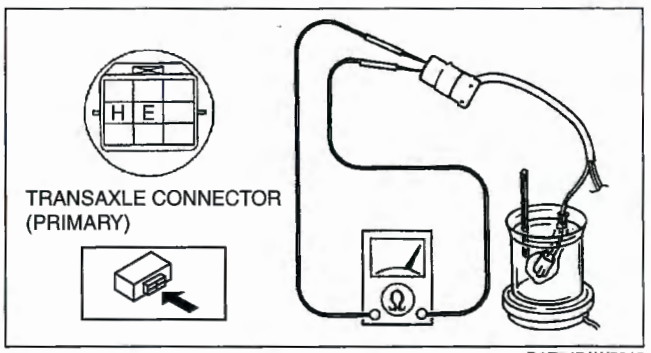

D6E517AW5015

Transaxle fluid temperature (TFT) sensor

ATF temperature (°C {°F})	Resistance (kilohm)
-20 {-4}	236—324
0 {32}	84.3—110
20 {68}	33.5—42.0
40 {104}	14.7—17.9
60 {140}	7.08—8.17
80 {176}	3.61—4.15
100 {212}	1.96—2.24
120 {248}	1.13—1.28
130 {266}	0.87—0.98

TRANSAXLE FLUID TEMPERATURE (TFT) SENSOR REMOVAL/INSTALLATION [FS5A-EL]

E6U051719200W11

Warning

- **When the transaxle and ATF are hot, they can badly burn. Turn off the engine and wait until they are cool before replacing the ATF.**

1. Disconnect the negative battery cable.
2. Remove the under cover.
3. Drain the ATF.
4. Remove the oil pan.
5. Remove the primary control valve body. (See 05–17A–46 PRIMARY CONTROL VALVE BODY REMOVAL [FS5A-EL].)
6. Remove the coupler component.
7. Install the coupler component.
8. Install the primary control valve body. (See 05–17A–46 PRIMARY CONTROL VALVE BODY REMOVAL [FS5A-EL].)
9. Install the oil pan. (See 05–17A–46 PRIMARY CONTROL VALVE BODY REMOVAL [FS5A-EL].)
10. Install the under cover.
11. Connect the negative battery cable.
12. Add ATF. (See 05–17A–12 AUTOMATIC TRANSAXLE FLUID (ATF) REPLACEMENT [FS5A-EL].)
13. Perform the mechanical system test. (See 05–17A–4 MECHANICAL SYSTEM TEST [FS5A-EL].)
14. Perform the road test. (See 05–17A–7 ROAD TEST [FS5A-EL].)

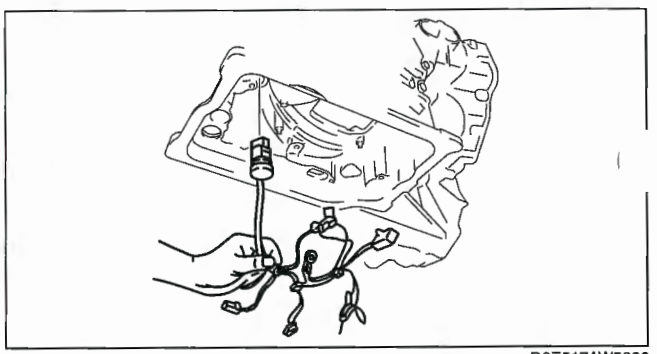

D6E517AW5036

OIL PRESSURE SWITCH INSPECTION [FS5A-EL]

E6U051700000W14

Caution

- **Water or foreign objects entering the connector can cause poor connection or corrosion. Be sure not to drop water or foreign objects on the connector when disconnecting it.**

On-vehicle Inspection (harness inspection)

1. Disconnect the negative battery cable.
2. Remove the under cover.
3. Disconnect the cord assembly connector.

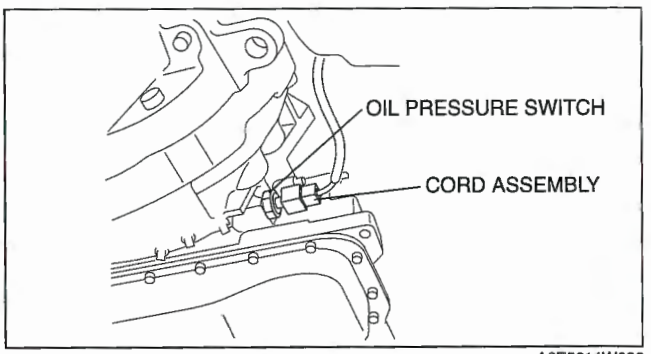

A6E5614W026

4. Verify that there is no continuity between cord assembly terminal and ground.
   - If as continuity, inspect the cord assembly.
   - If the cord assembly is okay, inspect the oil pressure switch. (See 05–17A–21 On-vehicle Inspection (oil pressure switch inspection).)
5. Connect the cord assembly connector.
6. Install the under cover.
7. Connect the negative battery cable.

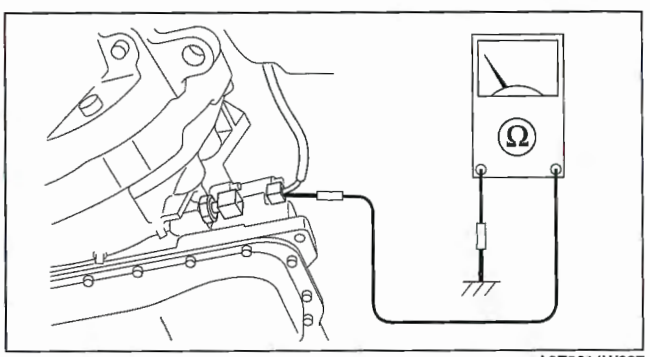

A6E5614W027

On-vehicle Inspection (oil pressure switch inspection)

1. Remove the under cover.
2. Disconnect the cord assembly connector.
3. Start the engine, with gear position in N or P.
4. Reaffirm that there is no continuity between cord assembly terminal and ground.
5. Firmly depress the brake pedal with the left foot.
6. Shift the selector lever to D range.

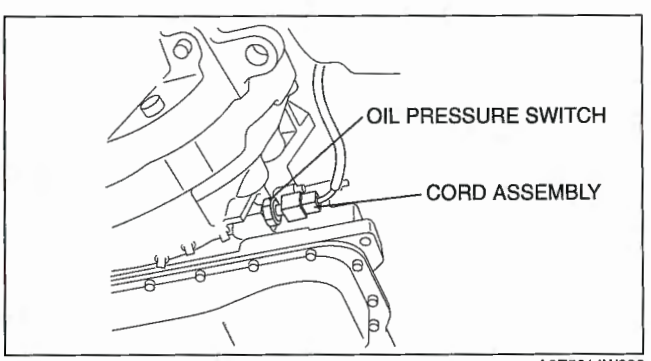

A6E5614W026

7. Verify that there is continuity between oil pressure switch terminal and ground.
   - If not as specified, replace the oil pressure switch. (See 05–17A–22 OIL PRESSURE SWITCH REMOVAL/INSTALLATION [FS5A-EL].)
8. Connect the oil pressure switch connector.
9. Install the under cover.
10. Connect the negative battery cable.

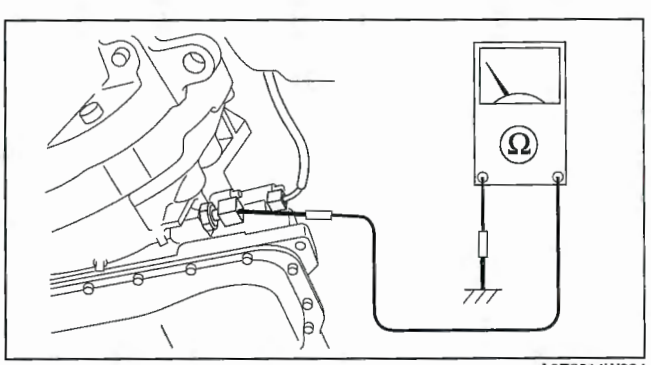

A6E5614W094

Off-vehicle inspection

1. Remove the oil pressure switch.
2. Apply air pressure at **400—440 kPa {4.1—4.4 kgf/cm^2,58—63 psi}**
3. Inspect continuity the between oil pressure switch terminal and screw part.
   - If not as continuity, replace the oil pressure switch. (See 05–17A–22 OIL PRESSURE SWITCH REMOVAL/INSTALLATION [FS5A-EL].)
4. Install the oil pressure switch.

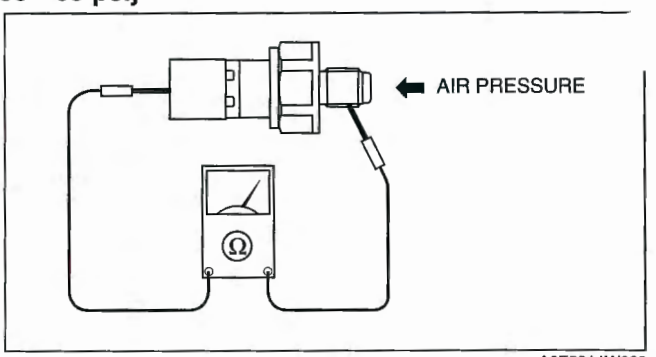

A6E5614W028

OIL PRESSURE SWITCH REMOVAL/INSTALLATION [FS5A-EL]

E6U051700000W15

Warning

- **When the transaxle and ATF are hot, they can badly burn. Turn off the engine and wait until they are cool before replacing ATF.**

1. Disconnect the negative battery cable.
2. Remove the under cover.
3. Disconnect the cord assembly connector.
4. Remove the oil pressure switch.
5. Install the oil pressure switch.

Tightening torque
17.1—22.1N·m {1.75—2.25 kgf·m, 13—16 ft·lbf}

6. Connect the oil pressure switch connector.
7. Install the under cover.
8. Connect the negative battery cable.

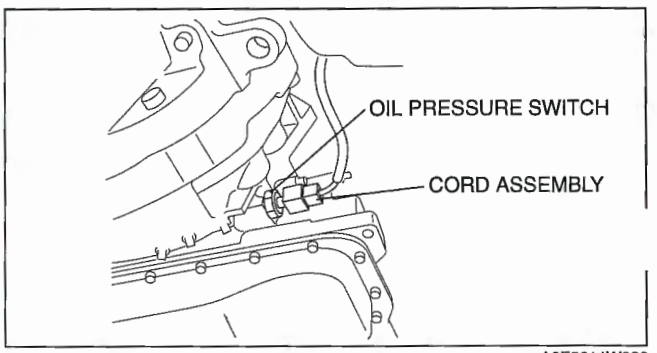

A6E5614W026

INPUT/TURBINE SPEED SENSOR INSPECTION [FS5A-EL]

E6U051719200W12

Caution

- **Water or foreign objects entering the connector can cause a poor connection or corrosion. Be sure not to drop water or foreign objects on the connector when disconnecting it.**

1. Disconnect the negative battery cable.
2. Remove the battery and battery tray.
3. Remove the air cleaner component. (See 01–13A–4 INTAKE AIR SYSTEM REMOVAL/INSTALLATION [L3].)
4. Disconnect the input/turbine speed sensor connector.

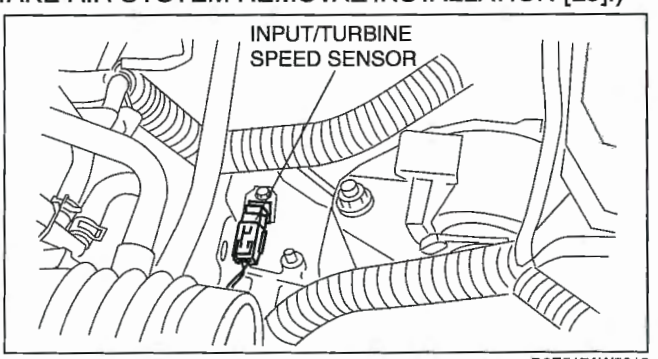

D6E517AW5012

5. Measure resistance between the terminals of the input/turbine speed sensor.
   - If not as specified, replace the input/turbine speed sensor.

   Input/turbine speed sensor resistance
   250—600 ohms (ATF temperature: –40—160 °C {–40—320 °F})

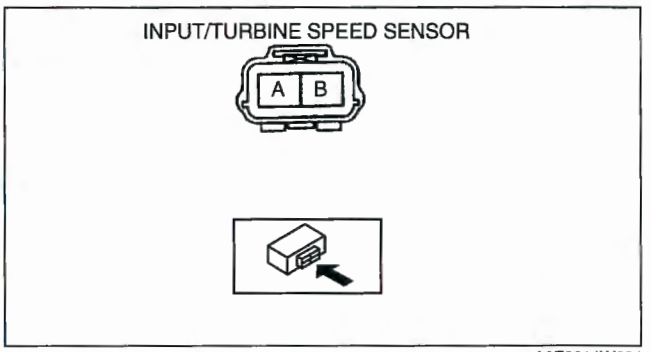

A6E5614W031

6. Connect the input/turbine speed sensor connector.
7. Install the air cleaner component. (See 01–13A–4 INTAKE AIR SYSTEM REMOVAL/INSTALLATION [L3].)
8. Install the battery and battery tray.
9. Connect the negative battery cable.

INPUT/TURBINE SPEED SENSOR REMOVAL/INSTALLATION [FS5A-EL]

E6U051719200W13

1. Disconnect the negative battery cable.
2. Remove the battery and battery tray.
3. Remove the air cleaner component. (See 01–13A–4 INTAKE AIR SYSTEM REMOVAL/INSTALLATION [L3].)
4. Disconnect the input/turbine speed sensor connector.
5. Remove the input/turbine speed sensor.
6. Apply ATF to a new O-ring and install it on a new input/turbine speed sensor.
7. Install the input/turbine speed sensor.

   Tightening torque
   8—11 N·m {82—112 kgf·cm, 71—97 in·lbf}

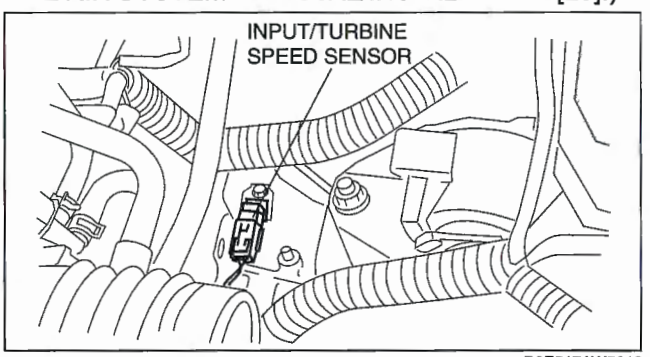

D6E517AW5012

   Connect the input/turbine speed sensor connector.
9. Install the air cleaner component. (See 01–13A–4 INTAKE AIR SYSTEM REMOVAL/INSTALLATION [L3].)
10. Install the battery and battery tray.
11. Connect the negative battery cable.

INTERMEDIATE SENSOR INSPECTION [FS5A-EL]

E6U051719200W14

1. Connect the WDS or equivalent, drive the vehicle, and verify the input value of the ISS PID.
   - If the input value is 0 rpm, perform the "Power Supply Voltage Inspection", "Open Circuit Inspection", or "Short Circuit Inspection".
   - If the input value is other than 0 rpm, perform the "Visual Inspection" or "Wave Profile Inspection".

Visual Inspection

1. Remove the intermediate sensor. (See 05–17A–25 INTERMEDIATE SENSOR REMOVAL/INSTALLATION [FS5A-EL].)
2. Make sure that the sensor is free of any metallic shavings or particles.
   - If any are found on the sensor, clean them off.
3. Install the intermediate sensor. (See 05–17A–25 INTERMEDIATE SENSOR REMOVAL/INSTALLATION [FS5A-EL].)

Wave profile Inspection

1. Remove the TCM. (See 05–17A–38 TCM REMOVAL/INSTALLATION [FS5A-EL].)
2. Connect WDS or equivalent to DLC connector.
3. Connect oscilloscope test leads to the following TCM connector terminals.
   - (+) lead: TCM terminal 2L
   - (-) lead: TCM terminal 1P
4. Start the engine.
5. Monitor VSS PID.
6. Inspect wave profile.
   - TCM terminal: 2L (+) - 1P (-)
   - Oscilloscope setting: 1 V/DIV (Y), 2.5 ms/DIV (X), DC range
   - Vehicle condition: drive the vehicle with 32 km/h{20 mph}
     — If wave profile or voltage are out of specifications, carry out the "Open Circuit Inspection" or "Short Circuit Inspection"

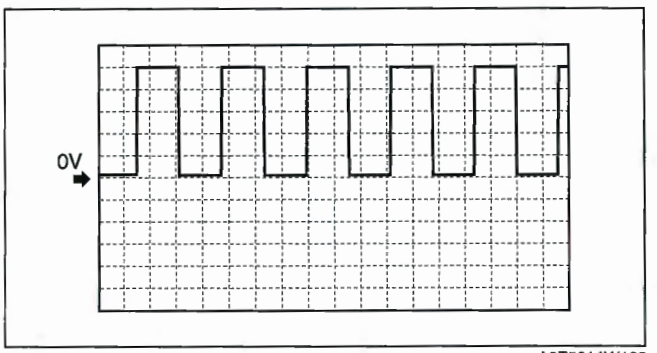

A6E5614W102

Power Supply Voltage Inspection

1. Disconnect the intermediate sensor connector.
2. Turn the ignition switch to ON.
3. Measure voltage at intermediate sensor connector terminal B (wiring harness side).

   Intermediate sensor voltage
   4.5—5.5 V

   - If voltage is okay, go to Open Circuit Inspection and Short Circuit Inspection.
   - If voltage is wrong, repair wiring harness between intermediate sensor and TCM.

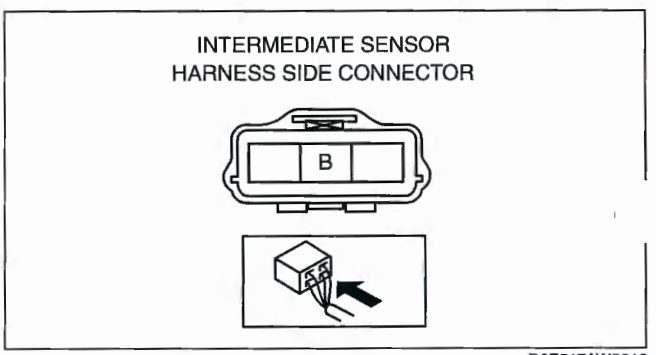

D6E517AW5013

Open Circuit Inspection

1. Inspect the following circuit for open.
   - Power circuit (intermediate sensor connector terminal A to main relay terminal D)
   - Ground circuit (intermediate sensor connector terminal C to GND)
   - If an open circuit or short circuit is found, repair the malfunctioning wiring harness.
   - If there are no open or short circuits, perform the sensor rotor inspection.

Short Circuit Inspection

1. Inspect the following circuit for short.
   - Power circuit (intermediate sensor connector terminal A to main relay terminal D)
   - If an open circuit or short circuit is found, repair the malfunctioning wiring harness.
   - If there are no open or short circuits, perform the sensor rotor inspection.

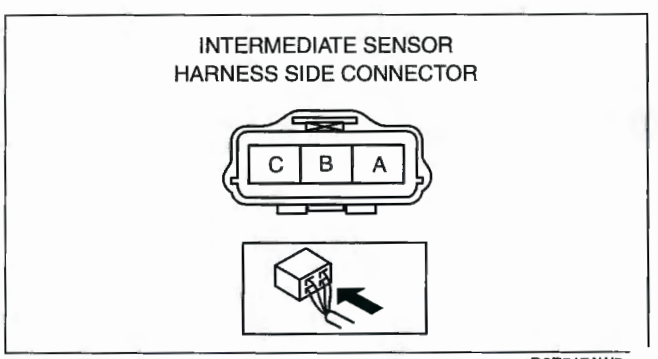

D6E517AWF

Secondary Gear Inspection

1. Remove the intermediate sensor. (See 05–17A–25 INTERMEDIATE SENSOR REMOVAL/INSTALLATION [FS5A-EL].)
   Shift the selector lever to N position.
   Inspect secondary gear surface via intermediate sensor installation hole while rotating the front tire manually.
   (1) Is secondary gear free of damage and cracks?
   (2) Is secondary gear free of any metallic shavings or particles?
   - If secondary gear is okay, replace the intermediate sensor.
   - If there is a problem, clean or replace the secondary gear.

INTERMEDIATE SENSOR REMOVAL/INSTALLATION [FS5A-EL]

E6U051719200W15

Caution

- **Water or foreign objects entering the connector can cause a poor connection or corrosion. Be sure not to drop water or foreign objects on the connector when disconnecting it.**
- **If foreign materials are stuck to the intermediate sensor, disturbance by magnetic flux can cause sensor output to be abnormal and thereby negatively affect control. Make sure that foreign materials such as iron filings are not stuck to the intermediate sensor during installation.**

1. Disconnect the negative battery cable.
2. Remove the battery and battery tray.
3. Disconnect the intermediate sensor connector.
4. Remove the intermediate sensor.
5. Apply ATF to a new O-ring and install it on a new intermediate sensor.

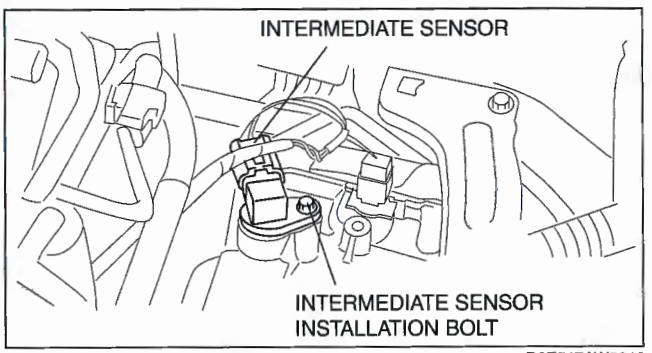

D6E517AW5016

6. Install the intermediate sensor.

   Tightening torque
   8—11 N·m {82—112 kgf·cm, 71—97 in·lbf}

7. Connect the intermediate sensor connector.
8. Install the battery and battery tray.
9. Connect the negative battery cable.

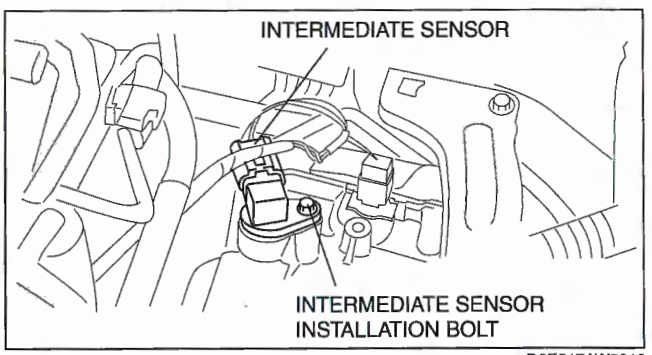

D6E517AW5016

VEHICLE SPEED SENSOR (VSS) INSPECTION [FS5A-EL]

E6U051719200W16

1. Connect the WDS or equivalent, drive the vehicle, and verify the input value of the OSS PID.
   - If the input value is 0 rpm, perform the "Power Supply Voltage Inspection", "Open Circuit Inspection", or "Short Circuit Inspection".
   - If the input value is other than 0 rpm, perform the "Visual Inspection" or "Wave Profile Inspection".

Visual Inspection

1. Remove the VSS. (See 05–17A–27 VEHICLE SPEED SENSOR (VSS) REMOVAL/INSTALLATION [FS5A-EL].)
2. Make sure that the sensor is free of any metallic shavings or particles.
   - If any are found on the sensor, clean them off.

   Install the VSS. (See 05–17A–27 VEHICLE SPEED SENSOR (VSS) REMOVAL/INSTALLATION [FS5A-EL].)

Wave profile Inspection

1. Remove the TCM. (See 05–17A–38 TCM REMOVAL/INSTALLATION [FS5A-EL].)
2. Connect WDS or equivalent to DLC connector.
3. Connect oscilloscope test leads to the following TCM connector terminals.
   - (+) lead: TCM terminal 2P
   - (-) lead: TCM terminal 1P
4. Start the engine.
5. Monitor VSS PID.
6. Inspect wave profile.
   - TCM terminal: 2P (+) - 1P (-)
   - Oscilloscope setting: 1 V/DIV (Y), 2.5 ms/DIV (X), DC range
   - Vehicle condition: drive the vehicle with 32 km/h{20 mph}
     — If wave profile or voltage are out of specifications, carry out the "Open Circuit Inspection" or "Short Circuit Inspection"

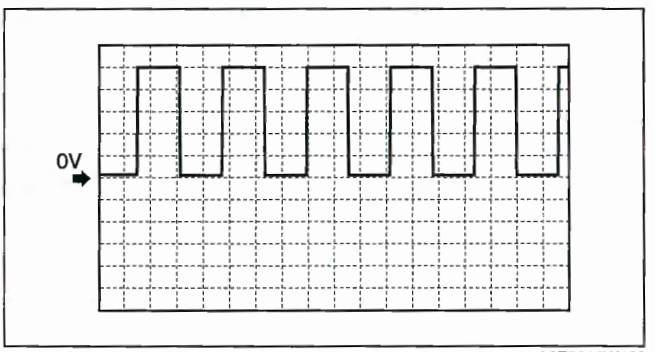

A6E5614W102

Power Supply Voltage Inspection

1. Disconnect the VSS connector.
2. Turn the ignition switch to ON.
3. Measure voltage at VSS connector terminal B (wiring harness side).

   Vehicle speed sensor (VSS) voltage
   4.5—5.5 V

   - If voltage is okay, go to Open Circuit Inspection and Short Circuit Inspection.
   - If voltage is wrong, repair wiring harness between VSS and TCM.

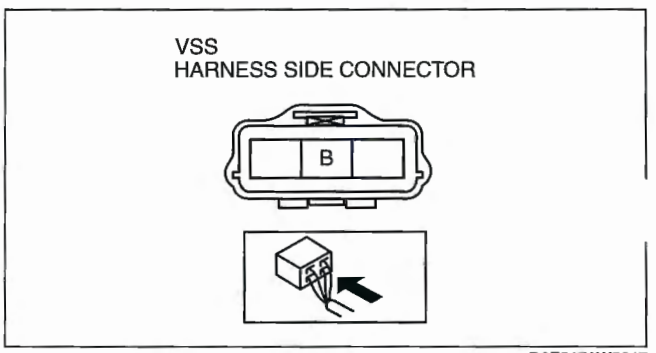

D6E517AW5017

Open Circuit Inspection

1. Inspect the following circuit for open.
   - Power circuit (VSS connector terminal A to main relay terminal D)
   - Ground circuit (VSS connector terminal C to GND)
   - If an open circuit or short circuit is found, repair the malfunctioning wiring harness.
   - If there are no open or short circuits, perform the sensor rotor inspection.

Short Circuit Inspection

1. Inspect the following circuit for short.
   - Power circuit (VSS connector terminal A to main relay terminal D)
   - If an open circuit or short circuit is found, repair the malfunctioning wiring harness.
   - If there are no open or short circuits, perform the sensor rotor inspection.

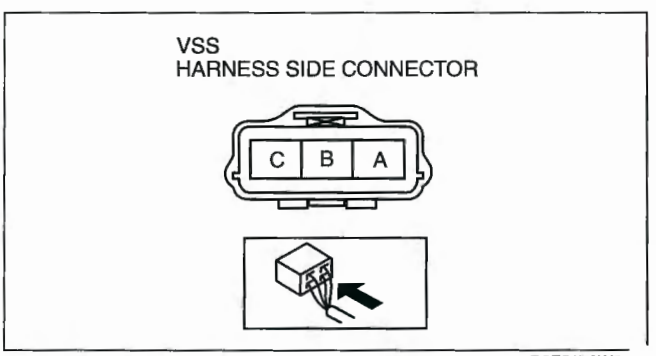

D6E517AW

Sensor Rotor Inspection

1. Remove the VSS. (See 05–17A–27 VEHICLE SPEED SENSOR (VSS) REMOVAL/INSTALLATION [FS5A-EL].)
   Shift the selector lever to N position.
   Inspect sensor rotor surface via VSS installation hole while rotating the front tire manually.
   (1) Is sensor rotor free of damage and cracks?
   (2) Is sensor rotor free of any metallic shavings or particles?
   - If sensor rotor is okay, replace the VSS.
   - If there is a problem, clean or replace the sensor rotor.

VEHICLE SPEED SENSOR (VSS) REMOVAL/INSTALLATION [FS5A-EL]

E6U051719200W17

Caution

- **Water or foreign objects entering the connector can cause a poor connection or corrosion. Be sure not to drop water or foreign objects on the connector when disconnecting it.**
- **If foreign materials are stuck to the VSS, disturbance by magnetic flux can cause sensor output to be abnormal and thereby negatively affect control. Make sure that foreign materials such as iron filings are not stuck to the VSS during installation.**

1. Disconnect the negative battery cable.
2. Remove the under cover.
3. Disconnect the VSS connector.
4. Remove the VSS.
5. Apply ATF to a new O-ring and install it on a new VSS.

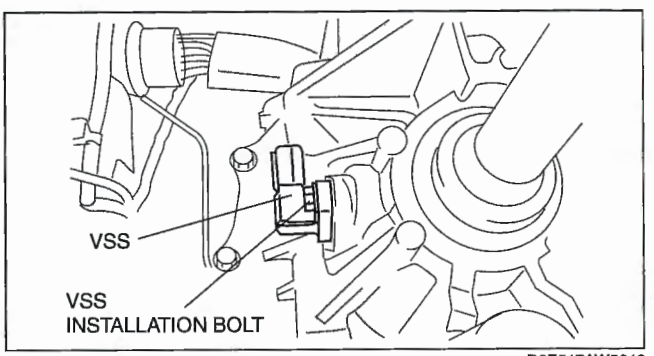

D6E517AW5019

6. Install the VSS.

   Tightening torque
   8—11 N·m {82—112 kgf·cm, 71—97 in·lbf}

7. Connect the VSS connector.
8. Install the under cover.
9. Connect the negative battery cable.

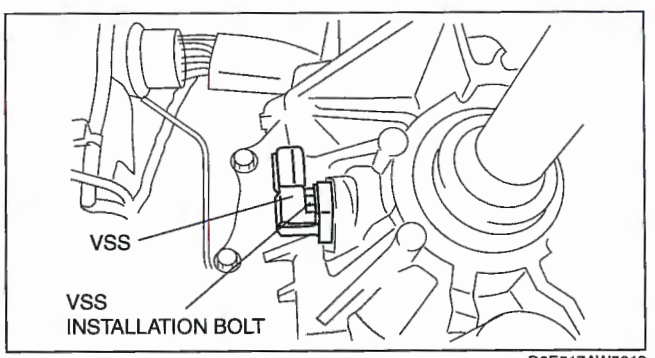

D6E517AW5019

SOLENOID VALVE INSPECTION (PRIMARY CONTROL VALVE BODY) [FS5A-EL]

E6U051721101W02

Resistance Inspection (On-Vehicle Inspection)

Caution
- **Water or foreign objects entering the connector can cause a poor connection or corrosion. Be sure not to drop water or foreign objects on the connector when disconnecting it.**

1. Disconnect the negative battery cable.
2. Remove the air cleaner component. (See 01–13A–4 INTAKE AIR SYSTEM REMOVAL/INSTALLATION [L3].)
3. Disconnect the transaxle connector (primary).

Note
- When inspecting the pressure control solenoid, connect the ground connection to the ground terminal (terminal I) of the pressure control solenoid inside the solenoid valve connector.

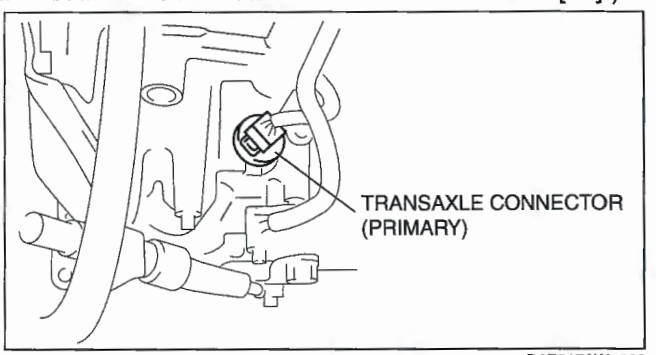

D6E517AW5008

4. Measure the resistance between the following terminals.
   - If not as specified, inspect the ground, then perform the operating inspection.

Primary control valve body (ATF temperature: –40—150 °C {–40—302 °F})

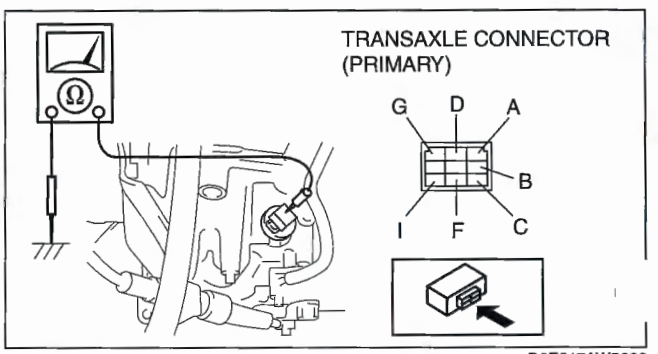

D6E517AW5020

Terminal	Solenoid valve	Resistance (ohm)
A—GND	Shift solenoid A	1.0—4.2
C—GND	Shift solenoid B	1.0—4.2
G—GND	Shift solenoid C	1.0—4.2
B—GND	Shift solenoid D	10.9—26.2
F—GND	Shift solenoid E	10.9—26.2
D—I	Pressure control solenoid A	2.4—7.3

5. Connect the transaxle connector (primary).
6. Install the air cleaner component. (See 01–13A–4 INTAKE AIR SYSTEM REMOVAL/INSTALLATION [L3].)
7. Connect the negative battery cable.

Operating Inspection

1. Disconnect the transaxle connector (primary).

Caution
- **Do not apply battery position voltage to terminals A, B, C, D, F and G for more than three seconds.**

Note
- Because the operation sound of the valves is small, perform inspection in a quiet place.

2. Apply battery positive voltage to terminals A,B,C, F or G and battery negative voltage to GND, and verify that operating sound is heard from solenoid.
   - If the "click" is not heard, inspect the transaxle harness.
     — If the transaxle harness is okay, perform the resistance inspection (off-vehicle inspection).
     — If there is a problem, repair or replace the transaxle harness.

3. Apply battery positive voltage to terminal D and battery negative voltage to terminal I, and verify that operating sound is heard from solenoid.
   - If the "click" is not heard, inspect the transaxle harness.
     — If transaxle harness is okay, perform the resistance inspection (off-vehicle inspection)
     — If there is a problem, repair or replace the transaxle harness.

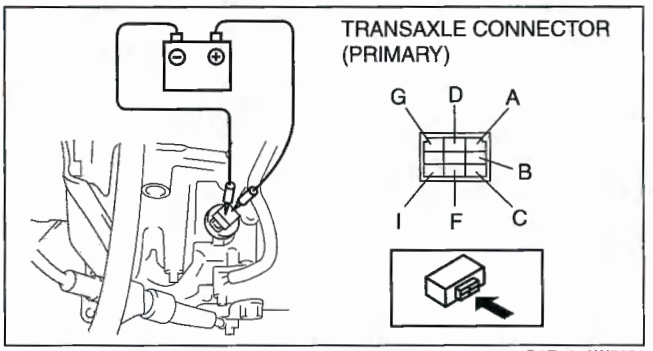

D6E517AW5021

Resistance Inspection (Off-Vehicle Inspection)

1. Disconnect the negative battery cable.
2. Remove the solenoid valve(s). (See 05–17A–30 SOLENOID VALVE REMOVAL/INSTALLATION (PRIMARY CONTROL VALVE BODY) [FS5A-EL].)
3. Measure the resistance of each solenoid valve individually.
   - If not as specified, replace the solenoid valve.
4. Install the solenoid valve(s). (See 05–17A–30 SOLENOID VALVE REMOVAL/INSTALLATION (PRIMARY CONTROL VALVE BODY) [FS5A-EL].)
5. Connect the negative battery cable.

05–17A

Pressure control solenoid A

Resistance
2.4—7.3 ohms
(ATF temperature: –40—150 °C {–40—302 °F})

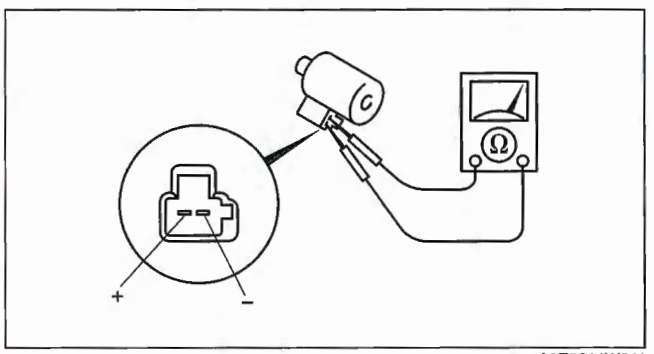

A6E5614W041

Shift solenoid A, B, C

Resistance
1.0—4.2 ohms
(ATF temperature: –40—150 °C {–40—302 °F})

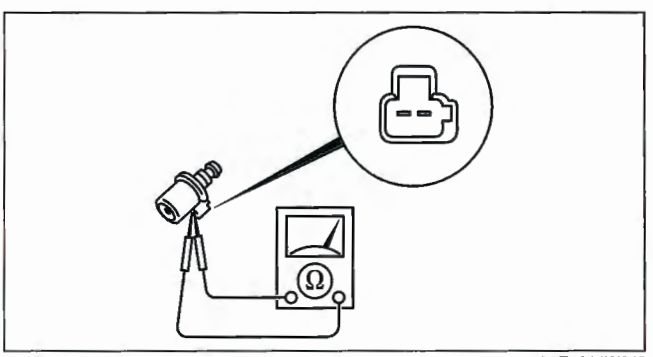

A6E5614W042

Shift solenoid D, E

Resistance
10.9—26.2 ohms
(ATF temperature: –40—150 °C {–40—302 °F})

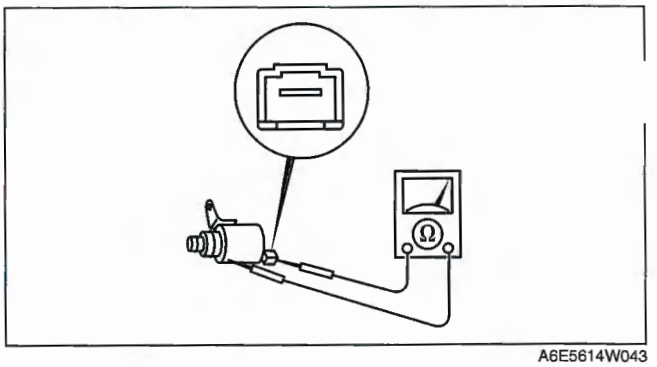
A6E5614W043

SOLENOID VALVE REMOVAL/INSTALLATION (PRIMARY CONTROL VALVE BODY) [FS5A-EL]

E6U051721101W03

1. Disconnect the negative battery cable.
2. Remove the under cover.
3. Drain the ATF.
4. Remove the oil pan.
5. Remove the primary control valve body. (See 05–17A–46 PRIMARY CONTROL VALVE BODY REMOVAL [FS5A-EL].)
6. Remove the solenoid valve(s).
7. Apply ATF to a new O-ring and install it on the solenoid valve.

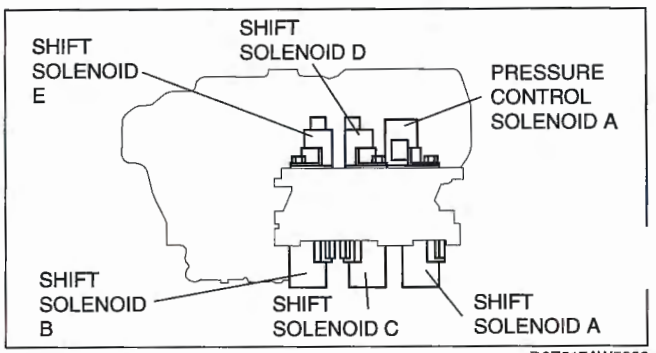

D6E517AW5022

8. Install the solenoid valve in the primary control valve body.

Tightening torque
7.8—10.8 N·m
{80—110 kgf·cm, 70—95.4 in·lbf}

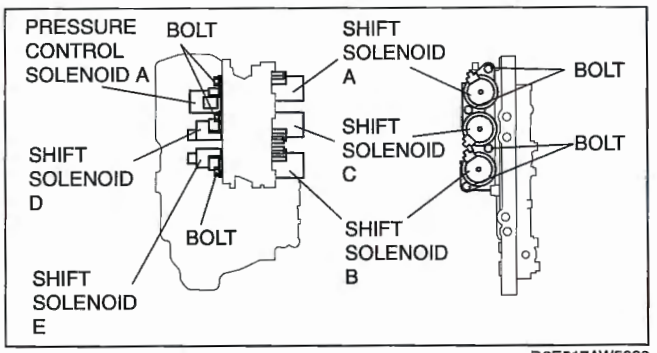

D6E517AW5023

9. Install the primary control valve body. (See 05–17A–46 PRIMARY CONTROL VALVE BODY REMOVAL [FS5A-EL].)
10. Install the oil pan. (See 05–17A–46 PRIMARY CONTROL VALVE BODY REMOVAL [FS5A-EL].)
11. Install the under cover.
12. Connect the negative battery cable.
13. Add ATF. (See 05–17A–12 AUTOMATIC TRANSAXLE FLUID (ATF) REPLACEMENT [FS5A-EL].)
14. Perform the mechanical system test. (See 05–17A–4 MECHANICAL SYSTEM TEST [FS5A-EL].)
15. Perform the road test. (See 05–17A–7 ROAD TEST [FS5A-EL].)

SOLENOID VALVE INSPECTION (SECONDARY CONTROL VALVE BODY) [FS5A-EL]

E6U051721101W04

Resistance Inspection (On-Vehicle Inspection)

Caution
- **Water or foreign objects entering the connector can cause a poor connection or corrosion. Be sure not to drop water or foreign objects on the connector when disconnecting it.**

1. Disconnect the negative battery cable.
2. Remove the battery and battery tray.
3. Disconnect the transaxle connector (secondary).

Note
- When inspecting the pressure control solenoid, connect the ground connection to the ground terminal (terminal I) of the pressure control solenoid inside the solenoid valve connector.

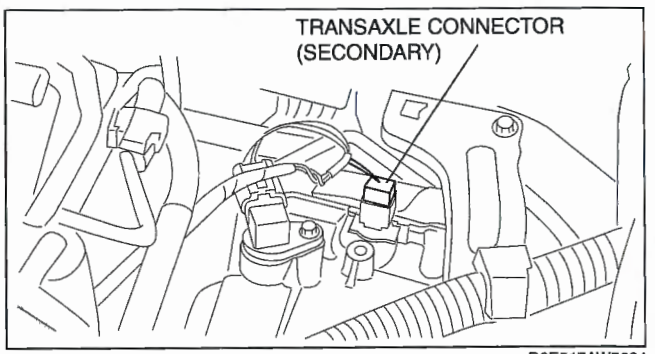

D6E517AW5024

4. Measure the resistance between the following terminals.
   - If not as specified, inspect the ground, then perform the operating inspection.

Secondary control valve body (ATF temperature: –40—150 °C {–40—302 °F})

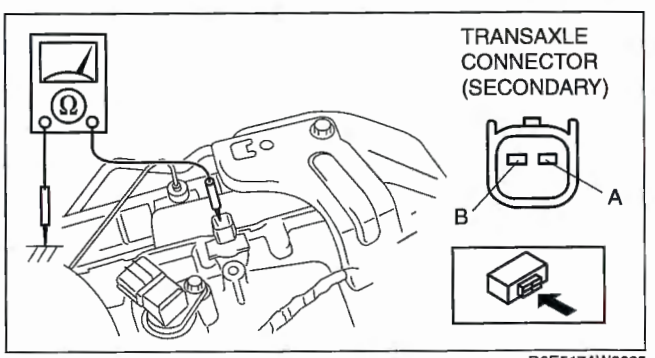

D6E517AW5025

Terminal	Solenoid valve	Resistance (ohm)
A—GND	Pressure control solenoid B	1.0—4.2
B—GND	Shift solenoid F	8.4—21.8

5. Connect the transaxle connector (secondary).
6. Install the battery and battery tray.
7. Connect the negative battery cable.

Operating Inspection

1. Disconnect the transaxle connector (secondary).

Caution
- **Do not apply battery position voltage to terminals A and B for more than three seconds.**

Note
- Because the operation sound of the valves is small, perform inspection in a quiet place.

2. Apply battery positive voltage to terminals A and B and battery negative voltage to GND, and verify that operating sound is heard from solenoid.
   - If the "click" is not heard, inspect the transaxle harness.
     — If the transaxle harness is okay, perform the resistance inspection (off-vehicle inspection).
     — If there is a problem, repair or replace the transaxle harness.

Resistance Inspection (Off-Vehicle Inspection)

1. Disconnect the negative battery cable.
2. Remove the battery and battery tray.
3. Remove the solenoid valve(s). (See 05–17A–32 SOLENOID VALVE REMOVAL/INSTALLATION (SECONDARY CONTROL VALVE BODY) [FS5A-EL].)
4. Measure the resistance of each solenoid valve individually.
   - If not as specified, replace the solenoid valve.
5. Install the solenoid valve(s). (See 05–17A–32 SOLENOID VALVE REMOVAL/INSTALLATION (SECONDARY CONTROL VALVE BODY) [FS5A-EL].)
6. Install the battery and battery tray.
7. Connect the negative battery cable.

Pressure control solenoid B

Resistance
1.0—4.2 ohms
(ATF temperature: –40—150 °C {–40—302 °F})

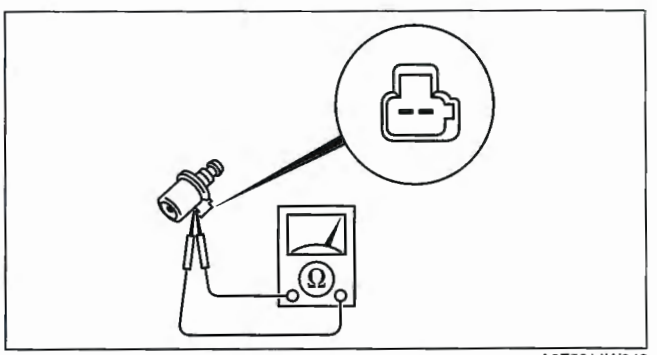

A6E5614W042

Shift solenoid F

Resistance
8.4—21.8 ohms
(ATF temperature: –40—150 °C {–40—302 °F})

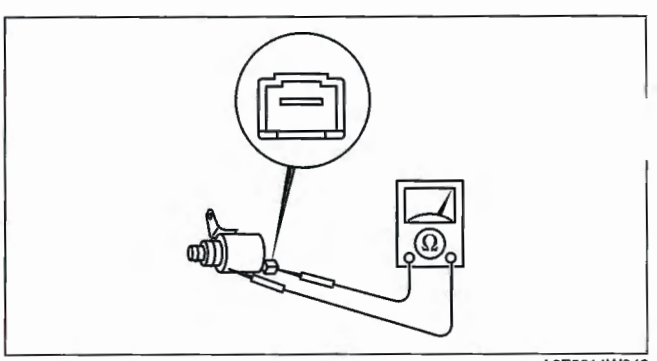

A6E5614W043

SOLENOID VALVE REMOVAL/INSTALLATION (SECONDARY CONTROL VALVE BODY) [FS5A-EL] E6U051721101W05

1. Disconnect the negative battery cable.
2. Remove the battery and battery tray.
3. Remove the under cover.
4. Drain the ATF.
5. Remove the oil cover.
6. Remove the secondary control valve body. (See 05–17A–48 SECONDARY CONTROL VALVE BODY REMOVAL [FS5A-EL].)
7. Remove the bracket.

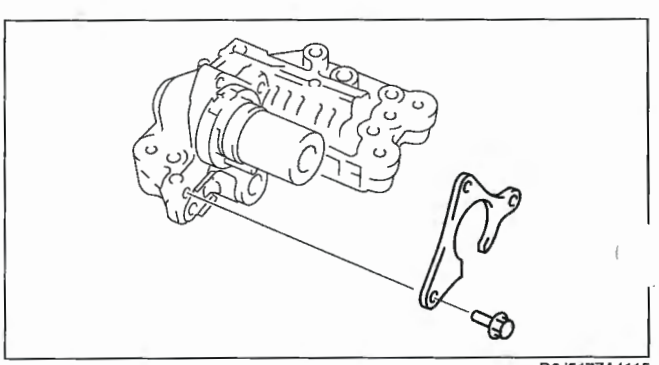

D6J517ZA4115

8. Remove the solenoid valve(s).
9. Apply ATF to a new O-ring and install it on the solenoid valve.
10. Install the solenoid valve in the secondary control valve body.

Tightening torque
7.8—10.8 N·m
{80—110 kgf·cm, 70—95.4 in·lbf}

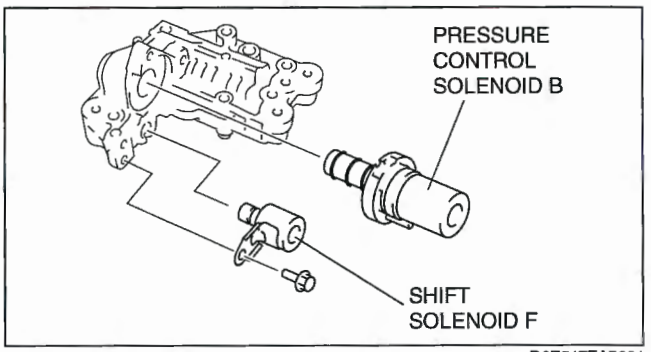

D6E517ZA5001

11. Install the secondary control valve body. (See 05–17A–48 SECONDARY CONTROL VALVE BODY REMOVAL [FS5A-EL].)
12. Install the oil cover. (See 05–17A–48 SECONDARY CONTROL VALVE BODY REMOVAL [FS5A-EL].)
13. Install the under cover.
14. Connect the negative battery cable.
15. Add ATF. (See 05–17A–12 AUTOMATIC TRANSAXLE FLUID (ATF) REPLACEMENT [FS5A-EL].)
16. Perform the mechanical system test. (See 05–17A–4 MECHANICAL SYSTEM TEST [FS5A-EL].)
17. Perform the road test. (See 05–17A–7 ROAD TEST [FS5A-EL].)

TCM INSPECTION [FS5A-EL]

E6U051718901W03

Caution
- **The TCM terminal voltages vary with changes in measuring and vehicle conditions. Always carry out a total inspection of the input and output systems, and the TCM to determine the cause of trouble. Otherwise, a mis-diagnosis could occur.**

1. Measure the voltage at each terminal.
   - If any incorrect voltage is detected, inspect the related system(s), wiring harnesses and connector(s) referring to the Action column in the terminal voltage table.

minal Voltage Table (Reference)

Note
- Use the ground of terminal 1O and 1P of the TCM when measuring terminal voltage, as an error may occur when connecting the negative circuit tester to ground.

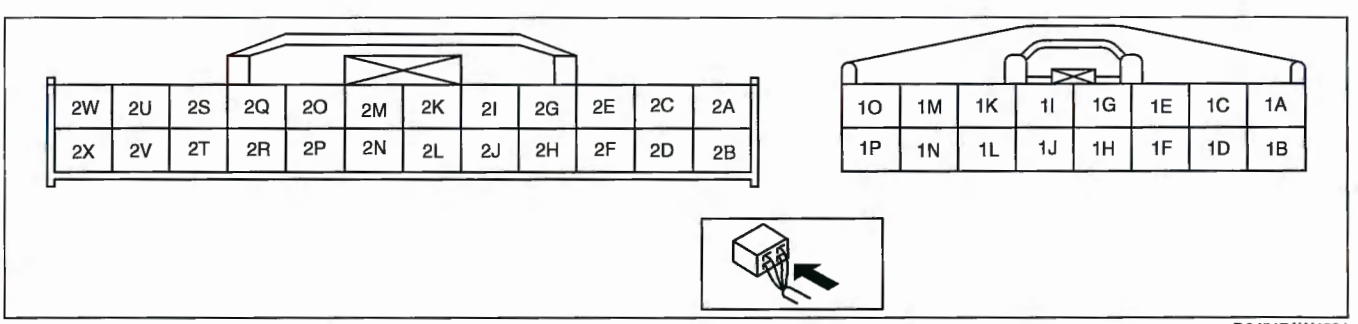

D6J517AW4031

Terminal	Signal	Connected to	Test condition	Voltage (V)	Action
1A	Shift solenoid A control	Shift solenoid A	• Inspect using the wave profile. (See 05–17A–36 Inspection Using an Oscilloscope (Reference).)		• Inspect shift solenoid A • Inspect related harness
1B	Shift solenoid B control	Shift solenoid B	• Inspect using the wave profile. (See 05–17A–36 Inspection Using an Oscilloscope (Reference).)		• Inspect shift solenoid B • Inspect related harness
1C	Shift solenoid C control	Shift solenoid C	• Inspect using the wave profile. (See 05–17A–36 Inspection Using an Oscilloscope (Reference).)		• Inspect shift solenoid C • Inspect related harness
1D	Pressure control solenoid B	Pressure control solenoid B	• Inspect using the wave profile. (See 05–17A–36 Inspection Using an Oscilloscope (Reference).)		• Inspect pressure control solenoid B • Inspect related harness

Terminal	Signal	Connected to	Test condition		Voltage (V)	Action
1E	Pressure control solenoid A (+)	Pressure control solenoid A	• Inspect using the wave profile. (See 05–17A–36 Inspection Using an Oscilloscope (Reference).)			• Inspect pressure control solenoid A • Inspect related harness
1F	Shift solenoid D control	Shift solenoid D	Selector lever is at P, N, D (2GR, 4GR, 5GR), M (1GR) position		B+	• Inspect shift solenoid D • Inspect related harness
			Other		Below 1.0	
1G	Pressure control solenoid A (–)	Pressure control solenoid A	• Inspect using the wave profile. (See 05–17A–36 Inspection Using an Oscilloscope (Reference).)			• Inspect pressure control solenoid A • Inspect related harness
1H	Shift solenoid E control	Shift solenoid E	Detects TCC operation		B+	• Inspect shift solenoid E • Inspect related harness
			Other		Below 1.0	
1I	—	—	—		—	—
1J	Shift solenoid F control	Shift solenoid F	1GR, 2GR, 3GR, 4GR		B+	• Inspect shift solenoid F • Inspect related harness
			5GR		Below 1.0	
1K	Back-up power supply	Battery (positive terminal)	Under any condition		B+	• Inspect battery • Inspect related harness
1L	Vehicle speed output	BCM	• Inspect using the wave profile. (See 05–17A–36 Inspection Using an Oscilloscope (Reference).)			• Inspect VSS • Inspect BCM • Inspect related harness
1M	B+	Main relay	Ignition switch OFF		Below 1.0	• Inspect battery • Inspect related harness
			Ignition switch ON		B+	
1N	B+	Main relay	Ignition switch OFF		Below 1.0	• Inspect battery • Inspect related harness
			Ignition switch ON		B+	
1O	GND	GND	Under any condition		Below 1.0	• Inspect related harness
1P	GND	GND	Under any condition		Below 1.0	• Inspect related harness
2A	—	—	—		—	—
2B	M range	M range switch	Ignition switch ON	Manual mode	Below 1.0	• Inspect M range switch (See 05–18–6 SELECTOR LEVER COMPONENT INSPECTION.) • Inspect related harness
				Other	B+	
2C	—	—	—		—	—
2D	Manual up	Up switch	Ignition switch ON	Detects up-shift operation of selector lever in M range	Below 1.0	• Inspect up switch (See 05–18–6 SELECTOR LEVER COMPONENT INSPECTION.) • Inspect related harness
				Other	B+	
2E	—	—	—		—	—
2F	Manual down	Down switch	Ignition switch ON	Detects down-shift operation of selector lever in M range	Below 1.0	• Inspect down switch (See 05–18–6 SELECTOR LEVER COMPONENT INSPECTION.) • Inspect related harness
				Other	B+	
2G	—	—	—		—	—

Terminal	Signal	Connected to	Test condition		Voltage (V)	Action
2H	Selector lever position	TR switch (terminal C)	Ignition switch ON	P position	Approx. 4.6	• Inspect TR switch (See 05–17A–12 TRANSAXLE RANGE (TR) SWITCH INSPECTION [FS5A-EL].) • Inspect related harness
				R position	Approx. 3.9	
				N position	Approx. 3.2	
				D range M range	Approx. 2.5	
2I	Input/turbine speed sensor (+)	Input/turbine speed sensor	• Inspect using the wave profile. (See 05–17A–36 Inspection Using an Oscilloscope (Reference).)			• Inspect input/turbine speed sensor • Inspect related harness
2J	Oil pressure	Oil pressure switch	Ignition switch ON	Detects forward clutch pressure	Below 1.0	• Inspect oil pressure switch • Inspect related harness
				Other	B+	
2K	Input/turbine speed sensor (–)	Input/turbine speed sensor	• Inspect using the wave profile. (See 05–17A–36 Inspection Using an Oscilloscope (Reference).)			• Inspect input/turbine speed sensor • Inspect related harness
2L	Secondary gear rotating speed	Intermediate sensor	• Inspect using the wave profile. (See 05–17A–36 Inspection Using an Oscilloscope (Reference).)			• Inspect intermediate sensor • Inspect related harness
2M	ATF temperature	TFT sensor	Ignition switch ON	TFT 20 °C {68 °F}	Approx. 3.3	• Inspect TFT sensor • Inspect related harness
				TFT 40 °C {104 °F}	Approx. 2.4	
				TFT 60 °C {140 °F}	Approx. 1.5	
2N	—	—	—		—	—
2O	Sensor GND	MAF/IAT sensor, HO2S (front, rear), Variable resistor, ECT sensor, TP sensor, MAP sensor, TFT sensor, TR switch	Under any condition		Below 1.0	• Inspect related harness
2P	Vehicle speed	VSS	• Inspect using the wave profile. (See 05–17A–36 Inspection Using an Oscilloscope (Reference).)			• Inspect VSS • Inspect related harness
2Q	—	—	—		—	—
2R	Main relay control	Main relay	Ignition switch OFF		B+	• Inspect main relay • Inspect related harness
			Ignition switch ON		Below 1.0	
2S	—	—	—		—	—
2T	—	—	—		—	—
2U	—	—	—		—	—
2V	—	—	—		—	—
2W	CAN_H	Instrument cluster, ABS HU/CM, ABS/TCS HU/CM, DSC HU/CM	Because this terminal is for CAN, adequate determination by terminal voltage is not possible.			—
2X	CAN_L	Instrument cluster, ABS HU/CM, ABS/TCS HU/CM, DSC HU/CM	Because this terminal is for CAN, adequate determination by terminal voltage is not possible.			—

Inspection Using an Oscilloscope (Reference)
Secondary gear rotating speed signal
TCM terminals
- 2L (+)—1P (–)

Oscilloscope setting
- 1 V/DIV (Y), 2.5 ms/DIV (X), DC range

Vehicle condition
- Drive the vehicle at approx. 32 km/h {19.9 mph}

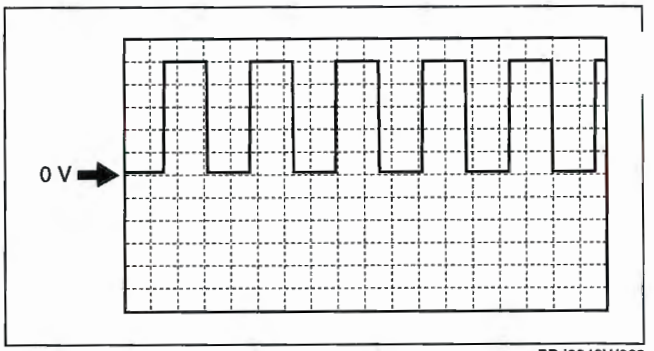

BDJ3940W032

VSS signal (input)
TCM terminals
- 2P (+)—1P (–)

Oscilloscope setting
- 1 V/DIV (Y), 2.5 ms/DIV (X), DC range

Vehicle condition
- Drive the vehicle at approx. 32 km/h {19.9 mph}

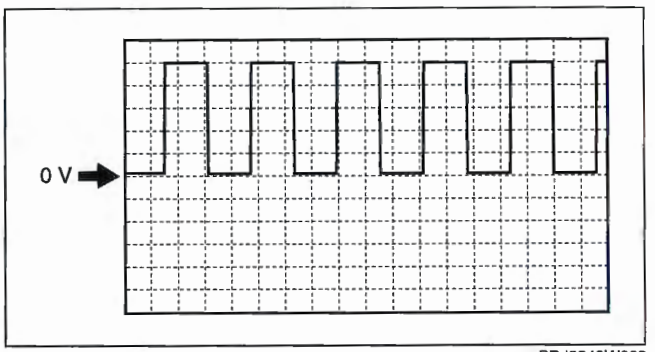

BDJ3940W032

Vehicle speed signal (output)
TCM terminals
- 1L (+)—1P (–)

Oscilloscope setting
- 1 V/DIV (Y), 5 ms/DIV (X), DC range

Vehicle condition
- Drive the vehicle at approx. 30 km/h {18.6 mph}

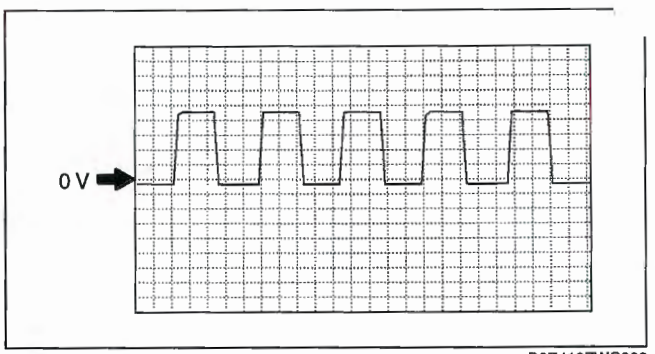

B6E413ZWC002

Input/turbine speed sensor signal
TCM terminals
- 2I (+)—1P (–)

Oscilloscope setting
- 500 mV/DIV (Y), 1 ms/DIV (X), DC range

Vehicle condition
- Idle after warm up (engine speed approx. 700 rpm, no load, P/S off, A/C off)

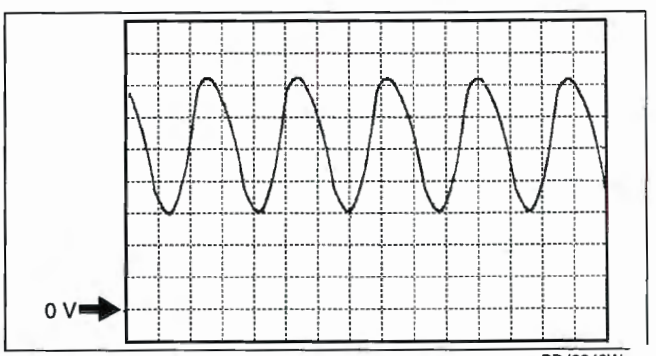

BDJ3940W

Pressure control solenoid A signal
(–)
TCM terminals
1G (+)—1P (–)
Oscilloscope setting
- 200 mV/DIV (Y), 1 ms/DIV (X), DC range

Vehicle condition
- Idle after warm up (engine speed approx. 700 rpm, no load, P/S off, A/C off)

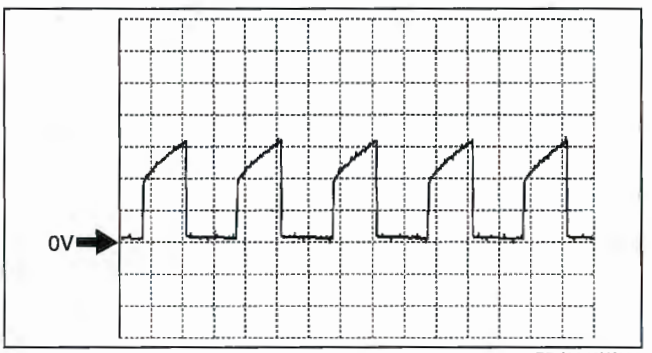

BDJ3940W028

(+)
TCM terminals
- 1E (+)—1P (–)

Oscilloscope setting
- 5 V/DIV (Y), 1 ms/DIV (X), DC range

Vehicle condition
- Idle after warm up (engine speed approx. 700 rpm, no load, P/S off, A/C off)

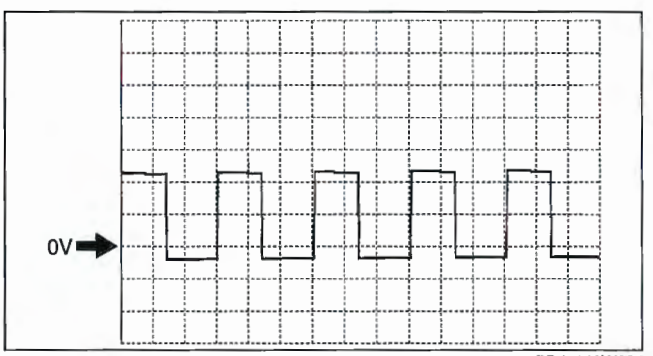

BDJ3940W027

Pressure control solenoid B signal
TCM terminals
1D (+)—1P (–)
Oscilloscope setting
- 5 V/DIV (Y), 5 ms/DIV (X), DC range

Vehicle condition
- 4GR→5GR, 5GR→4GR

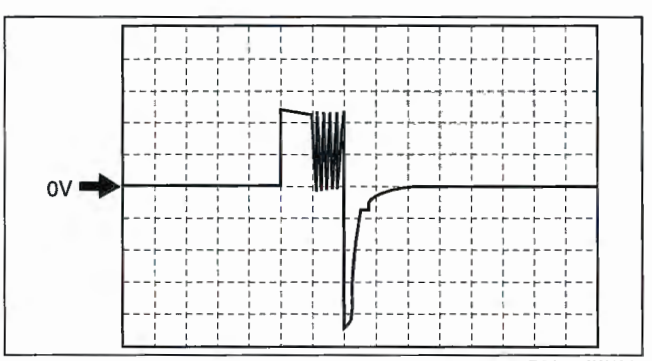

D6J517AW4045

Shift solenoid A control
TCM terminals
- 1A (+)—1P (–)

Oscilloscope setting
- 5 V/DIV (Y), 5 ms/DIV (X), DC range

Vehicle condition
- 4GR (D range)

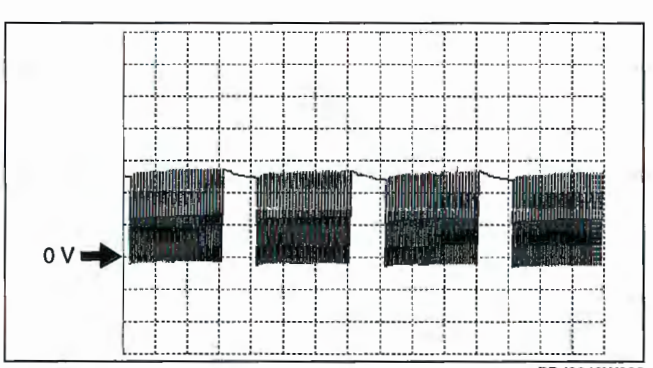

BDJ3940W029

Shift solenoid B control
TCM terminals
- 1B (+)—1P (–)

Oscilloscope setting
- 5 V/DIV (Y), 5 ms/DIV (X), DC range

Vehicle condition
- 1GR (D range)

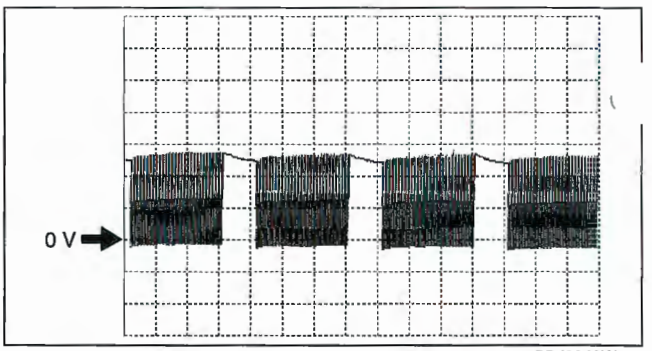

BDJ3940W030

Shift solenoid C control
TCM terminals
- 1C (+)—1P (–)

Oscilloscope setting
- 5 V/DIV (Y), 5 ms/DIV (X), DC range

Vehicle condition
- 1GR or 2GR

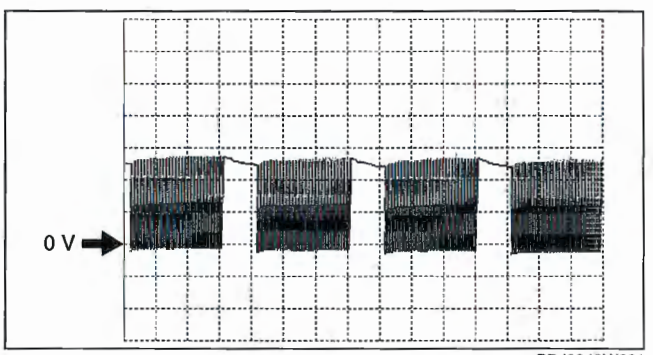

BDJ3940W031

TCM REMOVAL/INSTALLATION [FS5A-EL]

E6U051718901W

1. Disconnect the negative battery cable.
2. Remove in the order indicated in the table.
3. Install in the reverse order of removal.

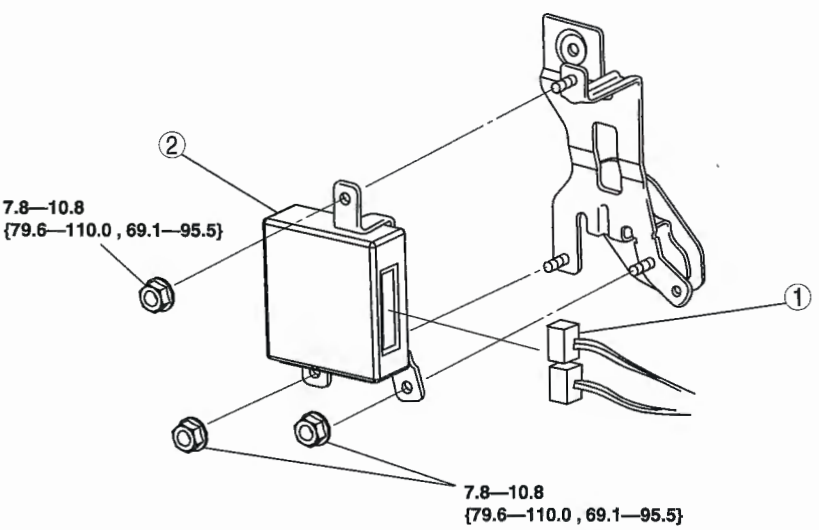

N·m {kgf·cm, in·lbf}

B6U0517W114

1	TCM connector	2	TCM

AUTOMATIC TRANSAXLE REMOVAL/INSTALLATION [FS5A-EL]

E6U051700000W11

1. Disconnect the negative battery cable.
2. Remove the battery and battery tray.
   Remove the air cleaner component. (See 01–13A–4 INTAKE AIR SYSTEM REMOVAL/INSTALLATION [L3].)
3. Remove the front tires and splash shield.
5. Remove the under cover.
6. Remove the steering gear and linkage, and pipe assembly installation bolts from the front crossmember, then suspend the steering gear and linkage with a cable. (See 06–12–11 STEERING GEAR AND LINKAGE REMOVAL/INSTALLATION [L3].)

   Pipe assembly tightening torque
   7.8—10.8 N·m {79.6—110.0 kgf·cm, 69.1—95.5 in·lbf}

7. Drain the ATF. (See 05–17A–12 AUTOMATIC TRANSAXLE FLUID (ATF) REPLACEMENT [FS5A-EL].)

   Warning
   - **Improperly jacking a transaxle is dangerous. It can slip off the jack and may cause serious injury.**

   Caution
   - **To prevent the torque converter and transaxle from separating, remove the transaxle without tilting it toward the torque converter.**

8. Remove in the order shown in the figure.
9. Install in the reverse order of removal.
10. Add ATF. (See 05–17A–12 AUTOMATIC TRANSAXLE FLUID (ATF) REPLACEMENT [FS5A-EL].)
11. Carry out the mechanical system test. (See 05–17A–4 MECHANICAL SYSTEM TEST [FS5A-EL].)

Service item	Test item		
	Line pressure test	Stall test	Time lag test
ATX replacement	×		
ATX overhaul	×	×	×
Torque converter replacement	×	×	
Oil pump replacement	×		
Clutch system replacement	×		×

× : Test to be performed after the service work

12. Carry out the road test. (See 05–17A–7 ROAD TEST [FS5A-EL].)

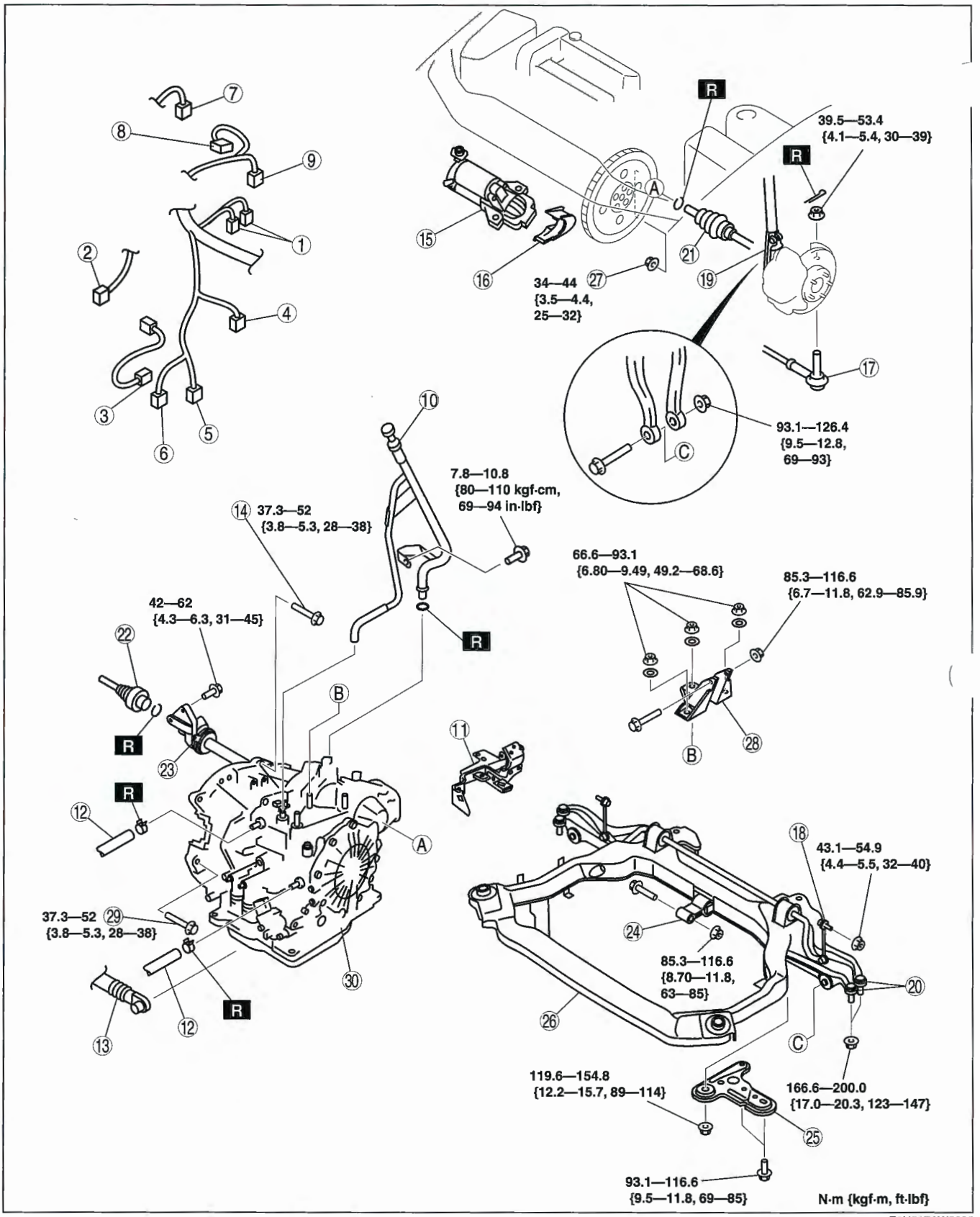

E6U517AW5005

1	O_2 sensor connector
2	Oil pressure switch connector (for oil filter)
3	Oil pressure switch connector (for ATX)
4	Input/turbine speed sensor connector

5	TR switch connector
6	Transaxle connector (primary)
7	VSS connector
8	Intermediate sensor connector

9	Transaxle connector (secondary)
10	Oil dipstick and filler tube
11	Harness bracket
2	Oil hose
13	Selector cable
14	Transaxle mounting bolt (upper side)
15	Starter
16	Endplate cover
17	Tie-rod end ball joint (See 06–12–12 Tie-rod End Ball Joint Removal Note)
18	Stabilizer control link
19	Damper fork
20	Lower arm (front, rear) ball joint (See 02–13–11 Front Lower Arm (Front) Ball Joint Removal Note.)
21	Drive shaft (See 03–13–16 FRONT DRIVE SHAFT REMOVAL/ INSTALLATION [L3, L3 WITH TC].)
22	Drive shaft (See 03–13–16 FRONT DRIVE SHAFT REMOVAL/ INSTALLATION [L3, L3 WITH TC].)
23	Joint shaft (See 03–13–3 JOINT SHAFT REMOVAL/ INSTALLATION [L3].)
24	No.1 engine mount (See 05–17A–45 No.1 Engine Mount and No.4 Engine Mount Bracket Installation Note.)
25	Crossmember bracket
26	Crossmember (See 02–13–20 FRONT CROSSMEMBER REMOVAL/INSTALLATION.)
27	Torque converter installation nuts (See 05–17A–44 Torque Converter Nuts Removal Note)(See05–17A–44 Torque Converter Nuts Installation Note.)
28	No.4 engine mount (See 05–17A–41 No.4 Engine Mount Bracket Removal Note) (See 05–17A–45 No.1 Engine Mount and No.4 Engine Mount Bracket Installation Note.)
29	Transaxle mounting bolt (lower side)
30	Transaxle (See 05–17A–43 Transaxle Removal Note) (See 05–17A–43 Transaxle Installation Note.)

No.4 Engine Mount Bracket Removal Note

1. Install the **SST** using the following procedure.

Caution

- **Refer to the SST instruction manual for the basic handing procedure.**

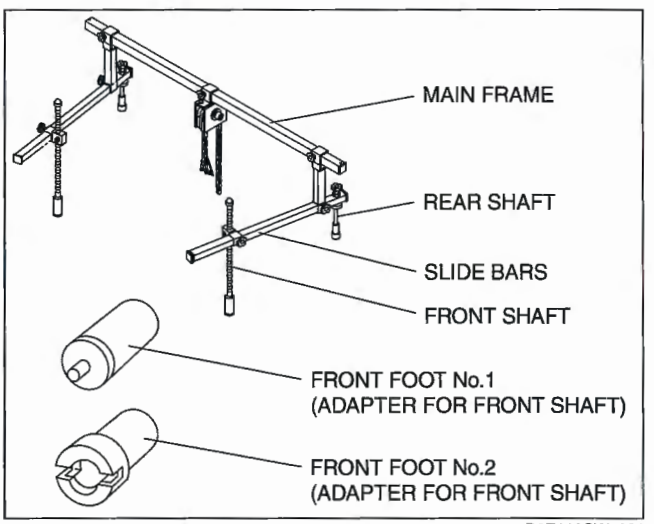

D6E110CW7001

(1) Install the right rear shaft of the **SST** to the bolt of the right shock absorber as shown in the figure.
(2) Install the left rear shaft of the **SST** to the bolt of the left shock absorber. (Identical position to the right side)

Caution
- **When setting the SST on the right side, make sure it doesn't interfere with the ABS/TCS HU/CM.**

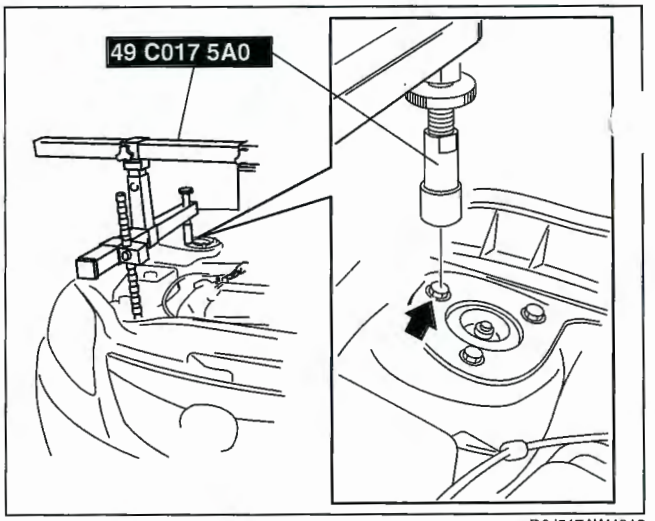

D6J517AW4012

(3) Install the left/right front shaft of the **SST** with front foot No.2 to the bolt as shown in the figure.

* : If epuipped.

(4) Adjust the positions of the **SST** side bars so that they are the same height (left and right) and horizontal.
(5) Make sure each joint is securely tightened.

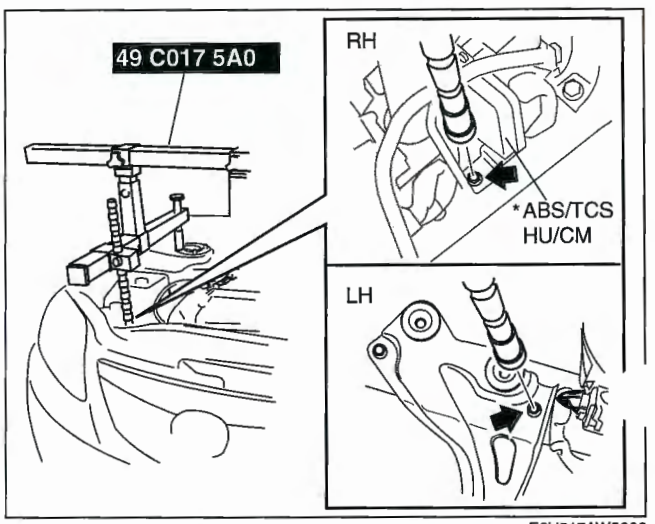

E6U517AW5003

2. Support the engine using the **SST**.

Note
- The SST (49 E017 5A0) can be used in place of the SST (49 C017 5A0).

3. Remove the No.4 engine mount.

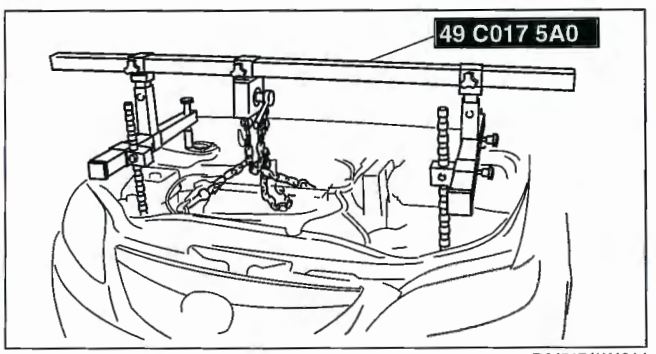

D6J517AW4014

Transaxle Removal Note

1. Lean the engine toward the transaxle.
2. Support the transaxle on a jack.
   Remove the transaxle mounting bolts.

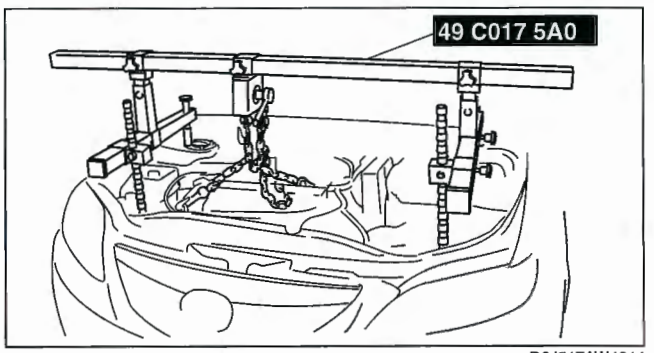

D6J517AW4014

4. Remove the transaxle.

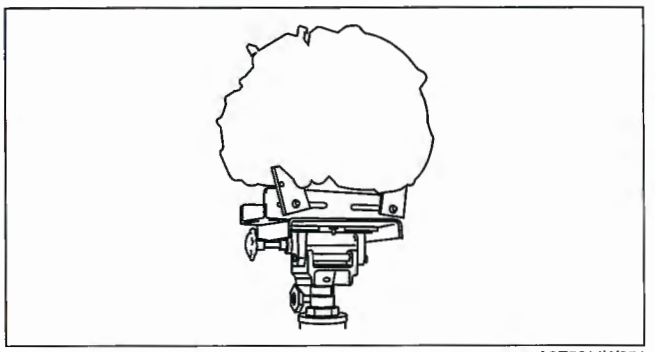
A6E5614W051

Transaxle Installation Note

1. Set the transaxle on a jack and lift it.
2. Install the transaxle mounting bolts.

Bolt length (measured from below the head)
A: 50 mm {1.967 in}
B: 65 mm {2.559 in}

Tightening torque
37.3—52 N·m {3.8—5.3 kgf·m, 28—38 ft·lbf}

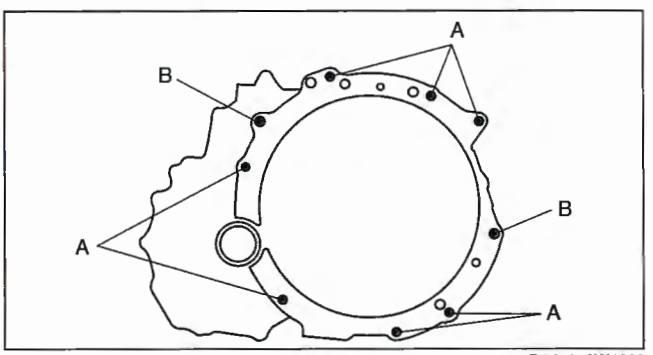

D6J517AW4009

Torque Converter Nuts Removal Note

1. Hold the crankshaft pulley to prevent drive plate from rotating.

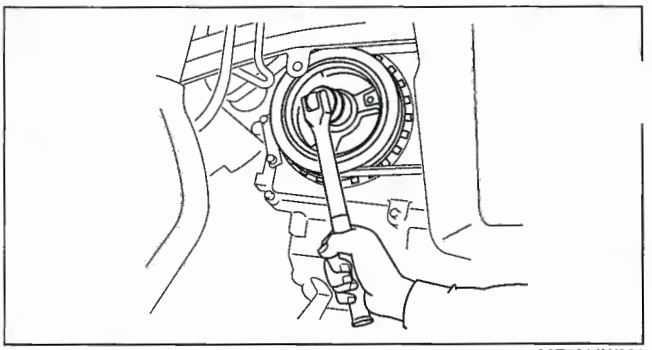

A6E5614W091

2. Remove the torque converter nuts from the starter installation hole.

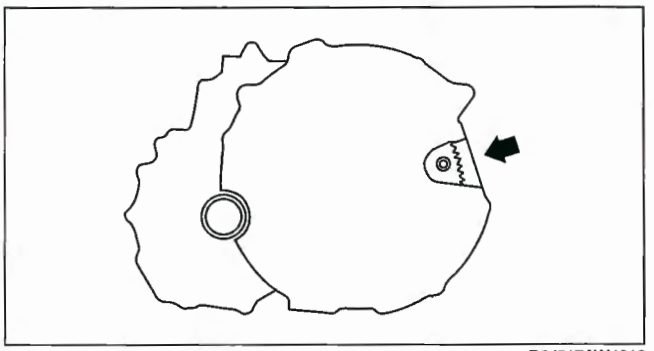

D6J517AW4010

Torque Converter Nuts Installation Note

1. Hold the crankshaft pulley to prevent drive plate from rotating.

Caution

- **Loosely and equally tighten the torque converter nuts, then further tighten them to the specified tightening torque.**

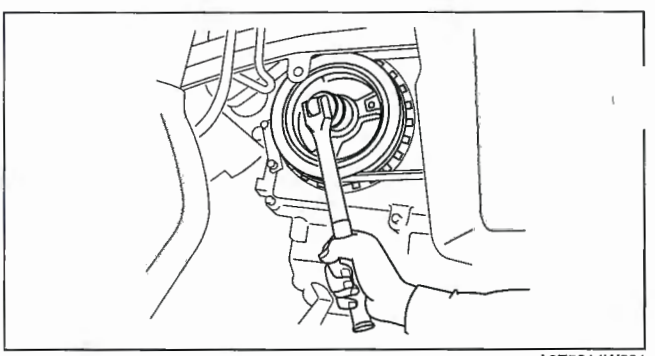

A6E5614W091

2. Tighten the torque converter mounting nuts.

Tightening torque
34.3—60.8 N·m {3.5—6.2 kgf·m, 25—45 ft·lbf}

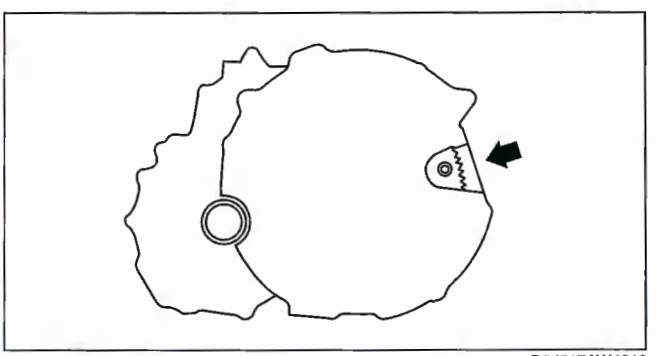

D6J517AW4010

No.1 Engine Mount and No.4 Engine Mount Bracket Installation Note

1. Verify that the engine mount rubbers are installed as shown.
2. By aligning the holes with the stud bolts, install the No.4 engine mount bracket to the transaxle.
   By aligning the holes with the stud bolts, install the No.1 engine mount to the transaxle.
   Align the hole of the No.4 engine mount bracket with the No.4 engine mount rubber on vehicle, and temporarily tighten the bolt D.
5. Tighten the nut B,C in order of B→C, then bolt A.
6. Tighten the bolt D.

Tightening torque
A, B, C: 66.6—93.1 N·m {6.8—9.4 kgf·m, 50—68 ft·lbf}
D: 85.3—116.6 N·m {8.7—11.8 kgf·m, 63—85 ft·lbf}

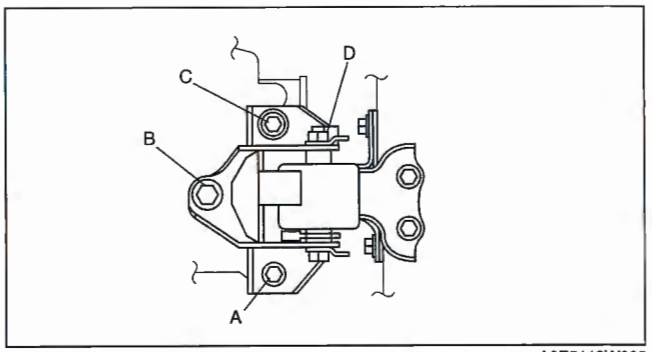

A6E5112W005

7. Tighten the bolt E to the No.1 engine mount.

Tightening torque
E: 85.3—116.6 N·m {8.7—11.8 kgf·m, 63—85 ft·lbf}

8. Remove the **SST** (49 C017 5A0).

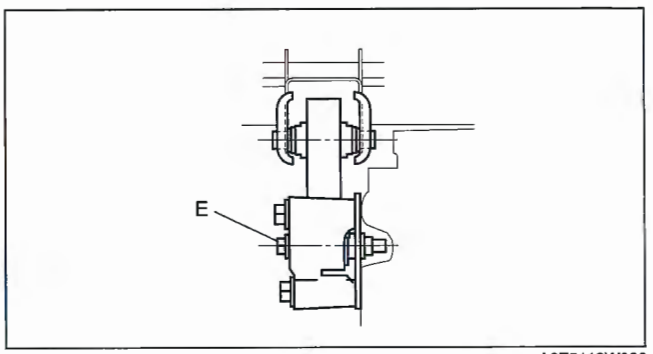

A6E5112W006

OIL SEAL REPLACEMENT [FS5A-EL]

E6U051719240W01

1. Drain the ATF. (See 05–17A–12 AUTOMATIC TRANSAXLE FLUID (ATF) REPLACEMENT [FS5A-EL].)

Caution
- **The oil seal is easily damaged by the sharp edges of the drive shaft splines. Do not let the splines contact the oil seal.**

2. Remove the drive shaft. (See 03–13–16 FRONT DRIVE SHAFT REMOVAL/INSTALLATION [L3, L3 WITH TC].)
3. Remove the oil seal.
4. Using the **SST** and a hammer, tap a new oil seal in evenly until the **SST** contacts the transaxle case.
5. Coat the lip of the oil seal with transaxle oil.
6. Install the drive shaft. (See 03–13–16 FRONT DRIVE SHAFT REMOVAL/INSTALLATION [L3, L3 WITH TC].)
7. Add ATF. (See 05–17A–12 AUTOMATIC TRANSAXLE FLUID (ATF) REPLACEMENT [FS5A-EL].)
8. Carry out the mechanical system test. (See 05–17A–4 MECHANICAL SYSTEM TEST [FS5A-EL].)

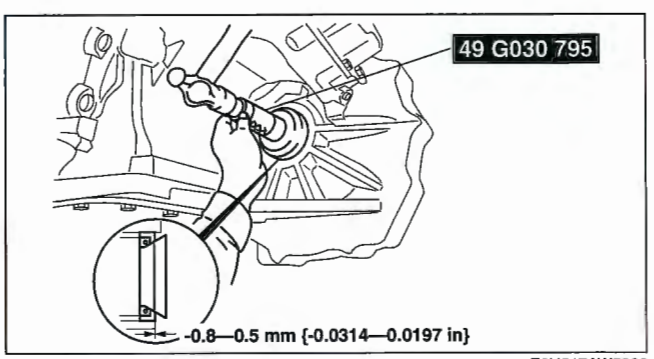

E6U517AW5006

PRIMARY CONTROL VALVE BODY REMOVAL [FS5A-EL]

E6U051721100W02

On-Vehicle Removal

Warning

- **Using compressed air can cause dirt and other particles to fly out, causing injury to the eyes. Wear protective eyes whenever using compressed air.**

Caution

- **Clean the transaxle exterior throughout with a steam cleaner or cleaning solvents before removal.**
- **If any old sealant gets into the transaxle during installation of the oil pan, trouble may occur in the transaxle case and oil pan. Clean with cleaning fluids.**

1. Disconnect the negative battery cable.
2. Drain the ATF into a separate suitable container. (See 05–17A–12 AUTOMATIC TRANSAXLE FLUID (ATF) REPLACEMENT [FS5A-EL].)
3. Remove the under cover.
4. Remove the front tires and splash shield.
5. Remove the crossmember. (See 02–13–20 FRONT CROSSMEMBER REMOVAL/INSTALLATION.)
6. Remove the oil pan.
7. Disconnect the solenoid connectors and GND.
8. Remove the oil strainer.

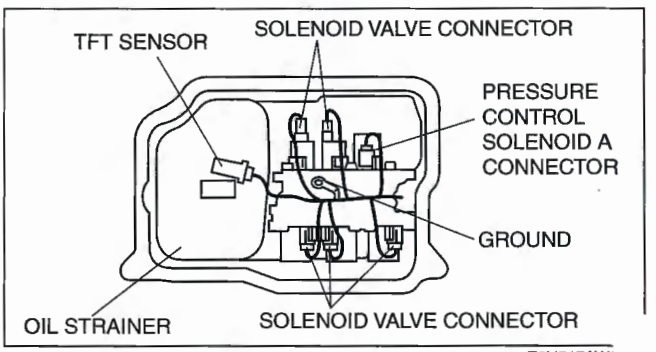

E6U517AW

9. Remove the primary control valve body installation bolts as shown, then remove the primary control valve body component as shown.

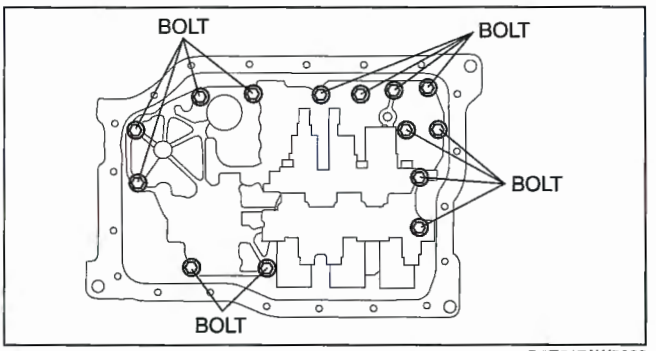

D6E517AW5029

10. Remove the accumulators and accumulator springs.

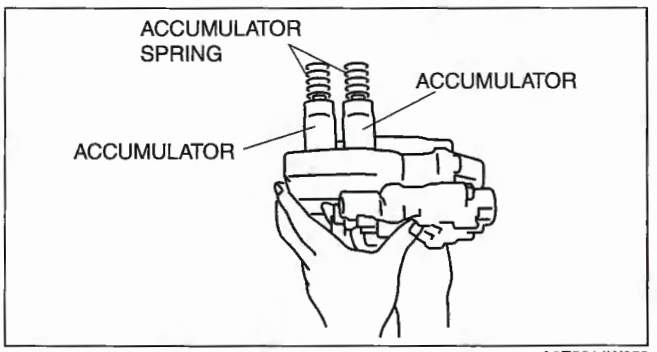

A6E5614W059

PRIMARY CONTROL VALVE BODY INSTALLATION [FS5A-EL]

E6U051721100W03

On-Vehicle Installation

Caution
- **Be sure to align the parking rod and the manual valve.**

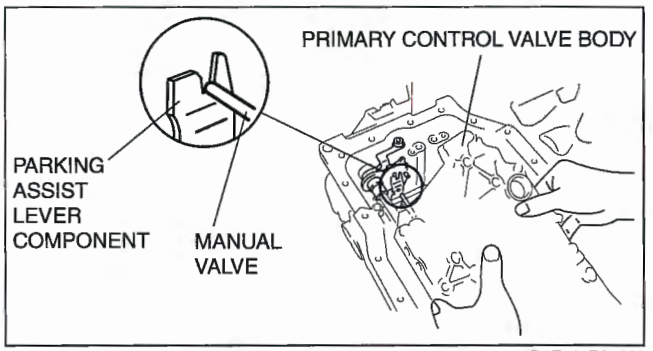

D6E517ZA5002

1. Install the accumulator springs and accumulators into the transaxle case.

Spring	Outer diameter (mm {in})	Free Length (mm {in})	No. of coils	Wire diameter (mm {in})
Servo apply accumulator large spring	21.0 {0.827}	67.8 {2.669}	10.3	3.5 {0.138}
Servo apply accumulator small spring	13.0 {0.512}	67.8 {2.669}	17.1	2.2 {0.087}
Forward accumulator large spring	21.0 {0.827}	75.0 {2.953}	10.7	2.3 {0.091}
Forward accumulator small spring	15.6 {0.614}	49.0 {1.929}	7.7	2.4 {0.094}

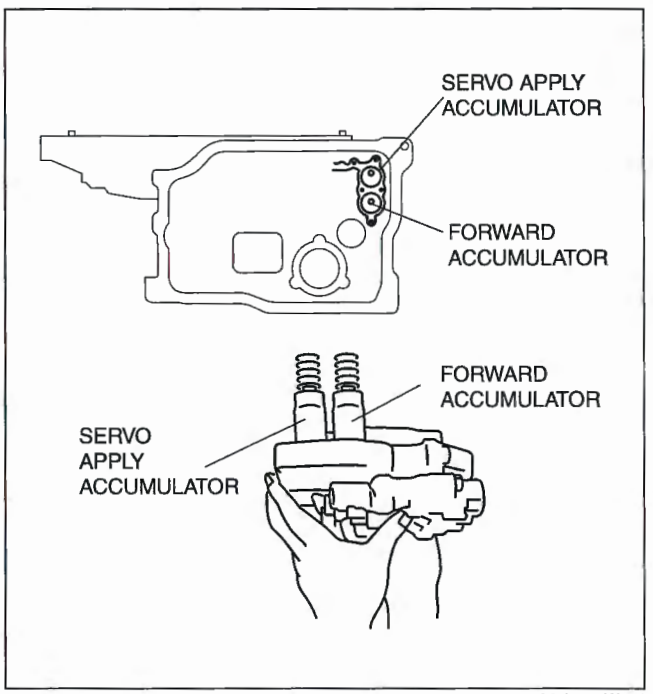

A6E5614W061

2. Install the primary control valve body component.

Tightening torque
7.8—10.8 N·m
{80—110 kgf·cm, 70—95 in·lbf}

Bolt length (measured from below the head)
B: 40 mm {1.575 in}
No mark: 70 mm {2.756 in}

3. Install the oil strainer.

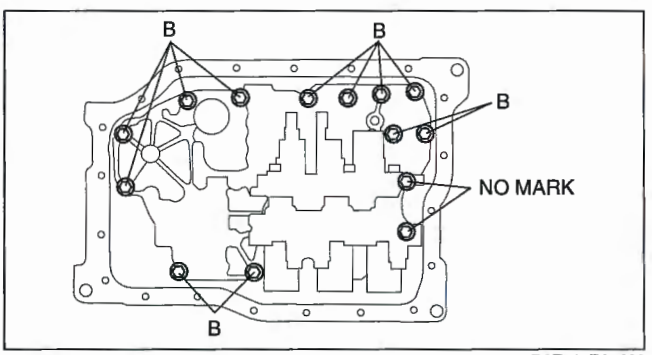

D6E517ZA5003

4. Match the harness colors, then connect the solenoid connectors and GND, and install the TFT sensor.

Spring	Color of connector (harness side)
Pressure control solenoid A	Black
Shift solenoid A	White
Shift solenoid B	Blue
Shift solenoid C	Green
Shift solenoid D	White
Shift solenoid E	Black

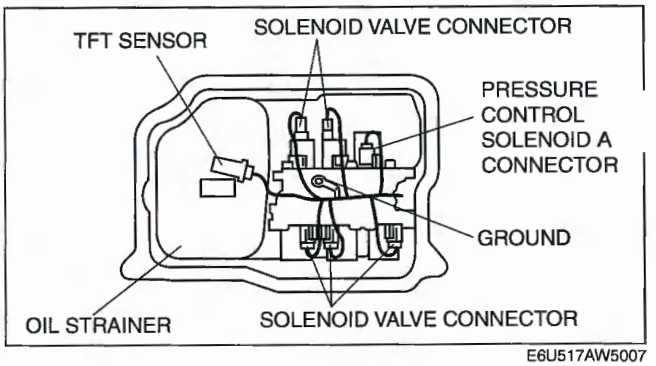

E6U517AW5007

Tightening torque
7.8—10.8 N·m {80—110 kgf·cm, 70—95 in·lbf}

5. Apply a light coat of silicon sealant to the contact surfaces of the oil pan and transaxle case.
6. Install the oil pan.

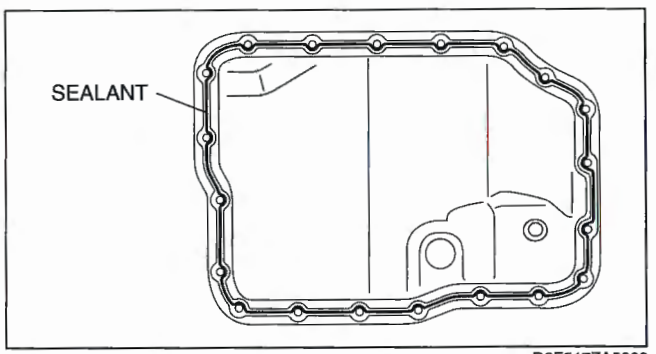

D6E517ZA5008

Tightening torque
6—8 N·m {62—81 kgf·cm, 53—70 in·lbf}

7. Install the crossmember. (See 02–13–20 FRONT CROSSMEMBER REMOVAL/INSTALLATION.)
8. Install the front tires and splash shield.
9. Install the under cover.
10. Connect the negative battery cable.
11. Add ATF. (See 05–17A–12 AUTOMATIC TRANSAXLE FLUID (ATF) REPLACEMENT [FS5A-EL].)
12. Carry out the mechanical system test. (See 05–17A–4 MECHANICAL SYSTEM TEST [FS5A-EL].)
13. Carry out the road test. (See 05–17A–7 ROAD TEST [FS5A-EL].)

SECONDARY CONTROL VALVE BODY REMOVAL [FS5A-EL]

E6U051721100W04

On-Vehicle Removal

Warning
- **Using compressed air can cause dirt and other particles to fly out, causing injury to the eyes. Wear protective eyes whenever using compressed air.**

Caution
- **Clean the transaxle exterior throughout with a steam cleaner or cleaning solvents before removal.**
- **If any old sealant gets into the transaxle during installation of the oil pan, trouble may occur in the transaxle case and oil pan. Clean with cleaning fluids.**

1. Disconnect the negative battery cable.
2. Remove the battery and battery tray.
3. Remove the bracket in the figure.
4. Drain the ATF into a separate suitable container. (See 05–17A–12 AUTOMATIC TRANSAXLE FLUID (ATF) REPLACEMENT [FS5A-EL].)
5. Remove the oil cover.

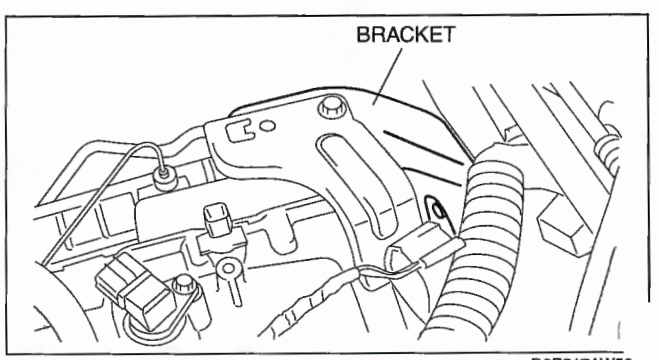

D6E517AW50

6. Disconnect the solenoid connectors.

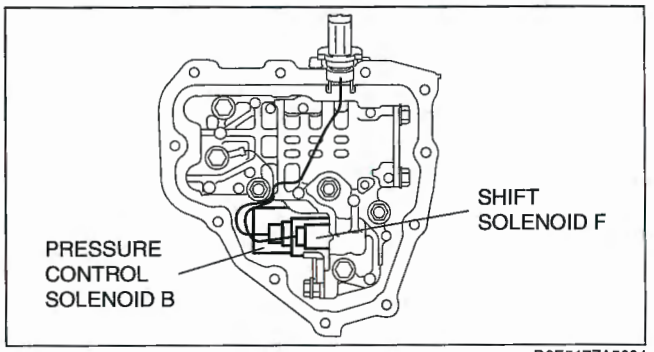

D6E517ZA5004

7. Remove the secondary control valve body installation bolts as shown, then remove the secondary control valve body component and ground as shown.

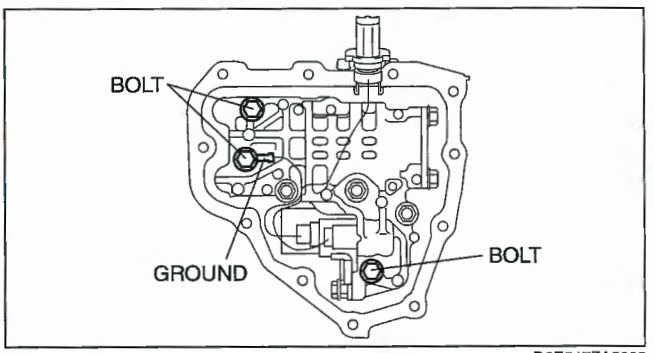

D6E517ZA5005

8. Remove the tubular pin and O-ring.

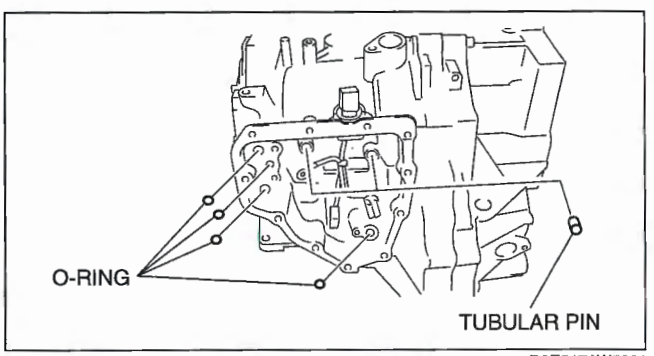

D6E517AW5031

SECONDARY CONTROL VALVE BODY INSTALLATION [FS5A-EL]

E6U051721100W05

On-Vehicle Installation

1. Install the tubular pin and new O-ring to the transaxle case.

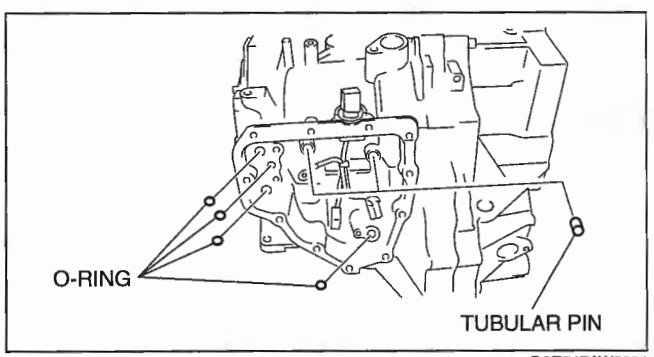

D6E517AW5031

2. Install the secondary control valve body component and ground.

Tightening torque
7.8—10.8 N·m
{80—110 kgf·cm, 70—95 in·lbf}

Bolt length (measured from below the head)
B: 40 mm {1.575 in}
C: 50 mm {1.967 in}

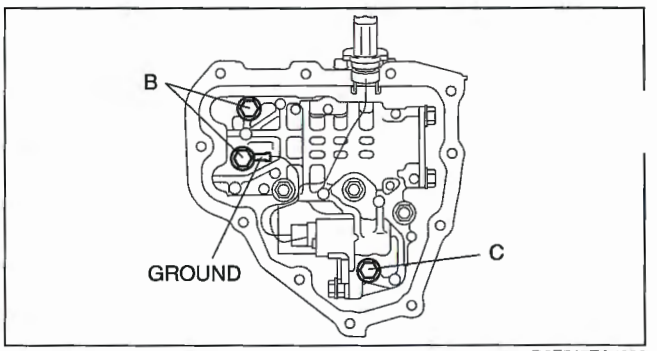

D6E517ZA5006

3. Match the harness colors, then connect the solenoid connector.

Spring	Color of connector (harness side)
Pressure control solenoid B	White
Shift solenoid F	Black

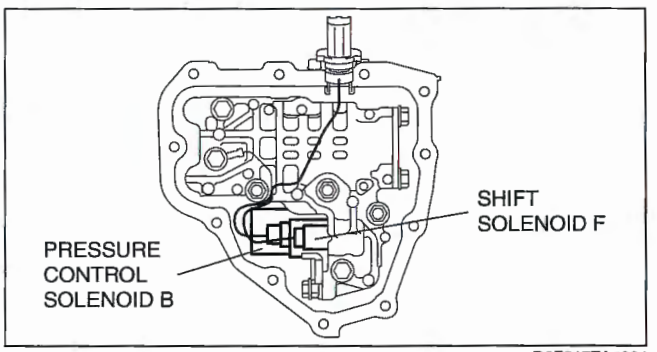

D6E517ZA5004

4. Apply a light coat of silicon sealant to the contact surfaces of the oil cover and transaxle case.
5. Install the oil cover.

Tightening torque
7.8—10.8 N·m {80—109 kgf·cm, 70—95 in·lbf}

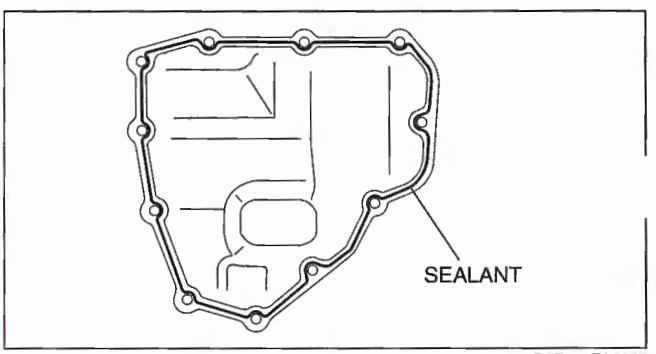

D6E517ZA5007

6. Install the bracket in the figure.

Tightening torque
18—26 N·m {1.9—2.6 kgf·m, 14—19 ft·lbf}

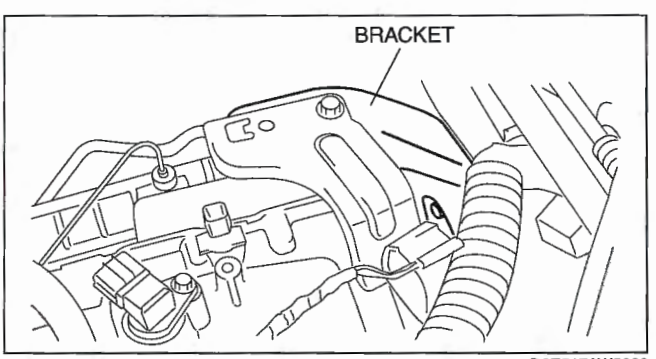

D6E517AW5030

7. Install the battery and battery tray.
8. Connect the negative battery cable.
9. Add ATF. (See 05–17A–12 AUTOMATIC TRANSAXLE FLUID (ATF) REPLACEMENT [FS5A-EL].)
10. Carry out the mechanical system test. (See 05–17A–4 MECHANICAL SYSTEM TEST [FS5A-EL].)
11. Carry out the road test. (See 05–17A–7 ROAD TEST [FS5A-EL].)

OIL COOLER FLUSHING [FS5A-EL]

E6U051719900W04

Note
- The contaminated cooler line (oil pipes and hoses) and auxiliary cooler must be flushed completely when ATX is overhauled or replaced.

1. Remove the two oil cooler line hoses and apply air pressure of **196 kPa {2.0 kgf/cm^2, 28 psi}** from the return hose (pipe) side.

Caution
- **Power flushing should be performed very carefully when removing the accumulated debris from the fluid baffle, otherwise the debris cannot be removed or the problem becomes even worse.**

2. If there is no air blown out the feed side, flush the oil cooler lines using the power-flushing tool. (See 05–17A–51 Power Flushing)

Recommended power-flushing manufacturer

Manufacturer	Part number	Description
Kent Moore	J35944-AMAZ	Flushing kit or equivalent
OTC	60081	Portable torque converter, oil cooler cleaner or equivalent

3. If there is ventilation, carry out the following steps.
   (1) Remove the oil pan and inspect the fluid filter element from the front filter.
   (2) If the element is covered with too much debris or particles and cannot be seen, replace the oil cooler. (See 05–17A–52 OIL COOLER REMOVAL/INSTALLATION [FS5A-EL].) (See 05–17A–54 OIL COOLER DISASSEMBLY/ ASSEMBLY [FS5A-EL].)
   (3) If the element can be seen, flush the oil cooler lines using the power-flushing tool.
   - Performing back and reverse power flushing two times each does not work because debris or particles flow out from the feed pipe side of ATX.

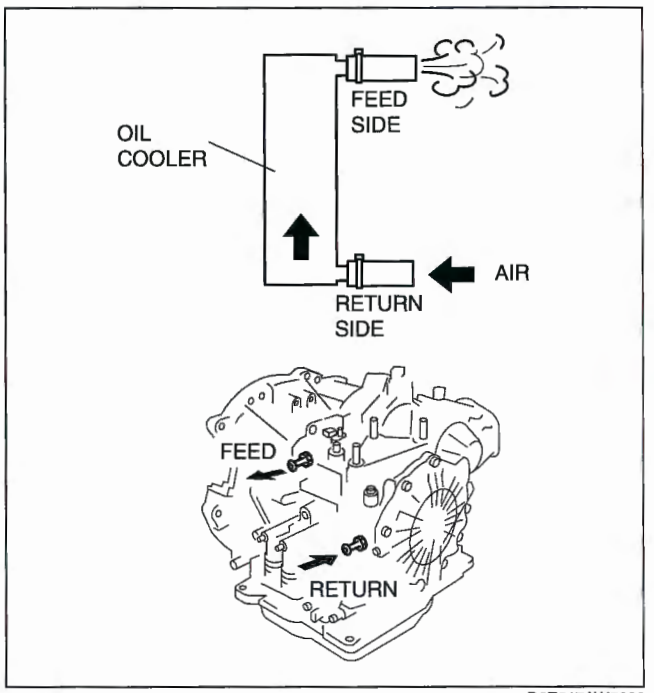

D6E517AW5026

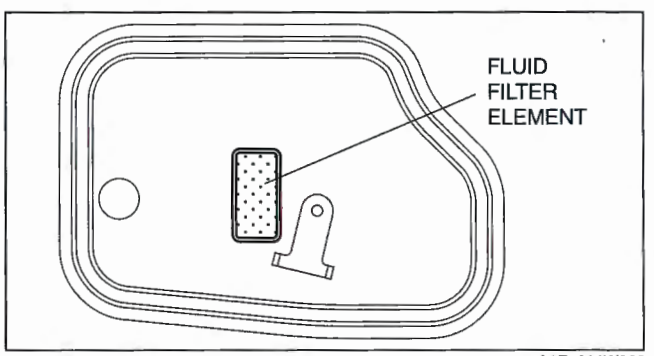

A6E5614W066

Power Flushing
Repair procedure
1. Before power flushing, inspect the hoses/lines and clamps. Power flushing must begin with back flushing followed by forward flushing to quickly dislodge the restriction. If back flushing is not performed before forward flushing, the restriction could further reduce the ATF flow through the internal mesh type baffle of the cooler and flushing will not be effective or possible.

Inspecting oil lines and clamps
1. Be sure to inspect the lines (hoses/pipes) for cuts, crimps (pinched), cracks or any other damage before reusing them.
   - If any problems exist, replace lines and clamps.

Caution
- **Always use new clamps when replacing hoses.**

Back flushing

1. Using the power flushing equipment manufacturer's instructions, connect equipment so the flushing fluid flows in the opposite direction of normal fluid flow.
2. Flush oil cooler/lines until discharge fluid is clean.

Caution

- **If the cooler can not be properly flushed using recommended equipment, send the radiator out for sublet cleaning or replace.**

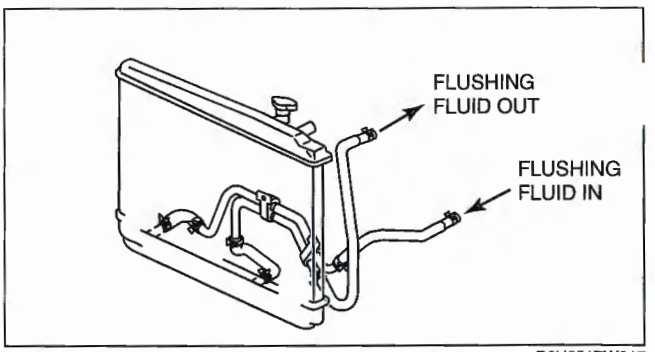

B6U0517W017

Forward flushing

1. Connect power flushing equipment so the flushing fluid flows in the direction of normal fluid flow.
2. Flush oil cooler/lines until discharge fluid is clean.

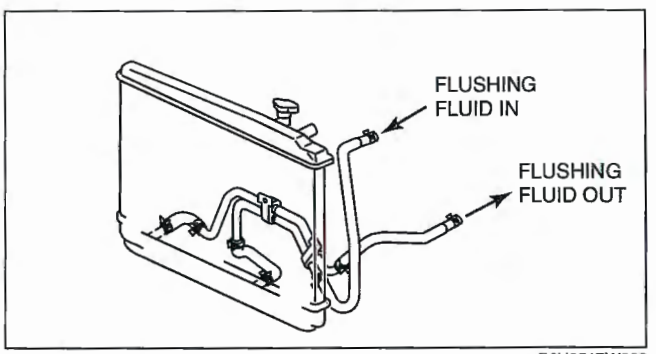

B6U0517W008

OIL COOLER REMOVAL/INSTALLATION [FS5A-EL]

E6U051719900W

1. Disconnect the negative battery cable.
2. Drain the ATF into a container. (See 05–17A–12 AUTOMATIC TRANSAXLE FLUID (ATF) REPLACEMENT [FS5A-EL].)
3. Remove the radiator. (See 01–12A–8 RADIATOR REMOVAL/INSTALLATION [L3, AJ].)
4. Remove in the order indicated in the table.
5. Install in the reverse order of removal.
6. Add ATF to the specified level. (See 05–17A–12 AUTOMATIC TRANSAXLE FLUID (ATF) REPLACEMENT [FS5A-EL].)
7. Connect the negative battery cable.
8. Inspect for oil leakage from the oil pipes and oil hoses.
9. Inspect for coolant from the hoses.
10. Inspect the ATF level and condition. (See 05–17A–10 AUTOMATIC TRANSAXLE FLUID (ATF) INSPECTION [FS5A-EL].)
11. Carry out the line pressure test. (See 05–17A–4 MECHANICAL SYSTEM TEST [FS5A-EL].)
12. Carry out the road test. (See 05–17A–7 ROAD TEST [FS5A-EL].)

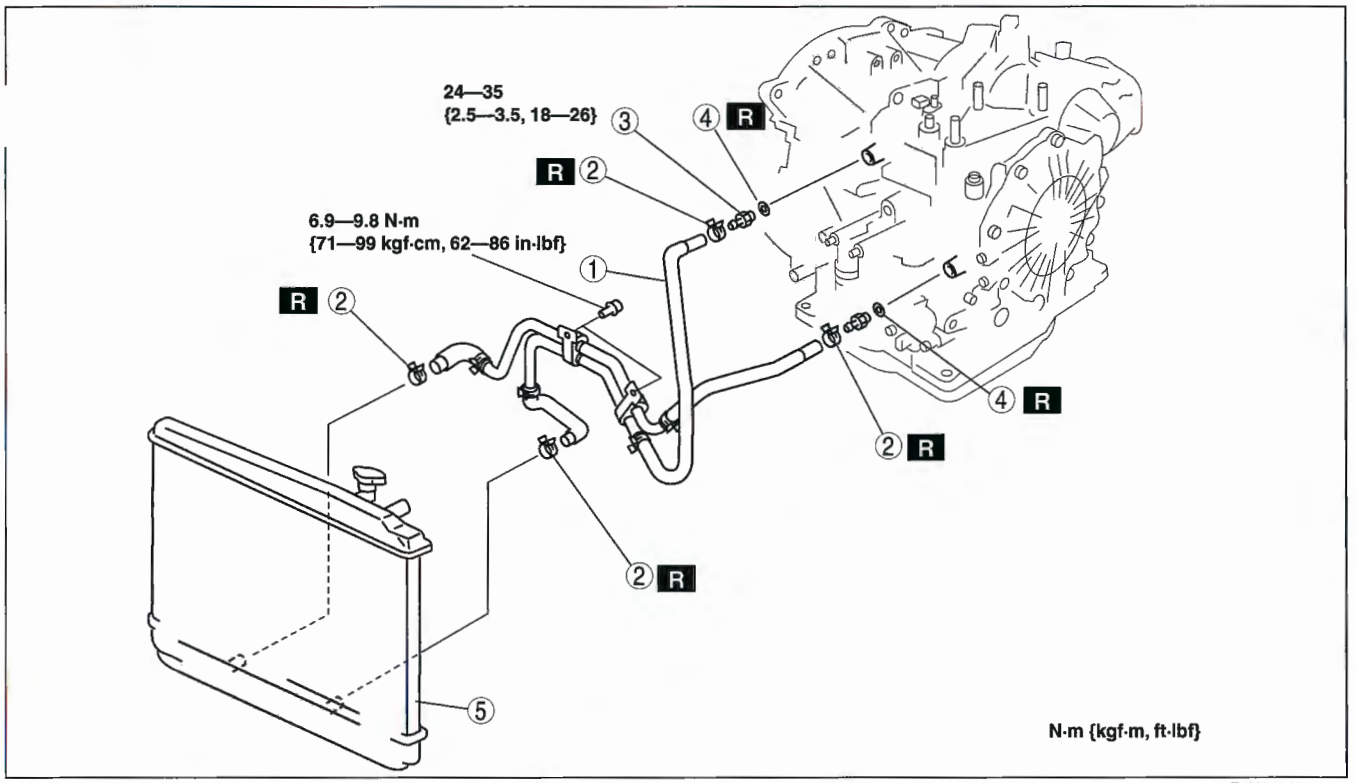

E6U517AW5004

1	Oil hose (See 05–17A–53 Oil Pipe, Hose Clamp, Oil Hose Installation Note.)
2	Hose clamp (See 05–17A–53 Oil Pipe, Hose Clamp, Oil Hose Installation Note.)
3	Connector bolt
4	O-ring
5	Radiator (in tank oil cooler) (See 05–17A–53 Radiator (In Tank Oil Cooler) Installation Note.)

Radiator (In Tank Oil Cooler) Installation Note

1. The automatic transaxle oil cooler flushing must be performed whenever a transaxle is removed for service because the existing fluid may be contaminated, and to prevent contamination of new fluid.

   Note
   - Flushing must be performed after installation of the overhauled or replaced transaxle.

2. Follow the instructions in the manufacturer's publication for flushing operation.

Oil Pipe, Hose Clamp, Oil Hose Installation Note

1. Apply compressed air to the cooler-side opening, and blow any remaining grime and foreign material from the cooler pipes. Compressed air should be applied for no **less than one minute**.

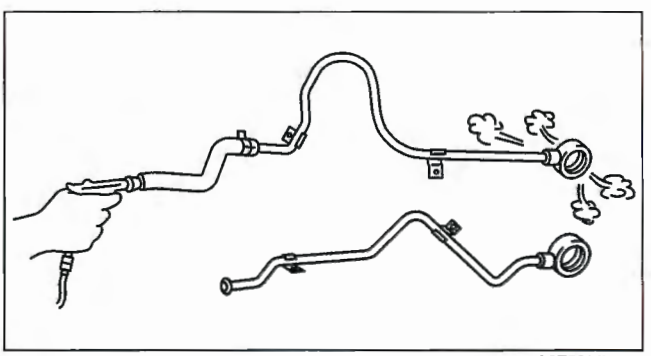

A6E5614W070

2. Align the marks, and slide the oil hose onto the oil pipe until it is fully seated as shown.

Note
- If reusing the hose, install the new hose clamp exactly on the mark left by the previous hose camp. Then apply force to the hose clamp in the direction of the arrow in order to fit the clamp in place.

3. Install the new hose clamp onto the hose.
4. Verify that the hose clamp does not interfere with any other components.

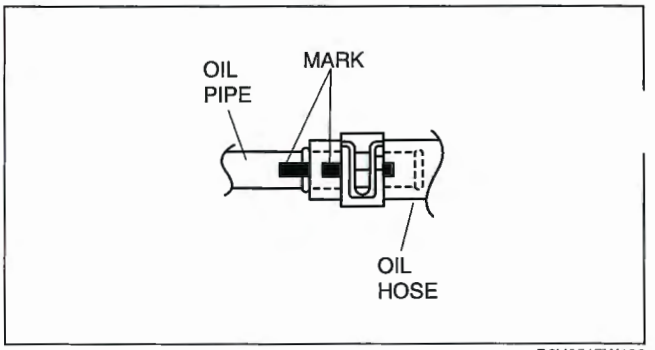

B6U0517W132

OIL COOLER DISASSEMBLY/ASSEMBLY [FS5A-EL]

E6U051719900W06

1. Disassemble in the order indicated in the table.
2. Assemble in the reverse order of disassembly.

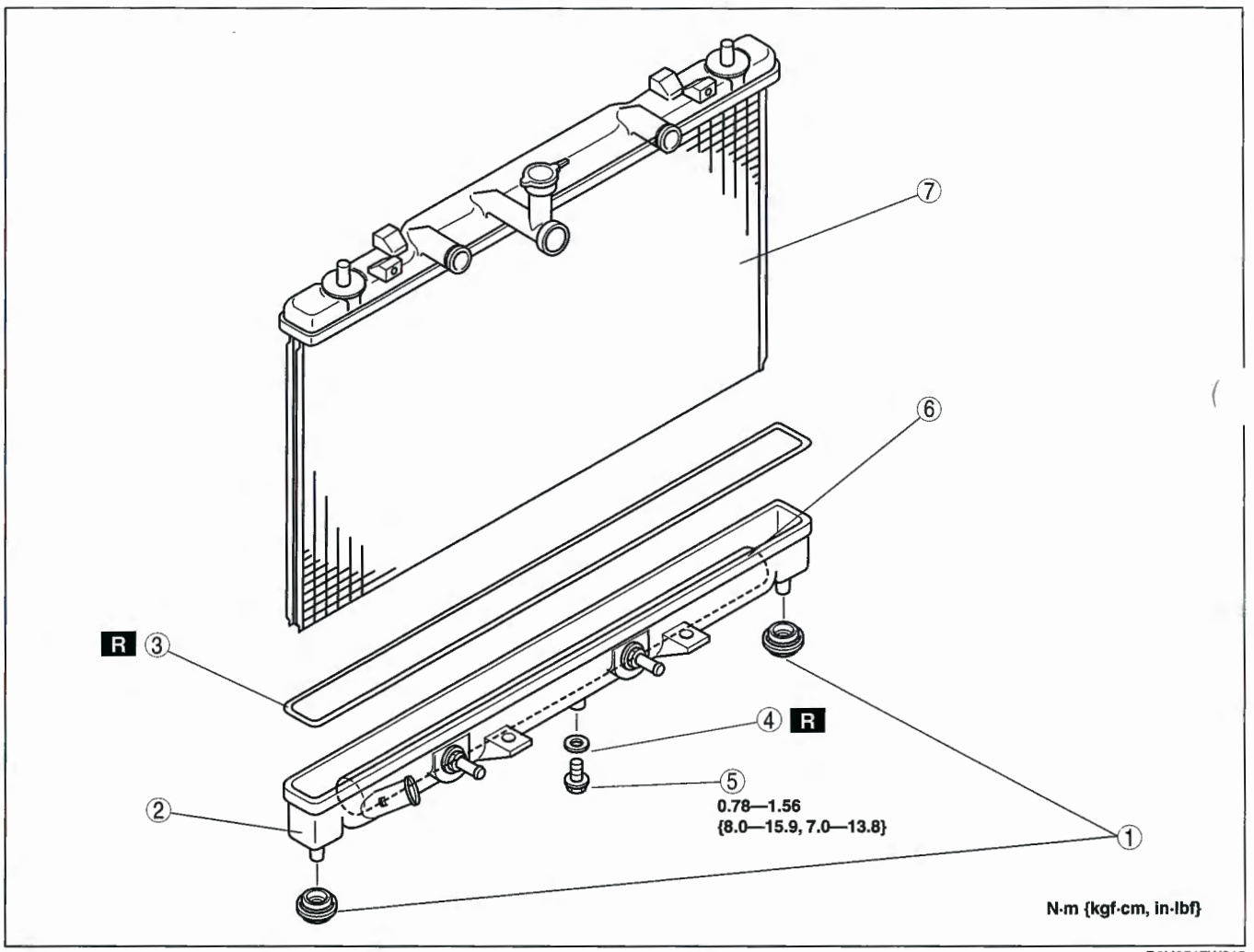

B6U0517W018

1	Mount rubber
2	Radiator outer tank (in tank oil cooler) (See 05–17A–55 Radiator Outer Tank (In Tank Oil Cooler) Removal Note.) (See 05–17A–55 Radiator Outer Tank (In Tank Oil Cooler) Installation Note.)
3	O-ring
4	Washer
5	Drain cock
6	ATF cooler
7	Radiator

Radiator Outer Tank (In Tank Oil Cooler) Removal Note

1. Inspect the height of the header tabs.
2. Insert the end of a medium tip screwdriver between the end of the header tab and the outer tank.

Note
- Do not open more tabs than necessary for tank removal.

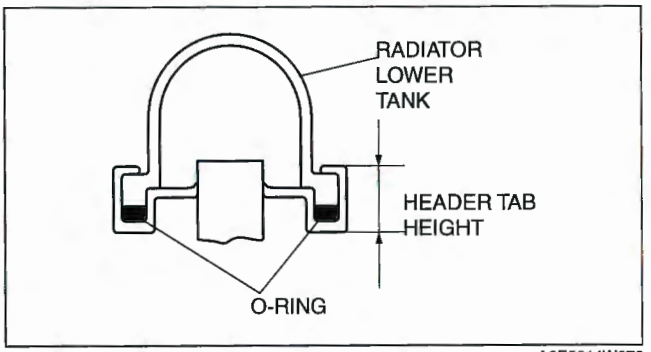

A6E5614W073

3. Pivot the screwdriver to pry the tab away from the tank and repeat the procedure for each tab.
4. Remove the radiator outer tank and O-ring (gasket) from the core header when all of the tabs are opened.

Note
- If any header tabs are missing from the core, replace the radiator.

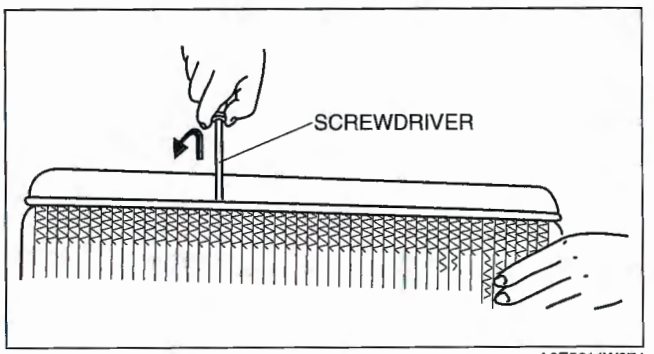

A6E5614W074

5. Inspect the gasket surface of the radiator core header to ensure it is clean and free of foreign material or damage.
6. Inspect the radiator outer tank for warping. If it is warped, replace radiator tank.

Radiator Outer Tank (In Tank Oil Cooler) Installation Note

Install a new O-ring and ensure it is not twisted. Position the radiator tank in the original direction to the core using care not to scratch the tank sealing surface with the header tabs.

Note
- Step 3 will set jaw opening to the correct specification.

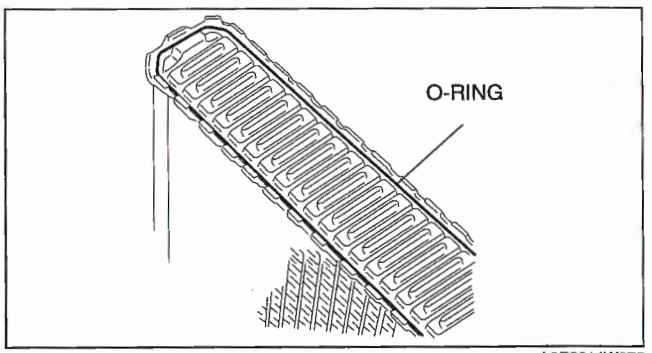

A6E5614W075

3. With the jaws of locking-type pliers (vise grips) closed and locked, turn the adjusting screw to position the jaws against the drill bit with the diameter measured (height) in the removal procedure 1. Tighten the lock nut on the adjusting screw against the handle to lock the adjustment in place.

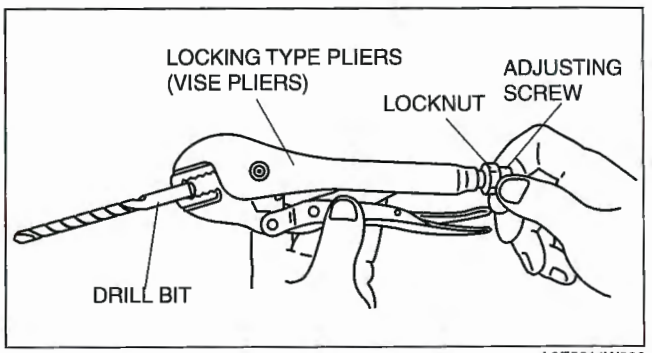

A6E5614W093

4. Squeeze the header tabs down in the order as shown against the lip of the radiator outer tank base with the locking-type pliers while rotating the pliers toward the tank.

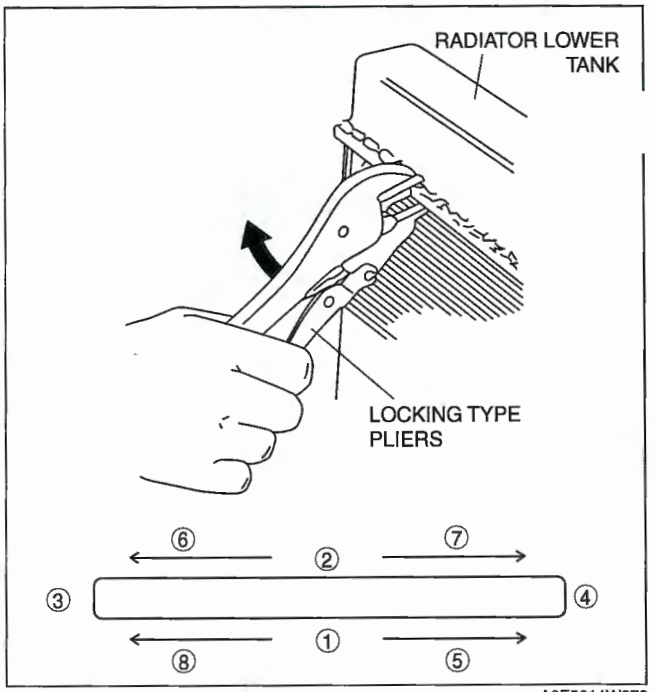

A6E5614W076

5. Verify that the height of the header tabs is same as the height before removal.
6. Inspect for leakage from radiator. (See 01–12A–7 ENGINE COOLANT LEAKAGE INSPECTION [L3, AJ].)

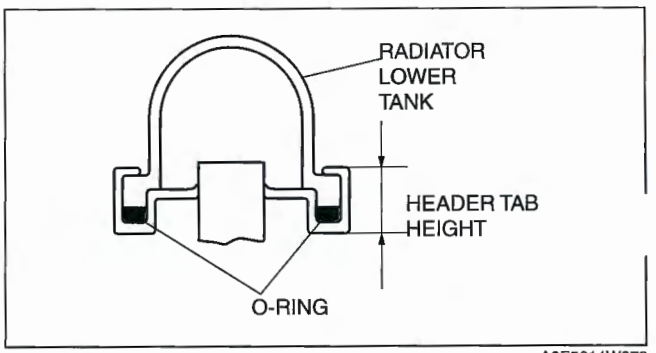

A6E5614W073

DRIVE PLATE REMOVAL/INSTALLATION [FS5A-EL]

E6U051719020W02

1. Remove the transaxle. (See 05–17A–39 AUTOMATIC TRANSAXLE REMOVAL/INSTALLATION [FS5A-EL].)
2. Remove in the order indicated in the figure.
3. Install in the reverse order of removal.

1	Drive plate mounting bolts (See 05–17A–57 Drive Plate Mounting Bolts Removal Note.)
2	Drive plate (See 05–17A–57 Drive Plate Installation Note.)

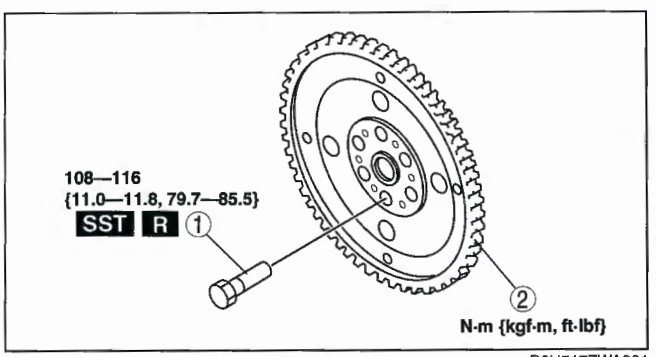

B6U517ZWA001

Drive Plate Mounting Bolts Removal Note

1. Set the **SST** or equivalent against the drive plate.
2. Remove the bolts and the drive plate.

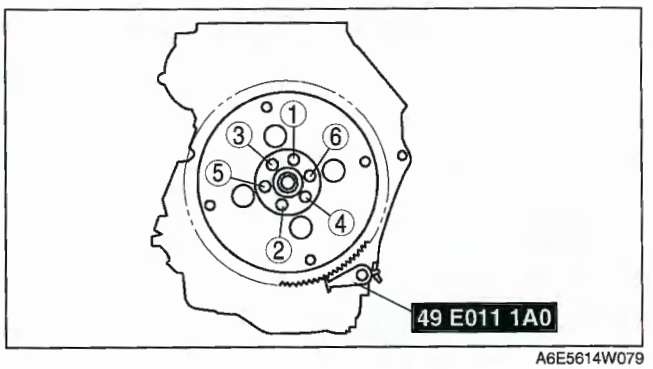

A6E5614W079

Drive Plate Installation Note

Caution

- **Clean the crankshaft threads before tightening the bolts.The threads may be damaged if the bolts are tightened with any old sealant remaining.**

1. Clean the crankshaft thread holes.
2. Install the drive plate.
3. Install the adapter.
4. Set the **SST** or equivalent against the drive plate.
5. Tighten the new drive plate mounting bolts in two or three steps in the order shown.

Tightening torque
108—116 N·m
{11.0—11.8 kgf·m, 79.7—85.5 ft·lbf}

. Install the transaxle. (See 05–17A–39 AUTOMATIC TRANSAXLE REMOVAL/ INSTALLATION [FS5A-EL].)

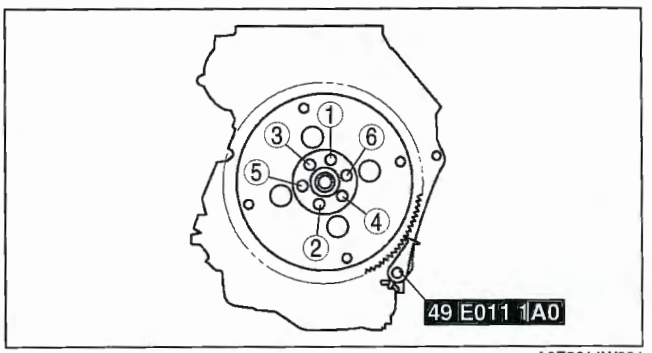

A6E5614W081

05–17B AUTOMATIC TRANSAXLE [AW6A-EL]

AUTOMATIC TRANSAXLE LOCATION INDEX [AW6A-EL] 05–17B–2
MECHANICAL SYSTEM TEST [AW6A-EL] 05–17B–3
Mechanical System Test Preparation .. 05–17B–3
Line Pressure Test 05–17B–4
Stall Test 05–17B–6
Time Lag Test 05–17B–7
ROAD TEST [AW6A-EL] 05–17B–7
Road Test Preparation 05–17B–7
Shift Diagram 05–17B–8
D Range Test 05–17B–8
M Range Test 05–17B–10
P Position Test 05–17B–11
AUTOMATIC TRANSAXLE FLUID (ATF) INSPECTION [AW6A-EL] 05–17B–11
Automatic Transaxle Fluid (ATF) Condition Inspection 05–17B–11
Automatic Transaxle Fluid (ATF) Level Inspection 05–17B–12
AUTOMATIC TRANSAXLE FLUID (ATF) REPLACEMENT [AW6A-EL] 05–17B–12
TRANSAXLE RANGE (TR) SWITCH INSPECTION [AW6A-EL] 05–17B–13
TRANSAXLE FLUID TEMPERATURE (TFT) SENSOR INSPECTION [AW6A-EL] 05–17B–13
On-Vehicle Inspection 05–17B–13
Off-Vehicle Inspection 05–17B–14
TRANSAXLE FLUID TEMPERATURE (TFT) SENSOR REMOVAL/INSTALLATION [AW6A-EL] 05–17B–15
INPUT/TURBINE SPEED SENSOR INSPECTION [AW6A-EL] 05–17B–16
On-Vehicle Inspection 05–17B–16
Off-Vehicle Inspection 05–17B–17
INPUT/TURBINE SPEED SENSOR REMOVAL/INSTALLATION [AW6A-EL] 05–17B–18
VEHICLE SPEED SENSOR (VSS) INSPECTION [AW6A-EL] 05–17B–19
On-Vehicle Inspection 05–17B–19
SOLENOID VALVE INSPECTION [AW6A-EL] 05–17B–20
Resistance Inspection (On-Vehicle Inspection) 05–17B–20
Continuity Inspection (On-Vehicle Inspection) 05–17B–20
TCM INSPECTION [AW6A-EL] 05–17B–21
TR Switch Operating Inspection 05–17B–21
Control Module Inspection 05–17B–21
TCM REMOVAL/INSTALLATION [AW6A-EL] 05–17B–25
Neutral Position Learning 05–17B–28
OIL SEAL (MANUAL SHAFT) REPLACEMENT [AW6A-EL] 05–17B–29
AUTOMATIC TRANSAXLE REMOVAL/INSTALLATION [AW6A-EL] 05–17B–30
No.4 Engine Mount Bracket Removal Note 05–17B–32
Torque Converter Nuts Removal Note 05–17B–34
Transaxle Removal Note 05–17B–34
Breather Hose Installation Note 05–17B–35
Transaxle Installation Note 05–17B–35
Torque Converter Nuts Installation Note 05–17B–35
No.4 Engine Mount Bracket Installation Note 05–17B–36
No.1 Engine Mount Installation Note ... 05–17B–36
Selector Cable Installation Note 05–17B–37
OIL SEAL (DIFFERENTIAL) REPLACEMENT [AW6A-EL] 05–17B–37
DIFFERENTIAL GEAR O-RING REPLACEMENT [AW6A-EL] 05–17B–38
CONTROL VALVE BODY REMOVAL/INSTALLATION [AW6A-EL] 05–17B–39
On-Vehicle Removal 05–17B–39
On-Vehicle Installation 05–17B–43
TORQUE CONVERTER REMOVAL/INSTALLATION [AW6A-EL] 05–17B–46
OIL SEAL (OIL PUMP) REPLACEMENT [AW6A-EL] 05–17B–47
OIL COOLER FLUSHING [AW6A-EL] ... 05–17B–48
Power Flushing 05–17B–48
OIL COOLER REMOVAL/INSTALLATION [AW6A-EL] 05–17B–49
Radiator (In Tank Oil Cooler) Installation Note 05–17B–50
Oil Pipe, Hose Clamp, Oil Hose Installation Note 05–17B–51
OIL COOLER DISASSEMBLY/ASSEMBLY [AW6A-EL] 05–17B–52
Radiator Outer Tank (In Tank Oil Cooler) Removal Note ... 05–17B–53
Radiator Outer Tank (In Tank Oil Cooler) Installation Note 05–17B–53
DRIVE PLATE REMOVAL/INSTALLATION [AW6A-EL] 05–17B–54
Drive Plate Mounting Bolts Removal Note 05–17B–55
Drive Plate Installation Note 05–17B–55

AUTOMATIC TRANSAXLE LOCATION INDEX [AW6A-EL]

E6U051700000W01

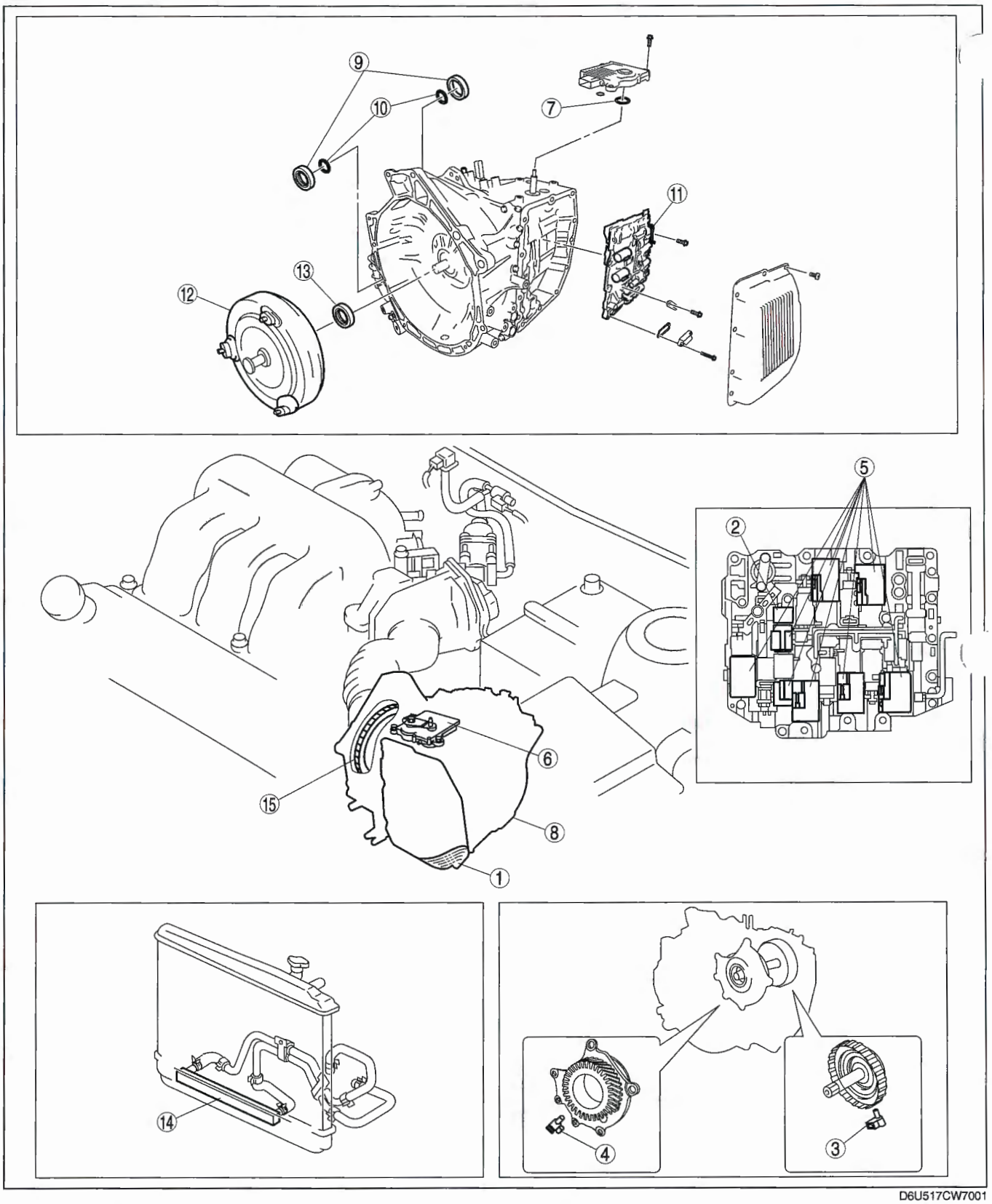

D6U517CW7001

1	Automatic transaxle fluid (ATF) (See 05–17B–11 AUTOMATIC TRANSAXLE FLUID (ATF) INSPECTION [AW6A-EL].) (See 05–17B–12 AUTOMATIC TRANSAXLE FLUID (ATF) REPLACEMENT [AW6A-EL].)

2	Transaxle fluid temperature (TFT) sensor (See 05–17B–13 TRANSAXLE FLUID TEMPERATURE (TFT) SENSOR INSPECTION [AW6A-EL].) (See 05–17B–15 TRANSAXLE FLUID TEMPERATURE (TFT) SENSOR REMOVAL/ INSTALLATION [AW6A-EL].)

3	Input/turbine speed sensor (See 05–17B–16 INPUT/TURBINE SPEED SENSOR INSPECTION [AW6A-EL].) (See 05–17B–18 INPUT/TURBINE SPEED SENSOR REMOVAL/INSTALLATION [AW6A-EL].)
4	Vehicle speed sensor (See 05–17B–19 VEHICLE SPEED SENSOR (VSS) INSPECTION [AW6A-EL].)
5	Solenoid valve (See 05–17B–20 SOLENOID VALVE INSPECTION [AW6A-EL].)
6	TCM (See 05–17B–13 TRANSAXLE RANGE (TR) SWITCH INSPECTION [AW6A-EL].) (See 05–17B–21 TCM INSPECTION [AW6A-EL].) (See 05–17B–25 TCM REMOVAL/INSTALLATION [AW6A-EL].)
7	Oil seal (manual shaft) (See 05–17B–29 OIL SEAL (MANUAL SHAFT) REPLACEMENT [AW6A-EL].)
8	Automatic transaxle (See 05–17B–30 AUTOMATIC TRANSAXLE REMOVAL/INSTALLATION [AW6A-EL].)
9	Oil seal (differential) (See 05–17B–37 OIL SEAL (DIFFERENTIAL) REPLACEMENT [AW6A-EL].)
10	Differential gear O-ring (See 05–17B–38 DIFFERENTIAL GEAR O-RING REPLACEMENT [AW6A-EL].)
11	Control valve body (See 05–17B–39 CONTROL VALVE BODY REMOVAL/INSTALLATION [AW6A-EL].)
12	Torque converter (See 05–17B–46 TORQUE CONVERTER REMOVAL/INSTALLATION [AW6A-EL].)
13	Oil seal (oil pump) (See 05–17B–47 OIL SEAL (OIL PUMP) REPLACEMENT [AW6A-EL].)
14	Oil cooler (See 05–17B–48 OIL COOLER FLUSHING [AW6A-EL].) (See 05–17B–49 OIL COOLER REMOVAL/INSTALLATION [AW6A-EL].) (See 05–17B–52 OIL COOLER DISASSEMBLY/ASSEMBLY [AW6A-EL].)
15	Drive plate (See 05–17B–54 DRIVE PLATE REMOVAL/INSTALLATION [AW6A-EL].)

MECHANICAL SYSTEM TEST [AW6A-EL]

E6U051700000W02

chanical System Test Preparation

1. Engage the parking brake and use wheel chocks at the front and rear of the wheels.
2. Inspect the engine coolant level. (See 01–12A–3 COOLING SYSTEM SERVICE WARNINGS [L3, AJ].) (See 01–12A–3 ENGINE COOLANT LEVEL INSPECTION [L3, AJ].)
3. Inspect the engine oil level. (See 01–11A–3 ENGINE OIL LEVEL INSPECTION [L3, AJ].)
4. Inspect the ATF level. (See 05–17B–12 Automatic Transaxle Fluid (ATF) Level Inspection.)
5. Inspect the idle speed. (See 01–10C–39 Idle Speed Inspection.)
6. Inspect the ignition timing. (See 01–10C–39 Ignition Timing Inspection.)

Line Pressure Test

1. Perform mechanical system test preparation. (See 05–17B–3 Mechanical System Test Preparation.)

Warning

- **Removing the test plug when the ATF is hot can be dangerous. Hot ATF can come out of the opening and badly burn you. Before removing the test plug, allow the ATF to cool.**

2. Connect the **SSTs** (49 HD64 406A and, 49 0378 400C) to the line pressure inspection port and replace the gauge of the **SST** (49 0378 400C) with the **SST** (49 B019 901B).

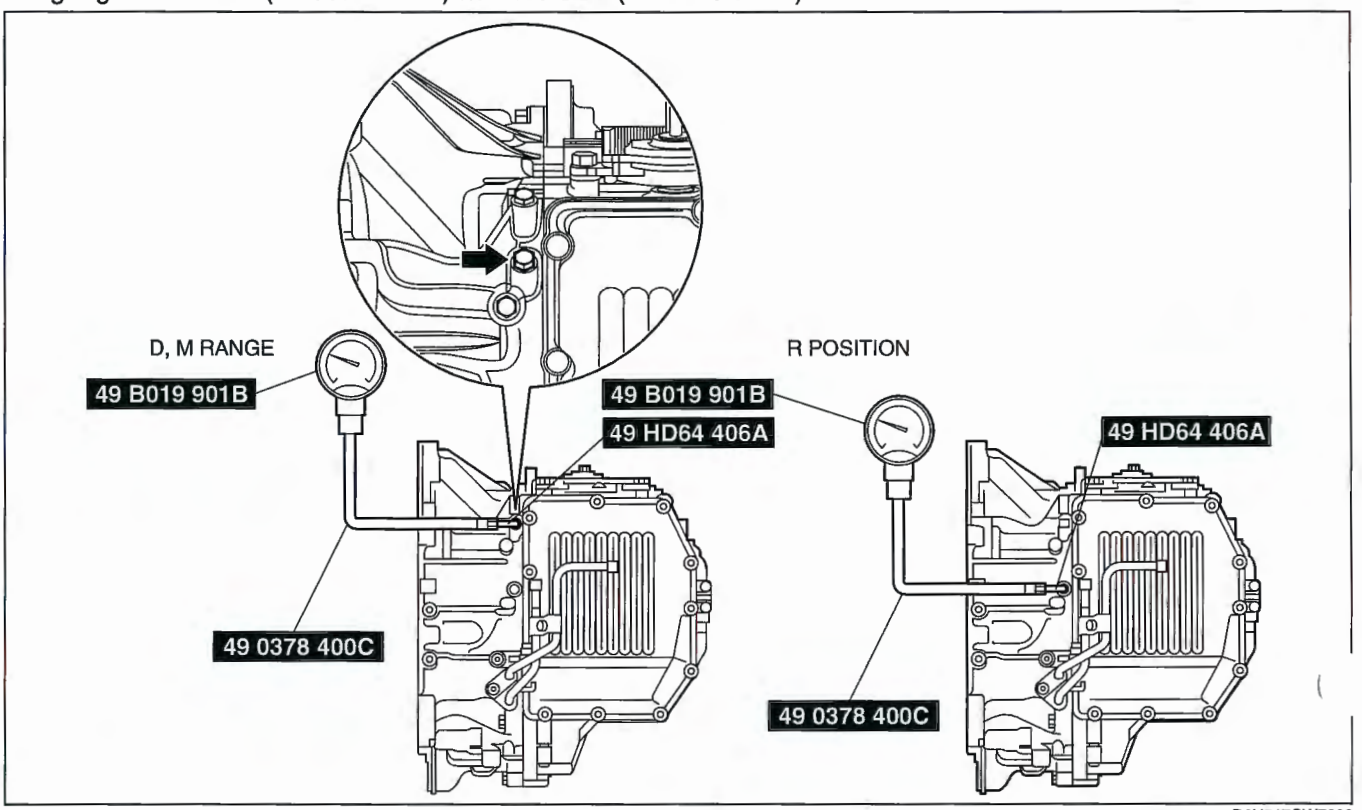

D6U517CW7002

3. Start the engine and warm it up until the ATF reaches **60—70 °C {140—158 °F}**.
4. Shift the selector lever to the D range.

Caution

- **Perform the test at least 3 times and calculate the average.**

5. Read the line pressure while the engine is idling for the D range.
6. Read the line pressure while the engine is idling for the R position and M range in the same manner as in Steps 4—5.

Line pressure

Position/range		Line pressure (kPa {kgf/cm^2, psi})
D, M	Idle	372—432 {3.8—4.4, 54—62}
R	Idle	580—670 {6.0—6.8, 85—97}

7. Stop the engine, then replace the **SST** (49 B019 901B) with the gauge of the **SST** (49 0378 400C).

8. Connect the WDS or equivalent to the DLC-2.
9. Measure the LPS PID value.
10. Start the engine.
    — Firmly depress the brake pedal with the left foot. Shift the selector lever to the D range.

Caution
- **If the accelerator pedal is pressed for more than 5 s while the brake pedal is pressed, the transaxle could be damaged. Therefore, perform Steps 11 and 12 within 5 s.**

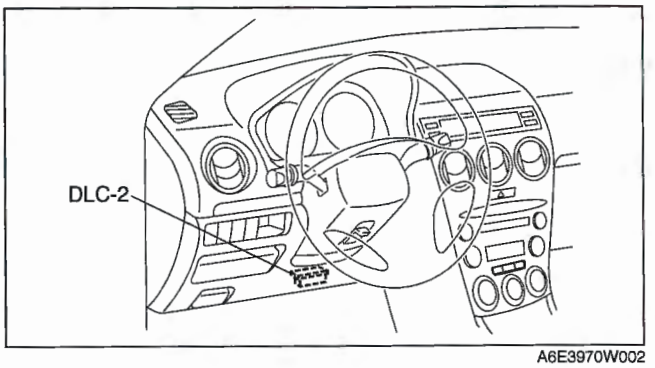

A6E3970W002

13. Gradually depress the accelerator pedal with the right foot.
14. When the engine speed no longer increases, quickly read the line pressure and release the accelerator pedal.
15. Shift the selector lever to the N position and idle the engine for **1 min or more** to cool the ATF.
16. Verify that the line pressure and LPS PID current values change according to the following graph by changing the shift throttle opening angle when shifting to the D range and R position with the engine running.
    — The line pressure standard other than when the engine is idling cannot be determined because the maximum line pressure for this automatic transaxle is controlled by vehicle conditions.

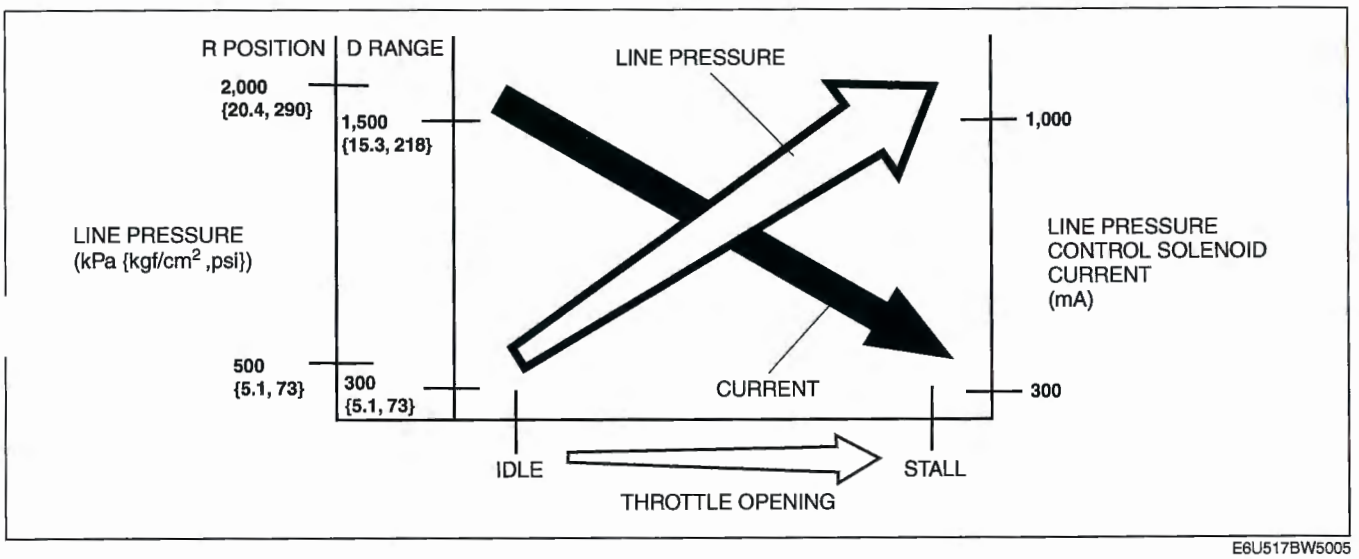

E6U517BW5005

Warning
- **Removing the SST when the ATF is hot can be dangerous. Hot ATF can come out of the opening and badly burn you. Before removing the SST, allow the ATF to cool.**

17. Remove the **SSTs**.
18. Install a test plug in the inspection port.

Tightening torque
5.9—8.8 N·m {61—89 kgf·cm, 53—77 in·lbf}

Line pressure test evaluation

Condition	Possible cause
Lower than specification in D range and R position	• Line pressure control solenoid malfunction • Primary regulator valve malfunction • Oil pump malfunction • Oil leaking from D range or R position hydraulic circuit
Constant pressure without fluctuation in hydraulic pressure to throttle in D range and R position	• Line pressure control solenoid malfunction • Control valve body internal malfunction
Current to throttle does not change in D range and R position	• TCM internal malfunction • Connector malfunction
Hydraulic pressure in R position is not higher than D range	• Primary regulator valve malfunction

Stall Test

1. Perform mechanical system test preparation. (See 05–17B–3 Mechanical System Test Preparation.)
2. Start the engine.
3. Firmly depress the brake pedal with the left foot.
4. Shift the selector lever to the D range.

Caution

- **If the accelerator pedal is depressed for more than 5 s while the brake pedal is depressed, the transaxle could be damaged. Therefore, perform Steps 5 and 6 within 5 s.**
- **Perform the test at least 3 times and calculate the average.**

5. Gently depress the accelerator pedal with the right foot.
6. When the engine speed no longer increases, quickly read the engine speed and release the accelerator pedal.
7. Shift the selector lever to the N position and idle the engine for **1 min or more** to cool the ATF.
8. Perform a stall test of the M range and R position in the same manner as in Steps 3—7.
9. Turn off the engine.

Engine stall speed

Position/range	Engine stall speed (rpm)
D, M	2,480
R	

Evaluation of stall test

Condition		Possible cause
Above specification	In D, M ranges	• Low line pressure (Line pressure control solenoid malfunction, primary regulator valve malfunction) • Control valve body component malfunction (shift solenoid C hydraulic pressure system) • C1 clutch slipping • One-way clutch malfunction
	In R position	• Low line pressure (Line pressure control solenoid malfunction, primary regulator valve malfunction) • Control valve body component malfunction (shift solenoid E hydraulic pressure system) • C3 clutch malfunction (slipping) • B2 brake malfunction (slipping)
	In all positions/ranges	• Low line pressure (Line pressure control solenoid malfunction, primary regulator valve malfunction) • Oil pump malfunction • Oil strainer clogging
Below specification		• Engine lack of power • Torque converter one-way clutch slipping

Time Lag Test

1. Perform mechanical system test preparation. (See 05–17B–3 Mechanical System Test Preparation.)
2. Start the engine.
   Warm up the engine until the ATF temperature reaches **60—70°C {140—158°F}**.
   Shift the selector lever from the N position to D range.
5. Use a stopwatch to measure the time it takes from shifting until shock is felt. Take three measurements for each test and average from the results using the following formula.

   Formula
   Average time lag = (Time 1 + Time 2 + Time 3) / 3

6. Perform the test for the following shifts in the same manner as in Step 5.
   - N position → R position

   Average time lag
   N position → D range: 1 s or less
   N position → R position: 1.5 s or less

Evaluation of time lag test

Condition		Possible cause
N→D shift	More than specification	• Control valve body malfunction (shift solenoid C hydraulic pressure system) • C1 clutch slipping • One-way clutch malfunction • Oil pump malfunction • Oil strainer clogging
N→R shift	More than specification	• Control valve body malfunction (shift solenoid E hydraulic pressure system) • C3 clutch slipping • B2 brake slipping • Oil pump malfunction • Oil strainer clogging

ROAD TEST [AW6A-EL]

E6U051700000W03

Warning

- **When performing a road test, be aware of other vehicles, people, and other impediments to order to avoid an accident.**

Note

- When the legal speed limit must be exceeded, use a chassis dynamometer instead of performing a road test.

Road Test Preparation

1. Inspect the engine coolant level. (See 01–12A–3 COOLING SYSTEM SERVICE WARNINGS [L3, AJ].) (See 01–12A–3 ENGINE COOLANT LEVEL INSPECTION [L3, AJ].)
2. Inspect the engine oil level. (See 01–11A–3 ENGINE OIL LEVEL INSPECTION [L3, AJ].)
3. Inspect the ATF level. (See 05–17B–12 Automatic Transaxle Fluid (ATF) Level Inspection.)
4. Inspect the idle speed. (See 01–10C–39 Idle Speed Inspection.)
5. Inspect the ignition timing. (See 01–10C–39 Ignition Timing Inspection.)
6. Bring up the engine and transaxle to normal operating temperature.

Shift Diagram
D range (normal mode)

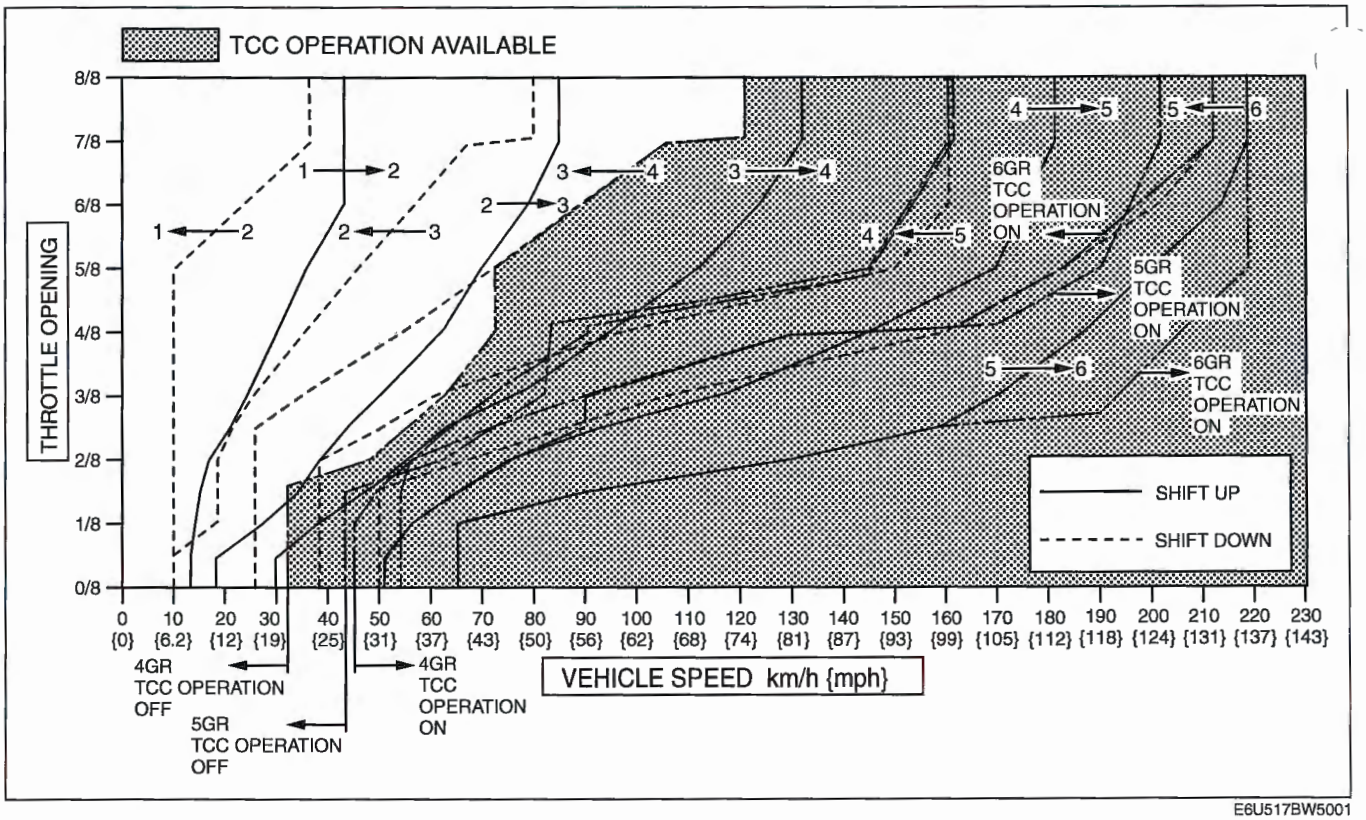

E6U517BW5001

D Range Test

1. Perform road test preparation. (See 05–17B–7 Road Test Preparation.)
2. Shift the selector lever to D range.
3. Accelerate with the depressing amount of accelerator pedal half and then fully depress.
4. Verify that 1→2, 2→3, 3→4, 4→5, and 5→6 upshifts and downshifts are obtained. The shift points must be as shown in the table below.
   - If there is any malfunction, inspect the TCM and ATX. (See 05–03B–4 SYMPTOM TROUBLESHOOTING ITEM TABLE [AW6A-EL].)
5. Drive the vehicle in 6GR, 5GR, 4GR, 3GR, and 2GR and verify that kickdown occurs for 6→5, 5→4, 4→3, 3→2, 2→1 downshifts, and that the shift points are as shown in the table below.
   - If there is any malfunction, inspect the TCM and ATX. (See 05–03B–4 SYMPTOM TROUBLESHOOTING ITEM TABLE [AW6A-EL].)
6. Drive the vehicle and verify that TCC operation is obtained. The operation points must be as shown in the table below.
   - If there is any malfunction, inspect the TCM and ATX. (See 05–03B–4 SYMPTOM TROUBLESHOOTING ITEM TABLE [AW6A-EL].)

Vehicle speed at shift point table

Range	Mode	Throttle condition	Shift	Vehicle speed (km/h {mph})	Turbine speed (rpm)
D	NORMAL	Wide open throttle	$D_1 \rightarrow D_2$	42—48 {27—29}	5,150—5,850
			$D_2 \rightarrow D_3$	83—91 {52—56}	5,850—6,350
			$D_3 \rightarrow D_4$	129—139 {80—86}	5,950—6,350
			TCC ON (D_4)	159—169 {99—104}	5,450—5,750
			$D_4 \rightarrow D_5$	177—187 {110—115}	6,050—6,350
			TCC ON (D_5)	197—207 {123—128}	5,000—5,250
			$D_5 \rightarrow D_6$	214—224 {133—138}	5,450—5,650
			TCC ON (D_6)	214—224 {133—138}	4,350—4,500
		Half throttle	$D_1 \rightarrow D_2$	27—34 {17—21}	3,250—4,250
			$D_2 \rightarrow D_3$	52—68 {33—42}	3,650—4,750
			$D_3 \rightarrow D_4$	82—107 {51—66}	3,750—4,900
			TCC ON (D_4)	90—126 {56—78}	3,100—4,300
			$D_4 \rightarrow D_5$	130—154 {81—95}	4,450—5,250
			TCC ON (D_5)	123—157 {77—97}	3,150—3,950
			$D_5 \rightarrow D_6$	177—193 {110—119}	4,500—4,900
			TCC ON (D_6)	200—215 {124—133}	4,050—4,350
		Closed throttle position	$D_6 \rightarrow D_5$	47—53 {30—32}	1,000—1,050
			$D_5 \rightarrow D_4$	35—41 {22—25}	900—1,000
			$D_4 \rightarrow D_3$	24—30 {15—18}	850—1,000
			$D_3 \rightarrow D_2$	7—13 {5—8}	350—550
			$D_3 \rightarrow D_1$	7—13 {5—8}	350—550
		Kickdown	$D_6 \rightarrow D_5$	207—217 {129—134}	4,200—4,350
			$D_5 \rightarrow D_4$	156—166 {97—102}	4,000—4,200
			$D_4 \rightarrow D_3$	116—126 {72—78}	4,000—4,250
			$D_3 \rightarrow D_2$	76—84 {48—52}	3,500—3,850
			$D_2 \rightarrow D_1$	33—39 {21—24}	2,350—2,700

Range	Mode	Throttle condition	Shift	Vehicle speed (km/h {mph})	Turbine speed (rpm)
D	POWER	Wide open throttle	$D_1 \rightarrow D_2$	42—48 {27—29}	5,150—5,850
			$D_2 \rightarrow D_3$	83—91 {52—56}	5,850—6,350
			$D_3 \rightarrow D_4$	129—139 {80—86}	5,950—6,350
			TCC ON (D_4)	159—169 {99—104}	5,450—5,750
			$D_4 \rightarrow D_5$	177—187 {110—115}	6,050—6,350
			TCC ON (D_5)	197—207 {123—128}	5,000—5,250
			TCC ON (D_6)	214—224 {133—138}	4,350—4,500
		Half throttle	$D_1 \rightarrow D_2$	28—36 {18—22}	3,350—4,500
			$D_2 \rightarrow D_3$	53—69 {33—42}	3,700—4,850
			$D_3 \rightarrow D_4$	86—112 {54—69}	3,950—5,150
			TCC ON (D_4)	97—130 {61—80}	3,300—4,400
			$D_4 \rightarrow D_5$	177—187 {110—115}	6,050—6,350
			TCC ON (D_5)	145—170 {90—105}	3,700—4,300
			TCC ON (D_6)	200—215 {124—133}	4,050—4,350
		Closed throttle position	$D_6 \rightarrow D_5$	47—53 {30—32}	1,000—1,050
			$D_5 \rightarrow D_4$	35—41 {22—25}	900—1,000
			$D_4 \rightarrow D_3$	24—30 {15—18}	850—1,000
			$D_3 \rightarrow D_2$	7—13 {5—8}	350—550
			$D_3 \rightarrow D_1$	7—13 {5—8}	350—550
		Kickdown	$D_6 \rightarrow D_5$	207—217 {129—134}	4,200—4,350
			$D_5 \rightarrow D_4$	156—166 {97—102}	4,000—4,200
			$D_4 \rightarrow D_3$	116—126 {72—78}	4,000—4,250
			$D_3 \rightarrow D_2$	76—84 {48—52}	3,500—3,850
			$D_2 \rightarrow D_1$	33—39 {21—24}	2,350—2,700

M Range Test

1. Perform road test preparation. (See 05–17B–7 Road Test Preparation.)
2. Shift the selector lever to M range.
3. Verify that 1→2, 2→3, 3→4, 4→5 and 5→6 upshifts and 6→5, 5→4, 4→3, 3→2, and 2→1 downshifts are obtained by manual shifting of the selector lever forward and back.
   - If there is any malfunction, inspect the TCM and ATX. (See 05–03B–4 SYMPTOM TROUBLESHOOTING ITEM TABLE [AW6A-EL].)
4. Decelerate the vehicle and verify that 6→5, 5→4, 4→3, 3→1 downshifts are obtained. The shift points must be as shown in the table below.
   - If there is any malfunction, inspect the TCM and ATX. (See 05–03B–4 SYMPTOM TROUBLESHOOTING ITEM TABLE [AW6A-EL].)
5. Decelerate the vehicle and verify that engine braking effect is felt in 1GR.
   - If there is any malfunction, inspect the TCM and ATX. (See 05–03B–4 SYMPTOM TROUBLESHOOTING ITEM TABLE [AW6A-EL].)
6. Drive the vehicle and verify that TCC operation is obtained in 4GR, 5GR and 6GR. The operation points must be as shown in the table below.
   - If there is any malfunction, inspect the TCM and ATX. (See 05–03B–4 SYMPTOM TROUBLESHOOTING ITEM TABLE [AW6A-EL].)
7. Drive the vehicle in 6GR, 5GR, 4GR and 3GR and verify that kickdown occurs for 6→5, 5→4, 4→3, 3→2 downshifts, and that the shift points are as shown in the table below.
   - If there is any malfunction, inspect the TCM and ATX. (See 05–03B–4 SYMPTOM TROUBLESHOOTING ITEM TABLE [AW6A-EL].)

Vehicle speed at shift point table

Range	Mode	Throttle condition	Shift	Vehicle speed km/h {mph}	Turbine speed (rpm)
M	Manual	Half throttle	TCC ON (M_4)	97—136 {61—84}	3,300—4,650
			TCC ON (M_5)	138—166 {86—102}	3,500—4,200
			TCC ON (M_6)	200—215 {124—133}	4,050—4,350
		All round	$M_6 \rightarrow M_5$	47—53 {30—32}	1,000—1,050
			$M_5 \rightarrow M_4$	35—41 {22—25}	900—1,000
			$M_4 \rightarrow M_3$	24—30 {15—18}	850—1,000
			$M_3 \rightarrow M_1$	7—13 {5—8}	350—550
		Kickdown	$M_6 \rightarrow M_5$	207—217 {129—134}	4,200—4,350
			$M_5 \rightarrow M_4$	156—166 {97—102}	4,000—4,200
			$M_4 \rightarrow M_3$	65—75 {41—46}	2,250—2,550
			$M_3 \rightarrow M_2$	42—50 {27—31}	1,950—2,250

P Position Test

1. Shift into P position on a gentle slope. Release the brake and verify that the vehicle does not roll.
   - If there is any malfunction, inspect the ATX. (See 05-03B-4 SYMPTOM TROUBLESHOOTING ITEM TABLE [AW6A-EL].)

AUTOMATIC TRANSAXLE FLUID (ATF) INSPECTION [AW6A-EL]

E6U051719001W01

Automatic Transaxle Fluid (ATF) Condition Inspection

1. Inspect the ATF for the following to determine whether the transaxle should be disassembled.
   - The ATF is muddy.
   - The ATF smells strange or unusual.

ATF Condition

Condition			Possible cause
?ar dark red		Normal	—
Light red (pink)		Contaminated with water	• Damaged oil cooler • Poor filler tube installation: Problem could occur to parts inside the transaxle due to water contamination. If necessary, replace the transaxle.
Reddish brown	Has burnt smell and metal particles are found	Deteriorated ATF	Defective powertrain components inside the transaxle: Particles cause wide range of problems by clogging the oil pipe, control valve body and oil cooler. • A large amount of metal particles are found. If necessary, replace the transaxle. • Flush the system due to possible clogging of the oil pipe or oil cooler.
	Has no burnt smell	Normal	• Discoloration by oxidation

Automatic Transaxle Fluid (ATF) Level Inspection

Caution
- **The ATF amount varies according to ATF temperature. Therefore, when checking the ATF level or replacing the ATF, use a thermometer to measure the temperature and adjust the ATF amount to the specified level according to the specified temperature.**

1. Place the vehicle on level ground.
2. Apply the parking brake and position wheel chocks securely to prevent the vehicle from rolling.
3. Adjust the length or thermometer probe so that the length is the same as the depth gauge, and hold the probe with a paper holder. Insert into the filler tube and measure the temperature.
   - If necessary, inspect the ATF before warming up the engine. In this case, use the ATF temperature **(15—25 °C {59—77 °F})**.
4. Warm up the engine until the ATF reaches **60—70 °C {140—158 °F}**.
5. Shift the selector lever and pause momentarily in each range (P—D) while depressing the brake pedal.
6. Shift the selector lever to P position.
7. Verify that the ATF level is in the HOT range **(65 °C {149 °F})** while the engine is idling.
   - If necessary, add ATF to the specification.

ATF
Type: JWS3309

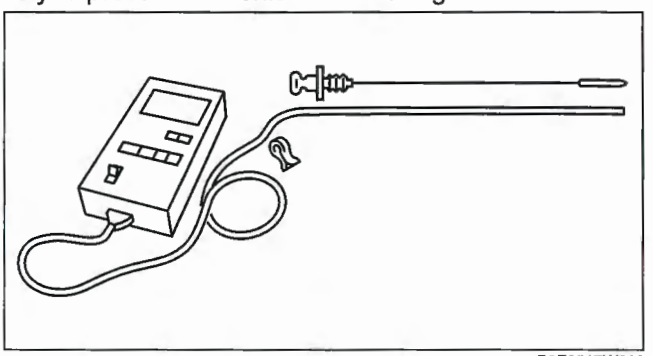

B3E0517W083

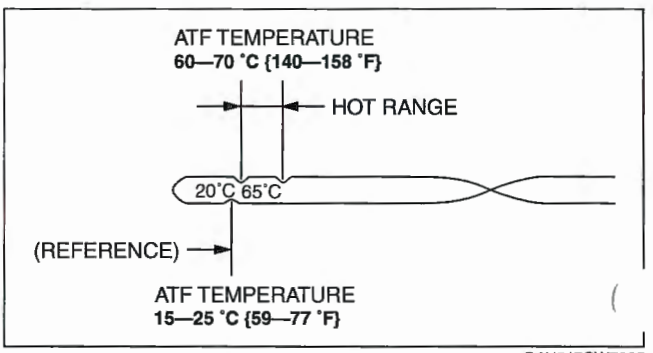

D6U517CW7005

AUTOMATIC TRANSAXLE FLUID (ATF) REPLACEMENT [AW6A-EL]

E6U051719001W02

Warning
- **A hot transaxle and ATF can cause severe burns. Turn off the engine and wait until they are cool before replacing the ATF.**

1. Disconnect the negative battery cable.
2. Remove the oil dipstick.
3. Remove the air cleaner component. (See 01–13C–2 INTAKE AIR SYSTEM REMOVAL/INSTALLATION [AJ].)
4. Remove the oil filler plug and O-ring.
5. Remove the under cover.

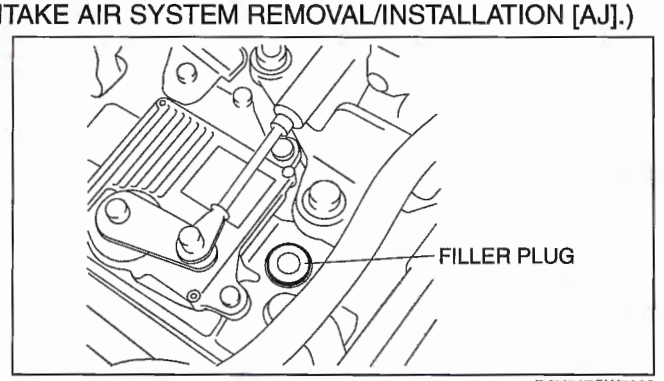

D6U517CW7082

6. Remove the oil drain plug and gasket.
7. Drain the ATF into a container.
8. Install a new gasket and the drain plug.

Tightening torque
23.5—54.9 N·m {2.4—5.5 kgf·m, 17.4—40.4 ft·lbf}

9. Add the specified ATF through the oil filler plug until it reaches the lower notch of dipstick.

ATF
Type: JWS3309
Capacity (Approx. quantity): 7.0 L {7.4 US qt, 6.2 Imp qt}

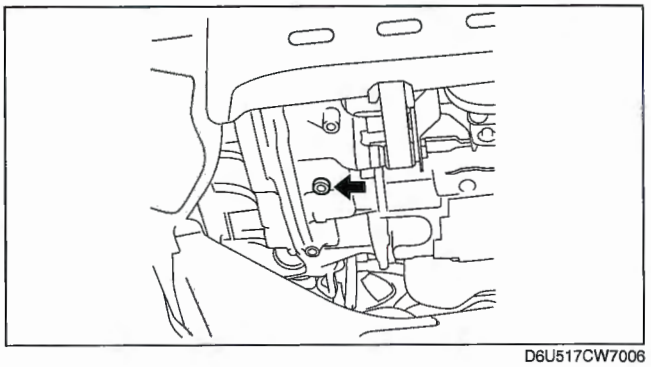
D6U517CW7006

10. Install a new O-ring and the filler plug.

Tightening torque
23.5—54.9 N·m {2.4—5.5 kgf·m, 17.4—40.4 ft·lbf}

11. Install the under cover.
12. Install the air cleaner component. (See 01–13C–2 INTAKE AIR SYSTEM REMOVAL/INSTALLATION [AJ].)
13. Connect the negative battery cable.
14. Ensure that the ATF level is in the HOT range (**65 °C {149 °F}**).
    - Add ATF to the specified level as necessary.

TRANSAXLE RANGE (TR) SWITCH INSPECTION [AW6A-EL]

E6U051719200W01

Note
- TR switch function is installed as one part of TCM.

... Inspect the TCM. (See 05–17B–21 TCM INSPECTION [AW6A-EL].)

TRANSAXLE FLUID TEMPERATURE (TFT) SENSOR INSPECTION [AW6A-EL]

E6U051719200W02

On-Vehicle Inspection

Caution
- **Water or foreign material entering the connector can cause a poor connection or corrosion. Be sure not to allow water or foreign material on the connector when disconnecting.**
- **Do not damage the terminals.**

1. Disconnect the negative battery cable.
2. Remove the air cleaner component. (See 01–13C–2 INTAKE AIR SYSTEM REMOVAL/INSTALLATION [AJ].)
3. Remove the TCM. (See 05–17B–25 TCM REMOVAL/INSTALLATION [AW6A-EL].)
4. Verify that there is no continuity between coupler component terminals B7 and GND, or B8 and GND.
   - If there is any malfunction, perform an off-vehicle inspection of TFT sensor. (See 05–17B–14 Off-Vehicle Inspection.)
5. Install the TCM. (See 05–17B–25 TCM REMOVAL/INSTALLATION [AW6A-EL].)
6. Install the air cleaner component. (See 01–13C–2 INTAKE AIR SYSTEM REMOVAL/INSTALLATION [AJ].)
7. Connect the negative battery cable.

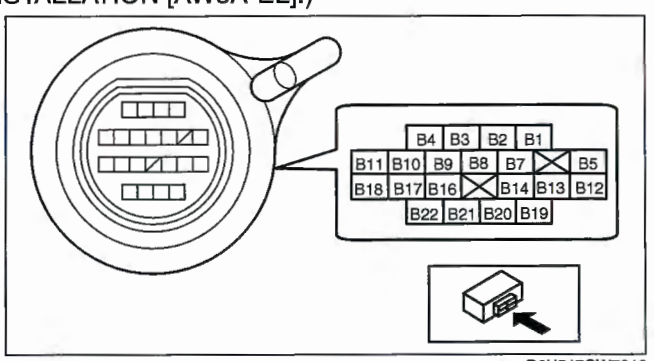

D6U517CW7016

Off-Vehicle Inspection

Warning

- **A hot transaxle and ATF can cause severe burns. Turn off the engine and wait until they are cool before replacing the ATF.**

Caution

- **Water or foreign material entering the connector can cause a poor connection or corrosion. Be sure not to allow water or foreign material on the connector when disconnecting.**
- **Do not damage the terminals.**

1. Disconnect the negative battery cable.
2. Remove the air cleaner component and air cleaner bracket. (See 01–13C–2 INTAKE AIR SYSTEM REMOVAL/INSTALLATION [AJ].)
3. Place the heater pipe out of the way.
4. Remove the under cover.
5. Drain the ATF. (See 05–17B–12 AUTOMATIC TRANSAXLE FLUID (ATF) REPLACEMENT [AW6A-EL].)
6. Drain the engine coolant. (See 01–12A–5 ENGINE COOLANT REPLACEMENT [L3, AJ].)
7. Disconnect the lower radiator hose and place the lower radiator hose out of the way.
8. Remove the oil hose, oil pipe and O-ring. (See 05–17B–49 OIL COOLER REMOVAL/INSTALLATION [AW6A-EL].)
9. Remove the front crossmember. (See 02–13–20 FRONT CROSSMEMBER REMOVAL/INSTALLATION.)
10. Remove the control valve body. (See 05–17B–39 On-Vehicle Removal.)
11. Remove the TFT sensor. (See 05–17B–15 TRANSAXLE FLUID TEMPERATURE (TFT) SENSOR REMOVAL/INSTALLATION [AW6A-EL].)
12. Place the TFT sensor and a thermometer in ATF as shown in the figure, and heat the ATF gradually.
13. Measure the resistance between the coupler component terminals B7and B8.
    - If there is any malfunction, replace the TFT sensor. (See 05–17B–15 TRANSAXLE FLUID TEMPERATURE (TFT) SENSOR REMOVAL/INSTALLATION [AW6A-EL].)

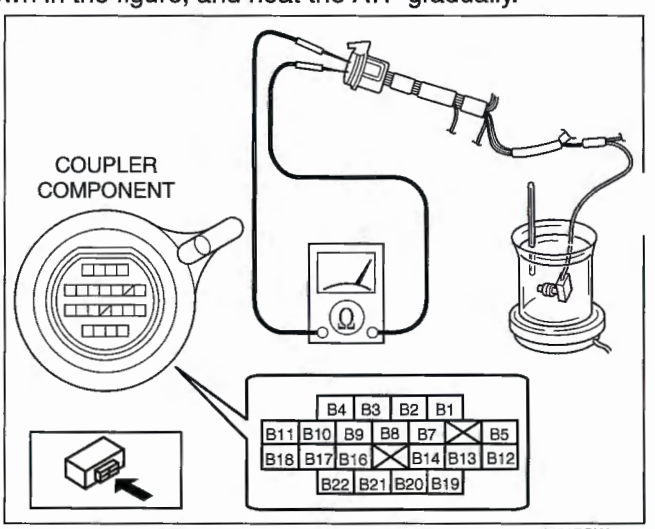

D6U517CW7020

Transaxle fluid temperature (TFT) sensor

ATF temperature (°C {°F})	Resistance (kilohm)
10 {50}	5.62—7.31
25 {77}	3.5
110 {230}	0.22—0.27

14. Install the TFT sensor. (See 05–17B–15 TRANSAXLE FLUID TEMPERATURE (TFT) SENSOR REMOVAL/INSTALLATION [AW6A-EL].)
15. Install the control valve body. (See 05–17B–43 On-Vehicle Installation.)
16. Apply ATF to a new O-ring and install it on the oil pipe.
17. Install the oil pipe and oil hose. (See 05–17B–49 OIL COOLER REMOVAL/INSTALLATION [AW6A-EL].)
18. Connect the lower radiator hose.
19. Add the engine coolant. (See 01–12A–5 ENGINE COOLANT REPLACEMENT [L3, AJ].)
20. Add ATF to the specified level. (See 05–17B–12 AUTOMATIC TRANSAXLE FLUID (ATF) REPLACEMENT [AW6A-EL].)
21. Install the front crossmember. (See 02–13–20 FRONT CROSSMEMBER REMOVAL/INSTALLATION.)
22. Install the under cover.
23. Install the air cleaner component and air cleaner bracket. (See 01–13C–2 INTAKE AIR SYSTEM REMOVAL/INSTALLATION [AJ].)
24. Connect the negative battery cable.

TRANSAXLE FLUID TEMPERATURE (TFT) SENSOR REMOVAL/INSTALLATION [AW6A-EL]

E6U051719200W03

Warning
- **A hot transaxle and ATF can cause severe burns. Turn off the engine and wait until they are cool before replacing the ATF.**

Caution
- **Water or foreign material entering the connector can cause a poor connection or corrosion. Be sure not to allow water or foreign material on the connector when disconnecting.**
- **Do not damage the terminals.**

1. Disconnect the negative battery cable.
2. Remove the air cleaner component and air cleaner bracket. (See 01–13C–2 INTAKE AIR SYSTEM REMOVAL/INSTALLATION [AJ].)
3. Remove the TCM. (See 05–17B–25 TCM REMOVAL/INSTALLATION [AW6A-EL].)
4. Place the heater pipe out of the way.
5. Remove the under cover.
6. Drain the ATF. (See 05–17B–12 AUTOMATIC TRANSAXLE FLUID (ATF) REPLACEMENT [AW6A-EL].)
7. Drain the engine coolant. (See 01–12A–5 ENGINE COOLANT REPLACEMENT [L3, AJ].)
8. Disconnect the lower radiator hose and place the lower radiator hose out of the way.
9. Remove the oil hose, oil pipe and O-ring. (See 05–17B–49 OIL COOLER REMOVAL/INSTALLATION [AW6A-EL].)
10. Remove the front crossmember. (See 02–13–20 FRONT CROSSMEMBER REMOVAL/INSTALLATION.)
11. Remove the control valve body. (See 05–17B–39 On-Vehicle Removal.)
12. Remove the coupler component lock plate.

Caution
- **Do not damage the wiring harness.**
- **Do not pull hard on the wiring harness.**

13. Remove the coupler component from the transaxle case.

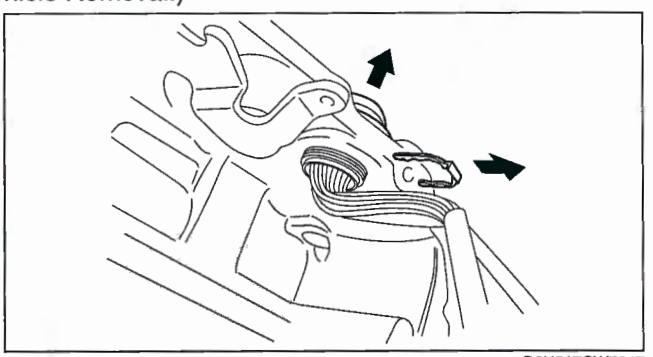

D6U517CW7017

14. Remove the O-ring and the gasket form the coupler component.
15. Apply ATF to a new gasket and install it on the coupler component.

Caution
- **Do not apply ATF to the O-ring.**

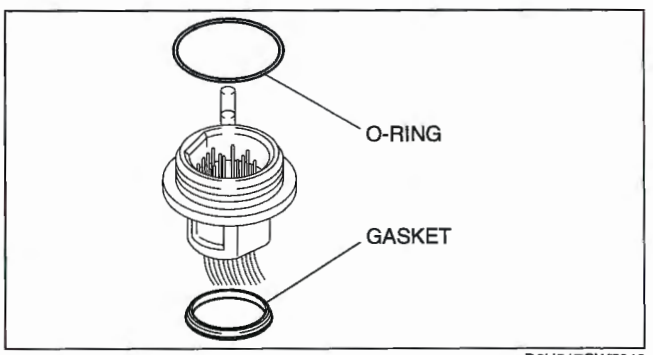

D6U517CW7018

16. Install a new O-ring to the coupler component.

Caution
- **Do not apply too much force to the coupler component.**
- **Do not damage the coupler component.**

17. Install the coupler component to the transaxle case.

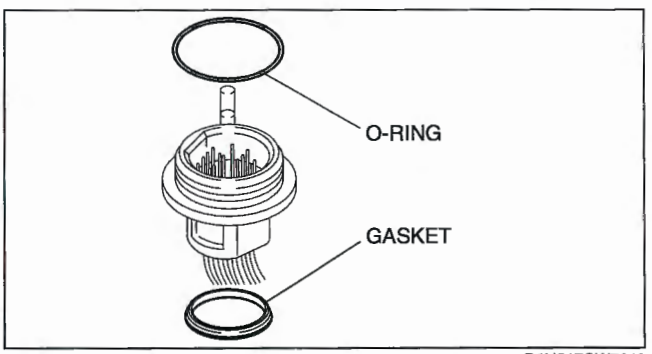

D6U517CW7018

18. Install a new coupler component lock plate.
19. Install the control valve body. (See 05–17B–43 On-Vehicle Installation.)
20. Apply ATF to a new O-ring and install it on the oil pipe.
21. Install the oil pipe and oil hose. (See 05–17B–49 OIL COOLER REMOVAL/INSTALLATION [AW6A-EL].)
22. Connect the lower radiator hose.
23. Add the engine coolant. (See 01–12A–5 ENGINE COOLANT REPLACEMENT [L3, AJ].)
24. Add ATF to the specified level. (See 05–17B–12 AUTOMATIC TRANSAXLE FLUID (ATF) REPLACEMENT [AW6A-EL].)

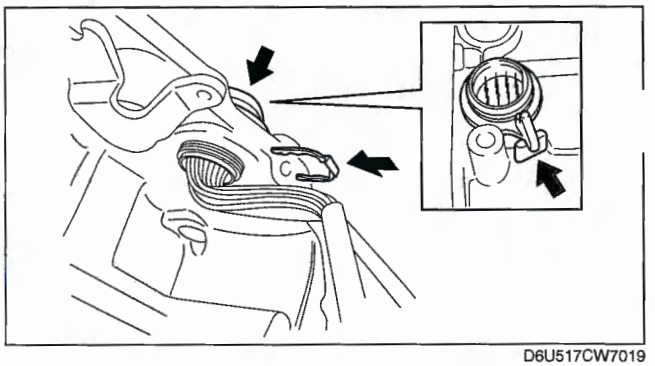

D6U517CW7019

25. Install the front crossmember. (See 02–13–20 FRONT CROSSMEMBER REMOVAL/INSTALLATION.)
26. Install the under cover.
27. Install the TCM. (See 05–17B–25 TCM REMOVAL/INSTALLATION [AW6A-EL].)
28. Install the air cleaner component and air cleaner bracket. (See 01–13C–2 INTAKE AIR SYSTEM REMOVAL/INSTALLATION [AJ].)
29. Connect the negative battery cable.
30. Perform the mechanical system test. (See 05–17B–3 MECHANICAL SYSTEM TEST [AW6A-EL].)

INPUT/TURBINE SPEED SENSOR INSPECTION [AW6A-EL]

E6U051719200W04

On-Vehicle Inspection

Caution

- **Water or foreign material entering the connector can cause a poor connection or corrosion. Be sure not to allow water or foreign material on the connector when disconnecting.**
- **Do not damage the terminals.**

1. Disconnect the negative battery cable.
2. Remove the air cleaner component. (See 01–13C–2 INTAKE AIR SYSTEM REMOVAL/INSTALLATION [AJ].)
3. Remove the TCM. (See 05–17B–25 TCM REMOVAL/INSTALLATION [AW6A-EL].)
4. Verify that there is no continuity between the coupler component terminals B12 and GND or B13 and GND.
   - If there is any malfunction, inspect the coupler component.
   - If the coupler component is normal, perform an off-vehicle inspection of input/turbine speed sensor. (See 05–17B–17 Off-Vehicle Inspection.)

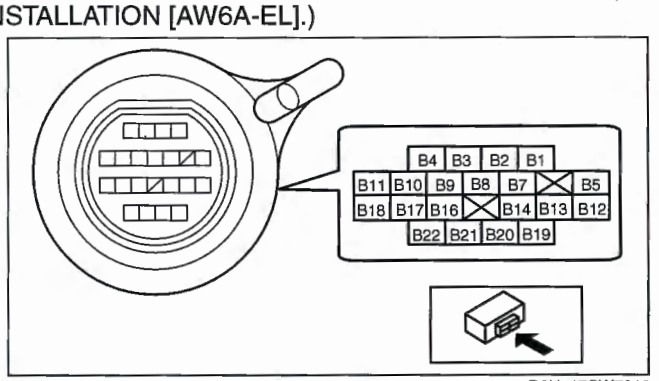

D6U517CW7016

Note

- Inspect with a tester that can indicate **more than 10 megohms** and confirm that the value is **more than 1 megohm**.

5. Verify that there is continuity between coupler component terminals B12 and B13.
   - If there is any malfunction, inspect the coupler component.
   - If the coupler component is normal, replace the input/turbine speed sensor. (See 05–17B–18 INPUT/TURBINE SPEED SENSOR REMOVAL/INSTALLATION [AW6A-EL].)
6. Install the TCM. (See 05–17B–25 TCM REMOVAL/INSTALLATION [AW6A-EL].)
7. Install the air cleaner component. (See 01–13C–2 INTAKE AIR SYSTEM REMOVAL/INSTALLATION [AJ].)
8. Connect the negative battery cable.

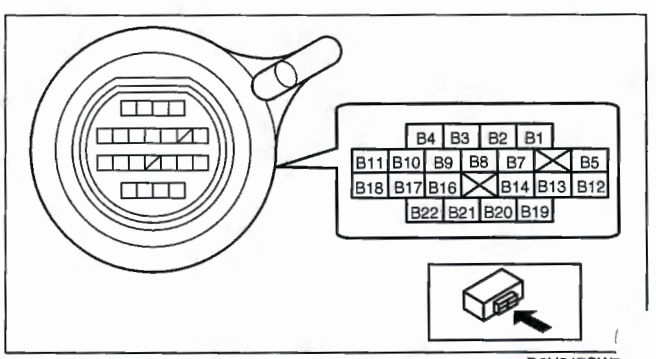

D6U517CW7

Off-Vehicle Inspection

Warning
- **A hot transaxle and ATF can cause severe burns. Turn off the engine and wait until they are cool before replacing the ATF.**

Caution
- **Water or foreign material entering the connector can cause a poor connection or corrosion. Be sure not to allow water or foreign material on the connector when disconnecting.**
- **Do not damage the terminals.**

1. Disconnect the negative battery cable.
2. Remove the air cleaner component and air cleaner bracket. (See 01–13C–2 INTAKE AIR SYSTEM REMOVAL/INSTALLATION [AJ].)
3. Place the heater pipe out of the way.
4. Remove the under cover.
5. Drain the ATF. (See 05–17B–12 AUTOMATIC TRANSAXLE FLUID (ATF) REPLACEMENT [AW6A-EL].)
6. Drain the engine coolant. (See 01–12A–5 ENGINE COOLANT REPLACEMENT [L3, AJ].)
7. Disconnect the lower radiator hose and place the lower radiator hose out of the way.
8. Remove the oil hose, oil pipe and O-ring. (See 05–17B–49 OIL COOLER REMOVAL/INSTALLATION [AW6A-EL].)
9. Remove the front crossmember. (See 02–13–20 FRONT CROSSMEMBER REMOVAL/INSTALLATION.)
10. Remove the control valve body. (See 05–17B–39 On-Vehicle Removal.)
11. Remove the input/turbine speed sensor. (See 05–17B–18 INPUT/TURBINE SPEED SENSOR REMOVAL/INSTALLATION [AW6A-EL].)
12. Connect the input/turbine speed sensor terminal 2 to the battery positive terminal, connect the battery negative terminal to input/turbine speed sensor terminal 1 through an ammeter set to a resistance of **100 ohm**.

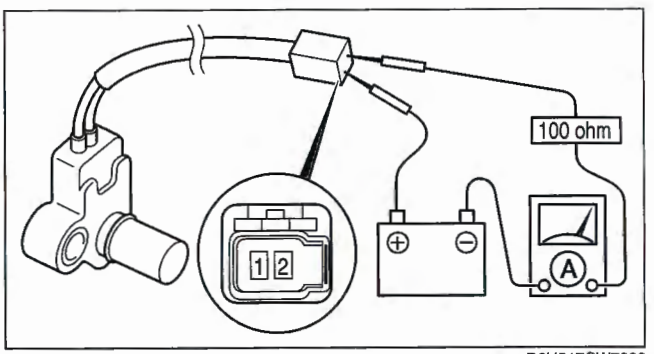

D6U517CW7090

13. Measure the current while waving a magnet back and forth over the top of the input/turbine speed sensor (**less than 5 mm {0.197 in}**).
    - If there is any malfunction, replace the input/turbine speed sensor. (See 05–17B–18 INPUT/TURBINE SPEED SENSOR REMOVAL/INSTALLATION [AW6A-EL].)

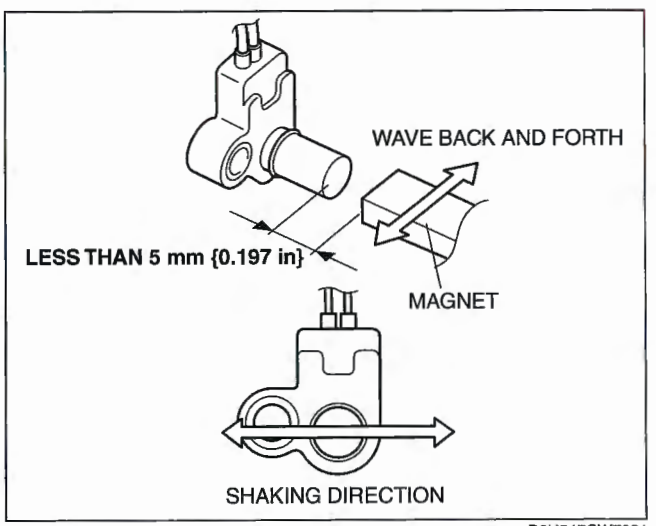

D6U517CW7091

Input/turbine speed sensor

Signal	Current (mA)
High	12.0—16.0
Low	4.0—8.0

14. Install the input/turbine speed sensor. (See 05–17B–18 INPUT/TURBINE SPEED SENSOR REMOVAL/INSTALLATION [AW6A-EL].)
15. Install the control valve body. (See 05–17B–43 On-Vehicle Installation.)
16. Apply ATF to a new O-ring and install it on the oil pipe.
17. Install the oil pipe and oil hose. (See 05–17B–49 OIL COOLER REMOVAL/INSTALLATION [AW6A-EL].)
18. Connect the lower radiator hose.
19. Add the engine coolant. (See 01–12A–5 ENGINE COOLANT REPLACEMENT [L3, AJ].)
20. Add ATF to the specified level. (See 05–17B–12 AUTOMATIC TRANSAXLE FLUID (ATF) REPLACEMENT [AW6A-EL].)
21. Install the front crossmember. (See 02–13–20 FRONT CROSSMEMBER REMOVAL/INSTALLATION.)
22. Install the under cover.
23. Install the air cleaner component and air cleaner bracket. (See 01–13C–2 INTAKE AIR SYSTEM REMOVAL/INSTALLATION [AJ].)
24. Perform the mechanical system test. (See 05–17B–3 MECHANICAL SYSTEM TEST [AW6A-EL].)

INPUT/TURBINE SPEED SENSOR REMOVAL/INSTALLATION [AW6A-EL]

E6U051719200W05

Warning

- **A hot transaxle and ATF can cause severe burns. Turn off the engine and wait until then are cool before replacing the ATF.**

1. Disconnect the negative battery cable.
2. Remove the air cleaner component and air cleaner bracket. (See 01–13C–2 INTAKE AIR SYSTEM REMOVAL/INSTALLATION [AJ].)
3. Place the heater pipe out of the way.
4. Remove the under cover.
5. Drain the ATF. (See 05–17B–12 AUTOMATIC TRANSAXLE FLUID (ATF) REPLACEMENT [AW6A-EL].)
6. Drain the engine coolant. (See 01–12A–5 ENGINE COOLANT REPLACEMENT [L3, AJ].)
7. Disconnect the lower radiator hose and place the lower radiator hose out of the way.
8. Remove the oil hose, oil pipe and O-ring. (See 05–17B–49 OIL COOLER REMOVAL/INSTALLATION [AW6A-EL].)
9. Remove the front crossmember. (See 02–13–20 FRONT CROSSMEMBER REMOVAL/INSTALLATION.)
10. Remove the control valve body. (See 05–17B–39 On-Vehicle Removal.)

Caution

- **Do not damage the input/turbine speed sensor.**

11. Remove the input/turbine speed sensor.
12. Install the input/turbine speed sensor.

Tightening torque
3.9—6.9 N·m {40—70 kgf·cm, 26—60 in·lbf}

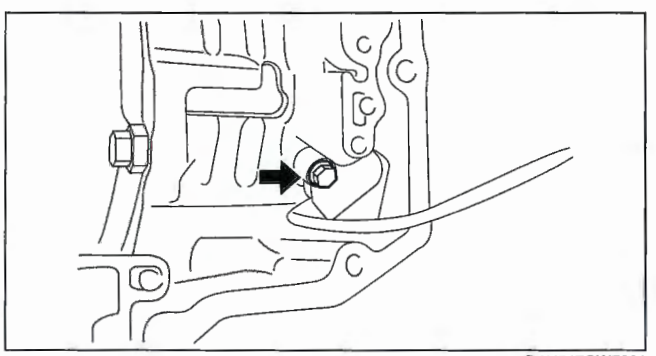

D6U517CW7083

13. Install the control valve body. (See 05–17B–43 On-Vehicle Installation.)
14. Apply ATF to a new O-ring and install it on the oil pipe.
15. Install the oil pipe and oil hose. (See 05–17B–49 OIL COOLER REMOVAL/INSTALLATION [AW6A-EL].)
16. Connect the lower radiator hose.
17. Add the engine coolant. (See 01–12A–5 ENGINE COOLANT REPLACEMENT [L3, AJ].)
18. Add ATF to the specified level. (See 05–17B–12 AUTOMATIC TRANSAXLE FLUID (ATF) REPLACEMENT [AW6A-EL].)
19. Install the front crossmember. (See 02–13–20 FRONT CROSSMEMBER REMOVAL/INSTALLATION.)
20. Install the under cover.
21. Install the air cleaner component and air cleaner bracket. (See 01–13C–2 INTAKE AIR SYSTEM REMOVAL/INSTALLATION [AJ].)
22. Perform the mechanical system test. (See 05–17B–3 MECHANICAL SYSTEM TEST [AW6A-EL].)

VEHICLE SPEED SENSOR (VSS) INSPECTION [AW6A-EL]

E6U051719200W06

On-Vehicle Inspection

Caution

- **Water or foreign material entering the connector can cause a poor connection or corrosion. Be sure not to allow water or foreign material on the connector when disconnecting.**
- **Do not damage the terminals.**

1. Disconnect the negative battery cable.
2. Remove the air cleaner component. (See 01–13C–2 INTAKE AIR SYSTEM REMOVAL/INSTALLATION [AJ].)
3. Remove the TCM. (See 05–17B–25 TCM REMOVAL/INSTALLATION [AW6A-EL].)
4. Verify that there is no continuity between the coupler component terminals B19 and GND or B20 and GND.
   - If there is any malfunction, inspect the coupler component.
   - If the coupler component is normal, replace the ATX. (See 05–17B–30 AUTOMATIC TRANSAXLE REMOVAL/INSTALLATION [AW6A-EL].)

   Note
   - Inspect with a tester that can indicate **more than 10 megohms** and confirm that the value is **more than 1 megohm**.

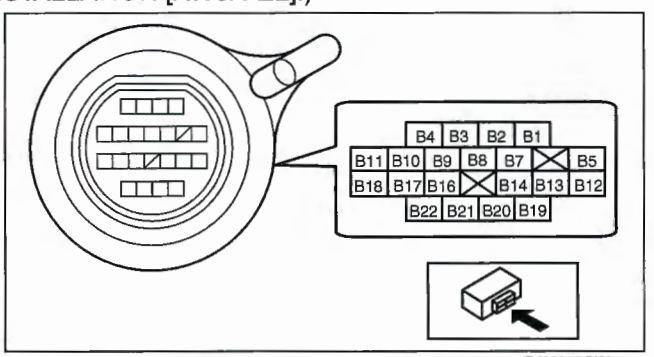

D6U517CW7016

5. Verify that there is continuity between coupler component terminals B19 and B20.
   - If there is any malfunction, inspect the coupler component.
   - If the coupler component is normal, replace the ATX. (See 05–17B–30 AUTOMATIC TRANSAXLE REMOVAL/INSTALLATION [AW6A-EL].)
6. Install the TCM. (See 05–17B–25 TCM REMOVAL/INSTALLATION [AW6A-EL].)
7. Install the air cleaner component. (See 01–13C–2 INTAKE AIR SYSTEM REMOVAL/INSTALLATION [AJ].)
8. Connect the negative battery cable.

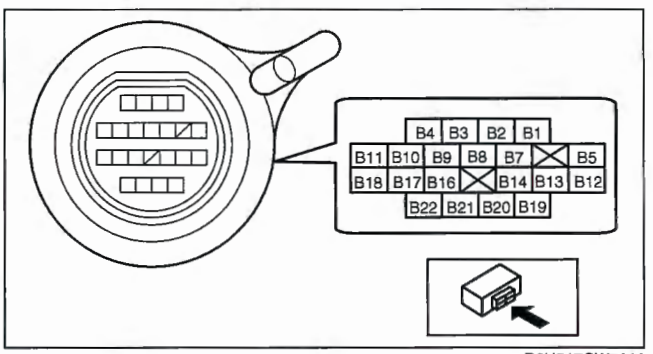

D6U517CW7016

SOLENOID VALVE INSPECTION [AW6A-EL]

E6U051721101W01

Resistance Inspection (On-Vehicle Inspection)

Caution
- **Water or foreign material entering the connector can cause a poor connection or corrosion. Be sure not to allow water or foreign material on the connector when disconnecting.**
- **Do not damage the terminals.**

1. Disconnect the negative battery cable.
2. Remove the air cleaner component. (See 01–13C–2 INTAKE AIR SYSTEM REMOVAL/INSTALLATION [AJ].)
3. Remove the TCM. (See 05–17B–25 TCM REMOVAL/INSTALLATION [AW6A-EL].)
4. Measure the resistance between the following terminals.
   - If there is any malfunction, inspect the coupler component.
   - If the coupler component is normal, replace the control valve body. (See 05–17B–39 CONTROL VALVE BODY REMOVAL/INSTALLATION [AW6A-EL].)

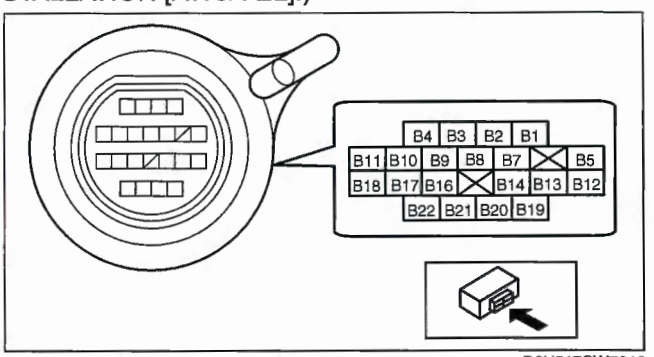

D6U517CW7016

Solenoid valve resistance (ATF temperature: 20 C {68 F})

Terminal	Solenoid valve	Resistance (ohm)
B5—GND	Shift solenoid A	11—15
B2—GND	Shift solenoid B	11—15
B11—B10	Shift solenoid C	5.0—5.6
B17—B18	Shift solenoid D	5.0—5.6
B14—B22	Shift solenoid E	5.0—5.6
B21—B16	Shift solenoid F	5.0—5.6
B9—B4	TCC control solenoid	5.0—5.6
B3—B1	Line pressure control solenoid	5.0—5.6

5. Install the TCM. (See 05–17B–25 TCM REMOVAL/INSTALLATION [AW6A-EL].)
6. Install the air cleaner component. (See 01–13C–2 INTAKE AIR SYSTEM REMOVAL/INSTALLATION [AJ].)
7. Connect the negative battery cable.

Continuity Inspection (On-Vehicle Inspection)

Caution
- **Water or foreign material entering the connector can cause a poor connection or corrosion. Be sure not to allow water or foreign material on the connector when disconnecting.**
- **Do not damage the terminals.**

1. Disconnect the negative battery cable.
2. Remove the air cleaner component. (See 01–13C–2 INTAKE AIR SYSTEM REMOVAL/INSTALLATION [AJ].)
3. Remove the TCM. (See 05–17B–25 TCM REMOVAL/INSTALLATION [AW6A-EL].)
4. Verify that there is no continuity between coupler component terminals B1, B3, B4, B9, B10, B11, B14, B17, B18, B21, B22 and GND.
   - If there is any malfunction, inspect the coupler component.
   - If the coupler component is normal, replace the control valve body. (See 05–17B–39 CONTROL VALVE BODY REMOVAL/INSTALLATION [AW6A-EL].)
5. Install the TCM. (See 05–17B–25 TCM REMOVAL/INSTALLATION [AW6A-EL].)
6. Install the air cleaner component. (See 01–13C–2 INTAKE AIR SYSTEM REMOVAL/INSTALLATION [AJ].)
7. Connect the negative battery cable.

TCM INSPECTION [AW6A-EL]

E6U051718901W01

TR Switch Operating Inspection

1. Verify that the starter operates only when the ignition switch is turned to the START position with the selector lever in P or N position.
   - If there is any malfunction, neutral position learning. (See 05–17B–28 Neutral Position Learning.)
2. Verify that the back-up lights illuminate when shifted to R position with the ignition switch at the ON position.
   - If there is any malfunction, neutral position learning. (See 05–17B–28 Neutral Position Learning.)
3. Verify that the positions of the selector lever and the indicator light correspond.
   - If there is any malfunction, perform the neutral position learning. (See 05–17B–28 Neutral Position Learning.)
4. Verify that the TR PID is normal.
   - If there is any malfunction, perform the neutral position learning. (See 05–17B–28 Neutral Position Learning.)

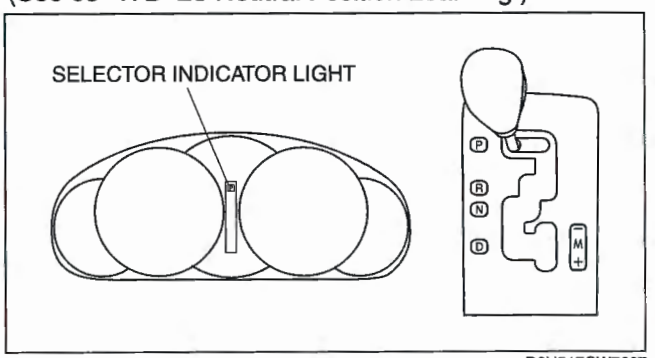

D6U517CW7007

Control Module Inspection

1. Remove the air cleaner component. (See01–13C–2 INTAKE AIR SYSTEM REMOVAL/INSTALLATION [AJ].)
2. Measure the voltage at each TCM short cord connector wiring harness-side) terminal and refer to the terminal voltage table.
   - If the voltage is not as specified in the Terminal Voltage Table (Reference), inspect the parts under "Inspection item (s)".

Warning

- **Be careful not to damage the connector waterproofing when measuring the TCM terminal voltage. If damaged, the waterproofing efficiency could be negatively affected.**

Note

- Use the ground of terminal J of the TCM short cord connector wiring harness-side) when measuring terminal voltage, as an error may occur when connecting the negative circuit tester to ground.

Terminal Voltage Table (Reference)

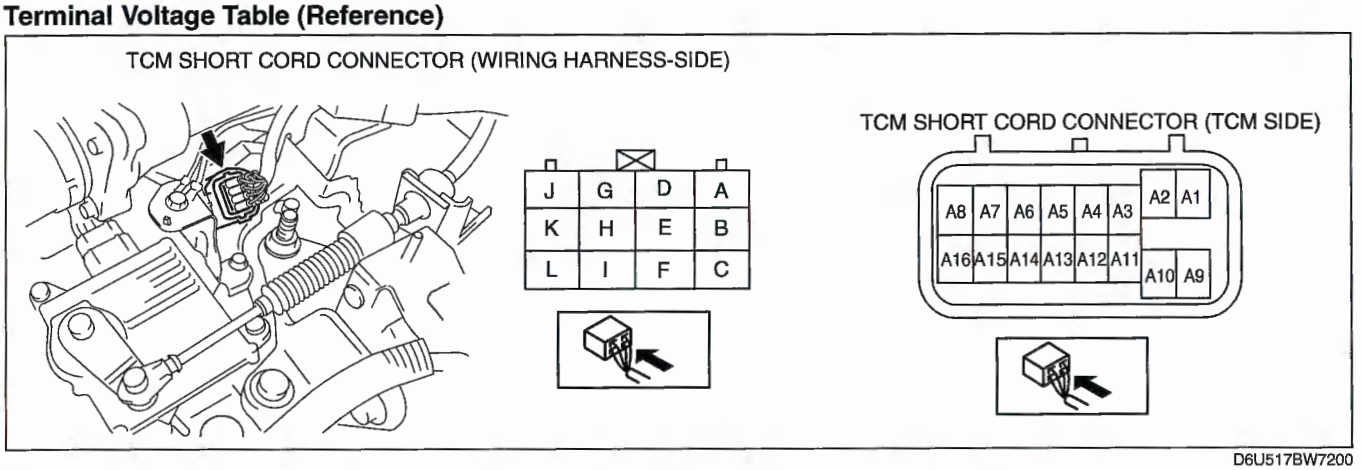

D6U517BW7200

Terminal	Signal	Connected to	Test condition	Voltage (V)	Inspection item (s)
A	Battery back up supply	Battery	Constant	B+	• Inspect for continuity between TCM short cord connector terminal A (wiring harness-side) and A1 wiring harness-side). • Inspect related harness
B	Power supply	Ignition switch	Ignition switch ON	B+	• Inspect for continuity between TCM short cord connector terminal B wiring harness-side) and A11 (wiring harness-side). • Inspect Ignition switch • Inspect related harness
			Ignition switch OFF	Below 1.0	

Terminal	Signal	Connected to	Test condition		Voltage (V)	Inspection item (s)
C	Starter relay	Starter relay	Shift the selector lever to P or N position.	Ignition switch ON	B+	• Inspect for continuity between TCM short cord connector terminal C (wiring harness-sid and A5 (wiring harness-side). • Inspect related harness
				Ignition switch OFF	Below 1.0	
D	Up switch (Selector lever component)	Up switch (Selector lever component)	Shift up (M range)		Below 1.0	• Inspect for continuity between TCM short cord connector terminal D (wiring harness-side) and A3 (wiring harness-side). • Inspect selector lever component (See 05–18–6 SELECTOR LEVER COMPONENT INSPECTION) • Inspect related harness
			Other ranges, all positions		B+	
F	CAN_L	PCM	Because this terminal is for serial communication, good/no good judgment by terminal voltage is not possible. Carry out inspection according to DTCs.		—	• Inspect for continuity between TCM short cord connector terminal F (wiring harness-side) and A6 (wiring harness-side). • Inspect related harness
G	M range switch	M range switch	M range		Below 1.0	• Inspect for continuity between TCM short cord connector terminal G (wiring harness-side) and A7 (wiring harness-side). • Inspect Selector lever component (See 05–18–6 SELECTOR LEVER COMPONENT INSPECTION) • Inspect related harness
			Other positions, all ranges		B+	
H	CAN_H	PCM	Because this terminal is for serial communication, good/no good judgment by terminal voltage is not possible. Carry out inspection according to DTCs.		—	• Inspect for continuity between TCM short cord connector terminal H (wiring harness-side) and A14 (wiring harness-side). • Inspect related harness
K	Down switch (Selector lever component)	Down switch (Selector lever component)	Shift down (M range)		Below 1.0	• Inspect for continuity between TCM short cord connector terminal K (wiring harness-side) and A14 (wiring harness-side). • Inspect selector lever component (See 05–18–6 SELECTOR LEVER COMPONENT INSPECTION) • Inspect related harness
			Other ranges, all positions		B+	
L	Back-up light relay	Back-up light relay	Ignition switch ON	Shift the selector lever to R position.	Below 1.0	• Inspect for continuity between TCM short cord connector terminal L (wiring harness-side) and A13 (wiring harness-side). • Inspect back-up light relay (See 09–21–7 RELAY INSPECTION) • Inspect related harness
				Other	B+	

3. Remove the TCM. (See 05–17B–25 TCM REMOVAL/INSTALLATION [AW6A-EL].)
4. Verify that continuity or resistance at terminal is as indicated in the terminal continuity/ resistance table.
   - If there is any malfunction, inspect the parts under "Inspection item (s)".
     — If the system does not work properly even though the parts or related wiring harnesses do not have any malfunction, replace the TCM. (See 05–17B–25 TCM REMOVAL/INSTALLATION [AW6A-EL].)

Terminal Continuity/Resistance Table (Reference)

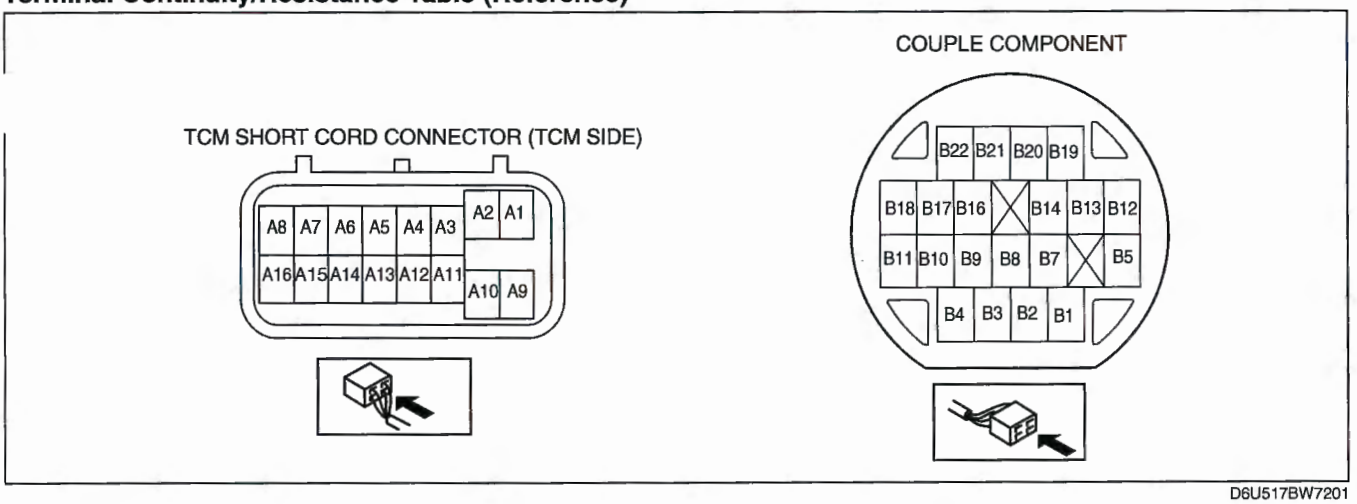

D6U517BW7201

Terminal	Signal	Connected to	Test Condition		Continuity/ Resistance	Inspection item (s)
A9	System GND	GND	Constant		Continuity	• Inspect related harness
B1	Line pressure control solenoid control GND	Line pressure control solenoid	• Inspect resistance between couple component terminals B3 and B1 (wiring harness-side).	ATF temperature: 20°C {68°F}	5.0—5.6 (ohms)	• Inspect line pressure control solenoid (See 05–17B–20 SOLENOID VALVE INSPECTION [AW6A-EL]) • Inspect related harness
B2	Shift solenoid B control	Shift solenoid B	ATF temperature: 20°C {68°F}		11—15 (ohms)	• Inspect shift solenoid B (See 05–17B–20 SOLENOID VALVE INSPECTION [AW6A-EL]) • Inspect related harness
B3	Line pressure control solenoid control	Line pressure control solenoid	• Inspect resistance between couple component terminals B3 and B1 (wiring harness-side).	ATF temperature: 20°C {68°F}	5.0—5.6 (ohms)	• Inspect line pressure control solenoid (See 05–17B–20 SOLENOID VALVE INSPECTION [AW6A-EL]) • Inspect related harness
B4	TCC control solenoid control GND	TCC control solenoid	• Inspect resistance between couple component terminals B9 and B4 (wiring harness-side).	ATF temperature: 20°C {68°F}	5.0—5.6 (ohms)	• Inspect TCC control solenoid (See 05–17B–20 SOLENOID VALVE INSPECTION [AW6A-EL]) • Inspect related harness
B5	Shift solenoid A control	Shift solenoid A	ATF temperature: 20°C {68°F}		11—15 (ohms)	• Inspect shift solenoid A (See 05–17B–20 SOLENOID VALVE INSPECTION [AW6A-EL]) • Inspect related harness
B7	TFT sensor GND	TFT sensor	• Inspect resistance between couple component terminals B7 and B8 (wiring harness-side).	ATF temperature: 10°C {50°F}	5.62—7.31 (kilohms)	• Inspect TFT sensor (See 05–17B–13 TRANSAXLE FLUID TEMPERATURE (TFT) SENSOR INSPECTION [AW6A-EL]) • Inspect related harness
				ATF temperature: 25°C {77°F}	3.5 (kilohms)	
B8	TFT sensor			ATF temperature: 110°C {230°F}	0.22—0.27 (kilohms)	

Terminal	Signal	Connected to	Test Condition		Continuity/ Resistance	Inspection item (s)
B9	TCC control solenoid control	TCC control solenoid	• Inspect resistance between couple component terminals B9 and B4 (wiring harness-side).	ATF temperature: 20°C {68°F}	5.0—5.6 (ohms)	• Inspect TCC control solenoid (See 05–17B–20 SOLENOID VALVE INSPECTION [AW6A-EL]) • Inspect related harness
B10	Shift solenoid C control GND	Shift solenoid C	• Inspect resistance between couple component terminals B11 and B10 (wiring harness-side).	ATF temperature: 20°C {68°F}	5.0—5.6 (ohms)	• Inspect shift solenoid C (See 05–17B–20 SOLENOID VALVE INSPECTION [AW6A-EL]) • Inspect related harness
B11	Shift solenoid C control					
B12	Input/turbine speed sensor (–)	Input/turbine speed sensor	• Inspect for continuity between couple component terminals B12 and B13 (wiring harness-side).		Continuity	• Inspect input/turbine speed sensor (See 05–17B–16 INPUT/TURBINE SPEED SENSOR INSPECTION [AW6A-EL]) • Inspect related harness
B13	Input/turbine speed sensor (+)					
B14	Shift solenoid E control	Shift solenoid E	• Inspect resistance between couple component terminals B14and B22 (wiring harness-side).	ATF temperature: 20°C {68°F}	5.0—5.6 (ohms)	• Inspect shift solenoid E (See 05–17B–20 SOLENOID VALVE INSPECTION [AW6A-EL]) • Inspect related harness
B16	Shift solenoid F control GND	Shift solenoid F	• Inspect resistance between couple component terminals B21and B16 (wiring harness-side).	ATF temperature: 20°C {68°F}	5.0—5.6 (ohms)	• Inspect shift solenoid F (See 05–17B–20 SOLENOID VALVE INSPECTION [AW6A-EL]) • Inspect related harness
B17	Shift solenoid D control	Shift solenoid D	• Inspect resistance between couple component terminals B17and B18 (wiring harness-side).	ATF temperature: 20°C {68°F}	5.0—5.6 (ohms)	• Inspect shift solenoid D (See 05–17B–20 SOLENOID VALVE INSPECTION [AW6A-EL]) • Inspect related harness
B18	Shift solenoid D control GND					
B19	Vehicle speed (–)	VSS	• Inspect for continuity between couple component terminals B19 and B20 (wiring harness-side).		Continuity	• Inspect VSS (See 05–17B–19 VEHICLE SPEED SENSOR (VSS) INSPECTION [AW6A-EL]) • Inspect related harness
B20	Vehicle speed (+)	VSS				
B21	Shift solenoid F control	Shift solenoid F	• Inspect resistance between couple component terminals B21and B16 (wiring harness-side).	ATF temperature: 20°C {68°F}	5.0—5.6 (ohms)	• Inspect shift solenoid F (See 05–17B–20 SOLENOID VALVE INSPECTION [AW6A-EL]) • Inspect related harness
B22	Shift solenoid E control GND	Shift solenoid E	• Inspect resistance between couple component terminals B14and B22 (wiring harness-side).	ATF temperature: 20°C {68°F}	5.0—5.6 (ohms)	• Inspect shift solenoid E (See 05–17B–20 SOLENOID VALVE INSPECTION [AW6A-EL]) • Inspect related harness

TCM REMOVAL/INSTALLATION [AW6A-EL]

E6U051718901W02

Caution
- **Water or foreign material entering the connector can cause a poor connection or corrosion. Be sure not to allow water or foreign material on the connector when disconnecting.**

1. Disconnect the negative battery cable.
2. Remove the air cleaner component. (See 01–13C–2 INTAKE AIR SYSTEM REMOVAL/INSTALLATION [AJ].)
3. Disconnect the TCM connector.
4. Remove the clip and disconnect the selector cable.

Caution
- **Do not use an impact wrench. Hold the manual shaft lever when removing the manual shaft nut, or the transaxle may be damaged.**

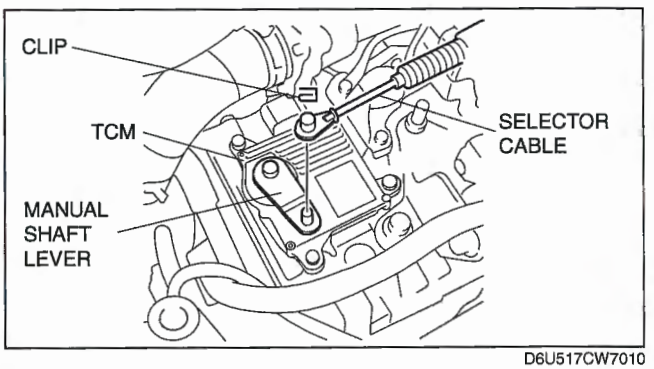

D6U517CW7010

5. Set the adjustable wrench as shown in the figure to hold the manual shaft lever.

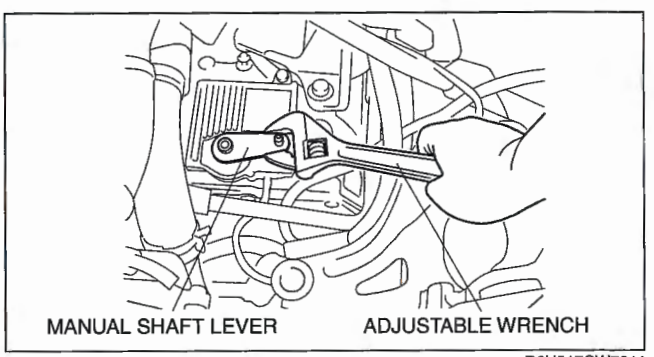

D6U517CW7011

6. Remove the manual shaft nut and washer.

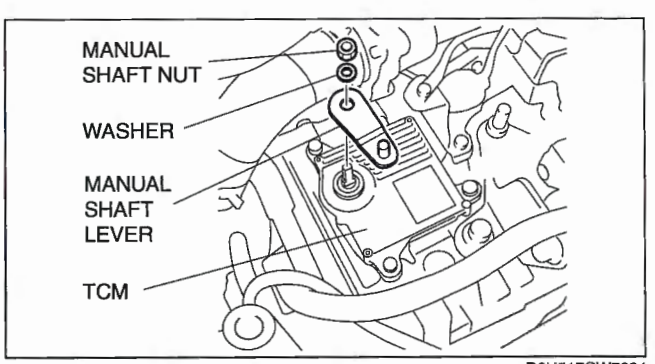

D6U517CW7084

7. Remove the TCM.

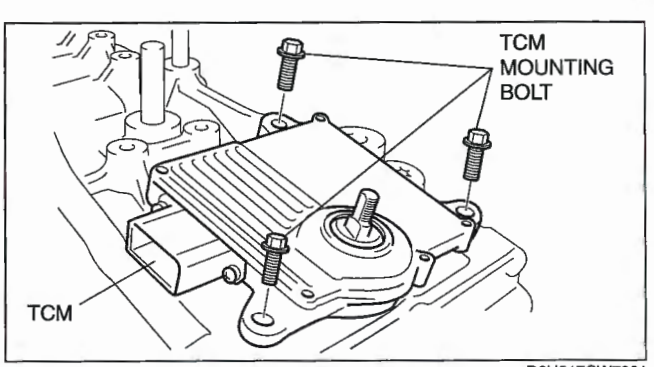

D6U517CW7061

Caution
- **Do not touch the terminals.**

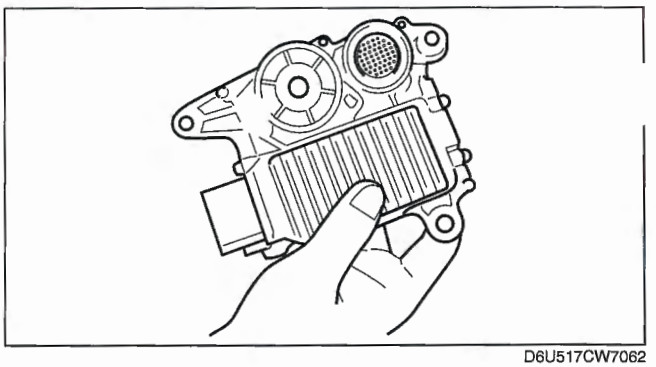

D6U517CW7062

8. Inspect the condition of the connector pin of the coupler component (foreign material, bent pins, broken pins) and O-ring after the TCM is removed.

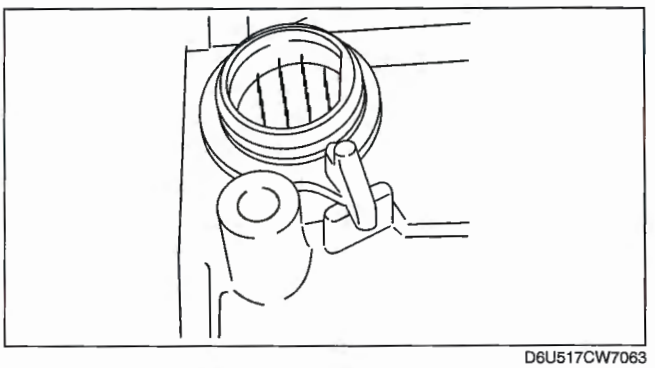

D6U517CW7063

9. Align the transaxle case and coupler component connector.

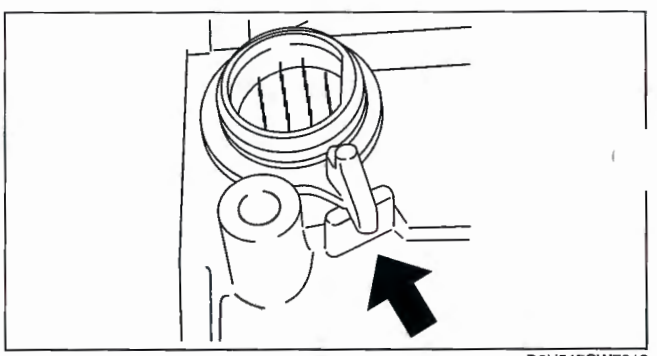

D6U517CW7012

10. Be sure to match the position of the TCM marking.

Caution
- **Do not turn more than 60° from the marking.**

11. Install the TCM.

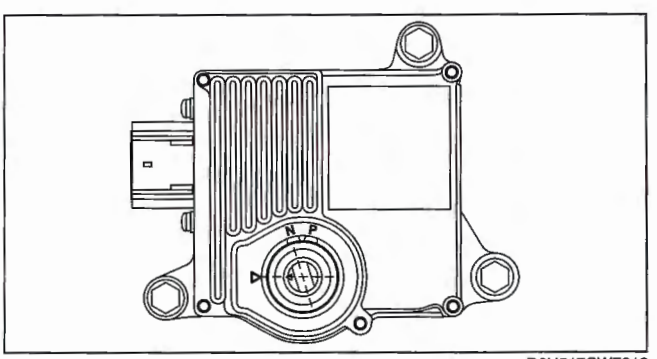

D6U517CW7013

12. Verify the correct positioning of the TCM and coupler component.
13. Tighten the TCM mounting bolts.

Tightening torque
19.6—29.4 N·m {2.0—2.9 kgf·m, 14.5—21.6 ft·lbf}

Caution
- **Do not use an impact wrench. Hold the manual shaft lever when removing the manual shaft nut, or the transaxle may be damaged.**

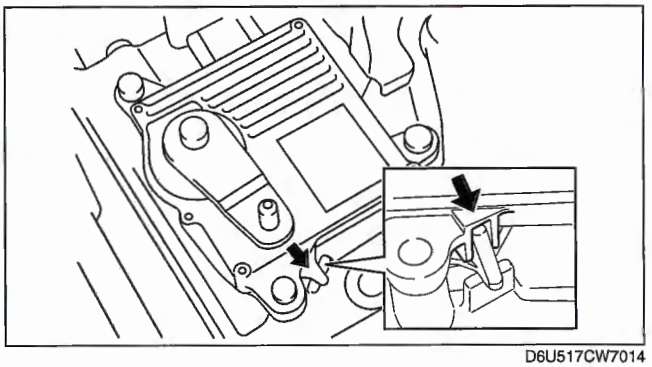
D6U517CW7014

14. Install the manual shaft lever and the washer.

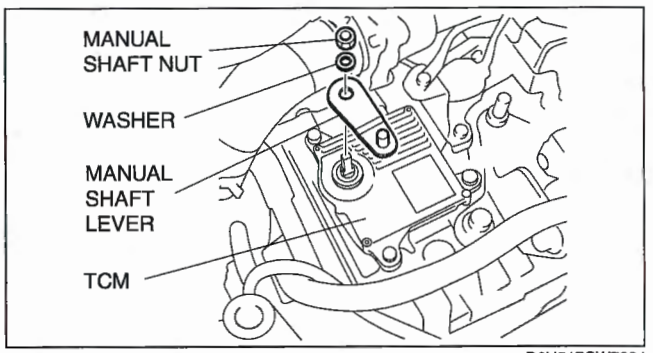

D6U517CW7084

15. Set the adjustable wrench as shown in the figure to hold the manual shaft lever, and tighten the manual shaft nut.

Tightening torque
9.8—14.7 N·m {100—142 kgf·cm, 87—123 in·lbf}

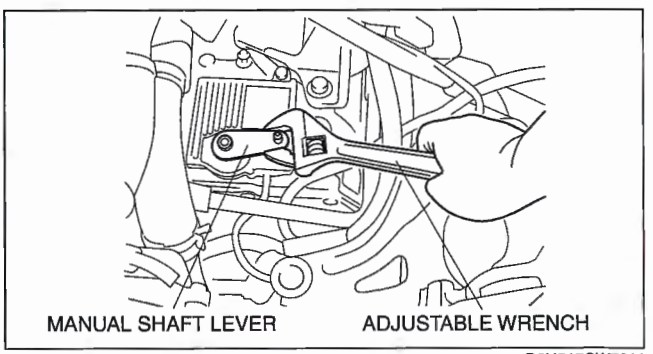

D6U517CW7011

16. Install the clip to the selector cable as shown in the figure.
17. Shift the selector lever to P position.
18. Turn the manual shaft lever to P position.

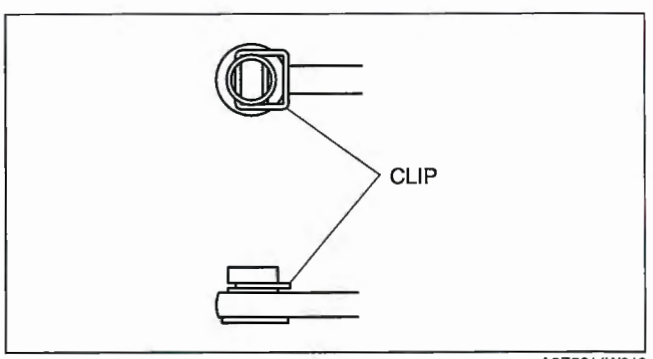

A6E5614W018

19. Connect the selector cable and install the clip.
20. Connect the TCM connector.
21. Install the air cleaner component. (See 01–13C–2 INTAKE AIR SYSTEM REMOVAL/INSTALLATION [AJ].)
22. Connect the negative battery cable.

Warning
- **If you replace the ATX or TCM, be sure to initialize the learned values and perform neutral position learning.**

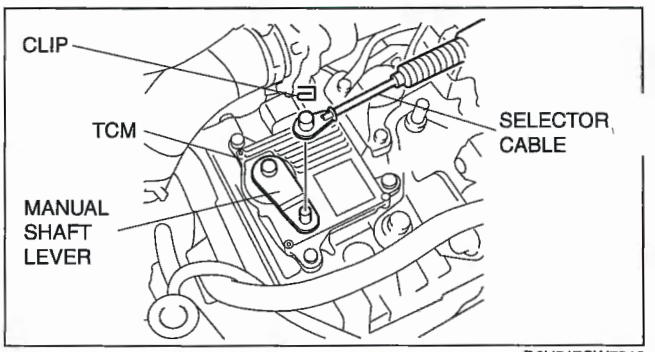

D6U517CW7010

23. Perform the neutral position learning. (See 05–17B–28 Neutral Position Learning.)

Neutral Position Learning
1. Engage the parking brake and use wheel chocks at the front and rear of the wheels.
2. Turn the ignition switch to the ON position. (Engine off)

Caution
- **Inspect that the vehicle does not move before operation.**

3. Shift the selector lever to the N position.
4. Be sure to match the position of the TCM marking.

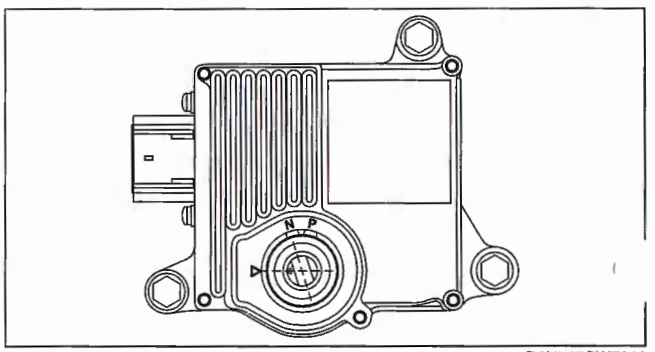
D6U517CW7013

5. Connect the WDS or equivalent to the DLC-2.
6. Set up the WDS or equivalent (including the vehicle recognition).

Caution
- **The command cannot be input, unless the ignition switch is ON, the selector lever is in N position, the engine is stopped, and the vehicle speed is 0 km/h. {0 mph}**

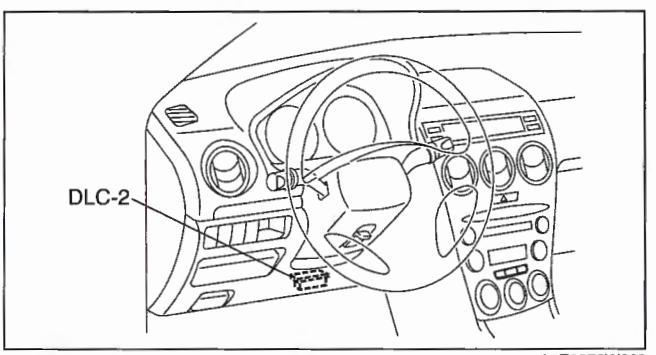

A6E3970W002

7. Select "Neutral Position Learning" and perform procedure according to directions on the WDS or equivalent screen.
   - If input NG is indicated, inspect again that the N position mark is correct.
     — If it is incorrect, adjust the manual shaft.
   - If input OK is indicated, turn the ignition switch off and the shift the selector lever to P position. Turn the ignition switch to the ON position **after 5 s**.
8. Shift the selector lever from P position to D range, then verify that the positions of the selector lever and the indicator are aligned.
   - If there is any malfunction, inspect the DTC. (See 05–02B–5 DTC TABLE [AW6A-EL].)

OIL SEAL (MANUAL SHAFT) REPLACEMENT [AW6A-EL]

E6U051700000W04

Caution
- **Water or foreign material entering the connector can cause a poor connection or corrosion. Be sure not to allow water or foreign material on the connector when disconnecting.**

1. Disconnect the negative battery cable.
2. Remove the air cleaner component. (See 01–13C–2 INTAKE AIR SYSTEM REMOVAL/INSTALLATION [AJ].)
3. Remove the TCM. (See 05–17B–25 TCM REMOVAL/INSTALLATION [AW6A-EL].)

Caution
- **Do not damage the transaxle case.**
- **Do not damage the manual shaft.**

4. Remove and discard the oil seal using a tape-wrapped flathead screwdriver.

Caution
- **Do not damage the oil seal.**

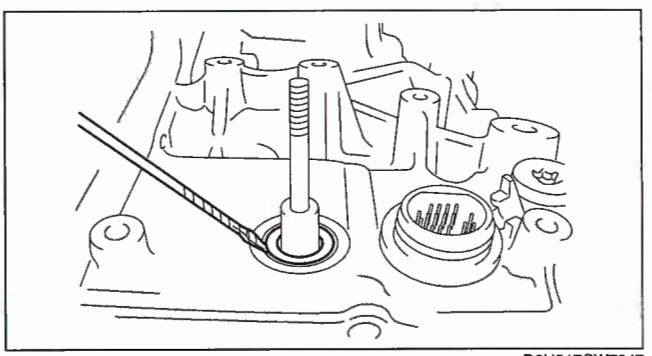

D6U517CW7047

5. Using the **SST** and a hammer, tap a new oil seal so that the specified oil seal position is obtained.
6. Install the TCM. (See 05–17B–25 TCM REMOVAL/INSTALLATION [AW6A-EL].)
   Install the air cleaner component. (See 01–13C–2 INTAKE AIR SYSTEM REMOVAL/INSTALLATION [AJ].)
8. Connect the negative battery cable.

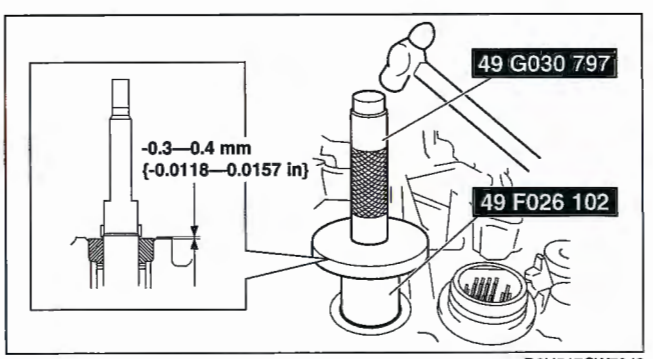

D6U517CW7048

AUTOMATIC TRANSAXLE REMOVAL/INSTALLATION [AW6A-EL]

E6U051700000W05

1. Disconnect the negative battery cable.
2. Remove the battery and battery tray.
3. Remove the air cleaner component and air cleaner bracket. (See 01–13C–2 INTAKE AIR SYSTEM REMOVAL/INSTALLATION [AJ].)
4. Remove the starter. (See 01–19A–2 STARTER REMOVAL/INSTALLATION [L3, AJ].)
5. Separate the heater pipe.
6. Remove the front tires and splash shield.
7. Remove the under cover.
8. Remove the steering gear and linkage, and pipe assembly installation bolts from the front crossmember, and then suspend the steering gear and linkage with a cable. (See 06–12–13 STEERING GEAR AND LINKAGE REMOVAL/INSTALLATION [AJ].)

   Pipe assembly tightening torque
   7.8—10.8 N·m {79.6—110.0 kgf·cm, 69.1—95.5 in·lbf}

9. Drain the ATF. (See 05–17B–12 AUTOMATIC TRANSAXLE FLUID (ATF) REPLACEMENT [AW6A-EL].)

   Warning
   - **Improperly jacking a transaxle is dangerous. It can slip off the jack and may cause serious injury.**

   Caution
   - **To prevent the torque converter and transaxle from separating, remove the transaxle without tilting it toward the torque converter.**

10. Remove in the order shown in the figure.
11. Install in the reverse order of removal.
12. Add ATF to the specified level. (See 05–17B–12 AUTOMATIC TRANSAXLE FLUID (ATF) REPLACEMENT [AW6A-EL].)
13. Perform the mechanical system test. (See 05–17B–3 MECHANICAL SYSTEM TEST [AW6A-EL].)

Service item	Test item		
	Line pressure test	Stall test	Time lag test
ATX replacement	X		
Torque converter replacement	X	X	
Control valve body component	X		

X : Test to be performed after the service work

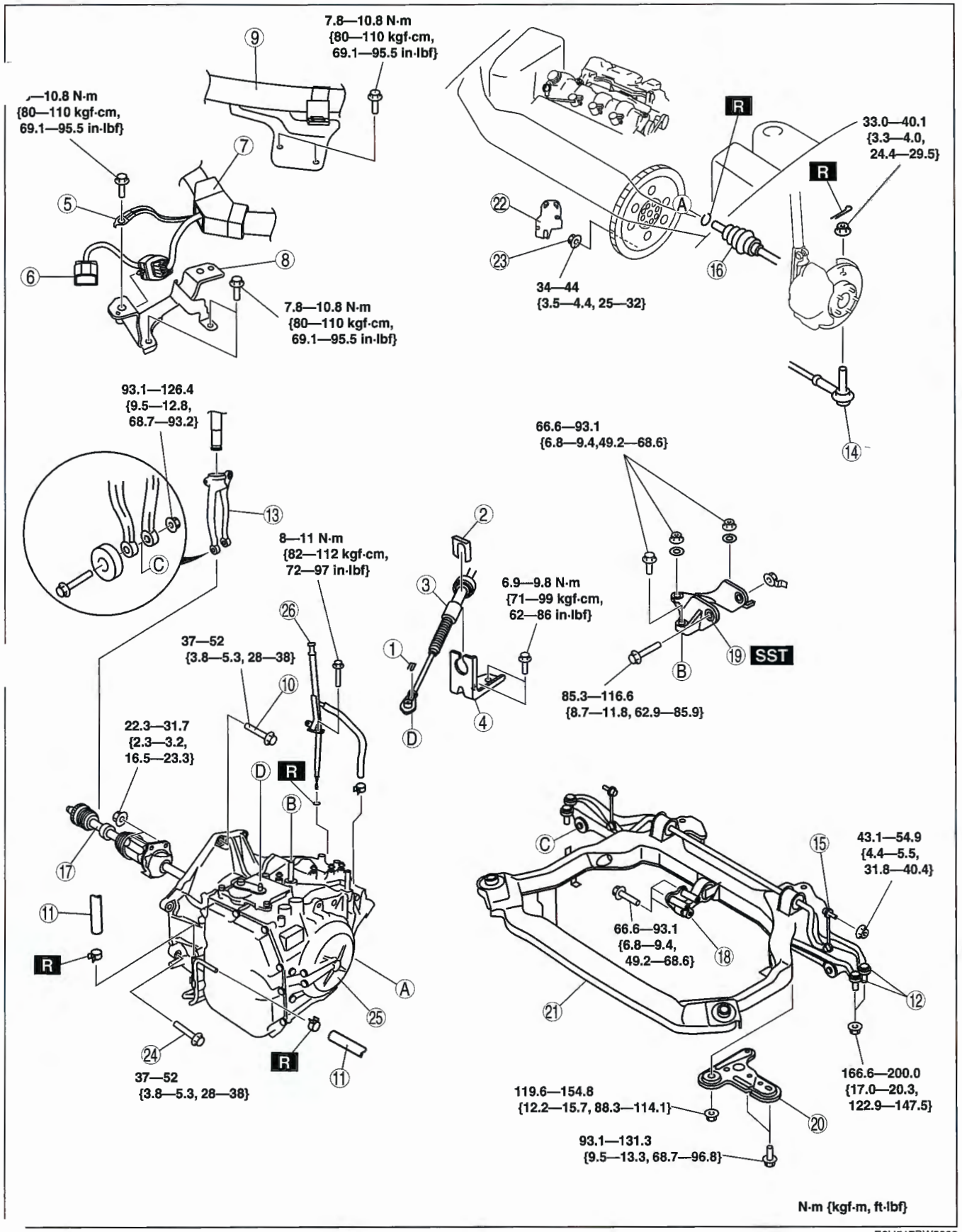

E6U517BW5002

1	Clip
2	Clip

3	Selector cable (See 05–17B–37 Selector Cable Installation Note.)
4	Cable bracket

5	GND harness
6	TCM connector
7	Wiring harness component
8	Wiring harness bracket
9	Wiring harness component, wiring harness bracket
10	Transaxle mounting bolt (Upper side)
11	Oil hose
12	Lower arm (front, rear) ball joint (See 02–13–11 Front Lower Arm (Front) Ball Joint Removal Note.)
13	Damper fork (right side)
14	Tie-rod end ball joint (See 06–12–13 STEERING GEAR AND LINKAGE REMOVAL/INSTALLATION [AJ].)
15	Stabilizer control link
16	Drive shaft (See 03–13–19 FRONT DRIVE SHAFT REMOVAL/INSTALLATION [AJ].)
17	Drive shaft, joint shaft (See 03–13–19 FRONT DRIVE SHAFT REMOVAL/INSTALLATION [AJ].)
18	No.1 engine mount (See 05–17B–36 No.1 Engine Mount Installation Note.)
19	No.4 engine mount (See 05–17B–32 No.4 Engine Mount Bracket Removal Note.) (See 05–17B–36 No.4 Engine Mount Bracket Installation Note.)
20	Crossmember bracket
21	Crossmember (See 02–13–20 FRONT CROSSMEMBER REMOVAL/INSTALLATION.)
22	Endplate cover
23	Torque converter installation nuts (See 05–17B–34 Torque Converter Nuts Removal Note.) (See 05–17B–35 Torque Converter Nuts Installation Note.)
24	Transaxle mounting bolt (lower side)
25	Transaxle (See 05–17B–34 Transaxle Removal Note.) (See 05–17B–35 Transaxle Installation Note.)
26	Oil filter tube, Dipstick, breather hose (See 05–17B–35 Breather Hose Installation Note.)

No.4 Engine Mount Bracket Removal Note

1. Remove the ABS/TCS HU/CM connector. (See 04–13–4 ABS/TCS HU/CM REMOVAL/INSTALLATION.)
2. Remove the dynamic chamber. (See 01–13C–2 INTAKE AIR SYSTEM REMOVAL/INSTALLATION [AJ].)
3. Using the bolts **M12×1.25, length 25 mm {0.984 in}** to Install the **SST** as shown (LH bank and RH bank).

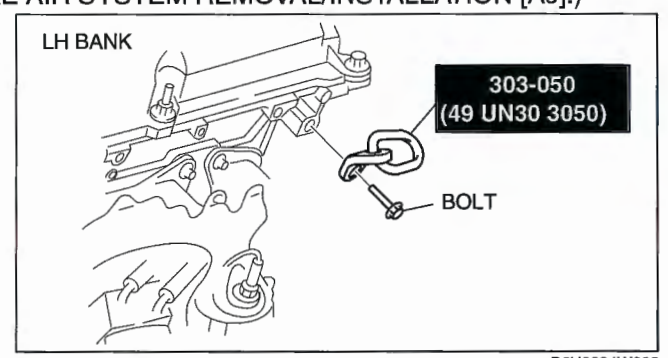

B6U2324W002

Tightening torque
100—125 N·m {10.2—12.7 kgf·m, 73.8—92.1 ft·lbf}

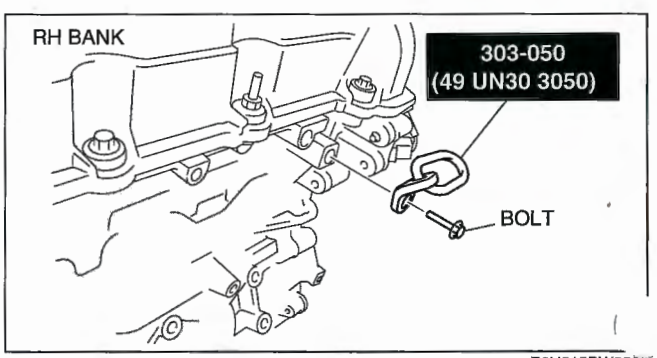

E6U515BW5502

4. Install the **SST** using the following procedure.

Caution
- **Refer to the SST instruction manual for the basic handing procedure.**

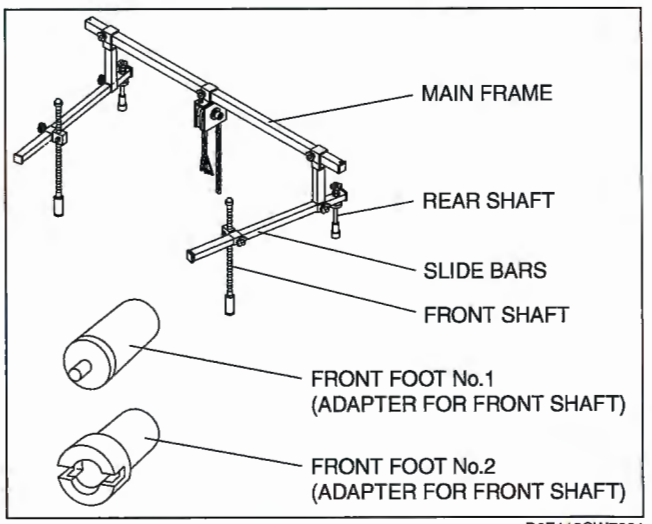

D6E110CW7001

(1) Install the right rear shaft of the **SST** to the bolt of the right shock absorber as shown in the figure.
(2) Install the left rear shaft of the **SST** to the bolt of the left shock absorber. (Identical position to the right side)

Caution
- **When setting the SST on the right side, make sure it doesn't interfere with the ABS/TCS HU/CM.**

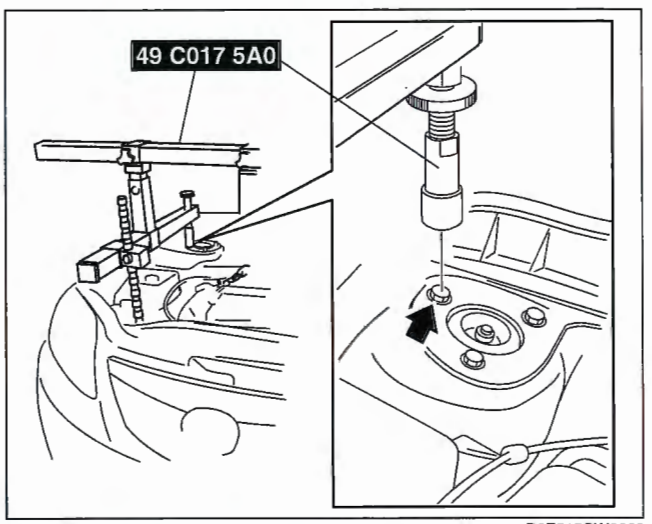

D6E515CW3008

(3) Install the left/right front shaft of the **SST** with front foot No.2 to the bolt as shown in the figure.

* : If equipped

(4) Adjust the positions of the **SST** side bars so that they are the same height (left and right) and horizontal.
(5) Make sure each joint is securely tightened.

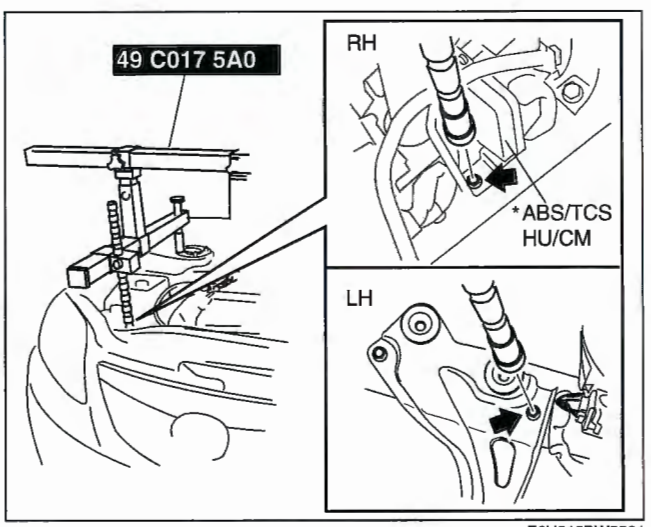

E6U515BW5501

5. Support the engine using the **SST**.

Note
- The **SST** (49 E017 5A0) can be used in place of the **SST** (49 C017 5A0).

6. Remove the No.4 engine mount bracket.

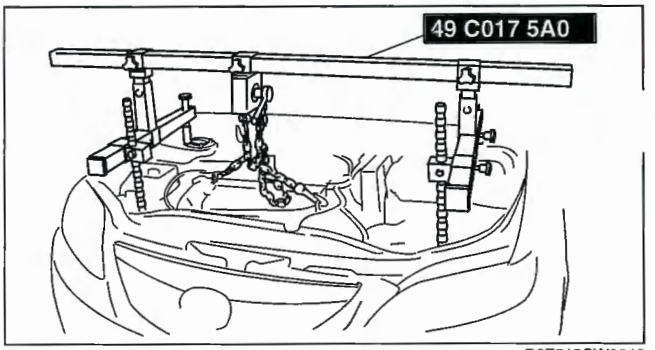

D6E515CW3010

Torque Converter Nuts Removal Note
1. Align the holes by turning the torque converter.
2. Insert a flathead screwdriver through the converter housing service hole, and lock the drive plate.

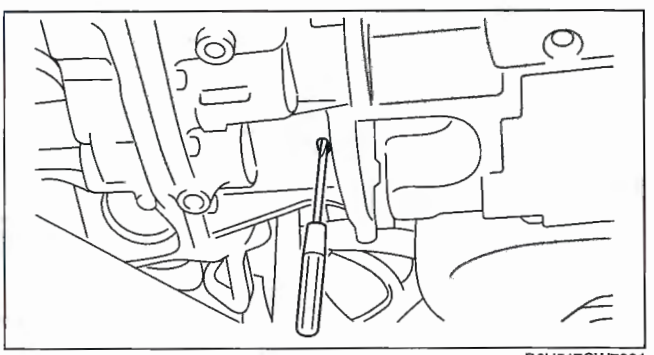
D6U517CW7031

3. Remove the torque converter nuts.

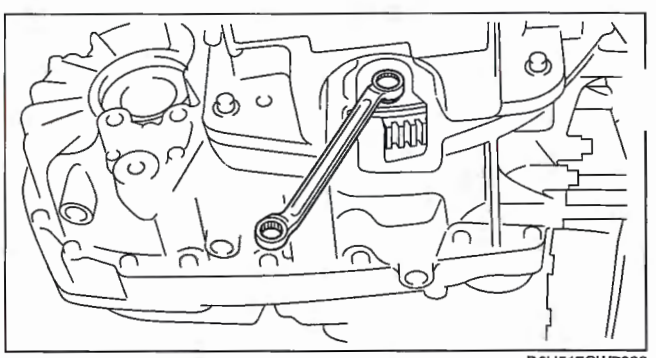
D6U517CW7032

Transaxle Removal Note
1. Support the transaxle on a jack.
2. Remove the transaxle mounting bolts.
3. Remove the transaxle.

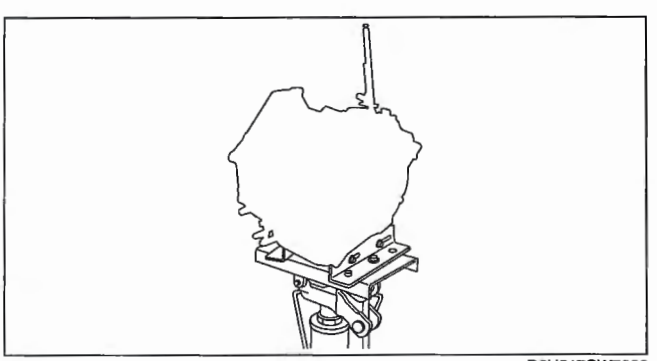
D6U517CW7033

Breather Hose Installation Note

1. Make sure the breather hose is inserted till the position as shown in the figure.
2. Install the hose clamp with in the marked area.

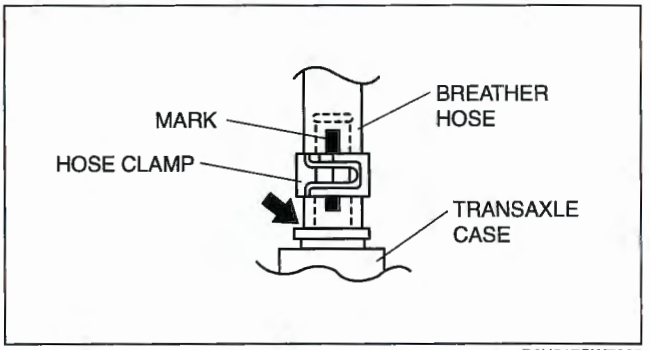

D6U517CW7095

Transaxle Installation Note

1. Set the transaxle on a jack and lift it.
2. Install the transaxle mounting bolts.

Tightening torque
37—52 N·m {3.8—5.3 kgf·m, 28—38 ft·lbf}

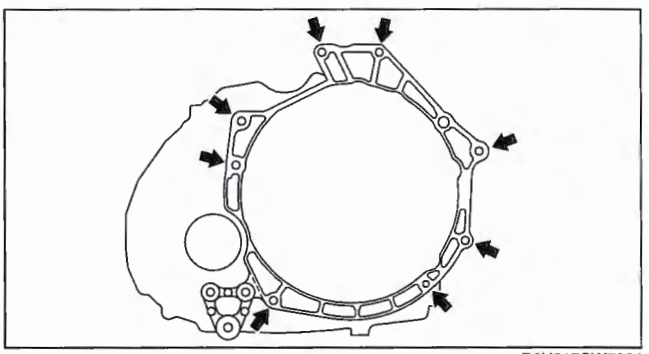

D6U517CW7034

rque Converter Nuts Installation Note

1. Align the holes by turning the torque converter.
2. Insert a screwdriver through the converter housing service hole, and lock the drive plate.

Caution
- **Loosely and equally tighten the torque converter nuts, then further tighten them to the specified tightening torque.**

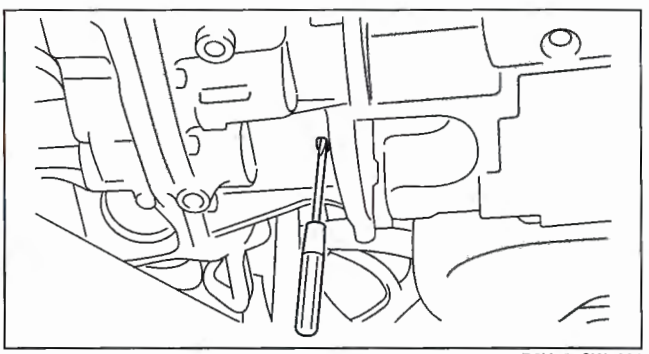

D6U517CW7031

3. Tighten the torque converter mounting nuts.

Tightening torque
34—44 N·m {3.5—4.4 kgf·m, 25—32 ft·lbf}

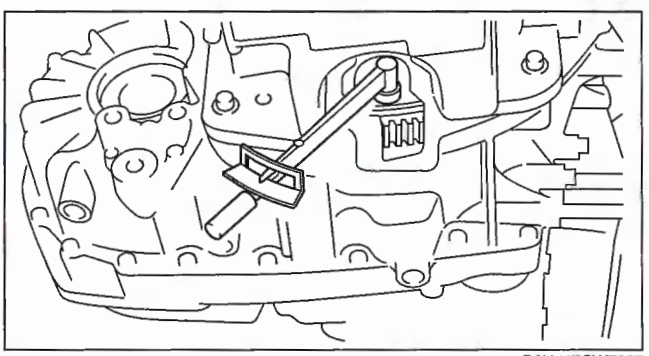

D6U517CW7037

No.4 Engine Mount Bracket Installation Note

1. Verify that the No.4 engine mount bracket is installed as shown in the figure.
2. Temporarily tighten bolt D.

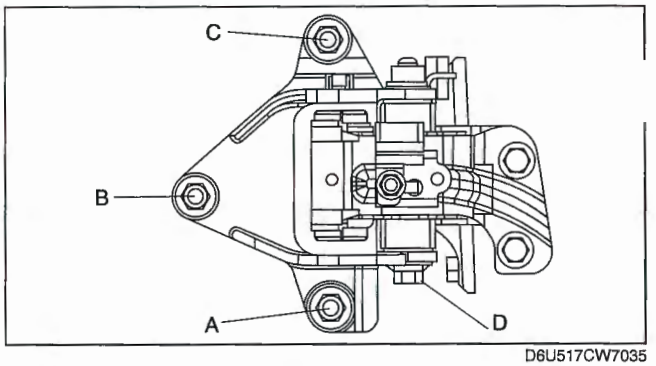

D6U517CW7035

3. Set the transaxle on a garage jack and lift it upward.
4. Align the hole of the No.4 engine mount bracket with the stud bolts of transaxle.

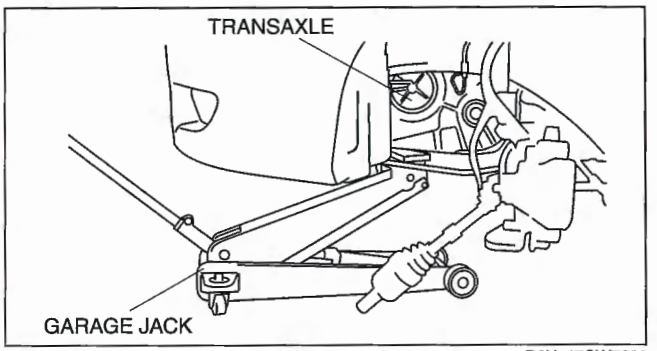

D6U517CW7036

5. Temporarily tighten bolt A and nuts B, C.
6. Tighten nuts B and C in the order of B→C, and then bolt A.
7. Tighten bolt D.

Tightening torque
A, B, C: 66.6—93.1 N·m {6.8—9.4 kgf·m, 49.2—68.6 ft·lbf}
D: 85.3—116.6 N·m {8.7—11.8 kgf·m, 62.9—85.9 ft·lbf}

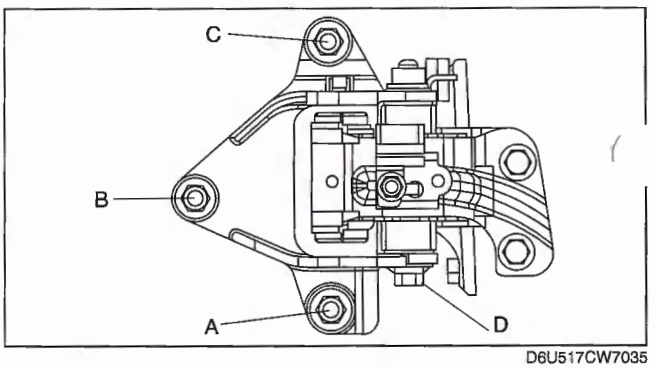

D6U517CW7035

No.1 Engine Mount Installation Note

1. Align the hole of the No.1 engine mount rubber with the bolt hole of the transaxle.
2. Temporarily tighten bolt A, then tighten bolts B, C.
3. Tighten bolt A.

Tightening torque
66.6—93.1 N·m {6.8—9.4 kgf·m, 49.2—68.6 ft·lbf}

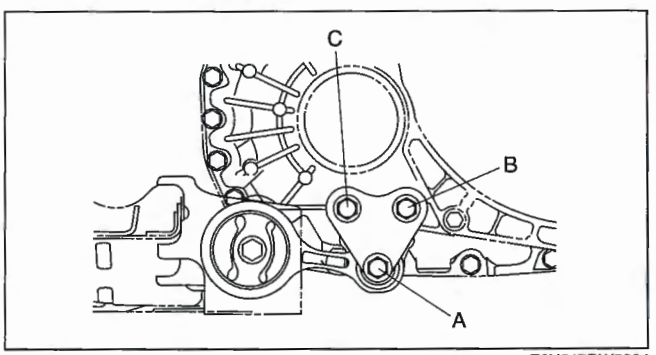

E6U517BW5004

Selector Cable Installation Note

1. Install the selector lever to the manual shaft lever so that no load acts on the selector cable.

   Note
   - Install the selector lever to the manual shaft lever with the clip side of the selector cable end facing up.

2. Confirm that the tip of the manual shaft lever projects out of the end of the selector cable.

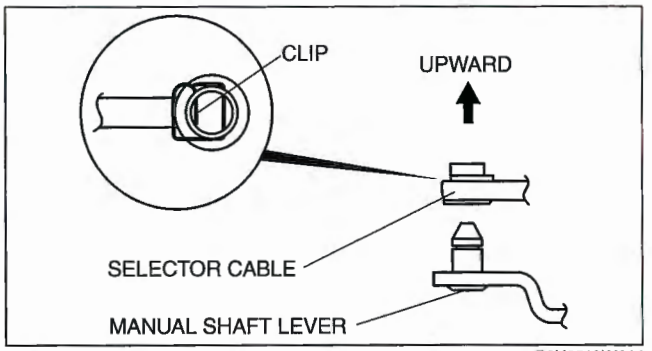

B6U0518W014

OIL SEAL (DIFFERENTIAL) REPLACEMENT [AW6A-EL]

E6U051727238W01

1. Disconnect the negative battery cable.
2. Remove the air cleaner component. (See 01–13C–2 INTAKE AIR SYSTEM REMOVAL/INSTALLATION [AJ].)
3. Remove the under cover.
4. Drain the ATF. (See 05–17B–12 AUTOMATIC TRANSAXLE FLUID (ATF) REPLACEMENT [AW6A-EL].)

   Caution
   - **The oil seal is easily damaged by the sharp edges of the drive shaft splines. Do not let the splines contact the oil seal.**

5. Remove the drive shaft and joint shaft (See 03–13–5 JOINT SHAFT REMOVAL/INSTALLATION [AJ].) (See 03–13–19 FRONT DRIVE SHAFT REMOVAL/INSTALLATION [AJ].)

   Caution
   - **Do not damage the transaxle case.**
   - **Do not damage the differential case.**

Remove the oil seal lip using a razor.

. Remove and discard the oil seal using a tape-wrapped flathead screwdriver.

   Caution
   - **Do not damage the oil seal.**

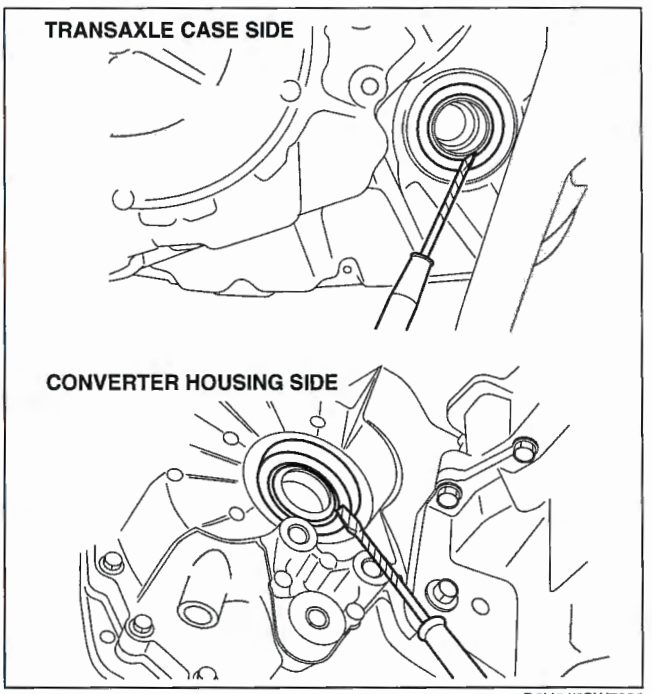

D6U517CW7096

8. Using the **SST** and a hammer, tap a new oil seal so that the specified oil seal position is obtained.
9. Install the drive shaft and joint shaft. (See 03–13–5 JOINT SHAFT REMOVAL/INSTALLATION [AJ].) (See 03–13–19 FRONT DRIVE SHAFT REMOVAL/INSTALLATION [AJ].)
10. Add ATF to the specified level. (See 05–17B–12 AUTOMATIC TRANSAXLE FLUID (ATF) REPLACEMENT [AW6A-EL].)
11. Install the air cleaner component. (See 01–13C–2 INTAKE AIR SYSTEM REMOVAL/INSTALLATION [AJ].)
12. Connect the negative cable.
13. Perform the mechanical system test. (See 05–17B–3 MECHANICAL SYSTEM TEST [AW6A-EL].)

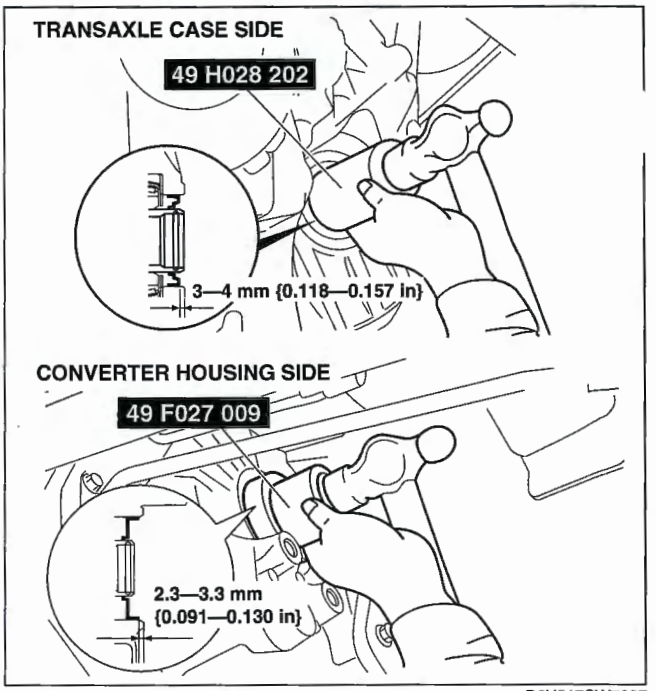

D6U517CW7097

DIFFERENTIAL GEAR O-RING REPLACEMENT [AW6A-EL]

E6U051727238W02

Caution
- **The O-ring is easily damaged by the sharp edges of the drive shaft splines. Do not let the splines contact the O-ring.**

1. Remove the drive shaft and joint shaft. (See 03–13–5 JOINT SHAFT REMOVAL/INSTALLATION [AJ].) (See 03–13–19 FRONT DRIVE SHAFT REMOVAL/INSTALLATION [AJ].)

Caution
- **Do not damage the differential case.**

2. Remove and discard the O-ring using a tape-wrapped flathead screwdriver.

Caution
- **Do not damage the O-ring.**
- **Do not damage the differential case.**

3. Apply ATF to a new O-ring and install it to the differential case.
4. Install the drive shaft and joint shaft. (See 03–13–5 JOINT SHAFT REMOVAL/INSTALLATION [AJ].) (See 03–13–19 FRONT DRIVE SHAFT REMOVAL/INSTALLATION [AJ].)

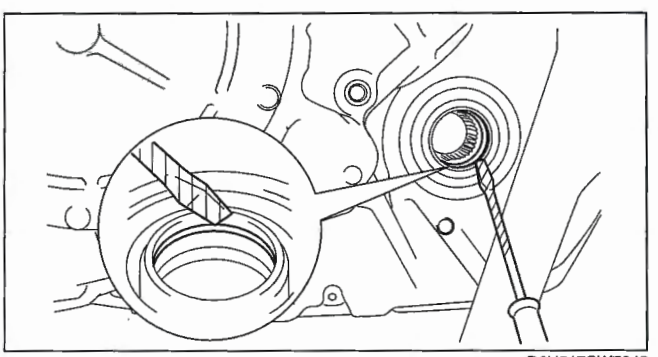

D6U517CW7049

CONTROL VALVE BODY REMOVAL/INSTALLATION [AW6A-EL]

E6U051721100W01

On-Vehicle Removal

Warning
- **Using compressed air can cause dirt and other particles to fly out, causing injury to the eyes. Wear protective eyeglasses whenever using compressed air.**

Caution
- **Clean the transaxle exterior throughout with a steam cleaner or cleaning solvents before removal.**
- **If any old sealant gets into the transaxle during installation of the control valve body cover, trouble may occur in the transaxle case and control valve body cover. Clean with cleaning fluid.**

1. Disconnect the negative battery cable.
2. Remove the air cleaner component and air cleaner bracket. (See 01–13C–2 INTAKE AIR SYSTEM REMOVAL/INSTALLATION [AJ].)
3. Place the heater pipe out of the way.
4. Remove the under cover.
5. Drain the ATF. (See 05–17B–12 AUTOMATIC TRANSAXLE FLUID (ATF) REPLACEMENT [AW6A-EL].)
6. Drain the engine coolant. (See 01–12A–5 ENGINE COOLANT REPLACEMENT [L3, AJ].)
7. Disconnect the lower radiator hose and place the lower radiator hose out of the way.
8. Remove the oil hose, oil pipe and O-ring. (See 05–17B–49 OIL COOLER REMOVAL/INSTALLATION [AW6A-EL].)
9. Remove the front crossmember. (See 02–13–20 FRONT CROSSMEMBER REMOVAL/INSTALLATION.)
10. Remove the control valve body cover installation bolt.

Caution
- **Do not damage the fitting surface of the transaxle case and the control valve body cover.**
- **Do not deform the control valve body cover.**

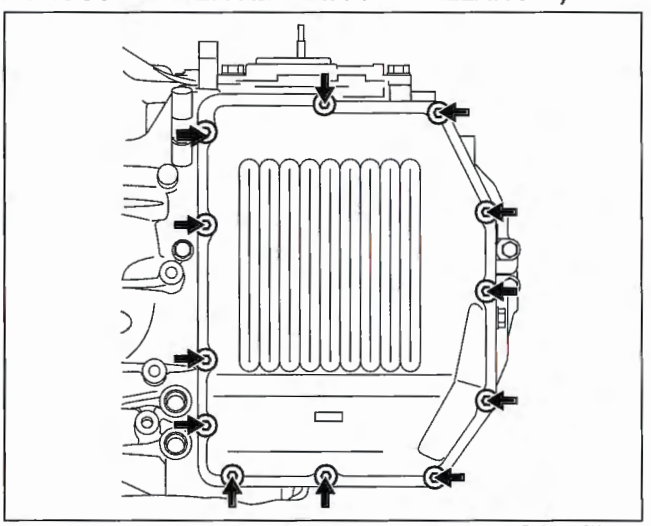

D6U517CW7065

11. Using a plastic hammer, tap the control valve body cover to remove it.

Caution
- **Be careful not to damage the solenoid valves and connectors.**
- **Do not pull the wiring harnesses when removing the connector.**

Note
- Disconnect the solenoid connector according to the following procedure:

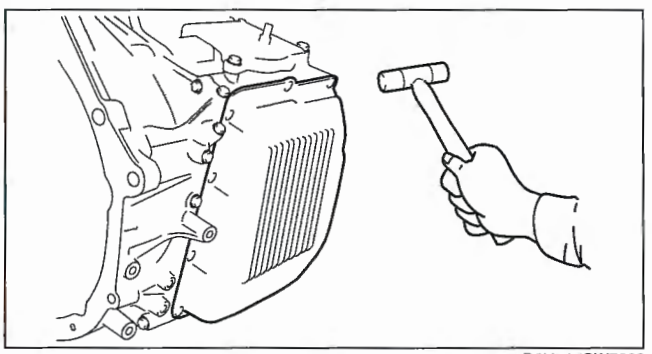

D6U517CW7066

1. Insert a precision screwdriver from the backside into the connector as shown in the figure.

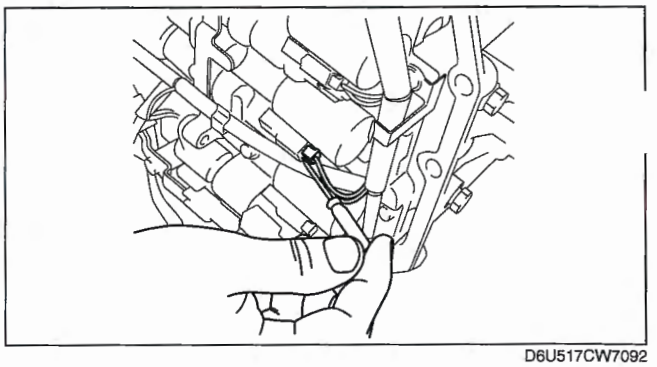

D6U517CW7092

2. Pry the screwdriver in the direction of the arrow and disconnect the connector.

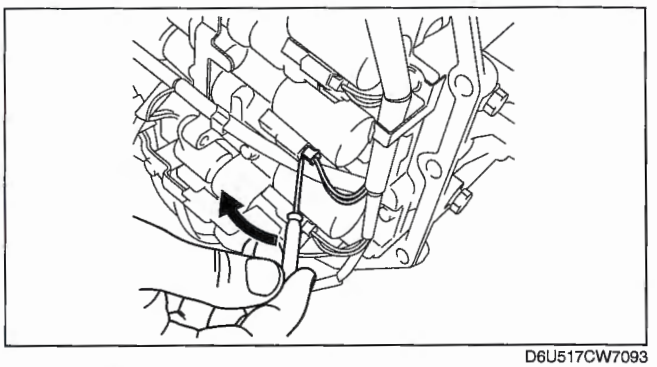

D6U517CW7093

Caution

- **Do not damage the solenoid valves and connectors with the screwdriver.**
- **When disconnecting connectors, grasp the connectors, not the harnesses. Otherwise, the harnesses may be pulled out of the connector causing poor contact.**

12. Disconnect the solenoid connectors, VSS connector and the input/turbine speed sensor connector.
13. Disconnect the coupler component from the clamp.

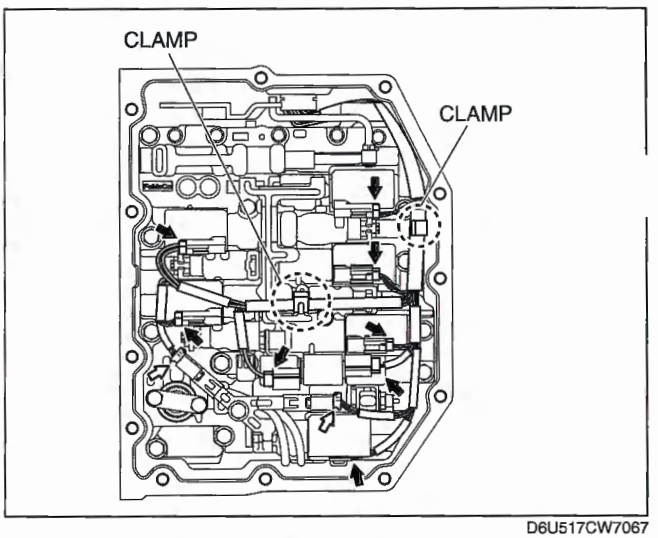

D6U517CW7067

14. Remove the lock plate, and pull out the TFT sensor from the control valve body.
15. Remove the O-ring from the TFT sensor.

Note

- Be sure to secure the coupler component with tape so that it will not interfere with the control valve body component.

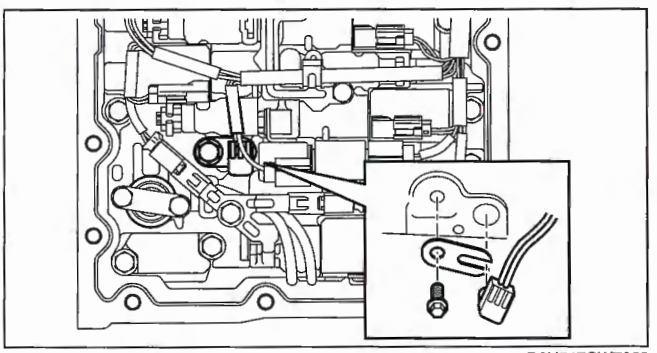

D6U517CW7068

16. Fix the coupler component with tape to the transaxle case as shown in the figure.
17. Remove the VSS connector and input/turbine speed sensor connector from the solenoid clamp.

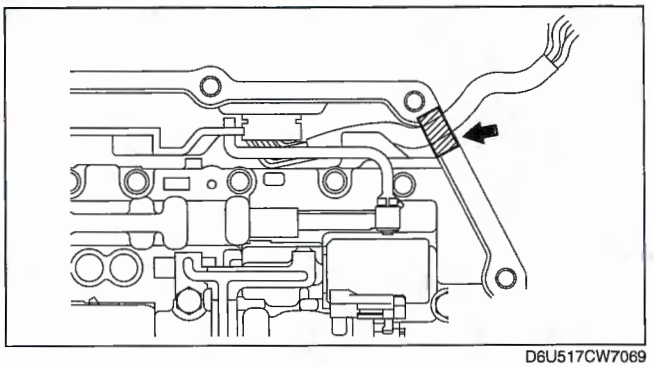

D6U517CW7069

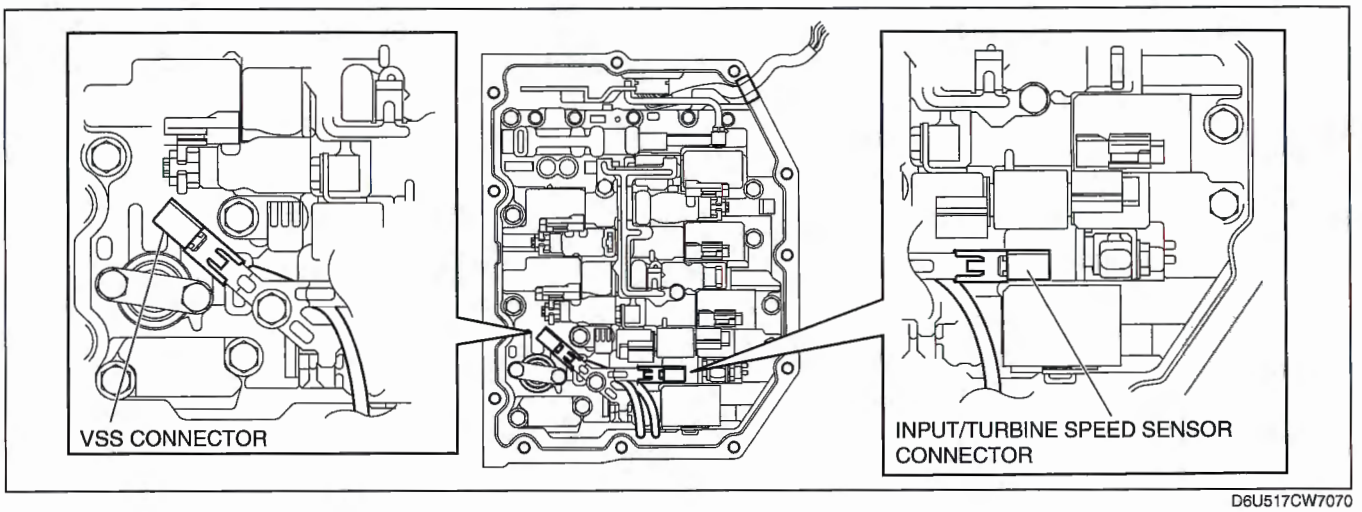

D6U517CW7070

Note

- Be sure to secure the VSS and input/turbine speed sensor with tape so that they will not interfere with the control valve body component.

18. Fix the VSS wiring harness and input/turbine speed sensor wiring harness with tape to the transaxle case as shown in the figure.

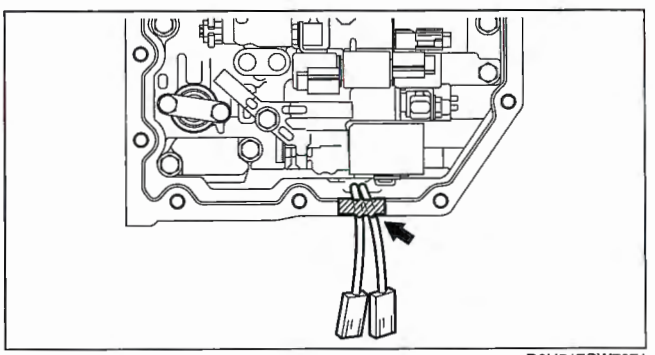

D6U517CW7071

19. Remove the suction cover and the gasket.

Caution
- **Evenly loosen the bolts a little at a time in the order shown in the figure.**

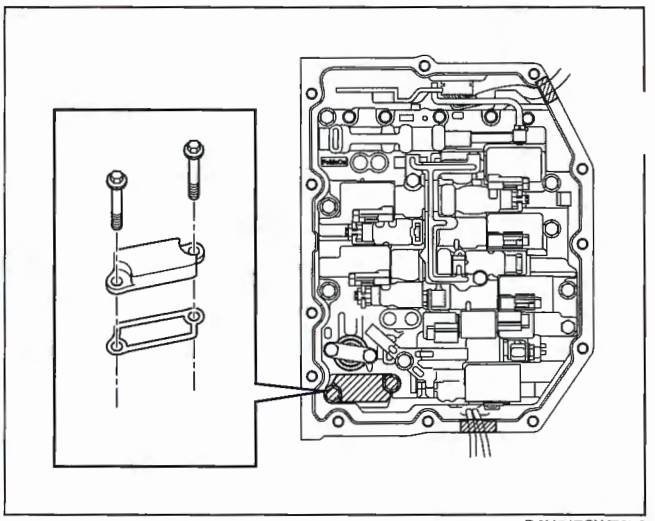

D6U517CW7072

20. Remove the control valve body installation bolts.

Caution
- **Do not drop the control valve body component.**

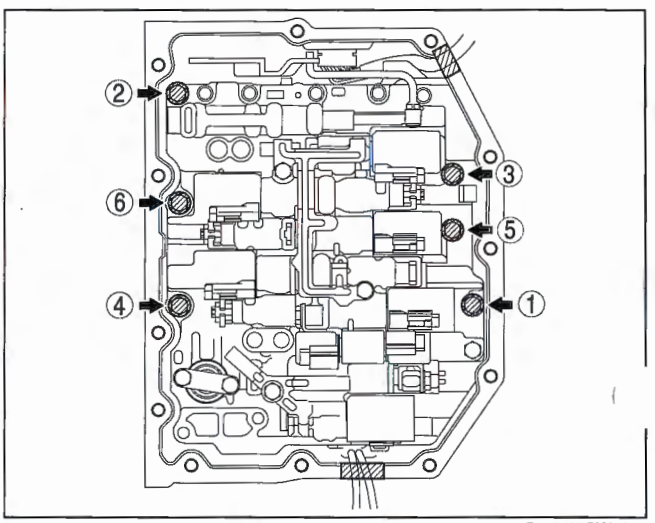

D6U517CW7073

21. Disconnect the manual valve link and remove the control valve body component.

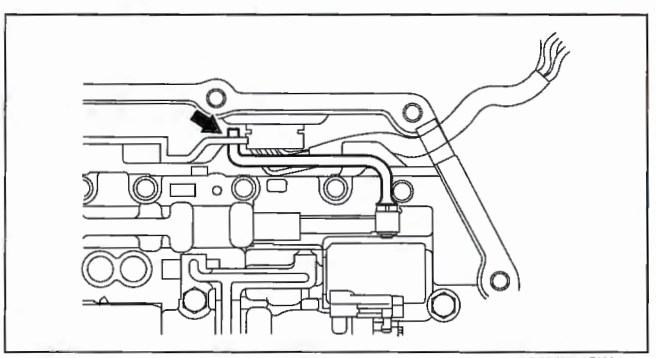

D6U517CW7074

On-Vehicle Installation

Caution
- **When installing the control valve body component, do not put the coupler component in the open space of the separate plate in the control valve body component.**
- **Do not pinch the coupler component between the separate plate and the control valve body component.**

1. Connect the manual valve link and install the control valve body component.

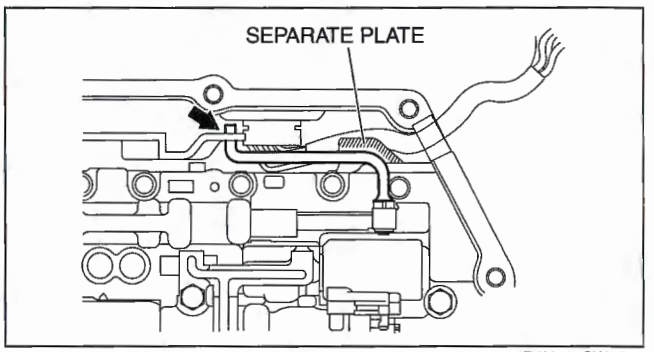

D6U517CW7075

2. Temporarily install the control valve body component with the bolts.

Bolt length (measured from below the head)
A: 31 mm {1.220 in}
B: 17 mm {0.669 in}
C: 21 mm {0.827 in}

Note
- Aligning the bolt holes, temporarily tighten the bolt by hand.

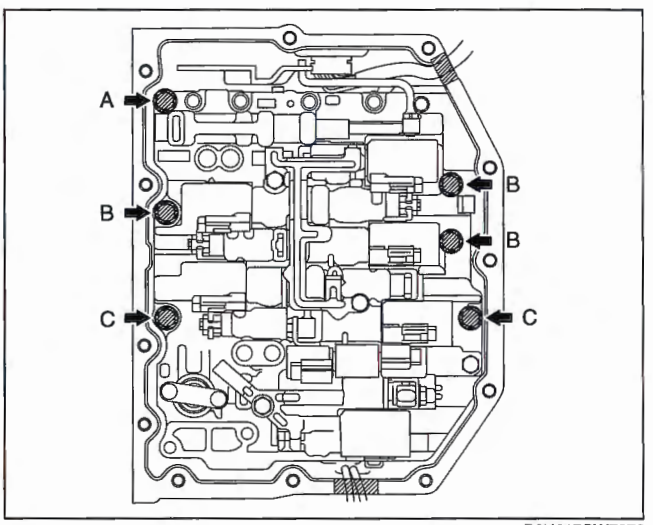

D6U517CW7076

3. Temporarily install the suction cover and a new gasket with the bolts.

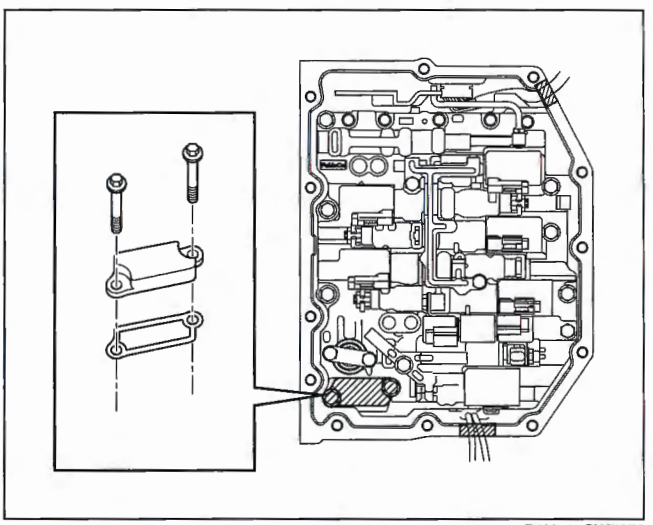
D6U517CW7072

4. Tighten the bolts in the order shown in the figure.

   Tightening torque
   8—12 N·m {82—122 kgf·cm, 72—105 in·lbf}

5. Install the connector of the VSS and input/turbine speed sensor to the solenoid clamp.

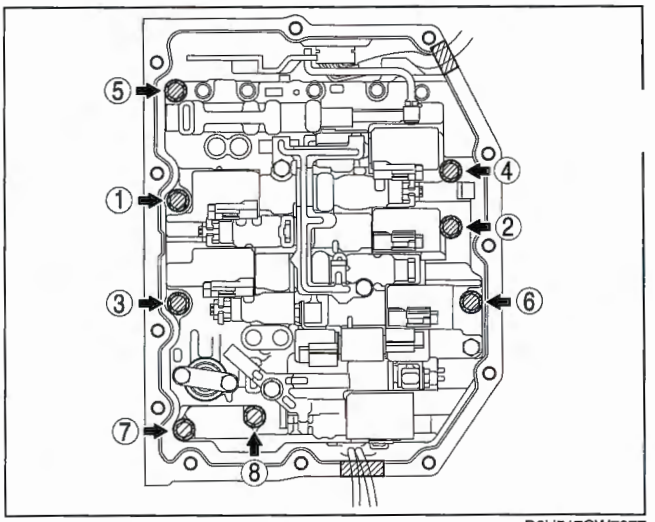

D6U517CW7077

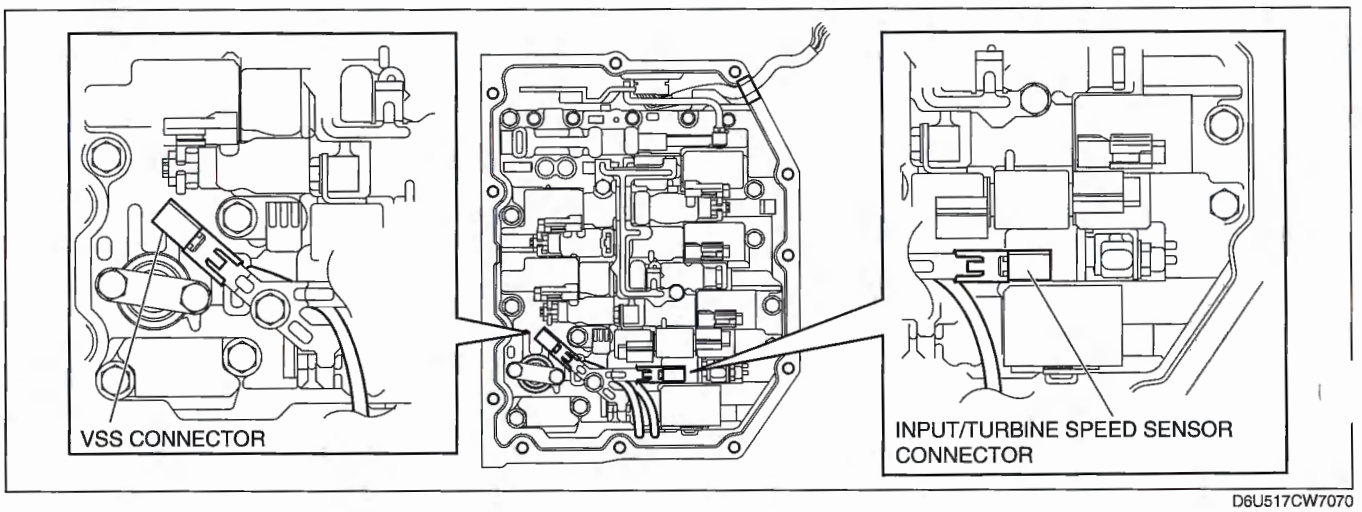

D6U517CW7070

Caution

- **If the control valve body cover is installed with the wiring harnesses overlapped, the wiring harnesses may be pinched between the cover and valve body causing the wiring harnesses to be damaged. Therefore, verify that the wiring harnesses are not overlapped when installing the control valve body cover.**

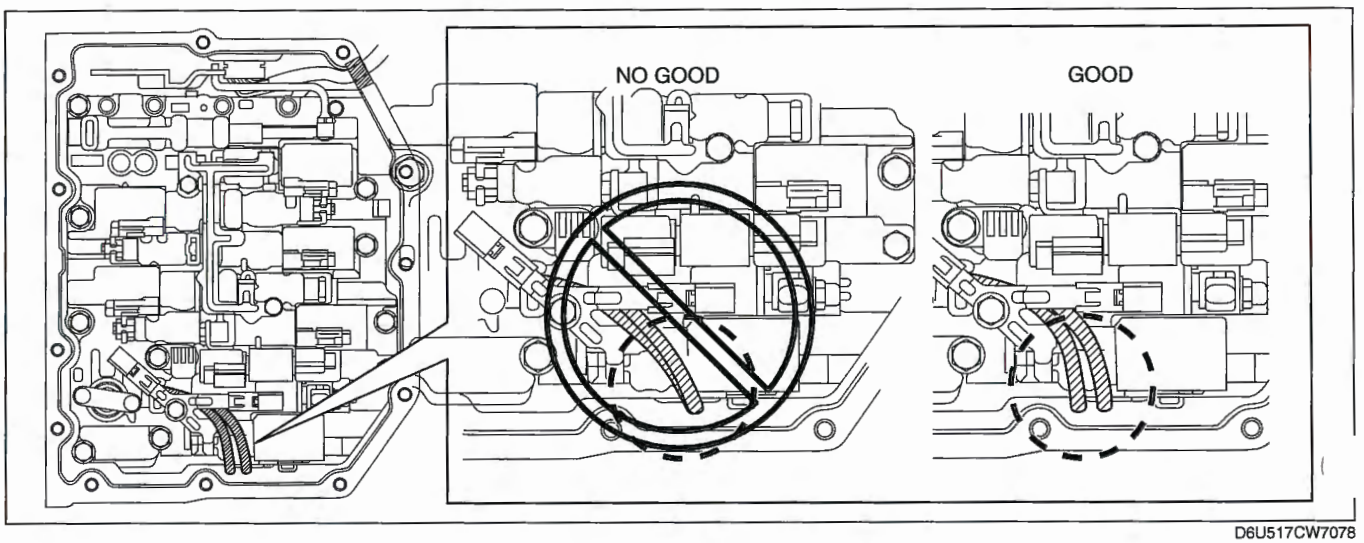

D6U517CW7078

6. Apply ATF to a new O-ring and install it on the TFT sensor.

7. Install the TFT sensor with the lock plate and a bolt to the control valve body component as shown in the figure.

   Tightening torque
   8—12 N·m {82—122 kgf·cm, 72—105 in·lbf}

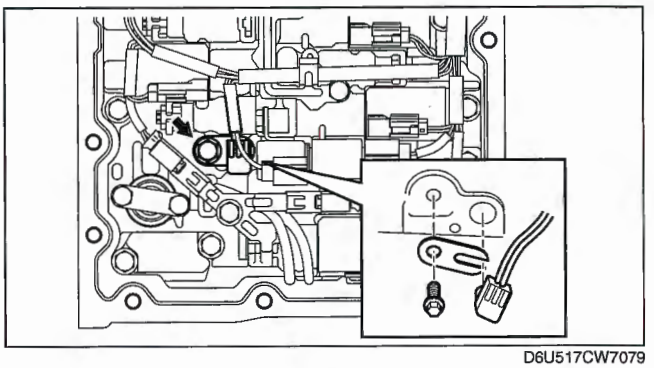
D6U517CW7079

8. Connect the solenoid connectors, VSS connector and the input/turbine speed sensor connector.

9. Connect the coupler component to the clamps.

   Note
   - Completely remove sealant and oil with white gasoline or similar.

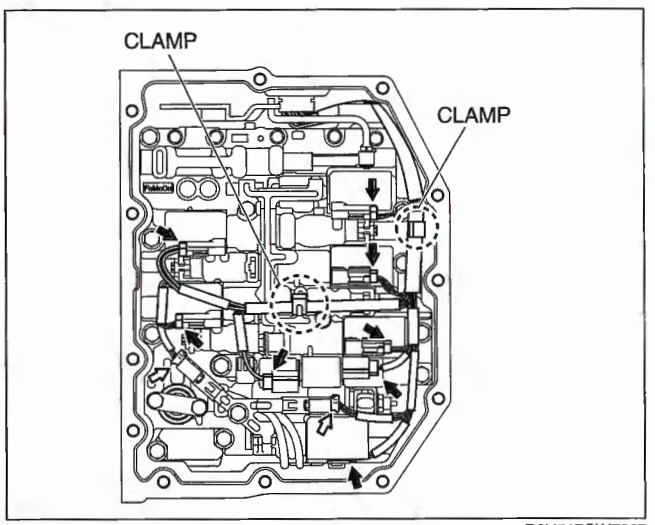

D6U517CW7067

Clean sealant and oil off the contact surface of the transaxle case with the control valve body cover and the bolt holes.

   Note
   - Completely remove oil with white gasoline or similar.

11. Clean oil off the contact surface of the new control valve body cover with the transaxle case.

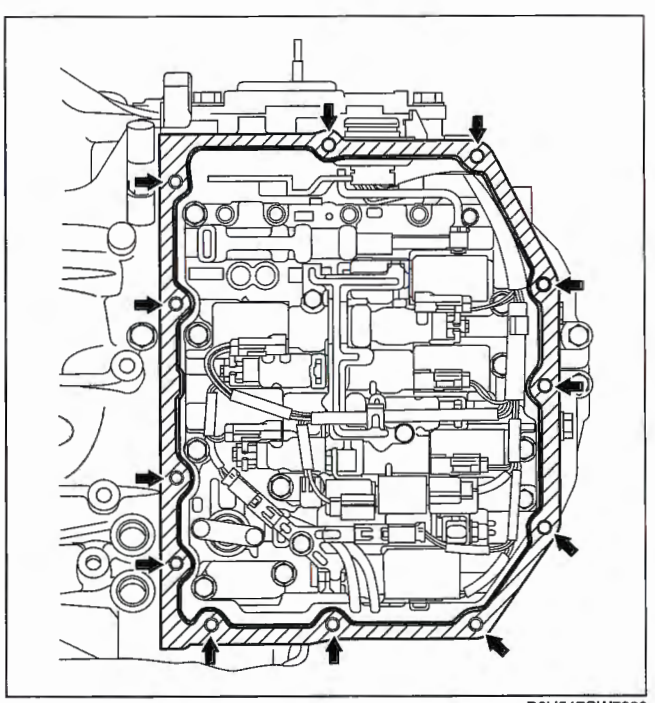
D6U517CW7080

12. Apply sealant to the new control valve body cover as shown in the figure.

Caution
- **Be careful that the coupler component will not become caught between the control valve body cover and transaxle case.**

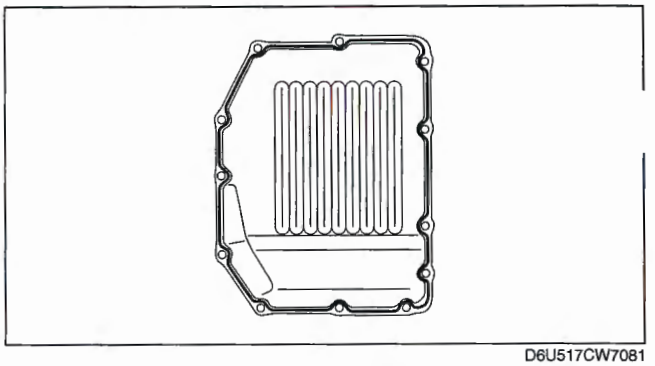
D6U517CW7081

13. Install the new control valve body cover with new seal bolts.

Tightening torque
9.8—15.7 N·m {100—160 kgf·cm, 87—138 in·lbf}

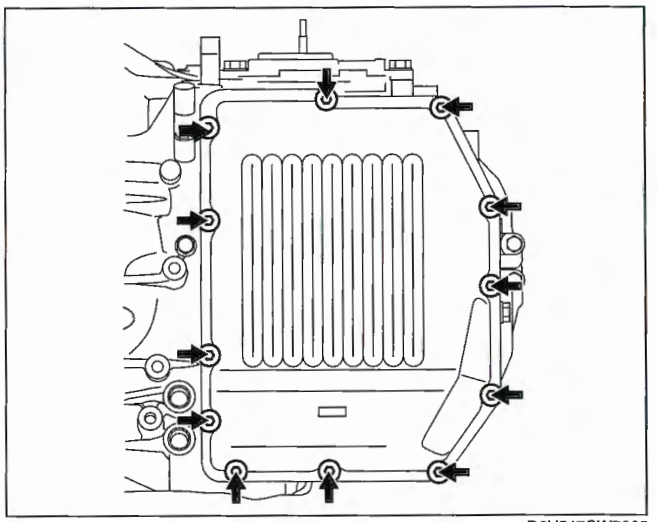
D6U517CW7065

14. Apply ATF to a new O-ring and install it on the oil pipe.
15. Install the oil pipe and oil hose. (See 05–17B–49 OIL COOLER REMOVAL/INSTALLATION [AW6A-EL].)
16. Connect the lower radiator hose.
17. Add the engine coolant. (See 01–12A–5 ENGINE COOLANT REPLACEMENT [L3, AJ].)
18. Add ATF to the specified level. (See 05–17B–12 AUTOMATIC TRANSAXLE FLUID (ATF) REPLACEMENT [AW6A-EL].)
19. Install the front crossmember. (See 02–13–20 FRONT CROSSMEMBER REMOVAL/INSTALLATION.)
20. Install the under cover.
21. Install the air cleaner component and air cleaner bracket. (See 01–13C–2 INTAKE AIR SYSTEM REMOVAL/INSTALLATION [AJ].)
22. Connect the negative battery cable.
23. Perform the mechanical system test. (See 05–17B–3 MECHANICAL SYSTEM TEST [AW6A-EL].)

TORQUE CONVERTER REMOVAL/INSTALLATION [AW6A-EL]

E6U051719100W01

1. Remove the transaxle. (See 05–17B–30 AUTOMATIC TRANSAXLE REMOVAL/INSTALLATION [AW6A-EL].)

Caution
- **The oil seal is easily damaged by the sharp edges of the torque converter splines. Do not let the splines contact the oil seal.**
- **Do not drop the torque converter.**
- **Do not pinch fingers.**

2. Remove the torque converter, and immediately turn it so that the hole faces upward. This will help to keep any remaining fluid from spilling.
3. Drain any ATF remaining in the torque converter.
4. Using a flathead screwdriver, position the drive gear on the oil pump component in the center.

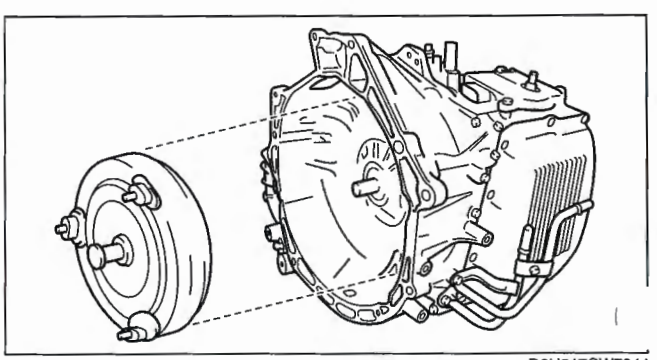
D6U517CW7044

5. Install the torque converter to the transaxle.

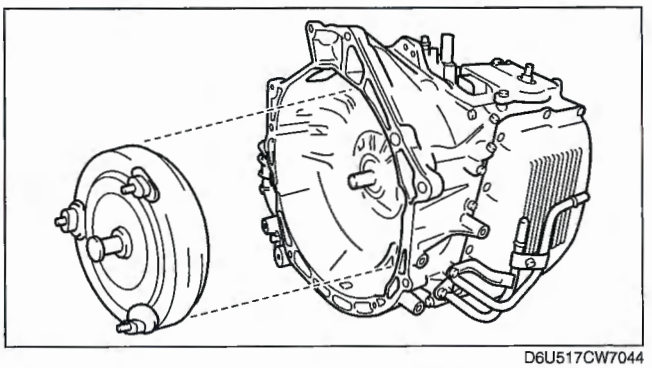

D6U517CW7044

6. To ensure that the torque converter is installed accurately, measure distance A between the end of the torque converter and the end of the converter housing.

Distance A
18 mm {0.709 in}

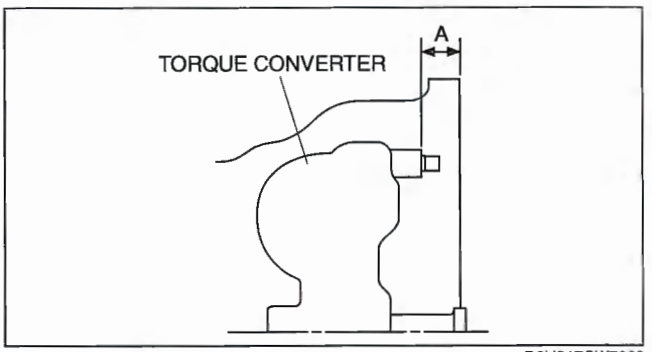

D6U517CW7060

7. Install the transaxle. (See 05–17B–30 AUTOMATIC TRANSAXLE REMOVAL/INSTALLATION [AW6A-EL].)
8. Perform the mechanical system test. (See 05–17B–3 MECHANICAL SYSTEM TEST [AW6A-EL].)

OIL SEAL (OIL PUMP) REPLACEMENT [AW6A-EL]

E6U051719100W02

1. Remove the transaxle. (See 05–17B–30 AUTOMATIC TRANSAXLE REMOVAL/INSTALLATION [AW6A-EL].)

Caution
- **The oil seal is easily damaged by the sharp edges of the torque converter splines. Do not let the splines contact the oil seal.**
- **Do not drop the torque converter.**
- **Do not pinch fingers.**

2. Remove the torque converter. (See 05–17B–46 TORQUE CONVERTER REMOVAL/INSTALLATION [AW6A-EL].)

Caution
- **Do not to damage the bushing on the oil pump body.**

3. Using a tape-wrapped flathead screwdriver, remove the oil seal from the oil pump body.

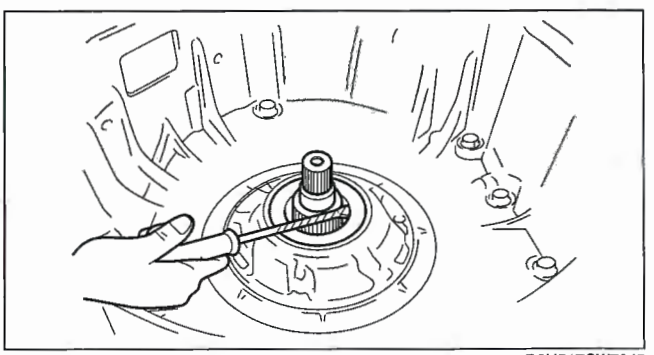

D6U517CW7045

4. Using the **SST** and a hammer, install the oil seal to the oil pump body.
5. Coat the lip of the oil seal with grease.
6. Install the torque converter. (See 05–17B–46 TORQUE CONVERTER REMOVAL/ INSTALLATION [AW6A-EL].)
7. Install the transaxle. (See 05–17B–30 AUTOMATIC TRANSAXLE REMOVAL/ INSTALLATION [AW6A-EL].)
8. Perform the mechanical system test. (See 05–17B–3 MECHANICAL SYSTEM TEST [AW6A-EL].)

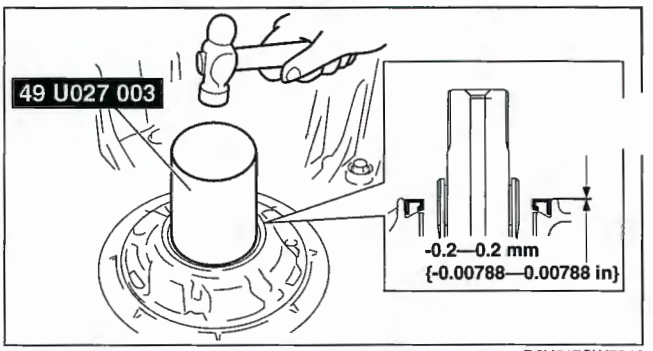

D6U517CW7046

OIL COOLER FLUSHING [AW6A-EL]

E6U051719900W01

Caution
- **Power flushing should be performed very carefully when removing the accumulated debris from the fluid baffle, otherwise the debris may not be removed or the problem may become even worse.**

Note
- The contaminated cooler line (oil pipes and hoses) and auxiliary cooler (if equipped) must be flushed completely when the ATX is overhauled or replaced.
- Performing back and reverse power flushing two times each does not work because debris or particles flow out from the feed pipe side of the ATX.

Recommended power-flushing manufacturer

Manufacturer	Part number	Description
Kent Moore	J35944-AMAZ	Flushing kit or equivalent
OTC	60081	Portable torque converter, oil cooler cleaner or equivalent

Power Flushing
Repair procedure
1. Before power flushing, inspect the hoses/lines and clamps. Power flushing must begin with back flushing followed by forward flushing to quickly dislodge the restriction. If back flushing is not performed before forward flushing, the restriction could further reduce the ATF flow through the internal mesh type baffle of the cooler and flushing will not be effective or possible.

Inspecting oil lines & clamps
1. Be sure to inspect the lines (hoses/pipes) for cuts, crimps (pinched), cracks or any other damage before reusing them. If any problem exists, replace.

Caution
- **Always use new clamps when replacing hoses.**

Back flushing
1. Following the power flushing equipment manufacturer's instructions, connect the equipment so the flushing fluid flows in the opposite direction of normal fluid flow.
2. Flush oil cooler/lines until discharge fluid is clean.

Caution
- **If the cooler can not be properly flushed using recommended equipment, send the radiator out for subcontractor cleaning or replace.**

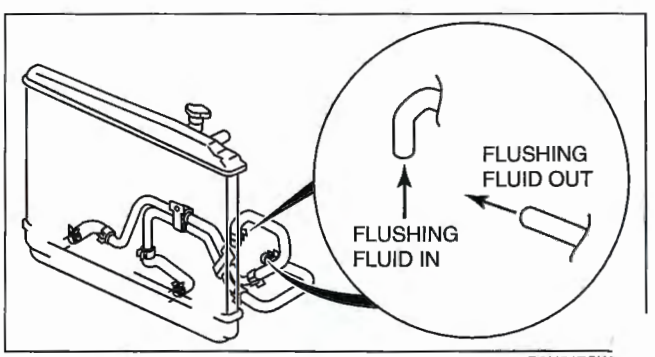

D6U517CW

Forward flushing

1. Connect power flushing equipment so the flushing fluid flows in the direction of normal fluid flow.
2. Flush oil cooler/lines until discharge fluid is clean.

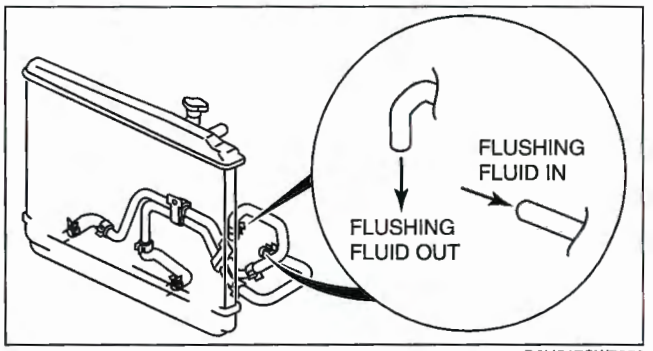

D6U517CW7052

OIL COOLER REMOVAL/INSTALLATION [AW6A-EL]

E6U051719900W02

1. Disconnect the negative battery cable.
2. Remove the air cleaner component. (See 01–13C–2 INTAKE AIR SYSTEM REMOVAL/INSTALLATION [AJ].)
3. Remove the under cover.
4. Drain the ATF into a container. (See 05–17B–12 AUTOMATIC TRANSAXLE FLUID (ATF) REPLACEMENT [AW6A-EL].)
5. Drain the engine coolant. (See 01–12A–5 ENGINE COOLANT REPLACEMENT [L3, AJ].)
6. Remove the following parts.
   (1) Hood (See 09–10–3 HOOD REMOVAL/INSTALLATION [EXCEPT L3 WITH TC].)
   (2) Front bumper (See 09–10–10 FRONT BUMPER REMOVAL/INSTALLATION.)
   (3) Front combination light (See 09–18–8 FRONT COMBINATION LIGHT REMOVAL/INSTALLATION.)
   (4) Front bumper reinforcement (See 09–10–13 FRONT BUMPER REINFORCEMENT REMOVAL/INSTALLATION.)
   (5) Shroud panel (See 09–10–17 SHROUD PANEL REMOVAL/INSTALLATION.)
   (6) Cooler pipe stay (See 07–11–17 CONDENSER REMOVAL/INSTALLATION [L3, AJ].)
   (7) Cooling fan (See 01–12A–12 COOLING FAN REMOVAL/INSTALLATION [L3, AJ].)
   (8) Engine coolant reserve hose

   Remove in the order indicated in the table.

. Install in the reverse order of removal.

9. Add the engine coolant. (See 01–12A–5 ENGINE COOLANT REPLACEMENT [L3, AJ].)
10. Add ATF to the specified level. (See 05–17B–12 AUTOMATIC TRANSAXLE FLUID (ATF) REPLACEMENT [AW6A-EL].)
11. Install the under cover.
12. Install the air cleaner component. (See 01–13C–2 INTAKE AIR SYSTEM REMOVAL/INSTALLATION [AJ].)
13. Connect the negative battery cable.
14. Inspect for oil leakage from the oil pipes and oil hoses.
15. Inspect for coolant from the hoses.
16. Inspect for engine coolant leakage. (See 01–12A–7 ENGINE COOLANT LEAKAGE INSPECTION [L3, AJ].)
17. Inspect the ATF level and condition. (See 05–17B–11 AUTOMATIC TRANSAXLE FLUID (ATF) INSPECTION [AW6A-EL].)
18. Perform the line pressure test. (See 05–17B–3 MECHANICAL SYSTEM TEST [AW6A-EL].)

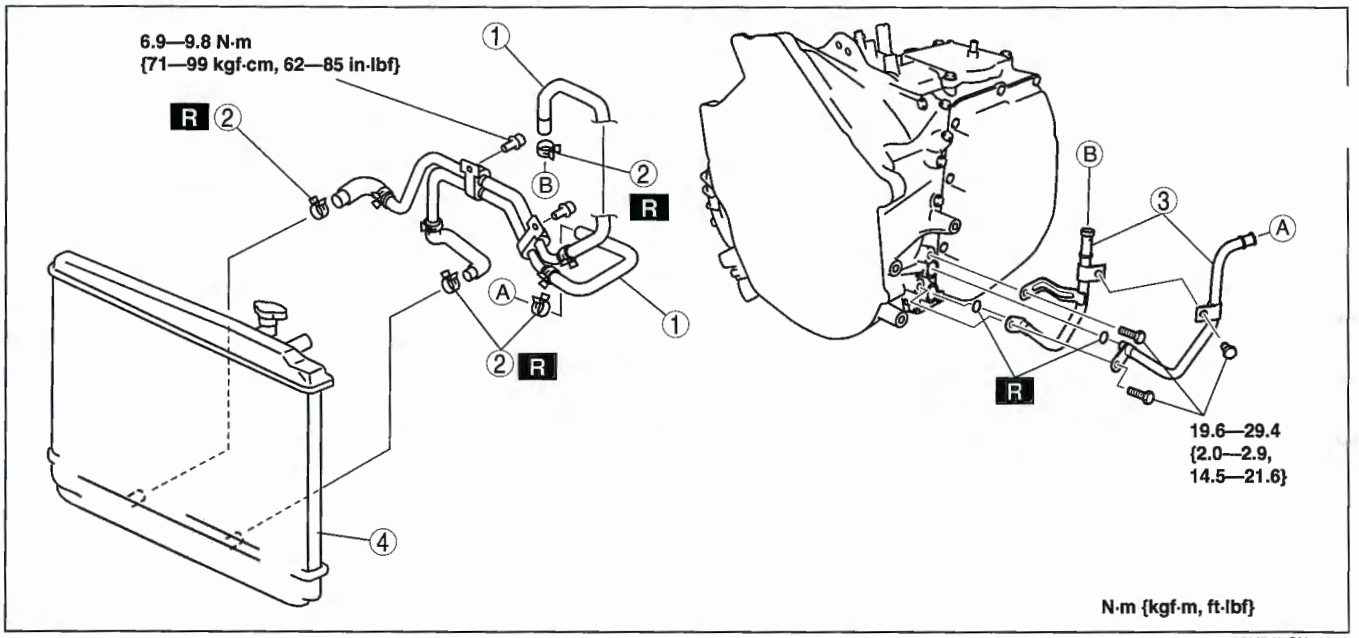

D6U517CW7053

1	Oil hose (See 05–17B–51 Oil Pipe, Hose Clamp, Oil Hose Installation Note.)
2	Hose clamp (See 05–17B–51 Oil Pipe, Hose Clamp, Oil Hose Installation Note.)

3	Oil pipe
4	Radiator (in tank oil cooler) (See 01–12A–8 RADIATOR REMOVAL/ INSTALLATION [L3, AJ].) (See 05–17B–50 Radiator (In Tank Oil Cooler) Installation Note.)

Radiator (In Tank Oil Cooler) Installation Note

1. The automatic transaxle oil cooler flushing must be performed whenever a transaxle is removed for service because the existing fluid may be contaminated, and to prevent contamination of new fluid.

   Note
   - Flushing must be performed after installation of an overhauled or replaced transaxle.

2. Follow the instructions in the manufacturer's publication for flushing operation.

Oil Pipe, Hose Clamp, Oil Hose Installation Note

1. Apply compressed air to the cooler-side opening, and blow any remaining grime and foreign material from the cooler pipes. Compressed air should be applied for no **less than 1 min**.

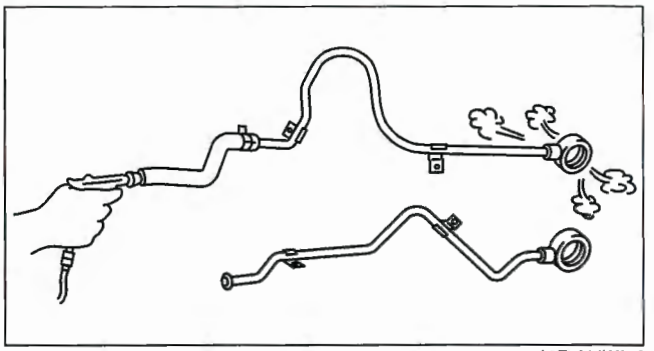

A6E5614W070

2. Align the marks, and slide the oil hose onto the oil pipe until it is fully seated as shown in the figure.

   Note
   - If reusing the hose, install the new hose clamp exactly on the mark left by the previous hose camp. Then apply force to the hose clamp in the direction of the arrow in order to fit the clamp in place.

3. Install the new hose clamp onto the hose.
4. Verify that the hose clamp does not interfere with any other components.

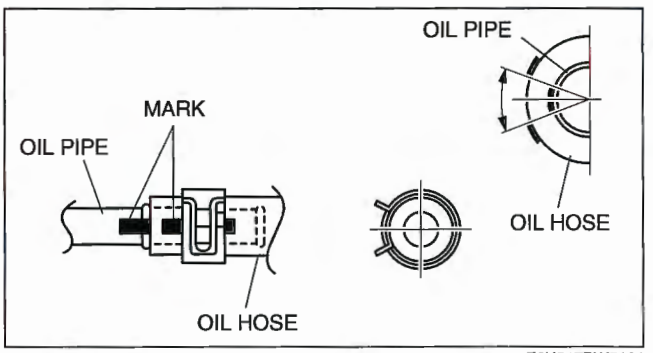

E6U517BW5101

OIL COOLER DISASSEMBLY/ASSEMBLY [AW6A-EL]

E6U051719900W03

1. Disassemble in the order indicated in the table.
2. Assemble in the reverse order of disassembly.

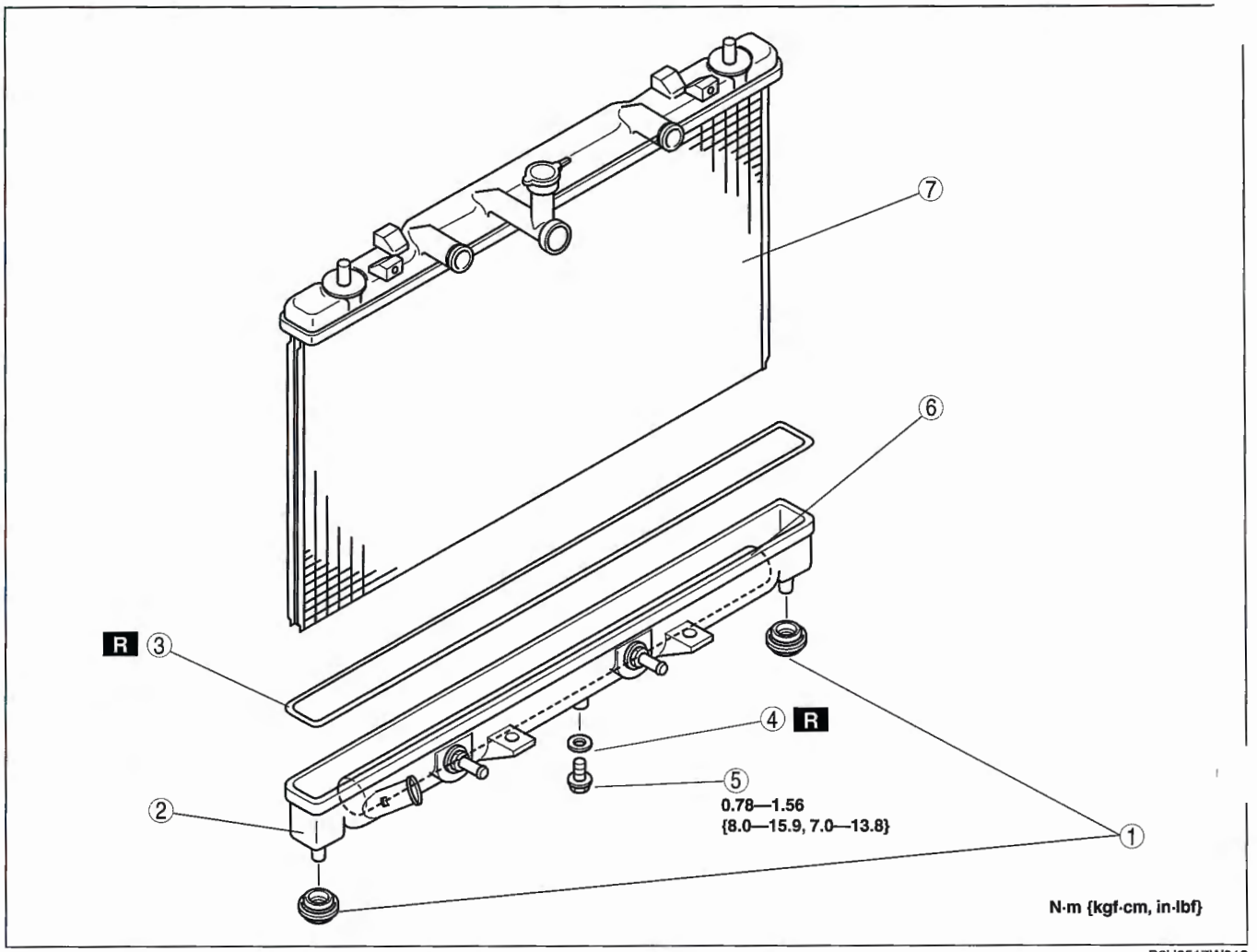

B6U0517W018

1	Mount rubber
2	Radiator outer tank (in tank oil cooler) (See 05–17B–53 Radiator Outer Tank (In Tank Oil Cooler) Removal Note.) (See 05–17B–53 Radiator Outer Tank (In Tank Oil Cooler) Installation Note.)
3	O-ring
4	Washer

5	Drain cock
6	ATF cooler
7	Radiator

Radiator Outer Tank (In Tank Oil Cooler) Removal Note

1. Inspect the height of the header tabs.
2. Insert the end of a medium tip screwdriver between the end of the header tab and the outer tank.

Note
- Do not open more tabs than necessary for tank removal.

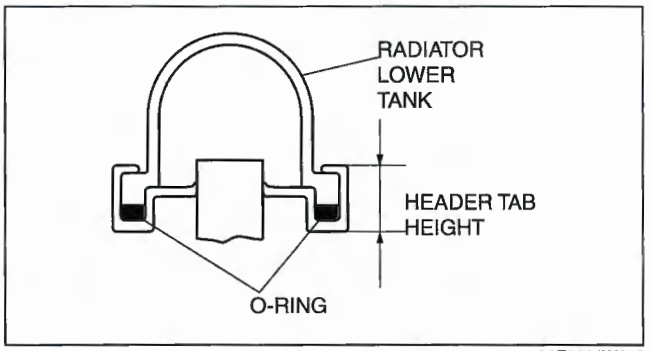

A6E5614W073

3. Pivot the screwdriver to pry the tab away from the tank and repeat the procedure for each tab.
4. Remove the radiator outer tank and O-ring (gasket) from the core header when all of the tabs are opened.

Note
- If any header tabs are missing from the core, replace the radiator.

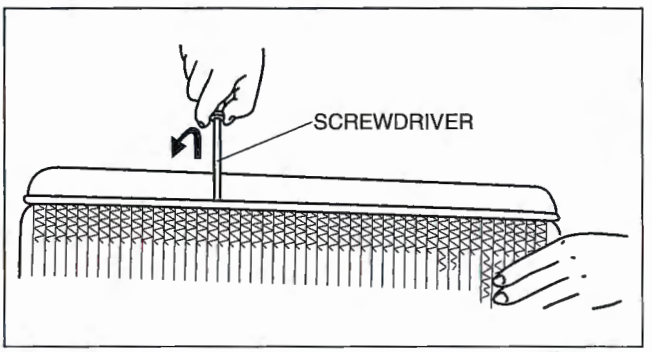

A6E5614W074

5. Inspect the gasket surface of the radiator core header to ensure it is clean and free of foreign material or damage.
6. Inspect the radiator outer tank for warping. If it is warped, replace radiator tank.

Radiator Outer Tank (In Tank Oil Cooler) Installation Note

1. Install a new O-ring and ensure it is not twisted. Position the radiator tank in the original direction to the core using care not to scratch the tank sealing surface with the header tabs.

Note
- Step 3 will set jaw opening to the correct specification.

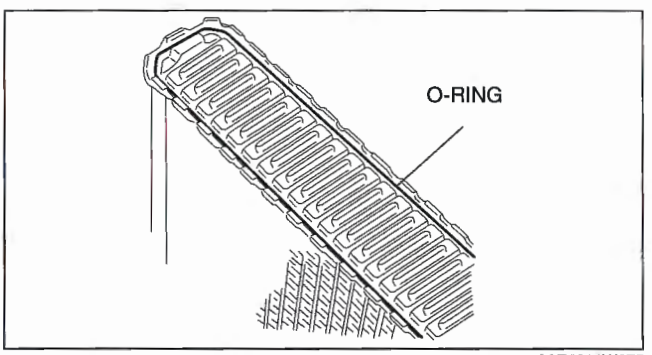

A6E5614W075

3. With the jaws of locking-type pliers (vise grips) closed and locked, turn the adjusting screw to position the jaws against the drill bit with the diameter measured (height) in the removal procedure 1. Tighten the lock nut on the adjusting screw against the handle to lock the adjustment in place.

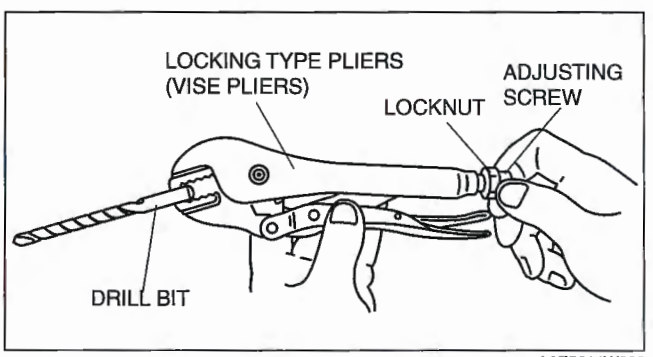

A6E5614W093

4. Squeeze the header tabs down in the order as shown against the lip of the radiator outer tank base with the locking-type pliers while rotating the pliers toward the tank.

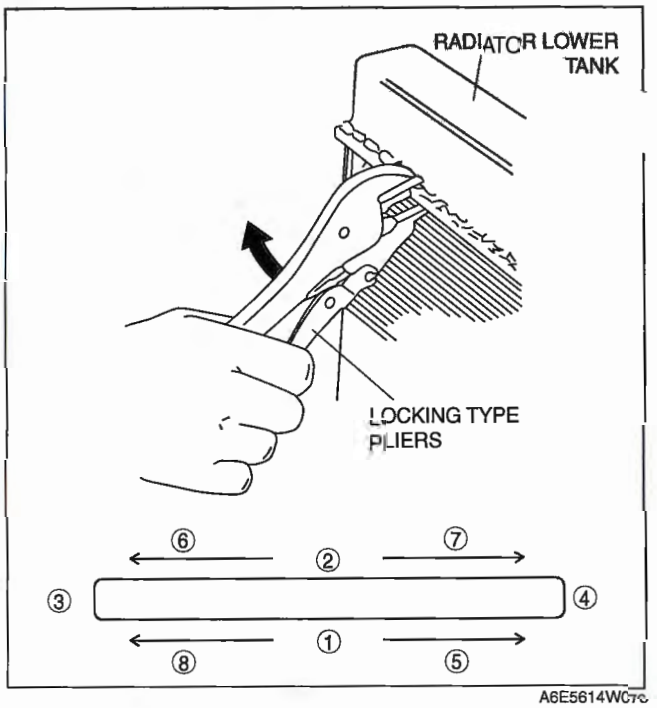

A6E5614WC7C

5. Verify that the height of the header tabs is same as the height before removal.
6. Inspect for leakage from radiator. (See 01–12A–7 ENGINE COOLANT LEAKAGE INSPECTION [L3, AJ].)

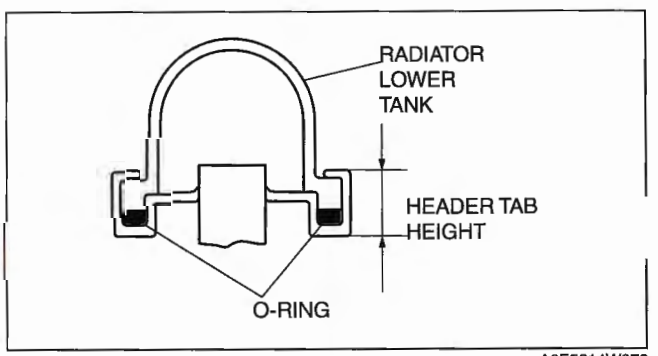

A6E5614W073

DRIVE PLATE REMOVAL/INSTALLATION [AW6A-EL]

E6U051719020W01

1. Remove the transaxle. (See 05–17B–30 AUTOMATIC TRANSAXLE REMOVAL/INSTALLATION [AW6A-EL].)
2. Remove in the order indicated in the figure.
3. Install in the reverse order of removal.

1	Drive plate mounting bolts (See 05–17B–55 Drive Plate Mounting Bolts Removal Note.)
2	Drive plate (See 05–17B–55 Drive Plate Installation Note.)

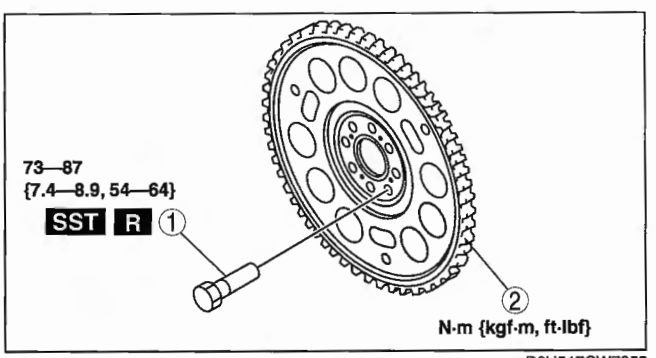

D6U517CW7055

Drive Plate Mounting Bolts Removal Note

1. Set the **SST** or equivalent against the drive plate.
2. Remove the bolts and the drive plate.

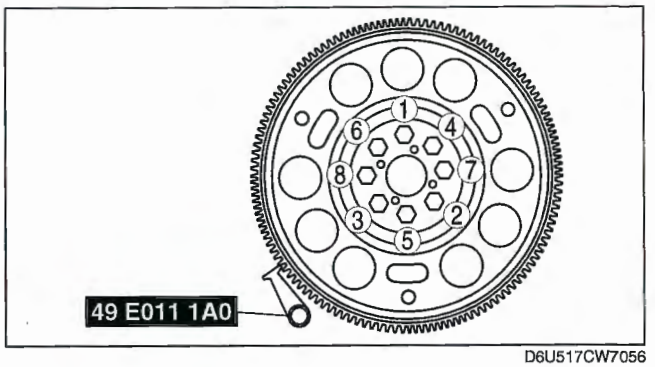

D6U517CW7056

Drive Plate Installation Note

Caution

- **Clean the crankshaft threads before tightening the bolts.The threads may be damaged if the bolts are tightened with any old sealant remaining.**

1. Clean the crankshaft thread holes.
2. Install the drive plate.
3. Set the **SST** or equivalent against the drive plate.
4. Tighten the new drive plate mounting bolts in two or three steps in the order shown.

   Tightening torque
   73—87 N·m {7.4—8.9 kgf·m, 54—64 ft·lbf}

5. Install the transaxle. (See 05–17B–30 AUTOMATIC TRANSAXLE REMOVAL/ INSTALLATION [AW6A-EL].)

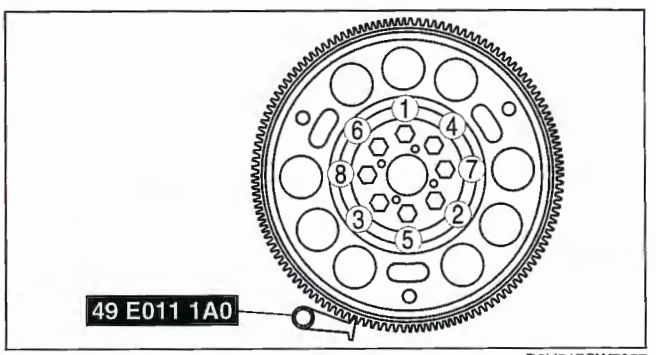

D6U517CW7057

05–18 AUTOMATIC TRANSAXLE SHIFT MECHANISM

AUTOMATIC TRANSAXLE SHIFT MECHANISM LOCATION INDEX 05–18–1
SHIFT-LOCK INSPECTION 05–18–1
KEY INTERLOCK INSPECTION 05–18–1
INTERLOCK CABLE INSPECTION 05–18–2
INTERLOCK CABLE ADJUSTMENT 05–18–3
SELECTOR LEVER INSPECTION 05–18–6
SELECTOR LEVER COMPONENT INSPECTION 05–18–6
SELECTOR CABLE ADJUSTMENT 05–18–7
SELECTOR LEVER COMPONENT REMOVAL/INSTALLATION 05–18–7
Selector Cable Removal Note 05–18–9
Selector Cable Installation Note (FS5A-EL automatic transaxle models) 05–18–9
Selector Cable Installation Note (AW6A-EL automatic transaxle models) 05–18–11
Interlock Cable Installation Note 05–18–12
SELECTOR LEVER DISASSEMBLY/ASSEMBLY 05–18–16

AUTOMATIC TRANSAXLE SHIFT MECHANISM LOCATION INDEX

E6U051800000W01

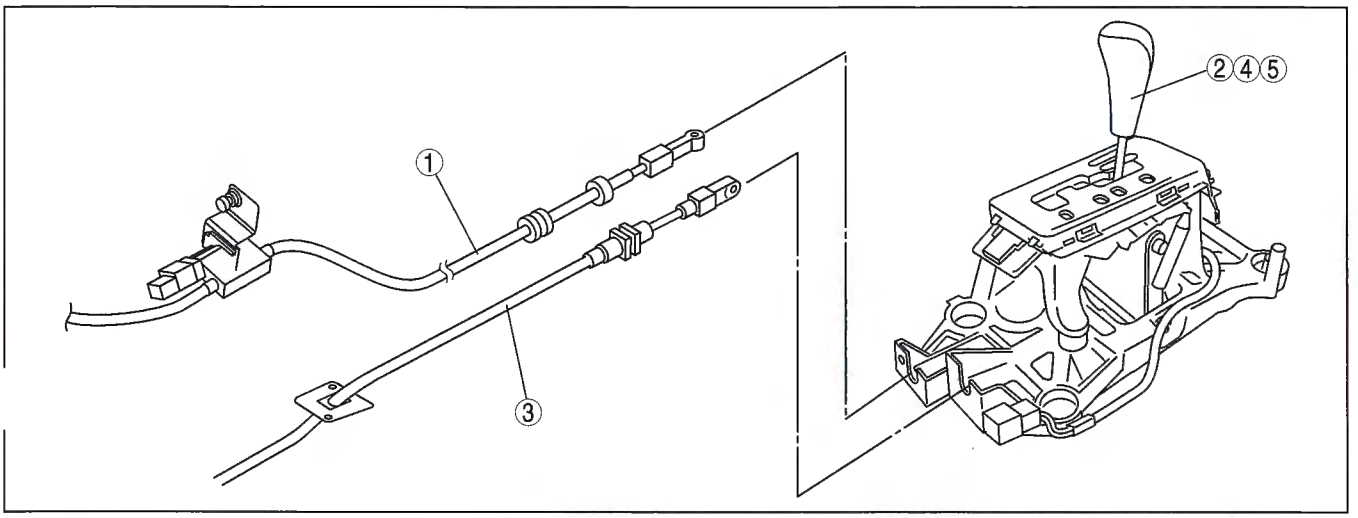

D6U518ZW7001

1	Interlock cable (See 05–18–2 INTERLOCK CABLE INSPECTION.) (See 05–18–3 INTERLOCK CABLE ADJUSTMENT.)
2	Selector lever (See 05–18–6 SELECTOR LEVER INSPECTION.) (See 05–18–6 SELECTOR LEVER COMPONENT INSPECTION.) (See 05–18–7 SELECTOR LEVER COMPONENT REMOVAL/INSTALLATION.) (See 05–18–16 SELECTOR LEVER DISASSEMBLY/ASSEMBLY.)
3	Selector cable (See 05–18–7 SELECTOR CABLE ADJUSTMENT.)
4	Shift-lock (See 05–18–1 SHIFT-LOCK INSPECTION.)
5	Key interlock (See 05–18–1 KEY INTERLOCK INSPECTION.)

SHIFT-LOCK INSPECTION

E6U051830000W01

1. Turn the ignition switch to the ON position.
2. Verify that the selector lever is in the P position.
3. Verify that the selector lever cannot be shifted from the P position without depressing the brake pedal.
4. Depress the brake pedal and verify that the selector lever cannot be shifted from the P position.
   - If there is any malfunction, inspect the interlock cable. (See 05–18–2 INTERLOCK CABLE INSPECTION.)

KEY INTERLOCK INSPECTION

E6U051809000W01

1. Verify that the ignition key cannot be pulled out except in the P position.
   - If there is any malfunction, inspect the interlock cable. (See 05–18–2 INTERLOCK CABLE INSPECTION.)

INTERLOCK CABLE INSPECTION

E6U051809000W02

1. Turn the ignition switch to the ON position. (Engine off)
2. Remove the clip of the selector lever base plate, then remove the interlock cable from the U-groove.

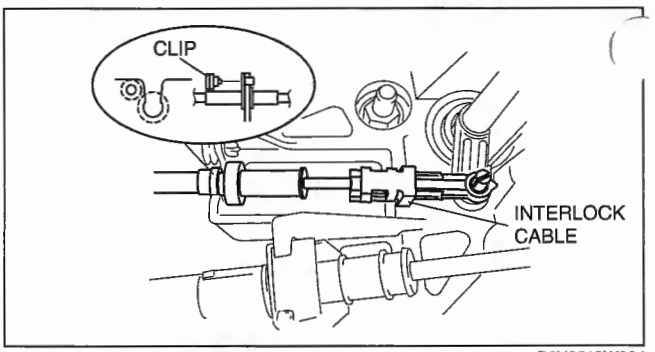

B6U0518W004

3. Remove the interlock cable from the selector lever.

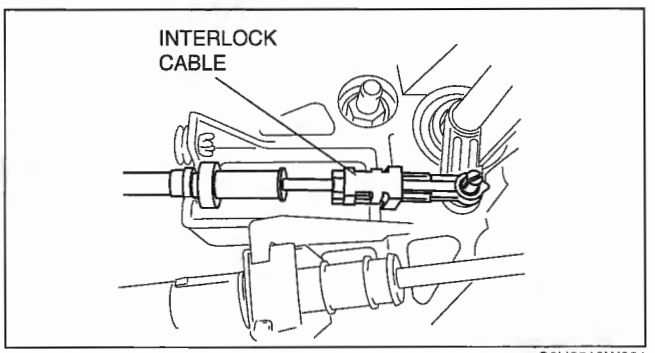

C6U0518W001

4. Verify that the interlock cable moves freely with the brake pedal depressed.
   - If there is any malfunction, inspect the interlock cable for abnormal winding. If any abnormal winding found, correct it.
   - If the malfunction persists after correcting the interlock cable winding, replace it.

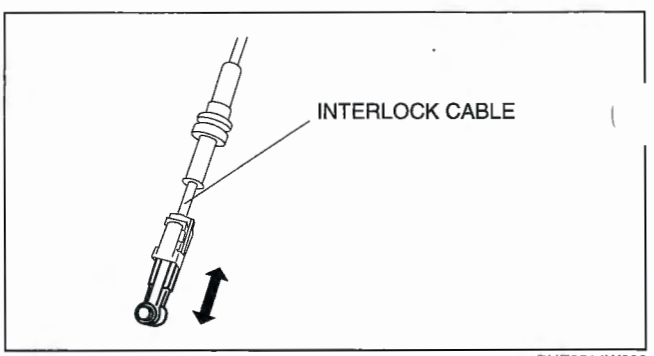

BHE0514W009

INTERLOCK CABLE ADJUSTMENT

E6U051809000W03

1. Turn the ignition switch to the ON position. (Engine off)
2. Pull up the lock piece of the interlock cable to release the lock.

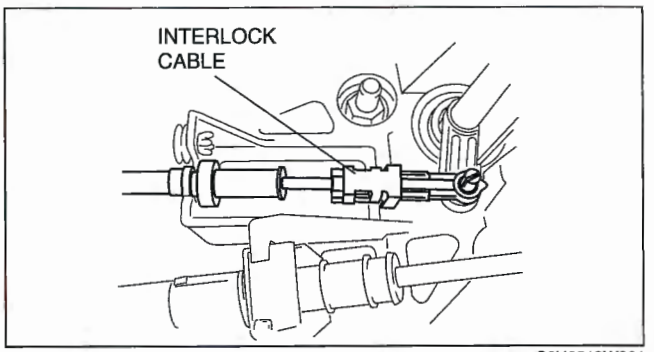

C6U0518W001

3. Remove the clip of the selector lever base plate, then remove the interlock cable from the U-groove.
4. Remove the interlock cable from the selector lever.
5. Remove the lock unit from the bracket.

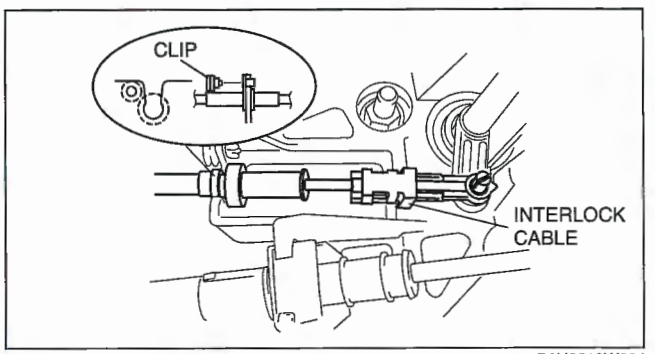

B6U0518W004

6. Verify that the marking on the slider pin is positioned as shown in the figure.

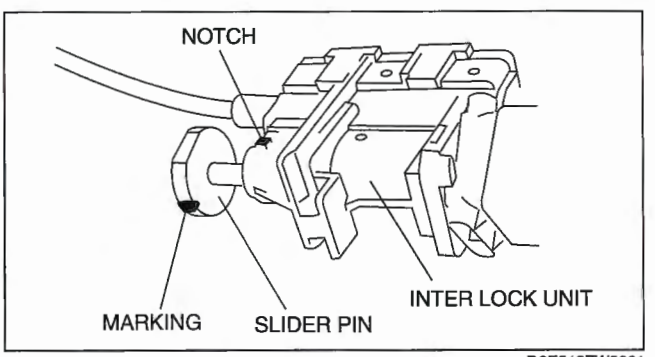

D6E518ZW5001

7. Push the interlock cable.

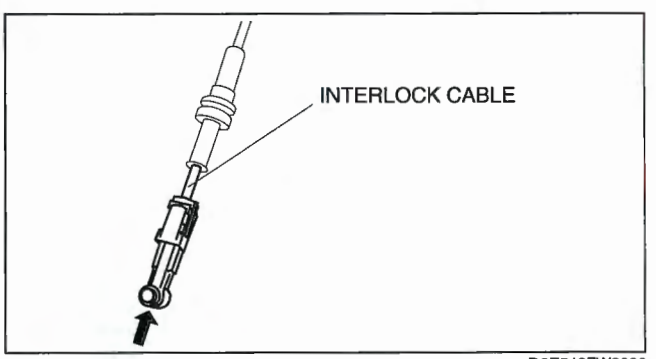

D6E518ZW2006

8. Insert the a 1.5mm {0.059 in} round bar or similar into hole A with the slider pin fully pushed in.

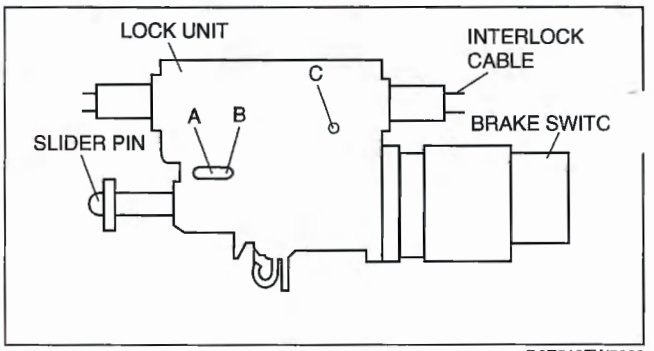

D6E518ZW5003

9. Fully pull the end of the interlock cable.

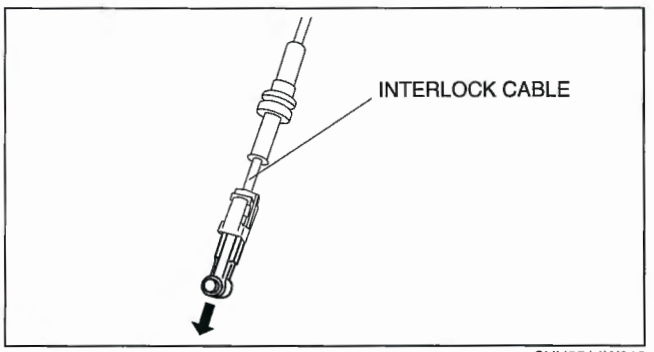

CHU0514W010

10. Push the a 1.5mm {0.059 in} round bar or similar into hole B and hole C of the lock unit until it passes through.
11. Disconnect the brake switch connector.
12. Remove the brake switch. (See 04–11–8 BRAKE PEDAL REMOVAL/INSTALLATION.)
13. Install a new brake switch. (See 04–11–8 BRAKE PEDAL REMOVAL/INSTALLATION.)

Caution
- **Do not connect the brake switch connector until the interlock cable adjustment is completed.**

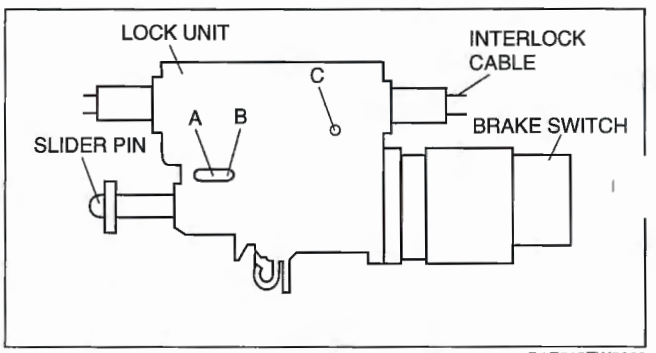

D6E518ZW5003

14. Install the lock unit to the bracket. (See 05–18–12 Interlock Cable Installation Note.)
15. Rotate the slider pin to release the lock and verify that it slides freely.
16. Verify that the slider pin contacts the brake pedal stopper rubber and rotate the slider pin to lock.

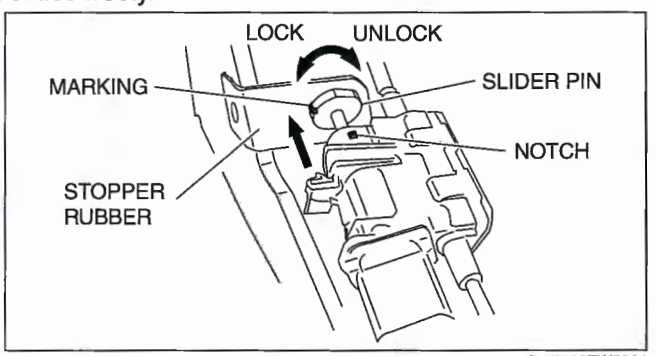

D6E518ZW5004

17. Install the interlock cable end to the interlock link on the selector lever.

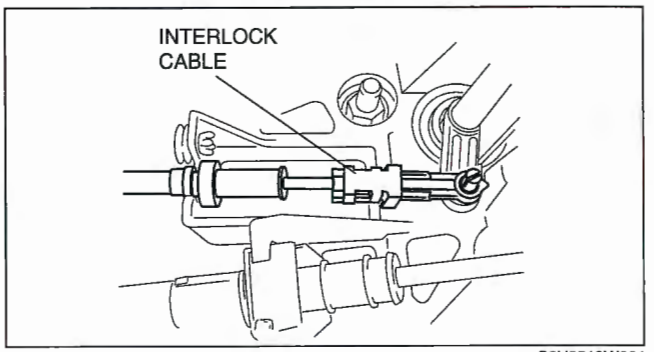

C6U0518W001

18. Fit the interlock cable in the U-groove in the selector lever base plate and install the clip.

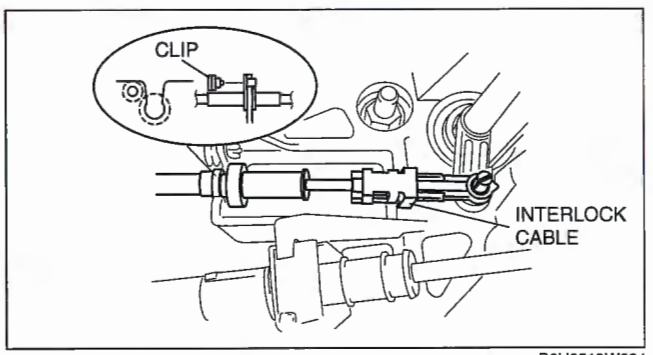

B6U0518W004

19. Press the interlock cable lock piece in until it is locked.

Caution
- **Applying a load to the interlock cable while pressing the lock piece in can affect the lock unit operation.**

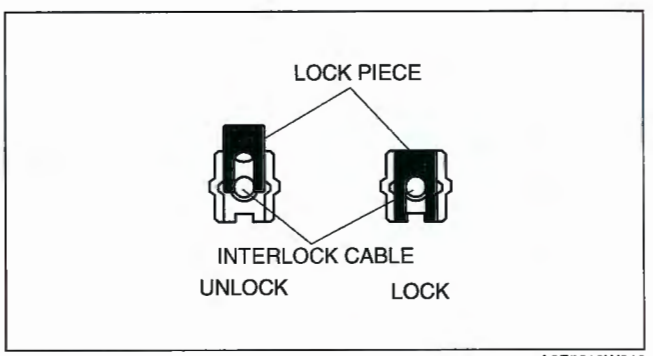

A6E5616W012

20. Remove the a 1.5mm {0.059 in} round bar or similar from the lock unit holes A, B, and C.
21. Connect the brake switch connector with the brake pedal released.

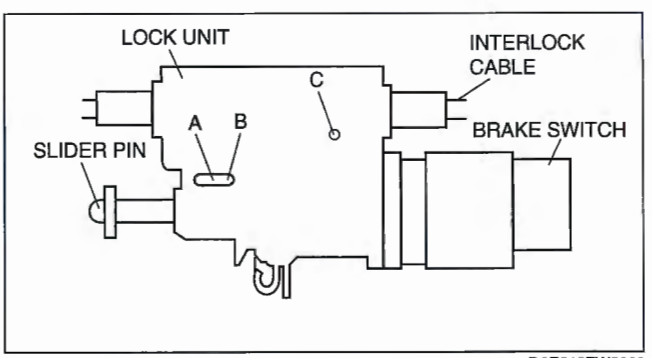

D6E518ZW5003

Caution
- **The clearance between the brake switch and the brake pedal is automatically adjusted to the correct amount when the brake switch connector is connected after the brake switch has been properly installed. If the brake switch is not properly installed or the connector is connected before installation, the clearance may be incorrect, causing a brake light malfunction. Therefore, always verify that the brake switch is properly installed before connecting the connector.**
- **Once the brake switch clearance has automatically been adjusted, it cannot be adjusted again. Therefore, replace the switch with a new one when replacing the power brake unit or the pedal, or performing any procedure that changes the pedal stroke.**

Inspect shift lock operation. (See 05–18–1 SHIFT-LOCK INSPECTION.)

SELECTOR LEVER INSPECTION

E6U051846102W01

1. Turn the ignition switch to the ON position. (engine OFF)
2. With the brake pedal depressed, verify that there is a "click" at each range when shifted.
3. Verify that the selector lever can be shifted.
4. Verify that there is a "click" at each position when shifted from P position to M range.

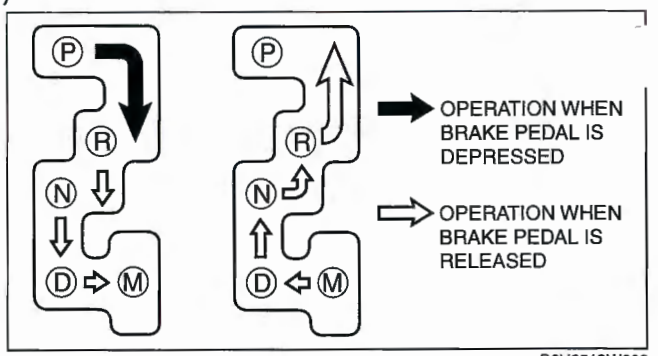

B6U0518W008

5. Verify that the positions of the selector lever and the indicator are aligned.
   - If there is any malfunction, adjust the TR switch. (See 05–17A–17 TRANSAXLE RANGE (TR) SWITCH ADJUSTMENT [FS5A-EL].) (See 05–17B–28 Neutral Position Learning.)
6. Verify that the vehicle operates in each selected range.

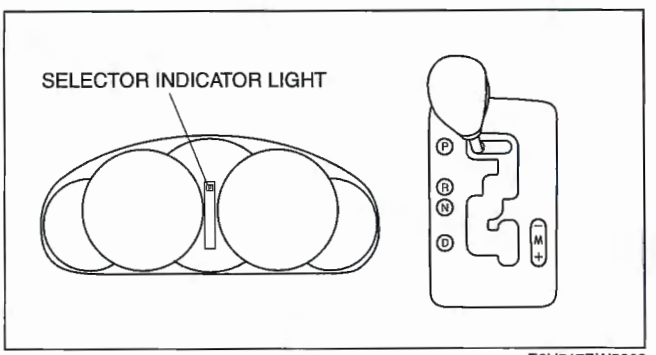

E6U517BW5003

SELECTOR LEVER COMPONENT INSPECTION

E6U051846102W02

1. Disconnect the negative battery cable.
2. Remove the center console.
3. Remove the dashboard completely. (See 09–17–4 DASHBOARD REMOVAL/INSTALLATION.)
4. Disconnect the selector lever component connector.
5. Inspect for continuity at the selector lever component.
   - If there is any malfunction, adjust the selector cable. (See 05–18–7 SELECTOR CABLE ADJUSTMENT.)

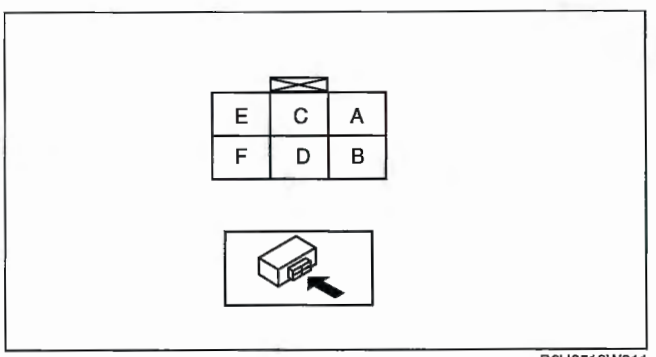

B6U0518W011

○—○ : Continuity

Selector lever position/range		Connector terminal					
		A	B	C	D	E	F
M range	- M		○		○		
	center M			○	○		
	+ M	○			○		
Other							

D6U518ZW7002

SELECTOR CABLE ADJUSTMENT

E6U051846102W03

1. Remove the center console.
2. Shift the selector lever to P position.
   Unlock the lock piece of the selector cable (selector lever side) in the order shown in the figure.
4. Verify that the manual shaft is in P position.

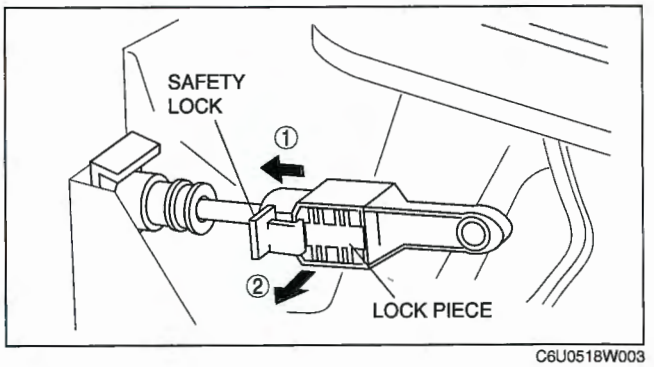

C6U0518W003

5. Lock the lock piece of the selector cable (selector lever side) in the order shown in the figure.
6. Install the center console.
7. Shift the selector lever from P position to M range, and make sure that there are no other components in that area to interfere with the lever.

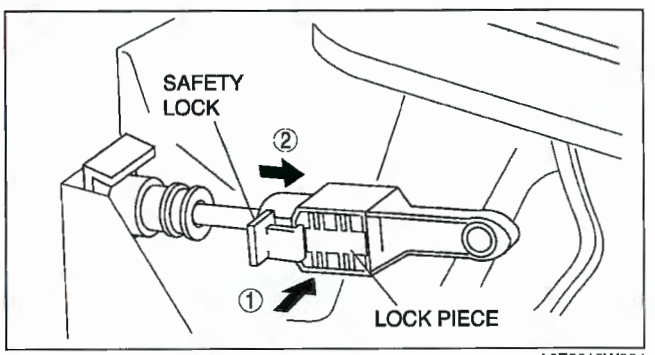

A6E5616W004

SELECTOR LEVER COMPONENT REMOVAL/INSTALLATION

E6U051846102W04

1. Disconnect the negative battery cable.
   Remove the following parts.
   (1) Battery and battery tray
   (2) Air cleaner component (See 01–13A–4 INTAKE AIR SYSTEM REMOVAL/INSTALLATION [L3].) (See 01–13C–2 INTAKE AIR SYSTEM REMOVAL/INSTALLATION [AJ].)
   (3) Center console
   (4) Dashboard completely (See 09–17–4 DASHBOARD REMOVAL/INSTALLATION.)
   (5) SAS control module (See 08–10–12 SAS CONTROL MODULE REMOVAL/INSTALLATION.)
   (6) Climate control unit (See 07–40–30 CLIMATE CONTROL UNIT REMOVAL [L3, AJ].) (See 07–40–30 CLIMATE CONTROL UNIT INSTALLATION [L3, AJ].)
   (7) Rear heat duct (See 07–11–14 REAR HEAT DUCT REMOVAL/INSTALLATION [L3, AJ].)

3. Remove in the order shown in the figure.
4. Install in the reverse order of removal.

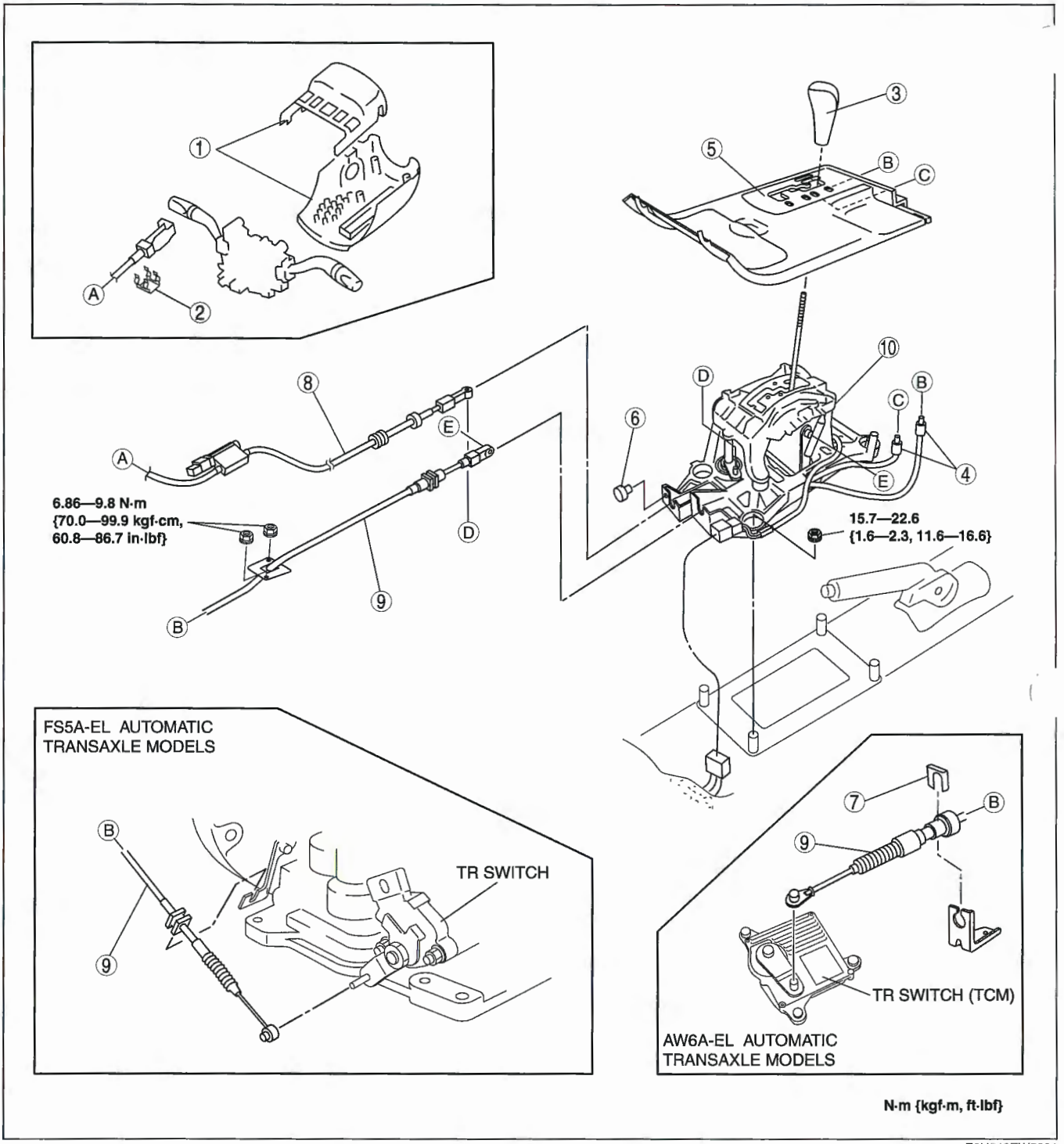

E6U518ZW5001

1	Column cover
2	Clip
3	Selector lever knob
4	Selector illumination light
5	Boot panel, indicator panel
6	Clip
7	Clip (AW6A-EL automatic transaxle models.)

8	Interlock cable (See 05–18–12 Interlock Cable Installation Note.)
9	Selector cable (See 05–18–9 Selector Cable Removal Note.) (See 05–18–9 Selector Cable Installation Note (FS5A-EL automatic transaxle models).) (See 05–18–11 Selector Cable Installation Note (AW6A-EL automatic transaxle models).)
10	Selector lever component

Selector Cable Removal Note

1. Remove the clip.
2. Remove the selector cable.

FS5A-EL automatic transaxle models

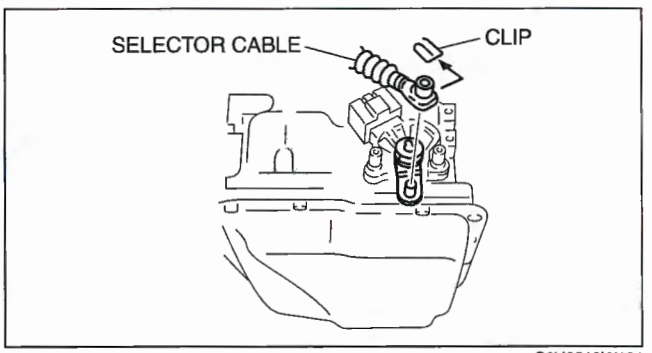

C6U0518W101

AW6A-EL automatic transaxle models

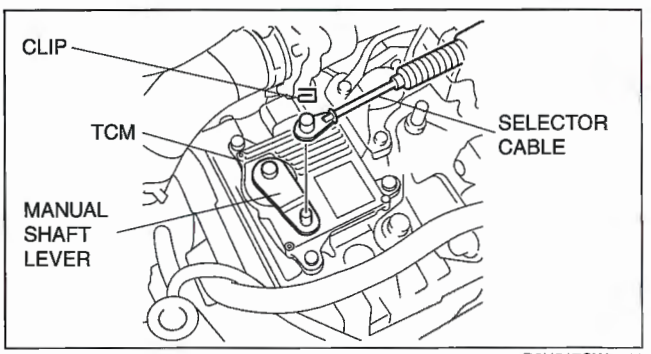

D6U517CW7010

Selector Cable Installation Note (FS5A-EL automatic transaxle models)

Install the selector cable to the selector lever securely.

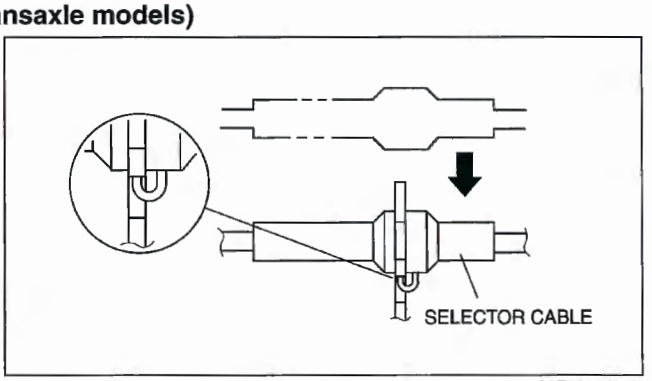

A6E5616W020

2. Install the selector cable to the bracket securely.

Note

- Steps 3 and 4 are for the selector cable replacement only.

3. Verify that the selector lever is in the P position.

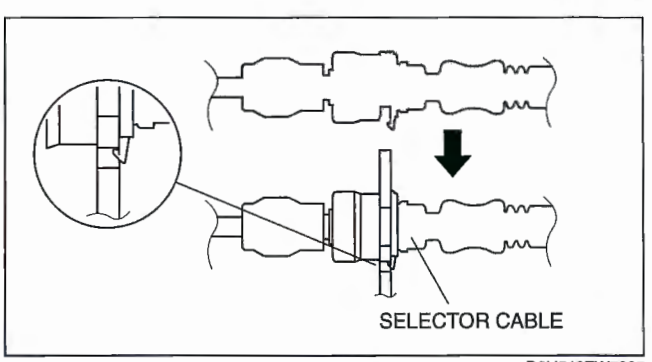

D6U518ZW7005

4. Lock the lock piece of the selector cable (selector lever side) in the order shown in the figure.
5. Verify that the manual shaft is in the P position.

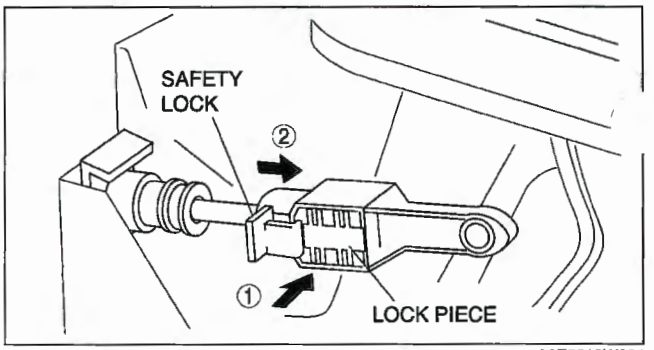

A6E5616W004

Caution
- **Bending the selector cable in the manner shown in the figure will damage the cable and it may become loose when shifted. When installing the selector cable, hold it straight.**

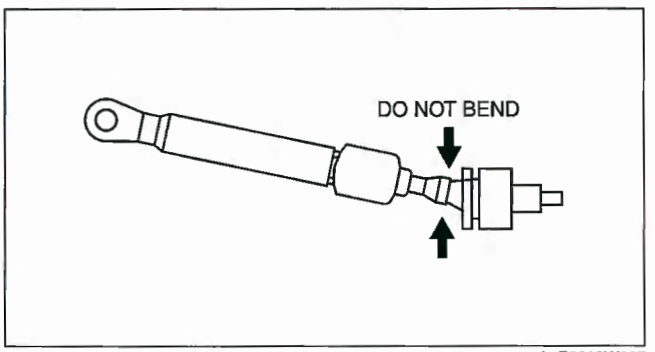

A6E5616W007

6. Install the clip as shown in the figure.

Note
- Install the selector lever to the manual shaft lever with the clip side of the selector cable end facing the front of the vehicle.

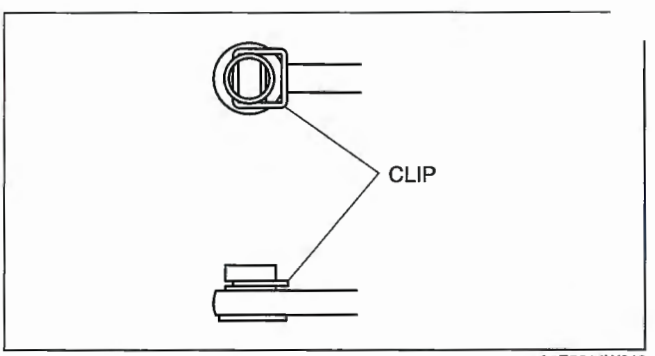

A6E5614W018

7. Install the selector lever to the manual shaft lever so that no load acts on the selector cable.
8. Confirm that the tip of the manual shaft lever projects out of the end of the selector cable.
9. Securely install the selector cable to the selector cable bracket.

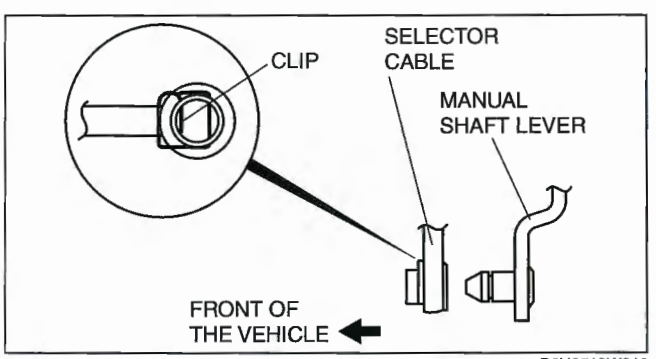

B6U0518W013

Selector Cable Installation Note (AW6A-EL automatic transaxle models)

1. Install the selector cable to the selector lever securely.

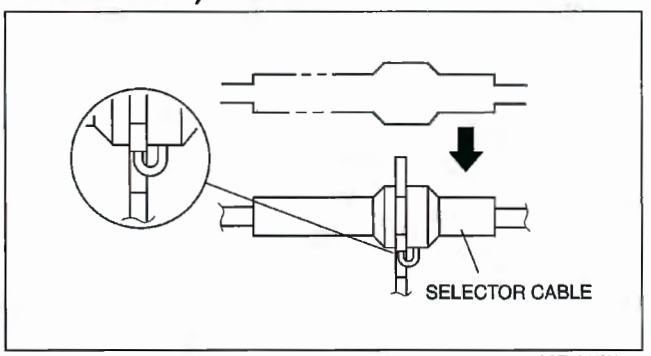

A6E5616W020

2. Install the selector cable and clip to the bracket as shown in the figure.

Note
- Steps 3 and 4 are for the selector cable replacement only.

3. Verify that the selector lever is in the P position.

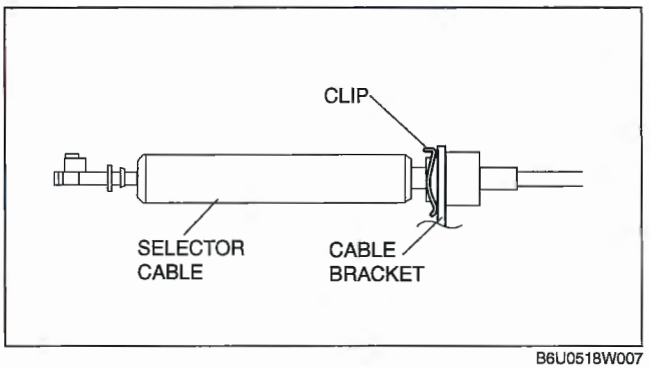

B6U0518W007

4. Lock the lock piece of the selector cable (selector lever side) in the order shown in the figure.

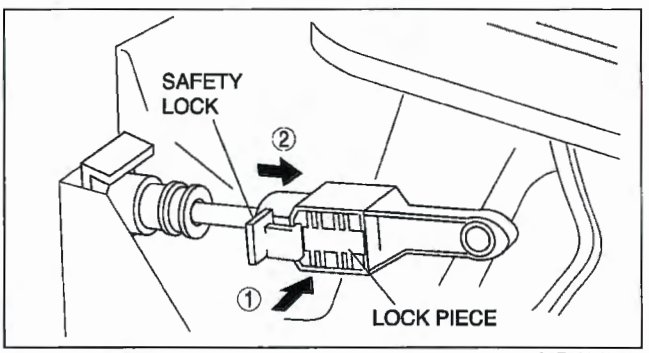

A6E5616W004

5. Verify that the manual shaft is in the P position.

Caution
- **Bending the selector cable in the manner shown in the figure will damage the cable and it may become loose when shifted. When installing the selector cable, hold it straight.**

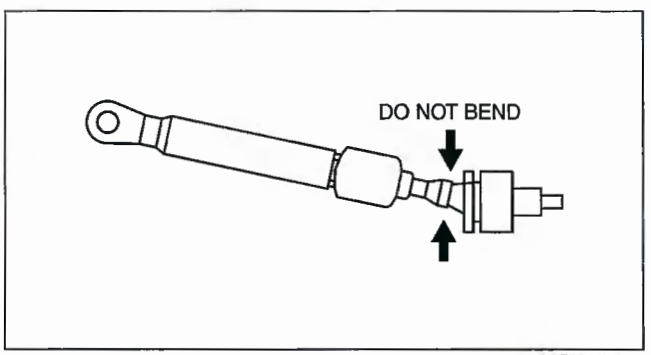

A6E5616W007

6. Install the clip as shown in the figure.

Note
- Install the selector lever to the manual shaft lever with the clip side of the selector cable end facing up.

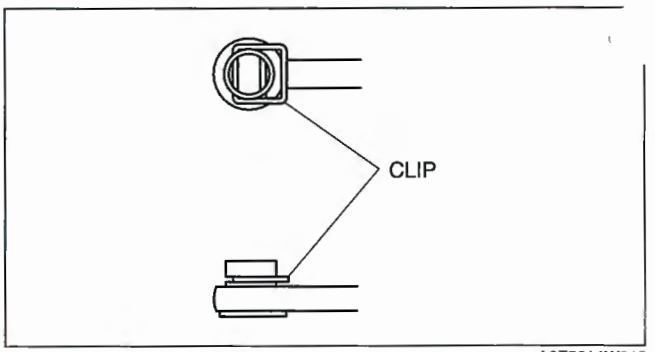

A6E5614W018

7. Install the selector lever to the manual shaft lever so that no load acts on the selector cable.
8. Confirm that the tip of the manual shaft lever projects out of the end of the selector cable.
9. Securely install the selector cable to the selector cable bracket.

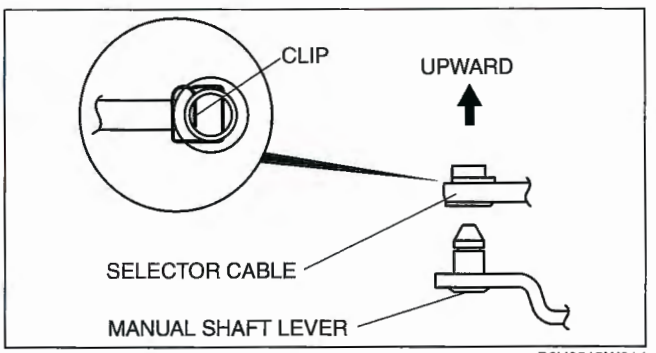

B6U0518W014

Interlock Cable Installation Note

1. Install the interlock cable as shown in the figure.

Caution
- **Position the sponge protector so that it is not crushed or squeezed by the SAS control module.**
- **If the interlock and selector cables cross over each other, position the interlock cable to pass over the selector cable.**

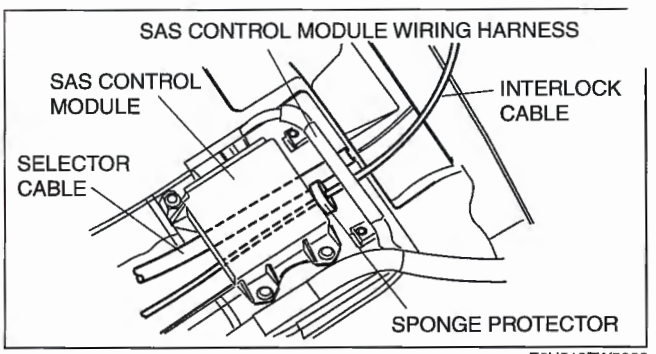

E6U518ZW5002

2. Push the interlock cable.

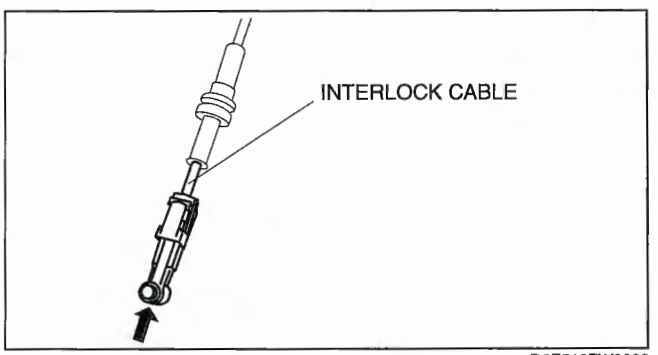

D6E518ZW2006

3. Verify that the marking on the slider pin is positioned as shown in the figure.

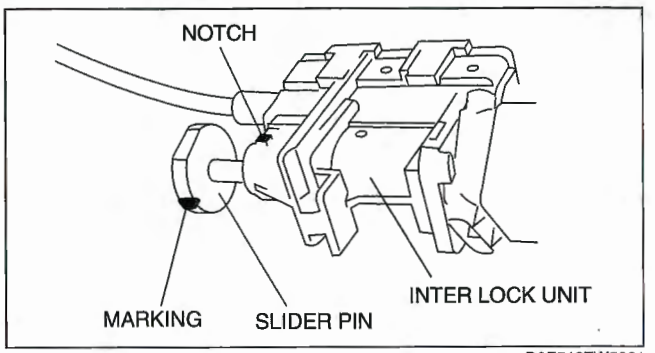

D6E518ZW5001

4. Push the a 1.5mm {0.059 in} round bar or similar into hole A by fully pushing the slider pin in.

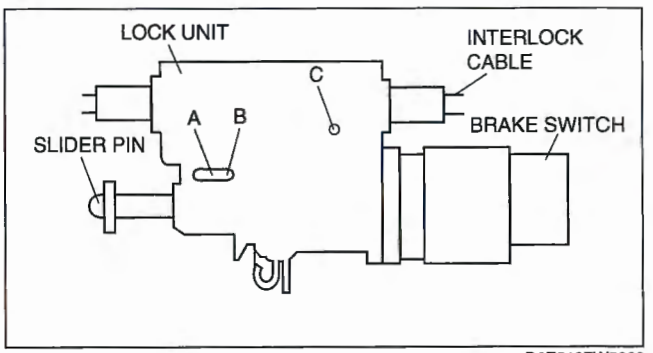

D6E518ZW5003

5. Fully pull the end of the interlock cable.

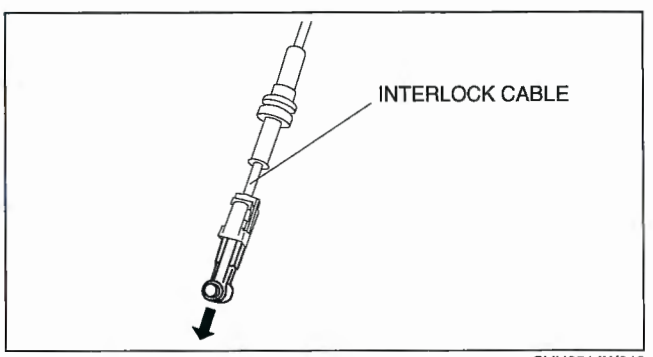

CHU0514W010

6. Push the a 1.5mm {0.059 in} round bar or similar into hole B and hole C of the lock unit until it passes through.
7. Disconnect the brake switch connector.
8. Remove the brake switch. (See 04–11–8 BRAKE PEDAL REMOVAL/INSTALLATION.)
9. Install a new brake switch. (See 04–11–8 BRAKE PEDAL REMOVAL/INSTALLATION.)

Caution
- **Do not connect the brake switch connector until the interlock cable is installed.**

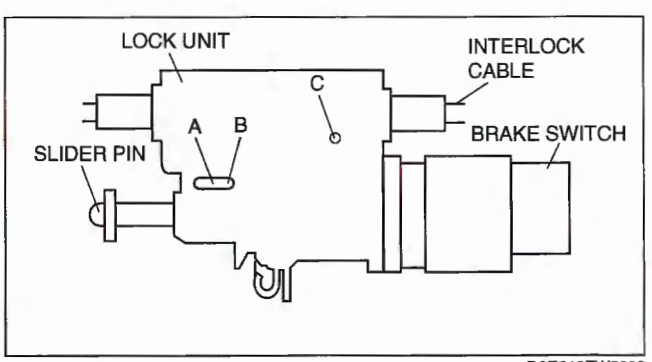

D6E518ZW5003

10. With the slider pin pressed, slide the lock unit to fix the lock unit hook into the bracket hole securely as shown in the figure.

Caution
- **Allowing the interlock cable to be bent or twisted during installation can affect the lock unit operation.**

11. Rotate the slider pin to release the lock and verify that it slides freely.

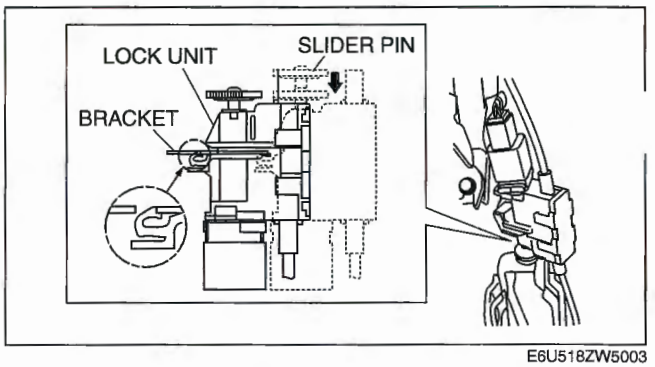

E6U518ZW5003

12. Pull the slider pin outward until it contacts the brake pedal stopper rubber and rotate the slider pin to lock.
13. Verify that the selector lever in the P position.

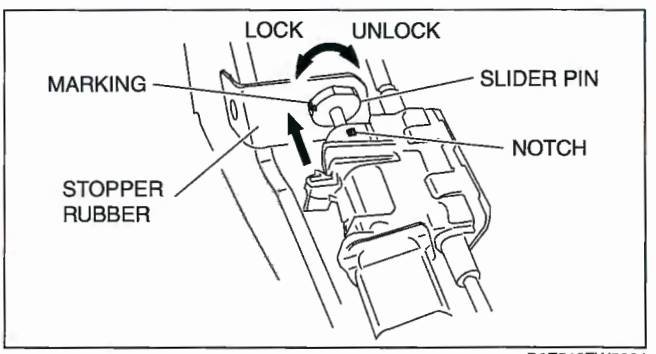

D6E518ZW5004

14. Install the interlock cable end to the cam pin on the selector lever.

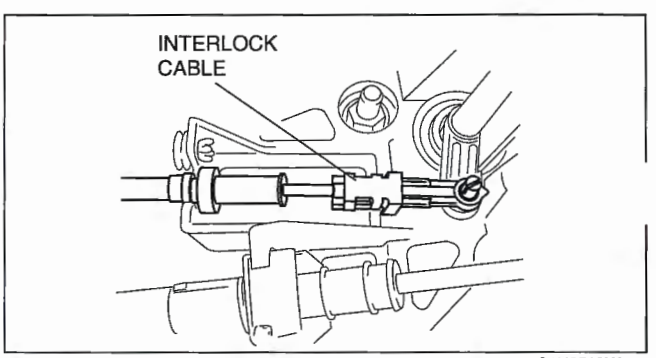

C6U0518W001

15. Fit the interlock cable in the U–groove in the selector lever base plate and install the clip.

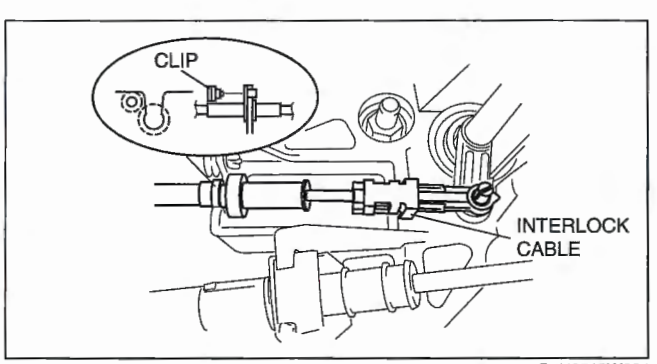

B6U0518W004

16. Press the interlock cable lock piece in until it is locked.

Caution
- **Applying a load to the interlock cable while pressing the lock piece in can affect the lock unit operation.**

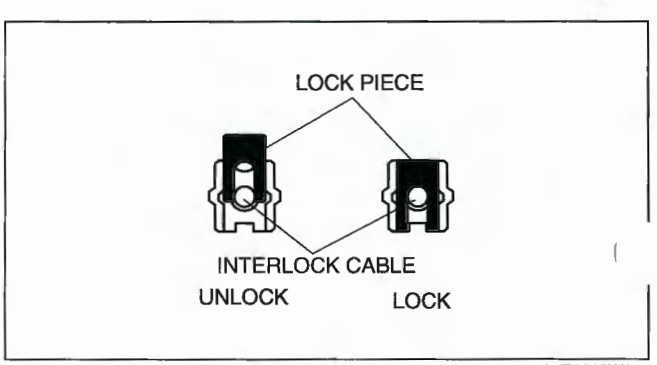

A6E5616W012

17. Remove the a 1.5mm {0.059 in} round bar or similar from the lock unit holes A, B, and C.
18. Connect the brake switch connector with the brake pedal released.

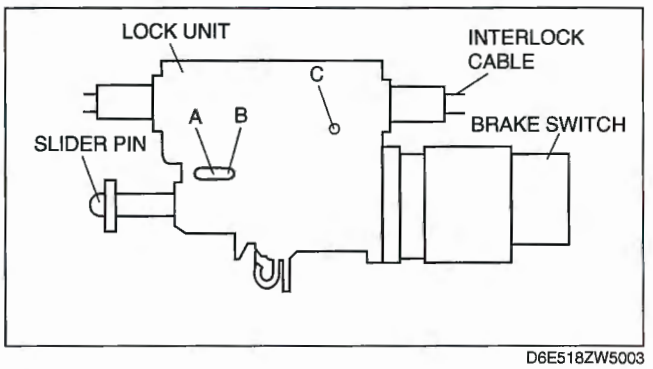

D6E518ZW5003

Caution

- **The clearance between the brake switch and the brake pedal is automatically adjusted to the correct amount when the brake switch connector is connected after the brake switch has been properly installed. If the brake switch is not properly installed or the connector is connected before installation, the clearance may be incorrect, causing a brake light malfunction. Therefore, always verify that the brake switch is properly installed before connecting the connector.**
- **Once the brake switch clearance has automatically been adjusted, it cannot be adjusted again. Therefore, replace the switch with a new one when replacing the power brake unit or the pedal, or performing any procedure that changes the pedal stroke.**

19. Turn the ignition switch to ON position.
20. Install the interlock cable to the steering lock.
21. Slide the outer casing to the steering lock and insert the clip over the convex part of the outer casing.

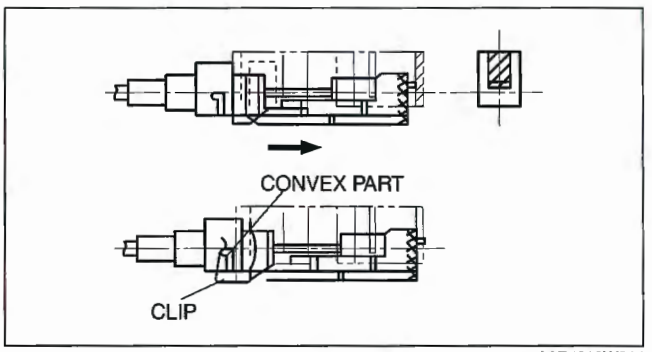

A6E5616W014

SELECTOR LEVER DISASSEMBLY/ASSEMBLY

E6U051846102W05

1. Disassemble in the order shown in the figure.
2. Assemble in the reverse order of disassembly.

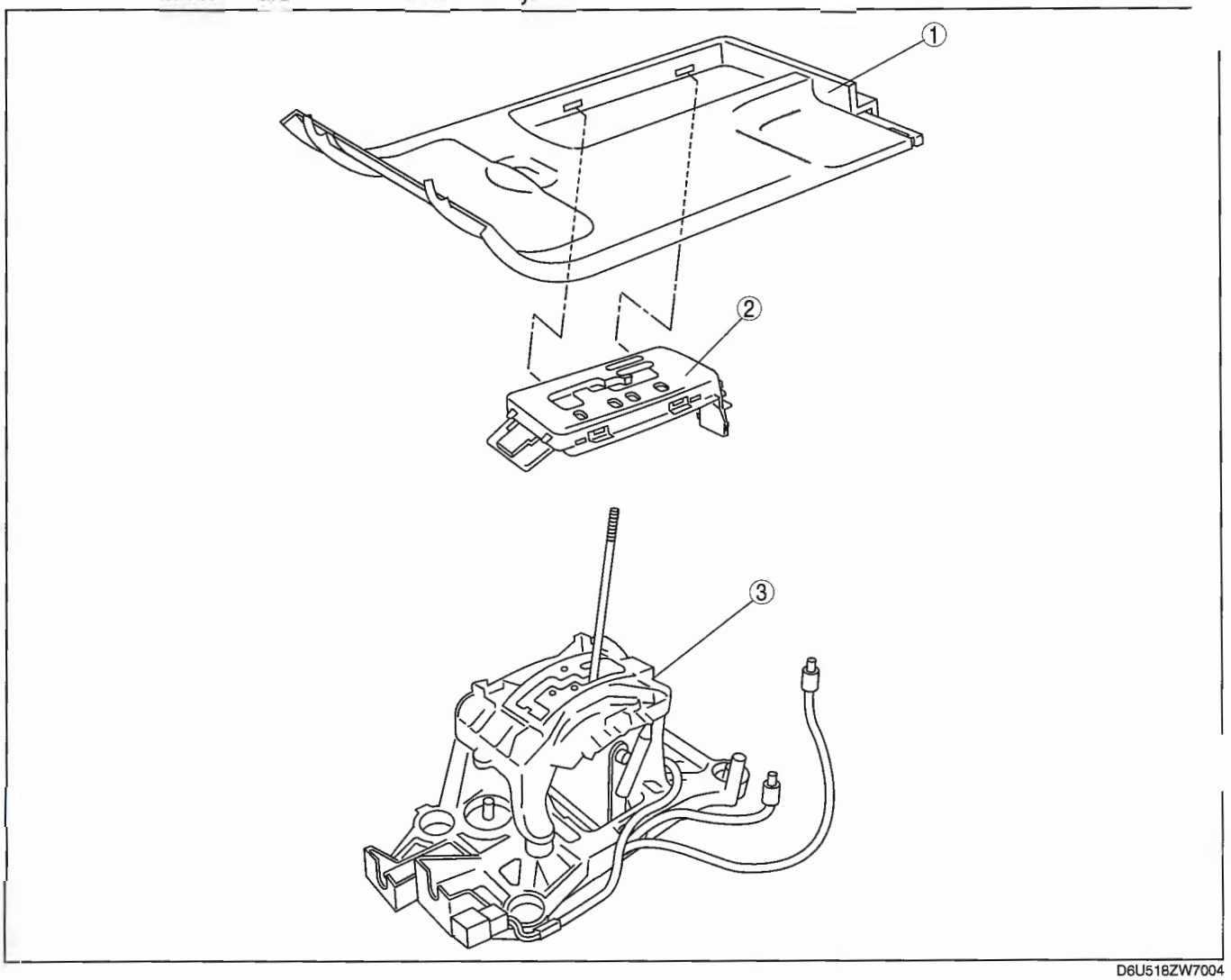

D6U518ZW7004

1	Boot panel
2	Indicator panel
3	Selector lever component

05–50 TECHNICAL DATA

TECHNICAL DATA 05–50–1
CLUTCH 05–50–1
MANUAL TRANSAXLE 05–50–1
AUTOMATIC TRANSAXLE
[FS5A-EL] 05–50–1
AUTOMATIC TRANSAXLE
[AW6A-EL] 05–50–3

TECHNICAL DATA

E6U055000000W01

CLUTCH

Item	Specification
Specified fluid	SAE J1703, FMVSS 116 DOT-3
Clutch pedal height (Reference Value)	210—216 mm {8.27—8.50 in}
Clutch pedal free play	1.0—3.0 mm {0.04—0.11 in}
Clutch pedal push rod free play	0.1—0.5 mm {0.004—0.020 in} (Reference value)
Clutch pedal disengagement stroke	Minimum: 20 mm {0.79 in} (Reference value)
Clutch pedal stroke	140 mm {5.51 in} (Reference value)
Clutch cover diaphragm spring fingers maximum depth [G35M-R, A65M-R]	0.6 mm {0.024 in} max.
Maximum clearance of flatness of the pressure plate [G35M-R, A65M-R]	0.3 mm {0.012 in} max.
Clutch cover diaphragm spring fingers maximum misalignment [G35M-R, A65M-R]	0.6 mm {0.024 in} max.
Clutch cover diaphragm spring fingers maximum depth [A26MX-R]	0.6 mm {0.024 in}
Maximum clearance of flatness of the pressure plate [A26MX-R]	0.3 mm {0.012 in}
Clutch cover diaphragm spring fingers maximum misalignment [A26MX-R]	1.0 mm {0.039 in}
Minimum clutch disc thickness	0.3 mm {0.012 in}
Maximum clutch disc runout	0.7 mm {0.028 in}
Flywheel runout limit [G35M-R]	0.1 mm {0.004 in}
Flywheel runout limit [A65M-R]	0.05 mm {0.002 in}
Dual-mass flywheel maximum runout	1.5 mm {0.059 in}

MANUAL TRANSAXLE

Item	Specification
Manual transaxle oil [G35M-R]	Specified oil grade: API Service GL-4 or GL-5 Specified oil viscosity (All-season): SAE 75W-90 Specified oil viscosity (Above 10 °C {50 °F}): SAE 80W-90 Capacity (approximate quantity): 2.87 L {3.03 US qt, 2.53 Imp qt}
Manual transaxle oil [A65M-R]	Specified oil grade: API Service GL-4 or GL-5 Specified oil viscosity: SAE 75W-90 Capacity (approximate quantity): 2.3 L {2.4 US qt, 2.0 Imp qt}
Manual transaxle oil [A26MX-R]	Specified oil grade: API Service GL-4 or GL-5 Specified oil viscosity: SAE 75W-90 Capacity (approximate quantity): 2.55 L {2.69 US qt, 2.24 Imp qt}

AUTOMATIC TRANSAXLE [FS5A-EL]

Item	Specification
Average time lag	N position→D range: 0.4—0.7 sec. N position→R position: 0.4—0.7 sec.
ATF type	ATF M-V
Capacity (approx. quantity)	8.14 L {8.6 US qt, 7.2 Imp qt}
Input/turbine speed sensor resistance	250—600 ohms (ATF temperature: –40—160 °C {–40—320 °F})
Intermediate sensor voltage	4.5—5.5 V
Vehicle speed sensor (VSS) voltage	4.5—5.5 V

Line pressure specification

Position/range	Line pressure (kPa {kgf/cm^2, psi})	
	Idle	Stall
D, M (1GR, 2GR)	330—470 {3.4—4.8, 48—68}	1,200—1,320 {12.2—13.5, 174—191}
R	490—710 {5.0—7.2, 71—102}	1,680—2,010 {17.2—20.4, 244—291}

Engine stall speed

Position/range	Engine stall speed (rpm)
D, M (1GR, 2GR)	2,200—2,800
R	

Transaxle range (TR) switch

Terminal	Position/Range	Resistance (ohm)
B—C	P	4,085—4,515
	R	1,425—1,575
	N	713—788
	D	132—390

Transaxle fluid temperature (TFT) sensor

ATF temperature (°C {°F})	Resistance (kilohm)
–20 {–4}	236—324
0 {32}	84.3—110
20 {68}	33.5—42.0
40 {104}	14.7—17.9
60 {140}	7.08—8.17
80 {176}	3.61—4.15
100 {212}	1.96—2.24
120 {248}	1.13—1.28
130 {266}	0.87—0.98

Primary control valve body (ATF temperature: –40—150 °C {–40—302 °F})

Terminal	Solenoid valve	Resistance (ohm)
A—GND	Shift solenoid A	1.0—4.2
C—GND	Shift solenoid B	1.0—4.2
G—GND	Shift solenoid C	1.0—4.2
B—GND	Shift solenoid D	10.9—26.2
F—GND	Shift solenoid E	10.9—26.2
D—I	Pressure control solenoid A	2.4—7.3

Secondary control valve body (ATF temperature: –40—150 °C {–40—302 °F})

Terminal	Solenoid valve	Resistance (ohm)
A—GND	Pressure control solenoid B	1.0—4.2
B—GND	Shift solenoid F	8.4—21.8

AUTOMATIC TRANSAXLE [AW6A-EL]

Item				Engine
				AJ
Automatic transaxle type				AW6A-EL
ATF	Type			JWS3309
	Capacity (Approx. quantity) (L {US qt, Imp qt})			7.0 {7.4, 6.2}
Line pressure (kPa {kgf/cm^2, psi})	D, M range		Idle	372—432 {3.8—4.4, 54—62}
	R position		Idle	580—670 {6.0—6.8, 85—97}
Engine stall speed (rpm)	D, M range			2,480
	R position			
Time lag (s)	N position→ D range			1 or less
	N position→ R position			1.5 or less
Transaxle fluid temperature (TFT) sensor (kilohm)	ATF temperature: 10 °C {50 °F}			5.62—7.31
	ATF temperature: 25 °C {77 °F}			3.5
	ATF temperature: 110 °C {230 °F}			0.22—0.27
Input/turbine speed sensor (mA)	Signal		High	12.0—16.0
			Low	4.0—8.0
Solenoid valves (ohm)	ATF temperature: 20 °C {68 °F}	Shift solenoid A		11—15
		Shift solenoid B		11—15
		Shift solenoid C		5.0—5.6
		Shift solenoid D		5.0—5.6
		Shift solenoid E		5.0—5.6
		Shift solenoid F		5.0—5.6
		TCC control solenoid		5.0—5.6
		Line pressure control solenoid		5.0—5.6

05–60 SERVICE TOOLS

TRANSMISSION/TRANSAXLE SST. . . . 05–60–1

TRANSMISSION/TRANSAXLE SST

E6U056000000W01

1: Mazda SST number
2: Global SST number

Example

1:49 UN30 3009 2:303-009 Crankshaft damper remover	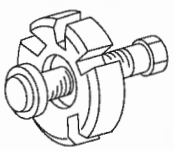

1:49 0259 770B 2: – Flare nut wrench 	1:49 E011 1A0 2: – Ring gear brake set 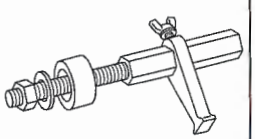	1:49 SE01 310A 2: – Clutch disc centering tool 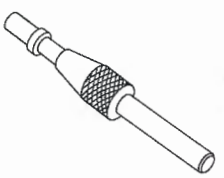
1:49 1285 071 2:– Bearing puller 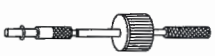	1:49 UN30 8157 2:308-157 Pilot bearing installer 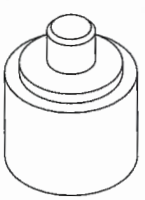	1:49 UN20 5153 2:205-153 Handle 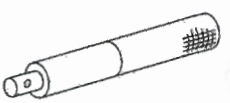
1:49 C017 5A0* 2: – Engine support 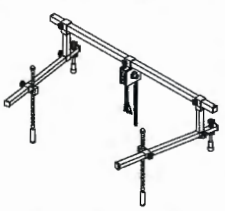	1:49 G030 795 2: – Oil seal installer 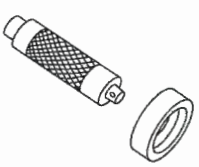	1:49 UN30 3050 2:303-050 Engine lifting bracket 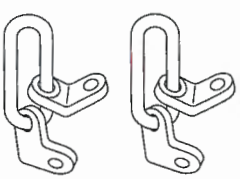
1:49 U027 003 2: – Oil seal installer 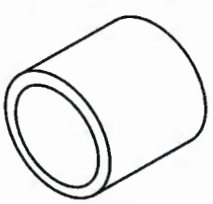	1:49 G030 797 2: – Handle 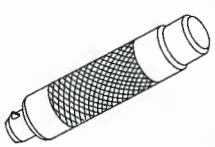	1:49 0378 400C 2: – Oil pressure gauge set 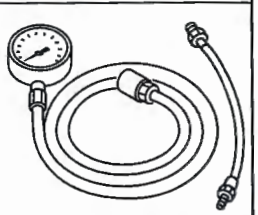
1:49 B019 901B 2: – Oil pressure gauge 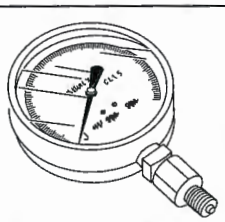	1:49 H019 002 2: – Adapter 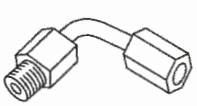	1:49 HD64 406A 2: – Adapter 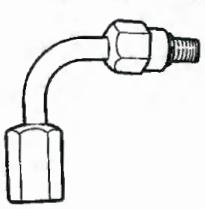

SERVICE TOOLS

1:49 F026 102 2: – Bearing replacer 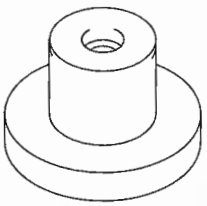	1:49 H028 202 2: – Block L 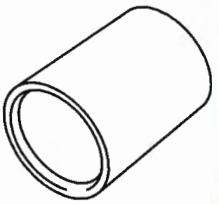	1:49 F027 009 2: – Attachment for 68&77 (Part of 49 F027 0A1) 
1: 49 F027 003 2: – Handle 	1:49 W027 001 2: – Body 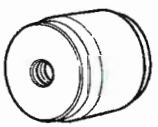	-: – 2: 418-FS475 WDS 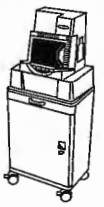

* : The SST (49 E017 5A0) can be used in place of the SST (49 C017 5A0).

STEERING

06
SECTION

GENERAL PROCEDURES....06-10
ENGINE SPEED SENSING
POWER STEERING 06-12
TECHNICAL DATA..... 06-50
SERVICE TOOLS..... 06-60

06–10 GENERAL PROCEDURES

GENERAL PROCEDURES (STEERING).....06–10–1
Wheel and Tire Installation 06–10–1
Power Steering Components Removal/Installation..... 06–10–1
Connector Disconnection..... 06–10–1
Suspension Arm Removal/Installation..... 06–10–1

GENERAL PROCEDURES (STEERING)

Wheel and Tire Installation

1. When installing the wheels and tires, tighten the wheel nuts in a criss-cross pattern to the following tightening torque.

Tightening torque
88—118 N·m {9.0—12.0 kgf·m, 65.0—87.0 ft·lbf}

E6U061000000W01

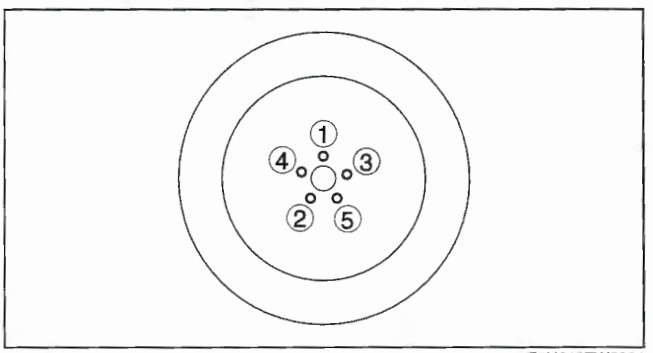

E5U610ZW5001

Power Steering Components Removal/Installation

1. If any power steering fluid line has been disconnected anytime during the procedure, add ATF M-III, M-V or equivalent (e.g. Dexron®III), bleed the fluid lines, and inspect for leakage after the procedure has been completed.

Connector Disconnection

1. Disconnect the negative battery cable before performing any work that requires handling of connectors. (See 01–17A–1 BATTERY REMOVAL/INSTALLATION [L3, AJ].) (See 01–17B–2 BATTERY REMOVAL/INSTALLATION [L3 WITH TC].)

Suspension Arm Removal/Installation

1. Tighten any part of the suspension that uses rubber bushings only after vehicle has been lowered to the ground and unloaded.

Note
- Unloaded: Fuel tank is full. Engine coolant and engine oil are at specified level. Spare tire, jack, and tools are in designated position.

06–12 ENGINE SPEED SENSING POWER STEERING

STEERING LOCATION INDEX
3, AJ] 06–12–2
STEERING LOCATION INDEX
[L3 WITH TC] 06–12–3
AIR BLEEDING 06–12–3
POWER STEERING FLUID
INSPECTION 06–12–4
Fluid Level Inspection 06–12–4
Fluid Leakage Inspection 06–12–4
Fluid Pressure Inspection 06–12–5
STEERING WHEEL AND COLUMN
INSPECTION 06–12–6
Steering Wheel Play Inspection 06–12–6
Steering Wheel Looseness
Inspection 06–12–6
Steering Wheel Effort Inspection 06–12–7
STEERING WHEEL AND COLUMN
REMOVAL/INSTALLATION 06–12–7
Steering Wheel Removal Note 06–12–9
Steering Lock Mounting Bolts
Removal Note 06–12–9
Steering Lock Mounting Bolts
Installation Note 06–12–9
Steering Shaft Installation Note 06–12–9
Steering Wheel Installation Note 06–12–9
STEERING SHAFT INSPECTION 06–12–10
STEERING GEAR AND LINKAGE
REMOVAL/INSTALLATION [L3] 06–12–11
Bolt (Intermediate Shaft)
Removal Note 06–12–12
Tie-rod End Ball Joint
Removal Note 06–12–12
Steering Gear and Linkage
Removal Note 06–12–12
Steering Gear and Linkage
Installation Note 06–12–13
Bolt (Intermediate Shaft)
Installation Note 06–12–13
STEERING GEAR AND LINKAGE
REMOVAL/INSTALLATION [AJ] 06–12–13
Crossmember Bracket
Removal Note 06–12–15
Crossmember Component,
Steering Gear and Linkage
Removal Note 06–12–15
Insulator Installation Note 06–12–15
Crossmember Component,
Steering Gear and Linkage
Installation Note 06–12–15
STEERING GEAR AND LINKAGE
REMOVAL/INSTALLATION
[L3 WITH TC] 06–12–15
STEERING GEAR AND LINKAGE
DISASSEMBLY 06–12–17
Tie Rod Disassembly Note 06–12–18
Locknut (Adjusting Cover)
Disassembly Note 06–12–18
Adjusting Cover
Disassembly Note 06–12–19
Pinion Shaft and Housing Component
Disassembly Note 06–12–19
Pinion Shaft Component
Disassembly Note 06–12–19
Snap Ring Disassembly Note 06–12–19
Upper Bearing, Oil Seal
Disassembly Note 06–12–20
Holder Disassembly Note 06–12–20
Oil Seal, Inner Guide
Disassembly Note 06–12–20
Mounting Rubber
Disassembly Note 06–12–20
STEERING GEAR AND LINKAGE
INSPECTION 06–12–21
Rack Inspection 06–12–21
Tie-rod End Inspection 06–12–21
Tie rod Inspection 06–12–21
STEERING GEAR AND LINKAGE
ASSEMBLY 06–12–22
Mounting Rubber Assembly Note 06–12–23
Oil Seal, Inner Guide
Assembly Note 06–12–23
Holder Assembly Note 06–12–24
Oil Seal Assembly Note 06–12–25
Upper Bearing Assembly Note 06–12–25
Seal Ring Assembly Note 06–12–25
Adjusting Cover Assembly Note 06–12–26
Hermetic sealing inspection 06–12–26
POWER STEERING OIL PUMP
REMOVAL/INSTALLATION
[L3, L3 WITH TC] 06–12–27
POWER STEERING OIL PUMP
REMOVAL/INSTALLATION [AJ] 06–12–28
POWER STEERING OIL PUMP
DISASSEMBLY/ASSEMBLY
[L3, L3 WITH TC] 06–12–29
Power Steering Oil Pump Component
Disassembly Note 06–12–30
Clip Disassembly Note 06–12–30
Clip Assembly Note 06–12–31
Oil Seal Assembly Note 06–12–31
Vane Assembly Note 06–12–31
Cam Ring Assembly Note 06–12–31
Rear Pump Body Assembly Note 06–12–31
POWER STEERING OIL PUMP
DISASSEMBLY/ASSEMBLY [AJ] 06–12–32

STEERING LOCATION INDEX [L3, AJ]

E6U061200000W01

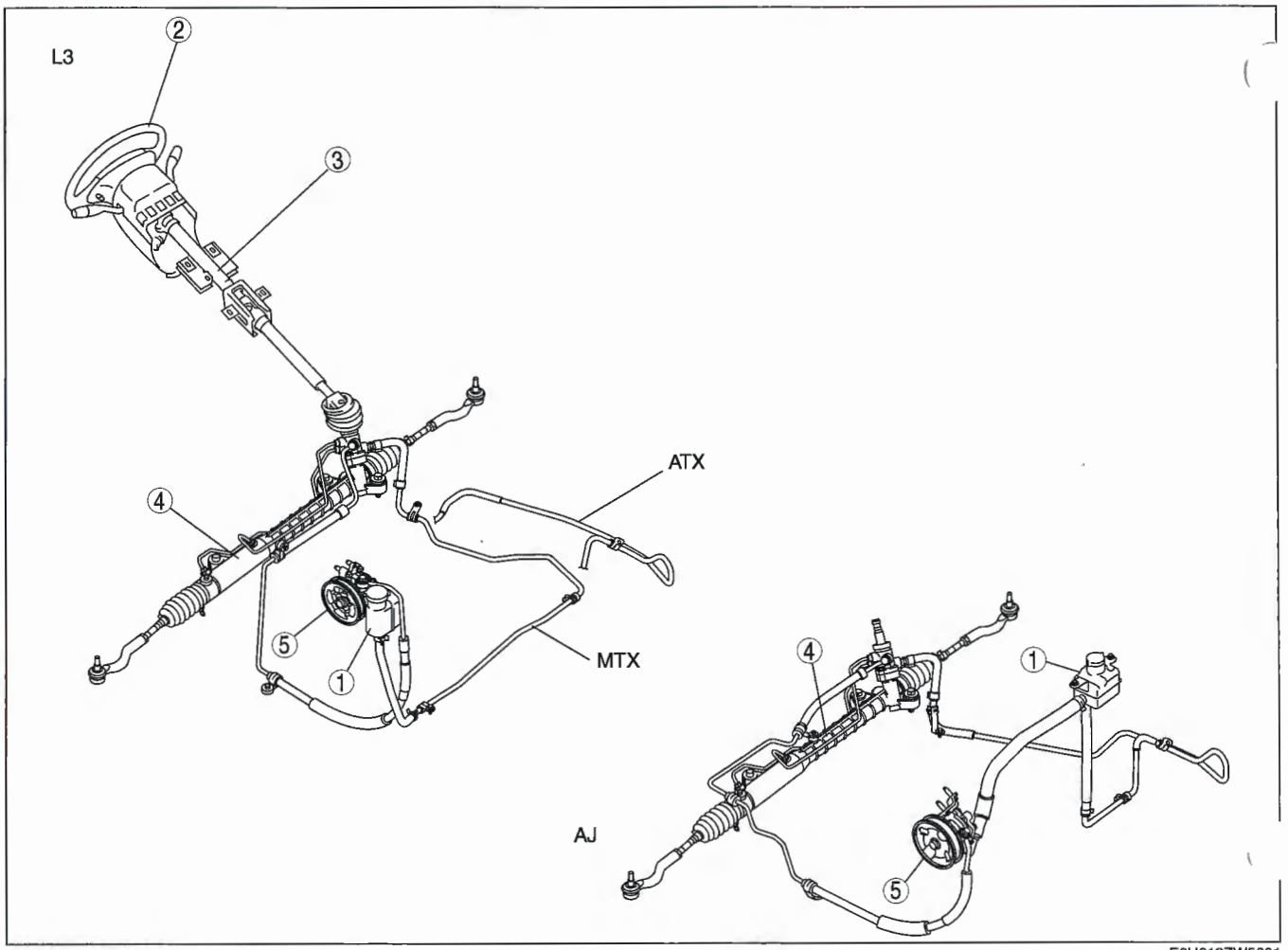

E6U612ZW5001

1	Power steering fluid (See 06–12–3 AIR BLEEDING) (See 06–12–4 POWER STEERING FLUID INSPECTION.)
2	Steering wheel and column (See 06–12–6 STEERING WHEEL AND COLUMN INSPECTION.) (See 06–12–7 STEERING WHEEL AND COLUMN REMOVAL/INSTALLATION.)
3	Steering shaft (See 06–12–10 STEERING SHAFT INSPECTION.)
4	Steering gear and linkage (See 06–12–11 STEERING GEAR AND LINKAGE REMOVAL/INSTALLATION [L3].) (See 06–12–13 STEERING GEAR AND LINKAGE REMOVAL/INSTALLATION [AJ].) (See 06–12–17 STEERING GEAR AND LINKAGE DISASSEMBLY.) (See 06–12–21 STEERING GEAR AND LINKAGE INSPECTION.) (See 06–12–22 STEERING GEAR AND LINKAGE ASSEMBLY.)
5	Power steering oil pump (See 06–12–27 POWER STEERING OIL PUMP REMOVAL/INSTALLATION [L3, L3 WITH TC].) (See 06–12–28 POWER STEERING OIL PUMP REMOVAL/INSTALLATION [AJ].) (See 06–12–29 POWER STEERING OIL PUMP DISASSEMBLY/ASSEMBLY [L3, L3 WITH TC].) (See 06–12–32 POWER STEERING OIL PUMP DISASSEMBLY/ASSEMBLY [AJ].)

STEERING LOCATION INDEX [L3 WITH TC]

E6U061200000W03

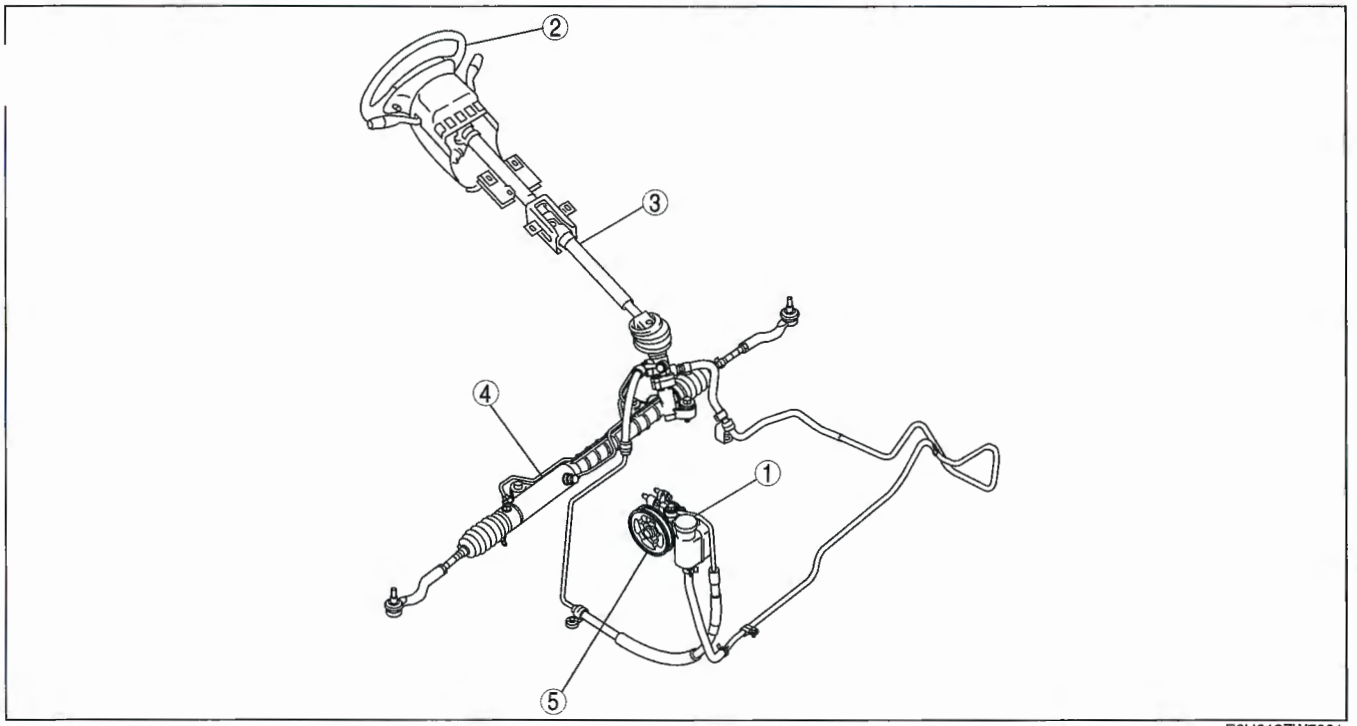

E6U612ZW7001

1	Power steering fluid (See 06–12–3 AIR BLEEDING) (See 06–12–4 POWER STEERING FLUID INSPECTION)
2	Steering wheel and column (See 06–12–6 STEERING WHEEL AND COLUMN INSPECTION) (See 06–12–7 STEERING WHEEL AND COLUMN REMOVAL/INSTALLATION)
3	Steering shaft (See 06–12–10 STEERING SHAFT INSPECTION)
4	Steering gear and linkage (See 06–12–15 STEERING GEAR AND LINKAGE REMOVAL/INSTALLATION [L3 WITH TC]) (See 06–12–17 STEERING GEAR AND LINKAGE DISASSEMBLY) (See 06–12–21 STEERING GEAR AND LINKAGE INSPECTION) (See 06–12–22 STEERING GEAR AND LINKAGE ASSEMBLY)
5	Power steering oil pump (See 06–12–27 POWER STEERING OIL PUMP REMOVAL/INSTALLATION [L3, L3 WITH TC]) (See 06–12–29 POWER STEERING OIL PUMP DISASSEMBLY/ASSEMBLY [L3, L3 WITH TC])

AIR BLEEDING

E6U061200000W02

Caution

- **Do not turn the steering wheel during the fluid level inspection, otherwise the fluid level changes and cannot be inspected correctly.**

1. Inspect the fluid level. (See06–12–4 POWER STEERING FLUID INSPECTION.)
2. Jack up the front of the vehicle and support it on safety stands.
3. Turn the steering wheel fully to the left and right several times with the engine not running.
4. Reinspect the fluid level.
   - If it has dropped, add fluid.
5. Repeat Steps 3 and 4 until the fluid level stabilizes.
   Lower the vehicle.
7. Start the engine and let it idle.
8. Turn the steering wheel fully to the left and right several times.
9. Verify that the fluid is not foamy and that the fluid level has not dropped.
   - If the fluid level has dropped, add fluid as necessary and repeat Steps 8 and 9.

POWER STEERING FLUID INSPECTION

E6U061232040W01

Fluid Level Inspection

1. Inspect the power steering fluid level.
   - Add fluid to the specified level as necessary.

Power steering fluid type
ATF M-III, M-V or equivalent (e.g. Dexron®III)

Power steering fluid capacity (approx. quantity)
L3 MTX: 0.77 L {0.81 US qt, 0.68 Imp qt}
L3 ATX: 0.84 L {0.89 US qt, 0.74 Imp qt}
AJ: 1.02 L {1.08 US qt, 0.90 Imp qt}
L3 WITH TC: 0.89 L {0.94 US qt, 0.78 Imp qt}

Fluid Leakage Inspection

1. Start the engine and let it idle.
2. Turn the steering wheel fully to the left and right to apply fluid pressure.

Caution
- **If the steering wheel is kept in the fully turned position for more than 5 seconds, the fluid temperature will rise excessively and adversely affect the oil pump.**

3. Inspect for fluid leakage.

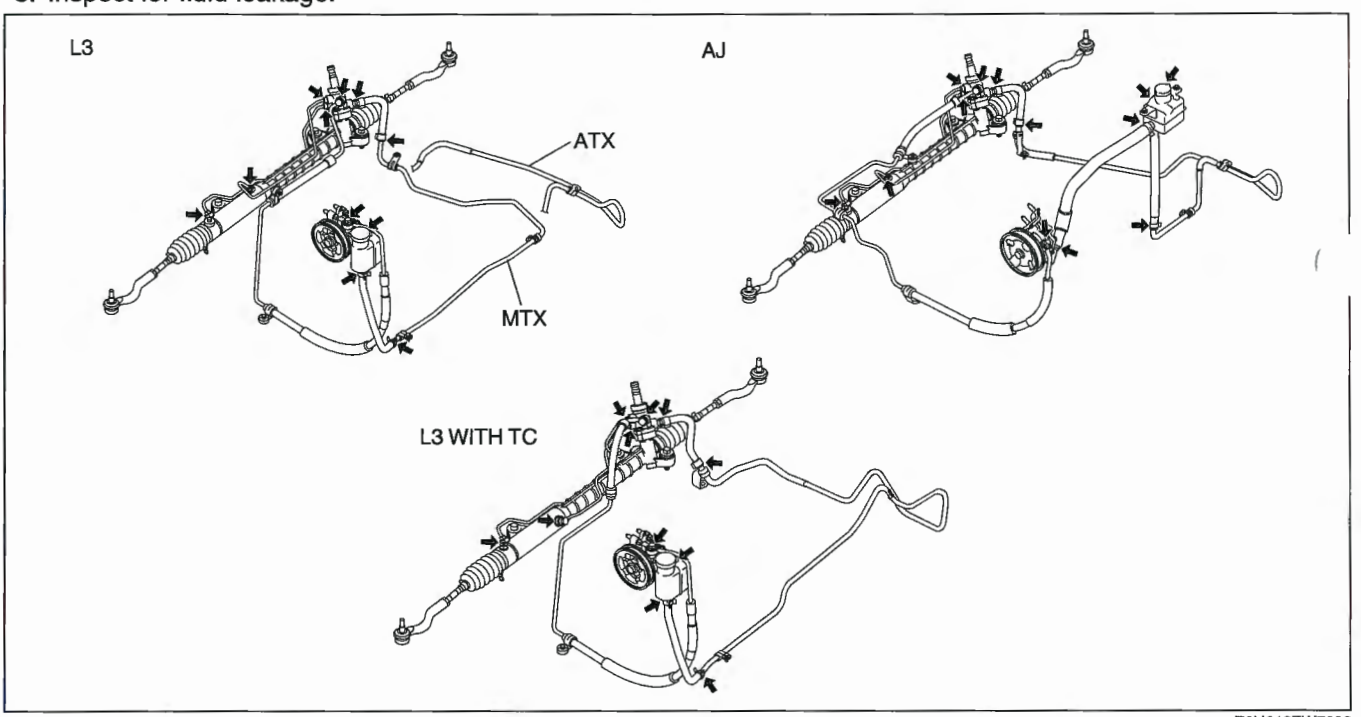

E6U612ZW7002

- If fluid leakage is found, replace related pipe or hose.

Note
- The points where fluid leakage may occur are indicated in the figure.

Fluid Pressure Inspection

1. Assemble the **SSTs** as shown in the figure.

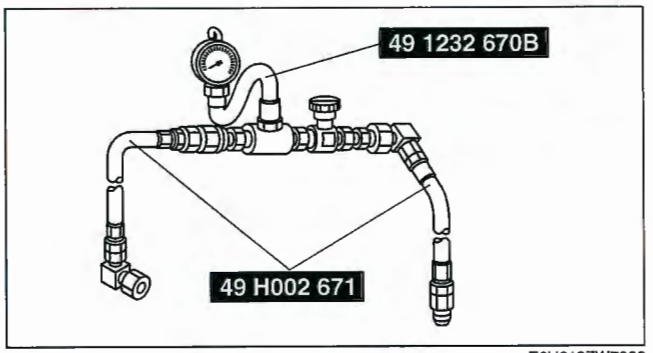

E6U612ZW7003

2. Disconnect the pressure pipe from the oil pump, and connect the **SSTs**.

   Tightening torque
   29.4—44.1 N·m {3.0—4.4 kgf·m, 22—32 ft·lbf}

3. Bleed the air from the system. (See 06–12–3 AIR BLEEDING.)
4. Open the gauge valve fully.
5. Start the engine and turn the steering wheel fully left and right to raise the fluid temperature to **50—60 °C {122—140 °F}**.

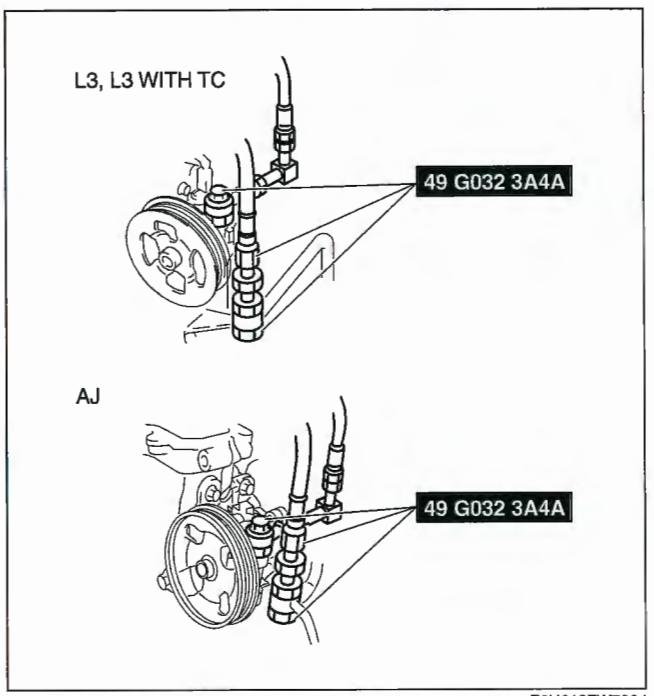

E6U612ZW7004

6. Close the gauge valve completely.
7. Increase the engine speed to **1,000—1,500 rpm** and measure the fluid pressure generated by the oil pump.
   - If the pressure is not within the specification, repair or replace the oil pump component.

Caution
- **If the valve is left closed for more than 5 seconds, the fluid temperature will rise excessively and adversely affect the oil pump.**

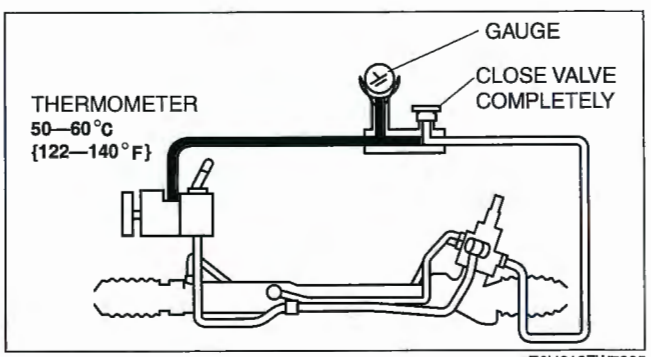

E6U612ZW7005

Oil pump fluid pressure
L3: 10.80—11.29 MPa {110.2—115.2 kgf/cm^2, 1567—1637 psi}
AJ: 11.31—11.80 MPa {115.4—120.3 kgf/cm^2, 1640—1711 psi}
L3 WITH TC: 11.30—11.70 MPa {116.0—119.0 kgf/cm^2, 1639—1696 psi}

8. Open the gauge valve fully and increase the engine speed to **1,000—1,500 rpm**.
9. Turn the steering wheel fully to the left and right, then measure the fluid pressure generated at the gear housing.
   - If the pressure is not within the specification, repair or replace the steering gear component.

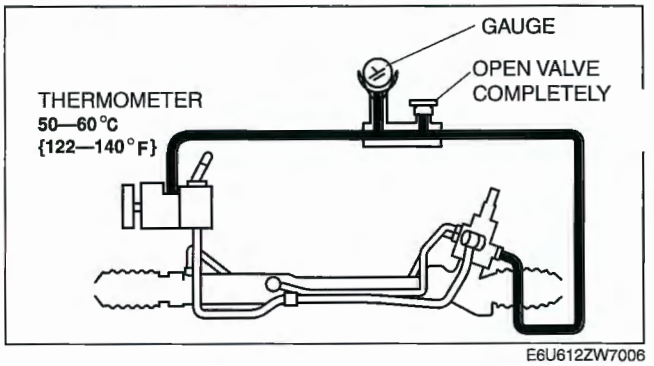

E6U612ZW7006

Caution
- **If the steering wheel is kept in the fully turned position for more than 5 seconds, the fluid temperature will rise excessively and adversely affect the oil pump.**

Gear housing fluid pressure
L3: 10.80—11.29 MPa {110.2—115.2 kgf/cm^2, 1567—1637 psi}
AJ: 11.31—11.80 MPa {115.4—120.3 kgf/cm^2, 1640—1711 psi}
L3 WITH TC: 11.30—11.70 MPa {116.0—119.0 kgf/cm^2, 1639—1696 psi}

10. Remove the **SSTs**. Install and tighten the pressure pipe to the specified torque.

Tightening torque
29.4—44.1 N·m {3.0—4.4 kgf·m, 22—32 ft·lbf}

11. Bleed the air from the system.

STEERING WHEEL AND COLUMN INSPECTION

E6U061232010W01

Steering Wheel Play Inspection

1. With the wheels in the straight-ahead position, gently turn the steering wheel to the left and right and verify that the play is within the specification.
   - If the play exceeds the specification, either the steering joints are worn or the backlash of the steering ge is excessive. Correct as necessary.

Steering wheel play
0—30 mm {0—1.18 in}

Steering Wheel Looseness Inspection

1. Move the steering wheel as shown in the figure to inspect for column bearing wear, steering shaft joint play, steering wheel looseness, and column looseness.
   - Repair or replace as necessary.

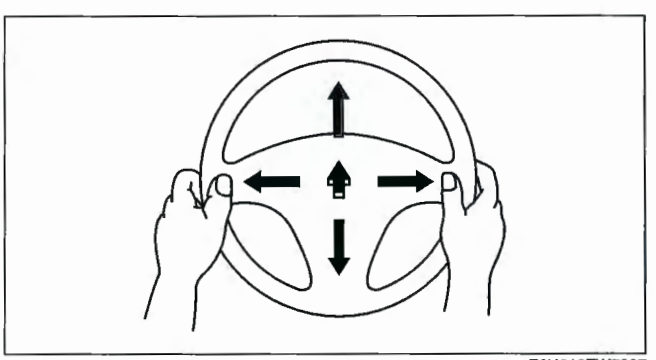
E6U612ZW7007

Steering Wheel Effort Inspection

1. Inspect the following points:
   - Tire size and tire pressure
   - Fluid level
   - Drive belt deflection
2. With the vehicle on a hard, level surface, put the wheels in the straight-ahead position.
3. Remove the air bag module.

Warning

- **Handling the air bag module improperly can accidentally deploy the air bag module, which may seriously injure you. Read AIR BAG SYSTEM WARNINGS before handling the air bag module. (See 08–10–3 SERVICE WARNINGS.) (See 08–10–5 SERVICE CAUTIONS.)**

4. Start the engine and warm the power steering fluid to **50—60 °C {122—140 °F}**.
5. Measure the steering wheel effort using a torque wrench.
   - If not within the specification, verify the following:
     — No air in steering system
     — No fluid leakage at hose or connectors
     — Function of oil pump and steering gear

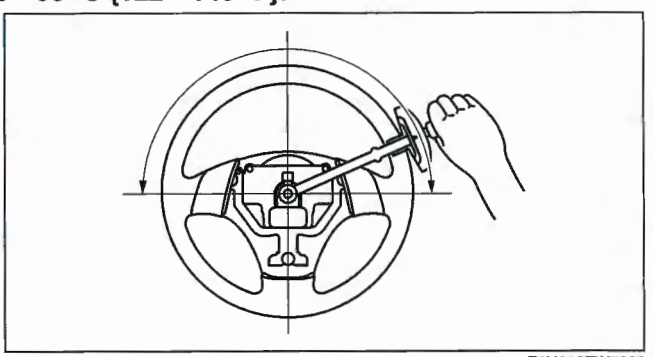

E6U612ZW7008

Steering wheel effort (reference value)
7.8 N·m {80 kgf·cm, 58 in·lbf} max.

Note

- To determine whether the steering effort is satisfactory or not, perform the inspection on another vehicle of the same model and under the same conditions, and compare the results.
- The steering wheel effort varies with conditions as shown below.
  — Road conditions, such as dry or wet, and asphalt or concrete.
  — Tire conditions, such as brand, wear, and tire pressure.

STEERING WHEEL AND COLUMN REMOVAL/INSTALLATION

E6U061232010W02

Warning

- **Handling the air bag module improperly can accidentally deploy the air bag module, which may seriously injure you. Read AIR BAG SYSTEM WARNINGS before handling the air bag module. (See 08–10–3 SERVICE WARNINGS.) (See 08–10–5 SERVICE CAUTIONS.)**

1. Remove in the order indicated in the table.
2. Install in the reverse order of removal.
3. If the steering lock component of a vehicle equipped with the advanced keyless system is replaced, perform the following procedure after installation.
   - Without immobilizer system
     — Steering lock unit programming (See 09–14–17 STEERING LOCK UNIT ID CODE REGISTRATION [WITH ADVANCED KEYLESS SYSTEM].)
   - With immobilizer system
     — Immobilizer system resetting (See 09–14–28 IMMOBILIZER SYSTEM COMPONENT REPLACEMENT/KEY ADDITION AND CLEARING [WITH ADVANCED KEYLESS SYSTEM].)

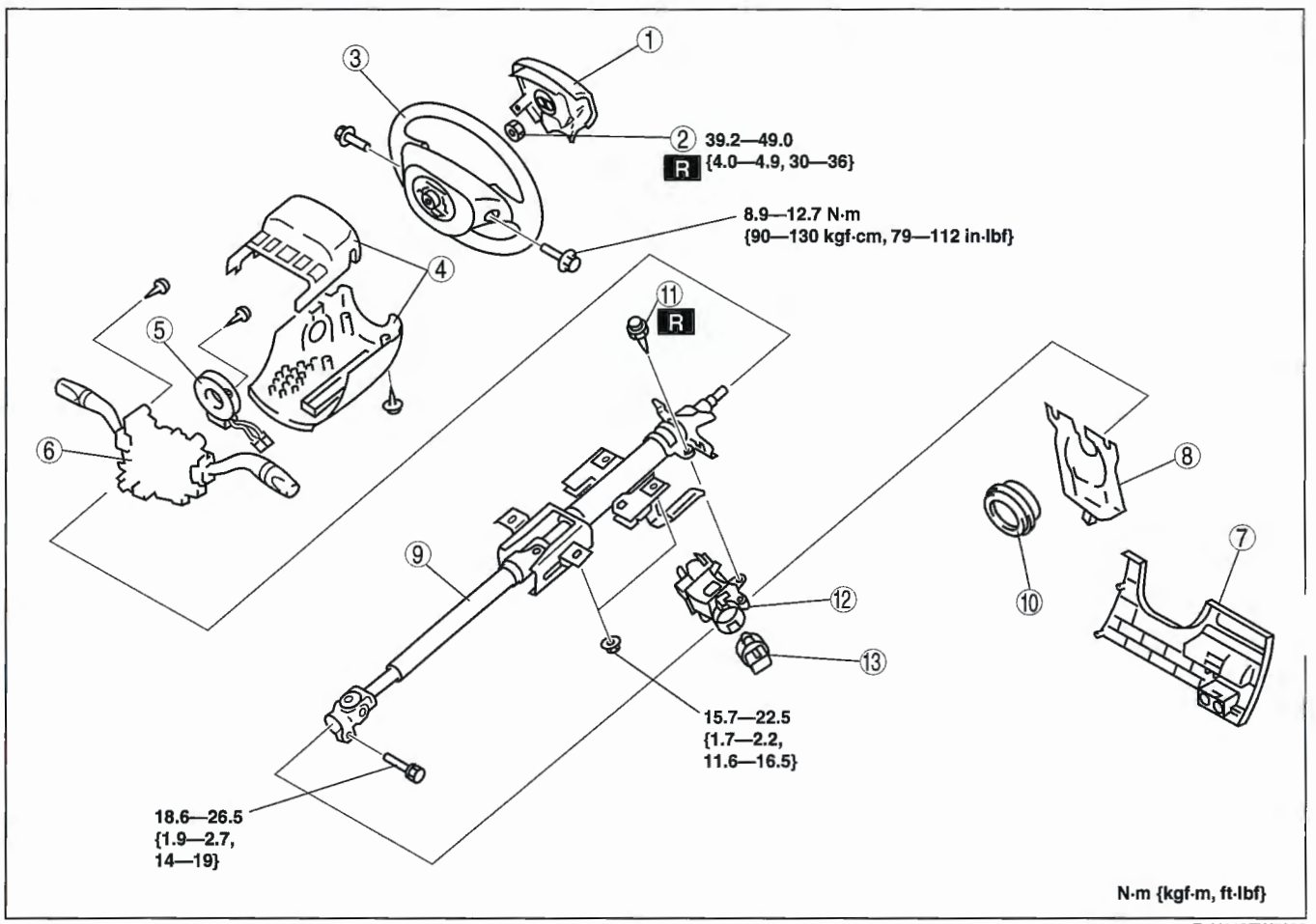

E6U612ZW7009

1	Air bag module (See 08–10–6 DRIVER-SIDE AIR BAG MODULE REMOVAL/INSTALLATION)
2	Locknut
3	Steering wheel (See 06–12–9 Steering Wheel Removal Note) (See 06–12–9 Steering Wheel Installation Note)
4	Column cover (See 09–17–6 COLUMN COVER REMOVAL/INSTALLATION.)
5	Clock spring (See 08–10–15 CLOCK SPRING REMOVAL/INSTALLATION)
6	Combination switch (See 09–18–19 COMBINATION SWITCH REMOVAL/INSTALLATION.)

7	Lower panel (See 09–17–7 LOWER PANEL REMOVAL/INSTALLATION.)
8	Joint cover
9	Steering shaft (See 06–12–9 Steering Shaft Installation Note)
10	Dust cover
11	Steering lock mounting bolts (See 06–12–9 Steering Lock Mounting Bolts Removal Note) (See 06–12–9 Steering Lock Mounting Bolts Installation Note)
12	Steering lock component
13	Ignition switch (See 09–21–3 IGNITION SWITCH REMOVAL/INSTALLATION.)

Steering Wheel Removal Note

Caution
- **Do not try to remove the steering wheel by hitting the shaft with a hammer. The column will collapse.**

1. Set the vehicle in the straight-ahead position.
2. Remove the steering wheel using a suitable puller.

Steering Lock Mounting Bolts Removal Note

1. Make a groove in the heads of the steering lock mounting bolts using a chisel and a hammer.
2. Remove the bolts using a screwdriver.
3. Disassemble the steering lock component.

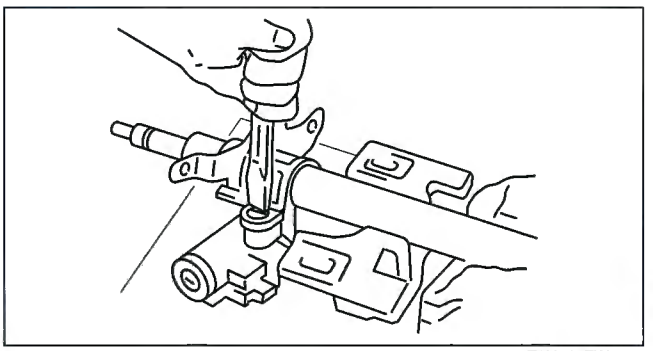

E6U612ZW7012

Steering Lock Mounting Bolts Installation Note

1. Assemble the steering lock component to the steering shaft.
2. Verify that the lock operates correctly.
3. Install new steering lock mounting bolts.
4. Tighten the bolts until the heads break off.

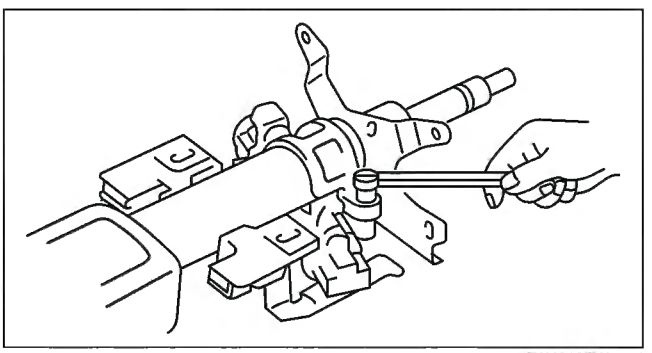

E6U612ZW7011

Steering Shaft Installation Note

Caution
- **Do not apply a shock in the axial direction of the shaft.**

1. Lock the tilt lever.
2. Tighten bolt A.
3. Tighten nut B.
4. Tighten nut C.

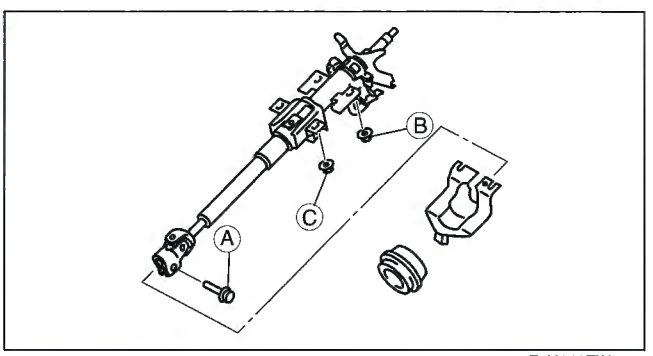

E6U612ZW7010

Steering Wheel Installation Note

1. Make sure the wheels in the straight-ahead position, and install the steering wheel.

STEERING SHAFT INSPECTION

1. Inspect the following.
   (1) Column bearing for damage
   (2) Steering shaft length
      - Replace the steering shaft component as necessary.

   Steering shaft length
   211.6 mm {8.3 in}

E6U061232100W01

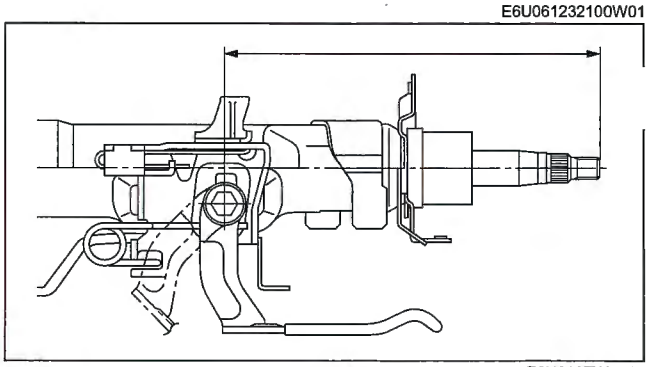

E6U612ZW7013

2. Inspect the tilt and telescope operation.
   (1) Verify that the adjusting lever moves smoothly from unlock position to lock position.
   (2) Verify that the steering shaft is fixed firmly when the adjusting lever is locked.
      - Replace the steering shaft component as necessary.

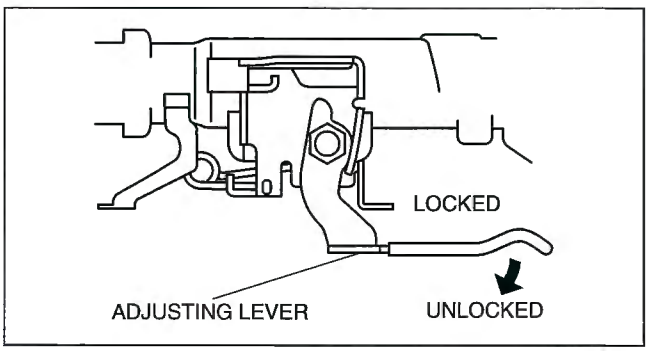

B6U0612W008

STEERING GEAR AND LINKAGE REMOVAL/INSTALLATION [L3]

E6U061232960W01

Caution

- **Performing the following procedures without first removing the ABS wheel-speed sensor may possibly cause an open circuit in the harness if it is pulled by mistake. Before performing the following procedures, remove the ABS wheel-speed sensor (axle side) and fix it to an appropriate place where the sensor will not be pulled by mistake while servicing the vehicle.**

1. Remove the ABS wheel-speed sensor. (See 04–13–8 FRONT ABS WHEEL-SPEED SENSOR REMOVAL/ INSTALLATION.)
2. Remove in the order indicated in the table.
3. Install in the reverse order of removal.
4. After installation, inspect the front wheel alignment. (See 02–11–2 FRONT WHEEL ALIGNMENT.)

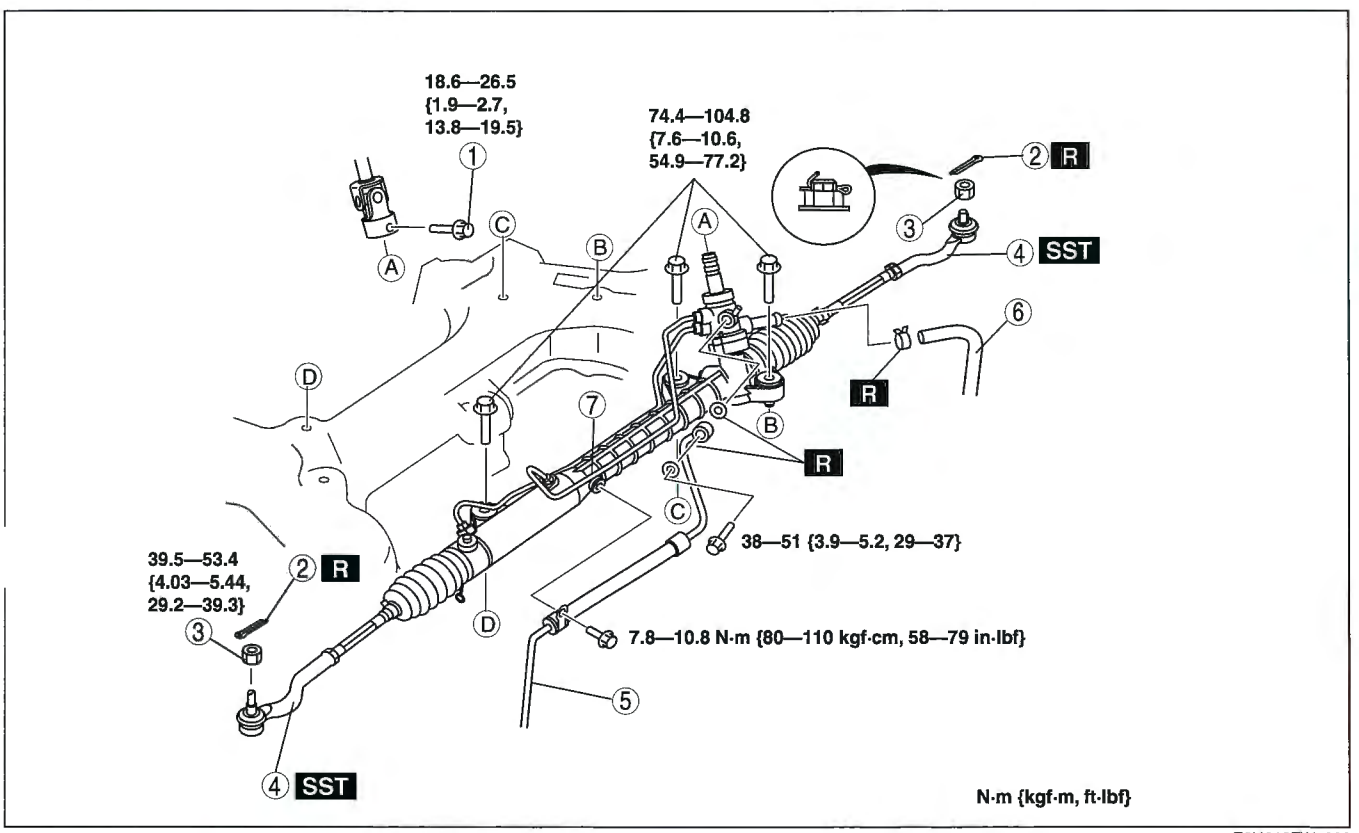

E6U612ZW5003

1	Bolt (intermediate shaft) (See 06–12–12 Bolt (Intermediate Shaft) Removal Note.) (See 06–12–13 Bolt (Intermediate Shaft) Installation Note.)
2	Cotter pin
3	Nuts (tie-rod end ball joint)
4	Tie-rod end ball joint (See 06–12–12 Tie-rod End Ball Joint Removal Note.)

5	Pressure pipe
6	Return hose
7	Steering gear and linkage (See 06–12–12 Steering Gear and Linkage Removal Note.) (See 06–12–13 Steering Gear and Linkage Installation Note.)

Bolt (Intermediate Shaft) Removal Note

1. Mark the pinion shaft and gear housing for proper installation.

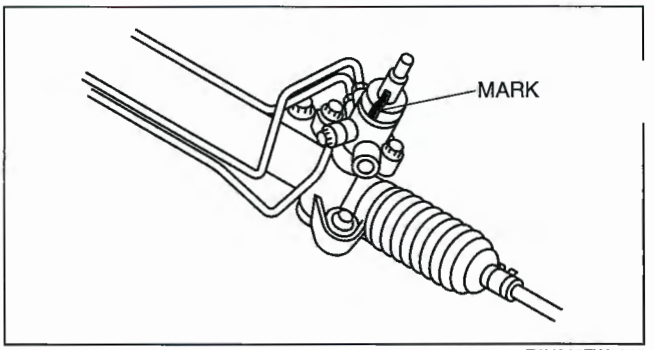

E6U612ZW7015

Tie-rod End Ball Joint Removal Note

1. Remove the tie-rod nut.
2. Separate the tie-rod end from the steering knuckle using the **SSTs**.

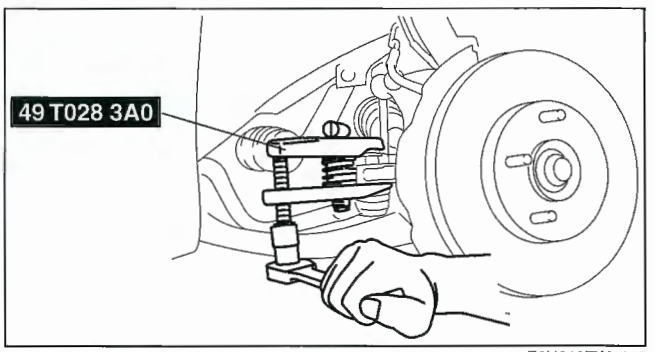

E6U612ZW7016

Steering Gear and Linkage Removal Note

Caution

- **Excessively loosening the crossmember nuts may possibly cause the crossmember to fall off. The crossmember nuts must remain threaded on the studs when loosening.**

1. Support the crossmember using a jack before removing the crossmember bracket.
2. Loosen the jack and lower the crossmember.
3. Remove the steering gear and linkage by pulling it from the left side.

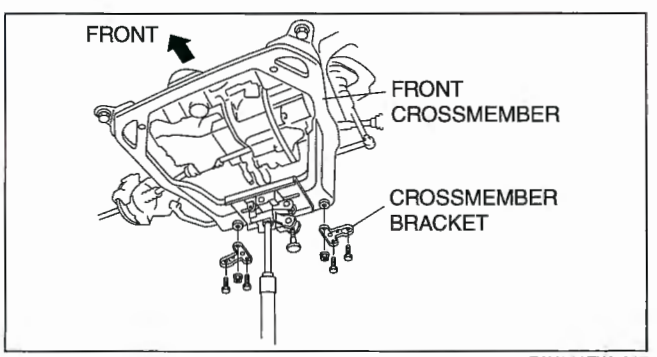

E6U612ZW7017

Steering Gear and Linkage Installation Note

1. Tighten bolts loosely.
2. Tighten the mounting bracket bolts to the specified torque in the order shown.

   Tightening torque
   74.4—104.8 N·m {7.6—10.6 kgf·m, 55—77 ft·lbf}

3. Tighten the crossmember bracket installation nuts and bolts.

   Tightening torque
   Nut: 119.6—154.8 N·m {12.2—15.7 kgf·m, 89—114 ft·lbf}
   Bolt: 93.1—116.6 N·m {9.50—11.88 kgf·m, 68.67—85.99 ft·lbf}

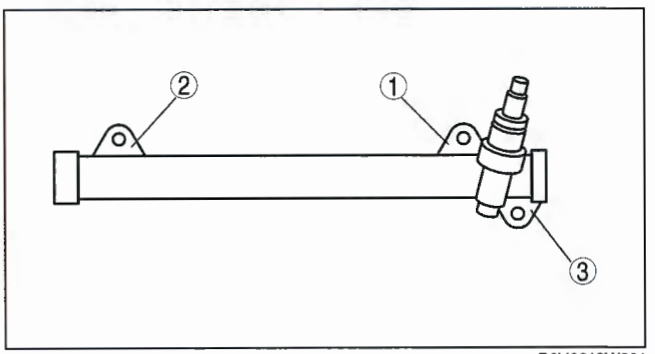

B6U0612W001

Bolt (Intermediate Shaft) Installation Note

1. Align the marks and install the intermediate shaft and bolt.

STEERING GEAR AND LINKAGE REMOVAL/INSTALLATION [AJ]

E6U061232960W02

Caution

- **Performing the following procedures without first removing the ABS wheel-speed sensor may possibly cause an open circuit in the harness if it is pulled by mistake. Before performing the following procedures, remove the ABS wheel-speed sensor (axle side) and fix it to an appropriate place where the sensor will not be pulled by mistake while servicing the vehicle.**

1. Remove the joint cover.
2. Remove the ABS wheel-speed sensor. (See 04–13–8 FRONT ABS WHEEL-SPEED SENSOR REMOVAL/INSTALLATION.)
   Remove the under cover and splash shield.
4. Separate the stabilizer control link (shock absorber side). (See02–13–18 FRONT STABILIZER REMOVAL/INSTALLATION.)
5. Separate the front lower arm (front and rear) ball joint.02–13–10 FRONT LOWER ARM (FRONT) REMOVAL/INSTALLATION.)
6. Remove the shock absorber bolt (lower side). (See02–13–3 FRONT SHOCK ABSORBER AND SPRING REMOVAL/INSTALLATION.)
7. Remove in the order indicated in the table.
8. Install in the reverse order of removal.

9. After installation, inspect the front wheel alignment. (See 02–11–2 FRONT WHEEL ALIGNMENT.)

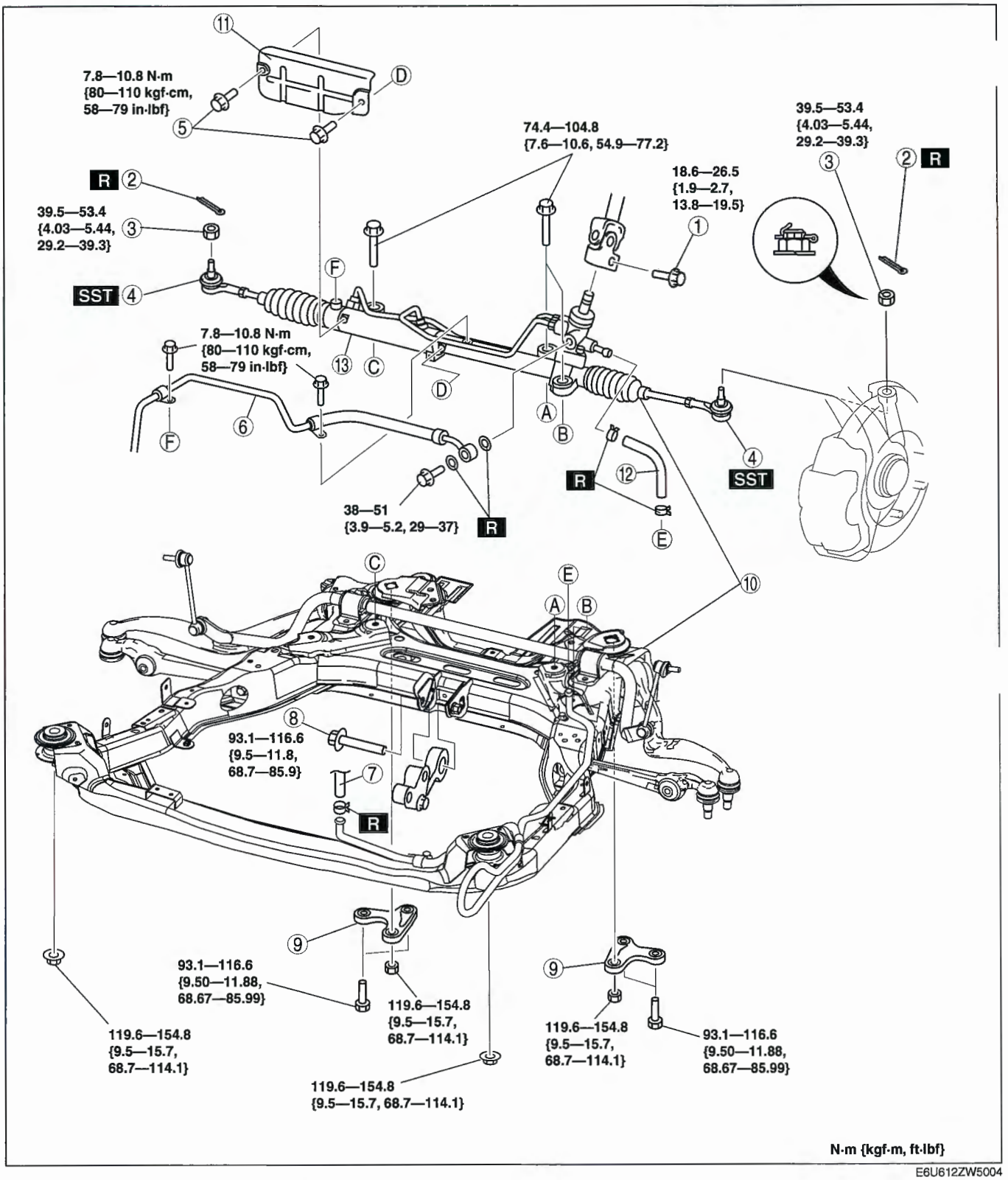

E6U612ZW5004

1	Bolt (intermediate shaft) (See 06–12–12 Bolt (Intermediate Shaft) Removal Note.) (See 06–12–13 Bolt (Intermediate Shaft) Installation Note.)
2	Cotter pin
3	Nuts (tie-rod end ball joint)
4	Tie-rod end ball joint (See 06–12–12 Tie-rod End Ball Joint Removal Note.)
5	Insulator bolts
6	Pressure pipe
7	Return hose
8	No.1 engine mount center bolt

9	Crossmember bracket (See 06–12–15 Crossmember Bracket Removal Note.)
10	Crossmember component, steering gear and linkage (See 06–12–15 Crossmember Component, Steering Gear and Linkage Removal Note.) (See 06–12–15 Crossmember Component, Steering Gear and Linkage Installation Note.)
11	Insulator (See 06–12–15 Insulator Installation Note.)
12	Return hose
13	Steering gear and linkage (See 06–12–13 Steering Gear and Linkage Installation Note.)

Crossmember Bracket Removal Note

Warning

- **Removing the crossmember is dangerous. The crossmember component could fall and cause serious injury or death. Verify that the jack securely supports the crossmember component before removing the crossmember bracket.**

1. Support the crossmember component with a jack and remove the nuts.
2. Remove the crossmember bracket.

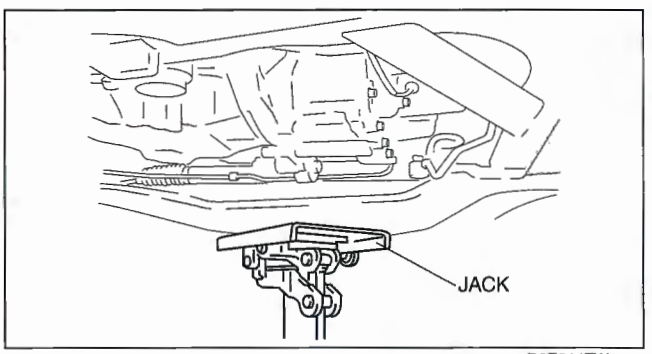

D6E614ZW3014

Crossmember Component, Steering Gear and Linkage Removal Note

Warning

- **Removing the crossmember is dangerous. The crossmember component could fall and cause serious injury or death. Verify that the jack securely supports the crossmember component before removing the crossmember bracket.**

1. Remove the crossmember component, steering gear and linkage.

Insulator Installation Note

1. Install the insulator. (Do not install the bolts.)

Crossmember Component, Steering Gear and Linkage Installation Note

Warning

- **Installing the crossmember is dangerous. The crossmember component could fall and cause serious injury or death. Verify that the jack securely supports the crossmember component before installing the crossmember components, steering gear and linkage.**

1. Install the crossmember component, steering gear and linkage.

STEERING GEAR AND LINKAGE REMOVAL/INSTALLATION [L3 WITH TC]

E6U061232960W06

Caution

- **Performing the following procedures without first removing the ABS wheel-speed sensor may possibly cause an open circuit in the harness if it is pulled by mistake. Before performing the following procedures, remove the ABS wheel-speed sensor (axle side) and fix it to an appropriate place where the sensor will not be pulled by mistake while servicing the vehicle.**

1. Remove the joint cover.
2. Remove the ABS wheel-speed sensor. (See 04–13–8 FRONT ABS WHEEL-SPEED SENSOR REMOVAL/INSTALLATION.)
3. Remove the under cover and splash shield.
4. Separate the stabilizer control link (shock absorber side). (See02–13–18 FRONT STABILIZER REMOVAL/INSTALLATION.)
5. Separate the front lower arm (front and rear) ball joint. (See 02–13–10 FRONT LOWER ARM (FRONT) REMOVAL/INSTALLATION.)
6. Remove the shock absorber bolt (lower side). (See02–13–3 FRONT SHOCK ABSORBER AND SPRING REMOVAL/INSTALLATION.)
7. Remove in the order indicated in the table.
8. Install in the reverse order of removal.
9. After installation, inspect the front wheel alignment. (See 02–11–2 FRONT WHEEL ALIGNMENT.)

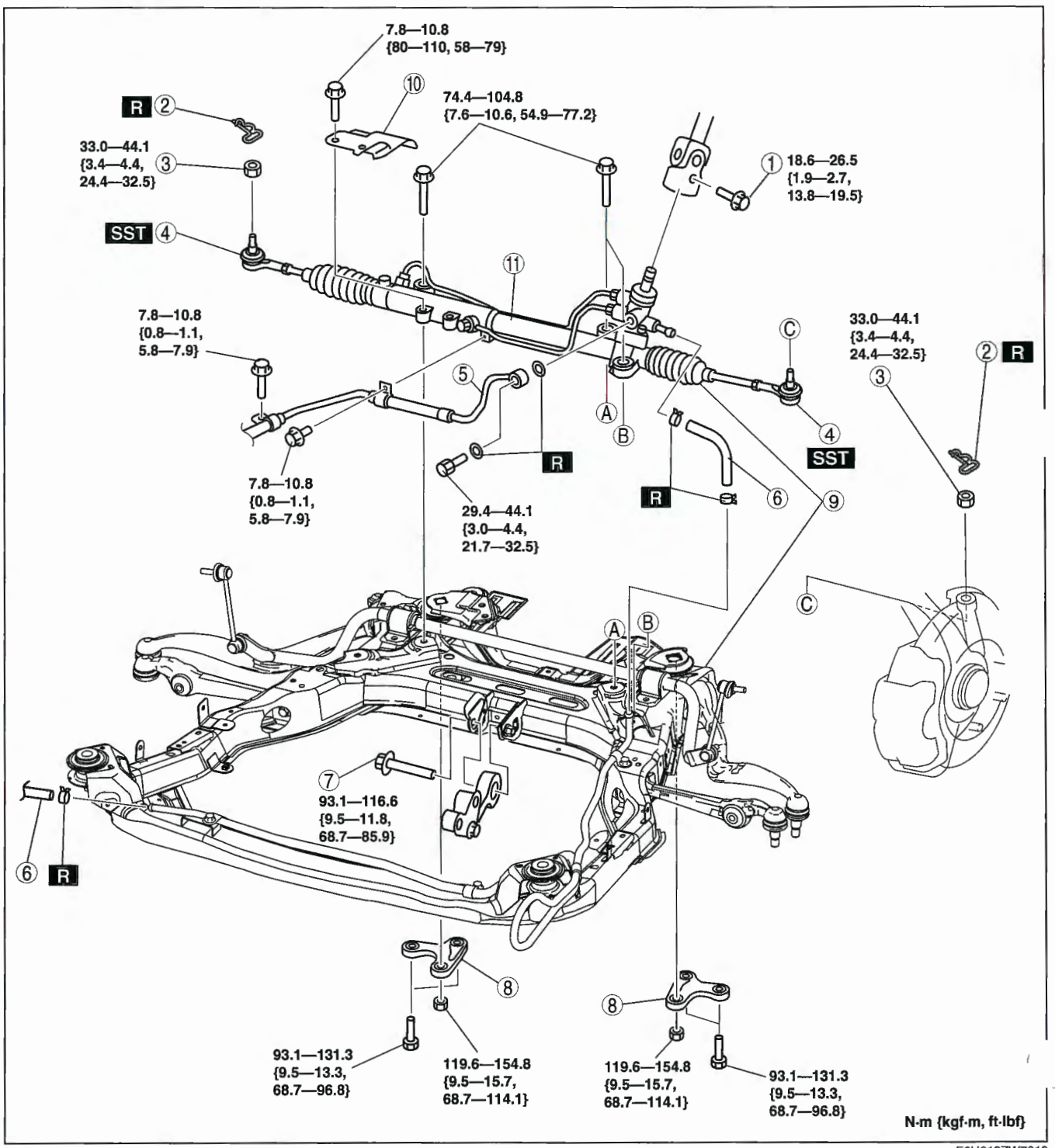

E6U612ZW7018

1	Bolt (intermediate shaft) (See 06–12–12 Bolt (Intermediate Shaft) Removal Note.) (See 06–12–13 Bolt (Intermediate Shaft) Installation Note.)
2	Cotter pin
3	Nut (tie-rod end ball joint)
4	Tie-rod end ball joint (See 06–12–12 Tie-rod End Ball Joint Removal Note.)
5	Pressure pipe
6	Return hose
7	No.1 engine mount center bolt
8	Crossmember bracket (See 06–12–15 Crossmember Bracket Removal Note)
9	Crossmember component, steering gear and linkage (See 06–12–15 Crossmember Component, Steering Gear and Linkage Removal Note) (See 06–12–15 Crossmember Component, Steering Gear and Linkage Installation Note)
10	Insulator
11	Steering gear and linkage (See 06–12–13 Steering Gear and Linkage Installation Note)

STEERING GEAR AND LINKAGE DISASSEMBLY

E6U061232960W07

Caution

- **Place copper plates, rag, or similar material in a vise, when securing the mounting bracket portion of the steering gear.**

1. Disassemble in the order indicated in the table.

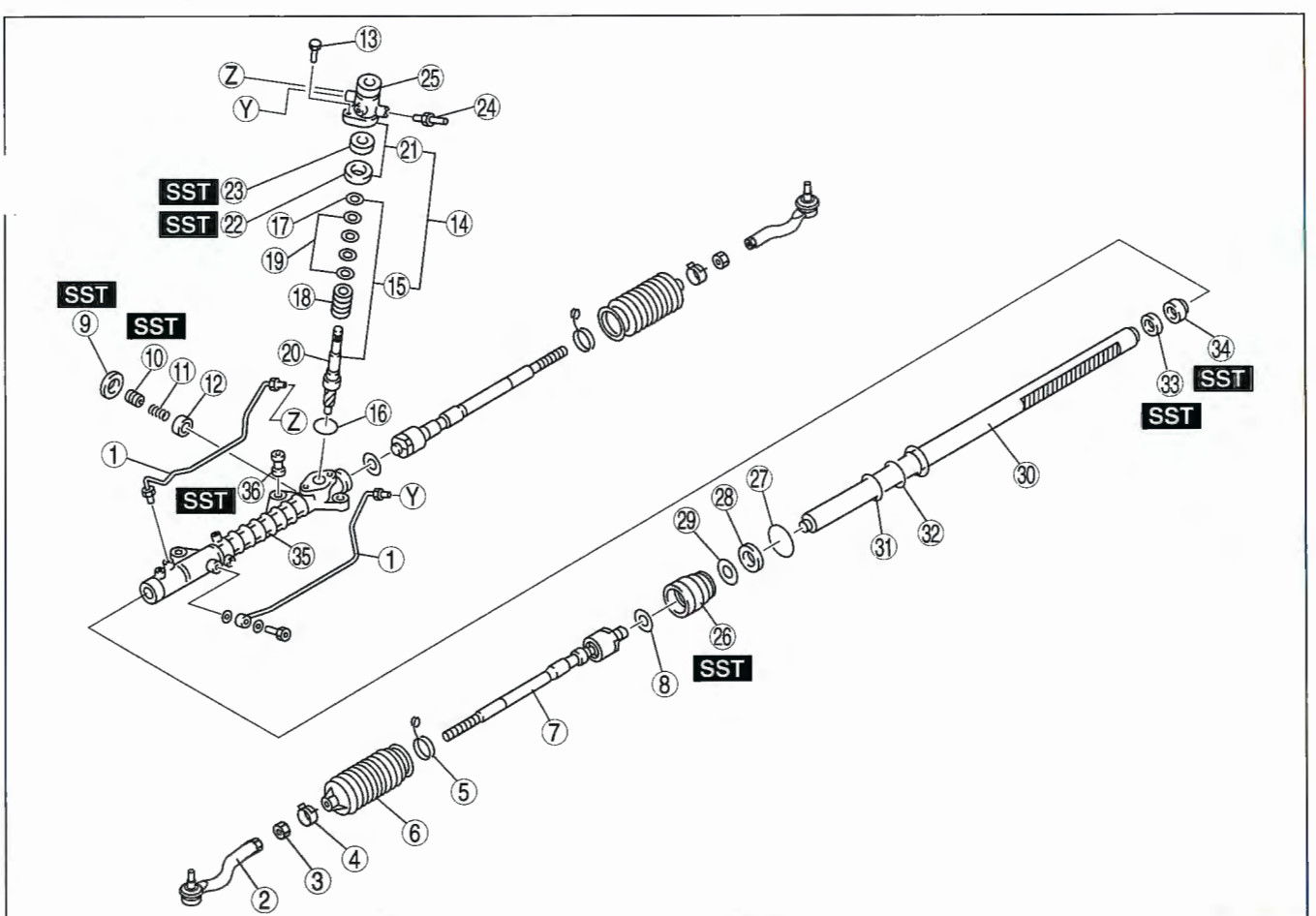

A6E0612W028

1	Oil pipe
2	Tie-rod end
3	Locknut
4	Boot clamp
5	Boot band
6	Boot
7	Tie rod (See 06–12–18 Tie Rod Disassembly Note)

8	Washer
9	Locknut (adjusting cover) (See 06–12–18 Locknut (Adjusting Cover) Disassembly Note)
10	Adjusting cover (See 06–12–19 Adjusting Cover Disassembly Note)
11	Yoke spring
12	Support yoke
13	Bolt
14	Pinion shaft and housing component (See 06–12–19 Pinion Shaft and Housing Component Disassembly Note)
15	Pinion shaft component (See 06–12–19 Pinion Shaft Component Disassembly Note)
16	O-ring
17	Snap ring (See 06–12–19 Snap Ring Disassembly Note)
18	Control valve component
19	Seal ring
20	Pinion shaft
21	Valve housing component
22	Upper bearing (See 06–12–20 Upper Bearing, Oil Seal Disassembly Note)
23	Oil seal (See 06–12–20 Upper Bearing, Oil Seal Disassembly Note)
24	Return pipe
25	Valve Housing
26	Holder (See 06–12–20 Holder Disassembly Note)
27	O-ring
28	U-gasket
29	Backup ring
30	Steering rack
31	Seal ring
32	O-ring
33	Oil seal (See 06–12–20 Oil Seal, Inner Guide Disassembly Note)
34	Inner guide (See 06–12–20 Oil Seal, Inner Guide Disassembly Note)
35	Gear housing
36	Mounting rubber (See 06–12–20 Mounting Rubber Disassembly Note)

Tie Rod Disassembly Note

1. Unclamp the washer.
2. Remove the tie rod.

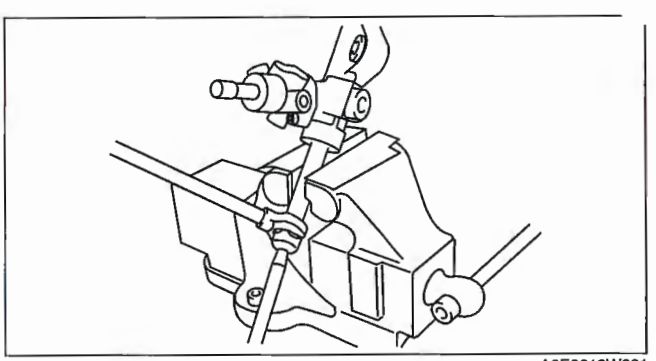

A6E0612W031

Locknut (Adjusting Cover) Disassembly Note

1. Remove the locknut using the **SST**.

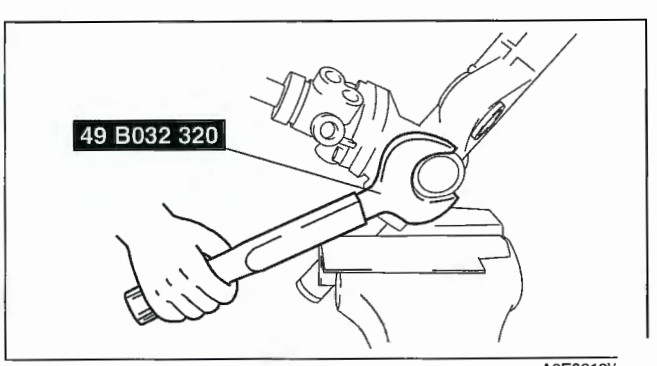

A6E0612V

Adjusting Cover Disassembly Note

1. Remove the adjusting cover.

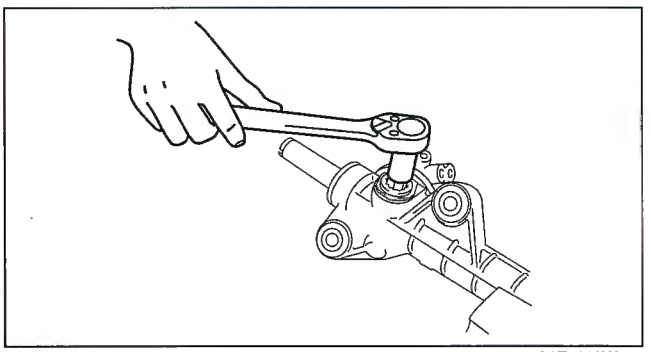

A6E0612W033

Pinion Shaft and Housing Component Disassembly Note

1. Hold the pinion shaft as shown, and pull out the pinion shaft and housing component.

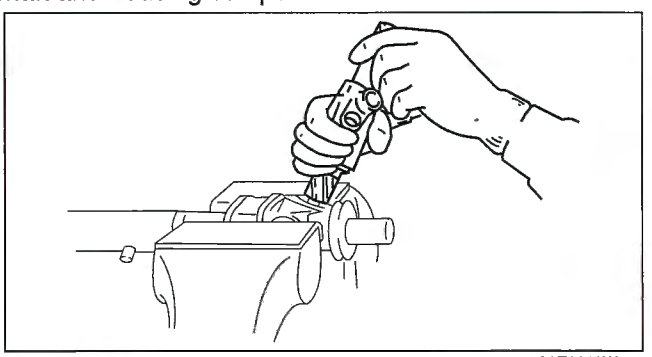

A6E0612W038

Pinion Shaft Component Disassembly Note

Note

- If the pinion shaft does not come out easily, remove it using a press.

1. Push out the pinion shaft component from the valve housing as shown.

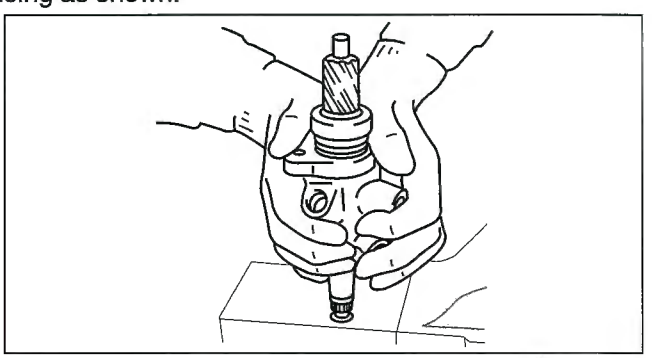

A6E0612W034

Snap Ring Disassembly Note

1. Carefully remove the snap ring without damaging the pinion shaft component.

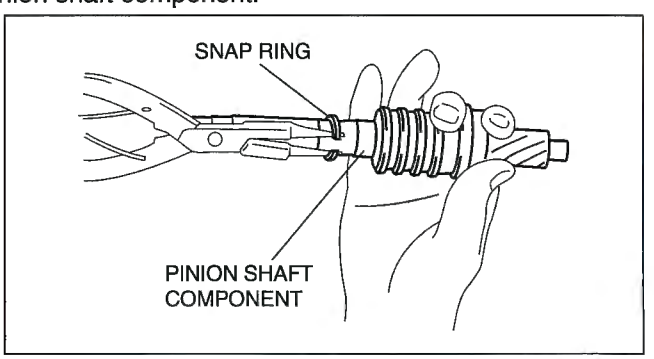

D6E614ZW3015

Upper Bearing, Oil Seal Disassembly Note

1. Set the **SST** as shown.
2. Using a press, remove the oil seal and upper bearing without applying pressure to the edge of the valve housing.

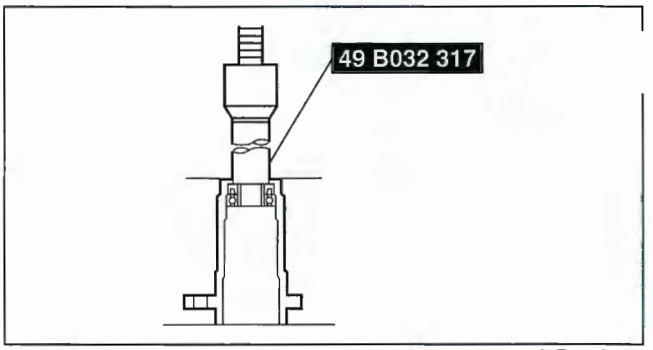

A6E0612W035

Holder Disassembly Note

1. Cut away the staked area by using a drill.

   Caution
   - **Carefully pull out the holder without damaging the U gasket.**

2. Disassemble the holder.

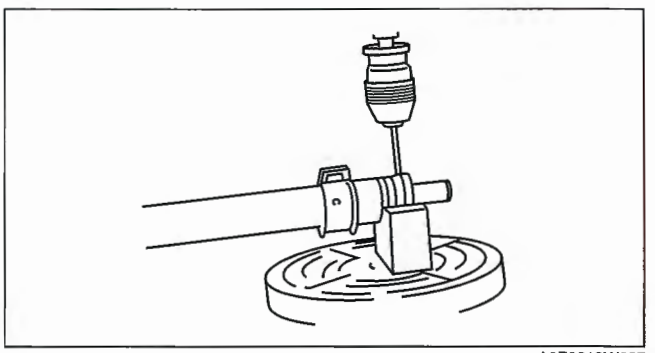
A6E0612W037

Oil Seal, Inner Guide Disassembly Note

1. Set the **SSTs** into the valve side.
2. Install the **SST** to the gear housing.
3. Press out the oil seal and inner guide.

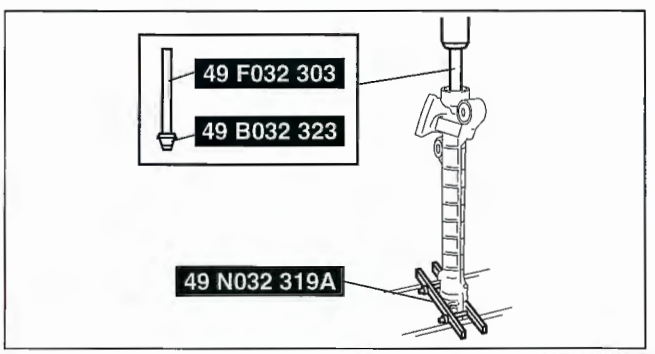

A6E0612W086

Mounting Rubber Disassembly Note

- Press the mounting rubber out from the gear housing using the **SSTs** and a press.

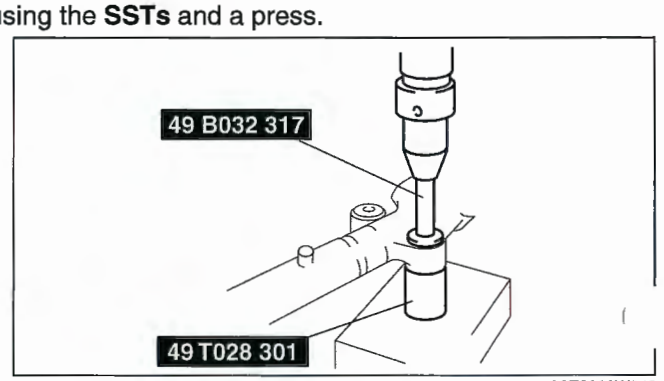

A6E0612W040

STEERING GEAR AND LINKAGE INSPECTION

E6U061232960W08

Rack Inspection

1. Inspect the rack for cracking, damage, and tooth wear. Replace it as necessary.
   Measure the runout of the rack.

   Steering rack runout
   Large diameter portion (near point A): 0.15 mm {0.006 in} max.
   Small diameter portion (near point B): 0.20 mm {0.008 in} max.

3. If not within the specification, replace the rack.

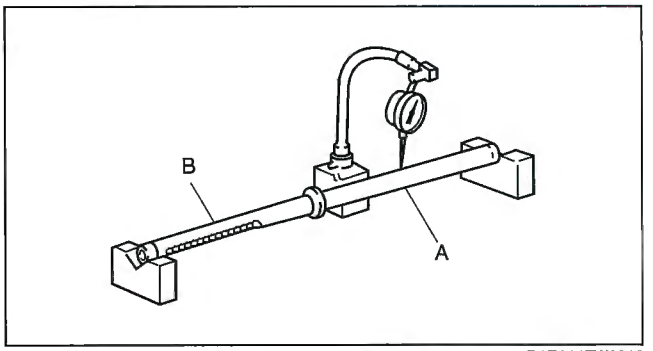

D6E614ZW3016

Tie-rod End Inspection

1. Inspect the tie-rod end for damage and boot cracks. Replace it as necessary.
2. Inspect the ball joint for looseness. Replace the tie-rod end as necessary.
3. Rotate the ball joint five times.
4. Measure the rotation torque of the ball joint using the **SST** and a pull scale.

   Tie-rod end rotational torque
   0.6—2.0 N·m {6.2—20.3 kgf·cm, 5.4—17.7 in·lbf}
   [Pull scale reading 6.0—20.0 N {0.62—2.03 kgf, 1.4—4.4 lbf}]

5. If not within the specification, replace the tie-rod end.

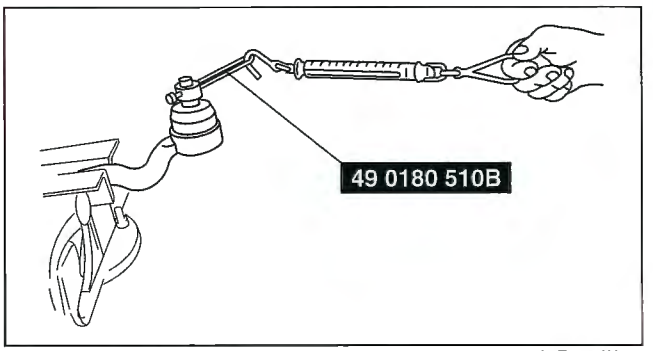

A6E6316W100

Tie rod Inspection

1. Inspect the tie rod for bending and damage. Replace it as necessary.
2. Inspect the ball joint for looseness. Replace the tie rod as necessary.
3. Swing the tie rod five times.
4. Measure the swinging torque using a pull scale.

   Tie rod swing torque
   0.4—4.0 N·m {4.1—40.7 kgf·cm, 3.6—35.4 in·lbf}
   [Pull scale reading 4.0—40.0 N {0.41—4.07 kgf, 0.9—8.9 lbf}]

5. If not within the specification, replace the tie-rod.

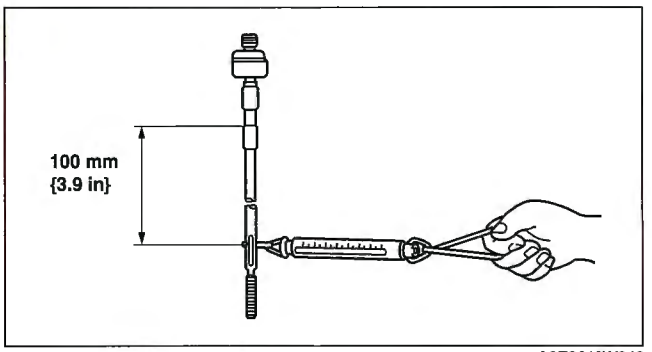

A6E0612W043

STEERING GEAR AND LINKAGE ASSEMBLY

E6U061232960W09

Caution

- **Place copper plates, rag, or similar material in a vise, when secure the mounting bracket portion the steering gear.**

1. Assemble in the order indicated in the table.

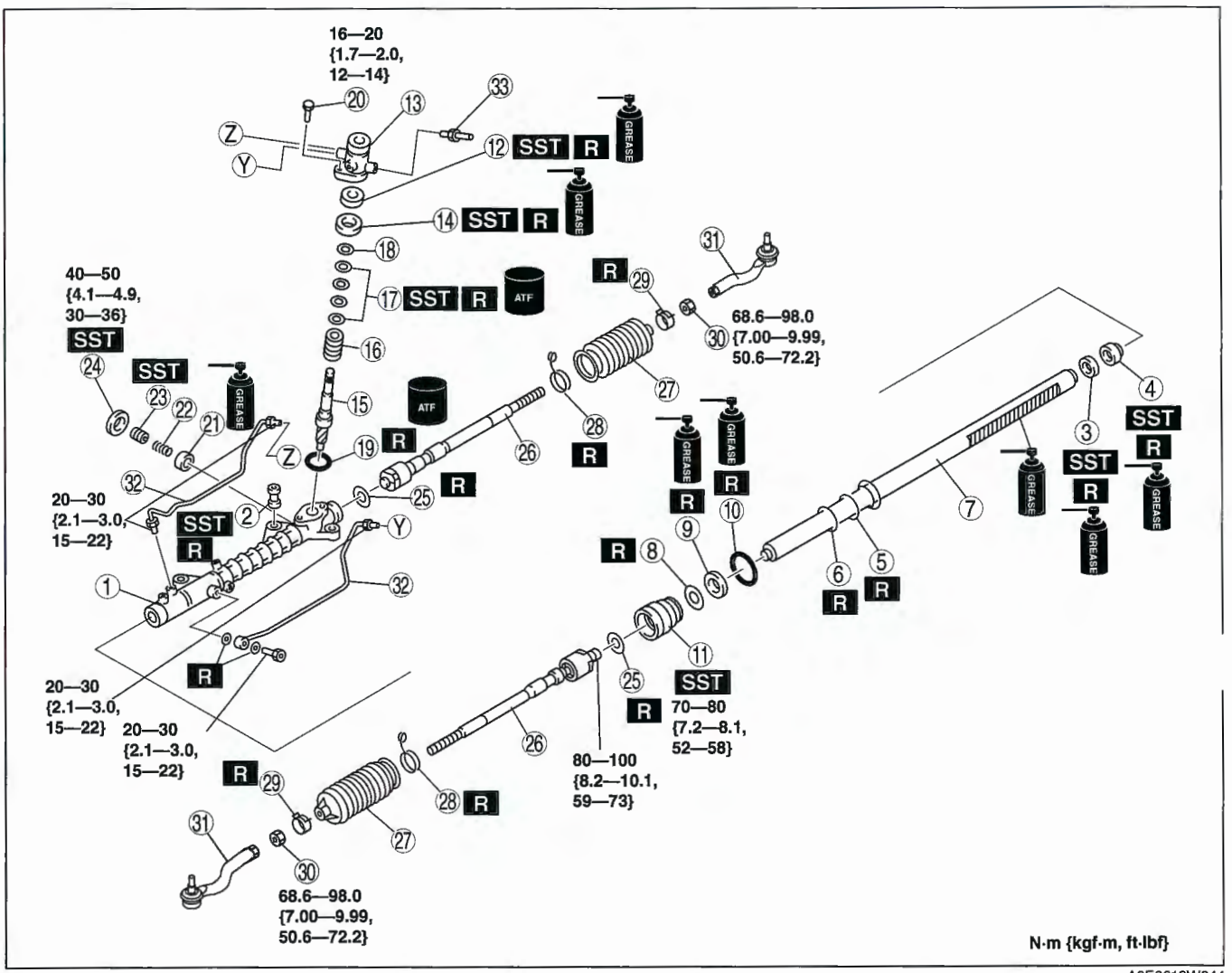

A6E0612W044

1	Gear housing
2	Mounting rubber (See 06–12–23 Mounting Rubber Assembly Note)
3	Oil seal (See 06–12–23 Oil Seal, Inner Guide Assembly Note)
4	Inner guide (See 06–12–23 Oil Seal, Inner Guide Assembly Note)
5	O-ring
6	Seal ring
7	Steering rack
8	Backup ring
9	U-gasket
10	O-ring
11	Holder (See 06–12–24 Holder Assembly Note)

12	Oil seal (See 06–12–25 Oil Seal Assembly Note)
13	Valve housing
14	Upper bearing (See 06–12–25 Upper Bearing Assembly Note)
15	Pinion shaft
16	Control valve
17	Seal ring (See 06–12–25 Seal Ring Assembly Note)
18	Snap ring
19	O-ring
20	Bolt
21	Support yoke
22	Yoke spring
23	Adjusting cover (See 06–12–26 Adjusting Cover Assembly Note)
24	Locknut (adjusting cover)

25	Washer
26	Tie rod
27	Boot
28	Boot band
29	Boot clamp
30	Locknut
31	Tie-rod end
32	Oil pipe
33	Return pipe

Mounting Rubber Assembly Note

1. Apply soapy water to the rubber part of the mounting rubber.
2. Press the mounting rubber until the mounting rubber end comes out completely from the gear housing using the **SSTs** and a press.

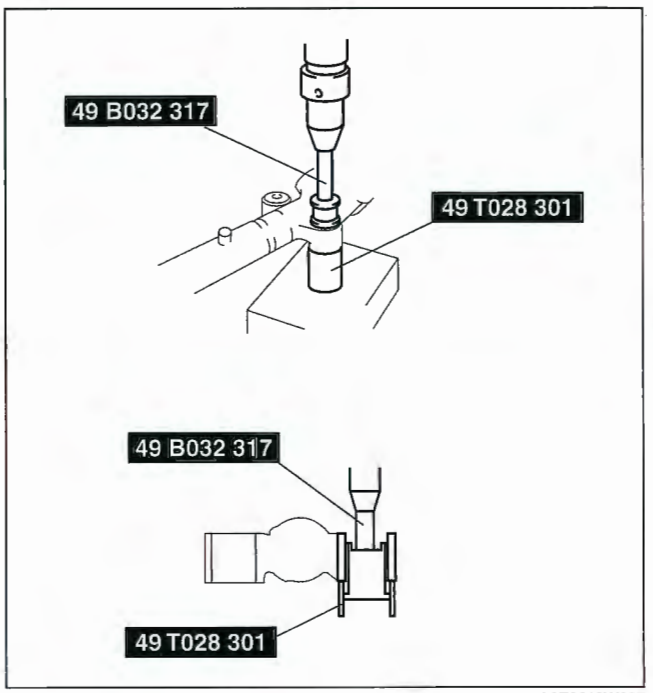

A6E0612W087

3. Reverse the gear housing, then press the mounting rubber until the mounting rubber end comes out completely from the other side. At this time, mounting rubber end and steel pipe are aligned.

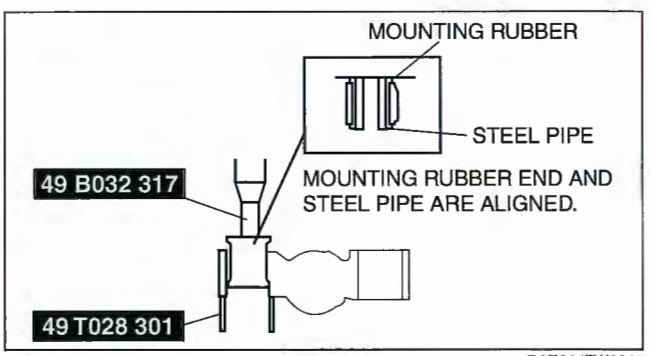

D6E614ZW3017

Oil Seal, Inner Guide Assembly Note

1. Install a new O-ring and a new seal ring to the rack's piston.
2. After installing the seal ring, seat it properly at the piston circumference.
3. Apply grease to a new oil seal and inner guide.
4. Install the oil seal to the **SSTs**.

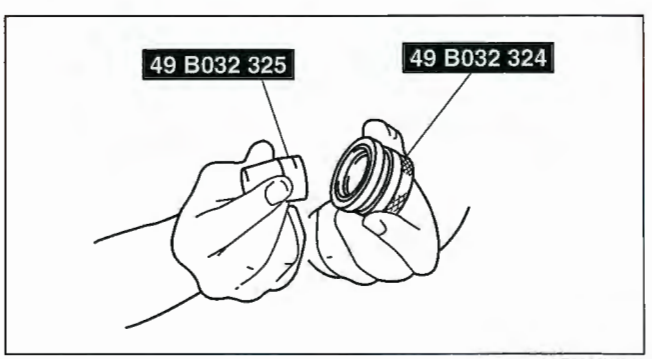

A6E0612W048

5. Using the **SST**, place the oil seal and inner guide at the edge of the steering rack's pinion, and remove the **SST**.

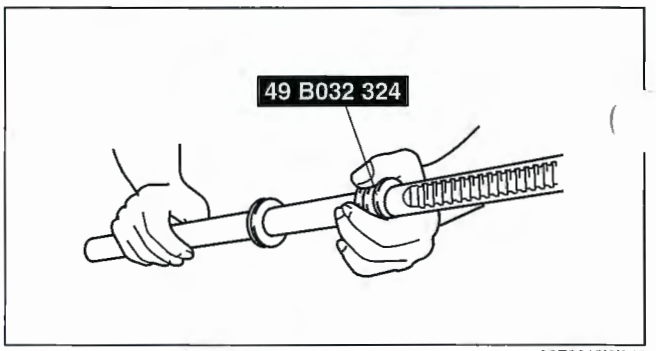

A6E0612W049

6. After installing the steering rack to the gear housing, press the oil seal and inner guide using the **SSTs** until the force required suddenly increases.

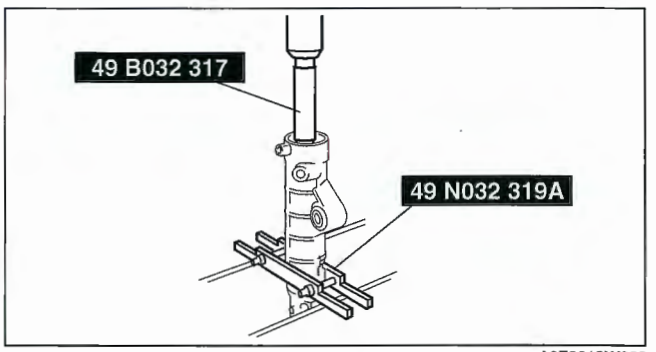

A6E0612W039

Holder Assembly Note

1. Apply grease to the U-gasket and O-ring.
2. Assemble the U-gasket, backup ring and O-ring into the holder.
3. Assemble the **SST** to the steering rack.

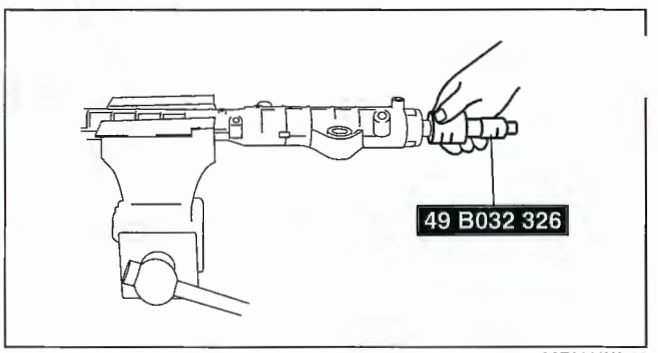

A6E0612W090

4. Stake the holder to the cylinder using a punch.

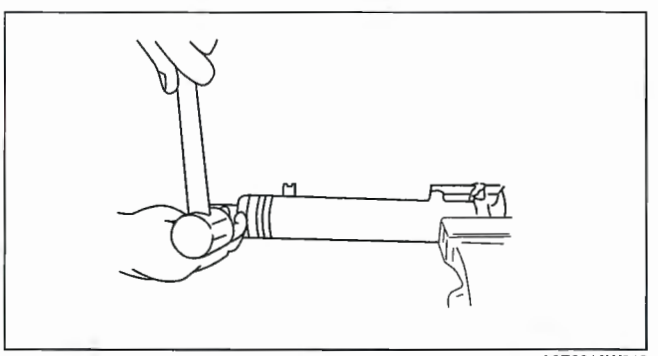

A6E6316W012

Oil Seal Assembly Note

1. Apply grease to a new oil seal.
2. Press in the new oil seal using the **SSTs**.

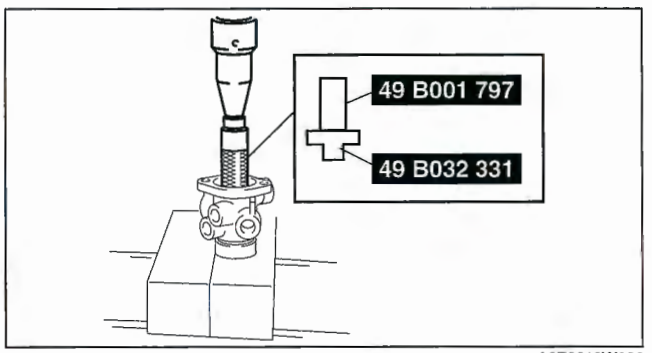

A6E0612W036

Upper Bearing Assembly Note

1. Apply grease to a new upper bearing.
2. Press in the upper bearing using the **SSTs**.

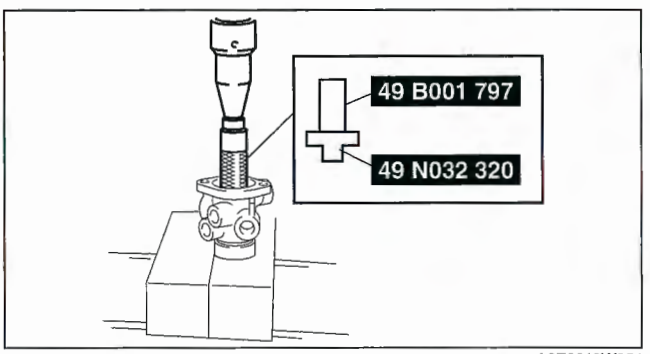

A6E0612W051

al Ring Assembly Note

1. Install a new seal ring to the valve part of the pinion shaft using the **SST**.
2. After installing it, seat it properly using the **SST**.
3. Install the snap ring.

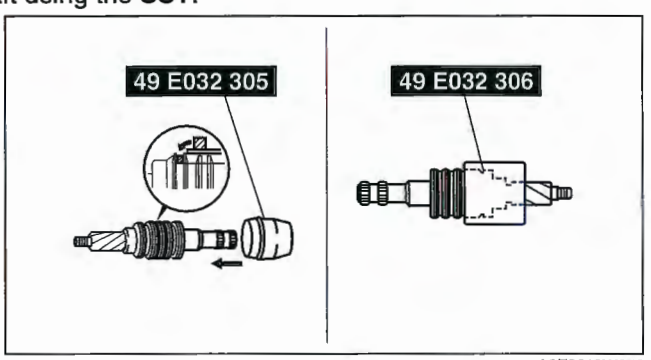

A6E0612W052

Adjusting Cover Assembly Note

1. Set the rack to the center position.
2. Tighten the adjusting cover to **4.9 N·m {50 kgf·cm, 36 in·lbf}** three times, then return it **25°** using the **SST**.
3. Apply sealant to the threads of the locknut.
4. Attach the locknut.

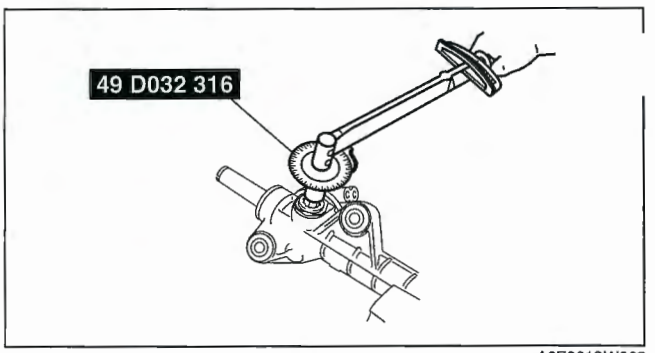

A6E0612W062

5. Measure the pinion torque using the **SST** and a pull scale.

   Pinion shaft rotation torque
   Center of rack ±90°: 0.7—1.1 N·m {7.2—11.2 kgf·cm, 6.2—9.7 in·lbf}
   [Pull scale reading 7—11 N {0.8—1.1 kgf, 1.6—2.4 lbf}]
   Except center of rack ±90°: Less than 1.6 N·m {16.3 kgf·cm, 11.8 in·lbf}
   [Pull scale reading Less than 16.7 N {1.7 kgf, 3.8 lbf}]

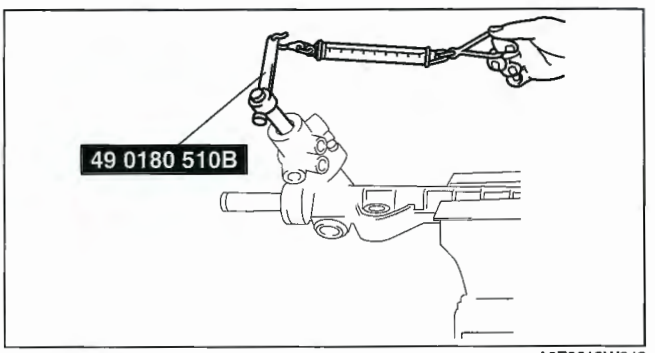

A6E0612W042

6. If not as specified, repeat steps 2 through 5.
7. Install the locknut using the **SST** (49 B032 320).

   Tightening torque
   40—49 N·m {4.1—4.9 kgf·m, 30—36 ft·lbf}

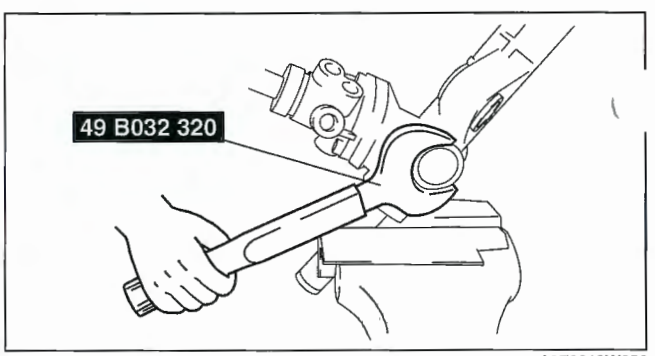

A6E0612W056

Hermetic sealing inspection

1. Connect the **SSTs** to the power cylinder section of the gear housing.
2. Apply **53.3 kPa {400 mmHg, 15.7 inHg}** vacuum with a vacuum pump and verify that it is held for at least **30 s**.
3. If the vacuum is not held, replace the oil seal.

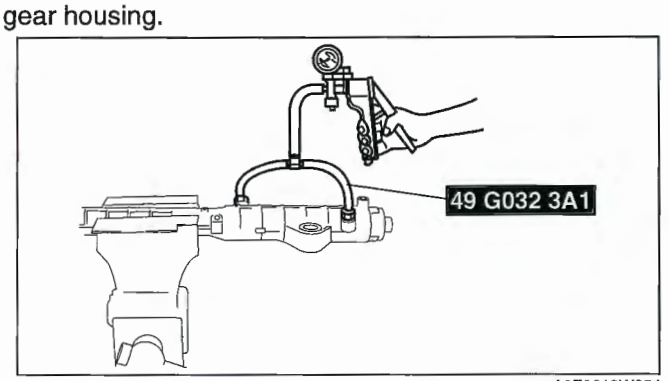

A6E0612W054

POWER STEERING OIL PUMP REMOVAL/INSTALLATION [L3, L3 WITH TC]

E6U061232650W01

1. Remove the drive belt. (See 01–10A–3 DRIVE BELT REPLACEMENT [L3].) (See 01–10B–3 DRIVE BELT REPLACEMENT [L3 WITH TC].)
   Remove in the order indicated in the table.
2. Install in the reverse order of removal.

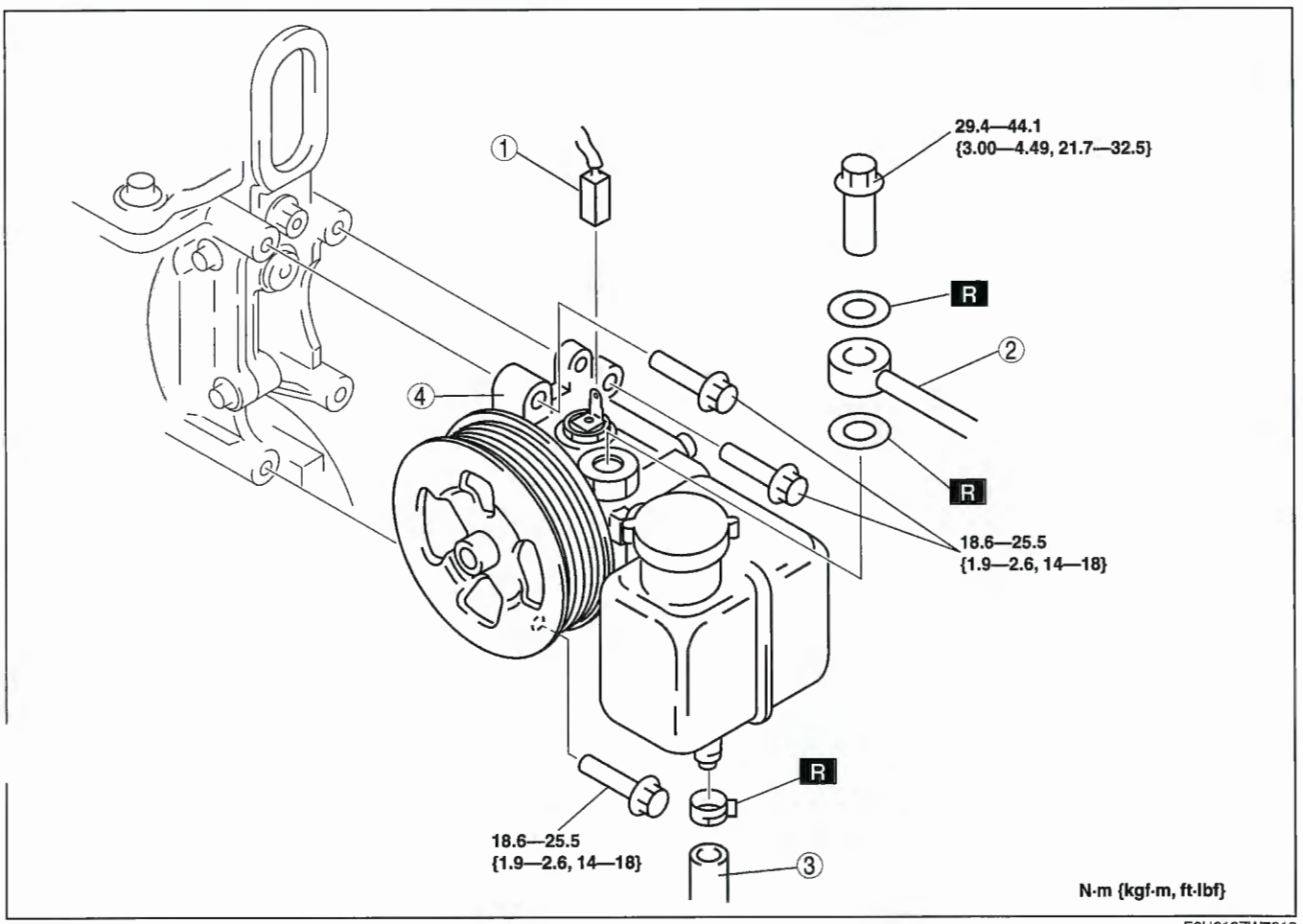

E6U612ZW7019

1	Pressure switch connector
2	Pressure pipe

3	Return hose
4	Power steering oil pump

POWER STEERING OIL PUMP REMOVAL/INSTALLATION [AJ]

E6U061232650W02

1. Remove the splash shield (right side).
2. Remove the under cover.
3. Remove the front drive belt. (See 01–10C–4 DRIVE BELT REPLACEMENT [AJ].)
4. Remove the oil level gauge pipe.
5. Remove the A/C compressor installation bolts.
6. Remove the exhaust manifold (LH). (See 01–15C–2 EXHAUST SYSTEM REMOVAL/INSTALLATION [AJ].)
7. Remove in the order indicated in the table.
8. Install in the reverse order of removal.

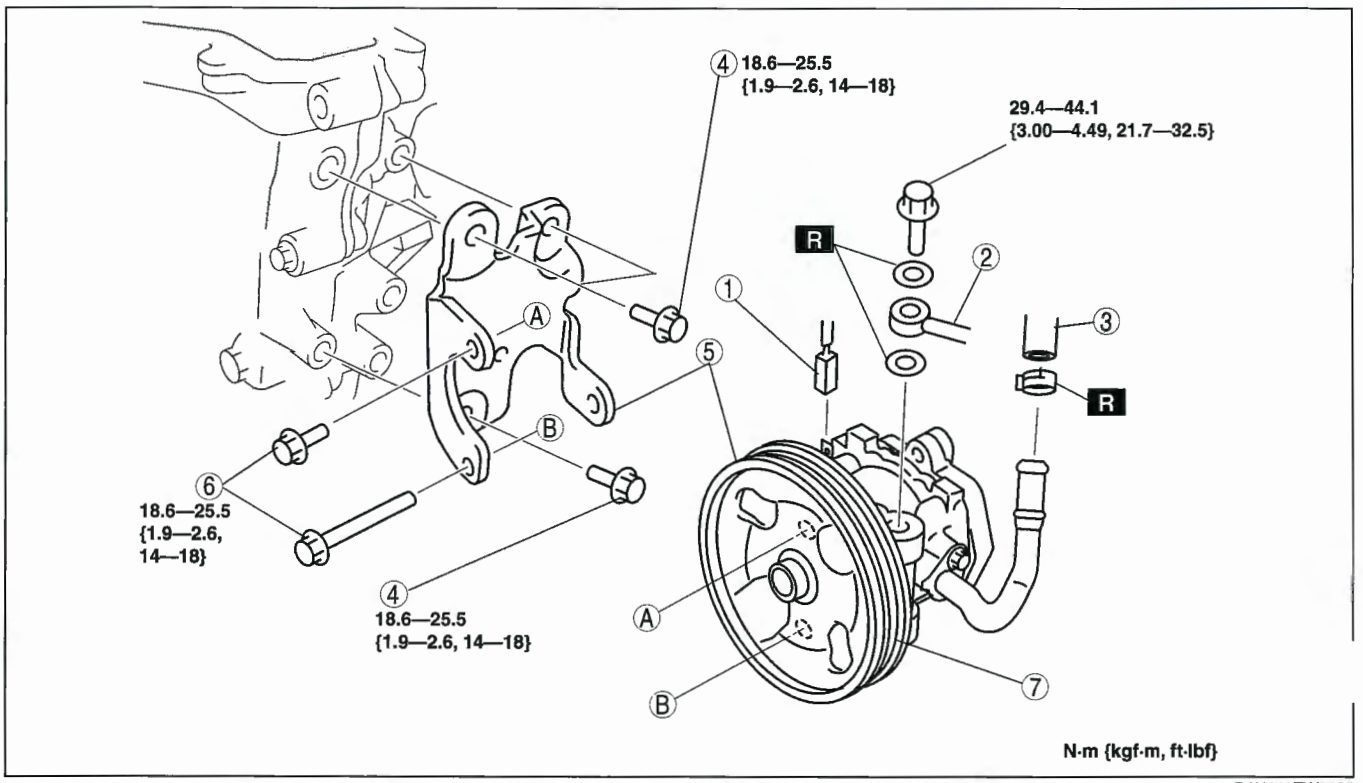

D6U612ZW7006

1	Pressure switch connector
2	Pressure pipe
3	Return hose
4	Bolts

5	Power steering oil pump bracket, Power steering oil pump
6	Bolts
7	Power steering oil pump

POWER STEERING OIL PUMP DISASSEMBLY/ASSEMBLY [L3, L3 WITH TC]

E6U061232650W03

Note

- The following procedure is for replacement of the O-ring and oil seal only. Replace the pump component if other repairs are necessary.

1. Disassemble in the order indicated in the table.
2. Assemble in the reverse order of disassembly.

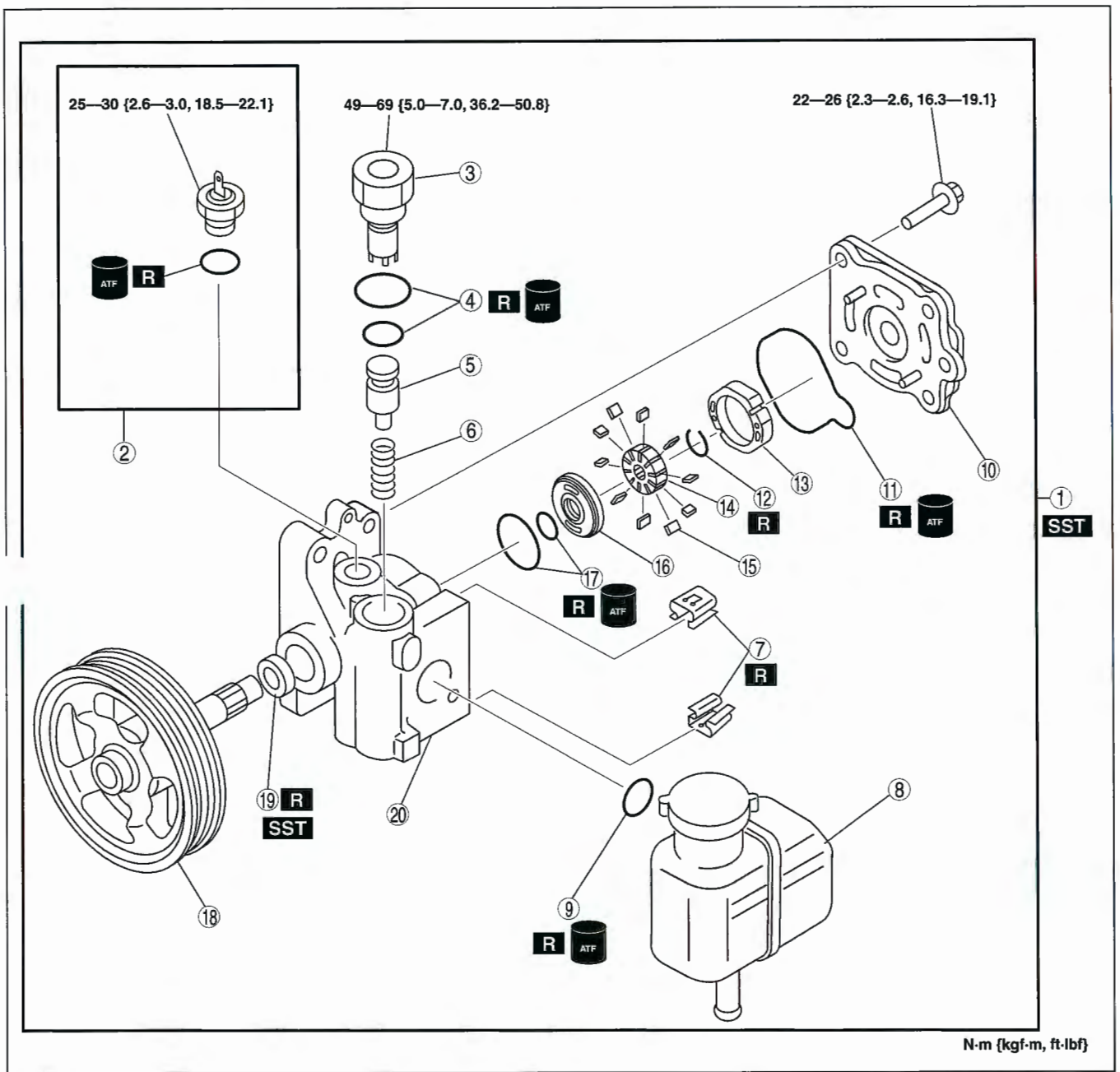

B6U0612W006

1	Power steering oil pump component (See 06–12–30 Power Steering Oil Pump Component Disassembly Note.)
2	Pressure switch component
3	Connector
4	O-rings
5	Control valve
6	Spring

7	Clip (See 06–12–30 Clip Disassembly Note.) (See 06–12–31 Clip Assembly Note.)
8	Fluid reservoir
9	O-ring
10	Rear pump body (See 06–12–31 Rear Pump Body Assembly Note.)
11	Gasket
12	Clip

13	Cam ring (See 06–12–31 Cam Ring Assembly Note.)
14	Rotor
15	Vane (See 06–12–31 Vane Assembly Note.)
16	Side plate
17	O-ring
18	Shaft component
19	Oil seal (See 06–12–31 Oil Seal Assembly Note.)
20	Front pump body

Power Steering Oil Pump Component Disassembly Note

1. Secure the power pressure oil pump using the **SST**.

Caution

- **Use the SST to prevent damage to the pump when securing it in a vise.**

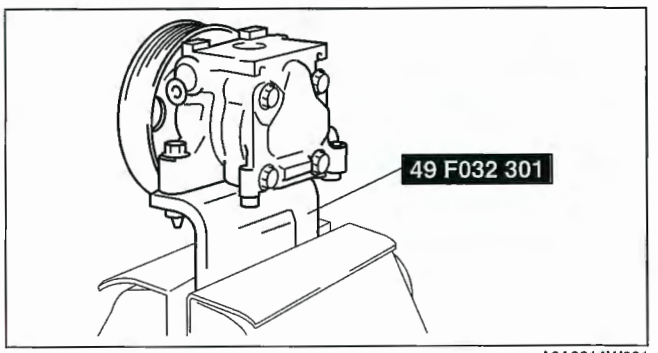

A6A6614W001

Clip Disassembly Note

1. Lift up the clip tab using a screwdriver (–).
2. Remove the clip pushing with a screwdriver (–) and a hammer as shown in the figure.

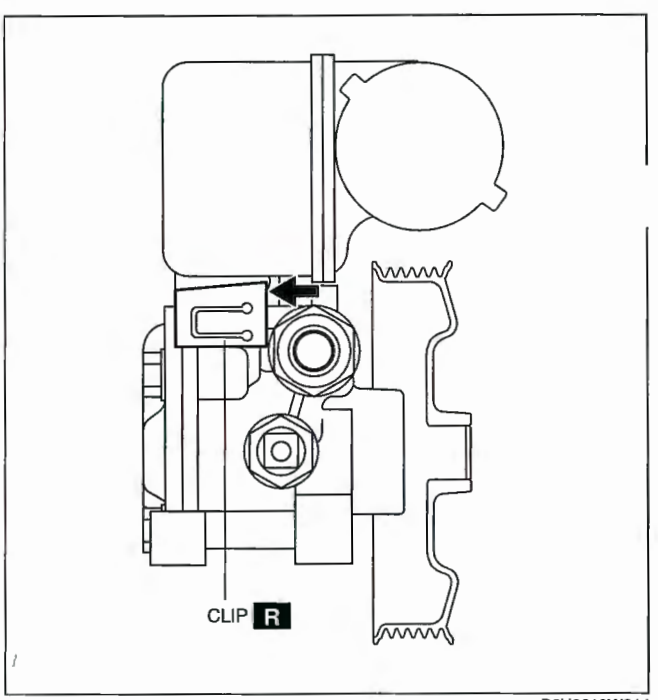

B6U0612W014

Clip Assembly Note

1. Push the clip slowly in the direction shown in the figure.
   Confirm that the clip tab is caught correctly.

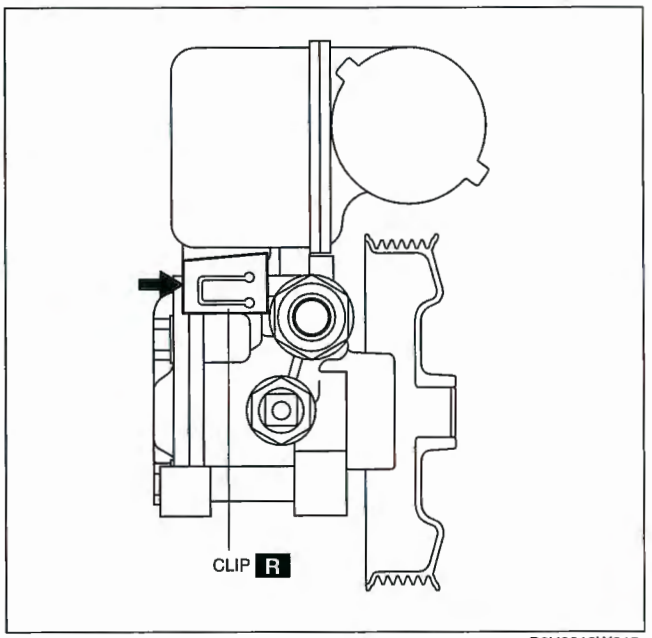

B6U0612W015

Oil Seal Assembly Note

1. Install the oil seal in the front pump body using the **SST** and plastic hammer.

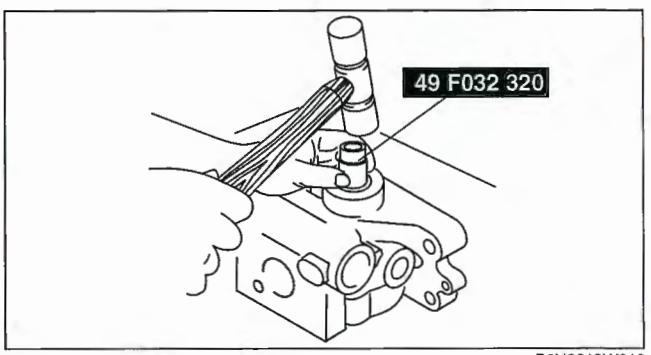

B6U0612W016

Vane Assembly Note

1. Place the vanes in the rotor with the rounded edges contacting the cam.

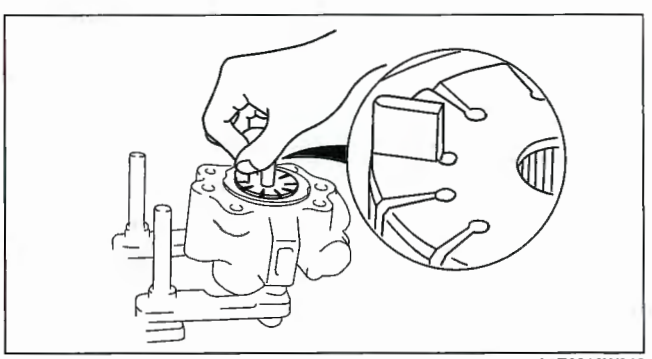

A6E6316W013

Cam Ring Assembly Note

1. Install the cam ring in the front pump body with the mark facing upward.

Rear Pump Body Assembly Note

1. After installing the rear body, manually turn the shaft to verify that it rotates smoothly.

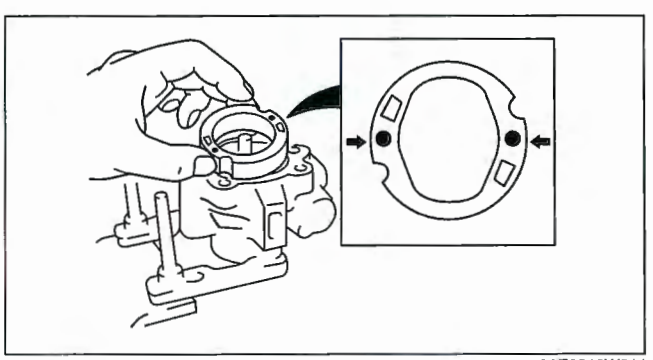

A6E6316W014

POWER STEERING OIL PUMP DISASSEMBLY/ASSEMBLY [AJ]

E6U061232650W04

Note

- The following procedure is for replacement of the O-ring and oil seal only. Replace the pump component other repairs are necessary.

1. Disassemble in the order indicated in the table.
2. Assemble in the reverse order of disassembly.

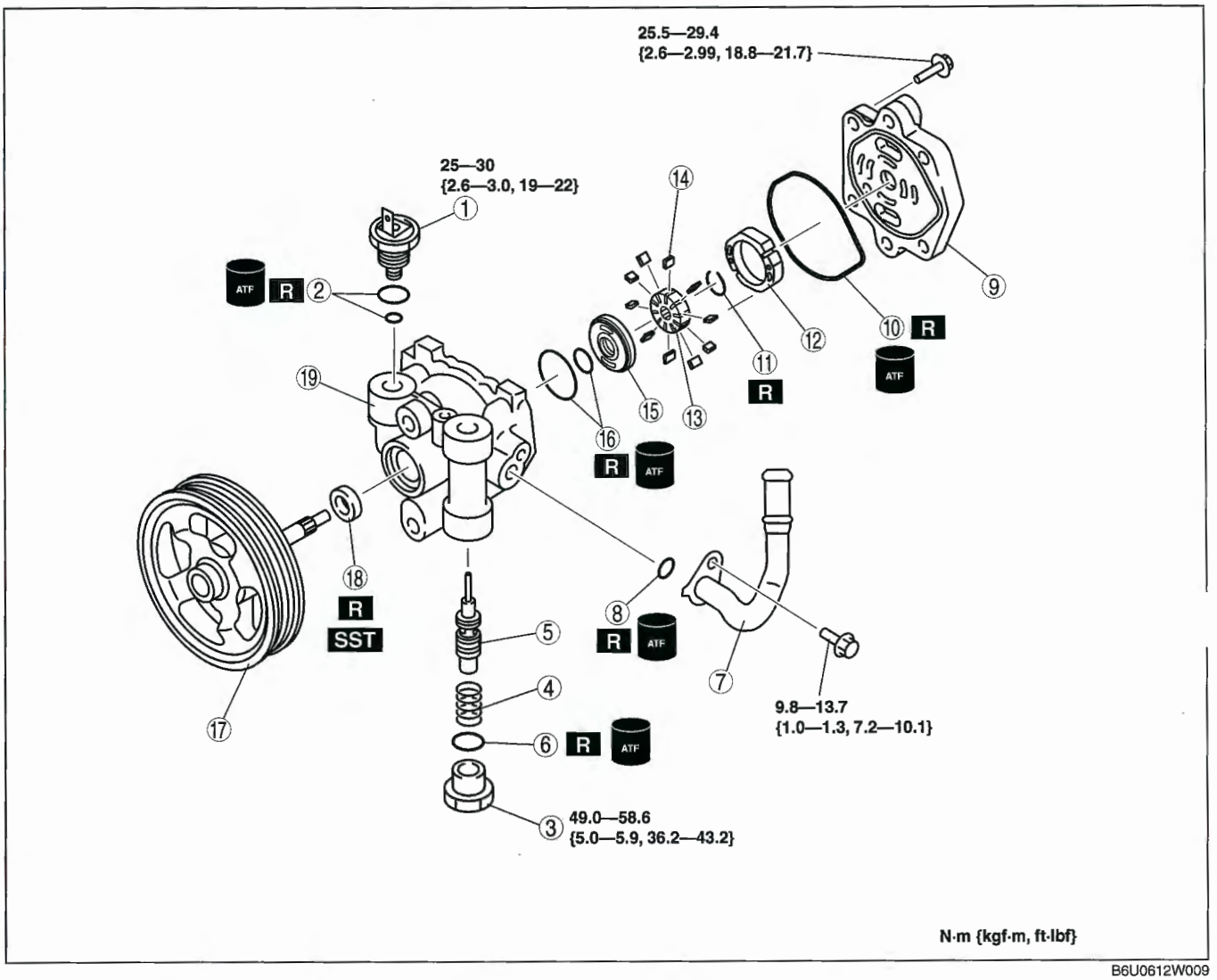

B6U0612W009

1	Pressure switch component
2	O-rings
3	Connector
4	Spring
5	Control valve
6	O-ring
7	Suction pipe
8	O-ring
9	Rear pump body (See 06–12–31 Rear Pump Body Assembly Note.)
10	Gasket

11	Clip
12	Cam ring (See 06–12–31 Cam Ring Assembly Note.)
13	Rotor
14	Vane (See 06–12–31 Vane Assembly Note.)
15	Side plate
16	O-rings
17	Shaft component
18	Oil seal (See 06–12–31 Oil Seal Assembly Note.)
19	Front pump body

06–50 TECHNICAL DATA

STEERING TECHNICAL DATA. 06–50–1

STEERING TECHNICAL DATA

E6U065000000W01

Item	Specification
Power steering fluid type	ATF M-III, M-V or equivalent (e.g. Dexron®III)
Power steering fluid capacity* (approx. quantity)	L3 MTX: 0.77 L {0.81 US qt, 0.68 Imp qt} L3 ATX: 0.84 L {0.89 US qt, 0.74 Imp qt} AJ: 1.02 L {1.08 US qt, 0.90 Imp qt} L3 WITH TC: 0.89 L {0.94 US qt, 0.78 Imp qt}
Oil pump fluid pressure	L3: 10.80—11.29 MPa {110.2—115.2 kgf/cm^2, 1567—1637 psi} AJ: 11.31—11.80 MPa {115.4—120.3 kgf/cm^2, 1640—1711 psi} L3 WITH TC: 11.30—11.70 MPa {116.0—119.0 kgf/cm^2, 1639—1696 psi}
Gear housing fluid pressure	L3: 10.80—11.29 MPa {110.2—115.2 kgf/cm^2, 1567—1637 psi} AJ: 11.31—11.80 MPa {115.4—120.3 kgf/cm^2, 1640—1711 psi} L3 WITH TC: 11.30—11.70 MPa {116.0—119.0 kgf/cm^2, 1639—1696 psi}
Steering wheel play	0—30 mm {0—1.18 in}
Steering wheel effort (reference value)	7.8 N·m {80 kgf·cm, 58 in·lbf} max.
Steering shaft length	211.6 mm {8.3 in}
Steering rack runout	Large diameter portion: 0.15 mm {0.006 in} max. Small diameter portion: 0.20 mm {0.008 in} max.
Tie-rod end rotational torque	0.6—2.0 N·m {6.2—20.3 kgf·cm, 5.4—17.7 in·lbf} [Pull scale reading 6.0—20.0 N {0.62—2.03 kgf, 1.4—4.4 lbf}]
rod swing torque	0.4—4.0 N·m {4.1—40.7 kgf·cm, 3.6—35.4 in·lbf} [Pull scale reading 4.0—40.0 N {0.41—4.07 kgf, 0.9—8.9 lbf}]
Pinion shaft rotation torque	Center of rack ±90°: 0.7—1.1 N·m {7.2—11.2 kgf·cm, 6.2—9.7 in·lbf} Except center of rack ±90°: Less than 1.6 N·m {16.3 kgf·cm, 11.8 in·lbf}

* : When reservoir tank is at maximum volume

06–60 SERVICE TOOLS

STEERING SST..... 06–60–1

STEERING SST

E6U066000000W01

49 1232 670B Power steering gauge set 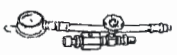	49 H002 671 Adapter 	49 G032 3A4A Power steering gauge adapter set 
49 T028 3A0 Ball joint puller set 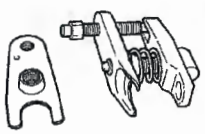	49 B032 320 Wrench 	49 B032 317 Bearing and oil seal remover 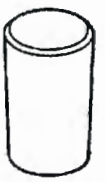
49 F032 303 Handle 	49 B032 323 Rod seal remover body 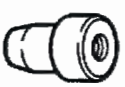	49 N032 319A Support plate 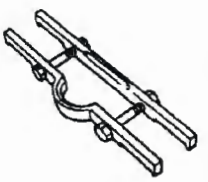
T028 301 Dust boot installer 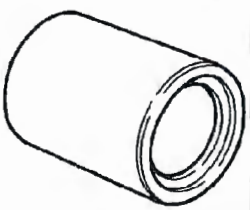	49 0180 510B Preload measuring attachment 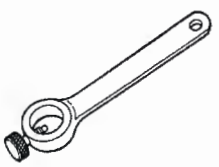	49 B032 324 Rod seal protector body 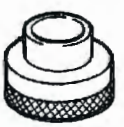
49 B032 325 Rod seal guide 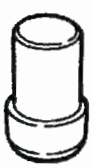	49 B001 797 Handle 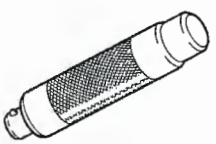	49 B032 326 Outer box protector 
49 B032 331 Oil seal installer 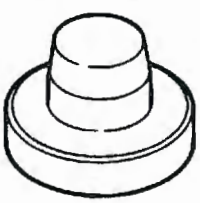	49 N032 320 Bearing installer 	49 E032 305 Slipper seal protector 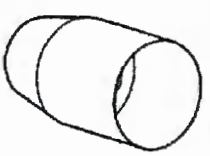
49 E032 306 Slipper seal former 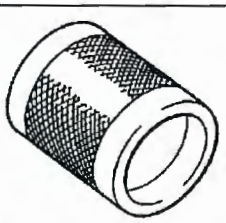	49 D032 316 Protractor 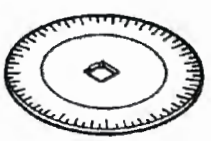	49 G032 3A1 Joint host set 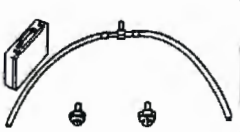

SERVICE TOOLS

49 F032 301 Power steering pump hanger 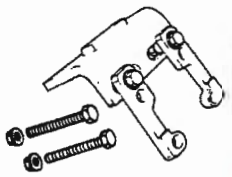	49 F032 320 Installer A (Part of 49 F032 3A2) 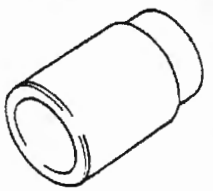	—

HEATER, VENTILATION & AIR CONDITIONING (HVAC)

07 SECTION

ON-BOARD DIAGNOSTIC 07-02
SYMPTOM TROUBLESHOOTING 07-03
REFRIGERANT SYSTEM 07-10
BASIC SYSTEM 07-11
CONTROL SYSTEM 07-40
TECHNICAL DATA 07-50

07–02 ON-BOARD DIAGNOSTIC

HVAC SYSTEM WIRING DIAGRAM [L3, AJ] 07–02–2
HVAC SYSTEM WIRING DIAGRAM [L3 WITH TC] 07–02–3
DIAGNOSTIC TROUBLE CODE NUMBER INSPECTION [L3, AJ] 07–02–4
- Present Failure Indication Mode 07–02–4
- Past Failure Indication Mode 07–02–4
- Erasing Past Failure Memory 07–02–4
- DTC Table 07–02–5
- Output Device Operation Check Mode 07–02–6

DIAGNOSTIC TROUBLE CODE NUMBER INSPECTION [L3 WITH TC] 07–02–8
- Present Failure Indication Mode 07–02–8
- Past Failure Indication Mode 07–02–8
- Erasing Past Failure Memory 07–02–8
- DTC Table 07–02–9
- Output Device Operation Check Mode 07–02–10

DTC 02 [L3, AJ] 07–02–12
DTC 02 [L3 WITH TC] 07–02–12
DTC 03 07–02–13
DTC 06 [L3, AJ] 07–02–14
DTC 06 [L3 WITH TC] 07–02–14
DTC 07 [L3, AJ] 07–02–15
DTC 07 [L3 WITH TC] 07–02–16
DTC 10 [L3, AJ] 07–02–16
DTC 10 [L3 WITH TC] 07–02–17
DTC 11 [L3, AJ] 07–02–18
DTC 11 [L3 WITH TC] 07–02–18
DTC 12 [L3, AJ] 07–02–19
DTC 12 [L3 WITH TC] 07–02–20
DTC 13 [L3, AJ] 07–02–20
DTC 13 [L3 WITH TC] 07–02–21
DTC 14 [L3, AJ] 07–02–22
DTC 14 [L3 WITH TC] 07–02–22
DTC 15 [L3, AJ] 07–02–23
DTC 15 [L3 WITH TC] 07–02–23
DTC 18 [L3 WITH TC] 07–02–24
DTC 19 [L3 WITH TC] 07–02–25
DTC 21 [L3, AJ] 07–02–26
DTC 21 [L3 WITH TC] 07–02–26
DTC 22 [L3, AJ] 07–02–27
DTC 22 [L3 WITH TC] 07–02–28
DTC 58 [L3 WITH TC] 07–02–28
DTC 59 07–02–29
DTC 02, 18, 21 (WHEN TWO OR MORE DTCS ARE INDICATED AT THE SAME TIME) [L3 WITH TC] 07–02–30
DTC 06, 10, 12, 14, 21 (WHEN TWO OR MORE DTCS ARE INDICATED AT THE SAME TIME) 07–02–31
DTC 06, 10, 12, 14, 18, 21 (WHEN TWO OR MORE DTCS ARE INDICATED AT THE SAME TIME) [L3 WITH TC] 07–02–31
DTC 07, 11, 13, 15, 22 (WHEN TWO OR MORE DTCS ARE INDICATED AT THE SAME TIME) 07–02–32
DTC 07, 11, 12, 15, 19, 22 (WHEN TWO OR MORE DTCS ARE INDICATED AT THE SAME TIME) [L3 WITH TC] 07–02–32
DTC 19, 22 (WHEN TWO OR MORE DTCS INDICATED AT THE SAME TIME) [L3 WITH TC] 07–02–33

HVAC SYSTEM WIRING DIAGRAM [L3, AJ]

E6U070200000W17

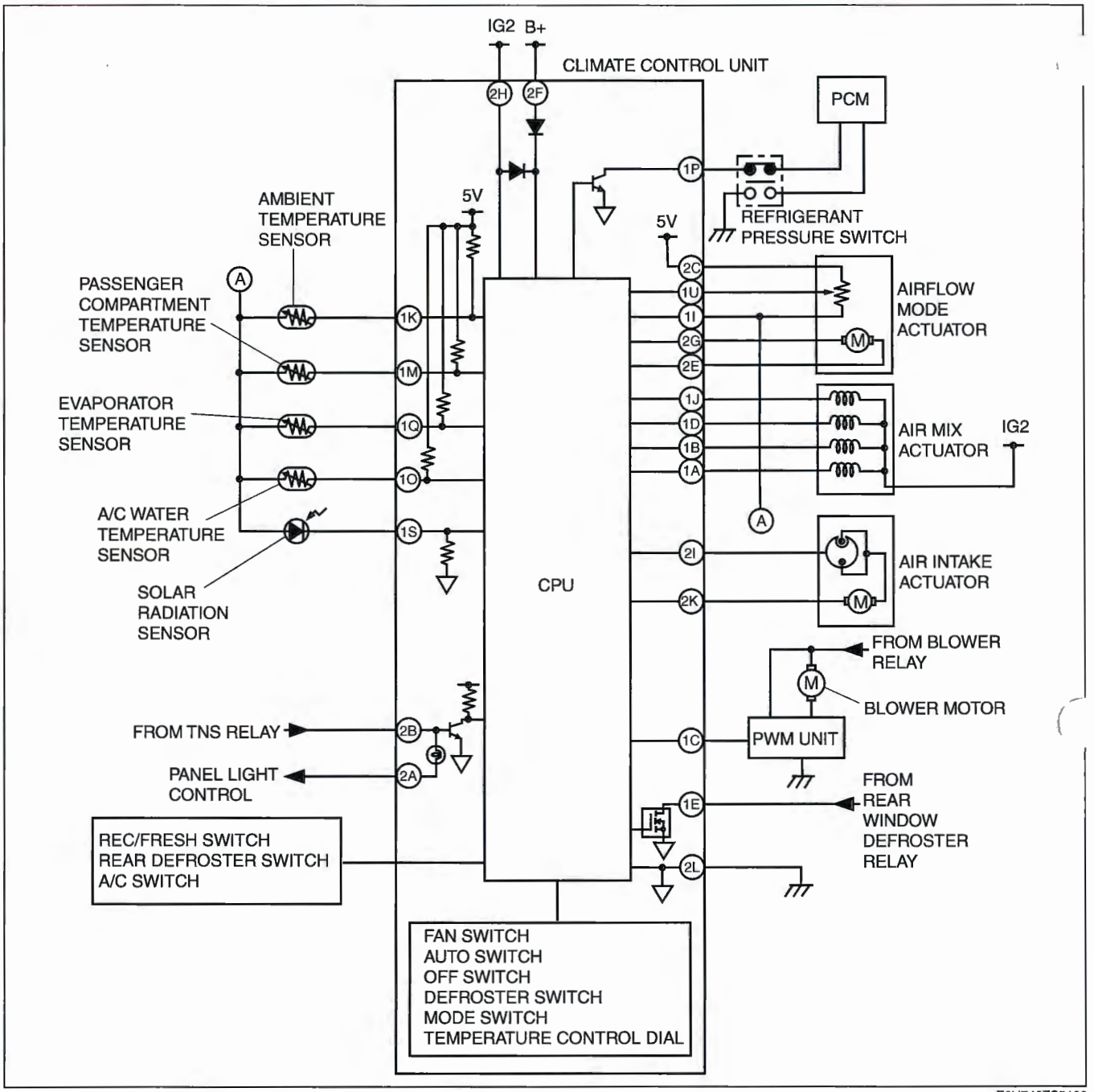

E6U740ZS5102

HVAC SYSTEM WIRING DIAGRAM [L3 WITH TC]

E6U070200000W18

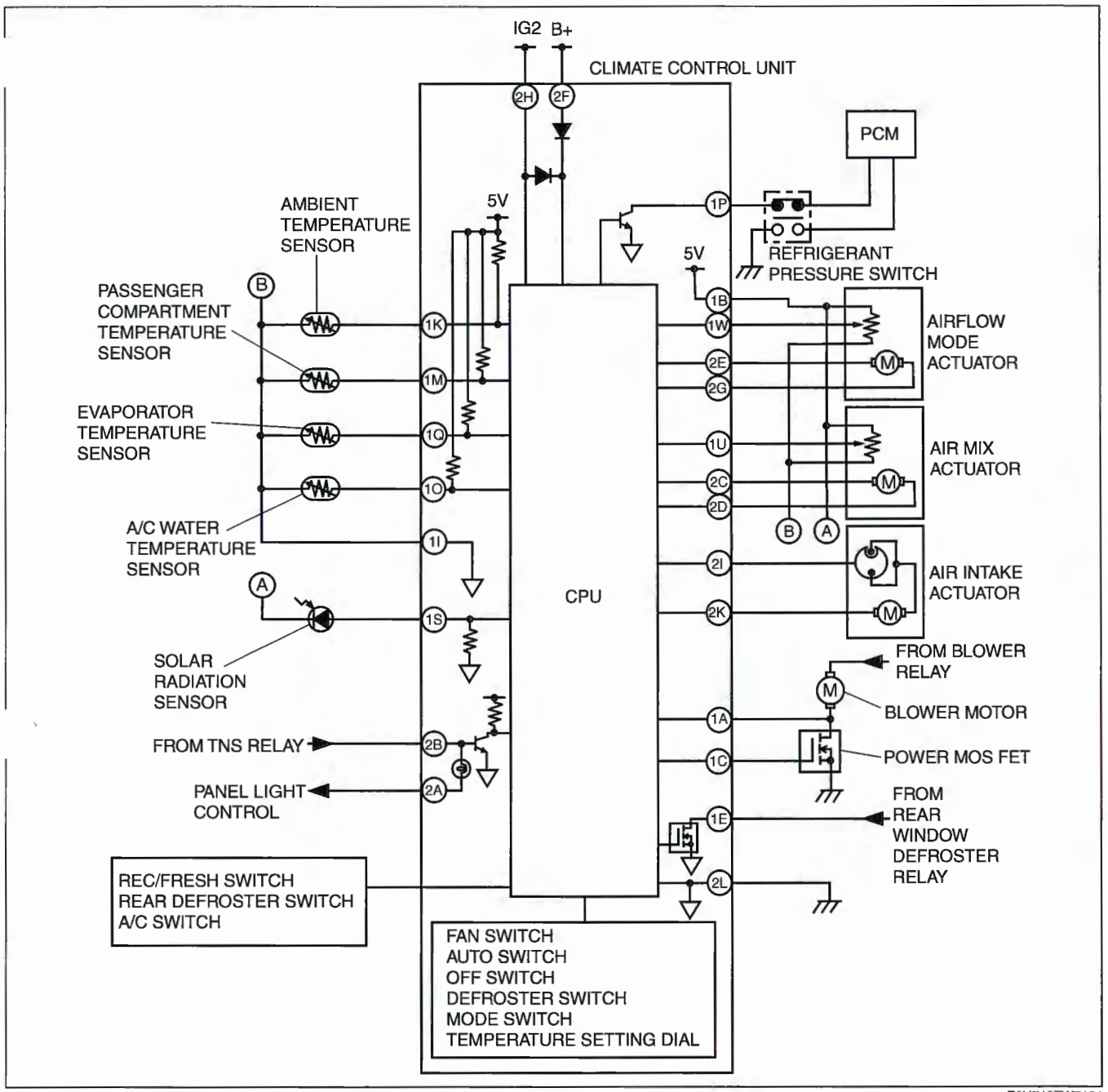

E6U740ZW7101

07–02

DIAGNOSTIC TROUBLE CODE NUMBER INSPECTION [L3, AJ]

E6U070200000W01

1. Remove the glove compartment.
2. Short the DLC to the GND terminal using a jumper wire.
3. Shine a **60 W** incandescent light from a height of **approx. 100 mm {3.9 in}** onto the solar radiation sensor.

Note
- If incandescent light is not shone on the solar radiation sensor, the climate control unit determines a malfunction and indicates a diagnostic trouble code "02".

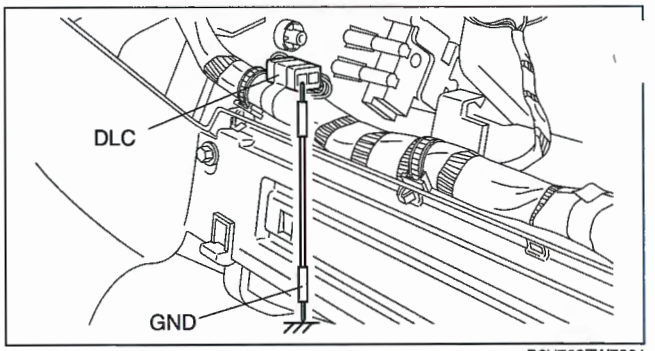

D6U702ZW7001

4. Turn the ignition switch to ON position.
5. Read DTCs from the flashing of the rear defroster indicator light on the climate control unit. Carry out DTC inspection. (Present and past failure indication modes)
   - When the system is normal, the rear defroster indicator light does not flash.
   - If any of the diagnostic trouble codes are indicated, carry out troubleshooting according to the code.
6. After completion of repairs, erase all diagnostic trouble code(s) from memory. (See 07–02–4 Erasing Past Failure Memory.)
7. Remove the jumper wire.

Present Failure Indication Mode

- The on-board diagnostic function displays the present failure indication mode directly after start up. In present failure indication mode, present failures in the control system circuits (open, short circuits) are detected, and the flashing of the rear defroster indicator light on the climate control unit indicates the DTCs.
  — If a diagnostic trouble code is indicated, refer to the diagnostic trouble code table below and inspect the appropriate system.

Past Failure Indication Mode

- While in present failure indication mode, press the A/C switch to change to the past failure indication mode. In past failure indication mode, past failures (intermittent problems) in the input sensor circuits (open, short circuits) are stored, and the flashing of the rear defroster indicator light on the climate control unit indicates the DTCs.
  — If a diagnostic trouble code is indicated, refer to the following diagnostic trouble code table and inspect the appropriate system. (Disconnections and short circuits are stored in the same system even if either occurs only once.)
  — If the A/C switch is pressed again while in past failure indication mode, the on-board diagnostic function will return to present failure indication mode.

Erasing Past Failure Memory

- When DTCs are displayed in the past failure indication mode, they remain in the memory after the failed systems are corrected. Consequently, the next time the past failure indication mode is used, the same past failure DTCs will be indicated by the flashing of the rear defroster indicator light on the climate control unit. Therefore, erase the past failure memory after correcting all failed systems. To erase the past failure memory, press the AUTO switch and REC/FRESH switch on the climate control unit at the same time while in past failure indication mode. If erased, the rear defroster indicator light flashes once.

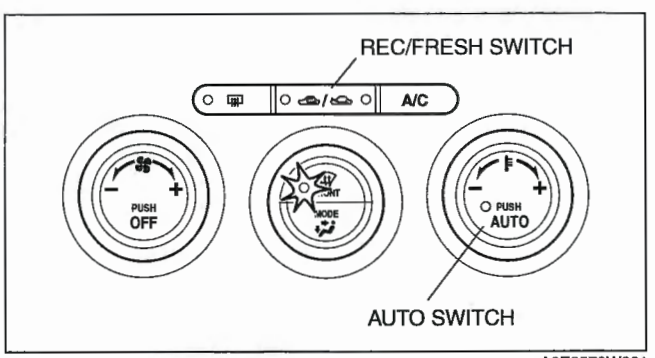

A6E8570W001

DTC Table

No.	Indicator pattern	Diagnosed circuit
2		Solar radiation sensor (present)
03		Solar radiation sensor (past)
06		Passenger compartment temperature sensor (present)
07		Passenger compartment temperature sensor (past)
10		Evaporator temperature sensor (present)
11		Evaporator temperature sensor (past)
12		Ambient temperature sensor (present)
13		Ambient temperature sensor (past)
14		Water temperature sensor (present)
15		Water temperature sensor (past)
21		Airflow mode actuator [potentiometer] (present)
22		Airflow mode actuator [potentiometer] (past)
59	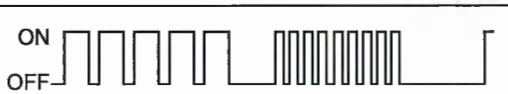	Airflow mode actuator [motor lock] (past)

Output Device Operation Check Mode
Inspection

1. Warm up the engine.
2. Turn the ignition switch to LOCK position.
3. Start up the on-board diagnostic function (present failure indication mode).
4. Press the AUTO switch.
5. Verify that all the indicator lights of the climate control unit and center panel (climate control part) illuminate for **4 s**.

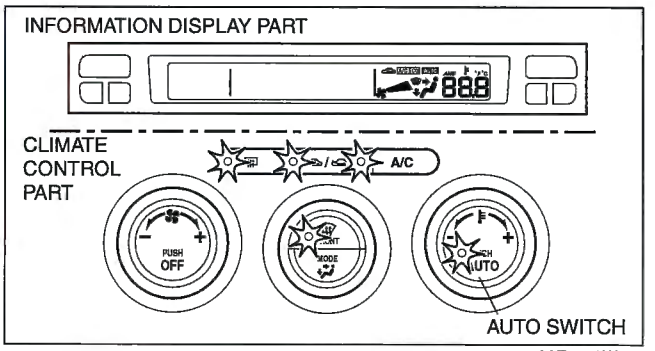

A6E8570W002

6. Verify the operation of each output device when changing steps by pressing the REC/FRESH switch, and referring to the output device operation check chart.
   - If not as specified, inspect the malfunctioning system.

   Note
   - If the AUTO switch is pressed again, the on-board diagnostic function will return to present failure indication mode.

7. Turn the ignition switch to LOCK position to end the on-board diagnostic function.

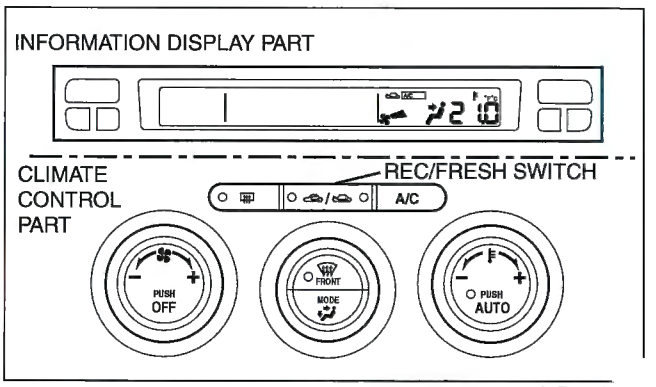

A6E8570V

Output device operation check table

Step	Operating device	Operating conditions	Monitor*	Other device conditions
	Blower motor speed	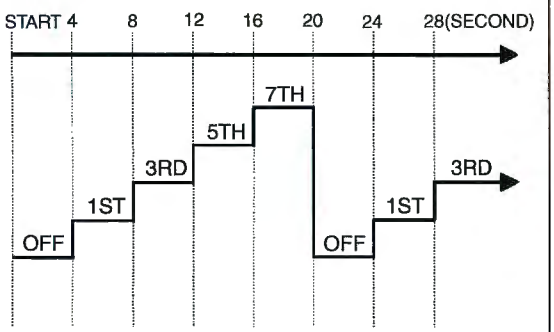	1	• Air mix actuator operation — 50% • Airflow mode actuator operation — VENT • Air intake actuator operation — FRESH • A/C compressor operation — ON
2	Air mix actuator operation	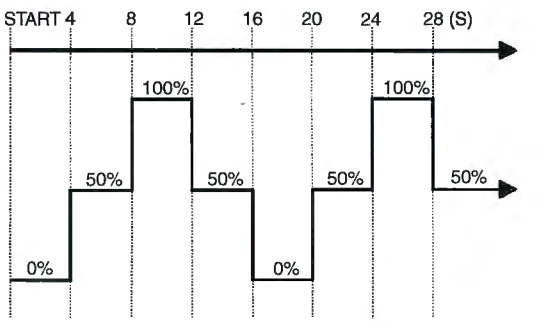	20.0 20.5 21.0 20.5	• Blower motor speed — 2nd • Airflow mode actuator operation — VENT • Air intake actuator operation — FRESH • A/C compressor operation — ON
3	Airflow mode actuator operation	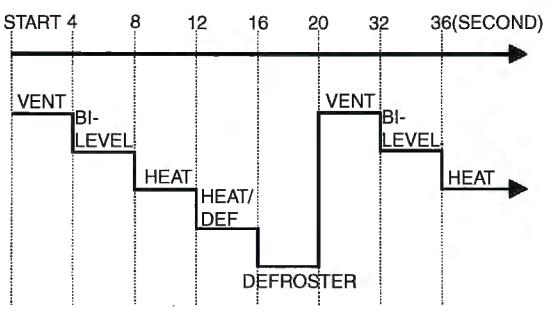	3	• Blower motor speed — 2nd • Air mix actuator operation — 50% • Air intake actuator operation — FRESH • A/C compressor operation — ON
4	Air intake actuator operation	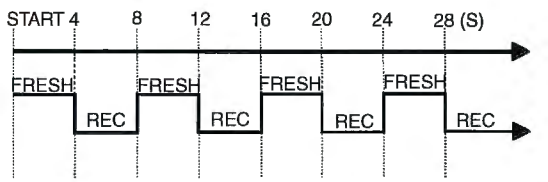	4	• Blower motor speed — 2nd • Air mix actuator operation — 0% • Airflow mode actuator operation — VENT
	A/C compressor operation	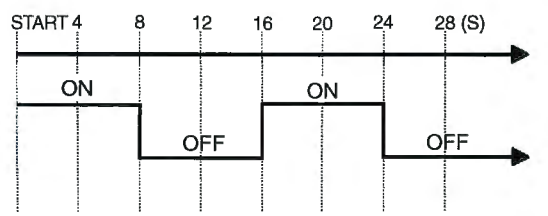		

* : Shown on the information display according to step.

DIAGNOSTIC TROUBLE CODE NUMBER INSPECTION [L3 WITH TC]

E6U070200000W19

1. Remove the glove compartment.
2. Short the A/C check connector to the GND terminal using a jumper wire.
3. Shine a **60 W** incandescent light from a height of **approx. 100 mm {3.9 in}** onto the solar radiation sensor.

Note
- If incandescent light is not shone on the solar radiation sensor, the climate control unit determines a malfunction and indicates a diagnostic trouble code "02".

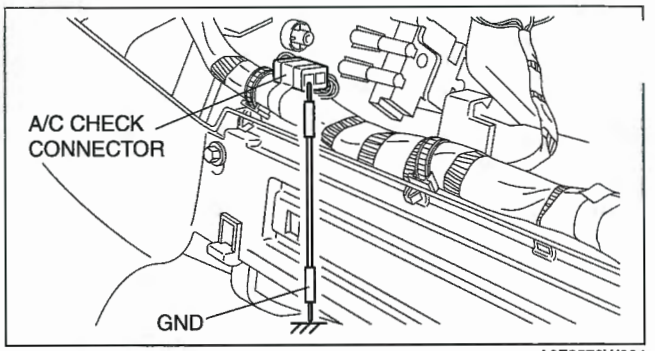

A6E8570W004

4. Turn the ignition switch to ON position.
5. Read DTCs from the flashing of the defroster indicator light on the climate control unit. Carry out DTC inspection. (Present and past failure indication modes)
   - When the system is normal, the defroster indicator light does not flash.
   - If any of the diagnostic trouble codes are indicated, carry out troubleshooting according to the code.
6. After completion of repairs, erase all diagnostic trouble code(s) from memory. (See 07–02–8 Erasing Past Failure Memory.)
7. Remove the jumper wire.

Present Failure Indication Mode

- The on-board diagnostic function displays the present failure indication mode directly after start up. In present failure indication mode, present failures in the control system circuits (open, short circuits) are detected, and the flashing of the defroster indicator light on the climate control unit indicates the DTCs.
  — If a diagnostic trouble code is indicated, refer to the diagnostic trouble code table below and inspect the appropriate system.

Past Failure Indication Mode

- While in present failure indication mode, press the A/C switch to change to the past failure indication mode. ' past failure indication mode, past failures (intermittent problems) in the input sensor circuits (open, short circuits) are stored, and the flashing of the defroster indicator light on the climate control unit indicates the DTCs.
  — If a diagnostic trouble code is indicated, refer to the following DTC table and inspect the appropriate system. (Disconnections and short circuits are stored in the same system even if either occurs only once.)
  — If the A/C switch is pressed again while in past failure indication mode, the on-board diagnostic function will return to present failure indication mode.

Erasing Past Failure Memory

- When DTCs are displayed in the past failure indication mode, they remain in the memory after the failed systems are corrected. Consequently, the next time the past failure indication mode is used, the same past failure DTCs will be indicated by the flashing of the defroster indicator light on the climate control unit. Therefore, erase the past failure memory after correcting all failed systems. To erase the past failure memory, press the AUTO switch and REC/FRESH switch on the climate control unit at the same time while in past failure indication mode. If erased, the defroster indicator light flashes once.

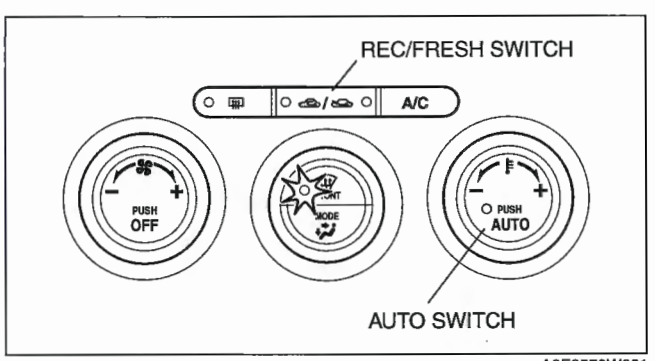

A6E8570W001

DTC Table

No.	Indicator pattern	Diagnosed circuit
2		Solar radiation sensor (present)
06		Passenger compartment temperature sensor (present)
07		Passenger compartment temperature sensor (past)
10		Evaporator temperature sensor (present)
11		Evaporator temperature sensor (past)
12		Ambient temperature sensor (present)
13		Ambient temperature sensor (past)
4		A/C water temperature sensor (present)
15		A/C water temperature sensor (past)
18		Air mix actuator [potentiometer] (present)
19		Air mix actuator [potentiometer] (past)
21		Airflow mode actuator [potentiometer] (present)
22		Airflow mode actuator [potentiometer] (past)
58		Air mix actuator [motor lock] (past)
,9		Airflow mode actuator [motor lock] (past)

Output Device Operation Check Mode
Inspection

1. Warm up the engine.
2. Turn the ignition switch to LOCK position.
3. Start up the on-board diagnostic function (present failure indication mode).
4. Press the AUTO switch.
5. Verify that all the indicator lights of the climate control unit and center panel (climate control part) illuminate for **4 s**.
6. Verify the operation of each output device when changing steps by pressing the REC/FRESH switch, and referring to the output device operation check chart.
   - If there is any malfunction, inspect the malfunctioning system.

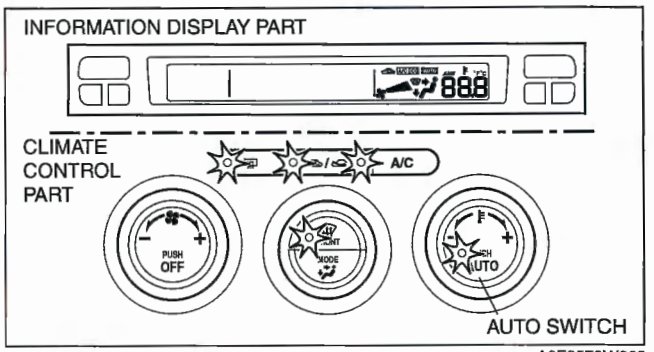

A6E8570W002

Note

- If the AUTO switch is pressed again, the on-board diagnostic function will return to present failure indication mode.

7. Turn the ignition switch to LOCK position to end the on-board diagnostic function.

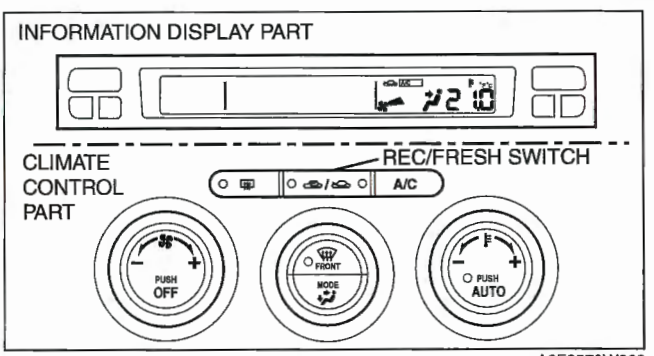

A6E8570W003

Output device operation check table

Step	Operating device	Operating conditions	Monitor*	Other device conditions
1	Blower motor speed	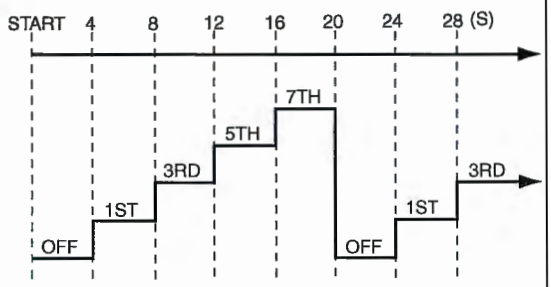	1	• Air mix actuator operation — 50% • Airflow mode actuator operation — VENT • Air intake actuator operation — FRESH • A/C compressor operation — ON
2	Air mix actuator operation	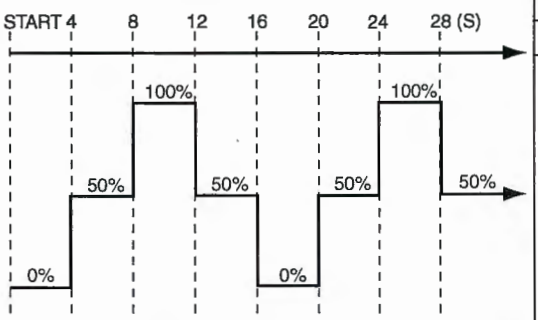	21.0 20.5 20.0	• Blower motor speed — 3rd • Airflow mode actuator operation — VENT • Air intake actuator operation — FRESH • A/C compressor operation — ON
3	Airflow mode actuator operation	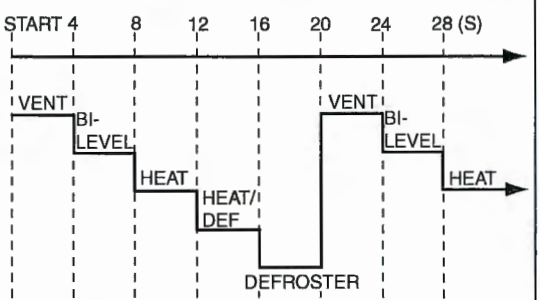	3	• Blower motor speed — 3rd • Air mix actuator operation — 50% • Air intake actuator operation — FRESH • A/C compressor operation — ON
4	Air intake actuator operation	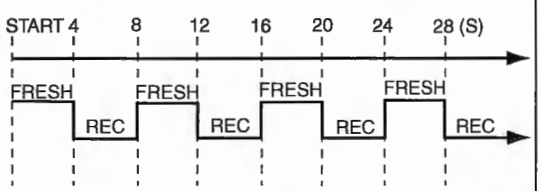	4	• Blower motor speed — 3rd • Air mix actuator operation — 0% • Airflow mode actuator operation — VENT
	A/C compressor operation	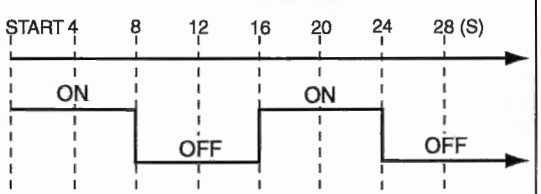		

* : Shown on the information display according to step.

DTC 02 [L3, AJ]

E6U070200000W02

DTC 02	Solar radiation sensor system inspection
POSSIBLE CAUSE	• Solar radiation sensor malfunction • Climate control unit malfunction • Open or short circuit between solar radiation sensor and climate control unit

Diagnostic Procedure

STEP	INSPECTION		ACTION
1	• Inspect solar radiation sensor. • Is it okay?	Yes	Go to the next step.
		No	Replace solar radiation sensor. (See 07–40–21 SOLAR RADIATION SENSOR REMOVAL/INSTALLATION.)
2	• Disconnect climate control unit connector (24-pin) and solar radiation sensor connector. • Is there continuity between the following climate control unit terminals and solar radiation sensor terminal? — 1S—B — 1I—A	Yes	Go to the next step.
		No	Repair wiring harness.
3	• Is there a short circuit to ground between climate control unit terminal 1S and solar radiation sensor terminal B?	Yes	Repair wiring harness.
		No	Replace climate control unit. (See 07–40–30 CLIMATE CONTROL UNIT REMOVAL [L3, AJ].)

CLIMATE CONTROL UNIT CONNECTOR

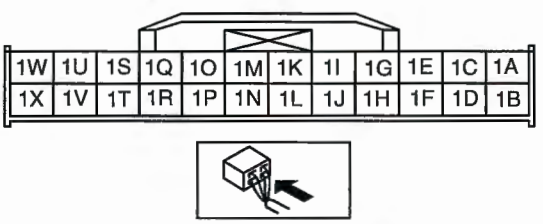

SOLAR RADIATION SENSOR CONNECTOR

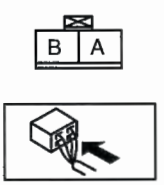

DTC 02 [L3 WITH TC]

E6U070200000W22

DTC 02	Solar radiation sensor system inspection
POSSIBLE CAUSE	• Solar radiation sensor malfunction • Climate control unit malfunction • Open or short circuit between solar radiation sensor and climate control unit

Diagnostic Procedure

STEP	INSPECTION		ACTION
1	• Inspect solar radiation sensor. • Is it normal?	Yes	Go to the next step.
		No	Replace solar radiation sensor.
2	• Disconnect climate control unit connector (24-pin) and solar radiation sensor connector. • Is there continuity between following terminals of climate control unit connector (24-pin) and terminal solar radiation sensor connector? — 1S—B — 1B—A	Yes	Go to the next step.
		No	Repair wiring harness.
3	• Is there short circuit to ground between terminal 1S of climate control unit connector (24-pin) and terminal B of solar radiation sensor connector?	Yes	Repair wiring harness.
		No	Replace climate control unit.

CLIMATE CONTROL UNIT CONNECTOR

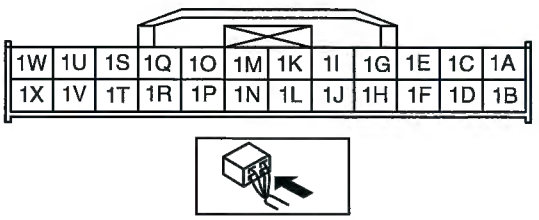

SOLAR RADIATION SENSOR CONNECTOR



DTC 03

E6U070200000W03

DTC 03	Solar radiation sensor system inspection
POSSIBLE CAUSE	• Solar radiation sensor malfunction • Climate control unit malfunction • Short circuit between solar radiation sensor and climate control unit

Diagnostic Procedure

STEP	INSPECTION		ACTION
1	• Inspect solar radiation sensor. • Is it okay?	Yes	Go to the next step.
		No	Replace solar radiation sensor. (See 07–40–21 SOLAR RADIATION SENSOR REMOVAL/INSTALLATION.)
2	• Is there a short circuit to ground between climate control unit terminal 1S and solar radiation sensor terminal B?	Yes	Repair wiring harness.
		No	This system is normal at present. (Erase the past failure from memory.)

CLIMATE CONTROL UNIT CONNECTOR

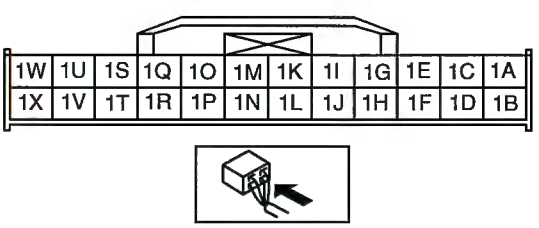

SOLAR RADIATION SENSOR CONNECTOR



DTC 06 [L3, AJ]

E6U070200000W04

DTC 06	Passenger compartment temperature sensor system inspection
POSSIBLE CAUSE	• Passenger compartment temperature sensor malfunction • Climate control unit malfunction • Open or short circuit between passenger compartment temperature sensor and climate control unit

Diagnostic Procedure

STEP	INSPECTION		ACTION
1	• Is resistance between climate control unit terminals 1I and 1M as indicated below? — **76 ohms—124 kilohms**	Yes	Replace climate control unit. (See 07–40–30 CLIMATE CONTROL UNIT REMOVAL [L3, AJ].)
		No	Go to the next step.
2	• Inspect passenger compartment temperature sensor. • Is it okay?	Yes	Repair wiring harness.
		No	Replace passenger compartment temperature sensor. (See 07–40–23 PASSENGER COMPARTMENT TEMPERATURE SENSOR REMOVAL/INSTALLATION [L3, AJ].)

CLIMATE CONTROL UNIT CONNECTOR

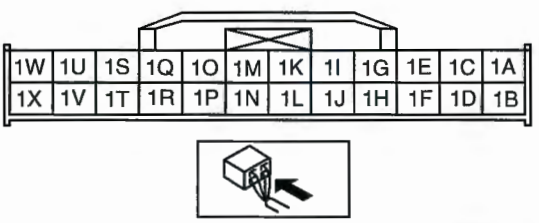

DTC 06 [L3 WITH TC]

E6U070200000W20

DTC 06	Passenger compartment temperature sensor system inspection
POSSIBLE CAUSE	• Passenger compartment temperature sensor malfunction • Climate control unit malfunction • Open or short circuit between passenger compartment temperature sensor and climate control unit

Diagnostic Procedure

STEP	INSPECTION		ACTION
1	• Is resistance between terminals 1I and 1M of climate control unit connector (24-pin) as indicated below? — **137 ohms—220 kilohms**	Yes	Replace climate control unit.
		No	Go to the next step.
2	• Inspect passenger compartment temperature sensor. • Is it normal?	Yes	Repair wiring harness.
		No	Replace passenger compartment temperature sensor.

CLIMATE CONTROL UNIT CONNECTOR

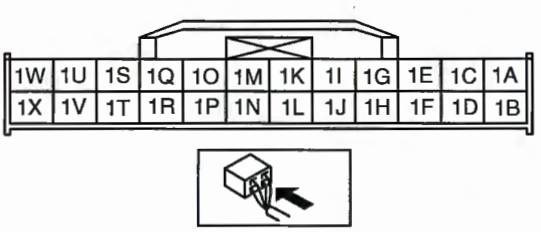

DTC 07 [L3, AJ]

E6U070200000W05

DTC 07	Passenger compartment temperature sensor system inspection
POSSIBLE CAUSE	• Passenger compartment temperature sensor malfunction • Climate control unit malfunction • Open or short circuit between passenger compartment temperature sensor and climate control unit

Diagnostic Procedure

STEP	INSPECTION		ACTION
1	• Inspect passenger compartment temperature sensor. • Is it okay?	Yes	Go to the next step.
		No	Replace passenger compartment temperature sensor. (See 07–40–23 PASSENGER COMPARTMENT TEMPERATURE SENSOR REMOVAL/INSTALLATION [L3, AJ].)
2	• Disconnect climate control unit connector (24-pin) and passenger compartment temperature sensor connector. • Is there an open circuit between the following climate control unit terminals and passenger compartment temperature sensor terminals? — 1I—A — 1M—B	Yes	Repair wiring harness.
		No	Go to the next step.
3	• Is there a short circuit to ground between climate control unit terminal 1M and passenger compartment temperature sensor terminal B?	Yes	Repair wiring harness.
		No	Connect climate control unit connector, then go to the next step.
4	• Turn the ignition switch to ON position. • Measure voltage at climate control unit terminal 1M. • Is voltage **approx. 5V**?	Yes	This system is normal at present. (Erase the past failure from memory.)
		No	Replace climate control unit. (See 07–40–30 CLIMATE CONTROL UNIT REMOVAL [L3, AJ].)

CLIMATE CONTROL UNIT CONNECTOR

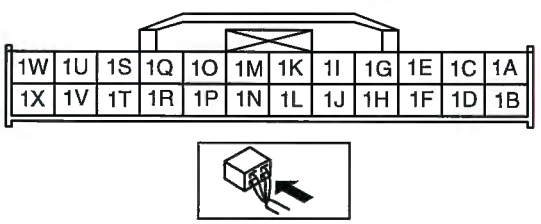

PASSENGER COMPARTMENT TEMPERATURE SENSOR CONNECTOR



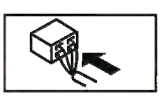

07–02

DTC 07 [L3 WITH TC]

E6U070200000W21

DTC 07	Passenger compartment temperature sensor system inspection
POSSIBLE CAUSE	• Passenger compartment temperature sensor malfunction • Climate control unit malfunction • Open or short circuit between passenger compartment temperature sensor and climate control unit

Diagnostic Procedure

STEP	INSPECTION		ACTION
1	• Inspect passenger compartment temperature sensor. • Is it normal?	Yes	Go to the next step.
		No	Replace passenger compartment temperature sensor.
2	• Disconnect climate control unit connector (24-pin) and passenger compartment temperature sensor connector. • Is there open circuit between the following terminals of climate control unit connector (24-pin) and passenger compartment temperature sensor connector? — 1I—A — 1M—B	Yes	Repair wiring harness.
		No	Go to the next step.
3	• Is there short circuit to ground between terminal 1M of climate control unit connector (24-pin) and B of passenger compartment temperature sensor connector?	Yes	Repair wiring harness.
		No	Connect climate control unit connector, then go to the next step.
4	• Turn the ignition switch to ON position. • Measure voltage at terminal the following terminal 1M of climate control unit connector (24-pin). • Is voltage **approx. 5V**?	Yes	This system is normal at present. (Erase the past failure from memory.)
		No	Replace climate control unit.

CLIMATE CONTROL UNIT CONNECTOR

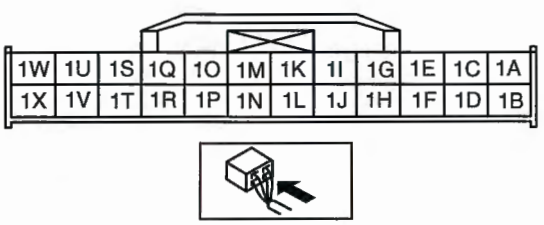

PASSENGER COMPARTMENT TEMPERATURE SENSOR CONNECTOR

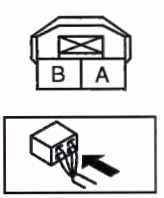

DTC 10 [L3, AJ]

E6U070200000W06

DTC 10	Evaporator temperature sensor system inspection
POSSIBLE CAUSE	• Evaporator temperature sensor malfunction • Climate control unit malfunction • Open or short circuit between evaporator temperature sensor and climate control unit

Diagnostic Procedure

STEP	INSPECTION		ACTION
1	• Is resistance between climate control unit terminals 1I and 1Q as indicated below? — **62 ohms—91 kilohms**	Yes	Replace climate control unit. (See 07–40–30 CLIMATE CONTROL UNIT REMOVAL [L3, AJ].)
		No	Go to the next step.
2	• Inspect evaporator temperature sensor. • Is it okay?	Yes	Repair wiring harness.
		No	Replace evaporator temperature sensor. (See 07–40–24 EVAPORATOR TEMPERATURE SENSOR REMOVAL/ INSTALLATION.)

STEP	INSPECTION	ACTION
	CLIMATE CONTROL UNIT CONNECTOR 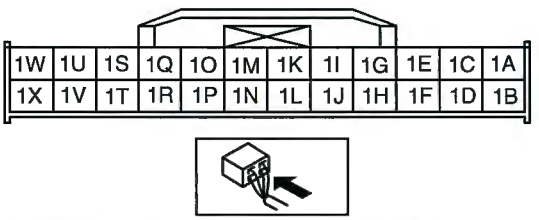	

DTC 10 [L3 WITH TC]

E6U070200000W23

DTC 10	Evaporator temperature sensor system inspection
POSSIBLE CAUSE	• Evaporator temperature sensor malfunction • Climate control unit malfunction • Open or short circuit between evaporator temperature sensor and climate control unit

Diagnostic Procedure

STEP	INSPECTION		ACTION
1	• Is resistance between terminals 1I and 1Q of climate control unit connector (24-pin) as indicated below? — **128 ohms—179 kilohms**	Yes	Replace climate control unit.
		No	Go to the next step.
2	• Inspect evaporator temperature sensor. • Is it normal?	Yes	Repair wiring harness.
		No	Replace evaporator temperature sensor.
	CLIMATE CONTROL UNIT CONNECTOR 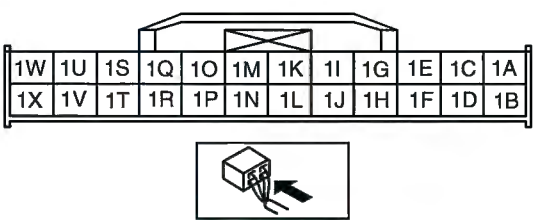		

DTC 11 [L3, AJ]

E6U070200000W07

DTC 11	Evaporator temperature sensor system inspection
POSSIBLE CAUSE	• Evaporator temperature sensor malfunction • Climate control unit malfunction • Open or short circuit between evaporator temperature sensor and climate control unit

Diagnostic Procedure

STEP	INSPECTION		ACTION
1	• Inspect evaporator temperature sensor. • Is it okay?	Yes	Go to the next step.
		No	Replace evaporator temperature sensor. (See 07–40–24 EVAPORATOR TEMPERATURE SENSOR REMOVAL/ INSTALLATION.)
2	• Disconnect climate control unit connector (24-pin) and evaporator temperature sensor connector. • Is there open circuit between following climate control unit terminals and evaporator temperature sensor terminals? — 1Q—C — 1I—A	Yes	Repair wiring harness.
		No	Go to the next step.
3	• Is there short circuit to ground between climate control unit terminal 1Q and evaporator temperature sensor terminal C?	Yes	Repair wiring harness.
		No	Connect climate control unit connector, then go to the next step.
4	• Turn ignition switch to ON position. • Measure voltage at climate control unit terminal 1Q. • Is voltage **approx. 5 V**?	Yes	This system is normal at present. (Erase the past failure from memory.)
		No	Replace climate control unit. (See 07–40–30 CLIMATE CONTROL UNIT REMOVAL [L3, AJ].)

CLIMATE CONTROL UNIT CONNECTOR

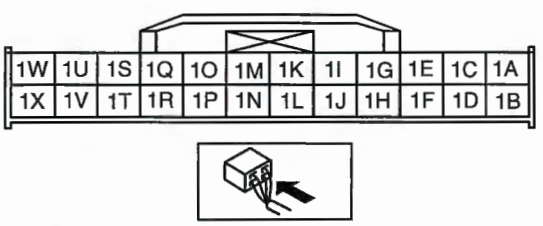

EVAPORATOR TEMPERATURE SENSOR CONNECTOR

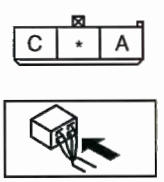

DTC 11 [L3 WITH TC]

E6U070200000W24

DTC 11	Evaporator temperature sensor system inspection
POSSIBLE CAUSE	• Evaporator temperature sensor malfunction • Climate control unit malfunction • Open or short circuit between evaporator temperature sensor and climate control unit

Diagnostic Procedure

STEP	INSPECTION		ACTION
1	• Inspect evaporator temperature sensor. • Is it normal?	Yes	Go to the next step.
		No	Replace evaporator temperature sensor.
2	• Disconnect climate control unit connector (24-pin) and evaporator temperature sensor connector. • Is there open circuit between following terminals of climate control unit connector (24-pin) and evaporator temperature sensor connector? — 1Q—B — 1I—A	Yes	Repair wiring harness.
		No	Go to the next step.
3	• Is there short circuit to ground between terminal 1Q of climate control unit connector (24-pin) and terminal B of evaporator temperature sensor connector?	Yes	Repair wiring harness.
		No	Connect climate control unit connector, then go to the next step.
4	• Turn the ignition switch to ON position. • Measure voltage at terminal 1Q of climate control unit connector (24-pin). • Is voltage **approx. 5 V**?	Yes	This system is normal at present. (Erase the past failure from memory.)
		No	Replace climate control unit.

CLIMATE CONTROL UNIT CONNECTOR

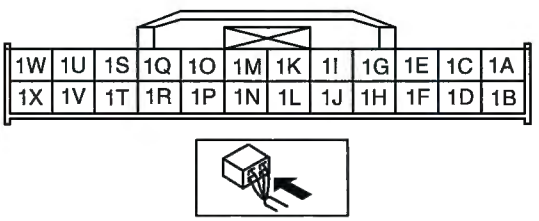

EVAPORATOR TEMPERATURE SENSOR CONNECTOR

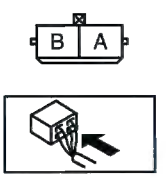

07–02

DTC 12 [L3, AJ]

E6U070200000W08

DTC 12	Ambient temperature sensor system inspection
POSSIBLE CAUSE	• Ambient temperature sensor malfunction • Climate control unit malfunction • Open or short circuit between ambient temperature sensor and climate control unit

Diagnostic Procedure

STEP	INSPECTION		ACTION
1	• Is resistance between climate control unit terminals 1I and 1K as indicated below? — **75 ohms—89 kilohms**	Yes	Replace climate control unit. (See 07–40–30 CLIMATE CONTROL UNIT REMOVAL [L3, AJ].)
		No	Go to the next step.
2	• Inspect ambient temperature sensor. • Is it okay?	Yes	Repair wiring harness.
		No	Replace ambient temperature sensor. (See 07–40–21 AMBIENT TEMPERATURE SENSOR REMOVAL/ INSTALLATION.)

CLIMATE CONTROL UNIT CONNECTOR

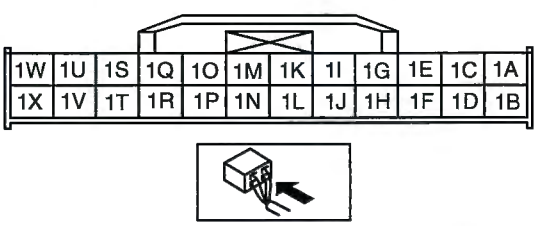

DTC 12 [L3 WITH TC]

E6U070200000W25

DTC 12	Ambient temperature sensor system inspection
POSSIBLE CAUSE	• Ambient temperature sensor malfunction • Climate control unit malfunction • Open or short circuit between ambient temperature sensor and climate control unit

Diagnostic Procedure

STEP	INSPECTION		ACTION
1	• Is resistance between terminals 1I and 1K of climate control unit connector (24-pin) as indicated below? **— 122 ohms—182 kilohms**	Yes	Replace climate control unit.
		No	Go to the next step.
2	• Inspect ambient temperature sensor. • Is it normal?	Yes	Repair wiring harness.
		No	Replace ambient temperature sensor.

CLIMATE CONTROL UNIT CONNECTOR

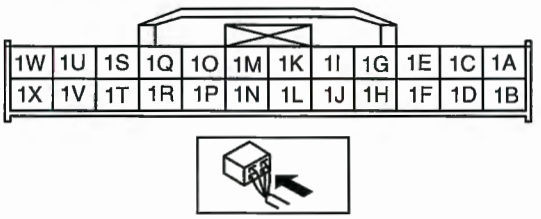

DTC 13 [L3, AJ]

E6U070200000W09

DTC 13	Ambient temperature sensor system inspection
POSSIBLE CAUSE	• Ambient temperature sensor malfunction • Climate control unit malfunction • Open or short circuit between ambient temperature sensor and climate control unit

Diagnostic Procedure

STEP	INSPECTION		ACTION
1	• Inspect ambient temperature sensor. • Is it okay?	Yes	Go to the next step.
		No	Replace ambient temperature sensor. (See 07–40–21 AMBIENT TEMPERATURE SENSOR REMOVAL/ INSTALLATION.)
2	• Disconnect climate control unit connector (24-pin) and ambient temperature sensor connector. • Is there an open circuit between the following climate control unit terminals and ambient temperature sensor terminals? — 1K—B — 1I—A	Yes	Repair wiring harness.
		No	Go to the next step.
3	• Is there a short circuit to ground between climate control unit terminal 1K and ambient temperature sensor terminal B?	Yes	Repair wiring harness.
		No	Connect climate control unit connector, then go to the next step.
4	• Turn ignition switch to ON position. • Measure voltage at climate control unit terminal 1K. • Is voltage **approx. 5 V**?	Yes	This system is normal at present. (Erase the past failure from memory.)
		No	Replace climate control unit. (See 07–40–30 CLIMATE CONTROL UNIT REMOVAL [L3, AJ].)

CLIMATE CONTROL UNIT CONNECTOR

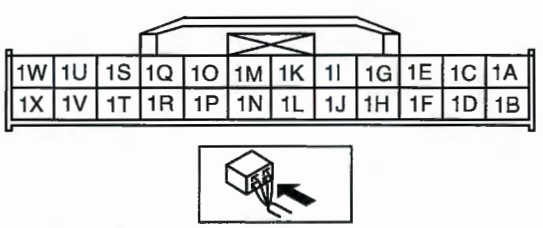

AMBIENT TEMPERATURE SENSOR CONNECTOR

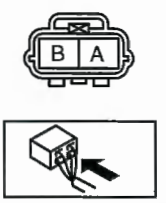

DTC 13 [L3 WITH TC]

E6U070200000W26

DTC 13	Ambient temperature sensor system inspection
POSSIBLE CAUSE	• Ambient temperature sensor malfunction • Climate control unit malfunction • Open or short circuit between ambient temperature sensor and climate control unit

Diagnostic Procedure

STEP	INSPECTION		ACTION
1	• Inspect ambient temperature sensor. • Is it normal?	Yes	Go to the next step.
		No	Replace ambient temperature sensor.
2	• Disconnect climate control unit connector (24-pin) and ambient temperature sensor connector. • Is there open circuit between following terminals of climate control unit connector (24-pin) and ambient temperature sensor connector? — 1K—B — 1I—A	Yes	Repair wiring harness.
		No	Go to the next step.
3	• Is there short circuit to ground between terminal 1K of climate control unit connector (24-pin) and terminal B of ambient temperature sensor connector?	Yes	Repair wiring harness.
		No	Connect climate control unit connector, then go to the next step.
4	• Turn the ignition switch to ON position. • Measure voltage at terminal 1K of climate control unit connector (24-pin). • Is voltage **approx. 5 V**?	Yes	This system is normal at present. (Erase the past failure from memory.)
		No	Replace climate control unit.

CLIMATE CONTROL UNIT CONNECTOR

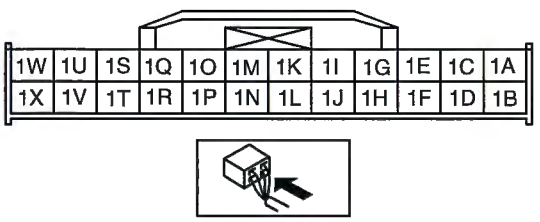

AMBIENT TEMPERATURE SENSOR CONNECTOR

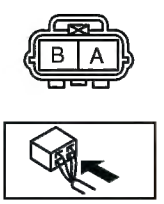

07–02

DTC 14 [L3, AJ]

E6U070200000W10

DTC 14	Water temperature sensor system inspection
POSSIBLE CAUSE	• Water temperature sensor malfunction • Climate control unit malfunction • Open or short circuit between water temperature sensor and climate control unit

Diagnostic Procedure

STEP	INSPECTION		ACTION
1	• Is resistance between climate control unit terminals 1I and 1O as indicated below? • **64 ohms—207 kilohms**	Yes	Replace climate control unit. (See 07–40–30 CLIMATE CONTROL UNIT REMOVAL [L3, AJ].)
		No	Go to the next step.
2	• Inspect water temperature sensor. • Is it okay?	Yes	Repair wiring harness.
		No	Replace water temperature sensor. (See 07–40–25 WATER TEMPERATURE SENSOR REMOVAL/INSTALLATION [L3, AJ].)

CLIMATE CONTROL UNIT CONNECTOR

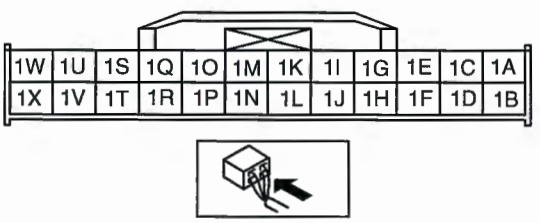

DTC 14 [L3 WITH TC]

E6U070200000W27

DTC 14	A/C water temperature sensor system inspection
POSSIBLE CAUSE	• A/C water temperature sensor malfunction • Climate control unit malfunction • Open or short circuit between A/C water temperature sensor and climate control unit

Diagnostic Procedure

STEP	INSPECTION		ACTION
1	• Is resistance between terminals 1I and 1O of climate control unit connector (24-pin) as indicated below? — **112 ohms—110 kilohms**	Yes	Replace climate control unit.
		No	Go to the next step.
2	• Inspect A/C water temperature sensor. • Is it normal?	Yes	Repair wiring harness.
		No	Replace A/C water temperature sensor.

CLIMATE CONTROL UNIT CONNECTOR

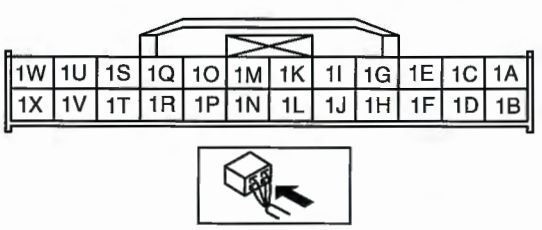

DTC 15 [L3, AJ]

E6U070200000W11

DTC 15	Water temperature sensor system inspection
POSSIBLE CAUSE	• Water temperature sensor malfunction • Climate control unit malfunction • Open or short circuit between water temperature sensor and climate control unit

Diagnostic Procedure

STEP	INSPECTION		ACTION
1	• Is water temperature sensor normal?	Yes	Go to the next step.
		No	Replace water temperature sensor. (See 07–40–25 WATER TEMPERATURE SENSOR REMOVAL/INSTALLATION [L3, AJ].)
2	• Disconnect climate control unit connector (24-pin) and water temperature sensor connector. • Is there an open circuit between the following climate control unit terminals and water temperature sensor terminals? — 1O—B — 1I—A	Yes	Repair wiring harness.
		No	Go to the next step.
3	• Is there a short circuit to ground between climate control unit terminal 1O and water temperature sensor terminal B?	Yes	Repair wiring harness.
		No	Connect climate control unit connector, then go to the next step.
4	• Turn the ignition switch to ON position. • Is voltage at climate control unit terminal 1O **5 V or above**?	Yes	This system is normal at present. (Erase the past failure from memory.)
		No	Replace climate control unit. (See 07–40–30 CLIMATE CONTROL UNIT REMOVAL [L3, AJ].)

CLIMATE CONTROL UNIT CONNECTOR

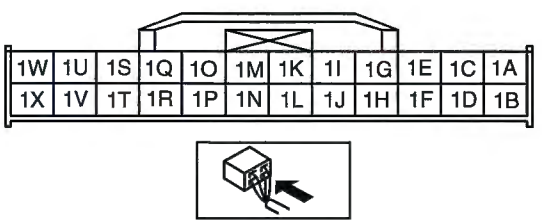

WATER TEMPERATURE SENSOR CONNECTOR

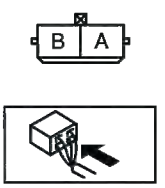

07–02

DTC 15 [L3 WITH TC]

E6U070200000W28

DTC 15	A/C water temperature sensor system inspection
POSSIBLE CAUSE	• A/C water temperature sensor malfunction • Climate control unit malfunction • Open or short circuit between A/C water temperature sensor and climate control unit

Diagnostic Procedure

STEP	INSPECTION		ACTION
1	• Is A/C water temperature sensor normal?	Yes	Go to the next step.
		No	Replace A/C water temperature sensor.
2	• Disconnect climate control unit connector (24-pin) and A/C water temperature sensor connector. • Is there open circuit between following terminals of climate control unit connector (24-pin) and A/C water temperature sensor connector? — 1O—A — 1I—B	Yes	Repair wiring harness.
		No	Go to the next step.
3	• Is there short circuit to ground between terminal 1O of climate control unit connector (24-pin) and terminal A of A/C water temperature sensor connector?	Yes	Repair wiring harness.
		No	Connect climate control unit connector and go to the next step.

STEP	INSPECTION		ACTION
4	• Turn the ignition switch to ON position. • Is voltage at terminal 1O of climate control unit connector (24-pin) **5 V or more**?	Yes	This system is normal at present. (Erase the past failure from memory.)
		No	Replace climate control unit.

CLIMATE CONTROL UNIT CONNECTOR

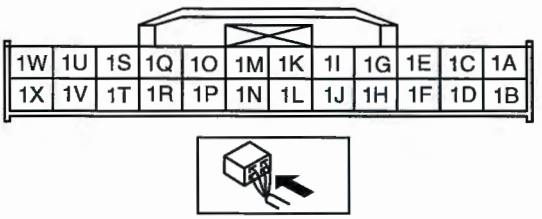

A/C WATER TEMPERATURE SENSOR CONNECTOR

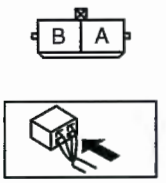

DTC 18 [L3 WITH TC]

E6U070200000W29

DTC 18	Air mix actuator (potentiometer) system inspection
POSSIBLE CAUSE	• Air mix actuator malfunction • Climate control unit malfunction • Open circuit between air mix actuator and climate control unit • Short circuit between air mix actuator (terminal C) and climate control unit (terminal 1U: 24-pin)

Diagnostic Procedure

STEP	INSPECTION		ACTION
1	• Inspect air mix actuator. • Is it normal?	Yes	Go to the next step.
		No	Replace air mix actuator.
2	• Disconnect airflow mode actuator connector. • Is resistance between terminals 1U and 1I of climate control unit connector (24-pin) more than **387 ohms**?	Yes	Go to the next step.
		No	Repair wiring harness. (Short circuit)
3	• Disconnect climate control unit connector (24-pin). • Is resistance between terminals 1B and 1I of climate control unit connector (24-pin) less than **4.8 kilohms**?	Yes	Go to the next step.
		No	Repair wiring harness. (Open circuit)
4	• Is resistance between terminals 1B and 1U of climate control unit connector (24-pin) less than **4.2 kilohms**?	Yes	Replace climate control unit.
		No	Repair wiring harness. (Open circuit)

CLIMATE CONTROL UNIT CONNECTOR

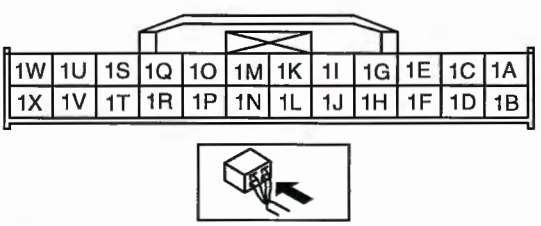

AIR MIX ACTUATOR CONNECTOR

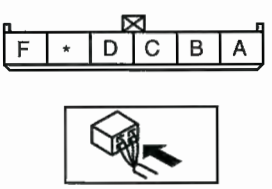

DTC 19 [L3 WITH TC]

E6U070200000W30

DTC 19	Air mix actuator (potentiometer) system inspection
POSSIBLE CAUSE	• Air mix actuator malfunction • Climate control unit malfunction • Open circuit between air mix actuator and climate control unit • Short circuit between air mix actuator (terminal C) and climate control unit (terminal 1U: 24-pin)

Diagnostic Procedure

STEP	INSPECTION		ACTION
1	• Inspect air mix actuator. • Is it normal?	Yes	Go to the next step.
		No	Replace air mix actuator.
2	• Disconnect climate control unit connector (24-pin) and air mix actuator connector. • Is there open circuit between following terminals of climate control unit connector (24-pin) and air mix actuator connector? — 1B—A — 1U—C — 1I—B	Yes	Repair wiring harness.
		No	Go to the next step.
3	• Is there short circuit to ground between terminal 1U of climate control unit connector (24-pin) and terminal C of air mix actuator connector?	Yes	Repair wiring harness.
		No	This system is normal at present. (Erase the past failure from memory.)

CLIMATE CONTROL UNIT CONNECTOR

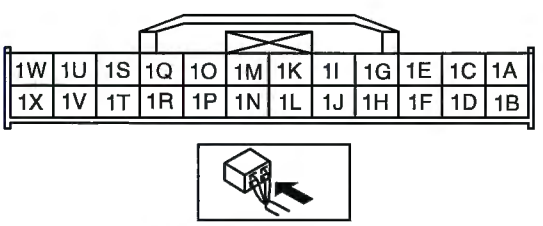

AIR MIX ACTUATOR CONNECTOR

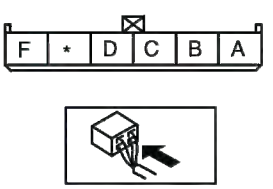

07–02

DTC 21 [L3, AJ]

E6U070200000W12

DTC 21	Airflow mode actuator (potentiometer) system inspection
POSSIBLE CAUSE	• Airflow mode actuator malfunction • Climate control unit malfunction • Open circuit between airflow mode actuator and climate control unit • Short circuit between airflow mode actuator (terminal B) and climate control unit (terminal 1U: 24-pin)

Diagnostic Procedure

STEP	INSPECTION		ACTION
1	• Inspect airflow mode actuator. • Is it okay?	Yes	Go to the next step.
		No	Replace airflow mode actuator. (See 07–40–10 AIRFLOW MODE ACTUATOR REMOVAL/INSTALLATION [L3, AJ].)
2	• Is resistance between climate control unit terminals 1U and 1I more than **4.6 kilohms**?	Yes	Go to the next step.
		No	Repair wiring harness. (Short circuit)
3	• Disconnect climate control unit connectors (24-pin, 12-pin). • Is resistance between climate control unit terminals 2C and 1I less than **28.7 kilohms**?	Yes	Go to the next step.
		No	Repair wiring harness. (Open circuit)
4	• Is resistance between climate control unit terminals 2C and 1U less than **25.1 kilohms**?	Yes	Replace climate control unit. (See 07–40–30 CLIMATE CONTROL UNIT REMOVAL [L3, AJ].)
		No	Repair wiring harness. (Open circuit)

CLIMATE CONTROL UNIT CONNECTOR

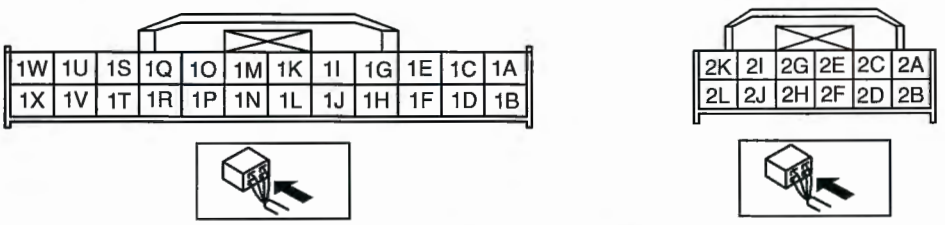

DTC 21 [L3 WITH TC]

E6U070200000W31

DTC 21	Airflow mode actuator (potentiometer) system inspection
POSSIBLE CAUSE	• Airflow mode actuator malfunction • Climate control unit malfunction • Open circuit between airflow mode actuator and climate control unit • Short circuit between airflow mode actuator (terminal C) and climate control unit (terminal 1W: 24-pin)

Diagnostic Procedure

STEP	INSPECTION		ACTION
1	• Inspect airflow mode actuator. • Is it normal?	Yes	Go to the next step.
		No	Replace airflow mode actuator.
2	• Disconnect air mix actuator connector. • Is resistance between terminals 1W and 1I of climate control unit connector (24-pin) more than **387 ohms**?	Yes	Go to the next step.
		No	Repair wiring harness. (Short circuit)
3	• Disconnect climate control unit connector (24-pin). • Is resistance between terminals 1B and 1I of climate control unit connector (24-pin) less than **4.8 kilohms**?	Yes	Go to the next step.
		No	Repair wiring harness. (Open circuit)
4	• Is resistance between terminals 1B and 1W of climate control unit connector (24-pin) less than **4.2 kilohms**?	Yes	Replace climate control unit.
		No	Repair wiring harness. (Open circuit)

CLIMATE CONTROL UNIT CONNECTOR

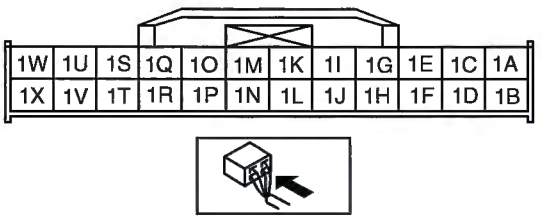

AIRFLOW MODE ACTUATOR CONNECTOR

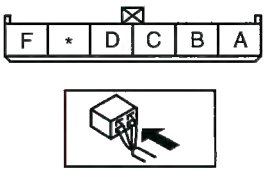

07–02

DTC 22 [L3, AJ]

E6U070200000W13

DTC 22	Airflow mode actuator (potentiometer) system inspection
POSSIBLE CAUSE	• Airflow mode actuator malfunction • Climate control unit malfunction • Open circuit between airflow mode actuator and climate control unit • Short circuit between airflow mode actuator (terminal B) and climate control unit (terminal 1U: 24-pin)

Diagnostic Procedure

STEP	INSPECTION		ACTION
1	• Inspect airflow mode actuator. • Is it okay?	Yes	Go to the next step.
		No	Replace airflow mode actuator. (See 07–40–10 AIRFLOW MODE ACTUATOR REMOVAL/INSTALLATION [L3, AJ].)
2	• Disconnect climate control unit connector (24-pin). • Is there an open circuit between the following climate control unit terminals and airflow mode actuator terminals? — 2C—A — 1U—B — 1I—C	Yes	Repair wiring harness.
		No	Go to the next step.
3	• Is there a short circuit to ground between climate control unit terminal 1U and airflow mode actuator terminal B?	Yes	Repair wiring harness.
		No	This system is normal at present. (Erase the past failure from memory.)

CLIMATE CONTROL UNIT CONNECTOR

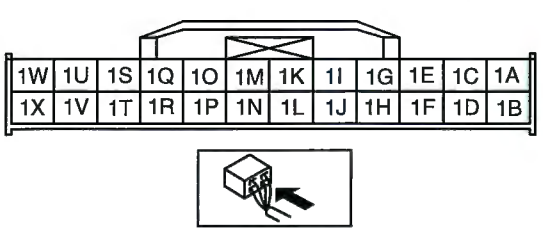

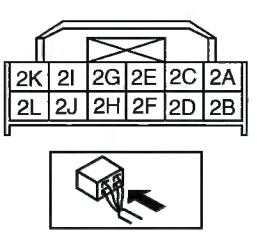

AIRFLOW MODE ACTUATOR CONNECTOR

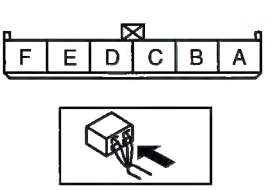

DTC 22 [L3 WITH TC]

E6U070200000W32

DTC 22	Airflow mode actuator (potentiometer) system inspection
POSSIBLE CAUSE	• Airflow mode actuator malfunction • Climate control unit malfunction • Open circuit between airflow mode actuator and climate control unit • Short circuit between airflow mode actuator (terminal C) and climate control unit (terminal 1W: 24-pin)

Diagnostic Procedure

STEP	INSPECTION		ACTION
1	• Inspect airflow mode actuator. • Is it normal?	Yes	Go to the next step.
		No	Replace airflow mode actuator.
2	• Disconnect climate control unit connector (24-pin) and air mix actuator connector. • Is there open circuit between following terminals of climate control unit connector (24-pin) and airflow mode actuator connector? — 1B—B — 1W—C — 1I—A	Yes	Repair wiring harness.
		No	Go to the next step.
3	• Is there short circuit to ground between terminal 1W of climate control unit connector (24-pin) and terminal C of airflow mode actuator connector?	Yes	Repair wiring harness.
		No	This system is normal at present. (Erase the past failure from memory.)

CLIMATE CONTROL UNIT CONNECTOR

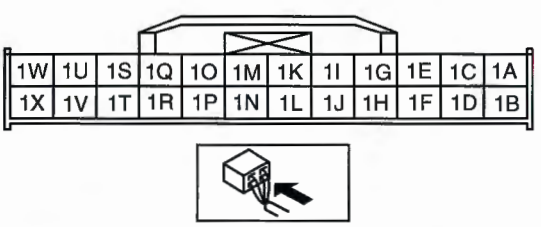

AIRFLOW MODE ACTUATOR CONNECTOR

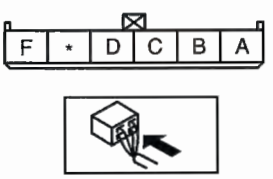

DTC 58 [L3 WITH TC]

E6U070200000W33

DTC 58	Air mix actuator (motor lock) system inspection
POSSIBLE CAUSE	• Air mix actuator malfunction • A/C unit (air mix link and/or air mix crank) malfunction • Climate control unit malfunction • Open or short circuit between air mix actuator and climate control unit

Diagnostic Procedure

STEP	INSPECTION		ACTION
1	• Disconnect air mix actuator connector. • Connect battery positive voltage to terminal D (or terminal F) and ground to terminal F (or terminal D) of air mix actuator connector. • Does air mix actuator operate?	Yes	Connect air mix actuator connector, then go to Step 3.
		No	Go to the next step.
2	• Remove air mix actuator. • Operate air mix link by hand. • Does air mix link operate smoothly?	Yes	Replace air mix actuator.
		No	Replace air mix link and/or air mix crank.
3	• Disconnect climate control unit connect (12-pin). • Connect battery positive voltage to terminal 2D (or terminal 2C) and ground to terminal 2C (or terminal 2D) of climate control unit connector (24-pin). • Does air mix actuator operate?	Yes	Replace climate control unit.
		No	Repair wiring harness.

CLIMATE CONTROL UNIT CONNECTOR

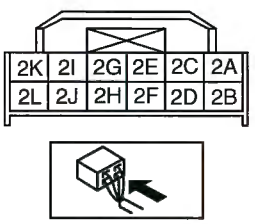

AIR MIX ACTUATOR CONNECTOR

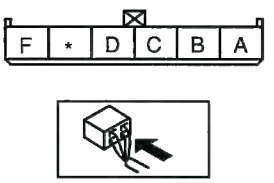

07–02

DTC 59

E6U070200000W14

DTC 59	Airflow mode actuator (motor lock) system inspection
POSSIBLE CAUSE	• Airflow mode actuator malfunction • A/C unit (airflow mode links or airflow mode cranks or both) malfunction • Climate control unit malfunction • Open or short circuit between airflow mode actuator and climate control unit

Diagnostic Procedure

STEP	INSPECTION		ACTION
1	• Disconnect airflow mode actuator connector. • Connect battery positive voltage to airflow mode actuator terminal E (or terminal F) and ground to terminal F (or terminal E). • Does airflow mode actuator operate?	Yes	Connect airflow mode actuator connector, then go to Step 3.
		No	Go to the next step.
2	• Remove airflow mode actuator. • Operate airflow mode main link by hand. • Does airflow mode main link operate smoothly?	Yes	Replace airflow mode actuator. (See 07–40–10 AIRFLOW MODE ACTUATOR REMOVAL/INSTALLATION [L3, AJ].)
		No	Replace airflow mode links or airflow mode cranks or both.
3	• Disconnect climate control unit connector (12-pin). • Connect battery positive voltage to climate control unit terminal 2G (or terminal 2E) and ground to terminal 2E (or terminal 2G). • Does airflow mode actuator operate?	Yes	Replace climate control unit. (See 07–40–30 CLIMATE CONTROL UNIT REMOVAL [L3, AJ].)
		No	Repair wiring harness.

CLIMATE CONTROL UNIT CONNECTOR

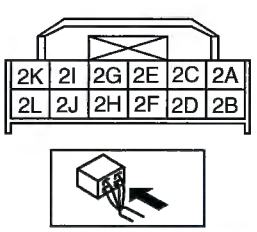

AIRFLOW MODE ACTUATOR CONNECTOR

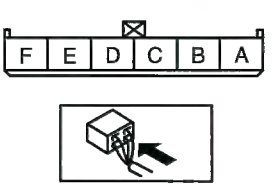

DTC 02, 18, 21 (WHEN TWO OR MORE DTCS ARE INDICATED AT THE SAME TIME) [L3 WITH TC]

E6U070200000W34

DTC 02, 18, 21	Climate control unit (+5 V power supply) inspection
POSSIBLE CAUSE	• Climate control unit malfunction • Short circuit between climate control unit and solar radiation sensor • Short circuit between climate control unit and air mix actuator • Short circuit between climate control unit and airflow mode actuator • Open circuit between climate control unit and solar radiation sensor • Open circuit between climate control unit and air mix actuator • Open circuit between climate control unit and airflow mode actuator

Diagnostic Procedure

STEP	INSPECTION		ACTION
1	• Disconnect climate control unit connector (24-pin) and airflow mode actuator connector. • Is there continuity between terminal 1B of climate control unit connector (24-pin) and terminal B of airflow mode actuator connector?	Yes	Go to the next step.
		No	Repair wiring harness.
2	• Is there short circuit to ground between terminal 1B of climate control unit connector (24-pin) and terminal B of airflow mode actuator connector?	Yes	Repair wiring harness.
		No	Go to the next step.
3	• Is there short circuit to ground between terminal 1B of climate control unit connector (24-pin) and terminal A of air mix actuator connector?	Yes	Repair wiring harness.
		No	Go to the next step.
4	• Is there short circuit to ground between terminal 1B of climate control unit connector (24-pin) and terminal A of solar radiation sensor connector?	Yes	Repair wiring harness.
		No	Replace climate control unit.

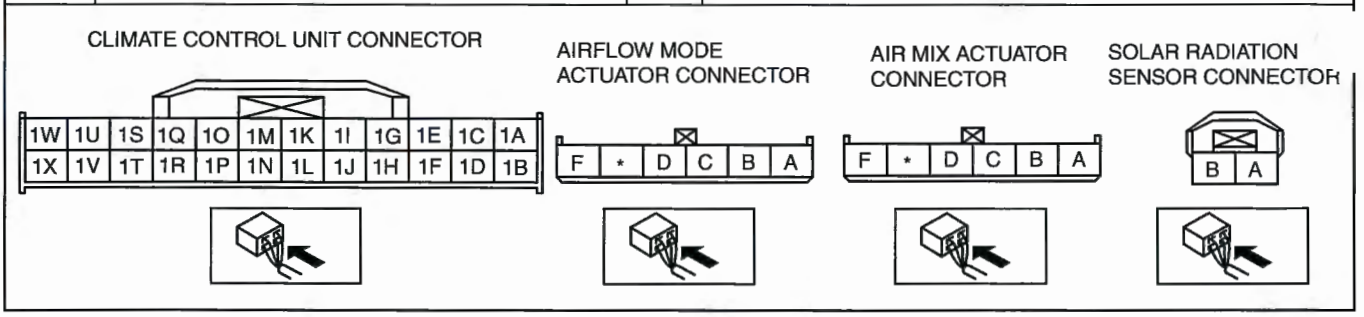

DTC 06, 10, 12, 14, 21 (WHEN TWO OR MORE DTCS ARE INDICATED AT THE SAME TIME)

E6U070200000W15

DTC 06, 10, 12, 14, 21	Climate control unit (+5V power supply or sensor ground system) or sensor ground system inspection
POSSIBLE CAUSE	• Climate control unit malfunction • Open circuit between climate control unit and each temperature sensor • Open circuit between climate control unit and airflow mode actuator

Diagnostic Procedure

STEP	INSPECTION		ACTION
1	• Disconnect climate control unit connector (24-pin) and evaporator temperature sensor connector. • Is there continuity between climate control unit terminal 1I and evaporator temperature sensor terminal A?	Yes	Replace climate control unit. (See 07–40–30 CLIMATE CONTROL UNIT REMOVAL [L3, AJ].)
		No	Repair wiring harness.

CLIMATE CONTROL UNIT CONNECTOR

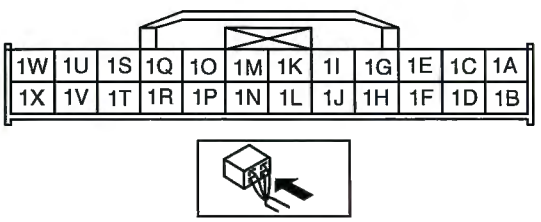

EVAPORATOR TEMPERATURE SENSOR CONNECTOR

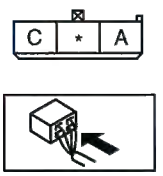

07–02

DTC 06, 10, 12, 14, 18, 21 (WHEN TWO OR MORE DTCS ARE INDICATED AT THE SAME TIME) [L3 WITH TC]

E6U070200000W35

DTC 06, 10, 12, 18, 21	Climate control unit (+5V power supply or sensor ground system) or sensor ground system inspection
POSSIBLE CAUSE	• Climate control unit malfunction • Open circuit between climate control unit and each temperature sensor • Open circuit between climate control unit and air mix actuator • Open circuit between climate control unit and airflow mode actuator

Diagnostic Procedure

STEP	INSPECTION		ACTION
1	• Disconnect climate control unit connector (24-pin) and evaporator temperature sensor connector. • Is there continuity between terminal 1I of climate control unit connector (24-pin) and terminal A of evaporator temperature sensor connector?	Yes	Replace climate control unit.
		No	Repair wiring harness.

CLIMATE CONTROL UNIT CONNECTOR

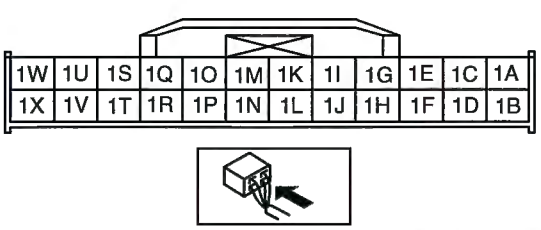

EVAPORATOR TEMPERATURE SENSOR CONNECTOR

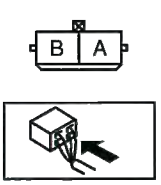

DTC 07, 11, 13, 15, 22 (WHEN TWO OR MORE DTCS ARE INDICATED AT THE SAME TIME)

E6U070200000W16

DTC 07, 11, 13, 15, 22	Climate control unit (+5V power supply or sensor ground system) or sensor ground system inspection
POSSIBLE CAUSE	• Climate control unit malfunction • Open circuit between climate control unit each temperature sensor • Open circuit between climate control unit and airflow mode actuator

Diagnostic Procedure

STEP	INSPECTION		ACTION
1	• Disconnect climate control unit connector (24-pin) and evaporator temperature sensor connector. • Is there an open circuit between climate control unit terminal 1I and evaporator temperature sensor terminal A?	Yes	Repair wiring harness.
		No	This system is normal at present. (Erase the past failure from memory.)

CLIMATE CONTROL UNIT CONNECTOR

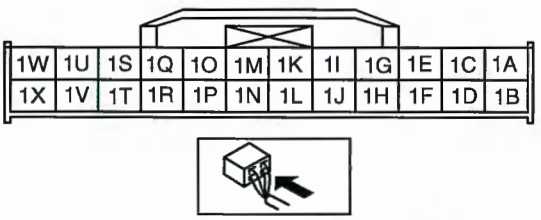

EVAPORATOR TEMPERATURE SENSOR CONNECTOR

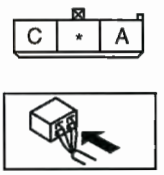

DTC 07, 11, 12, 15, 19, 22 (WHEN TWO OR MORE DTCS ARE INDICATED AT THE SAME TIME) [L3 WITH TC]

E6U070200000W36

DTC 07, 11, 13, 15, 19, 22	Climate control unit (+5V power supply or sensor ground system) or sensor ground system inspection
POSSIBLE CAUSE	• Climate control unit malfunction • Open circuit between climate control unit each temperature sensor • Open circuit between climate control unit and air mix actuator • Open circuit between climate control unit and airflow mode actuator

Diagnostic Procedure

STEP	INSPECTION		ACTION
1	• Disconnect climate control unit connector (24-pin) and evaporator temperature sensor connector. • Is there open circuit between terminal 1I of climate control unit connector (24-pin) and terminal A of evaporator temperature sensor connector?	Yes	Repair wiring harness.
		No	This system is normal at present. (Erase the past failure from memory.)

CLIMATE CONTROL UNIT CONNECTOR

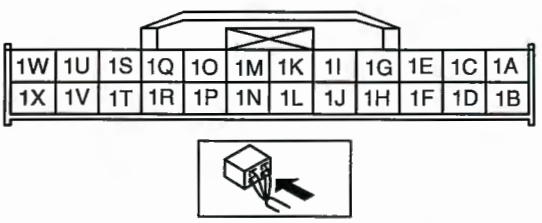

EVAPORATOR TEMPERATURE SENSOR CONNECTOR



DTC 19, 22 (WHEN TWO OR MORE DTCS INDICATED AT THE SAME TIME) [L3 WITH TC]

E6U070200000W37

DTC 19, 22	Climate control unit (+5V power supply) inspection
POSSIBLE CAUSE	• Climate control unit malfunction • Short circuit between climate control unit and solar radiation sensor • Short circuit between climate control unit and air mix actuator • Short circuit between climate control unit and airflow mode actuator • Open circuit between climate control unit and solar radiation sensor • Open circuit between climate control unit and air mix actuator • Open circuit between climate control unit and airflow mode actuator

Diagnostic Procedure

STEP	INSPECTION		ACTION
1	• Disconnect climate control unit connector (24-pin) and airflow mode actuator connector. • Is there open circuit between terminal 1B of climate control unit connector (24-pin) or terminal B of airflow mode actuator connector?	Yes	Repair wiring harness.
		No	Go to the next step.
2	• Is there short circuit to ground between terminal 1B of climate control unit connector (24-pin) and terminal B of airflow mode actuator connector?	Yes	Repair wiring harness.
		No	Go to the next step.
3	• Is there short circuit to ground between terminal 1B of climate control unit connector (24-pin) and terminal A of air mix actuator connector?	Yes	Repair wiring harness.
		No	Go to the next step.
4	• Is there short circuit to ground between terminal 1B of climate control unit connector (24-pin) and terminal A of solar radiation sensor connector?	Yes	Repair wiring harness.
		No	This system is normal at present. (Erase the past failure from memory.)

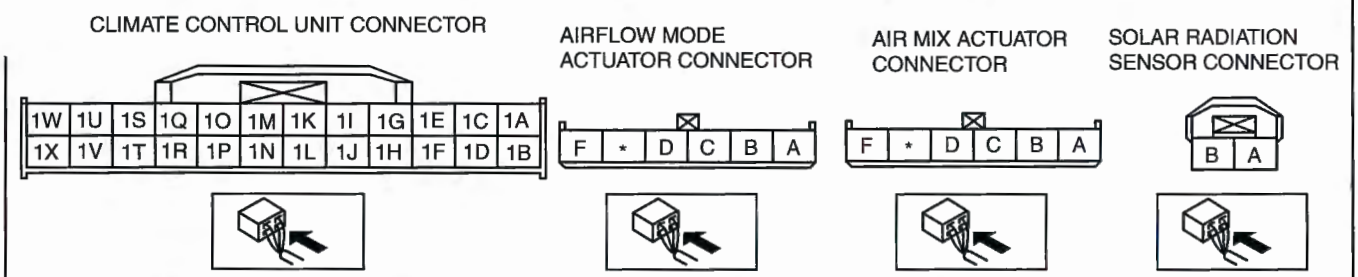

07–03 SYMPTOM TROUBLESHOOTING

HVAC SYSTEM WIRING DIAGRAM [L3, AJ] 07–03–2
HVAC SYSTEM WIRING DIAGRAM [L3 WITH TC] 07–03–4
FOREWORD 07–03–5
TROUBLESHOOTING INDEX [L3, AJ] 07–03–5
TROUBLESHOOTING INDEX [L3 WITH TC] 07–03–5
NO.1 INSUFFICIENT AIR (OR NO AIR) BLOWN FROM VENTS [L3, AJ]..... 07–03–6
NO.1 INSUFFICIENT AIR (OR NO AIR) BLOWN FROM VENTS [L3 WITH TC] 07–03–7
NO.2 AMOUNT OF AIR BLOWN FROM VENTS DOES NOT CHANGE [L3, AJ] 07–03–8
Full-auto Air Conditioner 07–03–8
NO.2 AMOUNT OF AIR BLOWN FROM VENTS DOES NOT CHANGE [L3 WITH TC] 07–03–10
NO.3 AMOUNT OF AIR BLOWN FROM VENTS DOES NOT CHANGE [L3, AJ] 07–03–12
Manual Air Conditioner 07–03–12
NO.3 AIR INTAKE MODE DOES NOT CHANGE [L3 WITH TC]..... 07–03–13
NO.4 AIR INTAKE MODE DOES NOT CHANGE [L3, AJ] 07–03–14
NO.4 NO TEMPERATURE CONTROL WITH CLIMATE CONTROL UNIT [L3 WITH TC] 07–03–17
NO.5 NO TEMPERATURE CONTROL WITH CLIMATE CONTROL UNIT [L3, AJ]..... 07–03–18
NO.5 WINDSHIELD FOGGED [L3 WITH TC] 07–03–19
NO.6 WINDSHIELD FOGGED [L3, AJ]..... 07–03–20
NO.6 AIR FROM VENTS NOT COLD ENOUGH [L3 WITH TC]..... 07–03–22
NO.7 AIR FROM VENTS COLD ENOUGH[L3, AJ]..... 07–03–25
NO.7 NO COOL AIR [L3 WITH TC]..... 07–03–28
NO.8 NO COOL AIR [L3, AJ]..... 07–03–30
NO.8 NOISE WHILE OPERATING A/C SYSTEM [L3 WITH TC] 07–03–32
NO.9 NOISE WHILE OPERATING A/C SYSTEM [L3, AJ]..... 07–03–34

HVAC SYSTEM WIRING DIAGRAM [L3, AJ]

E6U070300000W12

Full-auto air conditioner

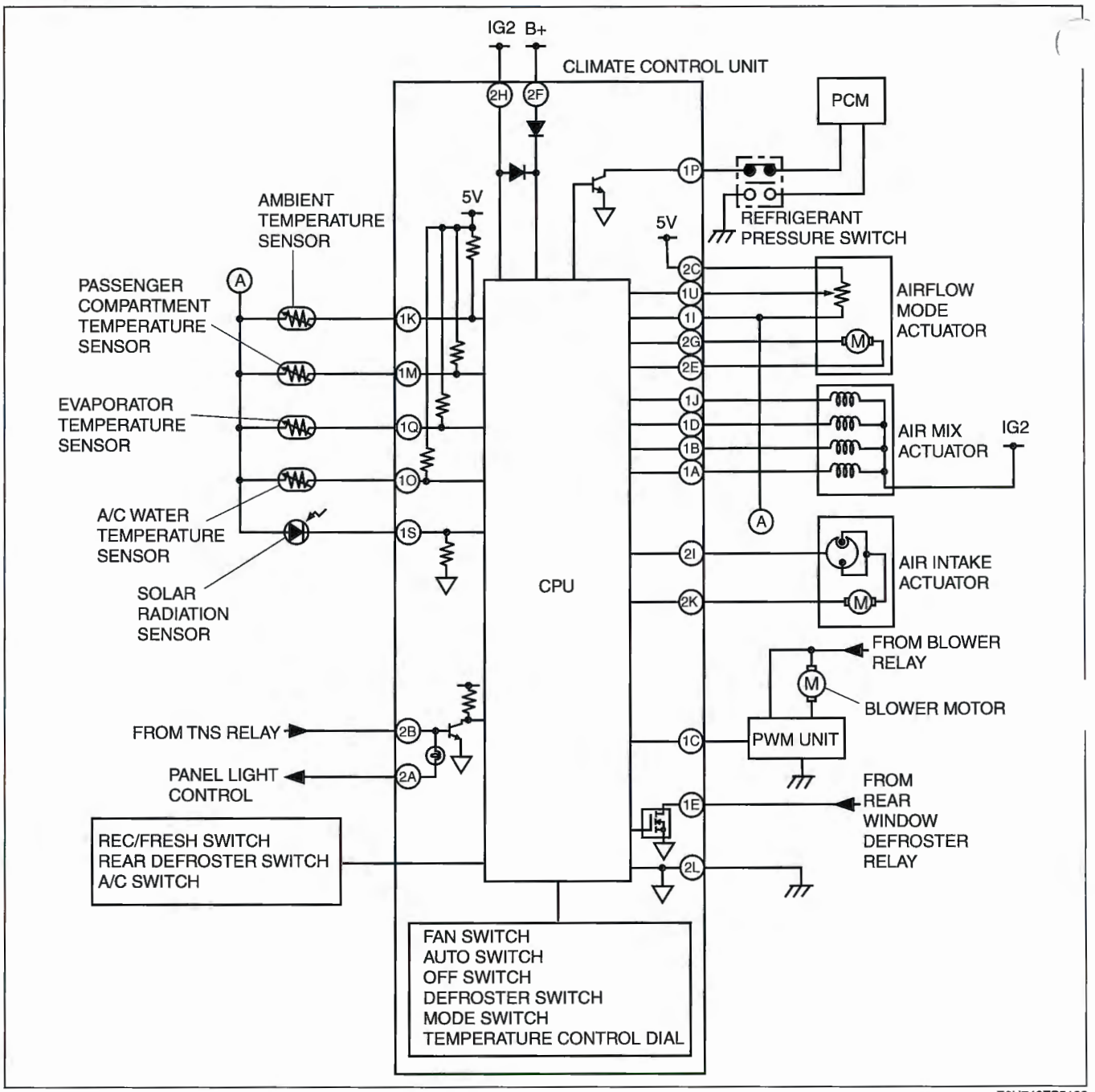

E6U740ZS5102

Manual air conditioner

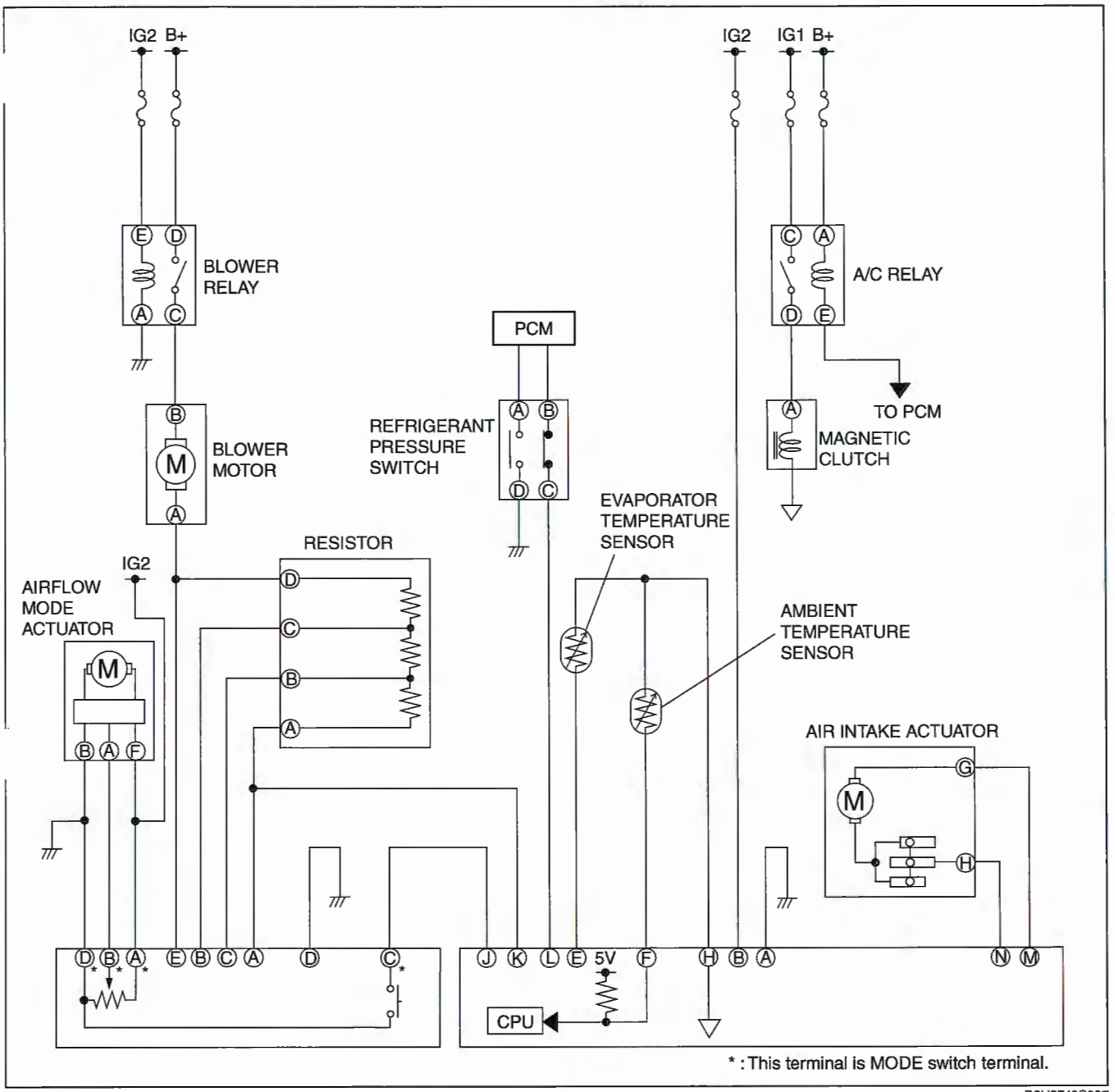

B6U0740S007

HVAC SYSTEM WIRING DIAGRAM [L3 WITH TC]

E6U070300000W13

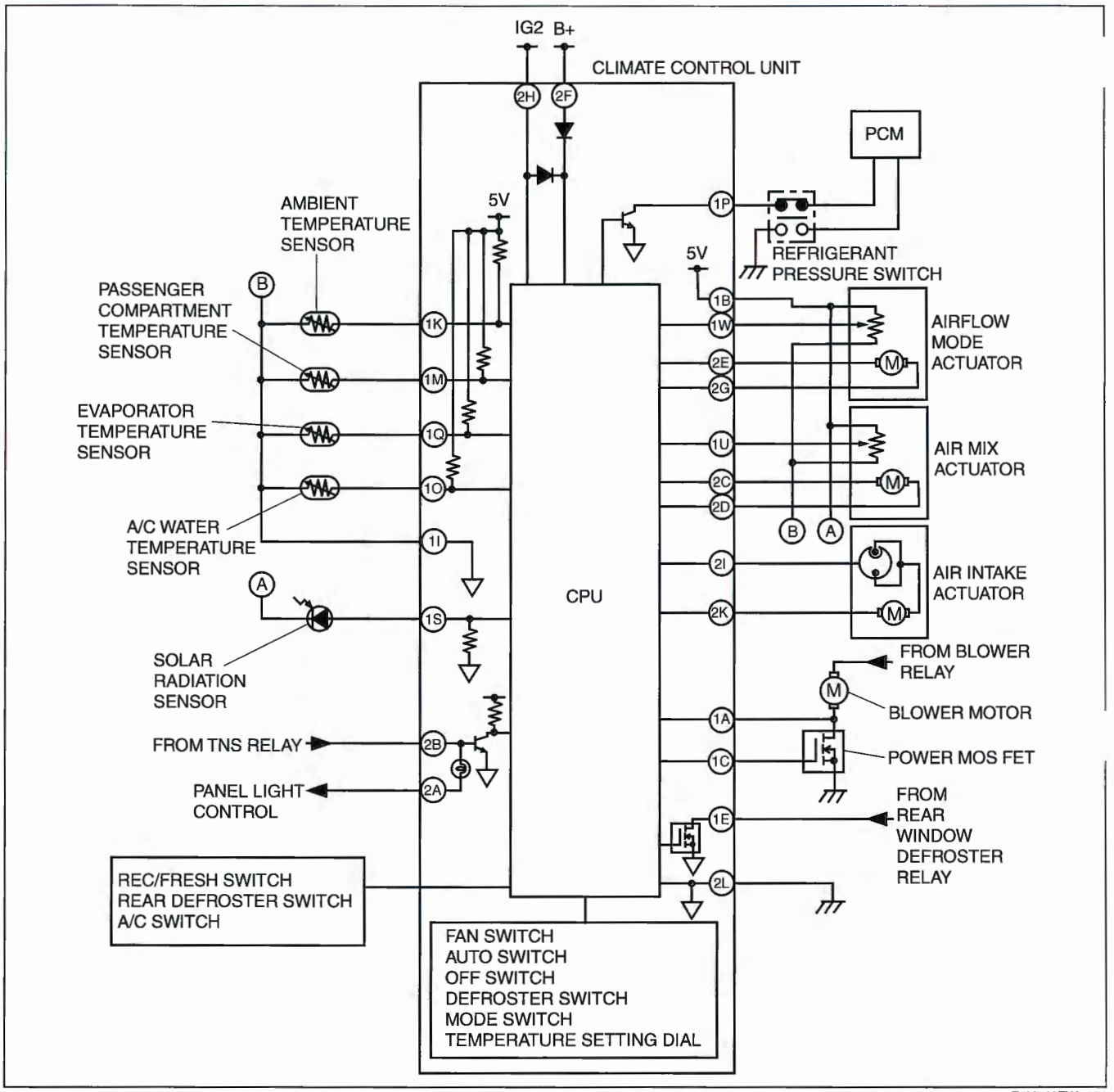

E6U740ZW7101

FOREWORD

E6U070300000W01

- The areas for inspection (steps) are given according to various circuit malfunctions. Use the following chart to verify the symptoms of the trouble in order to diagnose the appropriate area.

TROUBLESHOOTING INDEX [L3, AJ]

E6U070300000W02

No.	TROUBLESHOOTING ITEM	DESCRIPTION
1	Insufficient air (or no air) blown from vents.	• Problem with vents or ducts or both. • Airflow mode does not change.
2	Amount of air blown from vents does not change. (Full-auto air conditioner)	• Malfunction in blower system.
3	Amount of air blown from vents does not change. (Manual air conditioner)	• Malfunction in blower system.
4	Air intake mode does not change.	• Air intake mode does not change when switching REC/FRESH mode.
5	No temperature control with climate control unit.	• Malfunction in A/C unit or climate control unit air mix system or both.
6	Windshield fogged.	• A/C compressor does not operate when airflow mode is in DEFROSTER or HEAT/DEF modes. • Air intake mode does not change to FRESH when airflow mode is in DEFROSTER or HEAT/DEF modes.
7	Air from vents not cold enough.	• Magnetic clutch operates but A/C system malfunctions.
8	No cool air.	• Magnetic clutch does not operate.
9	Noise while operating A/C system.	• Noise from magnetic clutch, A/C compressor, hose or refrigerant line.

07–03

TROUBLESHOOTING INDEX [L3 WITH TC]

E6U070300000W14

No.	TROUBLESHOOTING ITEM	DESCRIPTION
1	Insufficient air (or no air) blown from vents.	• Problem with each vent and/or duct. • Airflow mode does not change.
2	Amount of air blown from vents does not change.	• Malfunction in blower system.
3	Air intake mode does not change.	• Air intake mode does not change when switching REC/FRESH mode.
4	No temperature control with climate control unit.	• Malfunction in A/C unit and/or climate control unit air mix system.
5	Windshield fogged.	• A/C compressor does not operate while airflow mode is in DEFROSTER or HEAT/DEF modes. • Air intake mode does not change to FRESH while airflow mode is in DEFROSTER or HEAT/DEF modes.
6	Air from vents not cold enough.	• Magnetic clutch operates but A/C system malfunctions.
7	No cool air.	• Magnetic clutch does not operate.
8	Noise while operating A/C system.	• Noise from magnetic clutch, A/C compressor, hose or refrigerant line.

NO.1 INSUFFICIENT AIR (OR NO AIR) BLOWN FROM VENTS [L3, AJ]

E6U070300000W03

1	Insufficient air (or no air) blown from vents.
DESCRIPTION	• Problem with each vent or duct or both. • Airflow mode does not change.
POSSIBLE CAUSE	• Malfunction in airflow mode actuator • Malfunction in VENT mode system • Malfunction in HEAT mode system • Malfunction in DEFROSTER mode system

Diagnostic procedure

STEP	INSPECTION		ACTION
1	**INSPECT AIRFLOW MODE ACTUATOR** • Inspect airflow mode actuator. (See 07–40–11 AIRFLOW MODE ACTUATOR INSPECTION [L3, AJ].) • Is it okay?	Yes	Go to the next step.
		No	Repair or replace malfunctioning part in accordance with further inspection result. (See 07–40–11 AIRFLOW MODE ACTUATOR INSPECTION [L3, AJ].)
2	**INSPECT TO SEE WHETHER MALFUNCTION IS IN VENT MODE OR OTHER MODES** • Does air blow out when in VENT mode?	Yes	Go to Step 5.
		No	Go to the next step.
3	**INSPECT VENT** • Is vent clogged?	Yes	Remove obstruction, then go to Step 9.
		No	Go to the next step.
4	**VERIFY THAT DUCT IN DASHBOARD IS INSTALLED** • Is duct in dashboard properly installed?	Yes	Inspect duct for clogging, deformity and air leakage, then go to Step 8.
		No	Install duct securely in the proper position, then go to Step 9.
5	**INSPECT TO SEE WHETHER MALFUNCTION IS IN HEAT MODE OR DEFROSTER MODE** • Does air blow out when in HEAT mode?	Yes	Go to the next step.
		No	Inspect vent for clogging, then go to Step 9.
6	**INSPECT DEFROSTER MODE** • Does air blow out when in DEFROSTER mode?	Yes	Operation is okay. Recheck malfunction symptoms.
		No	Go to the next step.
7	**INSPECT VENT** • Is vent clogged?	Yes	Remove obstruction, then go to Step 9.
		No	Go to the next step.
8	**VERIFY THAT DEFROSTER DUCT IS INSTALLED** • Is defroster duct properly installed?	Yes	Inspect duct for clogging, deformity, and air leakage, then go to the next step.
		No	Install duct securely in proper position, then go to the next step.
9	**CONFIRM THAT MALFUNCTION SYMPTOMS DO NOT RECUR AFTER REPAIR** • Does air blow out?	Yes	Troubleshooting completed. Explain repairs to customer.
		No	Recheck malfunction symptoms, then repeat from Step 1 if malfunction recurs.

NO.1 INSUFFICIENT AIR (OR NO AIR) BLOWN FROM VENTS [L3 WITH TC]

E6U070300000W15

1	Insufficient air (or no air) blown from vents.
ESCRIPTION	• Problem with each vent and/or duct. • Airflow mode does not change.
POSSIBLE CAUSE	• Malfunction in airflow mode actuator • Malfunction in VENT mode system • Malfunction in HEAT mode system • Malfunction in DEFROSTER mode system

Diagnostic procedure

STEP	INSPECTION		ACTION
1	**INSPECT AIRFLOW MODE ACTUATOR** • Inspect airflow mode actuator. • Is it normal?	Yes	Go to the next step.
		No	Repair or replace malfunctioning part in accordance with further inspection result.
2	**INSPECT TO SEE WHETHER MALFUNCTION IS IN VENT MODE OR OTHER MODES** • Does air blow out when in VENT mode?	Yes	Go to Step 5.
		No	Go to the next step.
3	**INSPECT VENT** • Is vent clogged?	Yes	Remove obstruction, then go to Step 9.
		No	Go to the next step.
4	**VERIFY THAT DUCT IN DASHBOARD IS INSTALLED** • Is duct in dashboard properly installed?	Yes	Inspect duct for clogging, deformity and air leakage, then go to Step 9.
		No	Install duct securely in the proper position, then go to Step 9.
5	**INSPECT TO SEE WHETHER MALFUNCTION IS IN HEAT MODE OR DEFROSTER MODE** • Does air blow out when in HEAT mode?	Yes	Go to the next step.
		No	Inspect vent for clogging, then go to Step 9.
6	**INSPECT DEFROSTER MODE** • Does air blow out when in DEFROSTER mode?	Yes	Operation is okay. Recheck malfunction symptoms.
		No	Go to the next step.
7	**INSPECT VENT** • Is vent clogged?	Yes	Remove obstruction, then go to Step 9.
		No	Go to the next step.
8	**VERIFY THAT DEFROSTER DUCT IS INSTALLED** • Is defroster duct properly installed?	Yes	Inspect duct for clogging, deformity, and air leakage, then go to the next step.
		No	Install duct securely in proper position, then go to the next step.
9	**CONFIRM THAT MALFUNCTION SYMPTOMS DO NOT RECUR AFTER REPAIR** • Does air blow out?	Yes	Troubleshooting completed. Explain repairs to customer.
		No	Recheck malfunction symptoms, then repeat from Step 1 if malfunction recurs.

NO.2 AMOUNT OF AIR BLOWN FROM VENTS DOES NOT CHANGE [L3, AJ]

E6U070300000W04

Full-auto Air Conditioner

2	Amount of air blown from vents does not change.
DESCRIPTION	• Malfunction in blower system.
POSSIBLE CAUSE	• Malfunction in blower unit • Malfunction in blower motor • Malfunction in PWM unit system • Malfunction in climate control unit

- When performing an asterisked (*) troubleshooting inspection, shake the wiring harness and connectors while performing the inspection to discover whether poor contact points are the cause of any intermittent malfunctions. If there is a problem, check to make sure connectors, terminals and wiring harnesses are connected correctly and undamaged.

Diagnostic procedure

STEP	INSPECTION		ACTION
1	**INSPECT BLOWER 40 A FUSE** • Inspect BLOWER 40 A fuse. • Is it okay?	Yes	Go to the next step.
		No	Replace fuse, then go to Step 15. If fuse burns out immediately, go to the next step.
2	**INSPECT TO SEE WHETHER MALFUNCTION IS IN BLOWER UNIT OR ELSEWHERE** • Turn ignition switch to ON position. • Turn the fan switch to ON position. • Recirculate air inside vehicle. • Does blower unit fan rotate smoothly?	Yes	Go to the next step.
		No	Go to Step 4.
3	**INSPECT BLOWER UNIT INTAKE VENT** • Is intake vent of blower unit clogged?	Yes	Remove obstruction, then go to Step 15.
		No	Inspect if there are any obstructions in passage between blower unit to A/C unit, then go to Step 15.
4*	**INSPECT TO SEE WHETHER MALFUNCTION IS IN BLOWER RELAY SYSTEM OR PWM UNIT SYSTEM** • Turn ignition switch to ON position. • Turn the fan switch to OFF position. • Test voltage at the following terminal of blower motor: — Terminal B (blower motor operation signal) • Is voltage **approx. 12 V**?	Yes	Go to Step 8.
		No	Go to the next step.
5*	**INSPECT TO SEE WHETHER MALFUNCTION IS IN WIRING HARNESS (LACK OF CONTINUITY BETWEEN FUSE BLOCK AND BLOWER RELAY) OR ELSEWHERE** • Test voltage at the following terminals of blower relay: — Terminal A (IG2 signal) — Terminal C (B+ signal) • Is voltage **approx. 12 V**?	Yes	Go to the next step.
		No	Repair wiring harness between blower relay and BLOWER 40 A fuse, then go to Step 15.
6*	**INSPECT TO SEE WHETHER MALFUNCTION IS IN WIRING HARNESS (LACK OF CONTINUITY BETWEEN BLOWER RELAY AND GROUND) OR ELSEWHERE** • Test voltage at the following terminal of blower relay: — Terminal E (GND signal) • Is voltage **approx. 0 V**?	Yes	Go to the next step.
		No	Repair wiring harness between blower relay and ground, then go to Step 15.
7*	**INSPECT TO SEE WHETHER MALFUNCTION IS IN WIRING HARNESS (LACK OF CONTINUITY BETWEEN BLOWER RELAY AND BLOWER MOTOR) OR BLOWER RELAY** • Test voltage at the following terminal of blower relay: — Terminal D (blower motor operation signal) • Is voltage **approx. 12 V**?	Yes	Repair wiring harness between blower relay and blower motor, then go to Step 15.
		No	Replace blower relay, then go to Step 15.

STEP	INSPECTION		ACTION
8*	**INSPECT TO SEE WHETHER MALFUNCTION IS IN BLOWER MOTOR OR ELSEWHERE** • Test voltage at the following terminal of blower motor: — Terminal A (blower motor operation signal) • Is voltage **approx. 12 V**?	Yes	Go to the next step.
		No	Inspect blower motor, then go to Step 15.
9*	**INSPECT TO SEE WHETHER MALFUNCTION IS IN WIRING HARNESS (LACK OF CONTINUITY BETWEEN BLOWER MOTOR AND PWM UNIT) OR ELSEWHERE** • Test voltage at the following terminal of PWM unit: — Terminal 2C and 1A (blower motor operation signal) • Is voltage **approx. 12 V**?	Yes	Go to the next step.
		No	Repair wiring harness between blower motor and PWM unit, then go to Step 15.
10*	**INSPECT TO SEE WHETHER MALFUNCTION IS IN WIRING HARNESS (LACK OF CONTINUITY BETWEEN PWM UNIT AND GROUND) OR ELSEWHERE** • Test voltage at the following terminal of PWM unit: — Terminal 1B (blower motor operation signal) • Is voltage **approx. 0 V**?	Yes	Go to the next step.
		No	Repair wiring harness between PWM unit and ground, then go to Step 15.
11	**INSPECT BLOWER UNIT** • Inspect fan in blower unit. — Is fan free of interference with blower unit case? — Is fan free of foreign material and obstruction? • Is fan okay?	Yes	Go to the next step.
		No	Remove obstruction, repair or replace fan and blower unit case, then go to Step 15.
2*	**INSPECT TO SEE WHETHER MALFUNCTION IS IN PWM UNIT OR ELSEWHERE** • Turn the fan switch to 1st position from off. • Test voltage at the following terminal of PWM unit: — Terminal 2A (blower motor control signal) • Does voltage change from **12 V to 9 V**?	Yes	Replace PWM unit, then go to Step 15.
		No	Go to the next step.
13*	**INSPECT TO SEE WHETHER MALFUNCTION IS IN WIRING HARNESS (LACK OF CONTINUITY BETWEEN PWM UNIT AND CLIMATE CONTROL UNIT) OR ELSEWHERE** • Turn ignition switch to LOCK position. • Disconnect climate control unit connector. • Inspect for continuity at the following terminals between PWM unit and climate control unit: — Terminal 2A—1C (blower motor control signal) • Is there continuity?	Yes	Go to the next step.
		No	Repair wiring harness between PWM unit and climate control unit, then go to Step 15.
14*	**INSPECT TO SEE WHETHER MALFUNCTION IS IN CLIMATE CONTROL UNIT OR WIRING HARNESS (SHORT TO GROUND BETWEEN PWM UNIT AND CLIMATE CONTROL UNIT)** • Inspect for continuity between the following PWM unit terminal and ground. — Terminal 2A (blower motor control signal) • Is there continuity?	Yes	Repair wiring harness between PWM unit and ground, then go to the next step.
		No	Replace climate control unit, then go to the next step.
15	**CONFIRM THAT MALFUNCTION SYMPTOMS DO NOT RECUR AFTER REPAIR** • Is air discharged from vent?	Yes	Troubleshooting completed. Explain repairs to customer.
		No	Recheck malfunction symptoms, then repeat from Step 1 if malfunction recurs.

NO.2 AMOUNT OF AIR BLOWN FROM VENTS DOES NOT CHANGE [L3 WITH TC]

E6U070300000W16

2	Amount of air blown from vents does not change.
DESCRIPTION	• Malfunction in blower system.
POSSIBLE CAUSE	• Malfunction in blower unit • Malfunction in blower motor • Malfunction in power MOS FET system • Malfunction in climate control unit

- When performing an asterisked (*) troubleshooting inspection, shake the wiring harness and connectors while performing the inspection to discover whether poor contact points are the cause of any intermittent malfunctions. If there is a problem, check to make sure connectors, terminals and wiring harnesses are connected correctly and undamaged.

Diagnostic procedure

STEP	INSPECTION		ACTION
1	**INSPECT BLOWER 40 A FUSE** • Inspect BLOWER 40 A fuse. • Is it normal?	Yes	Go to the next step.
		No	Replace fuse, then go to Step 15. If fuse burns out immediately, go to the next step.
2	**INSPECT TO SEE WHETHER MALFUNCTION IS IN BLOWER UNIT OR ELSEWHERE** • Turn ignition switch to ON position. • Turn the fan switch to ON position. • Recirculate air inside vehicle. • Does blower unit fan rotate smoothly?	Yes	Go to Step 4.
		No	Go to the next step.
3	**INSPECT BLOWER UNIT INTAKE VENT** • Is intake vent of blower unit clogged?	Yes	Remove obstruction, then go to Step 15.
		No	Inspect if there are any obstruction in passage between blower unit to A/C unit, then go to Step 15.
4*	**INSPECT TO SEE WHETHER MALFUNCTION IS IN BLOWER RELAY SYSTEM OR POWER MOS FET SYSTEM** • Turn ignition switch to ON position. • Turn the fan switch to OFF position. • Test voltage at the following terminal of blower motor. — Terminal B (blower motor operation signal) • Is voltage **approx. 12 V**?	Yes	Go to Step 8.
		No	Go to the next step.
5*	**INSPECT TO SEE WHETHER MALFUNCTION IS IN WIRING HARNESS (LACK OF CONTINUITY BETWEEN FUSE BLOCK AND BLOWER RELAY) OR ELSEWHERE** • Test voltage at the following terminal of blower relay. — Terminal A (IG2 signal) — Terminal C (B+ signal) • Is voltage **approx. 12 V**?	Yes	Go to the next step.
		No	Repair wiring harness between blower relay and BLOWER 40 A fuse, then go to Step 15.
6*	**INSPECT TO SEE WHETHER MALFUNCTION IS IN WIRING HARNESS (LACK OF CONTINUITY BETWEEN BLOWER RELAY AND GROUND) OR ELSEWHERE** • Test voltage at the following terminal of blower relay. — Terminal E (GND signal) • Is voltage **approx. 0 V**?	Yes	Go to the next step.
		No	Repair wiring harness between blower relay and ground, then go to Step 15.
7*	**INSPECT TO SEE WHETHER MALFUNCTION IS IN WIRING HARNESS (LACK OF CONTINUITY BETWEEN BLOWER RELAY AND BLOWER MOTOR) OR BLOWER RELAY** • Test voltage at the following terminal of blower relay. — Terminal D (blower motor operation signal) • Is voltage **approx. 12 V**?	Yes	Repair wiring harness between blower relay and blower motor, then go to Step 15.
		No	Replace blower relay, then go to Step 15.

STEP	INSPECTION		ACTION
8*	**INSPECT TO SEE WHETHER MALFUNCTION IS IN BLOWER MOTOR OR ELSEWHERE** • Test voltage at the following terminal of blower motor. — Terminal B (blower motor operation signal) • Is voltage **approx. 12 V**?	Yes	Go to the next step.
		No	Inspect blower motor, then go to Step 15.
9*	**INSPECT TO SEE WHETHER MALFUNCTION IS IN WIRING HARNESS (LACK OF CONTINUITY BETWEEN BLOWER MOTOR AND POWER MOS FET) OR ELSEWHERE** • Test voltage at the following terminal of power MOS FET. — Terminal E (blower motor operation signal) • Is voltage **approx. 12 V**?	Yes	Go to the next step.
		No	Repair wiring harness between blower motor and power MOS FET, then go to Step 15.
10*	**INSPECT TO SEE WHETHER MALFUNCTION IS IN WIRING HARNESS (LACK OF CONTINUITY BETWEEN POWER MOS FET AND GROUND) OR ELSEWHERE** • Test voltage at the following terminal of power MOS FET. — Terminal A (blower motor operation signal) • Is voltage **approx. 0 V**?	Yes	Go to the next step.
		No	Repair wiring harness between power MOS FET and ground, then go to Step 15.
11	**INSPECT BLOWER UNIT** • Inspect fan in blower unit. — Is fan free of interference with blower unit case? — Is fan free of foreign material and obstruction? • Is fan normal?	Yes	Go to the next step.
		No	Remove obstruction, repair or replace fan and blower unit case, then go to Step 15.
12*	**INSPECT TO SEE WHETHER MALFUNCTION IS IN POWER MOS FET OR ELSEWHERE** • Turn the fan switch to 1st position from off. • Disconnect power MOS FET connector. • Test voltage at the following terminal of power MOS FET. — Terminal B (blower motor control signal) • Is voltage **approx. 10 V**?	Yes	Replace power MOS FET, then go to Step 15.
		No	Go to the next step.
13*	**INSPECT TO SEE WHETHER MALFUNCTION IS IN WIRING HARNESS (LACK OF CONTINUITY BETWEEN POWER MOS FET AND CLIMATE CONTROL UNIT) OR ELSEWHERE** • Turn ignition switch to LOCK position. • Disconnect climate control unit connector. • Inspect for continuity at the following terminals between power MOS FET and climate control unit. — Terminal B—1A (24-pin, blower motor control signal) — Terminal E—1C (24-pin, blower motor feedback signal) • Is there continuity?	Yes	Go to the next step.
		No	Repair wiring harness between power MOS FET and climate control unit, then go to Step 15.
14*	**INSPECT TO SEE WHETHER MALFUNCTION IS IN CLIMATE CONTROL UNIT OR WIRING HARNESS (SHORT TO GROUND BETWEEN POWER MOS FET AND CLIMATE CONTROL UNIT)** • Inspect for continuity at the following terminal between power MOS FET and ground. — Terminal A (blower motor control signal)—ground • Is there continuity?	Yes	Repair wiring harness between power MOS FET and ground, then go to the next step.
		No	Replace climate control unit, then go to the next step.
15	**CONFIRM THAT MALFUNCTION SYMPTOMS DO NOT RECUR AFTER REPAIR** • Is air discharged from vent?	Yes	Troubleshooting completed. Explain repairs to customer.
		No	Recheck malfunction symptoms, then repeat from Step 1 if malfunction recurs.

NO.3 AMOUNT OF AIR BLOWN FROM VENTS DOES NOT CHANGE [L3, AJ]

E6U070300000W05

Manual Air Conditioner

3	Amount of air blown from vents does not change.
DESCRIPTION	• Malfunction in blower system.
POSSIBLE CAUSE	• Blower relay, blower motor, resistor, fan switch malfunction • Blower unit malfunction

Diagnostic procedure

STEP	INSPECTION		ACTION
1	**INSPECT BLOWER SYSTEM** • Inspect the following systems and electrical parts: — Blower relay — Blower motor — Resistor — Fan switch — Related wiring harnesses • Are they okay?	Yes	Go to the next step.
		No	Repair or replace malfunctioning part, then go to Step 5.
2	**CHECK TO SEE WHETHER MALFUNCTION IS IN BLOWER UNIT OR ELSEWHERE** • Turn ignition switch to ON position. • Turn fan switch on. • Recirculate air inside vehicle. • Does fan in blower unit rotate smoothly?	Yes	Go to Step 4.
		No	Go to the next step.
3	**INSPECT BLOWER UNIT** • Inspect fan in blower unit. — Is fan free of interference from blower unit case? — Is fan free of foreign material and obstructions? • Is fan okay?	Yes	Go to the next step.
		No	Remove obstruction, repair or replace fan and blower unit case, then go to Step 5.
4	**INSPECT BLOWER UNIT INTAKE VENT** • Is blower unit intake vent clogged?	Yes	Remove obstruction, then go to the next step.
		No	Inspect if there are any obstructions in passage between blower unit and A/C unit, then go to the next step.
5	**VERIFY THAT MALFUNCTION SYMPTOM OCCURS AFTER REPAIR** • Does air blow out?	Yes	Troubleshooting completed. Explain repairs to customer.
		No	Recheck malfunction symptoms, then repeat from Step 1 if malfunction recurs.

NO.3 AIR INTAKE MODE DOES NOT CHANGE [L3 WITH TC]

E6U070300000W17

3	**Air intake mode does not change.**
DESCRIPTION	• Air intake mode does not change when switching REC/FRESH mode.
POSSIBLE CAUSE	• Malfunction in air intake actuator • Malfunction in air intake door

- When performing an asterisked (*) troubleshooting inspection, shake the wiring harness and connectors while performing the inspection to discover whether poor contact points are the cause of any intermittent malfunctions. If there is a problem, check to make sure connectors, terminals and wiring harnesses are connected correctly and undamaged.

Diagnostic procedure

STEP	INSPECTION		ACTION
1*	**INSPECT TO SEE WHETHER MALFUNCTION (LACK OF CONTINUITY) IS IN AIR INTAKE ACTUATOR, WIRING HARNESS (BETWEEN CLIMATE CONTROL UNIT AND AIR INTAKE ACTUATOR) OR ELSEWHERE** • Turn ignition switch to ON position. • Test voltages at the following terminals of climate control unit. — Terminal 2K (12-pin, FRESH motor drive signal) — Terminal 2I (12-pin, RECIRCULATE motor drive signal) (See 07–40–39 CLIMATE CONTROL UNIT INSPECTION [L3 WITH TC].) • Are voltages okay?	Yes	Go to the next step.
		No	Go to Step 3.
2*	**INSPECT TO SEE WHETHER MALFUNCTION (LACK OF CONTINUITY) IS IN AIR INTAKE ACTUATOR OR WIRING HARNESS (BETWEEN CLIMATE CONTROL UNIT AND AIR INTAKE ACTUATOR)** • Test voltages at the following terminals of air intake actuator. — Terminal D (FRESH motor drive signal) — Terminal F (RECIRCULATE motor drive signal) • Are voltages as shown below? — Terminal D: **approx. 0.5 V** during RECIRCULATE and **approx. 10 V** during FRESH — Terminal F: **approx. 10 V** during RECIRCULATE and **approx. 0.5 V** during FRESH	Yes	Replace air intake actuator, then go to Step 8.
		No	Repair wiring harness between climate control unit and air intake actuator, then go to Step 8.
3	**INSPECT TO SEE WHETHER MALFUNCTION IS IN AIR INTAKE ACTUATOR OR ELSEWHERE** • Disconnect air intake actuator connector. • Test voltages at the following terminals of climate control unit. — Terminal 2K (12-pin, FRESH motor drive signal) — Terminal 2I (12-pin, RECIRCULATE motor drive signal) (See 07–40–39 CLIMATE CONTROL UNIT INSPECTION [L3 WITH TC].) • Are voltages okay?	Yes	Inspect air intake actuator, then go to Step 8.
		No	Go to the next step.

STEP	INSPECTION		ACTION
4	**INSPECT TO SEE WHETHER MALFUNCTION IS IN WIRING HARNESS (SHORT TO B+ BETWEEN CLIMATE CONTROL UNIT AND AIR INTAKE ACTUATOR) OR ELSEWHERE** • Disconnect climate control unit connector. • Test voltages at the following terminals of climate control unit. — Terminal 2K (12-pin, FRESH motor drive signal) — Terminal 2I (12-pin, RECIRCULATE motor drive signal) • Are voltages **approx. 0 V**?	Yes	Go to the next step.
		No	Repair wiring harness between climate control unit and air intake actuator, then go to Step 8.
5	**INSPECT TO SEE WHETHER MALFUNCTION IS IN WIRING HARNESS (SHORT TO GROUND BETWEEN CLIMATE CONTROL UNIT AND AIR INTAKE ACTUATOR) OR ELSEWHERE** • Turn ignition switch to LOCK position. • Inspect for continuity at the following terminals between climate control unit and ground. — Terminal 2K (12-pin, FRESH motor drive signal) — Terminal 2I (12-pin, RECIRCULATE motor drive signal) • Is there continuity?	Yes	Repair wiring harness between climate control unit and air intake actuator, then go to Step 8.
		No	Go to the next step.
6	**INSPECT AIR INTAKE LINK** • Inspect air intake links. — Is there grease on link? — Are links securely and properly installed? — Are links free of obstructions and hindrances? • Are above items okay?	Yes	Go to the next step.
		No	Apply grease to links. If any links are damaged, replace air intake actuator, then go to Step 8.
7	**INSPECT TO SEE WHETHER MALFUNCTION IS IN CLIMATE CONTROL UNIT OR AIR INTAKE DOOR** • Inspect blower unit air intake door. — Is door free of obstructions, cracks, and damage? — Are doors securely and properly installed? • Are above items okay?	Yes	Replace climate control unit, then go to the next step.
		No	Remove obstruction, or install doors in proper position. If any doors are cracked or damaged, replace them, then go to the next step.
8	**CONFIRM THAT MALFUNCTION SYMPTOMS DO NOT RECUR AFTER REPAIR** • Does air intake mode change smoothly?	Yes	Troubleshooting completed. Explain repairs to customer.
		No	Recheck malfunction symptoms, then repeat from Step 1 if malfunction recurs.

NO.4 AIR INTAKE MODE DOES NOT CHANGE [L3, AJ]

E6U070300000W06

4	**Air intake mode does not change.**
DESCRIPTION	• Air intake mode does not change when switching REC/FRESH mode.
POSSIBLE CAUSE	• Malfunction in air intake actuator • Malfunction in air intake door

- When performing an asterisked (*) troubleshooting inspection, shake the wiring harness and connectors while performing the inspection to discover whether poor contact points are the cause of any intermittent malfunctions. If there is a problem, check to make sure connectors, terminals and wiring harnesses are connected correctly and undamaged.
- When checking intake motor drive signal, test it within **20 s** after switching REC/FRESH mode. For that signal turns off after **20 s**.

Diagnostic procedure

STEP	INSPECTION		ACTION
1*	**INSPECT TO SEE WHETHER MALFUNCTION (LACK OF CONTINUITY) IS IN AIR INTAKE ACTUATOR, WIRING HARNESS (BETWEEN CLIMATE CONTROL UNIT AND AIR INTAKE ACTUATOR) OR ELSEWHERE** • Turn ignition switch to ON position. • Test voltages at the following terminals of climate control unit: — Terminal 2K (FRESH motor drive signal) — Terminal 2I (RECIRCULATE motor drive signal) (See 07–40–33 Full-auto Air Conditioner) • Are voltages okay?	Yes	Go to the next step.
		No	Go to Step 3.
2*	**INSPECT TO SEE WHETHER MALFUNCTION (LACK OF CONTINUITY) IS IN AIR INTAKE ACTUATOR OR WIRING HARNESS (BETWEEN CLIMATE CONTROL UNIT AND AIR INTAKE ACTUATOR)** • Test voltages at the following terminals of air intake actuator: — Terminal H (FRESH motor drive signal) — Terminal G (RECIRCULATE motor drive signal) • Are voltages as shown below? — Terminal H: **approx. 0.5 V** during RECIRCULATE and **approx. 10 V** during FRESH — Terminal G: **approx. 10 V** during RECIRCULATE and **approx. 0.5 V** during FRESH	Yes	Replace air intake actuator, then go to Step 8.
		No	Repair wiring harness between climate control unit and air intake actuator, then go to Step 8.
3	**INSPECT TO SEE WHETHER MALFUNCTION IS IN AIR INTAKE ACTUATOR OR ELSEWHERE** • Disconnect air intake actuator connector. • Test voltages at the following terminals of climate control unit: — Terminal 2K (FRESH motor drive signal) — Terminal 2I (RECIRCULATE motor drive signal) (See 07–40–33 Full-auto Air Conditioner) • Are voltages okay?	Yes	Inspect air intake actuator, then go to Step 8.
		No	Go to the next step.
4	**INSPECT TO SEE WHETHER MALFUNCTION IS IN WIRING HARNESS (SHORT TO B+ BETWEEN CLIMATE CONTROL UNIT AND AIR INTAKE ACTUATOR) OR ELSEWHERE** • Disconnect climate control unit connector. • Test voltages at the following terminals of climate control unit: — Terminal 2K (FRESH motor drive signal) — Terminal 2I (RECIRCULATE motor drive signal) • Are voltages **approx. 0 V**?	Yes	Go to the next step.
		No	Repair wiring harness between climate control unit and air intake actuator, then go to Step 8.
5	**INSPECT TO SEE WHETHER MALFUNCTION IS IN WIRING HARNESS (SHORT TO GROUND BETWEEN CLIMATE CONTROL UNIT AND AIR INTAKE ACTUATOR) OR ELSEWHERE** • Turn ignition switch to LOCK position. • Inspect for continuity at the following terminals between climate control unit and ground: — Terminal 2K (FRESH motor drive signal) — Terminal 2I (RECIRCULATE motor drive signal) • Is there continuity?	Yes	Repair wiring harness between climate control unit and air intake actuator, then go to Step 8.
		No	Go to the next step.

STEP	INSPECTION		ACTION
6	**INSPECT AIR INTAKE LINK** • Inspect air intake links. — Is there grease on link? — Are links securely and properly installed? — Are links free of obstructions and hindrances? • Are above items okay?	Yes	Go to the next step.
		No	Apply grease to links. If any links are damaged, replace air intake actuator, then go to Step 8.
7	**INSPECT TO SEE WHETHER MALFUNCTION IS IN CLIMATE CONTROL UNIT OR AIR INTAKE DOOR** • Inspect blower unit air intake door. — Is door free of obstructions, cracks, and damage? — Are doors securely and properly installed? • Are above items okay?	Yes	Replace climate control unit, then go to the next step.
		No	Remove obstruction, or install doors in proper positions. If any doors are cracked or damaged, replace them, then go to the next step.
8	**CONFIRM THAT MALFUNCTION SYMPTOMS DO NOT RECUR AFTER REPAIR** • Does air intake mode change smoothly?	Yes	Troubleshooting completed. Explain repairs to customer.
		No	Recheck malfunction symptoms, then repeat from Step 1 if malfunction recurs.

NO.4 NO TEMPERATURE CONTROL WITH CLIMATE CONTROL UNIT [L3 WITH TC]

E6U070300000W18

4	No temperature control with climate control unit.
DESCRIPTION	• Malfunction in A/C unit and/or climate control unit air mix system.
POSSIBLE CAUSE	• A/C unit air mix link, air mix crank, air mix rod, air mix wire, wire clamp malfunction • Climate control unit rack-and-pinion, air mix wire malfunction • A/C unit air mix door malfunction • Heater piping malfunction

Diagnostic procedure

STEP	INSPECTION		ACTION
1	**INSPECT COOLANT TEMPERATURE** • Is coolant sufficiently warmed up?	Yes	Go to the next step.
		No	Warm engine up, then go to Step 8.
2	**INSPECT A/C UNIT AIR MIX SYSTEM** • Inspect A/C unit air mix links, air mix cranks, air mix rods, air mix actuator or wire clamp. — Is there grease on links and cranks? — Are links, cranks, and rods securely installed in their proper positions? — Is wire clamp free of deformation? • Are above items okay?	Yes	Go to the next step.
		No	Apply grease or install links, cranks, and rods securely in their proper positions, repair or replace air mix actuator or wire clamp, then go to Step 8.
3	**VERIFY THAT AIR MIX WIRE FROM A/C UNIT IS POSITIONED SECURELY AND CORRECTLY (IF AVAILABLE)** • Is air mix wire securely installed in the correct position in relation to A/C unit air mix links?	Yes	Go to the next step.
		No	Adjust air mix wire or install securely in correct position, then go to Step 8.
4	**INSPECT CLIMATE CONTROL UNIT** • Inspect climate control unit. (See 07–40–39 CLIMATE CONTROL UNIT INSPECTION [L3 WITH TC].) • Is climate control unit normal?	Yes	Go to the next step.
		No	Repair or replace climate control unit, then go to Step 8.
5	**INSPECT A/C UNIT** • Is there any foreign material or obstruction in A/C unit air mix doors?	Yes	Remove obstruction, then go to Step 8.
		No	Go to the next step.
6	**INSPECT A/C UNIT AIR MIX DOORS** • Is A/C unit air mix door securely and properly installed?	Yes	Inspect air mix door for cracks or damage, then go to the next step.
		No	Install air mix door securely in proper position, then go to the next step.
7	**INSPECT HEATER LINES** • Inspect heater lines. — Is heater piping free of damage and cracks? — Are heater piping connections free of engine coolant leakage? — Are heater piping connections securely tightened? — Are heater piping installation points on A/C unit free of engine coolant leakage? • Are above items okay?	Yes	Operation is okay. Recheck malfunction symptoms.
		No	If heater piping connections is loosed, tighten connections with specified torque. Repair or replace heater piping, then go to the next step.
8	**VERIFY THAT MALFUNCTION SYMPTOM OCCURS AFTER REPAIR** • Does unit operate in every temperature setting?	Yes	Troubleshooting completed. Explain repairs to customer.
		No	Recheck malfunction symptoms, then repeat from Step 1 if malfunction recurs.

NO.5 NO TEMPERATURE CONTROL WITH CLIMATE CONTROL UNIT [L3, AJ]

E6U070300000W07

5	No temperature control with climate control unit.
DESCRIPTION	• Malfunction in A/C unit or climate control unit air mix system or both.
POSSIBLE CAUSE	• A/C unit air mix link, air mix crank, air mix rod, air mix wire, wire clamp malfunction • Climate control unit rack-and-pinion, air mix wire malfunction • A/C unit air mix door malfunction • Heater piping malfunction

Diagnostic procedure

STEP	INSPECTION		ACTION
1	**INSPECT COOLANT TEMPERATURE** • Is coolant sufficiently warmed up?	Yes	Go to the next step.
		No	Warm engine up, then go to Step 8.
2	**INSPECT A/C UNIT AIR MIX SYSTEM** • Inspect A/C unit air mix links, air mix cranks, air mix rods, air mix actuator or wire clamp. — Is there grease on links and cranks? — Are links, cranks, and rods securely installed in their proper positions? — Is wire clamp free of deformation? • Are above items okay?	Yes	Go to the next step.
		No	Apply grease or install links, cranks, and rods securely in their proper positions, repair or replace air mix actuator or wire clamp, then go to Step 8.
3	**VERIFY THAT AIR MIX WIRE FROM A/C UNIT IS POSITIONED SECURELY AND CORRECTLY (IF AVAILABLE)** • Is air mix wire securely installed in the correct position in relation to A/C unit air mix links?	Yes	Go to the next step.
		No	Adjust air mix wire or install securely in correct position, then go to Step 8.
4	**INSPECT CLIMATE CONTROL UNIT** • Inspect climate control unit. (See 07–40–33 CLIMATE CONTROL UNIT INSPECTION [L3, AJ].) • Is climate control unit okay?	Yes	Go to the next step.
		No	Repair or replace climate control unit, then go to Step 8.
5	**INSPECT A/C UNIT** • Is there any foreign material or obstruction in A/C unit air mix doors?	Yes	Remove obstruction, then go to Step 8.
		No	Go to the next step.
6	**INSPECT A/C UNIT AIR MIX DOORS** • Is A/C unit air mix door securely and properly installed?	Yes	Inspect air mix door for cracks or damage, then go to the next step.
		No	Install air mix door securely in proper position, then go to the next step.
7	**INSPECT HEATER LINES** • Inspect heater lines. — Is heater piping free of damage and cracks? — Are heater piping connections free of engine coolant leakage? — Are heater piping connections securely tightened? — Are heater piping installation points on A/C unit free of engine coolant leakage? • Are above items okay?	Yes	Operation is okay. Recheck malfunction symptoms.
		No	If heater piping connections are loose, tighten connections with specified torque. Repair or replace heater piping, then go to the next step.
8	**VERIFY THAT MALFUNCTION SYMPTOM OCCURS AFTER REPAIR** • Does unit operate in every temperature setting?	Yes	Troubleshooting completed. Explain repairs to customer.
		No	Recheck malfunction symptoms, then repeat from Step 1 if malfunction recurs.

NO.5 WINDSHIELD FOGGED [L3 WITH TC]

E6U070300000W19

- When performing an asterisked (*) troubleshooting inspection, shake the wiring harness and connectors while doing the inspection to discover whether poor contact points are the cause of any intermittent malfunctions. If there is a problem, check to make sure connectors, terminals and wiring harness are connected correctly and undamaged.

5	Windshield fogged.
DESCRIPTION	• A/C compressor does not operate while airflow mode is in DEFROSTER or HEAT/DEF modes. • Air intake mode does not change to FRESH while airflow mode is in DEFROSTER or HEAT/DEF modes.
POSSIBLE CAUSE	• Climate control unit (B+ signal) system malfunction • Air intake actuator malfunction • Climate control unit (RECIRCULATE, FRESH signal) system malfunction • Malfunction in blower unit air intake doors

Diagnostic procedure

STEP	INSPECTION		ACTION
1	**COOL AIR BLOW OUT INSPECTION** • When both A/C and fan switch in climate control unit are on, does cool air blow out from front vent?	Yes	Go to the next step.
		No	Go to Step 1 of troubleshooting index No.7.
2	**INSPECT CLIMATE CONTROL UNIT POWER SUPPLY FUSE FOR B+ SIGNAL** • Is climate control unit power supply fuse for B+ signal okay?	Yes	Go to the next step.
		No	Inspect for a short to ground on blown fuse circuit. • Repair or replace as necessary. Install appropriate amperage fuse.
3	**INSPECT AIR INTAKE ACTUATOR** • Inspect air intake actuator. — Is there grease on link? — Is link securely and properly positioned? — Is link free of obstructions? • Are above items okay?	Yes	Go to the next step.
		No	Apply grease or install link properly and securely, remove obstruction, then go to Step 14.
*4	**INSPECT WIRING HARNESS BETWEEN FUSE BLOCK AND CLIMATE CONTROL UNIT FOR CONTINUITY** • Disconnect climate control unit connector (12-pin). • Turn the ignition switch to ON position. • Test voltage at climate control unit connector terminal 2F (B+ signal). • Is voltage **approx. 12 V**?	Yes	Go to the next step.
		No	Repair wiring harness between fuse block and climate control unit, then go to Step 14.
*5	**INSPECT WIRING HARNESS BETWEEN CLIMATE CONTROL UNIT AND GROUND FOR VOLTAGE** • Test voltage at climate control unit connector terminal 2L (Ground). • Is voltage **approx. 0V**?	Yes	Go to the next step.
		No	Repair wiring harness between climate control unit and ground, then go to Step 14.
6	**VERIFY WHETHER MALFUNCTION IS IN BLOWER UNIT AIR INTAKE DOOR OR ELSEWHERE** • Turn the ignition switch to LOCK position. • Connect climate control unit connector (12-pin). • Remove air intake actuator. • Turn the ignition switch to ON position. • Set fan switch to 4th position. • Does air intake mode (RECIRCULATE, FRESH) change smoothly when air intake link is operated by hand?	Yes	Go to the next step.
		No	Go to Step 12.
7	**INSPECT AIR INTAKE ACTUATOR** • Inspect air intake actuator. (See 07–40–7 AIR INTAKE ACTUATOR INSPECTION [L3 WITH TC].) • Is it normal?	Yes	Go to the next step.
		No	Replace air intake actuator, go to Step 14.

STEP	INSPECTION		ACTION
8	**INSPECT AIR INTAKE SELECTOR SWITCH AND DEFROSTER SWITCH IN CLIMATE CONTROL UNIT** • Test voltage at climate control unit connector (12-pin) terminals 2K and 2I. • Is it normal?	Yes	Go to the next step.
		No	Replace climate control unit, then go to Step 14.
*9	**INSPECT WIRING HARNESS BETWEEN CLIMATE CONTROL UNIT AND AIR INTAKE ACTUATOR FOR CONTINUITY** • Turn the ignition switch to LOCK position. • Is there continuity between following climate control unit connector (12-pin) terminal and air intake actuator connector terminal? — Terminal D —Terminal 2K (FRESH signal) — Terminal F —Terminal 2I (RECIRCULATE signal)	Yes	Go to the next step.
		No	Repair wiring harness between climate control unit and air intake actuator, then go to Step 14.
*10	**INSPECT WIRING HARNESS BETWEEN CLIMATE CONTROL UNIT AND AIR INTAKE ACTUATOR FOR SHORT TO GROUND** • Is there continuity between following climate control unit connector (12-pin) terminal and ground? — Terminal 2K (FRESH signal) — Terminal 2I (RECIRCULATE signal)	Yes	Repair wiring harness between climate control unit and air intake actuator, then go to Step 14.
		No	Go to the next step.
*11	**INSPECT WIRING HARNESS BETWEEN CLIMATE CONTROL UNIT AND AIR INTAKE ACTUATOR FOR SHORT TO B+** • Turn the ignition switch to ON position • Test voltage at following climate control unit connector (12-pin) terminal. — Terminal 2K (FRESH signal) — Terminal 2I (RECIRCULATE signal) • Is voltage **approx. 12 V**?	Yes	Repair wiring harness between climate control unit and air intake actuator, then go to Step 14.
		No	Replace climate control unit, then go to Step 14.
12	**INSPECT BLOWER UNIT AIR INTAKE DOOR** • Is there any foreign material or obstruction in blower unit air intake door?	Yes	Remove obstruction, then go to Step 14.
		No	Go to the next step.
13	**VERIFY THAT BLOWER UNIT AIR INTAKE DOOR IS POSITIONED SECURELY AND PROPERLY** • Is blower unit air intake door securely and properly positioned?	Yes	Inspect air intake door for cracks or damage, then go to the next step.
		No	Install air intake door securely in proper position, then go to the next step.
14	**VERIFY THAT MALFUNCTION SYMPTOM OCCURS AFTER REPAIR** • Does malfunction disappear?	Yes	Troubleshooting completed. Explain repairs to customer.
		No	Recheck malfunction symptoms, then repeat from Step 1 if malfunction recurs.

NO.6 WINDSHIELD FOGGED [L3, AJ]

E6U070300000W08

- When performing an asterisked (*) troubleshooting inspection, shake the wiring harness and connectors while doing the inspection to discover whether poor contact points are the cause of any intermittent malfunctions. If there is a problem, check to make sure connectors, terminals and wiring harness are connected correctly and undamaged.
- When checking intake motor drive signal, test it within **20 s** after switching REC/FRESH mode. For that signal turns off after **20 s**.

6	**Windshield fogged.**
DESCRIPTION	• A/C compressor does not operate when airflow mode is in DEFROSTER or HEAT/DEF modes. • Air intake mode does not change to FRESH when airflow mode is in DEFROSTER or HEAT/DEF modes.
POSSIBLE CAUSE	• Climate control unit (B+ signal) system malfunction • Air intake actuator malfunction • Climate control unit (RECIRCULATE, FRESH signal) system malfunction • Malfunction in blower unit air intake doors

Diagnostic procedure

STEP	INSPECTION		ACTION
1	**COOL AIR BLOW OUT INSPECTION** • When both A/C and fan switch in climate control unit are on, does cool air blow out from front vent?	Yes	Go to the next step.
		No	Go to Step 1 of troubleshooting index No.8.
2	**INSPECT CLIMATE CONTROL UNIT POWER SUPPLY FUSE FOR B+ SIGNAL** • Is climate control unit power supply fuse for B+ signal okay?	Yes	Go to the next step.
		No	Inspect for a short to ground on blown fuse circuit. • Repair or replace as necessary. Install appropriate amperage fuse.
3	**INSPECT AIR INTAKE ACTUATOR** • Inspect air intake actuator. — Is there grease on link? — Is link securely and properly positioned? — Is link free of obstructions? • Are above items okay?	Yes	Go to the next step.
		No	Apply grease or install link properly and securely, remove obstruction, then go to Step 14.
*4	**INSPECT WIRING HARNESS BETWEEN FUSE BLOCK AND CLIMATE CONTROL UNIT FOR CONTINUITY** • Disconnect climate control unit connector (12-pin). • Turn ignition switch to ON position. • Test voltage at climate control unit terminal 2F (B+ signal). • Is voltage **approx. 12 V**?	Yes	Go to the next step.
		No	Repair wiring harness between fuse block and climate control unit, then go to Step 14.
*5	**INSPECT WIRING HARNESS BETWEEN CLIMATE CONTROL UNIT AND GROUND FOR VOLTAGE** • Test voltage at climate control unit terminal 2L (Ground). • Is voltage **approx. 0V**?	Yes	Go to the next step.
		No	Repair wiring harness between climate control unit and ground, then go to Step 14.
6	**VERIFY WHETHER MALFUNCTION IS IN BLOWER UNIT AIR INTAKE DOOR OR ELSEWHERE** • Turn ignition switch to LOCK position. • Connect climate control unit connector (12-pin). • Remove air intake actuator. • Turn ignition switch to ON position. • Set fan switch to 4th position. • Does air intake mode (RECIRCULATE, FRESH) change smoothly when air intake link is operated by hand?	Yes	Go to the next step.
		No	Go to Step 12.
7	**INSPECT AIR INTAKE ACTUATOR** • Inspect air intake actuator. (See 07–40–7 AIR INTAKE ACTUATOR INSPECTION [L3, AJ].) • Is it okay?	Yes	Go to the next step.
		No	Replace air intake actuator, then go to Step 14.
8	**INSPECT AIR INTAKE SELECTOR SWITCH AND DEFROSTER SWITCH IN CLIMATE CONTROL UNIT** • Test voltage at climate control unit terminals 2K and 2I. • Is it okay?	Yes	Go to the next step.
		No	Replace climate control unit, then go to Step 14.
*9	**INSPECT WIRING HARNESS BETWEEN CLIMATE CONTROL UNIT AND AIR INTAKE ACTUATOR FOR CONTINUITY** • Turn ignition switch to LOCK position. • Is there continuity between the following climate control unit terminals and air intake actuator terminals? — Terminal 2K—Terminal H (FRESH signal) — Terminal 2I—Terminal G (RECIRCULATE signal)	Yes	Go to the next step.
		No	Repair wiring harness between climate control unit and air intake actuator, then go to Step 14.

STEP	INSPECTION		ACTION
*10	**INSPECT WIRING HARNESS BETWEEN CLIMATE CONTROL UNIT AND AIR INTAKE ACTUATOR FOR SHORT TO GROUND** • Is there continuity between the following climate control unit terminals and ground? — Terminal 2K (FRESH signal) — Terminal 2I (RECIRCULATE signal)	Yes	Repair wiring harness between climate control unit and air intake actuator, then go to Step 14.
		No	Go to the next step.
*11	**INSPECT WIRING HARNESS BETWEEN CLIMATE CONTROL UNIT AND AIR INTAKE ACTUATOR FOR SHORT TO B+** • Turn ignition switch to ON position • Test voltage at the following climate control unit terminals: — Terminal 2K (FRESH signal) — Terminal 2I (RECIRCULATE signal) • Is voltage **approx. 12 V**?	Yes	Repair wiring harness between climate control unit and air intake actuator, then go to Step 14.
		No	Replace climate control unit, then go to Step 14.
12	**INSPECT BLOWER UNIT AIR INTAKE DOOR** • Is there any foreign material or obstruction in blower unit air intake door?	Yes	Remove obstruction, then go to Step 14.
		No	Go to the next step.
13	**VERIFY THAT BLOWER UNIT AIR INTAKE DOOR IS POSITIONED SECURELY AND PROPERLY** • Is blower unit air intake door securely and properly positioned?	Yes	Inspect air intake door for cracks or damage, then go to the next step.
		No	Install air intake door securely in proper position, then go to the next step.
14	**VERIFY THAT MALFUNCTION SYMPTOM OCCURS AFTER REPAIR** • Does malfunction disappear?	Yes	Troubleshooting completed. Explain repairs to customer.
		No	Recheck malfunction symptoms, then repeat from Step 1 if malfunction recurs.

NO.6 AIR FROM VENTS NOT COLD ENOUGH [L3 WITH TC]

E6U070300000V

6	**Air from vents not cold enough.**
DESCRIPTION	• Magnetic clutch operates but A/C system malfunctions.
POSSIBLE CAUSE	• Drive belt malfunction • Malfunction in blower unit or condenser • Malfunction in receiver/drier or expansion valve (valve closes too much) • Malfunction in refrigerant lines • A/C compressor system malfunction, insufficient compressor oil • Over filling of compressor oil, malfunction in expansion valve or A/C unit air mix link system

Diagnostic procedure

STEP	INSPECTION		ACTION
1	**INSPECT DRIVE BELT** • Inspect drive belt. (See 01–10A–3 DRIVE BELT INSPECTION [L3].) • Is it normal?	Yes	Go to the next step.
		No	Adjust or replace drive belt, then go to Step 20.
2	**INSPECT REFRIGERANT SYSTEM PERFORMANCE** • Perform refrigerant system performance test. (See 07–10–4 REFRIGERANT SYSTEM PERFORMANCE TEST [L3 WITH TC].) • Is operation normal?	Yes	Operation is normal. (Recheck malfunction symptoms.)
		No	Go to the next step.
3	**CHECK TO SEE WHETHER MALFUNCTION IS IN BLOWER UNIT INTAKE AND CONDENSER OR ELSEWHERE** • Are refrigerant high-pressure and low-pressure values both high?	Yes	Go to the next step.
		No	Go to Step 6.
4	**INSPECT BLOWER UNIT INTAKE** • Is blower unit intake clogged?	Yes	Remove obstruction, then go to Step 20. (If air does not reach evaporator within A/C unit, heat exchange does not occur and refrigerant pressure becomes high. Therefore, removal of obstruction is necessary.)
		No	Go to the next step.

STEP	INSPECTION		ACTION
5	**INSPECT CONDENSER** • Inspect condenser. (See 07–11–18 CONDENSER INSPECTION.) • Is it normal?	Yes	Adjust refrigerant to specified amount, then go to Step 20. (Excessive amount of refrigerant.)
		No	Replace condenser, or repair and clean condenser fins, then go to Step 20.
6	**CHECK TO SEE WHETHER MALFUNCTION IS IN EXPANSION VALVE, RECEIVER/DRIER AND REFRIGERANT LINES OR ELSEWHERE** • Are refrigerant high-pressure and low-pressure values low?	Yes	Go to the next step.
		No	Go to Step 14.
7	**CHECK TO SEE WHETHER MALFUNCTION IS IN EXPANSION VALVE AND RECEIVER/ DRIER OR ELSEWHERE** • Immediately after A/C compressor operates, does refrigerant high-pressure value momentarily rise to correct value, then fall and stay below it? (Is there negative pressure on low-pressure side?)	Yes	Go to the next step.
		No	Go to Step 10.
8	**CHECK TO SEE WHETHER MALFUNCTION IS IN EXPANSION VALVE OR RECEIVER/ DRIER** • Turn A/C switch off and let air conditioner stop for **10 min**. • Start engine. • Turn both A/C switch and fan switch on. • Does malfunction occur after A/C compressor turns on?	Yes	Go to the next step.
		No	Replace condenser and vacuum refrigerant line **more than 30 min** by vacuum pump, add refrigerant to specified level, then go to Step 20. (Since water has intermixed in receiver/ drier and it is saturated, replacement is necessary.)
9	**VERIFY THAT EXPANSION VALVE HEAT-SENSING TUBE WITHIN A/C UNIT IS POSITIONED SECURELY AND CORRECTLY** • Is expansion valve heat-sensing tube within A/C unit securely installed in proper position?	Yes	Replace expansion valve, then go to Step 20. (Since valve closes too much, replacement is necessary.)
		No	Install heat-sensing tube securely in proper position, then go to Step 20.
10	**INSPECT REFRIGERANT LINES** • Inspect refrigerant lines. — Is piping free of damage and cracks? — Are piping connections free of oil grime? (Visual inspection) — Are piping connections free of gas leakage? — Are piping installation points on condenser free of gas leakage? — Are piping installation points on receiver/ drier free of gas leakage? — Are piping installation points on A/C compressor free of gas leakage? — Are piping installation points on A/C unit free of gas leakage? — Perform gas leak inspection using gas leak tester. • Are above items okay?	Yes	Go to the next step.
		No	If piping or A/C component(s) are damaged or cracked, replace them. Then go to Step 20. If there is no damage, go to Step 13.
11	**INSPECT EVAPORATOR PIPING CONNECTIONS IN A/C UNIT FOR GAS LEAKAGE** • Are piping connections for evaporator in A/C unit free of gas leakage?	Yes	If the vane makes a noise, add **10 ml {10 cc, 0.34 fl oz}** of compressor oil to the A/C compressor. Verify that the noise is no longer heard. Adjust refrigerant to specified amount, then go to Step 20.
		No	If piping is damaged or cracked, replace it. Then go to Step 20. If there is no damage, go to the next step.
12	**INSPECT EVAPORATOR PIPING CONNECTIONS IN A/C UNIT FOR LOOSE** • Are piping connections for evaporator in A/C unit loose?	Yes	Tighten connections with specified torque, adjust both compressor oil and refrigerant to specified amount, then go to Step 20.
		No	If the vane makes a noise, add **10 ml {10 cc, 0.34 fl oz}** of compressor oil to the A/C compressor. Verify that the noise is no longer heard. Replace O-ring on piping, adjust refrigerant to specified amount, then go to Step 20.

STEP	INSPECTION		ACTION
13	**INSPECT PIPING CONNECTIONS FOR LOOSE** • Are piping connections loose?	Yes	Tighten connections with specified torque, adjust both compressor oil and refrigerant to specified amount, then go to Step 20.
		No	If the vane makes a noise, add **10 ml {10 cc, 0.34 fl oz}** of compressor oil to the A/C compressor. Verify that the noise is no longer heard. Replace O-ring on piping, adjust refrigerant to specified amount, then go to Step 20.
14	**CHECK TO SEE WHETHER MALFUNCTION IS IN EXPANSION VALVE, AIR MIX ACTUATOR AND COMPRESSOR OIL OR ELSEWHERE** • Does refrigerant high-pressure value hardly increase?	Yes	Go to the next step. (Pressure hardly increases.)
		No	Go to Step 17.
15	**CHECK TO SEE WHETHER MALFUNCTION IS IN COMPRESSOR OIL AMOUNT AND A/C COMPRESSOR OR ELSEWHERE** • When engine is racing, does high-pressure value increase?	Yes	Return to Step 3.
		No	Go to the next step.
16	**CHECK TO SEE WHETHER MALFUNCTION IS IN COMPRESSOR OIL AMOUNT OR A/C COMPRESSOR** • After compressor oil is replenished each **10 ml {10 cc, 0.34 fl oz}**, does high-pressure value increase?	Yes	Troubleshooting completed. (Explain to customer that cause was insufficient compressor oil.)
		No	Replace A/C compressor, then go to Step 20. (Cause is defective A/C compressor.)
17	**CHECK TO SEE WHETHER MALFUNCTION IS IN EXPANSION VALVE OR ELSEWHERE** • Is only refrigerant low-pressure value high?	Yes	Go to Step 19.
		No	Go to the next step.
18	**VERIFY THAT AIR MIX IS INSTALLED SECURELY AND PROPERLY** • Are A/C unit air mix links, air mix cranks, and air mix rods securely and properly installed?	Yes	Set fan switch to 4th position. Turn A/C switch on. Set FRESH mode. Set temperature control to MAX COLD. Set VENT mode. (1)Start and run the engine at **1,500 rpm** for **10 min.** (2)Run the engine at idle for **1 min.** (3)Within **12 s**, idle → **4,000 rpm** → idle. Perform cycle **5 times.** (4) Run the engine at idle for **30 s.** (5)Drain the compressor oil completely from the A/C compressor and verify the amount. • If there is **approx. 90 ml {90 cc, 3.0 fl oz}** of compressor oil, go to Step 20. • If there is **more than 90 ml {90 cc, 3.0 fl oz}** of compressor oil, remove surplus oil and fill A/C compressor with **90 ml {90 cc, 3.0 fl oz}** of compressor oil. Repeat Steps (1) to (5). (Cause is excessive amount of compressor oil.)
		No	Repair or install links, cranks and rods securely in proper position, then go to Step 20.
19	**VERIFY THAT EXPANSION VALVE HEAT-SENSING TUBE WITHIN A/C UNIT IS POSITIONED SECURELY AND CORRECTLY** • Is expansion valve heat-sensing tube within A/C unit securely installed in proper position?	Yes	Replace expansion valve, then go to the next step. (Since valve opens too much, replacement is necessary.)
		No	Install heat-sensing tube securely in proper position, then go to the next step.
20	**VERIFY THAT MALFUNCTION SYMPTOM OCCURS AFTER REPAIR** • Does cool air blow out? (Are results of refrigerant system performance test okay?)	Yes	Troubleshooting completed. Explain repairs to customer.
		No	Recheck malfunction symptoms, then repeat from Step 1 if malfunction recurs.

NO.7 AIR FROM VENTS COLD ENOUGH [L3, AJ]

E6U070300000W09

7	Air from vents not cold enough.
DESCRIPTION	• Magnetic clutch operates but A/C system malfunctions.
POSSIBLE CAUSE	• Drive belt malfunction • Malfunction in blower unit or condenser • Malfunction in receiver/drier or expansion valve (valve closes too much) • Malfunction in refrigerant lines (Steps 10, 11) • A/C compressor system malfunction, insufficient compressor oil • Over filling of compressor oil, malfunction in expansion valve or A/C unit air mix link system

Diagnostic procedure

STEP	INSPECTION		ACTION
1	**INSPECT DRIVE BELT** • Inspect drive belt. (See 01–10A–3 DRIVE BELT INSPECTION [L3]) (See 01–10C–3 DRIVE BELT INSPECTION [AJ]) • Is it okay?	Yes	Go to the next step.
		No	Adjust or replace drive belt, then go to Step 20.
2	**INSPECT REFRIGERANT SYSTEM PERFORMANCE** • Perform refrigerant system performance test. (See 07–10–3 REFRIGERANT SYSTEM PERFORMANCE TEST [L3, AJ]) • Is operation normal?	Yes	Operation is normal. (Recheck malfunction symptoms.)
		No	Go to the next step.
3	**CHECK TO SEE WHETHER MALFUNCTION IS IN BLOWER UNIT INTAKE AND CONDENSER OR ELSEWHERE** • Are refrigerant high-pressure and low-pressure values both high?	Yes	Go to the next step.
		No	Go to Step 6.
4	**INSPECT BLOWER UNIT INTAKE** • Is blower unit intake clogged?	Yes	Remove obstruction, then go to Step 20. (If air does not reach evaporator within A/C unit, heat exchange does not occur and refrigerant pressure becomes high. Therefore, removal of obstruction is necessary.)
		No	Go to the next step.
5	**INSPECT CONDENSER** • Inspect condenser. (See 07–11–18 CONDENSER INSPECTION.) • Is it okay?	Yes	Adjust refrigerant to specified amount, then go to Step 20. (Excessive amount of refrigerant.)
		No	Replace condenser, or repair and clean condenser fins, then go to Step 20.
6	**CHECK TO SEE WHETHER MALFUNCTION IS IN EXPANSION VALVE, RECEIVER/DRIER AND REFRIGERANT LINES OR ELSEWHERE** • Are refrigerant high-pressure and low-pressure values low?	Yes	Go to the next step.
		No	Go to Step 14.
7	**CHECK TO SEE WHETHER MALFUNCTION IS IN EXPANSION VALVE AND RECEIVER/DRIER OR ELSEWHERE** • Immediately after A/C compressor operates, does refrigerant high-pressure value momentarily rise to correct value, then fall and stay below it? (Is there negative pressure on low-pressure side?)	Yes	Go to the next step.
		No	Go to Step 10.
8	**CHECK TO SEE WHETHER MALFUNCTION IS IN EXPANSION VALVE OR RECEIVER/DRIER** • Turn A/C switch off and let air conditioner stop for **10 min.** • Start engine. • Turn both A/C switch and fan switch on. • Does malfunction occur after A/C compressor turns on?	Yes	Go to the next step.
		No	Replace condenser and bleed refrigerant line for **30 min or more** using a vacuum pump, add refrigerant to specified level, then go to Step 20. (Since water has intermixed in receiver/drier and it is saturated, replacement is necessary.)

STEP	INSPECTION		ACTION
9	**VERIFY THAT EXPANSION VALVE HEAT-SENSING TUBE WITHIN A/C UNIT IS POSITIONED SECURELY AND CORRECTLY** • Is expansion valve heat-sensing tube within A/C unit securely installed in proper position?	Yes	Replace expansion valve, then go to Step 20. (Since valve closes too much, replacement is necessary.)
		No	Install heat-sensing tube securely in proper position, then go to Step 20.
10	**INSPECT REFRIGERANT LINES** • Inspect refrigerant lines. — Is piping free of damage and cracks? — Are piping connections free of oil grime? (Visual inspection) — Are piping connections free of gas leakage? — Are piping installation points on condenser free of gas leakage? — Are piping installation points on receiver/ drier free of gas leakage? — Are piping installation points on A/C compressor free of gas leakage? — Are piping installation points on A/C unit free of gas leakage? — Perform gas leak inspection using gas leak tester. • Are above items okay?	Yes	Go to the next step.
		No	If piping or A/C component(s) are damaged or cracked, replace them. Then go to Step 20. If there is no damage, go to Step 13.
11	**INSPECT EVAPORATOR PIPING CONNECTIONS IN A/C UNIT FOR GAS LEAKAGE** • Are piping connections for evaporator in A/C unit free of gas leakage?	Yes	If the vane makes a noise, add **10 ml {10 cc, 0.34 fl oz}** of compressor oil to the A/C compressor. Verify that the noise is no longer heard. Adjust refrigerant to specified amount, then go to Step 20.
		No	If piping is damaged or cracked, replace it. Then go to Step 20. If there is no damage, go to the next step.
12	**INSPECT EVAPORATOR PIPING CONNECTIONS IN A/C UNIT FOR LOOSE** • Are piping connections for evaporator in A/C unit loose?	Yes	Tighten connections with specified torque, adjust both compressor oil and refrigerant to specified amount, then go to Step 20.
		No	If the vane makes a noise, add **10 ml {10 cc, 0.34 fl oz}** of compressor oil to the A/C compressor. Verify that the noise is no longer heard. Replace O-ring on piping, adjust refrigerant to specified amount, then go to Step 20.
13	**INSPECT PIPING CONNECTIONS FOR LOOSENESS** • Are piping connections loose?	Yes	Tighten connections with specified torque, adjust both compressor oil and refrigerant to specified amount, then go to Step 20.
		No	If the vane makes a noise, add **10 ml {10 cc, 0.34 fl oz}** of compressor oil to the A/C compressor. Verify that the noise is no longer heard. Replace O-ring on piping, adjust refrigerant to specified amount, then go to Step 20.
14	**CHECK TO SEE WHETHER MALFUNCTION IS IN EXPANSION VALVE, AIR MIX ACTUATOR AND COMPRESSOR OIL OR ELSEWHERE** • Does refrigerant high-pressure value increase only a little?	Yes	Go to the next step. (Pressure increases only a little.)
		No	Go to Step 17.
15	**CHECK TO SEE WHETHER MALFUNCTION IS IN COMPRESSOR OIL AMOUNT AND A/C COMPRESSOR OR ELSEWHERE** • When engine is racing, does high-pressure value increase?	Yes	Return to Step 3.
		No	Go to the next step.
16	**CHECK TO SEE WHETHER MALFUNCTION IS IN COMPRESSOR OIL AMOUNT OR A/C COMPRESSOR** • After compressor oil is replenished each **10 ml {10 cc, 0.34 fl oz}**, does high-pressure value increase?	Yes	Troubleshooting completed. (Explain to customer that cause was insufficient compressor oil.)
		No	Replace A/C compressor, then go to Step 20. (Cause is defective A/C compressor.)
17	**CHECK TO SEE WHETHER MALFUNCTION IS IN EXPANSION VALVE OR ELSEWHERE** • Is only refrigerant low-pressure value high?	Yes	Go to Step 19.
		No	Go to the next step.

STEP	INSPECTION		ACTION
18	**VERIFY THAT AIR MIX IS INSTALLED SECURELY AND PROPERLY** • Are A/C unit air mix links, air mix cranks, and air mix rods securely and properly installed?	Yes	Set fan switch to the maximum position. Turn A/C switch on. Set FRESH mode. Set temperature control to MAX COLD. Set VENT mode. (1)Start and run the engine at **1,500 rpm** for **10 min.** (2)Run the engine at idle for **1 min.** (3)Within **12 s**, idle → **4,000 rpm** → idle. Perform cycle **5 times.** (4) Run the engine at idle for **30 s.** (5)Drain the compressor oil completely from the A/C compressor and verify the amount. • If there is **approx. 20 ml {20 cc, 0.7 fl oz}** of compressor oil, go to Step 20. • If there is **20 ml {20 cc, 0.7 fl oz} or more** of compressor oil, remove surplus oil and fill A/C compressor with **20 ml {20 cc, 0.7 fl oz}** of compressor oil. Repeat Steps (1) to (5). (Cause is excessive amount of compressor oil.)
		No	Repair or install links, cranks and rods securely in proper position, then go to Step 20.
19	**VERIFY THAT EXPANSION VALVE HEAT-SENSING TUBE WITHIN A/C UNIT IS POSITIONED SECURELY AND CORRECTLY** • Is expansion valve heat-sensing tube within A/C unit securely installed in proper position?	Yes	Replace expansion valve, then go to the next step. (Since valve opens too much, replacement is necessary.)
		No	Install heat-sensing tube securely in proper position, then go to the next step.
20	**VERIFY THAT MALFUNCTION SYMPTOM OCCURS AFTER REPAIR** • Does cool air blow out? (Are results of refrigerant system performance test okay?)	Yes	Troubleshooting completed. Explain repairs to customer.
		No	Recheck malfunction symptoms, then repeat from Step 1 if malfunction recurs.

NO.7 NO COOL AIR [L3 WITH TC]

E6U070300000W21

7	No cool air
DESCRIPTION	• Magnetic clutch does not operate.
POSSIBLE CAUSE	• Malfunction in PCM A/C cut control system • Malfunction in climate control unit • Malfunction in refrigerant pressure switch • Malfunction in PCM (A/C signal) • Malfunction in PCM (IG1 signal) • Malfunction in A/C compressor • Malfunction in A/C relay • Malfunction in evaporator temperature sensor

- When performing an asterisked (*) troubleshooting inspection, shake the wiring harness and connectors while performing the inspection to discover whether poor contact points are the cause of any intermittent malfunctions. If there is a problem, check to make sure connectors, terminals and wiring harnesses are connected correctly and undamaged.

Diagnostic procedure

STEP	INSPECTION		ACTION
1	**INSPECT AIR BLOW OUT** • Does air blow out?	Yes	Go to the next step.
		No	Go to Step 1 of troubleshooting indexes No.1 and 2.
2	**INSPECT A/C COMPRESSOR OPERATION** • Start engine. • Turn A/C switch and fan switch on. • Does A/C compressor operate?	Yes	Go to Step 1 of troubleshooting index No.6.
		No	Go to the next step.
3	**INSPECT FOR DTC IN PCM** • Inspect for DTCs related to the PCM on-board diagnostic system. • Are any DTCs displayed?	Yes	Go to appropriate inspection procedure.
		No	Go to the next step.
4	**INSPECT TO SEE WHETHER MALFUNCTION IS IN CLIMATE CONTROL UNIT OR ELSEWHERE** • Does cool air blow out when terminal 1P of climate control unit connector (24-pin, A/C signal) is grounded?	Yes	Replace climate control unit, then go to Step 17.
		No	Release short, then go to the next step.
5*	**INSPECT TO SEE WHETHER MALFUNCTION IS IN A/C SIGNAL CIRCUIT (BETWEEN REFRIGERANT PRESSURE SWITCH AND PCM) OR ELSEWHERE** • Test voltage at following terminal of refrigerant pressure switch. — Terminal B (A/C signal) • Is voltage **approx. 12 V**?	Yes	Go to Step 7.
		No	Go to the next step.
6*	**INSPECT TO SEE WHETHER MALFUNCTION (LACK OF CONTINUITY) IS IN WIRING HARNESS (BETWEEN REFRIGERANT PRESSURE SWITCH AND PCM) OR PCM** • Test voltage at A/C signal terminal of PCM. • Is voltage **approx. 12 V**?	Yes	Repair wiring harness between PCM and refrigerant pressure switch, then go to Step 17.
		No	Inspect PCM, then go to Step 17.
7	**INSPECT TO SEE WHETHER MALFUNCTION IS IN REFRIGERANT PRESSURE SWITCH, REFRIGERANT AMOUNT, OR ELSEWHERE** • Does cool air blow out when terminals A and B of refrigerant pressure switch connector are shorted?	Yes	Go to Step 9.
		No	Go to the next step.
8*	**INSPECT TO SEE WHETHER MALFUNCTION IS IN WIRING HARNESS (BETWEEN REFRIGERANT PRESSURE SWITCH AND CLIMATE CONTROL UNIT) OR ELSEWHERE** • Test voltage at following terminal of climate control unit. — Terminal 1P (24-pin, A/C signal) • Is voltage **approx. 12 V**?	Yes	Go to Step 10.
		No	Repair wiring harness between refrigerant pressure switch and climate control unit, then go to Step 17.

STEP	INSPECTION		ACTION
9	**INSPECT TO SEE WHETHER MALFUNCTION IS IN REFRIGERANT PRESSURE SWITCH OR REFRIGERANT AMOUNT** • Inspect refrigerant pressure switch. • Is it normal?	Yes	If refrigerant amount is empty, replace condenser, vacuum refrigerant line **more than 30 min** by vacuum pump, and add refrigerant to specified level, then go to Step 17.
		No	Replace refrigerant pressure switch, then go to Step 17.
10	**INSPECT TO SEE WHETHER MALFUNCTION (LACK OF CONTINUITY) IS IN A/C CONTROL SIGNAL CIRCUIT (BETWEEN A/C RELAY AND PCM) OR ELSEWHERE** • Does cool air blow out when terminal E of A/C relay connector (A/C control signal) is grounded?	Yes	Release short, then go to the next step.
		No	Go to Step 12.
11*	**INSPECT TO SEE WHETHER MALFUNCTION (LACK OF CONTINUITY) IS IN PCM OR WIRING HARNESS (BETWEEN A/C RELAY AND PCM)** • Test voltage at the A/C relay control signal terminal of PCM. • Is voltage **approx. 12 V**?	Yes	Inspect PCM, then go to Step 17.
		No	Repair wiring harness between A/C relay and PCM, then go to Step 17.
12*	**INSPECT TO SEE WHETHER MALFUNCTION IS IN MAGNETIC CLUTCH OR ELSEWHERE** • Test voltage at the following terminal of magnetic clutch thermal protector. — Terminal A (magnetic clutch operation signal) • Is voltage **approx. 12 V**?	Yes	Inspect magnetic clutch, then go to Step 17.
		No	Go to the next step.
13	**INSPECT FUSE** • Are A/C relay power supply fuses okay?	Yes	Go to the next step.
		No	Replace fuse, then go to Step 17. If fuse burns out immediately, go to the next step.
14	**INSPECT WIRING HARNESS BETWEEN FUSE BLOCK AND A/C RELAY FOR LACK OF CONTINUITY** • Test voltages at following terminals of A/C relay. — Terminal A (A/C relay control signal) — Terminal C (A/C control signal) • Are voltages **approx. 12 V**?	Yes	Go to the next step.
		No	Repair wiring harness between fuse block and A/C relay, then go to Step 17.
15	**INSPECT TO SEE WHETHER MALFUNCTION IS IN A/C RELAY OR WIRING HARNESS (BETWEEN A/C RELAY AND MAGNETIC CLUTCH) AND EVAPORATOR TEMPERATURE SENSOR** • Test voltage at the following terminal of A/C relay. — Terminal D (magnetic clutch operation signal) • Is voltage **approx. 12 V**?	Yes	Inspect wiring harness between A/C relay and magnetic clutch. • If above wiring harness is normal, go to the next step. • If above wiring harness malfunctions, repair wiring harness, then go to Step 17.
		No	Replace A/C relay, then go to Step 17.
16	**INSPECT EVAPORATOR TEMPERATURE SENSOR** • Inspect evaporator temperature sensor. • Is it normal?	Yes	Go to the next step.
		No	Replace evaporator temperature sensor, then go to the next step.
17	**CONFIRM THAT MALFUNCTION SYMPTOMS DO NOT RECUR AFTER REPAIR** • Does cool air blow out? (Are the results of refrigerant system performance test okay?)	Yes	Troubleshooting completed. Explain repairs to customer.
		No	Recheck malfunction symptoms, then repeat from Step 1 if malfunction recurs.

NO.8 NO COOL AIR [L3, AJ]

E6U070300000W10

8	No cool air
DESCRIPTION	• Magnetic clutch does not operate.
POSSIBLE CAUSE	• Malfunction in PCM A/C cut control system • Malfunction in climate control unit • Malfunction in refrigerant pressure switch • Malfunction in PCM (A/C signal) • Malfunction in PCM (IG1 signal) • Malfunction in A/C compresso) • Malfunction in A/C relay • Malfunction in evaporator temperature sensor

- When performing an asterisked (*) troubleshooting inspection, shake the wiring harness and connectors while performing the inspection to discover whether poor contact points are the cause of any intermittent malfunctions. If there is a problem, check to make sure connectors, terminals and wiring harnesses are connected correctly and undamaged.

Diagnostic procedure

STEP	INSPECTION		ACTION
1	**INSPECT AIR BLOW OUT** • Does air blow out?	Yes	Go to the next step.
		No	Go to Step 1 of troubleshooting indexes No.1 and 2.
2	**INSPECT A/C COMPRESSOR OPERATION** • Start engine. • Turn A/C switch and fan switch on. • Does A/C compressor operate?	Yes	Go to Step 1 of troubleshooting index No.7.
		No	Go to the next step.
3	**INSPECT FOR PCM DTC** • Inspect for DTCs related to the PCM on-board diagnostic system. • Are any DTCs displayed?	Yes	Go to appropriate inspection procedure.
		No	Go to the next step.
4	**INSPECT TO SEE WHETHER MALFUNCTION IS IN CLIMATE CONTROL UNIT OR ELSEWHERE** • Does cool air blow out when terminal 1P of climate control unit (A/C signal) is grounded?	Yes	Replace climate control unit, then go to Step 17.
		No	Release short, then go to the next step.
5*	**INSPECT TO SEE WHETHER MALFUNCTION IS IN A/C SIGNAL CIRCUIT (BETWEEN REFRIGERANT PRESSURE SWITCH AND PCM) OR ELSEWHERE** • Test voltage at the following terminal of refrigerant pressure switch: — Terminal B (A/C signal) • Is voltage **approx. 12 V**?	Yes	Go to Step 7.
		No	Go to the next step.
6*	**INSPECT TO SEE WHETHER MALFUNCTION (LACK OF CONTINUITY) IS IN WIRING HARNESS (BETWEEN REFRIGERANT PRESSURE SWITCH AND PCM) OR PCM** • Test voltage at PCM A/C signal terminal. — Terminal AV (L3) — Terminal AN (AJ) • Is voltage **approx. 12 V**?	Yes	Repair wiring harness between PCM and refrigerant pressure switch, then go to Step 17.
		No	Inspect PCM, then go to Step 17.
7	**INSPECT TO SEE WHETHER MALFUNCTION IS IN REFRIGERANT PRESSURE SWITCH, REFRIGERANT AMOUNT, OR ELSEWHERE** • Does cool air blow out when terminals A and C of refrigerant pressure switch connector are shorted?	Yes	Go to Step 9.
		No	Go to the next step.
8*	**INSPECT TO SEE WHETHER MALFUNCTION IS IN WIRING HARNESS (BETWEEN REFRIGERANT PRESSURE SWITCH AND CLIMATE CONTROL UNIT) OR ELSEWHERE** • Test voltage at the following terminal of climate control unit. — Terminal 1P (A/C signal) • Is voltage **approx. 12 V**?	Yes	Go to Step 10.
		No	Repair wiring harness between refrigerant pressure switch and climate control unit, then go to Step 17.

STEP	INSPECTION		ACTION
9	**INSPECT TO SEE WHETHER MALFUNCTION IS IN REFRIGERANT PRESSURE SWITCH OR REFRIGERANT AMOUNT** • Inspect refrigerant pressure switch. • Is it okay?	Yes	If there is no refrigerant, replace condenser, bleed the refrigerant line for **30 min or more** using a vacuum pump, and add refrigerant to specified level, then go to Step 17.
		No	Replace refrigerant pressure switch, then go to Step 17.
10	**INSPECT TO SEE WHETHER MALFUNCTION (LACK OF CONTINUITY) IS IN A/C CONTROL SIGNAL CIRCUIT (BETWEEN A/C RELAY AND PCM) OR ELSEWHERE** • Does cool air blow out when A/C relay terminal E (A/C control signal) is grounded?	Yes	Release short, then go to the next step.
		No	Go to Step 12.

11*	**INSPECT TO SEE WHETHER MALFUNCTION (LACK OF CONTINUITY) IS IN PCM OR WIRING HARNESS (BETWEEN A/C RELAY AND PCM)**
	• Test voltage at the PCM A/C relay control signal terminal.
	  • Terminal I (L3)
	  • Terminal AW (AJ)
	• Is voltage **approx. 12 V**?
		Yes	Inspect PCM, then go to Step 17.

		No	Repair wiring harness between A/C relay and PCM, then go to Step 17.
12*	**INSPECT TO SEE WHETHER MALFUNCTION IS IN MAGNETIC CLUTCH OR ELSEWHERE** • Test voltage at the following terminal of magnetic clutch thermal protector: — Terminal A (magnetic clutch operation signal) • Is voltage **approx. 12 V**?	Yes	Inspect magnetic clutch, then go to Step 17.
		No	Go to the next step.
13	**INSPECT FUSE** • Are A/C relay power supply fuses okay?	Yes	Go to the next step.
		No	Replace fuse, then go to Step 17. If fuse burns out immediately, go to the next step.

14	**INSPECT WIRING HARNESS BETWEEN FUSE BLOCK AND A/C RELAY FOR LACK OF CONTINUITY**
	• Test voltages at the following terminals of A/C relay.
	  — Terminal A (A/C relay control signal)
	  — Terminal C (A/C control signal)
	• Are voltages **approx. 12 V**?
		Yes	Go to the next step.

		No	Repair wiring harness between fuse block and A/C relay, then go to Step 17.
15	**INSPECT TO SEE WHETHER MALFUNCTION IS IN A/C RELAY OR WIRING HARNESS (BETWEEN A/C RELAY AND MAGNETIC CLUTCH) AND EVAPORATOR TEMPERATURE SENSOR** • Test voltage at the following terminal of A/C relay: — Terminal D (magnetic clutch operation signal) • Is voltage **approx. 12 V**?	Yes	Inspect wiring harness between A/C relay and magnetic clutch. • If above wiring harness is OK, go to the next step. • If above wiring harness malfunctions, repair wiring harness, then go to Step 17.
		No	Replace A/C relay, then go to Step 17.
16	**INSPECT EVAPORATOR TEMPERATURE SENSOR** • Inspect evaporator temperature sensor. • Is it okay?	Yes	Go to the next step.
		No	Replace evaporator temperature sensor, then go to the next step.
17	**CONFIRM THAT MALFUNCTION SYMPTOMS DO NOT RECUR AFTER REPAIR** • Does cool air blow out? (Are the results of refrigerant system performance test okay?)	Yes	Troubleshooting completed. Explain repairs to customer.
		No	Recheck malfunction symptoms, then repeat from Step 1 if malfunction recurs.

NO.8 NOISE WHILE OPERATING A/C SYSTEM [L3 WITH TC]

E6U070300000W22

8	Noise while operating A/C system.
DESCRIPTION	• Noise from magnetic clutch, A/C compressor, hose or refrigerant line.
POSSIBLE CAUSE	• Magnetic clutch operation noise • A/C compressor vane noise • A/C compressor slippage noise • Hose or refrigerant line interference noise

Diagnostic procedure

STEP	INSPECTION		ACTION
1	**CHECK A/C COMPRESSOR VANE NOISE** • Is there a jingling, popping, beeping, or buzzing sound (A/C compressor vane noise)?	Yes	Go to Step 5.
		No	Go to the next step.
2	**INSPECT A/C COMPRESSOR SLIPPAGE NOISE** • Is there a squeaking or whirling sound (A/C compressor slippage noise)?	Yes	Go to Step 14.
		No	Go to the next step.
3	**INSPECT A/C COMPRESSOR INTERFERENCE NOISE** • Is there a rattling or vibrating sound (interference noise)?	Yes	Go to Step 18.
		No	Go to the next step.
4	**INSPECT MAGNETIC CLUTCH OPERATION NOISE** • Is there a clicking sound (magnetic clutch operation noise)?	Yes	Adjust clearance between pressure plate of magnetic clutch and A/C compressor pulley, then go to Step 19. (See 07–40–19 MAGNETIC CLUTCH ADJUSTMENT [L3 WITH TC].)
		No	Condition is normal. (Recheck malfunction symptoms.)
5	**INSPECT A/C COMPRESSOR NOISE TIME** • Is noise heard continuously for **more than 3 s** after A/C compressor comes on?	Yes	Go to the next step.
		No	Condition is normal. (Noise occurs for **2—3 s** immediately after A/C compressor turns on.)
6	**INSPECT IDLE SPEED** • Inspect idle speed. (See 01–10A–30 Idle Speed Inspection.) • Is it normal?	Yes	Go to the next step.
		No	Follow the repair instruction described in section F, then go to Step 19.
7	**INSPECT REFRIGERANT AMOUNT** • Inspect refrigerant amount. • Is it normal?	Yes	Go to Step 10.
		No	Go to the next step.
8	**INSPECT REFRIGERANT LINES** • Inspect refrigerant lines. — Is piping free of damage and cracks? — Are piping connections free of oil grime? (Visual inspection) — Are piping connections free of gas leakage? — Are piping installation points on condenser free of gas leakage? — Are piping installation points on receiver/drier free of gas leakage? — Are piping installation points on A/C compressor free of gas leakage? — Are piping installation points on A/C unit free of gas leakage — Perform gas leak inspection using gas leak tester. • Are above items okay?	Yes	Go to the next step.
		No	If piping or A/C component(s) is damaged or cracked, replace then go to Step 19. If there is gas leakage, repair or replace connection and replace condenser*, then go to Step 19.
9	**INSPECT EVAPORATOR PIPING CONNECTIONS IN A/C UNIT FOR GAS LEAKAGE** • Are piping connections for evaporator in A/C unit free of gas leakage?	Yes	Adjust refrigerant amount to specified level, then go to Step 19.
		No	If piping is damaged or cracked, replace then go to Step 19. If there is gas leakage, repair or replace connection and replace condenser*, then go to Step 19.
10	**CHECK TO SEE WHETHER MALFUNCTION IS IN COMPRESSOR OIL OR ELSEWHERE** • Add **20 ml {20 cc, 0.8 fl oz}** of compressor oil. • Is noise heard when racing engine?	Yes	Go to the next step.
		No	Troubleshooting completed. Explain repair to customer.

STEP	INSPECTION		ACTION
11	**CHECK TO SEE WHETHER MALFUNCTION IS IN A/C COMPRESSOR OR ELSEWHERE** • Drain compressor oil. • Is it contaminated with metal particles?	Yes	Go to the next step.
		No	Replace A/C compressor, then go to Step 19.
12	**CHECK TO SEE WHETHER MALFUNCTION IS SOMEWHERE IN A/C SYSTEM OR ELSEWHERE** • Is compressor oil whitish and mixed with water?	Yes	Replace entire A/C system (excluding heater), then go to Step 19.
		No	Go to the next step.
13	**INSPECT A/C COMPRESSOR OIL** • Is compressor oil darker than normal and contaminated with aluminum chips?	Yes	Replace A/C compressor and condenser, then go to Step 19. (Since A/C compressor may be worn and receiver/drier may be clogged, replacement of receiver/drier is necessary.)
		No	Condition is normal. Recheck malfunction symptoms.
14	**CHECK TO SEE WHETHER MALFUNCTION IS IN A/C COMPRESSOR OR ELSEWHERE** • Is noise heard immediately after A/C compressor is stopped?	Yes	Replace A/C compressor, then go to Step 19. (A/C compressor discharge valve left open)
		No	Go to the next step.
15	**INSPECT DRIVE BELT** • Inspect drive belt. (See 01–10A–3 DRIVE BELT INSPECTION [L3].) • Is it normal?	Yes	Go to the next step.
		No	Adjust or replace drive belt, then go to Step 19.
16	**INSPECT DRIVE BELT CONDITION** • Is drive belt worn? • Does it have foreign material imbedded in it, or have oil on it?	Yes	Remove obstruction, remove oil, or replace drive belt, then go to Step 19.
		No	Go to the next step.
17	**INSPECT MAGNETIC CLUTCH** • Inspect magnetic clutch. (See 07–40–20 MAGNETIC CLUTCH INSPECTION [L3 WITH TC].) • Is it normal?	Yes	Replace A/C compressor (excluding pressure plate, A/C compressor pulley, and stator), then go to Step 19.
		No	Replace magnetic clutch, then go to Step 19.
18	**CHECK TO SEE WHETHER MALFUNCTION IS IN A/C COMPRESSOR OR REFRIGERANT LINES** • Is noise emitted from A/C compressor?	Yes	Visually inspect A/C compressor, replace appropriate parts if necessary, then go to the next step.
		No	If noise is due to refrigerant lines, repair detached or missing clips, tighten loose bolts, then go to the next step.
19	**VERIFY THAT MALFUNCTION SYMPTOM OCCURS AFTER REPAIR** • Has A/C compressor noise stopped?	Yes	Troubleshooting completed. Explain repairs to customer.
		No	Recheck malfunction symptoms, then repeat from Step 1 if malfunction recurs.

* : If there is gas leakage, air enters into the A/C system. The desiccant within the receiver/drier absorbs the moisture from the air and becomes saturated. If the A/C system is used in this condition, the inside of the A/C compressor will begin to rust due to this moisture, which may cause lock up or noise to occur. Therefore, replacement of the receiver/drier is necessary.

NO.9 NOISE WHILE OPERATING A/C SYSTEM [L3, AJ]

E6U070300000W11

9	Noise while operating A/C system.
DESCRIPTION	• Noise from magnetic clutch, A/C compressor, hose or refrigerant line.
POSSIBLE CAUSE	• Magnetic clutch operation noise • A/C compressor slippage noise • Hose or refrigerant line interference noise

Diagnostic procedure

STEP	INSPECTION		ACTION
1	**INSPECT A/C COMPRESSOR SLIPPAGE NOISE** • Is there a squeaking or whirling sound (A/C compressor slippage noise)?	Yes	Go to Step 13.
		No	Go to the next step.
2	**INSPECT A/C COMPRESSOR INTERFERENCE NOISE** • Is there a rattling or vibrating sound (interference noise)?	Yes	Go to Step 17.
		No	Go to the next step.
3	**INSPECT MAGNETIC CLUTCH OPERATION NOISE** • Is there a clicking sound (magnetic clutch operation noise)?	Yes	Adjust clearance between pressure plate of magnetic clutch and A/C compressor pulley, then go to Step 18. (See 07–40–19 MAGNETIC CLUTCH ADJUSTMENT [L3, AJ].)
		No	Condition is normal. (Recheck malfunction symptoms.)
4	**INSPECT A/C COMPRESSOR NOISE TIME** • Is noise heard continuously for **3 s or more** after A/C compressor comes on?	Yes	Go to the next step.
		No	Condition is normal. (Noise occurs for **2—3 s** immediately after A/C compressor turns on.)
5	**INSPECT IDLE SPEED** • Inspect idle speed. (See 01–10A–30 Idle Speed Inspection.) (See 01–10C–39 Idle Speed Inspection.) • Is it okay?	Yes	Go to the next step.
		No	Follow the repair instruction described in section F, then go to Step 18.
6	**INSPECT REFRIGERANT AMOUNT** • Inspect refrigerant amount. • Is it okay?	Yes	Go to Step 9.
		No	Go to the next step.
7	**INSPECT REFRIGERANT LINES** • Inspect refrigerant lines. — Is piping free of damage and cracks? — Are piping connections free of oil grime? (Visual inspection) — Are piping connections free of gas leakage? — Are piping installation points on condenser free of gas leakage? — Are piping installation points on receiver/ drier free of gas leakage? — Are piping installation points on A/C compressor free of gas leakage? — Are piping installation points on A/C unit free of gas leakage — Perform gas leak inspection using gas leak tester. • Are above items okay?	Yes	Go to the next step.
		No	If piping or A/C component(s) is damaged or cracked, replace then go to Step 18. If there is gas leakage, repair or replace connection and replace condenser*, then go to Step 18.
8	**INSPECT EVAPORATOR PIPING CONNECTIONS IN A/C UNIT FOR GAS LEAKAGE** • Are piping connections for evaporator in A/C unit free of gas leakage?	Yes	Adjust refrigerant amount to specified level, then go to Step 18.
		No	If piping is damaged or cracked, replace then go to Step 18. If there is gas leakage, repair or replace connection and replace condenser*, then go to Step 18.
9	**CHECK TO SEE WHETHER MALFUNCTION IS IN COMPRESSOR OIL OR ELSEWHERE** • Add **20 ml {20 cc, 0.8 fl oz}** of compressor oil. • Is noise heard when racing engine?	Yes	Go to the next step.
		No	Troubleshooting completed. Explain repair to customer.
10	**CHECK TO SEE WHETHER MALFUNCTION IS IN A/C COMPRESSOR OR ELSEWHERE** • Drain compressor oil. • Is it contaminated with metal particles?	Yes	Go to the next step.
		No	Replace A/C compressor, then go to Step 18.

STEP	INSPECTION		ACTION
11	**CHECK TO SEE WHETHER MALFUNCTION IS SOMEWHERE IN A/C SYSTEM OR ELSEWHERE** • Is compressor oil whitish and mixed with water?	Yes	Replace entire A/C system (excluding heater), then go to Step 18.
		No	Go to the next step.
12	**INSPECT A/C COMPRESSOR OIL** • Is compressor oil darker than normal and contaminated with aluminum chips?	Yes	Replace A/C compressor and condenser, then go to Step 18. (Since A/C compressor may be worn and receiver/drier may be clogged, replacement of receiver/drier is necessary.)
		No	Condition is normal. Recheck malfunction symptoms.
13	**CHECK TO SEE WHETHER MALFUNCTION IS IN A/C COMPRESSOR OR ELSEWHERE** • Is noise heard immediately after A/C compressor is stopped?	Yes	Replace A/C compressor, then go to Step 18. (A/C compressor discharge valve left open)
		No	Go to the next step.
14	**INSPECT DRIVE BELT** • Inspect drive belt. (See 01–10A–3 DRIVE BELT INSPECTION [L3].) (See 01–10C–3 DRIVE BELT INSPECTION [AJ].) • Is it okay?	Yes	Go to the next step.
		No	Adjust or replace drive belt, then go to Step 18.
15	**INSPECT DRIVE BELT CONDITION** • Is drive belt worn? • Does it have foreign material imbedded in it, or have oil on it?	Yes	Remove obstruction, remove oil, or replace drive belt, then go to Step 18.
		No	Go to the next step.
16	**INSPECT MAGNETIC CLUTCH** • Inspect magnetic clutch. (See 07–40–20 MAGNETIC CLUTCH INSPECTION [L3, AJ].) • Is it okay?	Yes	Replace A/C compressor (excluding pressure plate, A/C compressor pulley, and stator), then go to Step 18.
		No	Replace magnetic clutch, then go to Step 18.
17	**CHECK TO SEE WHETHER MALFUNCTION IS IN A/C COMPRESSOR OR REFRIGERANT LINES** • Is noise emitted from A/C compressor?	Yes	Visually inspect A/C compressor, replace appropriate parts if necessary, then go to the next step.
		No	If noise is due to refrigerant lines, repair detached or missing clips, tighten loose bolts, then go to the next step.
18	**VERIFY THAT MALFUNCTION SYMPTOM OCCURS AFTER REPAIR** • Has A/C compressor noise stopped?	Yes	Troubleshooting completed. Explain repairs to customer.
		No	Recheck malfunction symptoms, then repeat from Step 1 if malfunction recurs.

* : If there is gas leakage, air enters into the A/C system. The desiccant within the receiver/drier absorbs the moisture from the air and becomes saturated. If the A/C system is used in this condition, the inside of the A/C compressor will begin to rust due to this moisture, which may cause lock up or noise to occur. Therefore, replacement of the receiver/drier is necessary.

07–10 REFRIGERANT SYSTEM

REFRIGERANT SYSTEM SERVICE WARNINGS 07–10–1
Using/Handling Unapproved Refrigerant 07–10–1
Handling Refrigerant 07–10–1
Storing Refrigerant 07–10–1
REFRIGERANT SYSTEM SERVICE CAUTIONS [L3, AJ] 07–10–2
Handling Compressor Oil 07–10–2
REFRIGERANT SYSTEM SERVICE CAUTIONS [L3 WITH TC] 07–10–2
Handling Insufficient Refrigerant Level 07–10–2
Handling Compressor Oil 07–10–2
REFRIGERANT SYSTEM GENERAL PROCEDURES 07–10–3
Manifold Gauge Set Installation 07–10–3
REFRIGERANT SYSTEM PERFORMANCE TEST [L3, AJ] 07–10–3
REFRIGERANT SYSTEM PERFORMANCE TEST [L3 WITH TC] 07–10–4
REFRIGERANT PRESSURE CHECK [L3, AJ] 07–10–4
REFRIGERANT PRESSURE CHECK [L3 WITH TC] 07–10–5
REFRIGERANT RECOVERY 07–10–5
REFRIGERANT CHARGING [L3, AJ] 07–10–5
Charging Recycled R-134a Refrigerant 07–10–5
Charging New R-134a Refrigerant 07–10–6
REFRIGERANT CHARGING [L3 WITH TC] 07–10–8
Charging Recycled R-134a Refrigerant 07–10–8
Charging Preparation 07–10–8
Evacuation 07–10–9
Airtightness Check 07–10–9
Charging New R-134a Refrigerant 07–10–9
Leak Test 07–10–11

REFRIGERANT SYSTEM SERVICE WARNINGS

E6U071000000W01

Using/Handling Unapproved Refrigerant

- **Using a flammable refrigerant, such as OZ-12, in this vehicle is dangerous. In an accident, the refrigerant may catch fire, resulting in serious injury or death. When servicing this vehicle, use only R-134a.**
- **Checking for system leakage on a vehicle that has been serviced with flammable refrigerant, such as OZ-12, is dangerous. Conventional leak detectors use an electronically generated arc which can ignite the refrigerant, causing serious injury or death. If a flammable refrigerant may have been used to service the system, or if you suspect a flammable refrigerant has been used, contact the local fire marshal or EPA office for information on handling the refrigerant.**

Handling Refrigerant

- **Avoid breathing air conditioning refrigerant or lubricant vapor. Exposure may irritate eyes, nose and throat. Also, due to environmental concerns, use service equipment certified to meet the requirements of SAE J2210 (R-134a recycling equipment) when draining R-134a from the air conditioning system. If accidental system discharge occurs, ventilate work area before resuming service.**
- **Do not pressure test or leak test R-134a service equipment and/or vehicle air conditioning system with compressed air. Some mixtures of air and R-134a have been shown to be combustible at elevated pressures. These mixtures, if ignited, may cause injury or property damage. Additional health and safety information may be obtained from refrigerant manufacturers.**
- **Do not allow the refrigerant to leak near fire or any kind of heat. A poisonous gas may be generated if the refrigerant gas contacts fire or heat such as from cigarettes and heaters. When carrying out any operation that can cause refrigerant leakage, extinguish or remove the above-mentioned heat sources and maintain adequate ventilation.**
- **Handling liquid refrigerant is dangerous. A drop of it on the skin can result in localized frostbite. When handling the refrigerant, wear gloves and safety goggles. If refrigerant splashes into the eyes, immediately wash them with clean water and consult a doctor.**

Storing Refrigerant

- **The refrigerant container is highly pressurized. If it is subjected to high heat, it could explode, scattering metal fragments and liquid refrigerant that can seriously injure you. Store the refrigerant at temperatures below 40°C {104°F}.**

REFRIGERANT SYSTEM SERVICE CAUTIONS [L3, AJ]

E6U071000000W02

Handling Compressor Oil

- **Use only ZXL 100PG compressor oil for this vehicle. Using PAG oil other than ZXL 100PG compressor oil can damage the A/C compressor.**
- **Do not spill ZXL 100PG compressor oil on the vehicle. A drop of compressor oil on the vehicle surface can eat away at the paint. If oil gets on the vehicle, wipe it off immediately.**
- **ZXL 100PG compressor oil (PAG oil) has a higher moisture absorption efficiency than the previously used mineral oil. If moisture mixes with the compressor oil, the refrigerant system could be damaged. Therefore, install caps immediately after using the compressor oil or removing refrigerant system parts to prevent moisture absorption.**

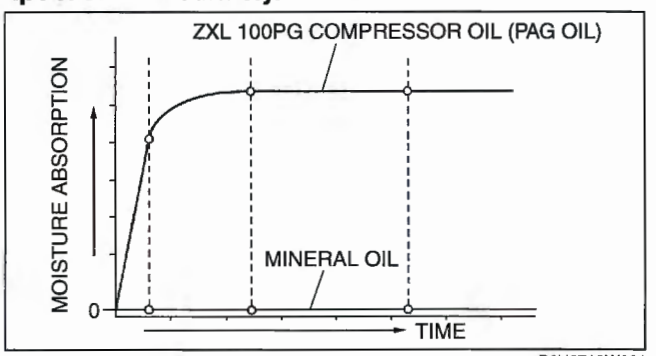

B6U0710W001

REFRIGERANT SYSTEM SERVICE CAUTIONS [L3 WITH TC]

E6U071000000W05

Handling Insufficient Refrigerant Level

- **If an insufficient refrigerant level is detected at troubleshooting, do not charge (add) the refrigerant. Because an accurate amount of refrigerant cannot be determined from the pressure indicated on the manifold gauge, never charge the refrigerant. If there is too much or too little refrigerant from the refilling, there may be secondary problems such as damage to the refrigerant cycle parts, or a decrease of cooling performance. Therefore, if it is determined that the refrigerant level is insufficient, completely remove refrigerant from the refrigerant cycle and refill with refrigerant to the specified amount.**

Handling Compressor Oil

- **Use only ATMOS GU10 compressor oil for this vehicle. Using a PAG oil other than ATMOS GU10 compressor oil can damage the A/C compressor.**
- **Do not spill ATMOS GU10 compressor oil on the vehicle. A drop of compressor oil on the vehicle surface can eat away at the paint. If oil gets on the vehicle, wipe it off immediately.**
- **ATMOS GU10 compressor oil (PAG oil) has a higher moisture absorption efficiency than the previously used mineral oil. If moisture mixes with the compressor oil, the refrigerant system could be damaged. Therefore, install caps immediately after using the compressor oil or removing refrigerant system parts to prevent moisture absorption.**
- **If the refrigerant gas is completely discharged from the system for reasons such as a malfunction during A/C operation, repair or replace the malfunctioning part, charge the refrigerant to the specified amount and always add 60 ml {60 cc, 2.03 fl oz} of compressor. If the compressor oil is not adequately replenished, the A/C compressor may quickly deteriorate, abnormal noise may develop, cooling performance may be affected or, in the worst case, the A/C compressor may seize.**

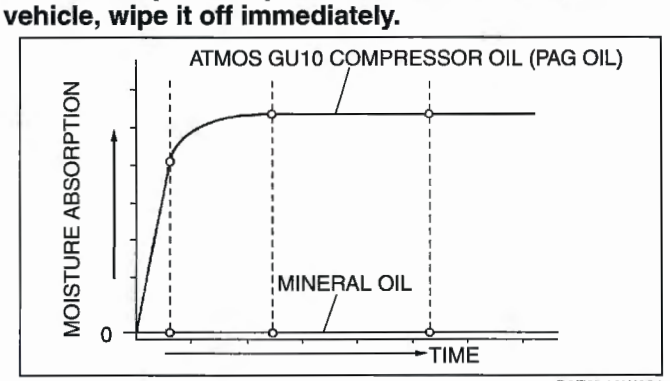

B3E0710W001

REFRIGERANT SYSTEM GENERAL PROCEDURES

E6U071000000W03

Manifold Gauge Set Installation

1. Fully close the valves of the manifold gauge. Connect the charging hoses to the high and low-pressure side joints of the manifold gauge.
3. Connect the quick couplers to the ends of the charging hoses.
4. Connect the quick couplers to the charging valves.

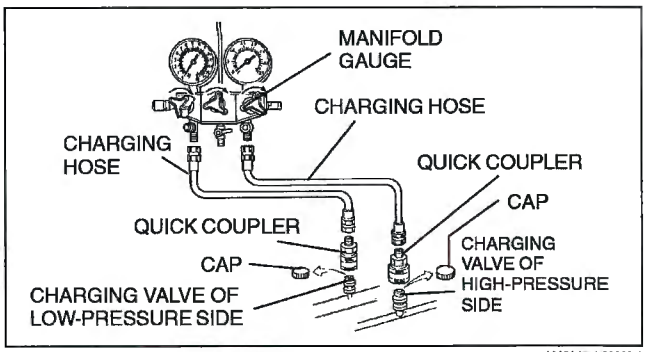

W6U710WA1

REFRIGERANT SYSTEM PERFORMANCE TEST [L3, AJ]

E6U071000000W04

1. Perform refrigerant pressure check. (See 07–10–4 REFRIGERANT PRESSURE CHECK [L3, AJ].)
   - If not as specified, troubleshoot refrigerant system. (See 07–03–5 TROUBLESHOOTING INDEX [L3, AJ].)
   - If they are correct, go to next step.
2. Place a dry-bulb thermometer in the driver-side center ventilator outlet.
3. Open the hood.
4. Warm up the engine and run it at a constant **1,500 rpm.**
5. Set the fan switch to 4th speed.
6. Turn the A/C switch on.
7. Set the RECIRCULATE mode.
8. Set the temperature control to MAX COLD.
9. Set the VENT mode.
10. Close all the doors and all the windows.
11. Wait until the center ventilator temperature stabilizes. The output temperature is stable when the A/C compressor is repeatedly turned on and off based on the A/C compressor control of evaporator temperature sensor.
12. Measure the center ventilator temperature.
13. Measure the ambient temperature.
14. Verify that the intersection of the center ventilator temperature and the ambient temperature is in the shaded zone.
    - If not as specified, troubleshoot the refrigerant system. (See 07–03–5 TROUBLESHOOTING INDEX [L3, AJ].)

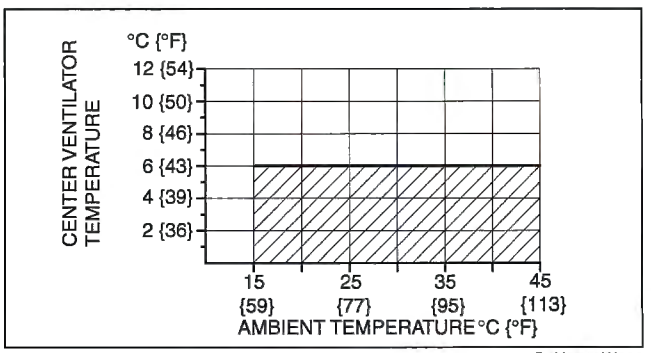

B6U0710W003

07–10

REFRIGERANT SYSTEM PERFORMANCE TEST [L3 WITH TC]

E6U071000000W06

1. Inspect the refrigerant pressure. (See 07–10–5 REFRIGERANT PRESSURE CHECK [L3 WITH TC].)
2. Place a dry-bulb thermometer in the driver-side center ventilator outlet.
3. Start the engine and after it is warmed up, run it at a constant **1,500 rpm**.
4. Set the fan speed to MAX HI.
5. Turn the A/C switch on.
6. Set to RECIRCULATE mode.
7. Set the temperature control to MAX COLD.
8. Set to VENT mode.
9. Close all the doors and windows.
10. Wait until the air conditioner output temperature stabilizes.
    Stabilized condition
    - The A/C compressor repeatedly turns on and off at regular intervals.
11. After the blower air is stabilized, read the dry-bulb thermometer.
12. Verify the ambient temperature.
13. Verify that the temperature reading is in the shaded zone.
    - If the there is any malfunction, inspect the refrigerant system according to the troubleshooting chart.

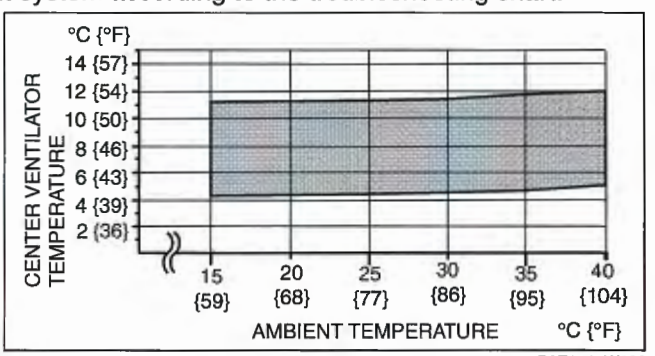

B3E0710W006

REFRIGERANT PRESSURE CHECK [L3, AJ]

E6U071078834

1. Install the manifold gauge set.
2. Warm up the engine and run it at a constant **1,500 rpm**.
3. Set the fan switch to 4th speed.
4. Turn the A/C switch on.
5. Set the RECIRCULATE mode.
6. Set the temperature control to MAX COLD.
7. Set the VENT mode.
8. Close all the doors and all the windows.
9. Measure the ambient temperature and the high and low-pressure side reading of the manifold gauge.
10. Verify that the intersection of the pressure reading of the manifold gauge and ambient temperature is in the shaded zone.
    - If not as specified, troubleshoot the refrigerant system. (See 07–03–5 TROUBLESHOOTING INDEX [L3, AJ].)

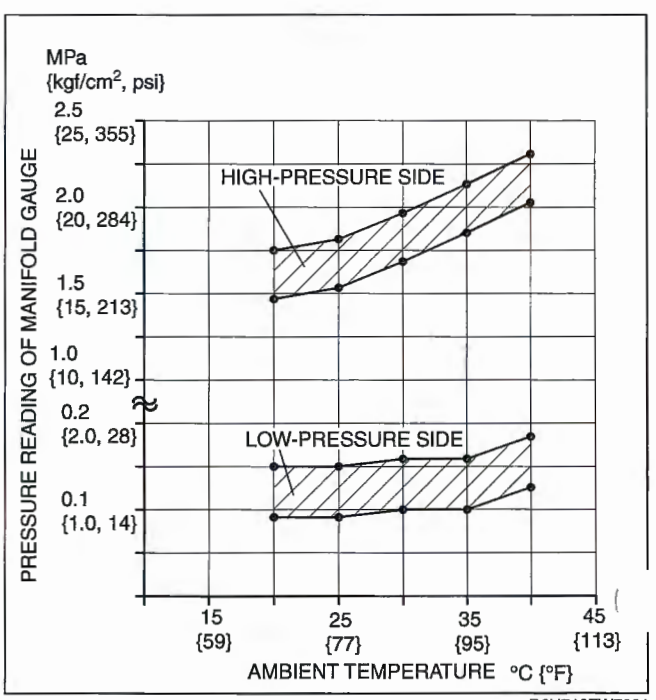

D6U710ZW7001

REFRIGERANT PRESSURE CHECK [L3 WITH TC]

E6U071078834W04

1. Connect the manifold gauge. (See 07–10–3 REFRIGERANT SYSTEM GENERAL PROCEDURES.)
2. Start the engine and after it is warmed up, run it at a constant **1,500 rpm**.
   Set the fan speed MAX HI.
3. Turn the A/C switch on.
5. Set to RECIRCULATE mode.
6. Set the temperature control to MAX COLD.
7. Set to VENT mode.
8. Close all the doors and all the windows.
9. Measure the ambient temperature and high- and low- pressure side reading of the manifold gauge.
10. Verify that the intersection of the pressure reading of the manifold gauge and ambient temperature is in the shaded zone.
    - If there is any malfunction, inspect the refrigerant system according to the troubleshooting chart.

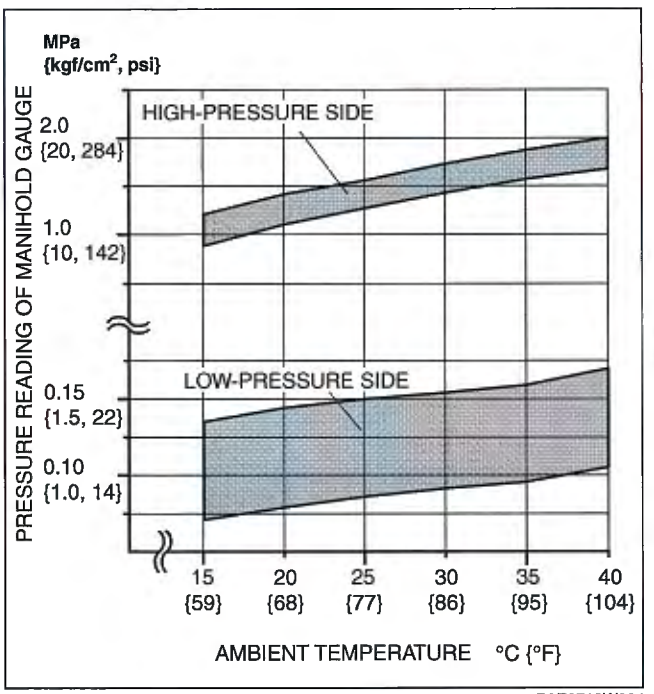

B3E0710W004

07–10

REFRIGERANT RECOVERY

E6U071078834W02

Warning

- **Avoid breathing air conditioning refrigerant or lubricant vapor. Exposure may irritate eyes, nose and throat. Also, due to environmental concerns, use service equipment certified to meet the requirements of SAE J2210 (R-134a recycling equipment) when draining R-134a from the air conditioning system. If accidental system discharge occurs, ventilate work area before resuming service.**

1. Connect an R-134a recovery/recycling/recharging device to the vehicle and follow the device manufacturer's instructions.

REFRIGERANT CHARGING [L3, AJ]

E6U071078834W03

Warning

- **Avoid breathing air conditioning refrigerant or lubricant vapor. Exposure may irritate eyes, nose and throat. Also, due to environmental concerns, use service equipment certified to meet the requirements of SAE J2210 (R-134a recycling equipment) when draining R-134a from the air conditioning system. If accidental system discharge occurs, ventilate work area before resuming service.**

Caution

- **Do not exceed the specification when charging the system with refrigerant. Doing so will decrease the efficiency of the air conditioner or damage the refrigeration cycle parts.**

Charging Recycled R-134a Refrigerant

1. Connect an R-134a recovery/recycling/recharging device to the vehicle and follow the device manufacturer's instructions.

Charging New R-134a Refrigerant

1. Install the manifold gauge set.
2. Connect the tap pin side of the charging hose to the air purge valve of the manifold gauge.
3. Connect the vacuum pump hose to the center joint of the manifold gauge.
4. Connect the vacuum pump hose to the vacuum pump.
5. Connect the charging hose to the refrigerant tank.
6. Place the refrigerant tank on the scale.

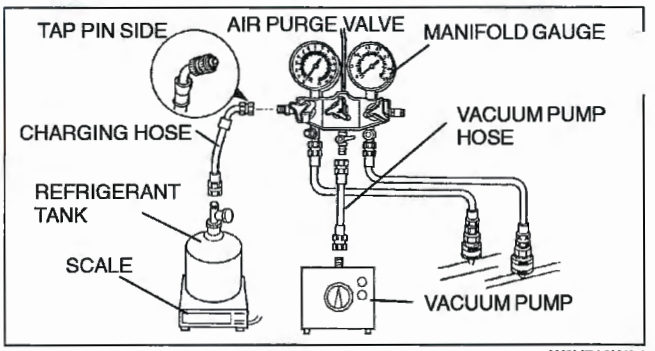

W6U710WA4

7. Open all the valves of the manifold gauge.

Caution

- **Close the manifold gauge valve immediately after stopping the vacuum pump. If the valve is left open, the vacuum pump oil will back flow into the refrigeration cycle and cause a decrease in the efficiency of the air conditioner.**

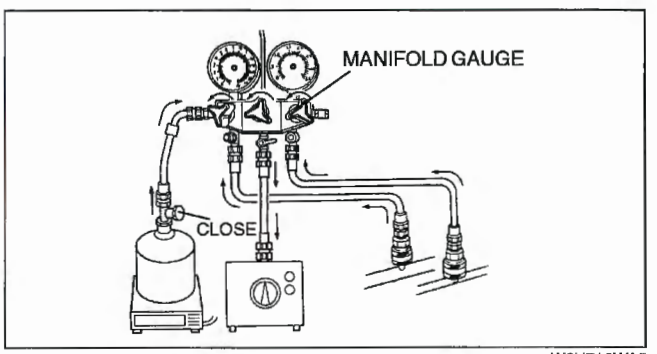

W6U710WA5

8. Start the vacuum pump and let it operate for **15 min**.
9. Verify that high and low-pressure side readings of the manifold gauge are at **–101 kPa {–760 mmHg, –29.9 inHg}**. Close each valve of the manifold gauge.
10. Stop the vacuum pump and wait for **5 min**.
11. Inspect the high and low-pressure side readings of the manifold gauge.
    - If the reading has changed, inspect for leakage and then repeat from Step 7.
    - If the reading has not changed, go to next step.
12. Open the valve of the refrigerant tank.
13. Weigh the refrigerant tank to charge the suitable amount of refrigerant.

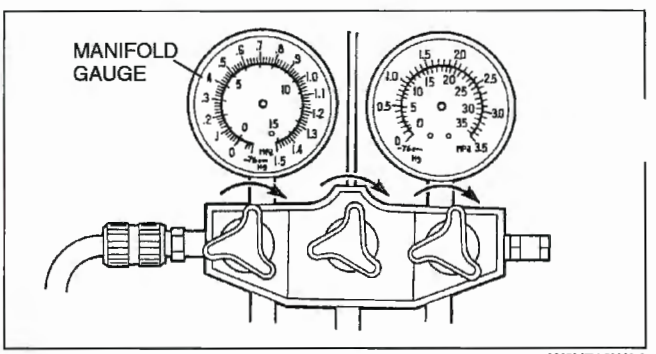

W6U710WAA

Regular amount of refrigerant (approx. quantity)
475 g {16.8 oz}

Warning

- **If the refrigerant system is charged with a large amount of refrigerant when checking for gas leakage, and if any leakage should occur, the refrigerant will be released into the atmosphere. In order to prevent the accidental release of refrigerant which can destroy the ozone layer in the stratosphere, follow the proper procedures and charge with only a small amount of refrigerant when checking for gas leakage.**
- **If charging the system with refrigerant by service cans or refrigerant tank, running the engine with the high-pressure side valve open is dangerous. Pressure within the service cans or refrigerant tank will increase and they could explode, scattering metal fragments and liquid refrigerant that can seriously injure you. Therefore, do not open the high-pressure side valve while the engine is running.**

14. Open the low-pressure side valve of the manifold gauge.

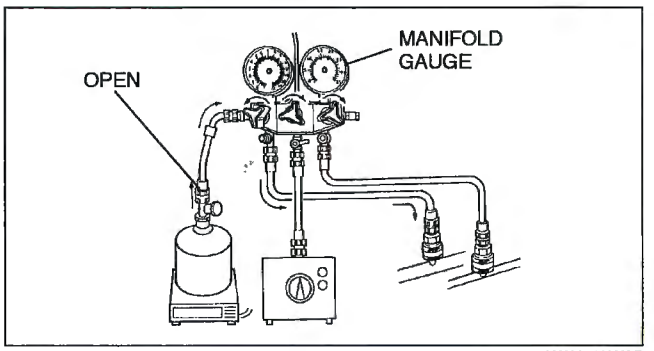

W6U710WAB

15. When the high-pressure side reading increases to **98 kPa {1.0 kgf/cm^2, 14 psi}**, close the low-pressure side valve of the manifold gauge.
16. Inspect for leakage from the cooler pipe/hose connections using a gas leak tester.
    - If there is no leakage, go to Step 18.
    - If leakage is found at a loose joint, tighten the joint, go to next step.
17. Inspect for leakage again.
    - If there is no leakage after tightening the joint, go to next step.
    - If there is still a leakage at the same joint, discharge the refrigerant and then repair the joint. Repeat the charging procedure from Step 7.

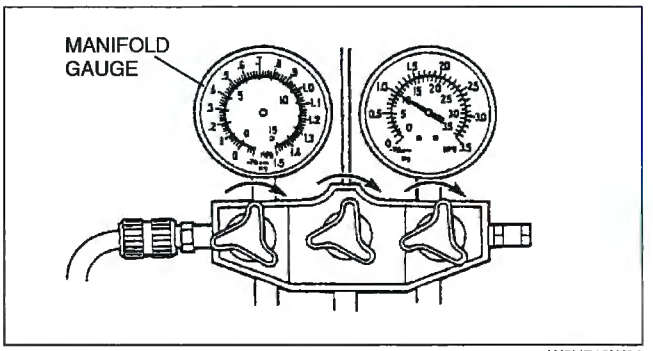

W6U710WA8

Warning

- **If charging the system with refrigerant by service cans or refrigerant tank, running the engine with the high-pressure side valve open is dangerous. Pressure within the service cans or refrigerant tank will increase and they could explode, scattering metal fragments and liquid refrigerant that can seriously injure you. Therefore, do not open the high-pressure side valve while the engine is running.**

18. Open the low-pressure side valve of the manifold gauge and charge with refrigerant until the weight of refrigerant tank has decreased **250 g {8.83 oz}** from the amount in Step 13.

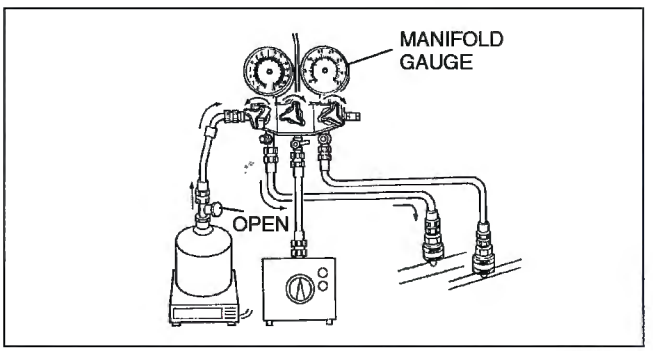

W6U710WA9

19. Close the low-pressure side valve of the manifold gauge.

Warning

- **If charging the system with refrigerant by service cans or refrigerant tank, running the engine with the high-pressure side valve open is dangerous. Pressure within the service cans or refrigerant tank will increase and they could explode, scattering metal fragments and liquid refrigerant that can seriously injure you. Therefore, do not open the high-pressure side valve while the engine is running.**

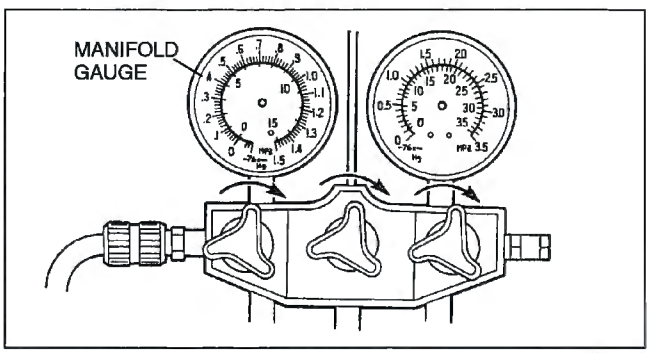

W6U710WAA

20. Start the engine and actuate the A/C compressor.

21. Open the low-pressure side valve of the manifold gauge and charge with refrigerant until the weight of the refrigerant tank has decreased **475 g {16.8 oz}** from the amount in Step 13.
22. Close the low-pressure side valve of the manifold gauge and the valve of the refrigerant tank.
23. Stop the engine and A/C compressor.
24. Inspect for leakage using a gas leak tester.
    - If there is no leakage, go to Step 26.
    - If leakage is found at a loose joint, tighten the joint, then go to next step.
25. Inspect for leakage again.
    - If there is still leakage after tightening the joint, go to next step.
    - If there is still leakage at the same joint, discharge the refrigerant and then repair the joint. Repeat the charging procedure from Step 7.
26. Remove the manifold gauge set.
27. Install the caps to the charging valves.

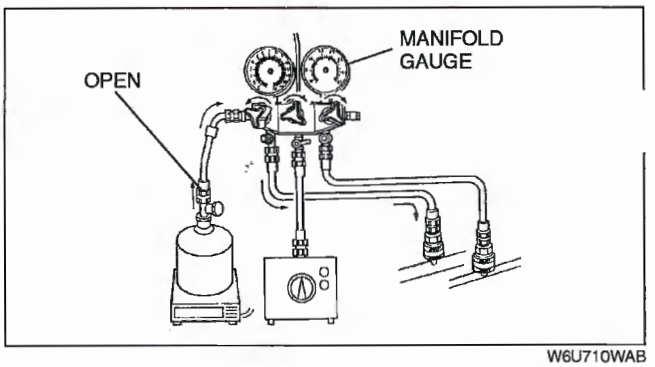

W6U710WAB

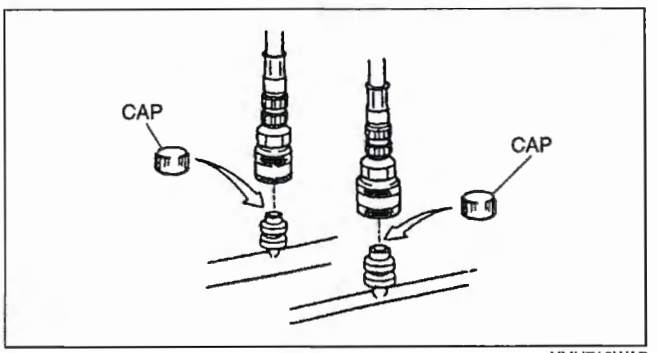

YMU710WA7

REFRIGERANT CHARGING [L3 WITH TC]

E6U071078834W0E

Caution
- **Do not exceed the specification when charging the system with refrigerant. Doing so will decrease the efficiency of the air conditioner or damage the refrigeration cycle parts.**

Charging Recycled R-134a Refrigerant

1. Connect an R-134a recovery/recycling/recharging device to the vehicle and follow the device manufacturer's instructions.

Charging Preparation

1. Install the manifold gauge set.
2. Connect the tap pin side of the charging hose to the air purge valve of the manifold gauge.
3. Connect the vacuum pump hose to the center joint of the manifold gauge.
4. Connect the vacuum pump hose to the vacuum pump.
5. Connect the charging hose to the refrigerant tank.
6. Place the refrigerant tank on the scale.

Regular amount of refrigerant (approx. quantity)
470 g {16.6 oz}

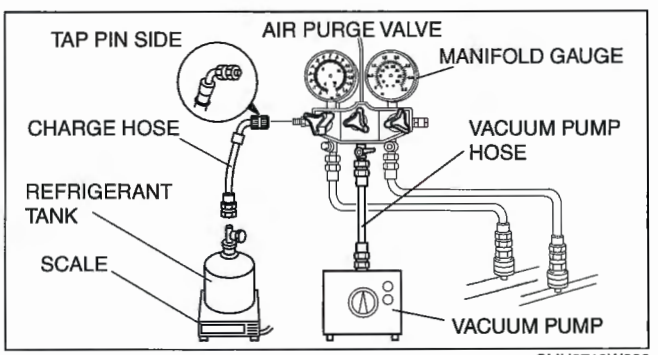

CMU0710W002

Evacuation

1. Open all the valves of the manifold gauge.

Caution

- **Close the manifold gauge valve immediately after stopping the vacuum pump. If the valve is left open, the vacuum pump oil will flow back into the refrigeration cycle and cause a decrease in the efficiency of the air conditioner.**

2. Start the vacuum pump and let it operate for **15 min**.

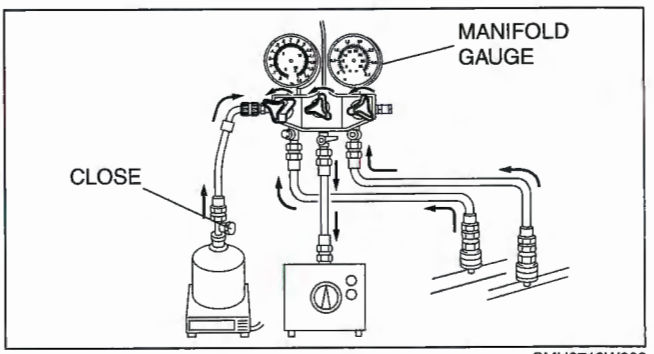

CMU0710W003

3. Verify that high- and low-pressure side readings of the manifold gauge are at **–101 kPa {–760 mmHg, –29.9 inHg}**. Close each valve of the manifold gauge.

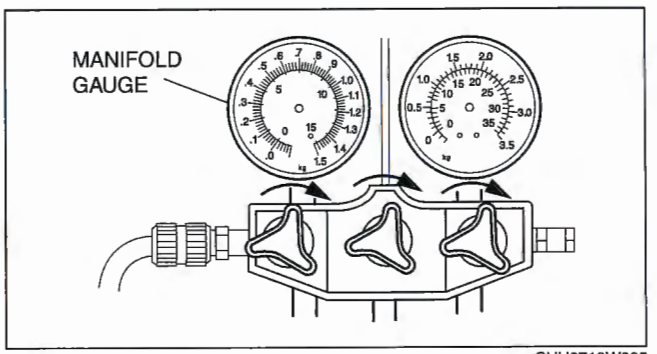

CHU0710W005

07–10

Airtightness Check

1. Stop the vacuum pump and wait for **5 min**.
2. Check the high- and low-pressure side readings of the manifold gauge.
   - If the reading has changed, inspect for leakage and go to Evacuation. (See 07–10–9 Evacuation.)
   - If the reading has not changed, go to Charging New R-134a Refrigerant. (See 07–10–9 Charging New R-134a Refrigerant.)

Charging New R-134a Refrigerant

1. Open the valve of the refrigerant tank.
2. Weigh the refrigerant tank to charge the suitable amount of refrigerant.

Warning

- **If the refrigerant system is charged with a large amount of refrigerant when inspecting for gas leakage, and if any leakage should occur, the refrigerant will be released into the atmosphere. In order to prevent the accidental release of refrigerant which can destroy the ozone layer in the stratosphere, follow the proper procedures and charge with only a small amount of refrigerant when inspecting for gas leakage.**
- **If charging the system with refrigerant using service cans, running the engine with the high-pressure side valve open is dangerous. Pressure within the service cans will increase and the cans could explode, scattering metal fragments and liquid refrigerant that can seriously injure you. Therefore, do not open the high-pressure side valve while the engine is running.**

Caution

- **Always being charging of refrigerant from the high-pressure side. If changing is begun from the low-pressure side, the vanes of the A/C compressor will not be released and abnormal noise may result.**

3. Open the high-pressure side valve of the manifold gauge.

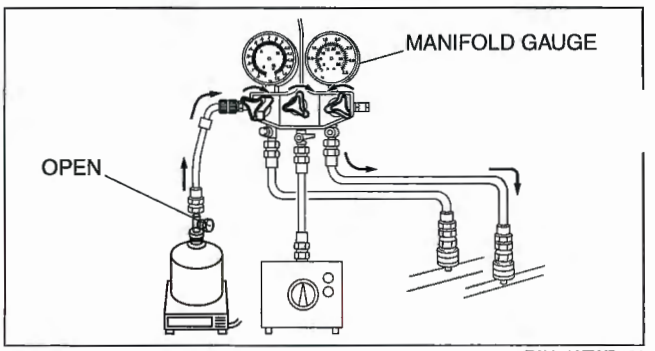

E6U710ZWB101

4. When the low-pressure side reading increases to **0.098 MPa {1.0 kgf/cm^2, 14 psi}**, close the high-pressure side valve of the manifold gauge.
5. Inspect for leakage from the cooler pipe/hose connections using a gas leak tester.
   - If there is no leakage, go to Step 7.
   - If leakage is found at a loose joint, tighten the joint, then go to the next step.
6. Inspect for leakage again.
   - If there is no leakage after tightening the joint, go to the next step.
   - If there is still a leakage at the same joint, discharge the refrigerant and then repair the joint. Repeat the charging procedure from evacuation.

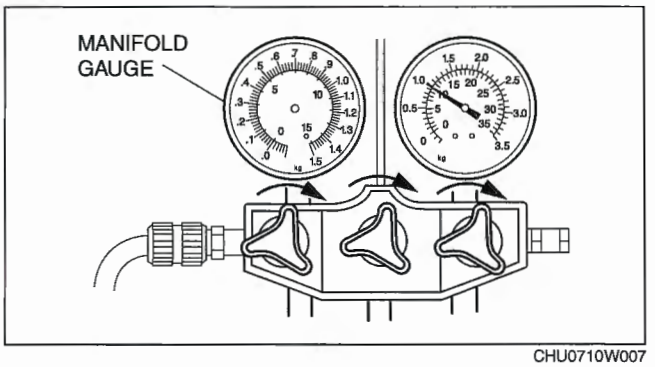

CHU0710W007

Warning
- **If charging the system with refrigerant using service cans, running the engine with the high-pressure side valve open is dangerous. Pressure within the service cans will increase and the cans could explode, scattering metal fragments and liquid refrigerant that can seriously inju you. Therefore, do not open the high-pressure side valve while the engine is running.**

7. Open the high-pressure side valve of the manifold gauge and charge with refrigerant until the weight of refrigerant tank has decreased **250 g {8.83 oz}** from the amount in Step 2.

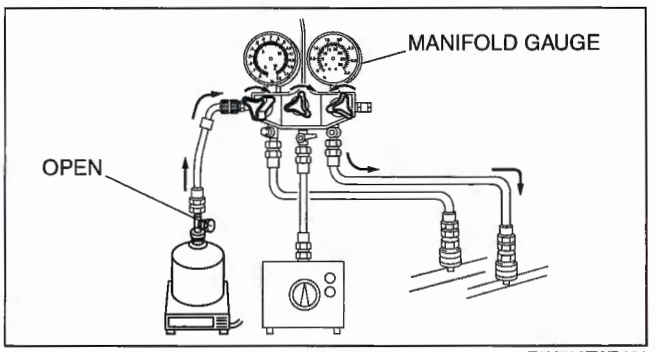

E6U710ZWB101

8. Close the low-pressure side valve of the manifold gauge.

Warning
- **If charging the system with refrigerant using service cans, running the engine with the high-pressure side valve open is dangerous. Pressure within the service cans will increase and the cans could explode, scattering metal fragments and liquid refrigerant that can seriously injure you. Therefore, do not open the high-pressure side valve while the engine is running.**

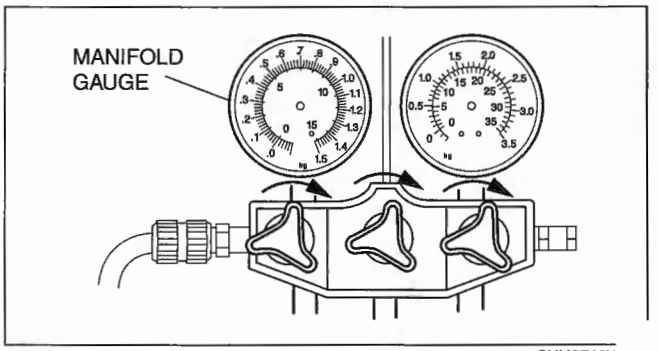

CHU0710V

9. Start the engine and actuate the A/C compressor.

10. Open the low-pressure side valve of the manifold gauge and charge with refrigerant until the weight of the refrigerant tank has decreased regular amount from the amount in Step 2.
    Close the low-pressure side valve of the manifold gauge and the valve of the refrigerant tank.
12. Stop the engine and A/C compressor.

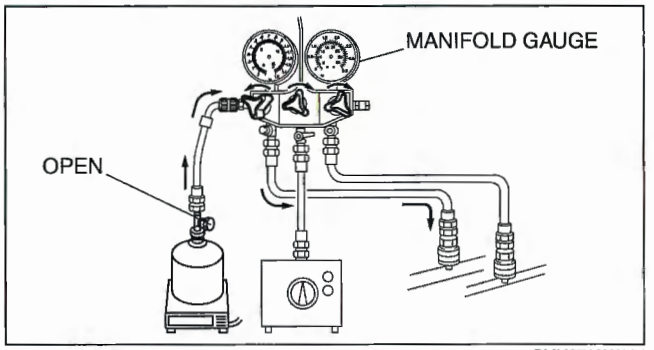

CMU0710W004

Leak Test

1. Inspect for leakage using the a gas leak tester.
   - If there is no leakage, go to Step 3.
   - If leakage is found at a loose joint, tighten the joint, then go to the next step.
2. Inspect for leakage again.
   - If there is no leakage after tightening the joint, go to the next step.
   - If there is still leakage at the same joint, discharge the refrigerant and then repair the joint. Repeat the charging procedure from evacuation.
3. Disconnect the manifold gauge from the charging valves.
4. Install the caps to the charging valves.

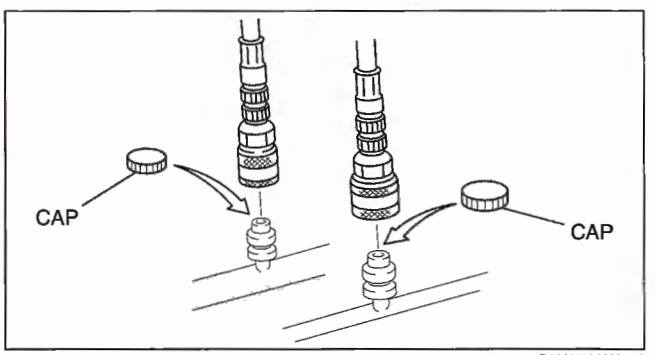

C3U0710W500

07–11 BASIC SYSTEM

BASIC SYSTEM LOCATION INDEX
3, AJ] 07–11–2
BASIC SYSTEM LOCATION INDEX
[L3 WITH TC] 07–11–3
BLOWER UNIT
REMOVAL/INSTALLATION [L3 WITH TC]07–11–3
BLOWER UNIT
DISASSEMBLY/ASSEMBLY
[L3 WITH TC] 07–11–5
A/C UNIT REMOVAL/INSTALLATION
[L3, AJ] 07–11–5
A/C Unit Installation Note..... 07–11–6
A/C UNIT REMOVAL/INSTALLATION
[L3 WITH TC] 07–11–7
A/C Unit Installation Note..... 07–11–8
A/C UNIT DISASSEMBLY/ASSEMBLY
[L3, AJ] 07–11–8
Evaporator Temperature Sensor
ssembly Note..... 07–11–9
A/C UNIT DISASSEMBLY/ASSEMBLY
[L3 WITH TC] 07–11–10
Evaporator Temperature Sensor
Assembly Note..... 07–11–11
Sensor Clamp Assembly Note..... 07–11–11
Adhesive polyurethane (2)
Assembly Note..... 07–11–11
Adhesive polyurethane (1)
Assembly Note..... 07–11–12
AIR FILTER
EMOVAL/INSTALLATION..... 07–11–12
AIR FILTER INSPECTION..... 07–11–12
EXPANSION VALVE
REMOVAL/INSTALLATION
[L3 WITH TC] 07–11–13
EVAPORATOR INSPECTION.....07–11–14
HEATER CORE INSPECTION 07–11–14
REAR HEAT DUCT
REMOVAL/INSTALLATION
[L3, AJ].....07–11–14
REAR HEAT DUCT
REMOVAL/INSTALLATION
[L3 WITH TC] 07–11–14
A/C COMPRESSOR
REMOVAL/INSTALLATION
[L3, AJ].....07–11–15
A/C Compressor Installation Note.....07–11–15
A/C COMPRESSOR
REMOVAL/INSTALLATION
[L3 WITH TC] 07–11–16
A/C Compressor Installation Note.....07–11–17
CONDENSER
REMOVAL/INSTALLATION
[L3, AJ].....07–11–17
Condenser Installation Note 07–11–18
CONDENSER REMOVAL/INSTALLATION
[L3 WITH TC] 07–11–18
Condenser Installation Note 07–11–18
CONDENSER INSPECTION 07–11–18
REFRIGERANT LINES
REMOVAL/INSTALLATION
[L3, AJ].....07–11–19
Refrigerant Lines Removal Note.....07–11–20
Refrigerant Lines Installation Note 07–11–20
REFRIGERANT LINES
REMOVAL/INSTALLATION
[L3 WITH TC] 07–11–20
Refrigerant Lines Removal Note.....07–11–22
Refrigerant Lines Installation Note 07–11–22

BASIC SYSTEM LOCATION INDEX [L3, AJ]

E6U071100000W01

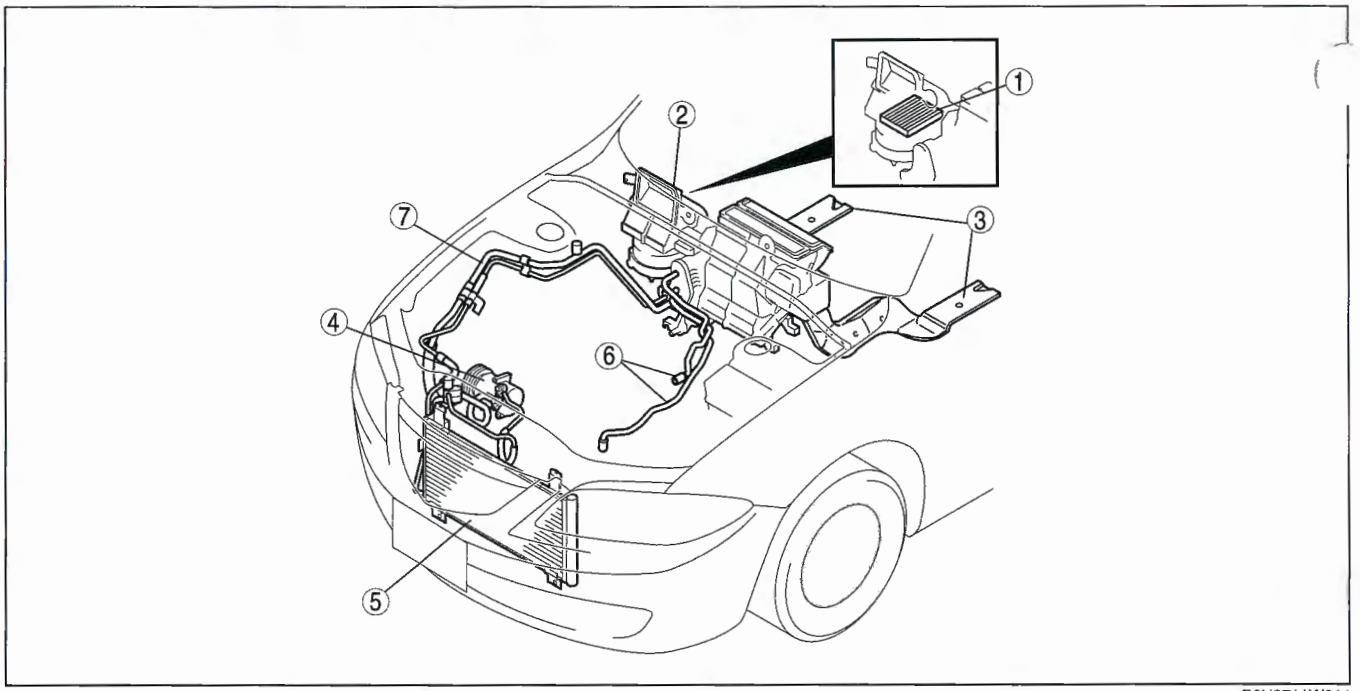

B6U0711W011

1	Air filter (See 07–11–12 AIR FILTER REMOVAL/ INSTALLATION.) (See 07–11–12 AIR FILTER INSPECTION.)
2	A/C unit (See 07–11–5 A/C UNIT REMOVAL/INSTALLATION [L3, AJ].) (See 07–11–8 A/C UNIT DISASSEMBLY/ ASSEMBLY [L3, AJ].)
3	Rear heat duct (See 07–11–14 REAR HEAT DUCT REMOVAL/ INSTALLATION [L3, AJ].)

4	A/C compressor (See 07–11–15 A/C COMPRESSOR REMOVAL/ INSTALLATION [L3, AJ].)
5	Condenser (See 07–11–17 CONDENSER REMOVAL/ INSTALLATION [L3, AJ].) (See 07–11–18 CONDENSER INSPECTION.)
6	Heater hose
7	Refrigerant lines (See 07–11–19 REFRIGERANT LINES REMOVAL/ INSTALLATION [L3, AJ].)

BASIC SYSTEM LOCATION INDEX [L3 WITH TC]

E6U071100000W02

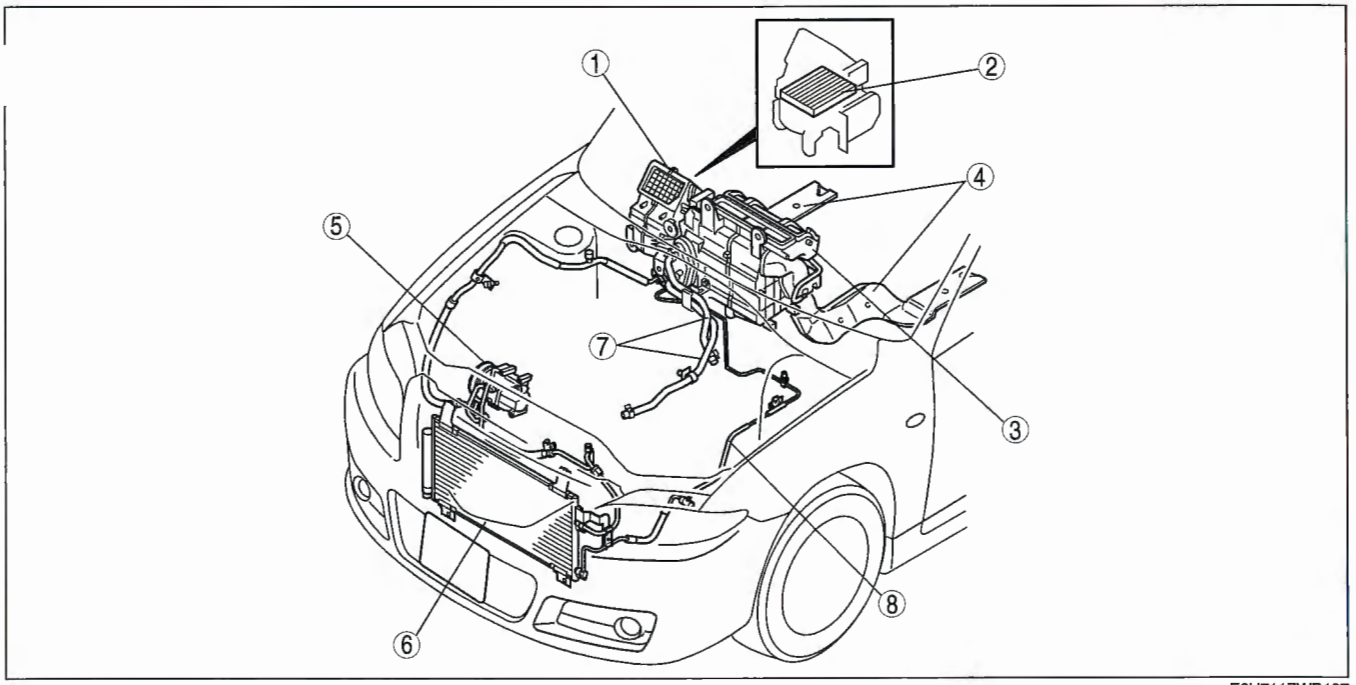

E6U711ZWB107

1	Blower unit (See 07–11–3 BLOWER UNIT REMOVAL/INSTALLATION [L3 WITH TC].) (See 07–11–5 BLOWER UNIT DISASSEMBLY/ASSEMBLY [L3 WITH TC].)
2	Air filter (See 07–11–12 AIR FILTER REMOVAL/INSTALLATION.) (See 07–11–12 AIR FILTER INSPECTION.)
3	A/C unit (See 07–11–7 A/C UNIT REMOVAL/INSTALLATION [L3 WITH TC].) (See 07–11–10 A/C UNIT DISASSEMBLY/ASSEMBLY [L3 WITH TC].)
4	Rear heat duct (See 07–11–14 REAR HEAT DUCT REMOVAL/INSTALLATION [L3 WITH TC].)
5	A/C compressor (See 07–11–16 A/C COMPRESSOR REMOVAL/INSTALLATION [L3 WITH TC].)
6	Condenser (See 07–11–18 CONDENSER REMOVAL/INSTALLATION [L3 WITH TC].) (See 07–11–18 CONDENSER INSPECTION.)
7	Heater hose
8	Refrigerant lines (See 07–11–20 REFRIGERANT LINES REMOVAL/INSTALLATION [L3 WITH TC].)

BLOWER UNIT REMOVAL/INSTALLATION [L3 WITH TC]

E6U071161140W01

1. Disconnect the negative battery cable.
2. Remove the following parts:
   (1) Glove compartment (See 09–17–9 GLOVE COMPARTMENT REMOVAL/INSTALLATION.)
   (2) Console (See 09–17–8 CONSOLE REMOVAL/INSTALLATION.)
   (3) Meter hood (See 09–17–6 METER HOOD REMOVAL/INSTALLATION.)
   (4) Instrument cluster (See 09–22–3 INSTRUMENT CLUSTER REMOVAL/INSTALLATION.)
   (5) Column cover (See 09–17–6 COLUMN COVER REMOVAL/INSTALLATION.)
   (6) Lower panel (See 09–17–7 LOWER PANEL REMOVAL/INSTALLATION.)
   (7) Steering shaft (See 06–12–7 STEERING WHEEL AND COLUMN REMOVAL/INSTALLATION.)
   (8) A-pillar trim (See 09–17–10 A-PILLAR TRIM REMOVAL/INSTALLATION.)
   (9) Front scuff plate (See 09–17–11 FRONT SCUFF PLATE REMOVAL/INSTALLATION.)
   (10)Front side trim (See 09–17–11 FRONT SIDE TRIM REMOVAL/INSTALLATION.)
   (11)Side panel (See 09–17–6 SIDE PANEL REMOVAL/INSTALLATION.)
   Remove the dashboard. (See 09–17–4 DASHBOARD REMOVAL/INSTALLATION.)
   Remove the blower motor. (See 07–40–14 BLOWER MOTOR REMOVAL/INSTALLATION.)
5. Remove the power MOS FET. (See 07–40–16 POWER METAL OXIDE SEMICONDUCTOR FIELD EFFECT TRANSISTOR (POWER MOS FET) REMOVAL/INSTALLATION [L3 WITH TC].)
6. Remove the blower unit nuts.

7. Remove the screw securing the duct (2) to the A/C unit, by inserting a phillips screwdriver into the hole made after removing the blower motor.
8. Remove the screw securing the duct (2) to the A/C unit.
9. Remove the duct (2).

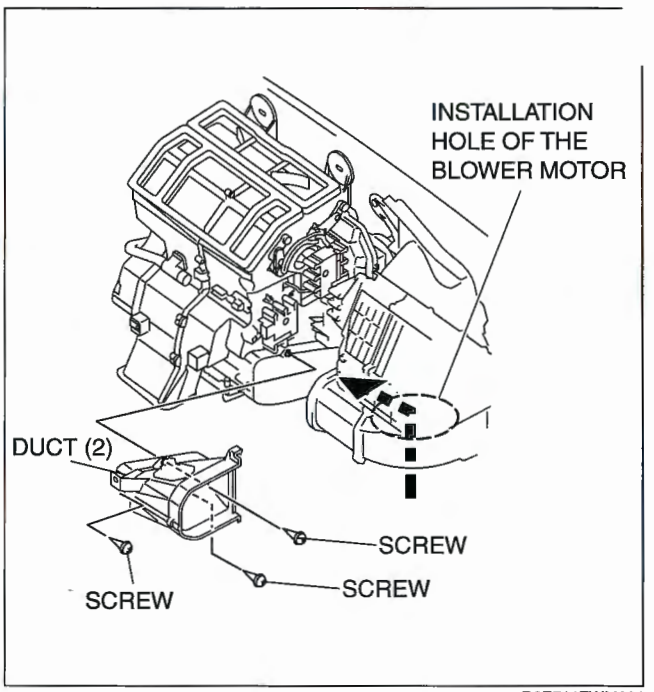

D6E711ZWM001

10. Remove the blower unit.
11. Temporary install the blower unit.
12. Install in the duct (2).
13. Install the two outer screws, securing the duct (2) to the A/C unit.

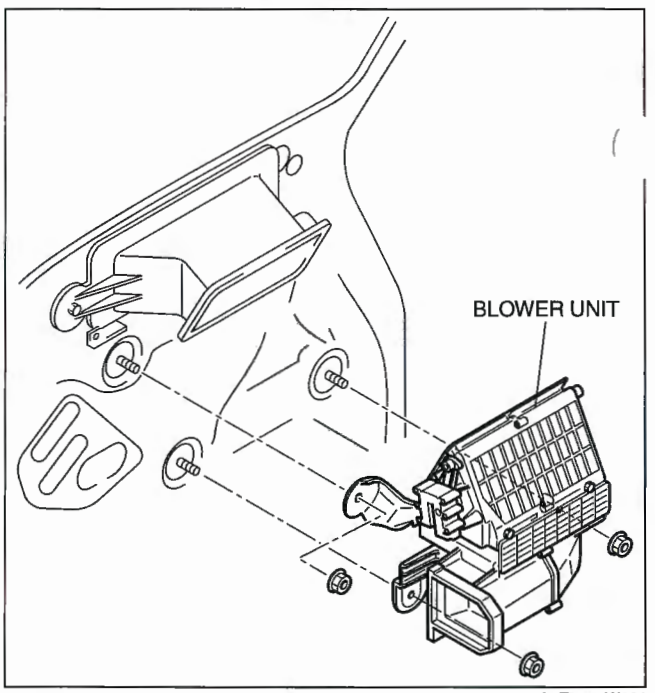

A6E8516W001

14. Install the screw on the end of the phillips screwdriver with the packing tape.

Caution

- **If the packing tape remains in the duct (2), it may become a source of noise. Wind up the packing tape to prevent pinching when tightening the screw.**

15. Install the duct (2) to the A/C unit by inserting a phillips screwdriver, with the screw, into the hole made after removing the blower motor.

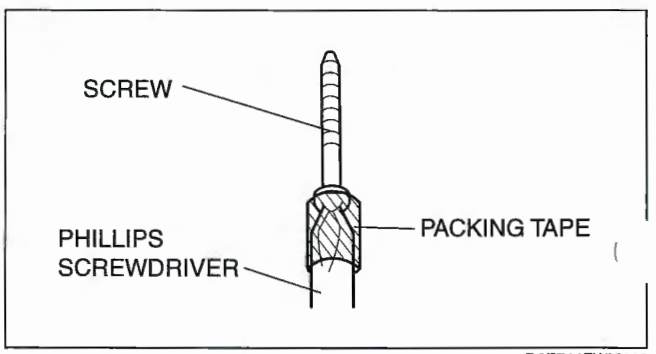

D6E711ZWM010

16. Pull out the phillips screwdriver together with the packing tape.
17. Install the blower unit nuts.
18. Install the power MOS FET. (See 07–40–16 POWER METAL OXIDE SEMICONDUCTOR FIELD EFFECT TRANSISTOR (POWER MOS FET) REMOVAL/INSTALLATION [L3 WITH TC].)
    Install the blower motor. (See 07–40–14 BLOWER MOTOR REMOVAL/INSTALLATION.)
20. Install the dashboard. (See 09–17–4 DASHBOARD REMOVAL/INSTALLATION.)
21. Connect the negative battery cable.

BLOWER UNIT DISASSEMBLY/ASSEMBLY [L3 WITH TC]

E6U071161140W02

1. Disassemble in the order indicated in the table.

Caution
- **Apply only the specified grease to the link. Otherwise abnormal noise or improper operation may result.**

1	Air filter cover
2	Air filter
3	Blower motor
4	Air intake actuator
5	Air intake crank
6	Air intake door
7	Polyurethane protector
8	Blower case (1)
9	Blower case (2)

2. Assemble in the reverse order of disassembly.

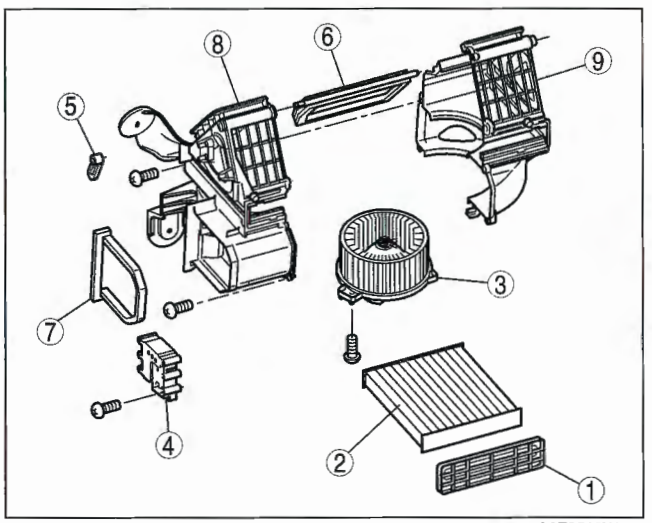

A6E8516W002

A/C UNIT REMOVAL/INSTALLATION [L3, AJ]

E6U071161130W01

1. Disconnect the negative battery cable.
2. Discharge the refrigerant from the system. (See 07–10–5 REFRIGERANT CHARGING [L3, AJ].)
3. Drain the engine coolant. (See 01–12A–5 ENGINE COOLANT REPLACEMENT [L3, AJ].)
4. Remove the dynamic chamber.
5. Remove the dashboard. (See 09–17–4 DASHBOARD REMOVAL/INSTALLATION.)

Caution
- **If moisture or foreign material enters the refrigeration cycle, cooling ability will be lowered and abnormal noise will occur. Always immediately plug open fittings after removing any refrigeration cycle parts to keep moisture or foreign material out of the cycle.**

6. Remove in the order indicated in the table. Do not allow compressor oil to spill.

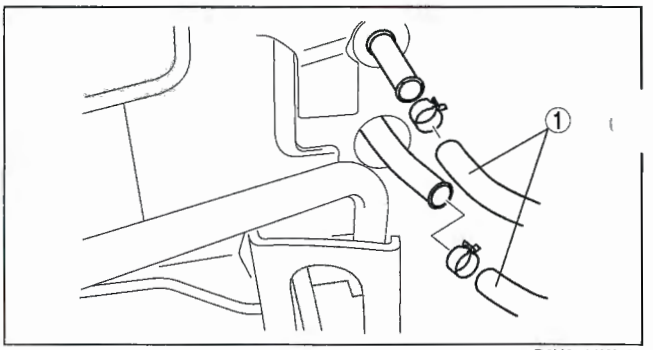

B6U0711W005

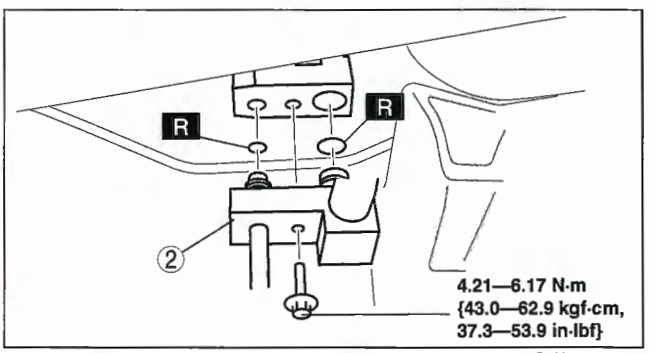

C6U0711W101

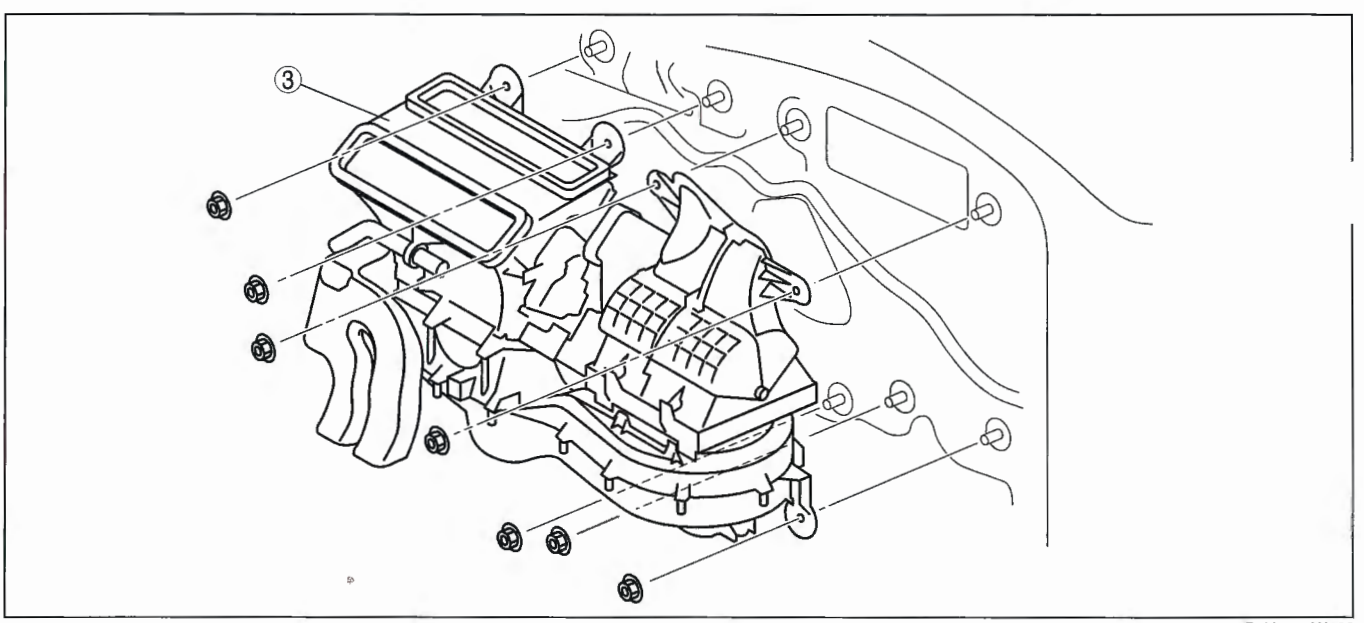

B6U0711W003

1	Heater hose
2	Cooler pipe No.2 (See 07–11–20 Refrigerant Lines Removal Note.) (See 07–11–20 Refrigerant Lines Installation Note.)
3	A/C unit (See 07–11–6 A/C Unit Installation Note.)

7. Install in the reverse order of removal.
8. Perform the refrigerant system performance test. (See 07–10–3 REFRIGERANT SYSTEM PERFORMANCE TEST [L3, AJ].)

A/C Unit Installation Note

1. When installing a new A/C unit or evaporator, add a supplemental amount of ZXL100PG compressor oil into t refrigerant cycle.

Supplemental amount (approx. quantity)
50 ml {50 cc, 1.6 fl oz}

A/C UNIT REMOVAL/INSTALLATION [L3 WITH TC]

E6U071161130W05

1. Disconnect the negative battery cable.
2. Discharge the refrigerant from the system. (See 07–10–5 REFRIGERANT RECOVERY.) (See 07–10–8 REFRIGERANT CHARGING [L3 WITH TC].)
3. Drain the engine coolant. (See 01–12B–4 ENGINE COOLANT REPLACEMENT [L3 WITH TC].)
4. Remove the following parts:
   (1) Glove compartment (See 09–17–9 GLOVE COMPARTMENT REMOVAL/INSTALLATION.)
   (2) Console (See 09–17–8 CONSOLE REMOVAL/INSTALLATION.)
   (3) Meter hood (See 09–17–6 METER HOOD REMOVAL/INSTALLATION.)
   (4) Instrument cluster (See 09–22–3 INSTRUMENT CLUSTER REMOVAL/INSTALLATION.)
   (5) Column cover (See 09–17–6 COLUMN COVER REMOVAL/INSTALLATION.)
   (6) Lower panel (See 09–17–7 LOWER PANEL REMOVAL/INSTALLATION.)
   (7) Steering shaft (See 06–12–7 STEERING WHEEL AND COLUMN REMOVAL/INSTALLATION.)
   (8) A-pillar trim (See 09–17–10 A-PILLAR TRIM REMOVAL/INSTALLATION.)
   (9) Front scuff plate (See 09–17–11 FRONT SCUFF PLATE REMOVAL/INSTALLATION.)
   (10)Front side trim (See 09–17–11 FRONT SIDE TRIM REMOVAL/INSTALLATION.)
   (11)Side panel (See 09–17–6 SIDE PANEL REMOVAL/INSTALLATION.)
5. Remove the dashboard. (See 09–17–4 DASHBOARD REMOVAL/INSTALLATION.)
6. Remove in the order indicated in the table. Do not allow compressor oil to spill.

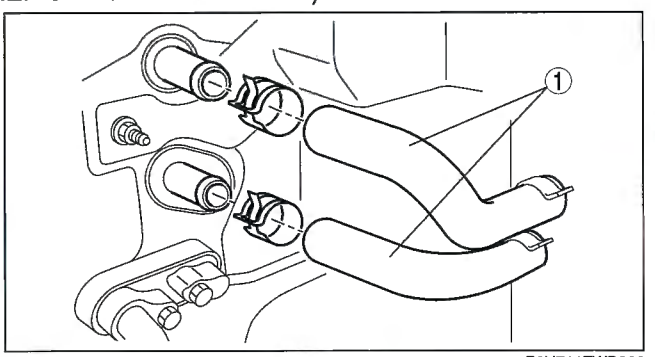

E6U711ZWB002

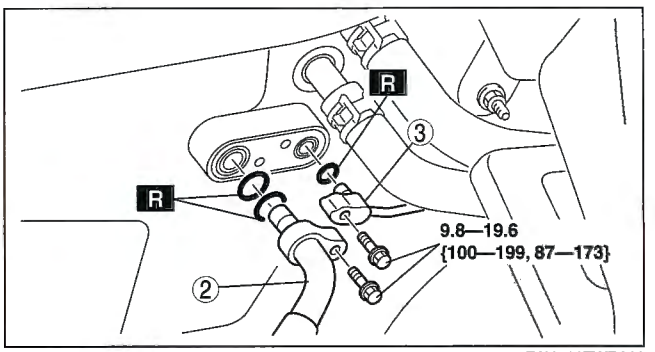

E6U711ZWB003

1	Heater hose
2	Cooler hose (Lo) (See 07–11–22 Refrigerant Lines Removal Note.) (See 07–11–22 Refrigerant Lines Installation Note.)
3	Cooler pipe No.3 (See 07–11–22 Refrigerant Lines Removal Note.) (See 07–11–22 Refrigerant Lines Installation Note.)
4	A/C unit (See 07–11–8 A/C Unit Installation Note.)

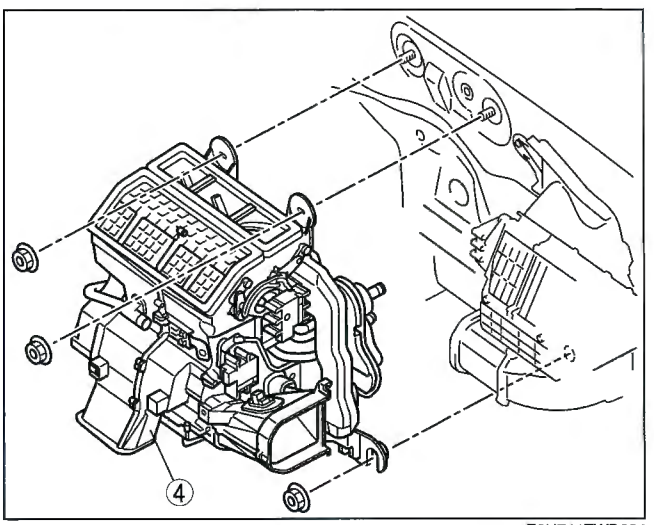

E6U711ZWB004

7. Install in the reverse order of removal.
8. Perform the refrigerant system performance test. (See 07–10–4 REFRIGERANT SYSTEM PERFORMANCE TEST [L3 WITH TC].)

A/C Unit Installation Note

1. When installing a new A/C unit or evaporator, add a supplemental amount of ATMOS GU10 compressor oil into the refrigerant cycle.

Supplemental amount (approx. quantity)
25 ml {25 cc, 0.8 fl oz}

A/C UNIT DISASSEMBLY/ASSEMBLY [L3, AJ]

E6U071161130W02

1. Disassemble in the order indicated in the table.
2. Assemble in the reverse order of disassembly.

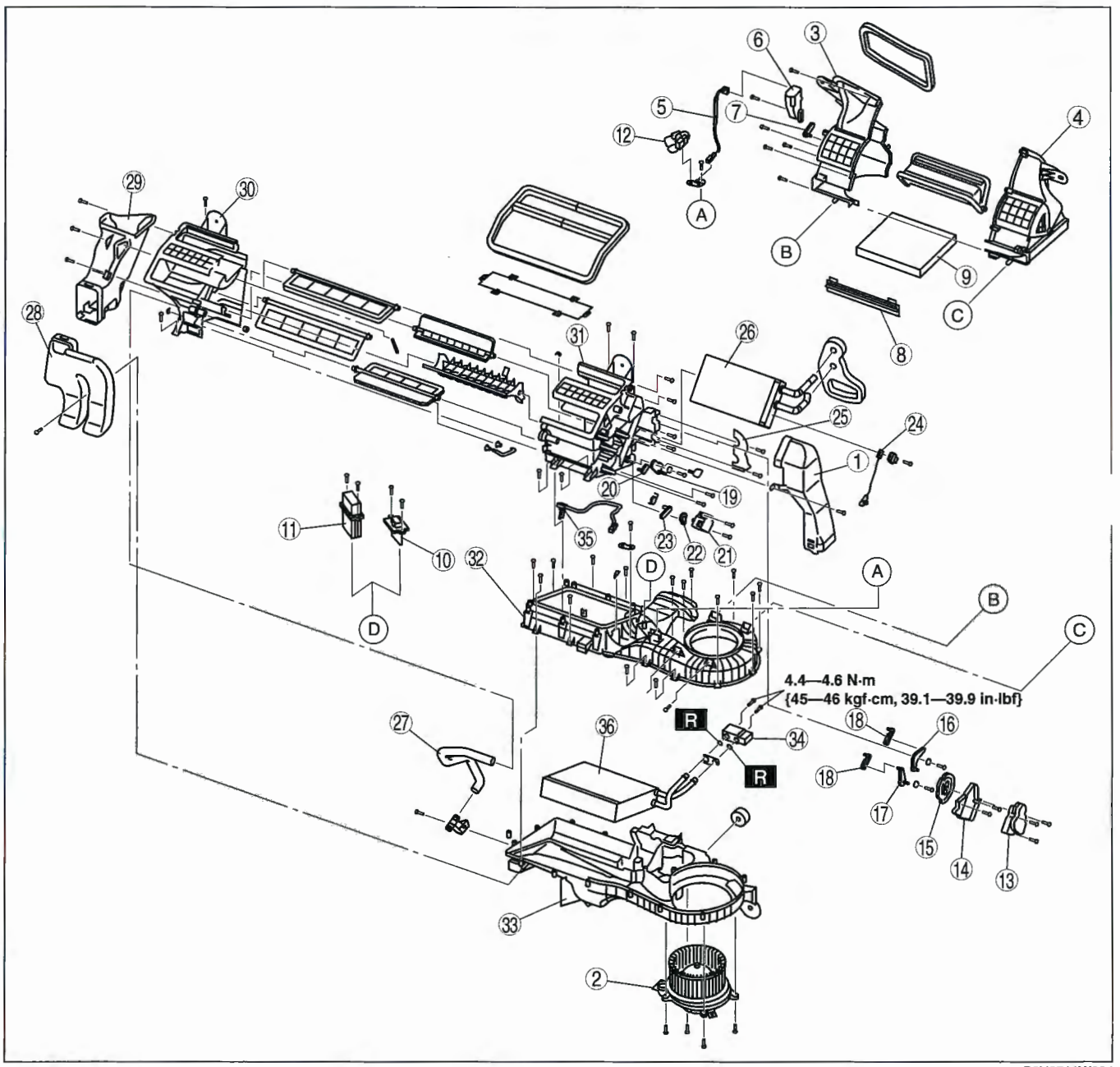

B6U0711W004

1	Duct (1)
2	Blower motor
3	A/C case (3)
4	A/C case (4)
5	Harness (1)
6	Air intake actuator

7	Air intake crank
8	Air filter cover
9	Air filter
10	Resistor (manual air conditioner)
11	PWM unit (full-auto air conditioner)
12	Harness (2) (full-auto air conditioner)

13	Airflow mode actuator
14	Airflow mode bracket
15	Airflow mode main link
16	Airflow mode sub link (1)
17	Airflow mode sub link (2)
18	Airflow mode crank
19	Air mix link (1) (manual air conditioner)
20	Air mix crank (1) (manual air conditioner)
21	Air mix actuator (full-auto air conditioner)
22	Air mix link (2) (full-auto air conditioner)
23	Air mix crank (2) (full-auto air conditioner)
24	Water temperature sensor (full-auto air conditioner)
25	Heater core cover

26	Heater core
27	Air hose (full-auto air conditioner)
28	Duct (2)
29	Duct (3)
30	A/C case (1)
31	A/C case (2)
32	A/C case (5)
33	A/C case (6)
34	Expansion valve
35	Evaporator temperature sensor (See 07–11–9 Evaporator Temperature Sensor Assembly Note.)
36	Evaporator

Evaporator Temperature Sensor Assembly Note

1. Assemble the evaporator temperature sensor as shown in the figure.

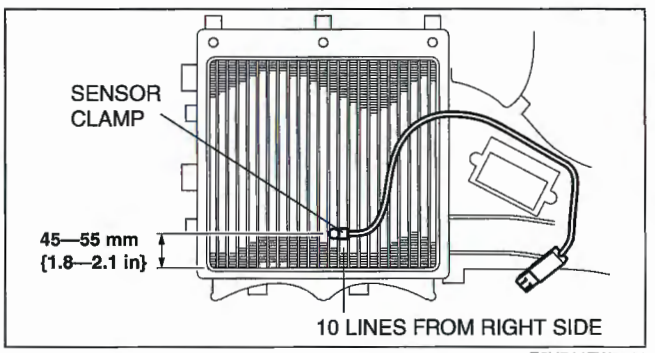

E6U711ZW5101

A/C UNIT DISASSEMBLY/ASSEMBLY [L3 WITH TC]

E6U071161130W06

1. Disassemble in the order indicated in the table.
2. Assemble in the reverse order of disassembly.

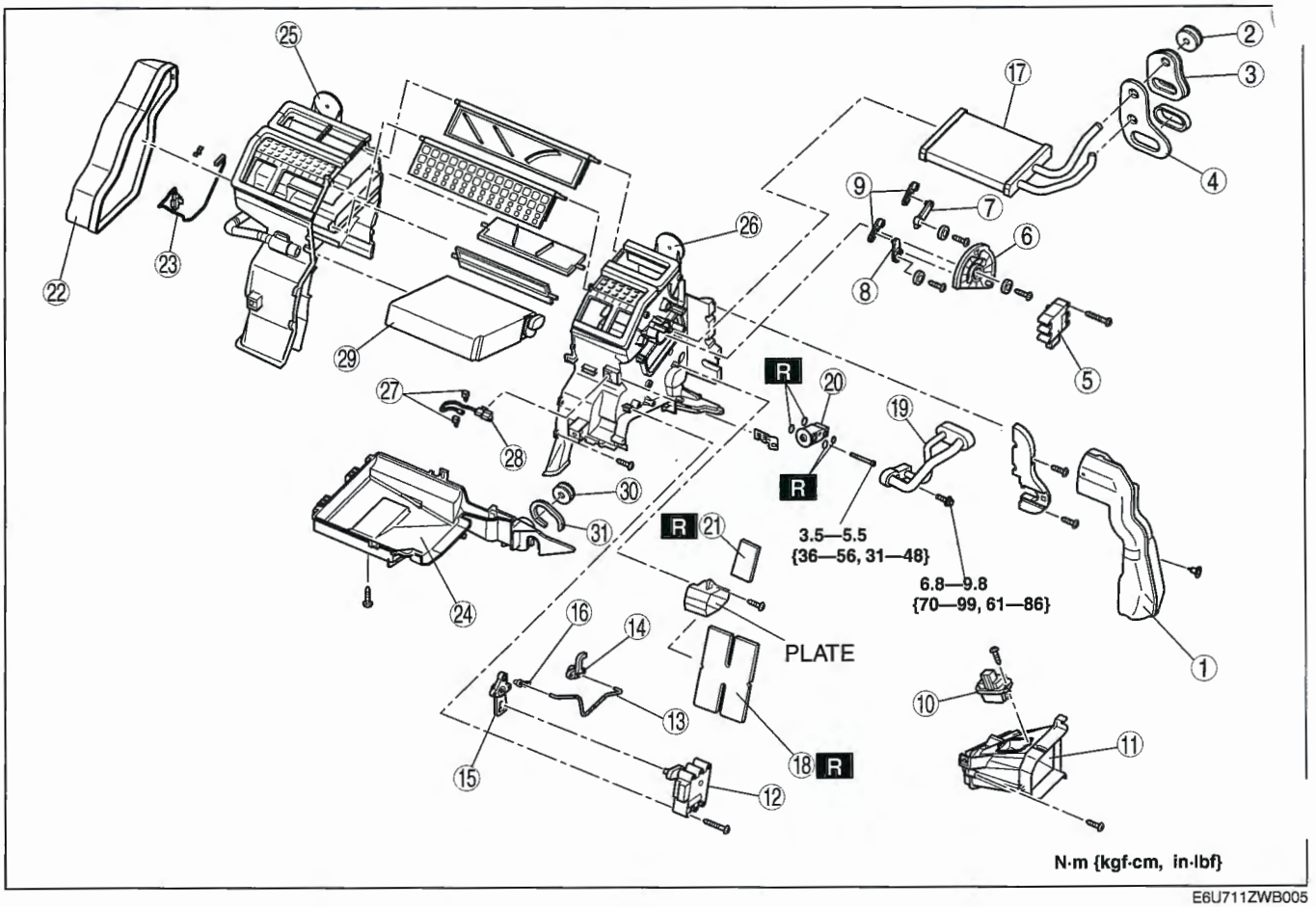

E6U711ZWB005

1	Duct (1)
2	Polyurethane protector (1)
3	Polyurethane protector (2)
4	Polyurethane protector (3)
5	Airflow mode actuator
6	Airflow mode main link
7	Airflow mode sub link (2)
8	Airflow mode sub link (3)
9	Airflow mode crank
10	Power MOS FET
11	Duct (2)
12	Air mix actuator
13	Air mix rod
14	Air mix crank (1)
15	Air mix crank (2)
16	Air mix rod holder
17	Heater core
18	Adhesive polyurethane (1) (See 07–11–12 Adhesive polyurethane (1) Assembly Note.)

19	Outlet pipe
20	Expansion valve
21	Adhesive polyurethane (2) (See 07–11–11 Adhesive polyurethane (2) Assembly Note.)
22	Duct (3)
23	A/C water temperature sensor
24	A/C case (3)
25	A/C case (1)
26	A/C case (2)
27	Sensor clamp (See 07–11–11 Sensor Clamp Assembly Note.)
28	Evaporator temperature sensor (See 07–11–11 Evaporator Temperature Sensor Assembly Note.)
29	Evaporator
30	Polyurethane protector (4)
31	Adhesive polyurethane (3)

Evaporator Temperature Sensor Assembly Note

1. Assemble the evaporator temperature sensor as shown in the figure.

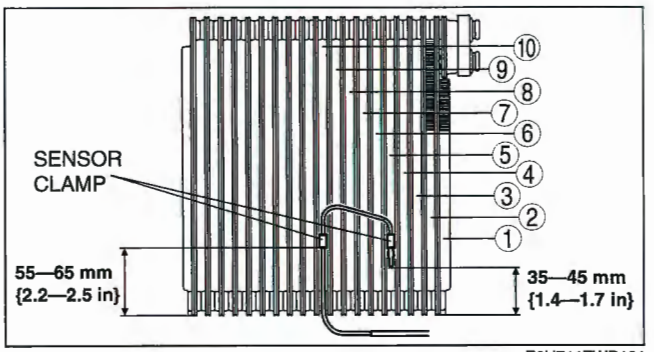

E6U711ZWB101

Sensor Clamp Assembly Note

1. Attach the sensor clamp as shown in the figure.

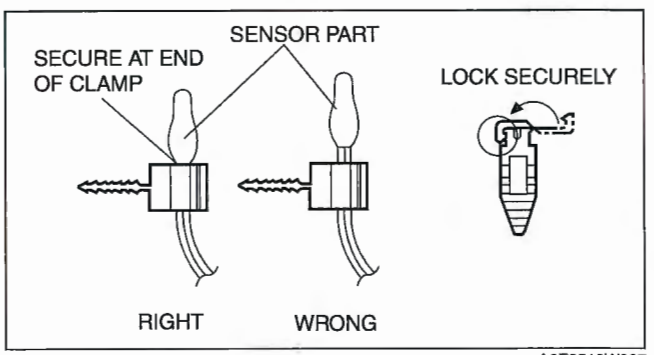

A6E8516W007

Adhesive polyurethane (2) Assembly Note

1. Attach the adhesive polyurethane (2) as shown in the figure.

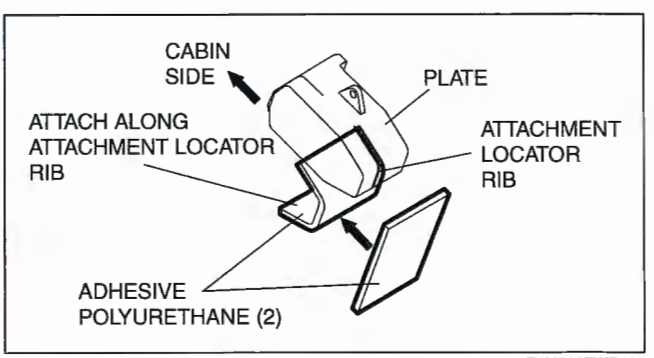

E6U711ZWB102

2. After assembling the outlet pipe as shown in the figure, attach the adhesive polyurethane (2) so that it adheres around the high-pressure side of the outlet pipe.

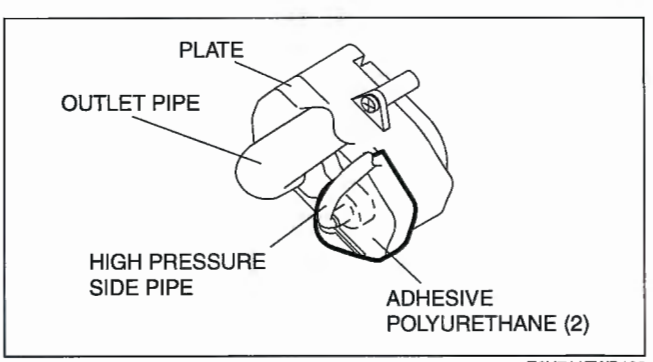

E6U711ZWB103

Adhesive polyurethane (1) Assembly Note

1. Attach the adhesive polyurethane (2) as shown in the figure.

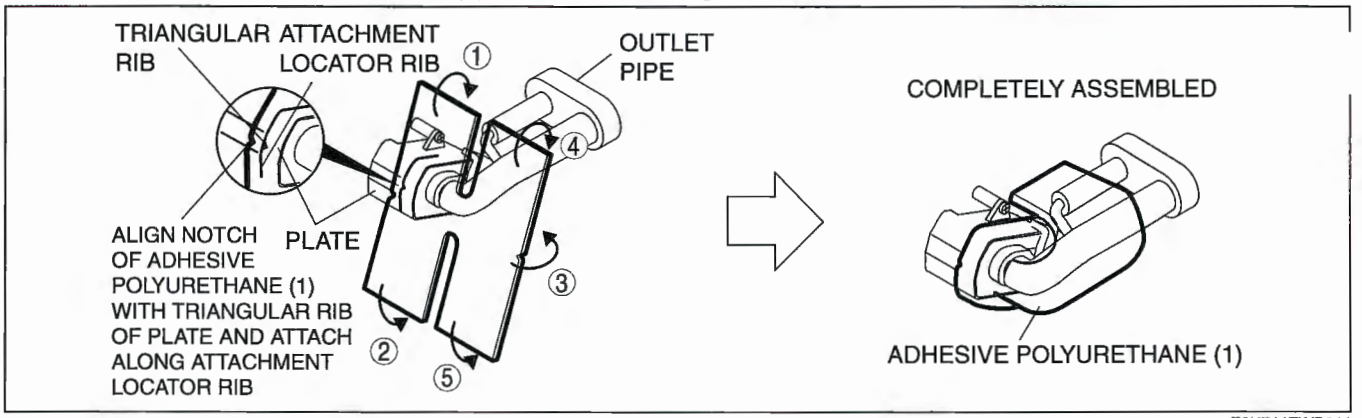

E6U711ZWB011

AIR FILTER REMOVAL/INSTALLATION

E6U071161130W03

1. Remove the glove compartment.
2. Remove in the order indicated in the table.

1	Air filter cover
2	Air filter

3. Install in the reverse order of removal.

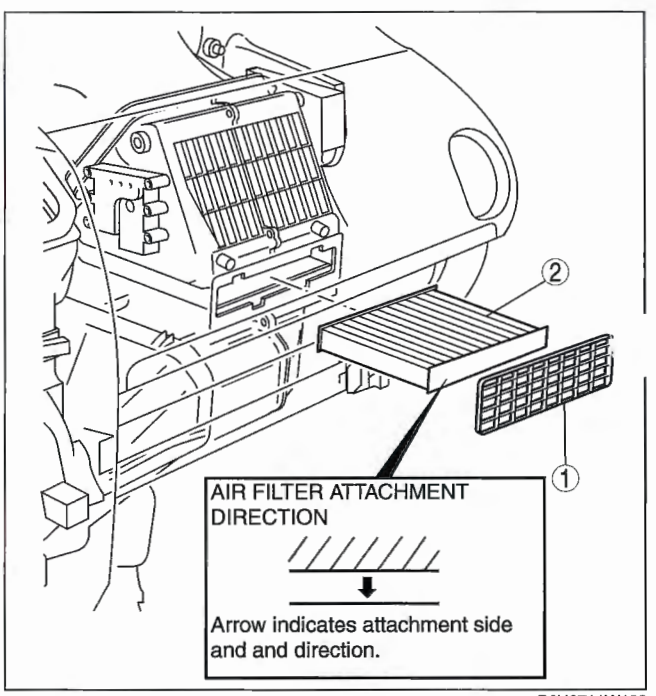

B6U0711W128

AIR FILTER INSPECTION

E6U071161130W04

1. Inspect for damage, excessive dirt, or foul smell.
   - If the air filter is damaged, excessively dirty, or foul smelling, replace it.

Note

- The air filter cannot be reused by cleaning it with water or compressed air.

EXPANSION VALVE REMOVAL/INSTALLATION [L3 WITH TC]

E6U071161130W07

1. Disconnect the negative battery cable.
2. Discharge the refrigerant from the system. (See 07–10–5 REFRIGERANT RECOVERY.) (See 07–10–8 REFRIGERANT CHARGING [L3 WITH TC].)

Caution

- **If moisture or foreign material enters the refrigeration cycle, cooling ability will be lowered and abnormal noise will occur. Always immediately plug open fittings after removing any refrigeration cycle parts to keep moisture or foreign material out of the cycle.**

3. Disconnect the cooler hose (Lo) and cooler pipe No.3. (See 07–11–20 REFRIGERANT LINES REMOVAL/INSTALLATION [L3 WITH TC].)
4. Remove the passenger-side air bag module. (See 08–10–7 PASSENGER-SIDE AIR BAG MODULE REMOVAL/INSTALLATION.)
5. Remove the duct (1).
6. Remove the air mix actuator. (See 07–40–8 AIR MIX ACTUATOR REMOVAL/INSTALLATION [L3 WITH TC].)
7. Remove the adhesive polyurethane (1). (See 07–11–12 Adhesive polyurethane (1) Assembly Note.)
8. Remove the screws and cover.
9. Remove the one bolt and shift the outlet pipe. Do not allow compressor oil to spill.
10. Remove the two bolts.
11. Remove the expansion valve. Do not allow compressor oil to spill.
12. Remove the screws and plate.
13. Remove the adhesive polyurethane (2). (See 07–11–11 Adhesive polyurethane (2) Assembly Note.)

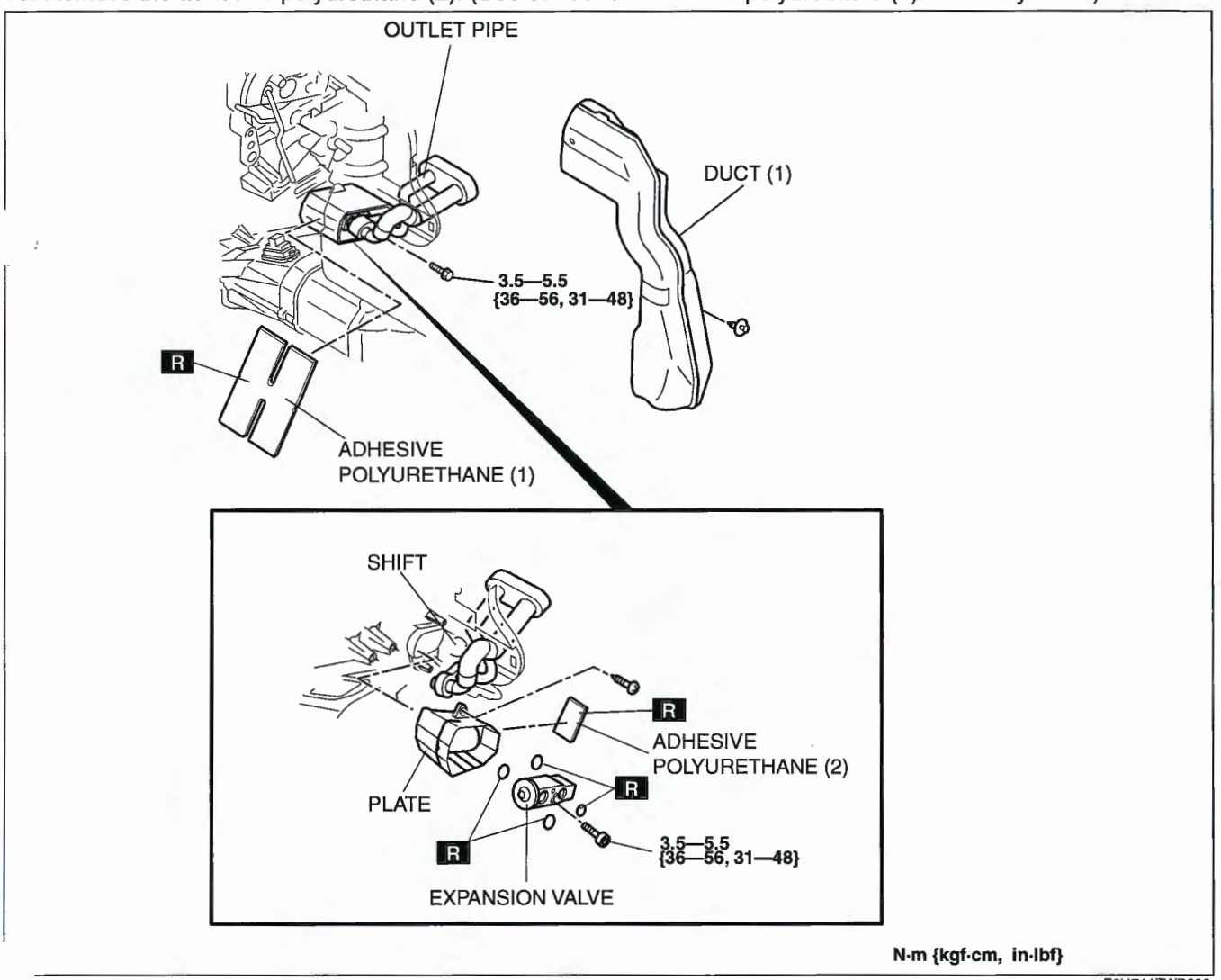

E6U711ZWB006

14. Install in the reverse order of removal.
15. Perform the refrigerant system performance test. (See 07–10–4 REFRIGERANT SYSTEM PERFORMANCE TEST [L3 WITH TC].)

EVAPORATOR INSPECTION

E6U071161810W01

1. Remove the evaporator from the A/C unit.
2. Inspect for cracks, damage, and oil leakage.
   - If any problems are found, replace the evaporator.
3. Inspect for bent fins.
   - If any are bent, use a flathead screwdriver to straighten them.

HEATER CORE INSPECTION

E6U071161910W01

1. Remove the heater core from the A/C unit.
2. Inspect for cracks, damage, and coolant leakage.
   - If any problems are found, replace the heater core.
3. Inspect for bent fins.
   - If any are bent, use a flathead screwdriver to straighten them.
4. Verify that the heater core inlet and outlet pipes are not distorted or damaged.
   - Repair with pliers if necessary.

REAR HEAT DUCT REMOVAL/INSTALLATION [L3, AJ]

E6U071161273W01

1. Turn over the floor covering. (See 09–17–27 FLOOR COVERING REMOVAL/INSTALLATION.)
2. Remove in the order indicated in the table.

1	Rear heat duct No.2
2	Rear heat duct No.3
3	Rear heat duct No.4

3. Install in the reverse order of removal.

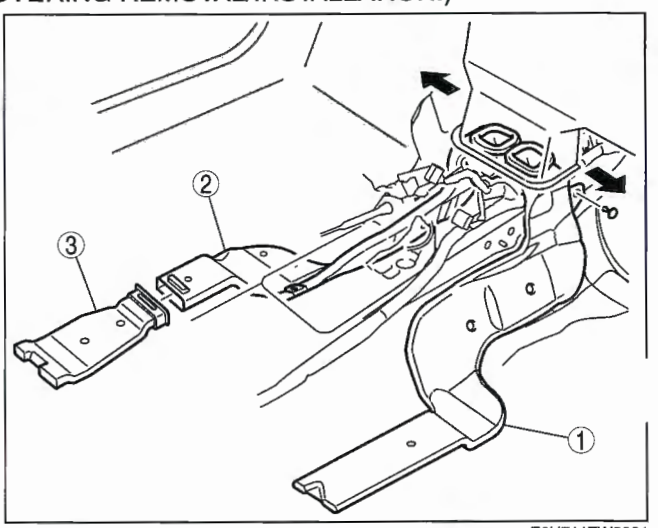

E6U711ZW5001

REAR HEAT DUCT REMOVAL/INSTALLATION [L3 WITH TC]

E6U071161273W02

1. Turn over the floor covering. (See 09–17–27 FLOOR COVERING REMOVAL/INSTALLATION.)
2. Remove in the order indicated in the table.

1	Rear heat duct (Right)
2	Rear heat duct (Left)

3. Install in the reverse order of removal.

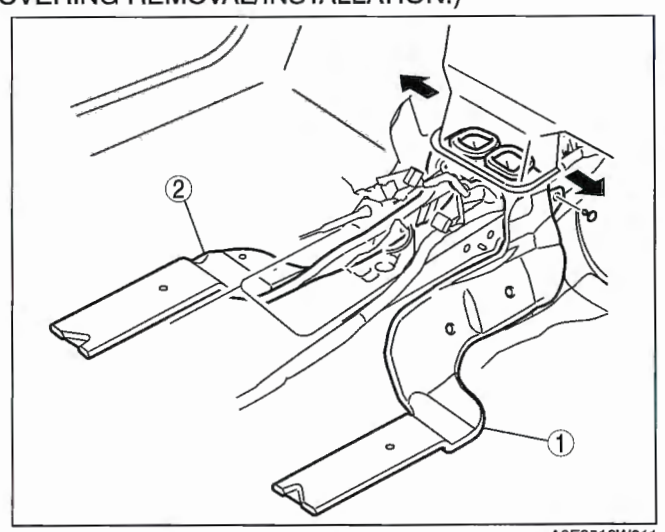

A6E8516W011

A/C COMPRESSOR REMOVAL/INSTALLATION [L3, AJ]

E6U071161450W01

1. Disconnect the negative battery cable.
2. Discharge the refrigerant from the system. (See 07–10–5 REFRIGERANT CHARGING [L3, AJ].)
   Remove the right side splash shield and mudguard.
3. Remove the WU-TWC. (AJ only) (See 01–15C–2 EXHAUST SYSTEM REMOVAL/INSTALLATION [AJ].)
5. Loosen the drive belt and remove it.

Caution

- **If moisture or foreign material enters the refrigeration cycle, cooling ability will be lowered and abnormal noise will occur. Always immediately plug open fittings after removing any refrigeration cycle parts to keep moisture or foreign material out of the cycle.**

6. Remove in the order indicated in the table. Do not allow compressor oil to spill.

1	Cooler hose (HI) (See 07–11–20 Refrigerant Lines Installation Note.)
2	Cooler pipe No.1 (See 07–11–20 Refrigerant Lines Installation Note.)
3	Magnetic clutch connector
4	A/C compressor (See 07–11–15 A/C Compressor Installation Note.)

7. Install in the reverse order of removal.
8. Adjust the drive belt.
9. Perform the refrigerant system performance test.
   (See 07–10–3 REFRIGERANT SYSTEM PERFORMANCE TEST [L3, AJ].)

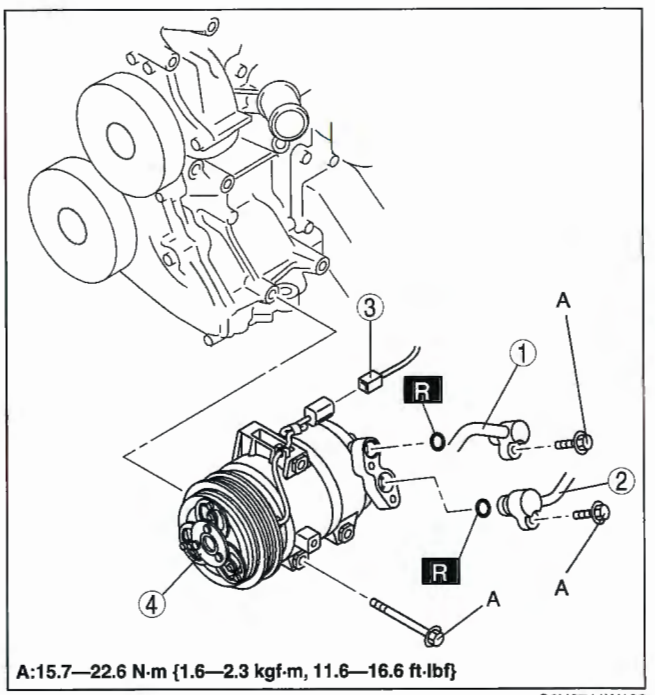

A:15.7—22.6 N·m {1.6—2.3 kgf·m, 11.6—16.6 ft·lbf}

C6U0711W102

07–11

A/C Compressor Installation Note

Caution

- **Due to the high moisture-absorption characteristics of the compressor oil, it may absorb moisture if left over a long period of time thereby negatively affecting A/C operation. Drain the compressor oil and refill within 10 min. of each other.**

1. Rotate new A/C compressor shaft six to eight revolutions while collecting refrigerant oil in a clean measuring device. Use this refrigerant oil to refill new compressor. Do not allow refrigerant oil to become contaminated.
2. Rotate old A/C compressor shaft six to eight revolutions while collecting refrigerant oil in a separate, clean measuring device.
3. Compare those oil amounts. The amount of the oil drained from the new A/C compressor should be greater than the old one.

4. Pour the same amount oil of drained from the old A/C compressor back into the new A/C compressor.

A/C compressor oil type
- **ZXL 100PG**

A/C compressor oil sealed volume (approx. quantity)
- **150 ml {150 cc, 5.07 fl oz}**

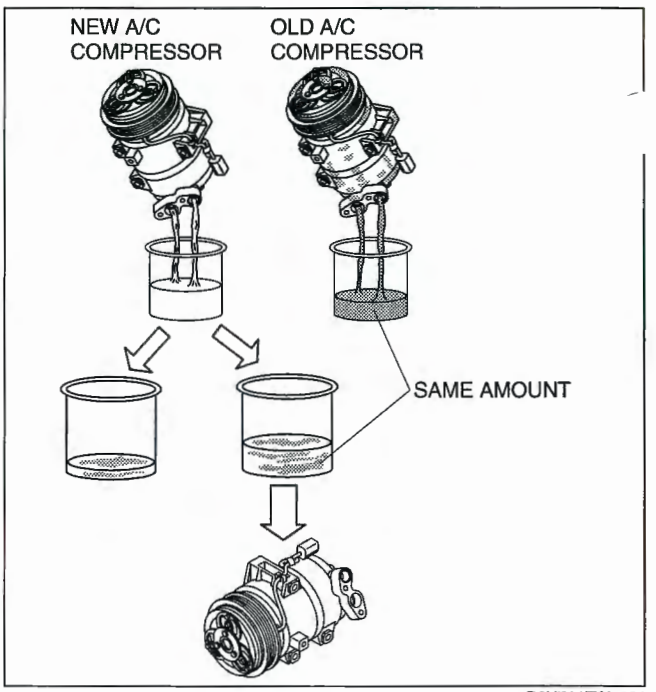

D6U711ZW7001

A/C COMPRESSOR REMOVAL/INSTALLATION [L3 WITH TC]

E6U071161450W02

1. Disconnect the negative battery cable.
2. Discharge the refrigerant from the system. (See 07–10–5 REFRIGERANT RECOVERY.) (See 07–10–8 REFRIGERANT CHARGING [L3 WITH TC].)
3. Remove the right side splash shield and mudguard.
4. Loosen the drive belt and remove it.

Caution
- **If moisture or foreign material enters the refrigeration cycle, cooling ability will be lowered and abnormal noise will occur. Always immediately plug open fittings after removing any refrigeration cycle parts to keep moisture or foreign material out of the cycle.**

5. Remove in the order indicated in the table. Do not allow compressor oil to spill.

1	Cooler hose (HI) (See 07–11–22 Refrigerant Lines Installation Note.)
2	Cooler pipe No.4 (See 07–11–22 Refrigerant Lines Installation Note.)
3	Magnetic clutch connector
4	A/C compressor (See 07–11–17 A/C Compressor Installation Note.)

6. Install in the reverse order of removal.
7. Adjust the drive belt.
8. Perform the refrigerant system performance test. (See 07–10–4 REFRIGERANT SYSTEM PERFORMANCE TEST [L3 WITH TC].)

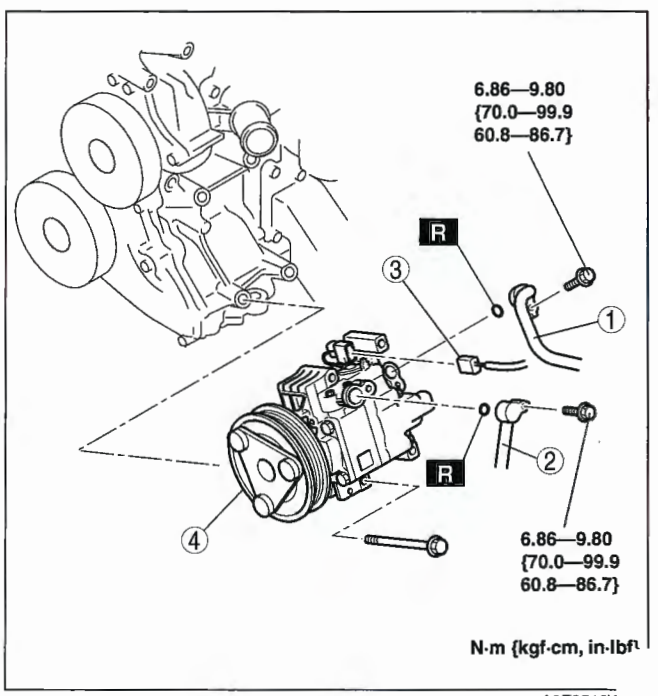

A6E8516W

A/C Compressor Installation Note

Caution

- **Due to the high moisture-absorption characteristics of the compressor oil, it may absorb moisture if left over a long period of time thereby negatively affecting A/C operation. Drain the compressor oil and refill within 10 min. of each other.**

1. Rotate new A/C compressor shaft six to eight revolutions while collecting refrigerant oil in a clean measuring device. Use this refrigerant oil to refill new compressor. Do not allow refrigerant oil to become contaminated.
2. Rotate old A/C compressor shaft six to eight revolutions while collecting refrigerant oil in a separate, clean measuring device.
3. Compare those oil amounts. The amount of the oil drained from the new A/C compressor should be greater than the old one.
4. Pour the same amount oil of drained from the old A/C compressor back into the new A/C compressor.

A/C compressor oil type

- **ATMOS GU10**

A/C compressor oil sealed volume (approx. quantity)

- **150 ml {150 cc, 5.07 fl oz}**

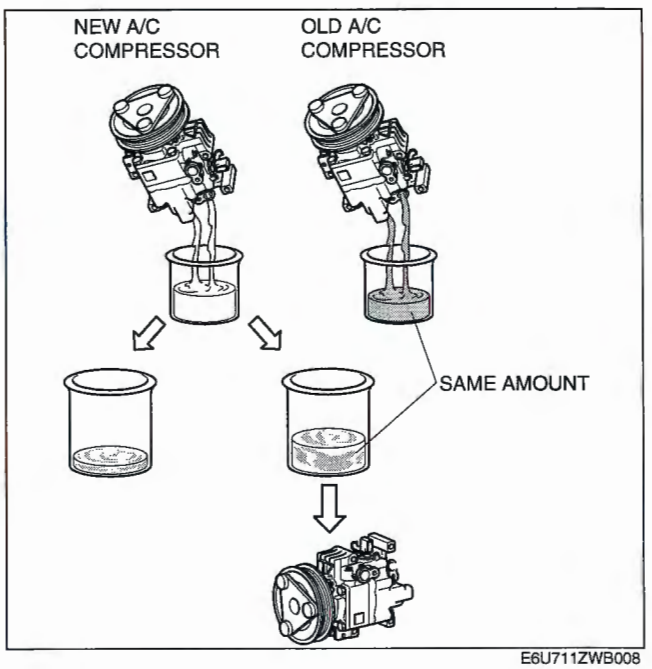

E6U711ZWB008

CONDENSER REMOVAL/INSTALLATION [L3, AJ]

E6U071161480W01

1. Disconnect the negative battery cable.
2. Discharge the refrigerant from the system. (See 07–10–5 REFRIGERANT CHARGING [L3, AJ].)
3. Remove the shroud panel. (See 09–10–17 SHROUD PANEL REMOVAL/INSTALLATION.)

Caution

- **If moisture or foreign material enters the refrigeration cycle, cooling ability will be lowered and abnormal noise will occur. Always immediately plug all open fittings after removing any refrigeration cycle parts to keep moisture or foreign material out of the cycle.**

4. Remove in the order indicated in the table. Do not allow compressor oil to spill.

1	Cooler hose (HI) (See 07–11–20 Refrigerant Lines Removal Note.) (See 07–11–20 Refrigerant Lines Installation Note.)
2	Cooler pipe No.1 (See 07–11–20 Refrigerant Lines Removal Note.) (See 07–11–20 Refrigerant Lines Installation Note.)
3	Condenser (See 07–11–18 Condenser Installation Note.)

5. Install in the reverse order of removal.
6. Perform the refrigerant system performance test. (See 07–10–3 REFRIGERANT SYSTEM PERFORMANCE TEST [L3, AJ].)

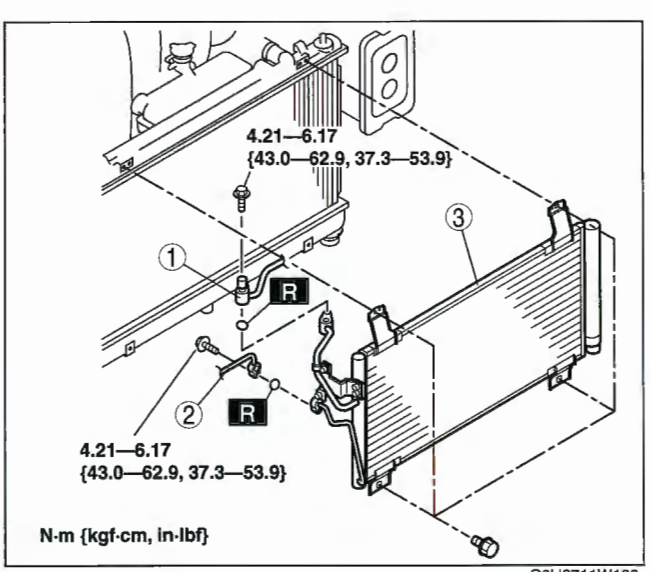

C6U0711W103

Condenser Installation Note

1. When installing a new condenser, add a supplemental amount of ZXL 100PG compressor oil inlet the refrigerant cycle.

Supplemental amount (approx. quantity)
50 ml {50 cc, 1.6 fl oz}

CONDENSER REMOVAL/INSTALLATION [L3 WITH TC]

E6U071161480W03

1. Disconnect the negative battery cable.
2. Discharge the refrigerant from the system. (See 07–10–5 REFRIGERANT RECOVERY.) (See 07–10–8 REFRIGERANT CHARGING [L3 WITH TC].)
3. Remove the shroud panel. (See 09–10–17 SHROUD PANEL REMOVAL/INSTALLATION.)

Caution

- **If moisture or foreign material enters the refrigeration cycle, cooling ability will be lowered and abnormal noise will occur. Always immediately plug all open fittings after removing any refrigeration cycle parts to keep moisture or foreign material out of the cycle.**

4. Remove in the order indicated in the table. Do not allow compressor oil to spill.

1	Cooler pipe No.1 (See 07–11–22 Refrigerant Lines Removal Note.) (See 07–11–22 Refrigerant Lines Installation Note.)
2	Cooler pipe No.2 (See 07–11–22 Refrigerant Lines Removal Note.) (See 07–11–22 Refrigerant Lines Installation Note.)
3	Condenser (See 07–11–18 Condenser Installation Note.)

5. Install in the reverse order of removal.
6. Perform the refrigerant system performance test. (See 07–10–4 REFRIGERANT SYSTEM PERFORMANCE TEST [L3 WITH TC].)

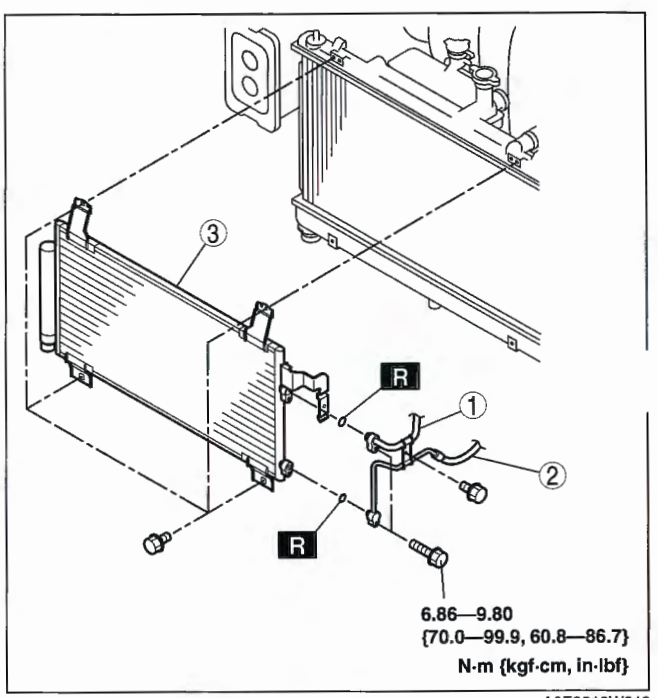

A6E8516W013

Condenser Installation Note

1. When installing a new condenser, add a supplemental amount of ATMOS GU10 compressor oil inlet the refrigerant cycle.

Supplemental amount (approx. quantity)
20 ml {20 cc, 0.7 fl oz}

CONDENSER INSPECTION

E6U071161480W02

1. Inspect for cracks, damage, and oil leakage.
   - If any are found, replace the condenser.
2. Inspect for fins clogged by dust.
   - If any are clogged, remove the dust from the fins.
3. Inspect for bent fins.
   - If any are bent, use a flathead screwdriver to straighten them.

REFRIGERANT LINES REMOVAL/INSTALLATION [L3, AJ]

E6U071161460W01

1. Remove the battery.
2. Discharge the refrigerant from the system. (See 07–10–5 REFRIGERANT CHARGING [L3, AJ].)
   Remove the reservoir. (AJ)
3. Remove the washer tank. (AJ) (See 09–19–6 WASHER TANK REMOVAL/INSTALLATION [SPORT SEDAN].)
   (See 09–19–6 WASHER TANK REMOVAL/INSTALLATION [5-DOOR, SPORT WAGON].)
5. Remove the under cover.

Caution

- **If moisture or foreign material enters the refrigeration cycle, cooling ability will be lowered and abnormal noise will occur. Always immediately plug all open fittings after removing any refrigeration cycle parts to keep moisture or foreign material out of the cycle.**

6. Remove in the order indicated in the table. Do not allow compressor oil to spill.
7. Install in the reverse order of removal.
8. Perform the refrigerant system performance test. (See 07–10–3 REFRIGERANT SYSTEM PERFORMANCE TEST [L3, AJ].)

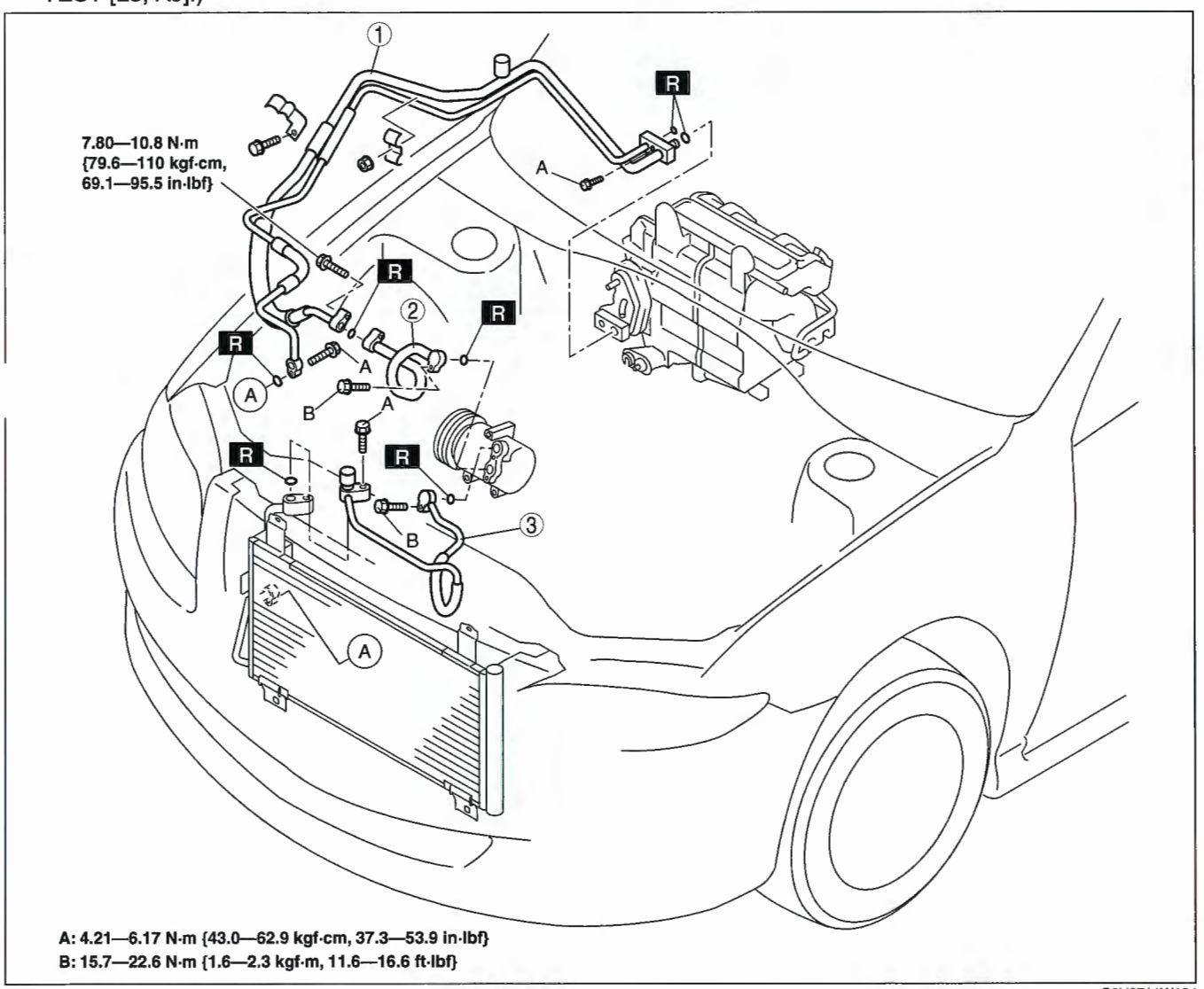

C6U0711W104

1	Cooler pipe No.2 (See 07–11–20 Refrigerant Lines Removal Note.) (See 07–11–20 Refrigerant Lines Installation Note.)
2	Cooler pipe No.1 (See 07–11–20 Refrigerant Lines Removal Note.) (See 07–11–20 Refrigerant Lines Installation Note.)
3	Cooler hose (HI) (See 07–11–20 Refrigerant Lines Removal Note.) (See 07–11–20 Refrigerant Lines Installation Note.)

Refrigerant Lines Removal Note

1. Disconnect the block joint type pipes by grasping female side of the block with pliers or similar tool and holding firmly, then remove the connection bolt or nut.

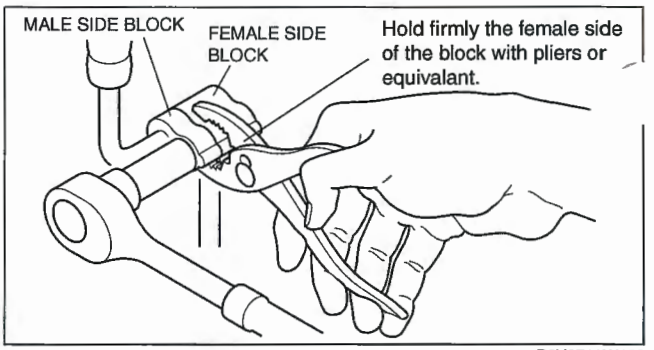

B6U0711W129

Refrigerant Lines Installation Note

1. Tighten the bolt of joint by hand.
2. Tighten the joint to the specified torque.
3. Connect the block joint type pipes by grasping the female side of the block with pliers or similar tool and holding firmly, then tighten the connection bolt with a torque wrench.

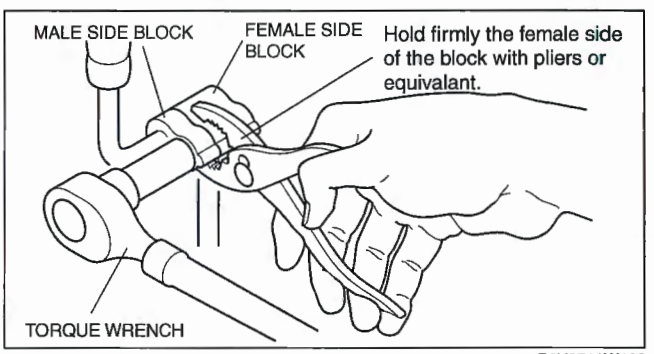

B6U0711W130

REFRIGERANT LINES REMOVAL/INSTALLATION [L3 WITH TC]

E6U07116146

1. Remove the battery.
2. Discharge the refrigerant from the system. (See 07–10–5 REFRIGERANT RECOVERY.) (See 07–10–8 REFRIGERANT CHARGING [L3 WITH TC].)
3. Remove the air cleaner cover, air cleaner element and air cleaner case. (See 01–13B–4 INTAKE AIR SYSTEM REMOVAL/INSTALLATION [L3 WITH TC].)
4. Remove the shroud panel. (See 09–10–17 SHROUD PANEL REMOVAL/INSTALLATION.)
5. Remove the right splash shield.
6. Remove the right mud guard.
7. Remove the front bumper. (See 09–10–10 FRONT BUMPER REMOVAL/INSTALLATION.)
8. Remove the washer tank. (See 09–19–7 WASHER TANK REMOVAL/INSTALLATION [L3 WITH TC].)
9. Remove the front combination light (RH). (See 09–18–8 FRONT COMBINATION LIGHT REMOVAL/INSTALLATION.)
10. Remove in the order indicated in the table. Do not allow compressor oil to spill.

Caution

- **If moisture or foreign material enters the refrigeration cycle, cooling ability will be lowered and abnormal noise will occur. Always immediately plug all open fittings after removing any refrigeration cycle parts to keep moisture or foreign material out of the cycle.**

11. Install in the reverse order of removal.

12. Perform the refrigerant system performance test. (See 07–10–4 REFRIGERANT SYSTEM PERFORMANCE TEST [L3 WITH TC].)

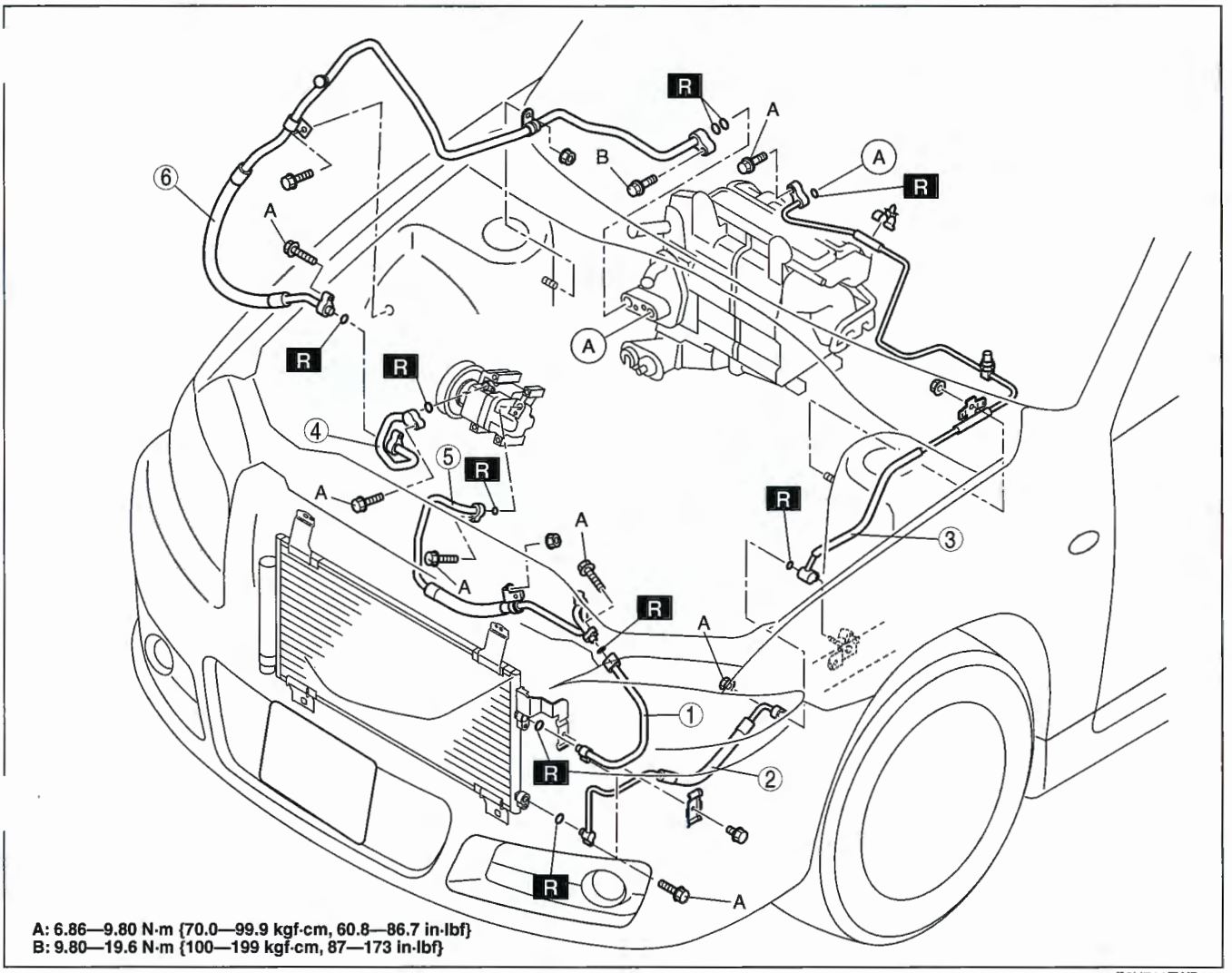

E6U711ZWB007

1	Cooler pipe No.1 (See 07–11–22 Refrigerant Lines Removal Note.) (See 07–11–22 Refrigerant Lines Installation Note.)
2	Cooler pipe No.2 (See 07–11–22 Refrigerant Lines Removal Note.) (See 07–11–22 Refrigerant Lines Installation Note.)
3	Cooler pipe No.3 (See 07–11–22 Refrigerant Lines Removal Note.) (See 07–11–22 Refrigerant Lines Installation Note.)

4	Cooler pipe No.4 (See 07–11–22 Refrigerant Lines Removal Note.) (See 07–11–22 Refrigerant Lines Installation Note.)
5	Cooler hose (HI) (See 07–11–22 Refrigerant Lines Removal Note.) (See 07–11–22 Refrigerant Lines Installation Note.)
6	Cooler hose (LO) (See 07–11–22 Refrigerant Lines Removal Note.) (See 07–11–22 Refrigerant Lines Installation Note.)

Refrigerant Lines Removal Note
Block joint type

1. Disconnect the block joint type pipes by grasping female side of the block with pliers or similar tool and holding firmly, then remove the connection bolt or nut.

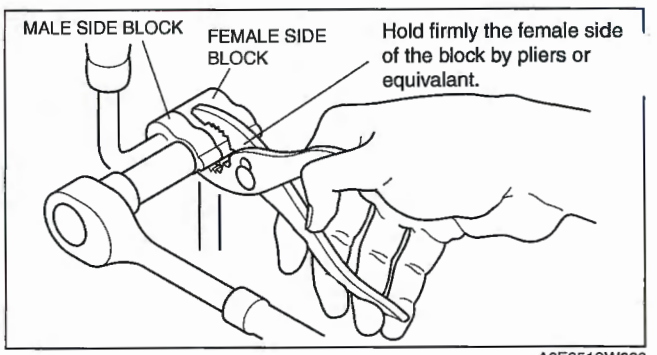

A6E8516W023

Refrigerant Lines Installation Note

1. When installing a new cooler pipe No.4 or cooler hose (LO), add a supplemental amount of ATMOS GU10 compressor oil into the refrigeration cycle.

   Supplemental amount (approx. quantity)
   5 ml {5 cc, 0.2 fl oz}: Cooler pipe No.4
   10 ml {10 cc, 0.3 fl oz}: Cooler hose (LO)

2. Apply compressor oil to the O-rings and connect the joints.
3. Tighten the joints.

Nut or block joint type

1. Tighten the nut or bolt of joint by hand.
2. Tighten the joint to the specified torque. If it is a nut joint, tighten the nut with a spanner and torque wrench.
3. Connect the block joint type pipes by grasping the female side of the block with pliers or similar tool and holding firmly, then tighten the connection bolt or nut with a torque wrench.

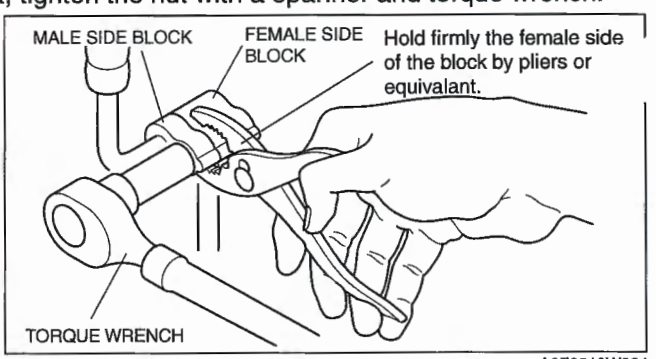

A6E8516W024

07–40 CONTROL SYSTEM

CONTROL SYSTEM LOCATION INDEX [L3, AJ] 07–40–3
CONTROL SYSTEM LOCATION INDEX [L3 WITH TC] 07–40–5
AIR INTAKE ACTUATOR REMOVAL/INSTALLATION [L3, AJ] 07–40–6
AIR INTAKE ACTUATOR REMOVAL/INSTALLATION [L3 WITH TC] 07–40–6
AIR INTAKE ACTUATOR INSPECTION [L3, AJ] 07–40–7
AIR INTAKE ACTUATOR INSPECTION [L3 WITH TC] 07–40–7
AIR MIX ACTUATOR REMOVAL/INSTALLATION [L3, AJ]... 07–40–8
AIR MIX ACTUATOR REMOVAL/INSTALLATION [L3 WITH TC] 07–40–8
AIR MIX ACTUATOR INSPECTION [L3, AJ] 07–40–9
Reset Methods..... 07–40–9
AIR MIX ACTUATOR INSPECTION [L3 WITH TC] 07–40–10
AIRFLOW MODE ACTUATOR REMOVAL/INSTALLATION [L3, AJ] 07–40–10
AIRFLOW MODE ACTUATOR REMOVAL/INSTALLATION [L3 WITH TC] 07–40–11
AIRFLOW MODE ACTUATOR INSPECTION [L3, AJ]..... 07–40–11
Full-auto Air Conditioner 07–40–11
Manual Air Conditioner 07–40–12
AIRFLOW MODE ACTUATOR INSPECTION [L3 WITH TC] 07–40–13
BLOWER MOTOR REMOVAL/INSTALLATION..... 07–40–14
BLOWER MOTOR INSPECTION 07–40–14
RESISTOR REMOVAL/INSTALLATION..... 07–40–14
RESISTOR INSPECTION 07–40–15
PWM UNIT INSPECTION [L3, AJ] 07–40–15
POWER METAL OXIDE SEMICONDUCTOR FIELD EFFECT TRANSISTOR (POWER MOS FET) REMOVAL/INSTALLATION [L3 WITH TC] 07–40–16
POWER METAL OXIDE EMICONDUCTOR FIELD EFFECT TRANSISTOR (POWER MOS FET) INSPECTION [L3 WITH TC] 07–40–16
MAGNETIC CLUTCH DISASSEMBLY/ASSEMBLY [L3, AJ] 07–40–16
Bolt Removal/Installation Note..... 07–40–17
Snap Ring Installation Note 07–40–17
MAGNETIC CLUTCH DISASSEMBLY/ASSEMBLY [L3 WITH TC] 07–40–17
Bolt Removal/Installation Note..... 07–40–18
Stator and Thermal Protector Removal Note 07–40–18
Stator and Thermal Protector Installation Note 07–40–18
Screw Installation Note 07–40–18
Clamp Installation Note..... 07–40–18
Snap Ring Installation Note..... 07–40–18
MAGNETIC CLUTCH ADJUSTMENT [L3, AJ]..... 07–40–19
MAGNETIC CLUTCH ADJUSTMENT [L3 WITH TC] 07–40–19
MAGNETIC CLUTCH INSPECTION [L3, AJ]..... 07–40–20
MAGNETIC CLUTCH INSPECTION [L3 WITH TC] 07–40–20
SOLAR RADIATION SENSOR REMOVAL/INSTALLATION 07–40–21
SOLAR RADIATION SENSOR INSPECTION 07–40–21
AMBIENT TEMPERATURE SENSOR REMOVAL/INSTALLATION 07–40–21
AMBIENT TEMPERATURE SENSOR INSPECTION [L3, AJ] 07–40–22
AMBIENT TEMPERATURE SENSOR INSPECTION [L3 WITH TC]..... 07–40–22
PASSENGER COMPARTMENT TEMPERATURE SENSOR REMOVAL/INSTALLATION [L3, AJ]..... 07–40–23
PASSENGER COMPARTMENT TEMPERATURE SENSOR REMOVAL/INSTALLATION [L3 WITH TC] 07–40–23
PASSENGER COMPARTMENT TEMPERATURE SENSOR INSPECTION [L3, AJ] 07–40–23
PASSENGER COMPARTMENT TEMPERATURE SENSOR INSPECTION [L3 WITH TC] 07–40–24
EVAPORATOR TEMPERATURE SENSOR REMOVAL/INSTALLATION 07–40–24
EVAPORATOR TEMPERATURE SENSOR INSPECTION [L3, AJ] 07–40–24
EVAPORATOR TEMPERATURE SENSOR INSPECTION [L3 WITH TC]..... 07–40–25
WATER TEMPERATURE SENSOR REMOVAL/INSTALLATION [L3, AJ]..... 07–40–25
A/C WATER TEMPERATURE SENSOR REMOVAL/INSTALLATION [L3 WITH TC] 07–40–25
WATER TEMPERATURE SENSOR INSPECTION [L3, AJ] 07–40–26
A/C WATER TEMPERATURE SENSOR INSPECTION [L3 WITH TC]..... 07–40–27
REFRIGERANT PRESSURE SWITCH REMOVAL/INSTALLATION [L3, AJ]..... 07–40–27
Refrigerant Pressure Switch Installation Note 07–40–27
REFRIGERANT PRESSURE SWITCH REMOVAL/INSTALLATION [L3 WITH TC] 07–40–28

Refrigerant Pressure Switch Installation Note 07–40–28
REFRIGERANT PRESSURE SWITCH INSPECTION [L3, AJ] **07–40–28**
REFRIGERANT PRESSURE SWITCH INSPECTION [L3 WITH TC] **07–40–29**
CLIMATE CONTROL UNIT REMOVAL [L3, AJ] **07–40–30**
CLIMATE CONTROL UNIT INSTALLATION [L3, AJ] **07–40–30**
CLIMATE CONTROL UNIT REMOVAL/INSTALLATION [L3 WITH TC] **07–40–31**
CLIMATE CONTROL UNIT DISASSEMBLY/ASSEMBLY [L3, AJ] **07–40–31**
Wire Disassembly Note **07–40–32**
Wire Assembly Note **07–40–32**
CLIMATE CONTROL UNIT DISASSEMBLY/ASSEMBLY [L3 WITH TC] **07–40–32**
CLIMATE CONTROL UNIT WIRE ADJUSTMENT **07–40–32**
Air Mix Wire **07–40–32**
CLIMATE CONTROL UNIT INSPECTION [L3, AJ] **07–40–33**
Full-auto Air Conditioner **07–40–33**
Manual Air Conditioner **07–40–38**
CLIMATE CONTROL UNIT INSPECTION [L3 WITH TC] **07–40–39**
Terminal Voltage Table (Reference) ... **07–40–39**

CONTROL SYSTEM LOCATION INDEX [L3, AJ]

E6U074000000W01

MANUAL AIR CONDITIONER

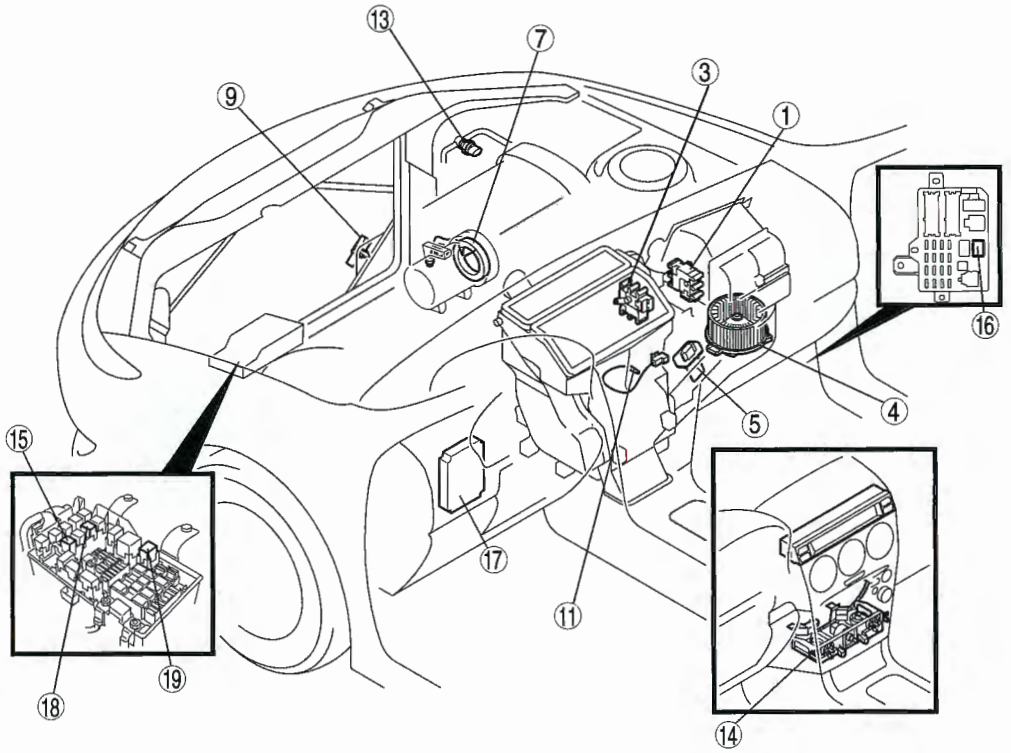

B6U0740W046

FULL-AUTO AIR CONDITIONER

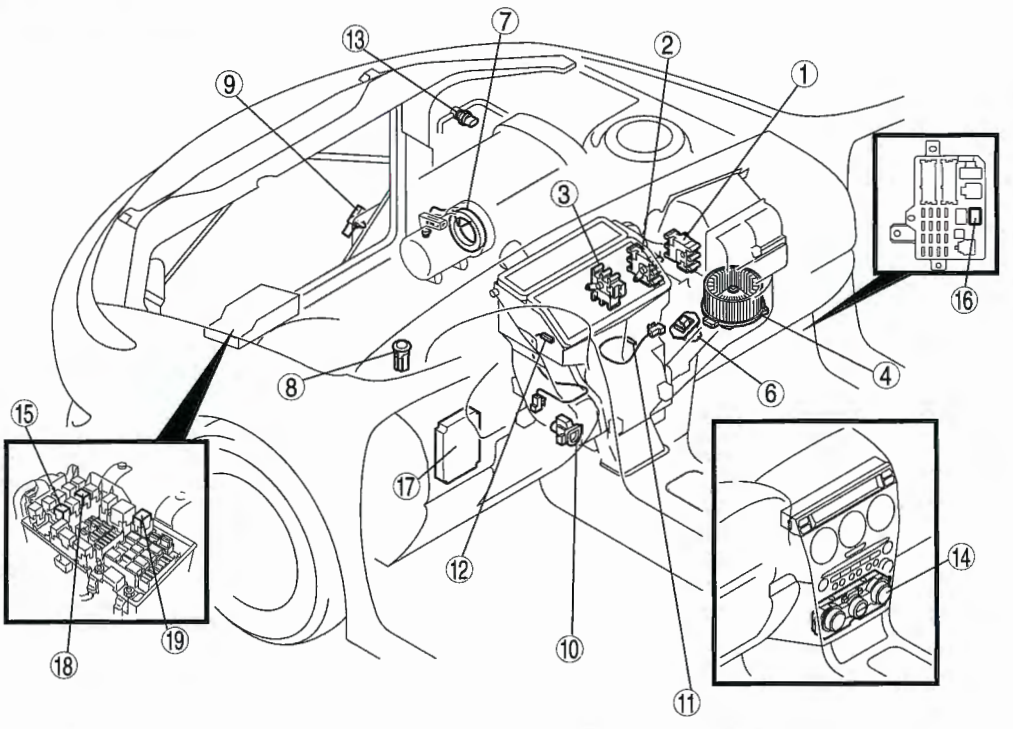

D6U740ZW7003

1	Air intake actuator (See 07–40–6 AIR INTAKE ACTUATOR REMOVAL/INSTALLATION [L3, AJ].) (See 07–40–7 AIR INTAKE ACTUATOR INSPECTION [L3, AJ].)
2	Air mix actuator (See 07–40–8 AIR MIX ACTUATOR REMOVAL/INSTALLATION [L3, AJ].) (See 07–40–9 AIR MIX ACTUATOR INSPECTION [L3, AJ].)
3	Airflow mode actuator (See 07–40–10 AIRFLOW MODE ACTUATOR REMOVAL/INSTALLATION [L3, AJ].) (See 07–40–11 AIRFLOW MODE ACTUATOR INSPECTION [L3, AJ].)
4	Blower motor (See 07–40–14 BLOWER MOTOR REMOVAL/INSTALLATION.) (See 07–40–14 BLOWER MOTOR INSPECTION.)
5	Resistor (See 07–40–14 RESISTOR REMOVAL/INSTALLATION.) (See 07–40–15 RESISTOR INSPECTION.)
6	PWM unit (See 07–40–15 PWM UNIT INSPECTION [L3, AJ].)
7	Magnetic clutch (See 07–40–16 MAGNETIC CLUTCH DISASSEMBLY/ASSEMBLY [L3, AJ].) (See 07–40–19 MAGNETIC CLUTCH ADJUSTMENT [L3, AJ].) (See 07–40–20 MAGNETIC CLUTCH INSPECTION [L3, AJ].)
8	Solar radiation sensor (See 07–40–21 SOLAR RADIATION SENSOR REMOVAL/INSTALLATION.) (See 07–40–21 SOLAR RADIATION SENSOR INSPECTION.)
9	Ambient temperature sensor (See 07–40–21 AMBIENT TEMPERATURE SENSOR REMOVAL/INSTALLATION.) (See 07–40–22 AMBIENT TEMPERATURE SENSOR INSPECTION [L3, AJ].)
10	Passenger compartment temperature sensor (See 07–40–23 PASSENGER COMPARTMENT TEMPERATURE SENSOR REMOVAL/INSTALLATION [L3, AJ].) (See 07–40–23 PASSENGER COMPARTMENT TEMPERATURE SENSOR INSPECTION [L3, AJ].)
11	Evaporator temperature sensor (See 07–40–24 EVAPORATOR TEMPERATURE SENSOR REMOVAL/INSTALLATION.) (See 07–40–24 EVAPORATOR TEMPERATURE SENSOR INSPECTION [L3, AJ].)
12	Water temperature sensor (See 07–40–25 WATER TEMPERATURE SENSOR REMOVAL/INSTALLATION [L3, AJ].) (See 07–40–26 WATER TEMPERATURE SENSOR INSPECTION [L3, AJ].)
13	Refrigerant pressure switch (See 07–40–27 REFRIGERANT PRESSURE SWITCH REMOVAL/INSTALLATION [L3, AJ].) (See 07–40–28 REFRIGERANT PRESSURE SWITCH INSPECTION [L3, AJ].)
14	Climate control unit (See 07–40–30 CLIMATE CONTROL UNIT REMOVAL [L3, AJ].) (See 07–40–30 CLIMATE CONTROL UNIT INSTALLATION [L3, AJ].) (See 07–40–31 CLIMATE CONTROL UNIT DISASSEMBLY/ASSEMBLY [L3, AJ].) (See 07–40–32 CLIMATE CONTROL UNIT WIRE ADJUSTMENT.) (See 07–40–33 CLIMATE CONTROL UNIT INSPECTION [L3, AJ].)
15	A/C relay (See 09–21–7 RELAY INSPECTION.)
16	Blower relay (See 09–21–7 RELAY INSPECTION.)
17	PCM (See 01–40A–9 PCM INSPECTION [L3].) (See 01–40C–6 PCM INSPECTION [AJ].)
18	Rear window defroster relay (See 09–21–7 RELAY INSPECTION.)
19	TNS relay (See 09–21–7 RELAY INSPECTION.)

CONTROL SYSTEM LOCATION INDEX [L3 WITH TC]

E6U074000000W02

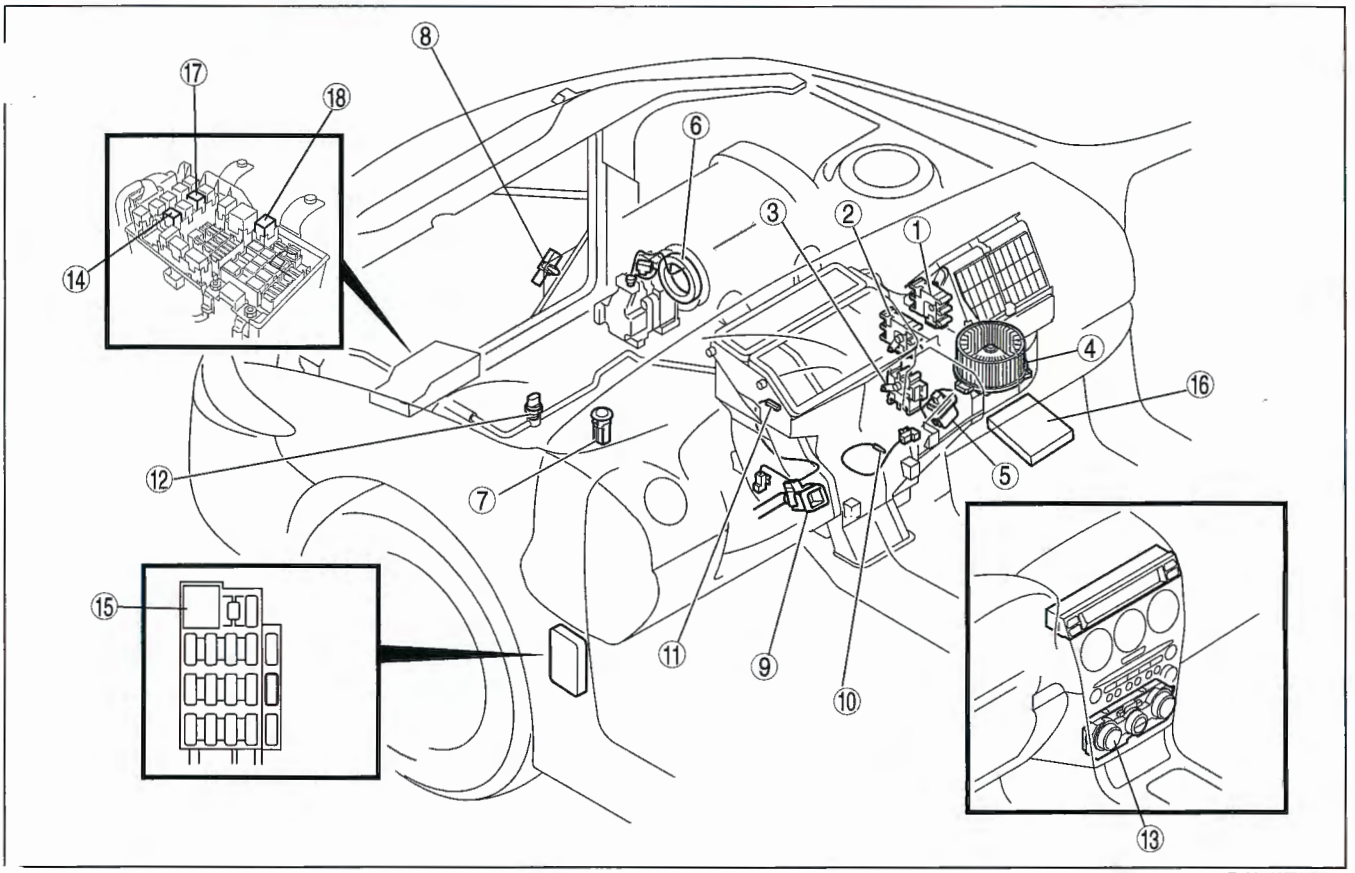

E6U740ZWB111

1	Air intake actuator (See 07–40–6 AIR INTAKE ACTUATOR REMOVAL/INSTALLATION [L3 WITH TC].) (See 07–40–7 AIR INTAKE ACTUATOR INSPECTION [L3 WITH TC].)
2	Air mix actuator (See 07–40–8 AIR MIX ACTUATOR REMOVAL/INSTALLATION [L3 WITH TC].) (See 07–40–10 AIR MIX ACTUATOR INSPECTION [L3 WITH TC].)
3	Airflow mode actuator (See 07–40–11 AIRFLOW MODE ACTUATOR REMOVAL/INSTALLATION [L3 WITH TC].) (See 07–40–13 AIRFLOW MODE ACTUATOR INSPECTION [L3 WITH TC].)
4	Blower motor (See 07–40–14 BLOWER MOTOR REMOVAL/INSTALLATION.) (See 07–40–14 BLOWER MOTOR INSPECTION.)
5	Power MOS FET (See 07–40–16 POWER METAL OXIDE SEMICONDUCTOR FIELD EFFECT TRANSISTOR (POWER MOS FET) REMOVAL/INSTALLATION [L3 WITH TC].) (See 07–40–16 POWER METAL OXIDE SEMICONDUCTOR FIELD EFFECT TRANSISTOR (POWER MOS FET) INSPECTION [L3 WITH TC].)
6	Magnetic clutch (See 07–40–17 MAGNETIC CLUTCH DISASSEMBLY/ASSEMBLY [L3 WITH TC].) (See 07–40–19 MAGNETIC CLUTCH ADJUSTMENT [L3 WITH TC].) (See 07–40–20 MAGNETIC CLUTCH INSPECTION [L3 WITH TC].)
7	Solar radiation sensor (See 07–40–21 SOLAR RADIATION SENSOR REMOVAL/INSTALLATION.) (See 07–40–21 SOLAR RADIATION SENSOR INSPECTION.)
8	Ambient temperature sensor (See 07–40–21 AMBIENT TEMPERATURE SENSOR REMOVAL/INSTALLATION.) (See 07–40–22 AMBIENT TEMPERATURE SENSOR INSPECTION [L3 WITH TC].)
9	Passenger compartment temperature sensor (See 07–40–23 PASSENGER COMPARTMENT TEMPERATURE SENSOR REMOVAL/INSTALLATION [L3 WITH TC].) (See 07–40–24 PASSENGER COMPARTMENT TEMPERATURE SENSOR INSPECTION [L3 WITH TC].)
10	Evaporator temperature sensor (See 07–40–24 EVAPORATOR TEMPERATURE SENSOR REMOVAL/INSTALLATION.) (See 07–40–25 EVAPORATOR TEMPERATURE SENSOR INSPECTION [L3 WITH TC].)
11	A/C water temperature sensor (See 07–40–25 A/C WATER TEMPERATURE SENSOR REMOVAL/INSTALLATION [L3 WITH TC].) (See 07–40–27 A/C WATER TEMPERATURE SENSOR INSPECTION [L3 WITH TC].)
12	Refrigerant pressure switch (See 07–40–28 REFRIGERANT PRESSURE SWITCH REMOVAL/INSTALLATION [L3 WITH TC].) (See 07–40–29 REFRIGERANT PRESSURE SWITCH INSPECTION [L3 WITH TC].)

13	Climate control unit (See 07–40–31 CLIMATE CONTROL UNIT REMOVAL/INSTALLATION [L3 WITH TC].) (See 07–40–32 CLIMATE CONTROL UNIT DISASSEMBLY/ASSEMBLY [L3 WITH TC].) (See 07–40–39 CLIMATE CONTROL UNIT INSPECTION [L3 WITH TC].)

14	A/C relay (See 09–21–7 RELAY INSPECTION.)
15	Blower relay (See 09–21–7 RELAY INSPECTION.)
16	PCM (See 01–40B–6 PCM INSPECTION [L3 WITH TC].)
17	Rear window defroster relay (See 09–21–7 RELAY INSPECTION.)
18	TNS relay (See 09–21–7 RELAY INSPECTION.)

AIR INTAKE ACTUATOR REMOVAL/INSTALLATION [L3, AJ]

E6U074061060W01

1. Disconnect the negative battery cable.
2. Remove the glove compartment.
3. Remove the duct (1). (See 07–11–5 A/C UNIT REMOVAL/INSTALLATION [L3, AJ].)
4. Remove in the order indicated in the table.

1	Air intake actuator connector
2	Air intake actuator

5. Install in the reverse order of removal.

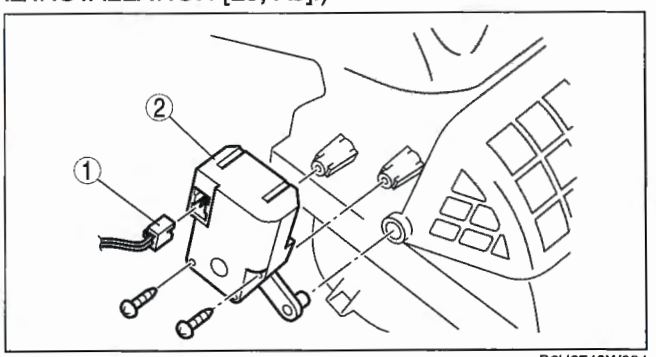

B6U0740W034

AIR INTAKE ACTUATOR REMOVAL/INSTALLATION [L3 WITH TC]

E6U074061060W03

1. Disconnect the negative battery cable.
2. Remove the glove compartment. (See 09–17–9 GLOVE COMPARTMENT REMOVAL/INSTALLATION.)
3. Remove the car navigation unit. (See 09–20–6 CAR-NAVIGATION UNIT REMOVAL/INSTALLATION.)
4. Remove in the order indicated in the table.

1	Air intake actuator connector
2	Air intake actuator

5. Install in the reverse order of removal.

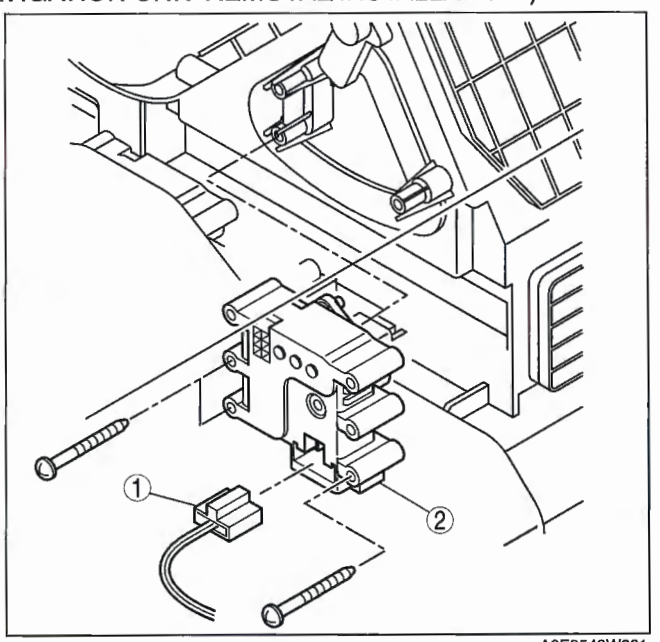

A6E8540W001

AIR INTAKE ACTUATOR INSPECTION [L3, AJ]

E6U074061060W02

1. Connect battery positive voltage to terminal G or H and ground to terminal H or G of the air intake actuator.
2. Verify that the air intake actuator operates as shown below.
   - If not as specified, replace the air intake actuator.

Connection		Movement
B+	GND	
G	H	RECIRCULATE ← FRESH
H	G	FRESH ← RECIRCULATE

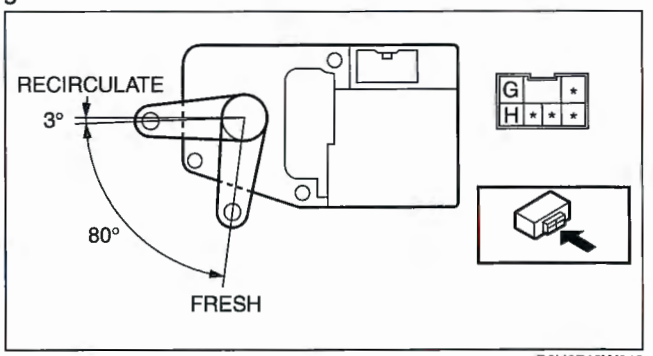

B6U0740W018

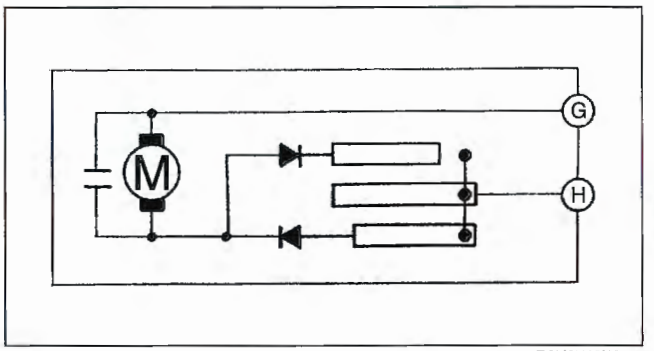

B6U0740W019

AIR INTAKE ACTUATOR INSPECTION [L3 WITH TC]

E6U074061060W04

1. Connect battery positive voltage to terminal D or F and ground to terminal F or D of the air intake actuator.
2. Verify that the air intake actuator operates as shown below.
   - If there is any malfunction, replace the air intake actuator.

Connection		Movement
B+	GND	
D	F	RECIRCULATE → FRESH
F	D	FRESH → RECIRCULATE

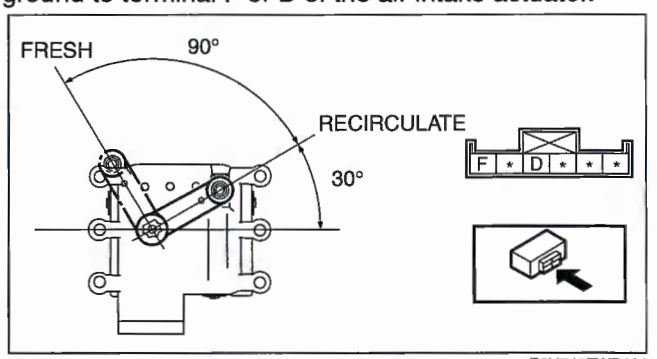

E6U740ZWB101

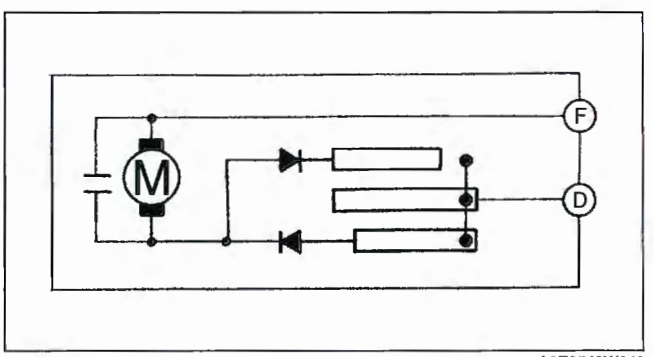

A6E8540W043

07–40

AIR MIX ACTUATOR REMOVAL/INSTALLATION [L3, AJ]

E6U074061415W01

1. Disconnect the negative battery cable.
2. Remove the glove compartment.
3. Remove in the order indicated in the table.

1	Air mix actuator connector
2	Air mix actuator

4. Install in the reverse order of removal.

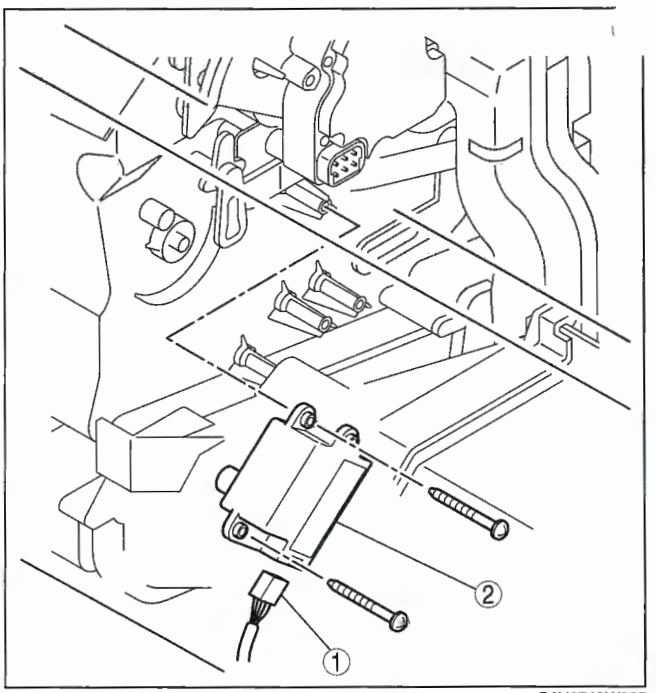

B6U0740W035

AIR MIX ACTUATOR REMOVAL/INSTALLATION [L3 WITH TC]

E6U074061415W03

1. Disconnect the negative battery cable.
2. Remove the following parts:
   (1) Glove compartment (See 09–17–9 GLOVE COMPARTMENT REMOVAL/INSTALLATION.)
   (2) Console (See 09–17–8 CONSOLE REMOVAL/INSTALLATION.)
   (3) Meter hood (See 09–17–6 METER HOOD REMOVAL/INSTALLATION.)
   (4) Instrument cluster (See 09–22–3 INSTRUMENT CLUSTER REMOVAL/INSTALLATION.)
   (5) Column cover (See 09–17–6 COLUMN COVER REMOVAL/INSTALLATION.)
   (6) Lower panel (See 09–17–7 LOWER PANEL REMOVAL/INSTALLATION.)
   (7) Steering shaft (See 06–12–7 STEERING WHEEL AND COLUMN REMOVAL/INSTALLATION.)
   (8) A-pillar trim (See 09–17–10 A-PILLAR TRIM REMOVAL/INSTALLATION.)
   (9) Front scuff plate (See 09–17–11 FRONT SCUFF PLATE REMOVAL/INSTALLATION.)
   (10)Front side trim (See 09–17–11 FRONT SIDE TRIM REMOVAL/INSTALLATION.)
   (11)Side panel (See 09–17–6 SIDE PANEL REMOVAL/INSTALLATION.)
3. Remove the dashboard. (See 09–17–4 DASHBOARD REMOVAL/INSTALLATION.)
4. Remove the A/C unit installation nuts. (See 07–11–7 A/C UNIT REMOVAL/INSTALLATION [L3 WITH TC].)
5. Remove the blower unit. (See 07–11–3 BLOWER UNIT REMOVAL/INSTALLATION [L3 WITH TC].)
6. Remove the duct (2).

7. Remove in the order indicated in the table.

1	Air mix actuator connector
2	Air mix actuator

8. Install in the reverse order of removal.

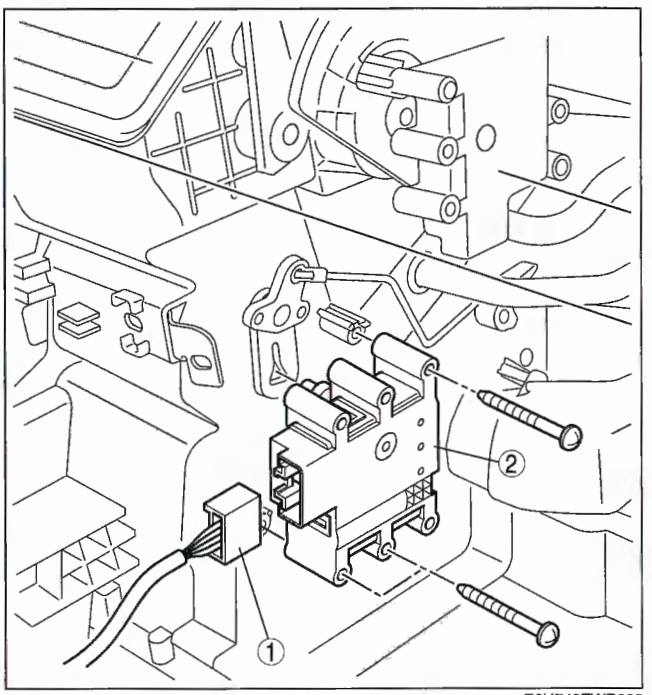

E6U740ZWB002

AIR MIX ACTUATOR INSPECTION [L3, AJ]

1. Verify that the resistance between the terminals of the air mix actuator is as shown in the table.
   - If not as specified, replace the air mix actuator.

Terminal	Resistance (ohm)
B—A	100
B—C	100
B—D	100
B—F	100

E6U074061415W02

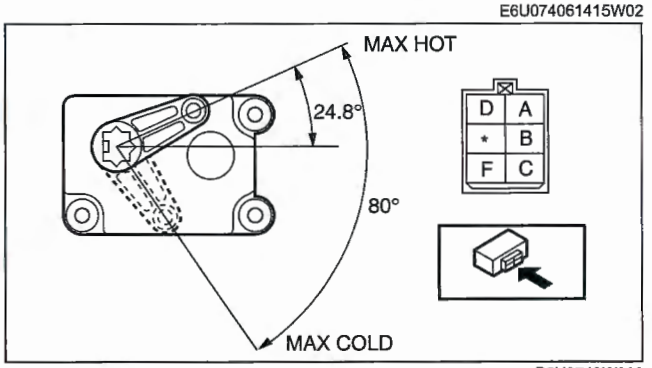

B6U0740W020

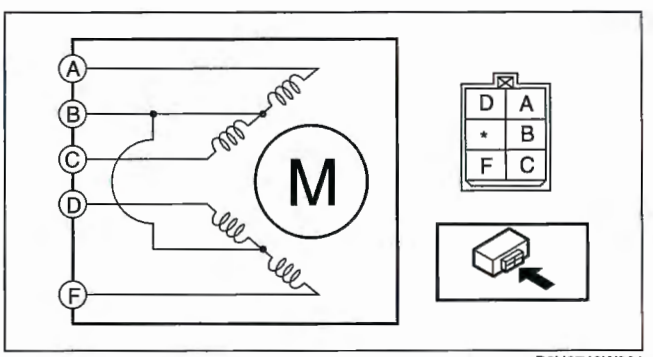

B6U0740W021

Reset Methods

- After replacing the air mix actuator, make sure to complete the following reset procedure.

Automatic reset

1. Disconnect the negative battery cable, and then reconnect it. (AUTO switch indicator light flashes.)

Controlled reset

Switch to on-board diagnostic mode. (See 07–02–4 DIAGNOSTIC TROUBLE CODE NUMBER INSPECTION [L3, AJ].)

2. While in present failure indication mode, press the DEFROSTER switch for **3 s** or more. (AUTO switch indicator light flashes.)

AIR MIX ACTUATOR INSPECTION [L3 WITH TC]

E6U074061415W04

1. Connect battery positive voltage to terminal D or F and ground to terminal F or D of the air mix actuator.
2. Verify that the air mix actuator operates as shown below.
   - If there is any malfunction, replace the air mix actuator.

Connection		Movement
B+	GND	
D	F	HOT → COLD
F	D	COLD → HOT

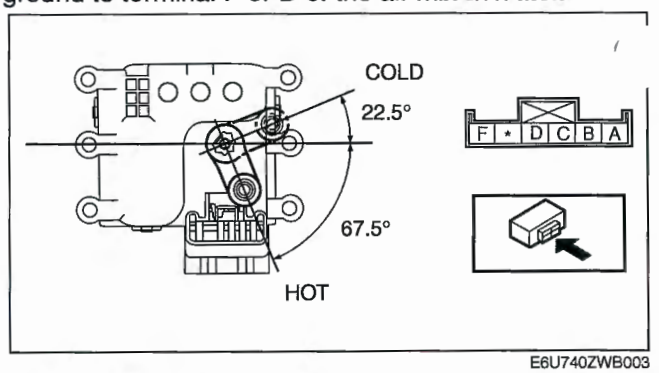

E6U740ZWB003

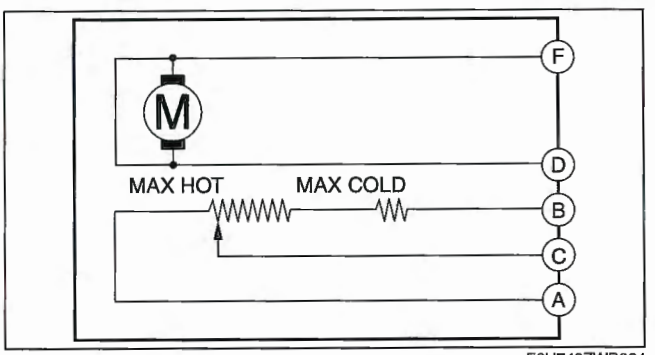

E6U740ZWB004

3. Verify that the resistance between the terminals of the air mix actuator are as shown in the graph.
   - If there is any malfunction, replace the air mix actuator.

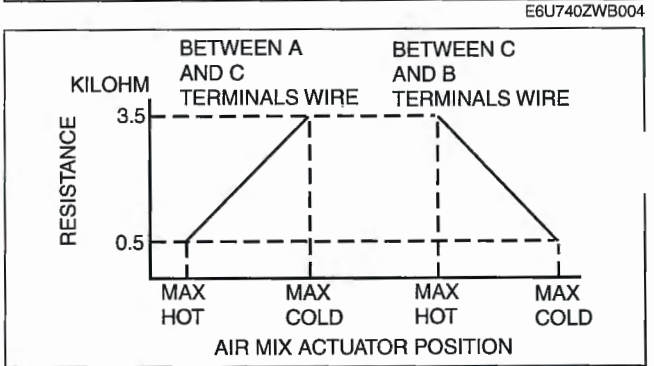

E6U740ZWB102

AIRFLOW MODE ACTUATOR REMOVAL/INSTALLATION [L3, AJ]

E6U074061070W01

1. Disconnect the negative battery cable.
2. Remove the glove compartment.
3. Remove in the order indicated in the table.

1	Airflow mode actuator connector
2	Airflow mode actuator

4. Install in the reverse order of removal.

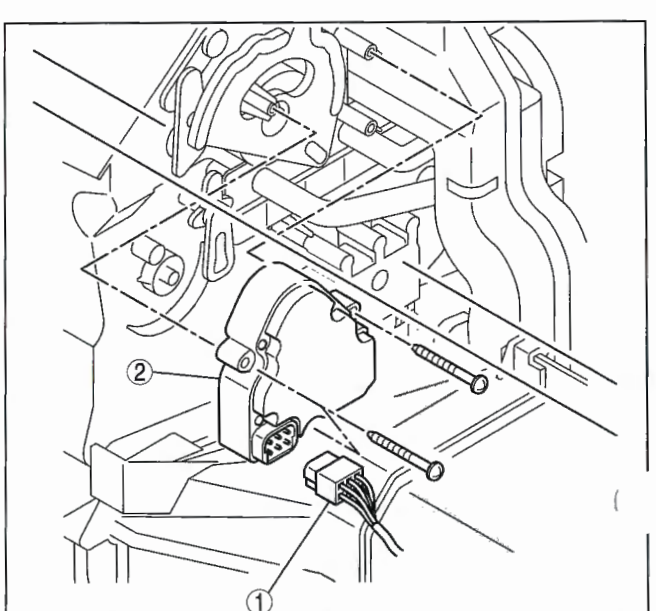

B6U0740W036

AIRFLOW MODE ACTUATOR REMOVAL/INSTALLATION [L3 WITH TC]

E6U074061070W03

1. Disconnect the negative battery cable.
2. Remove the glove compartment. (See 09–17–9 GLOVE COMPARTMENT REMOVAL/INSTALLATION.)
   Remove the car navigation unit. (See 09–20–6 CAR-NAVIGATION UNIT REMOVAL/INSTALLATION.)
3. Remove in the order indicated in the table.

1	Airflow mode actuator connector
2	Airflow mode actuator

5. Install in the reverse order of removal.

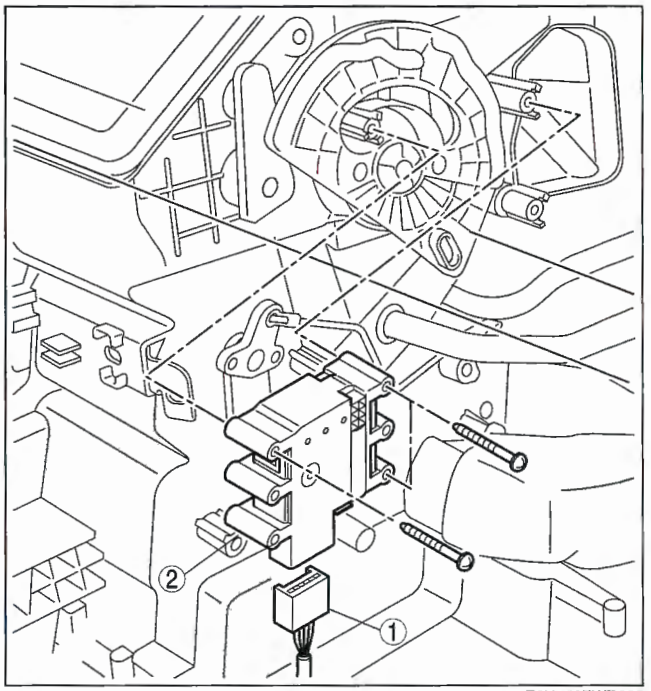

E6U740ZWB005

AIRFLOW MODE ACTUATOR INSPECTION [L3, AJ]

E6U074061070W02

Full-auto Air Conditioner

Connect battery positive voltage to terminal E or F and ground to terminal F or E of the airflow mode actuator.

3. Verify that the airflow mode actuator operates as shown below.
   - If not as specified, replace the airflow mode actuator.

Connection		Movement
B+	GND	
E	F	VENT → DEFROSTER
F	E	DEFROSTER → VENT

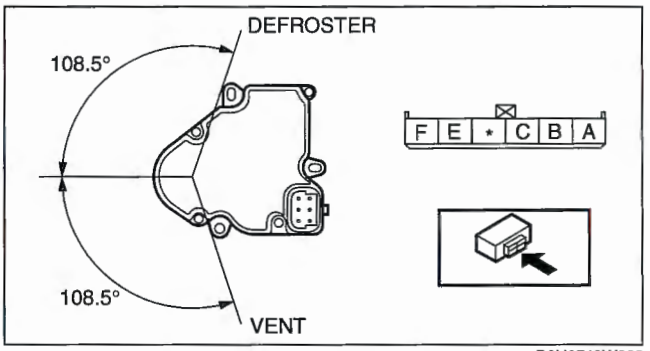

B6U0740W022

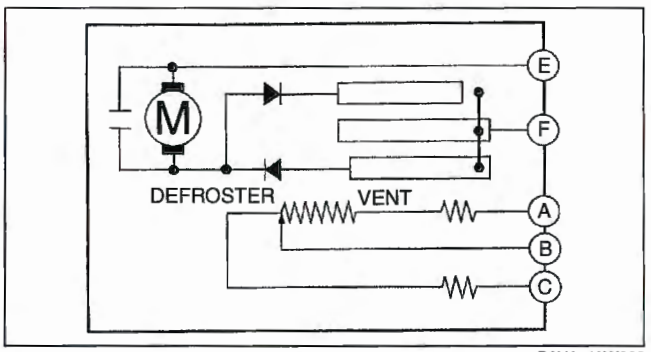

B6U0740W023

3. Verify that the resistance between the terminals of the airflow mode actuator is as shown in the graph.
   - If not as specified, replace the airflow mode actuator.

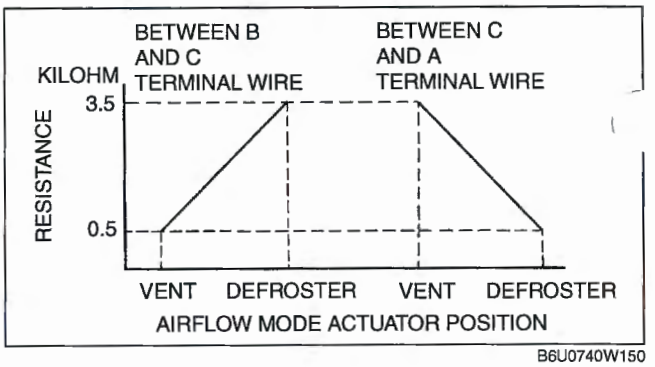

B6U0740W150

Manual Air Conditioner
Operating inspection

1. Turn the fan switch to OFF.
2. Turn the mode dial to VENT.
3. Turn the ignition switch to ON position. (engine ON)
4. Turn the fan switch 4th position.
5. Turn the mode dial from VENT to DEFROSTER.
6. Verify that the airflow mode actuator moves smoothly.
   - If not as specified, inspect the airflow mode main link and sub link for clogging and deformity.
   - If the actuator cannot move at all, go to voltage inspection.

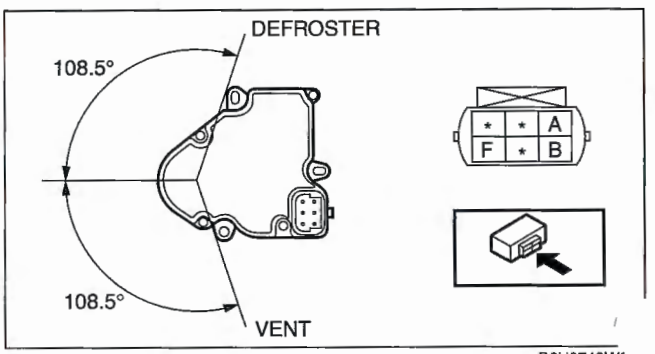

B6U0740W0

Voltage inspection

1. Turn the ignition switch to ON position. (engine OFF)
2. Verify that the voltage between the terminals of airflow mode actuator (harness-side) is as shown in the table.
   - If not as specified, perform the harness inspection and mode switch inspection. (See 07–40–38 Manual Air Conditioner.)
   - If as specified, replace the airflow mode actuator.

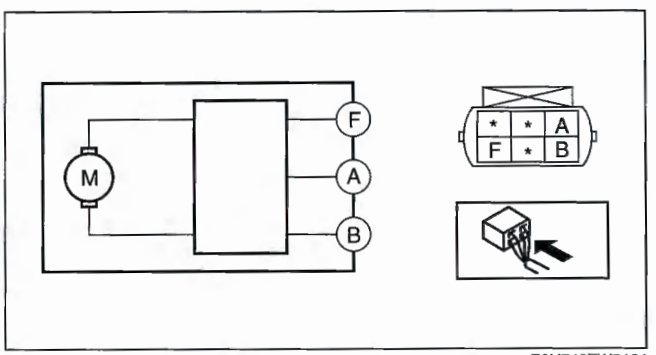

E6U740ZW5101

Mode dial position	Terminal	Voltage (V)
-	B—GND	0
-	B—F	B+
VENT	A—F	0
BI-LEVEL		3
HEAT		6
HEAT/DEF		9
DEFROSTER		12

AIRFLOW MODE ACTUATOR INSPECTION [L3 WITH TC]

E6U074061070W04

1. Connect battery positive voltage to terminal D or F and ground to terminal F or D of the airflow mode actuator.
2. Verify that the airflow mode actuator operates as shown below.
   - If there is any malfunction, replace the airflow mode actuator.

Connection		Movement
B+	GND	
D	F	DEFROSTER → VENT
F	D	VENT → DEFROSTER

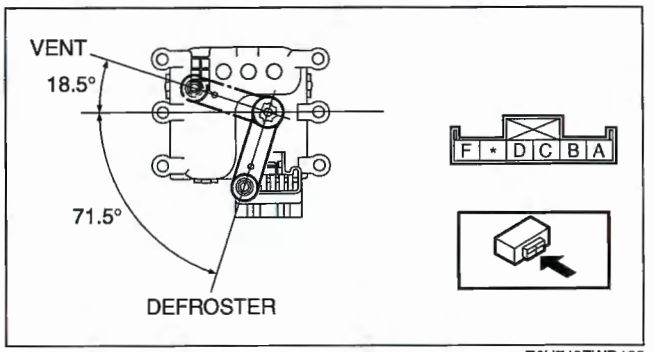

E6U740ZWB103

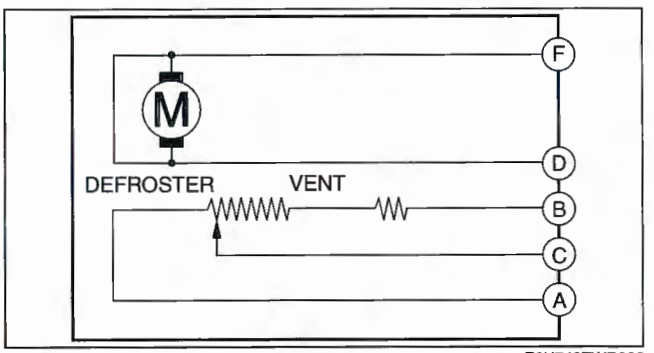

E6U740ZWB006

3. Verify that the resistance between the terminals of the airflow mode actuator is as shown in the graph.
   - If there is any malfunction, replace the airflow mode actuator.

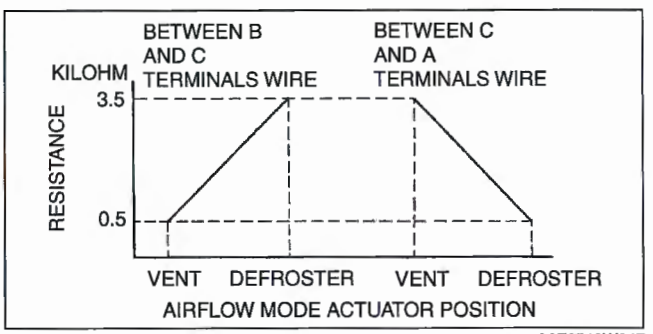

A6E8540W047

BLOWER MOTOR REMOVAL/INSTALLATION

E6U074061020W01

1. Disconnect the negative battery cable.
2. Remove in the order indicated in the table.

1	Blower motor connector
2	Blower motor

3. Install in the reverse order of removal.

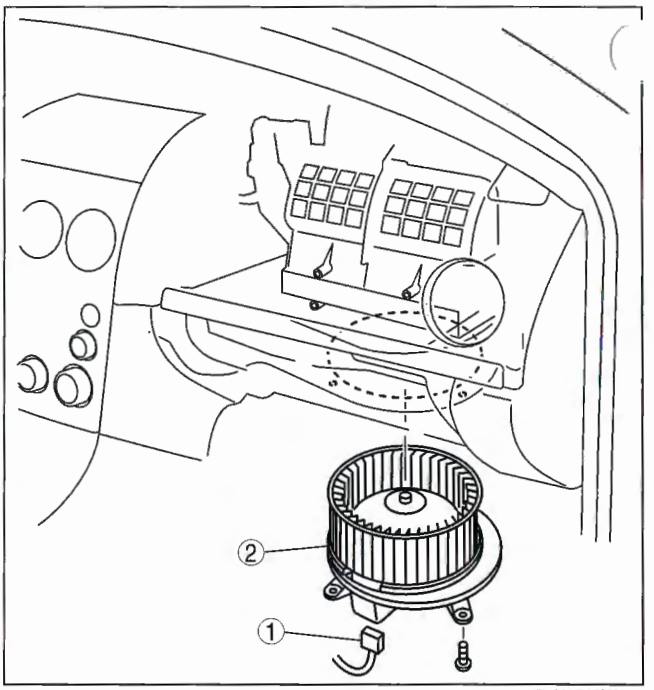

B6U0740W038

BLOWER MOTOR INSPECTION

E6U074061020W02

1. Connect battery positive voltage to terminal B and ground to terminal A of the blower motor and verify its operation.
   - If not as specified, replace the blower motor.

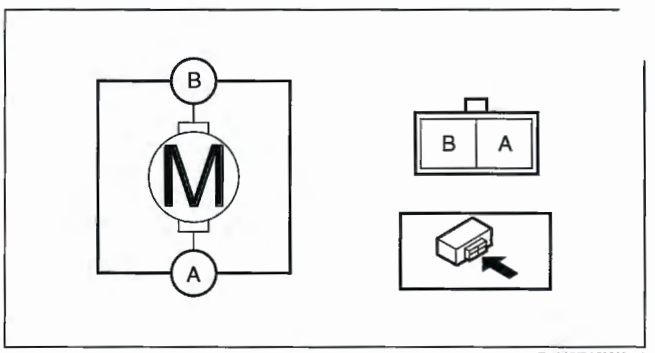

B6U0740W031

RESISTOR REMOVAL/INSTALLATION

E6U074061015W01

1. Disconnect the negative battery cable.
2. Remove the glove compartment.
3. Remove in the order indicated in the table.

1	Resistor connector
2	Resistor

4. Install in the reverse order of removal.

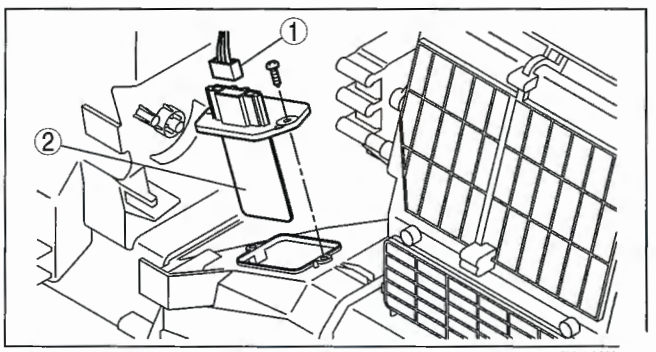

A6E8540W

RESISTOR INSPECTION

E6U074061015W02

1. Verify that the resistance between the terminals of the resistor is as shown in the table.
   - If not as specified, replace the resistor.

Terminal	Resistance (ohm)
A—D	0.25
A—B	0.85
A—C	2.70

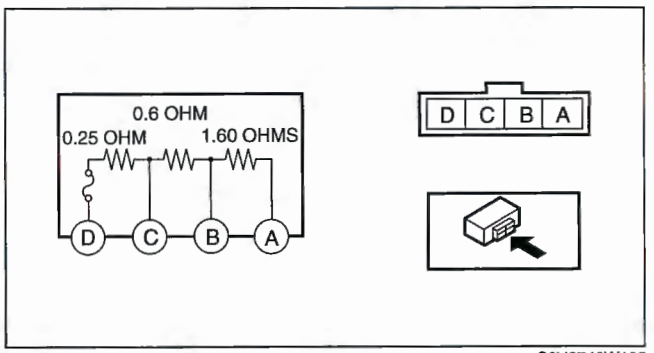

C6U0740W105

PWM UNIT INSPECTION [L3, AJ]

E6U074000116W01

1. Connect the PWM unit connector.
2. Turn the ignition switch to ON position.
3. Measure the voltage at each PWM unit terminal and refer to the terminal voltage list.
   - If not as specified, inspect the parts listed under "Action" and the related wiring harness.

Terminal Voltage List (Reference)

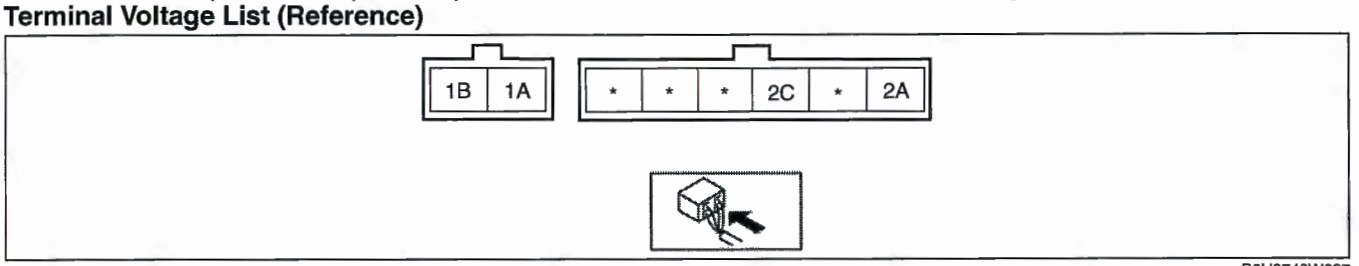

B6U0740W027

Terminal	Signal	Connected to	Test condition	Voltage (V)	Action
1A	IG2	Blower relay	Ignition switch at ON position	B+	• Inspect for continuity or short circuit (PWM unit—blower relay: 1A—C) • Inspect blower relay
			Ignition switch at LOCK position	Below 1.0	
1B	GND	Ground	Under any condition	Below 1.0	• Inspect for continuity (PWM unit—ground: 1B—GND)
2A	Blower fan speed	Climate control unit	Fan speed: 1—7	Pulse*	• Inspect for continuity or short circuit (PWM unit—climate control unit: 2A—1C) • Inspect climate control unit
2B	—	—	—	—	—
2C	Motor operation	Blower motor	Fan off	B+	• Inspect for continuity or short circuit (PWM unit—blower motor: 2C—A) • Inspect blower motor
			Fan speed 1	8—10	
			Fan speed 2	6—8	
			Fan speed 3	5—6	
			Fan speed 4	3—5	
			Fan speed 5	1—3	
			Fan speed 6	0.7—1	
			Fan speed 7	0.7—1	
2D	—	—	—	—	—
2E	—	—	—	—	—
2F	—	—	—	—	—

*: Refer to climate control unit terminal 1C (Figure 1). (See 07–40–33 CLIMATE CONTROL UNIT INSPECTION [L3, AJ] .)

POWER METAL OXIDE SEMICONDUCTOR FIELD EFFECT TRANSISTOR (POWER MOS FET) REMOVAL/INSTALLATION [L3 WITH TC]

E6U074000116W02

1. Disconnect the negative battery cable.
2. Remove the glove compartment. (See 09–17–9 GLOVE COMPARTMENT REMOVAL/INSTALLATION.)
3. Remove the car navigation unit. (See 09–20–6 CAR-NAVIGATION UNIT REMOVAL/INSTALLATION.)
4. Remove in the order indicated in the table.

1	Power MOS FET connector
2	Power MOS FET

5. Install in the reverse order of removal.

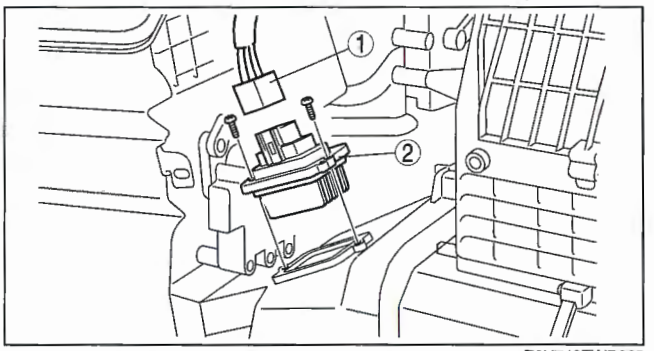

E6U740ZWB008

POWER METAL OXIDE SEMICONDUCTOR FIELD EFFECT TRANSISTOR (POWER MOS FET) INSPECTION [L3 WITH TC]

E6U074000116W03

1. Verify that the resistance between the terminals of the power MOS FET is as shown in the table.
   - If there is any malfunction, replace the power MOS FET.

Tester lead		Resistance (kilohm)
+	–	
A	B	∞
A	E	6.9
B	A	Continuity
B	E	Continuity
E	A	6.9
E	B	∞

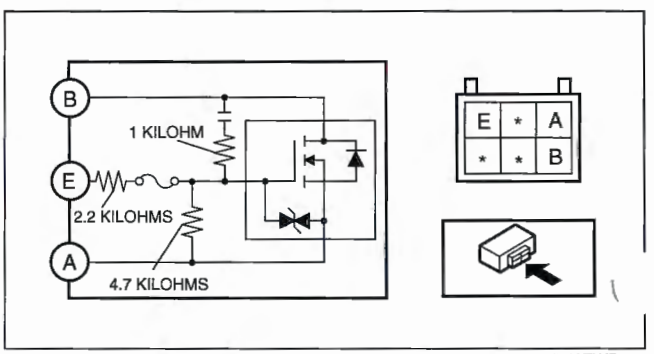

E6U740ZWB104

MAGNETIC CLUTCH DISASSEMBLY/ASSEMBLY [L3, AJ]

E6U074061010W01

1. Disassemble in the order indicated in the table.

1	Bolt (See 07–40–17 Bolt Removal/Installation Note.)
2	Pressure plate
3	Shim
4	Snap ring (See 07–40–17 Snap Ring Installation Note.)
5	A/C compressor pulley
6	Screw
7	Stator
8	A/C compressor body

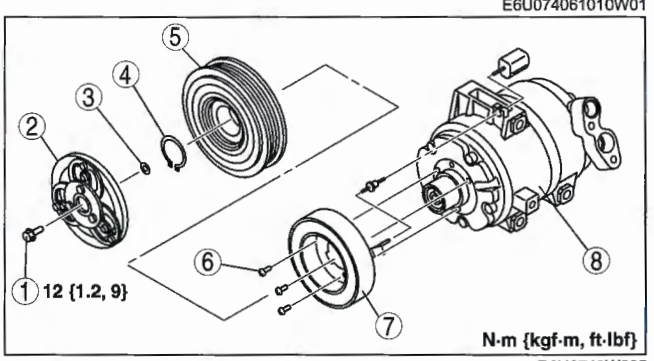

B6U0740W025

2. Assemble in the reverse order of disassembly.
3. Adjust the magnetic clutch clearance. (See 07–40–19 MAGNETIC CLUTCH ADJUSTMENT [L3, AJ].)

Bolt Removal/Installation Note

1. When removing or installing the bolt, hold the pressure plate in place as shown in the figure. When installing a new A/C compressor body, replace the bolt.

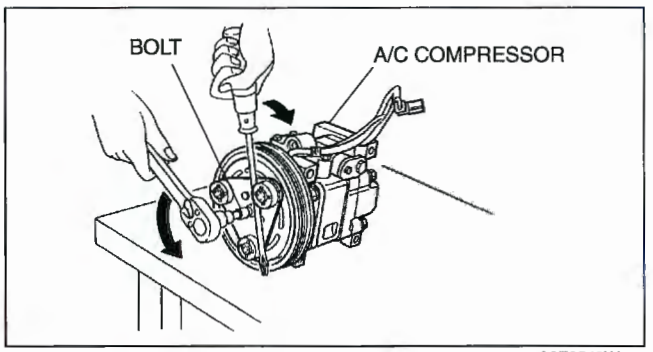

A6E8540W048

Snap Ring Installation Note

1. When installing a new pressure plate, A/C compressor pulley, stator, or A/C compressor body, replace the snap ring.

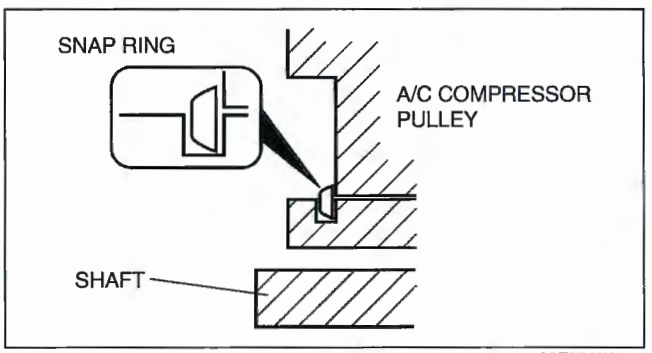

A6E8540W050

MAGNETIC CLUTCH DISASSEMBLY/ASSEMBLY [L3 WITH TC]

E6U074061010W04

1. Disassemble in the order indicated in the table.

1	Bolt (See 07–40–18 Bolt Removal/Installation Note.)
2	Pressure plate
3	Shim
4	Snap ring (See 07–40–18 Snap Ring Installation Note.)
5	A/C compressor pulley
6	Screw (See 07–40–18 Screw Installation Note.)
7	Clamp (See 07–40–18 Clamp Installation Note.)
8	Screw (See 07–40–18 Screw Installation Note.)
9	Stator and thermal protector (See 07–40–18 Stator and Thermal Protector Removal Note.) (See 07–40–18 Stator and Thermal Protector Installation Note.)
10	A/C compressor body

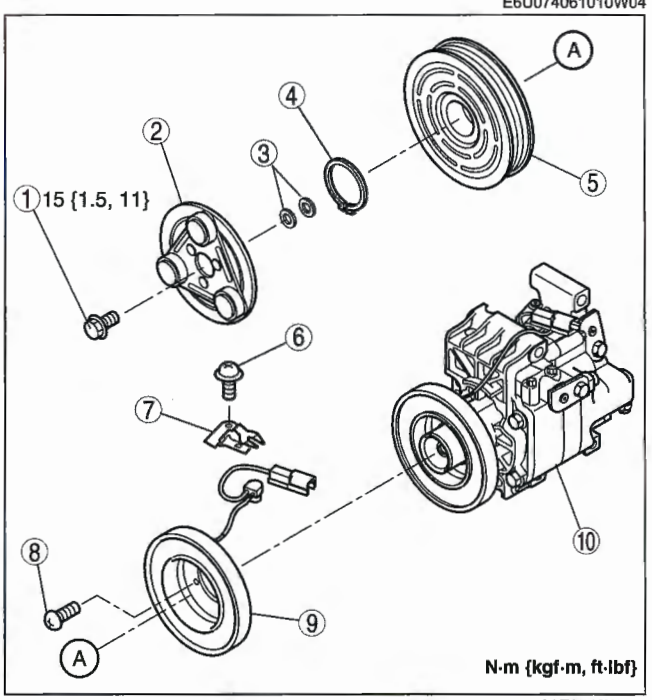

A6E8540W014

2. Assemble in the reverse order of disassembly.
3. Adjust the magnetic clutch clearance. (See 07–40–19 MAGNETIC CLUTCH ADJUSTMENT [L3 WITH TC].)

Bolt Removal/Installation Note

1. When removing or installing the bolt, hold the pressure plate in place as shown in the figure.
2. When installing a new A/C compressor body, replace the bolt.

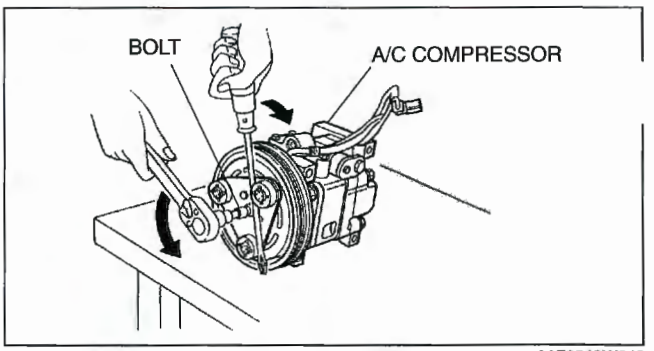

A6E8540W048

Stator and Thermal Protector Removal Note

1. After removing the stator and thermal protector, completely remove the silicone adhering to the A/C compressor side.

Stator and Thermal Protector Installation Note

1. Apply **approx. 1 g {0.04 oz}** of silicone (Shin-Etsu Silicone KE-347W or similar) to the contact surface of the thermal protector, then thoroughly install it onto the A/C compressor, leaving no gaps.

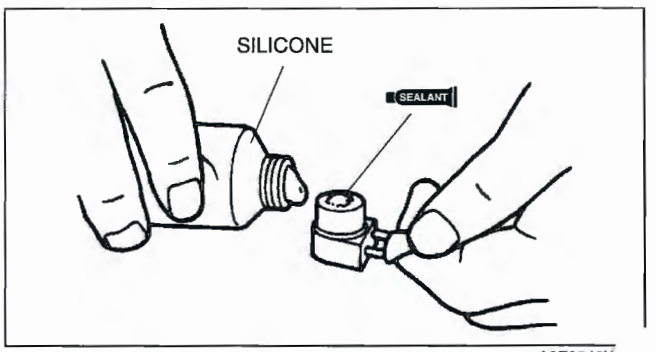

A6E8540V

Screw Installation Note

1. When installing a new stator and thermal protector, replace the screw.

Clamp Installation Note

1. When installing a new stator and thermal protector, replace the clamp.

Snap Ring Installation Note

1. When installing a new pressure plate, A/C compressor pulley, stator, or A/C compressor body, replace the snap ring.

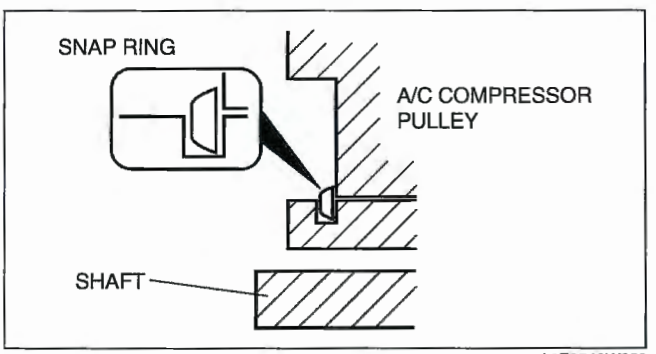

A6E8540W050

MAGNETIC CLUTCH ADJUSTMENT [L3, AJ]

1. Measure the clearance around the entire circumference between the pressure plate and A/C compressor pulley using a thickness gauge.

E6U074061010W02

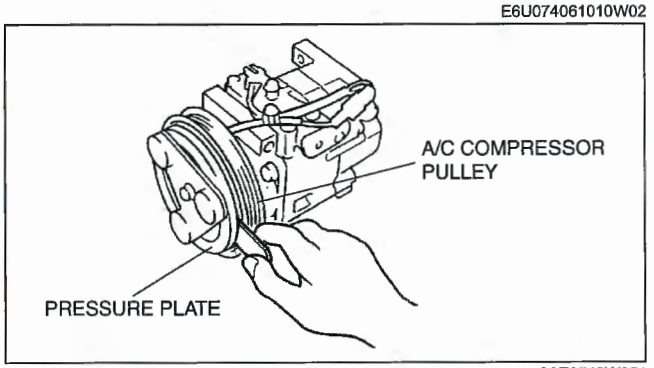

A6E8540W051

2. Verify that the clearance is within the specification.
   - If not within the specification, remove the pressure plate and adjust the clearance by changing the shim (**0.2 mm {0.008 in}, 0.5 mm {0.02 in}**) or the number of shims.

   Magnetic clutch clearance
   0.3—0.6 mm {0.012—0.023 in}

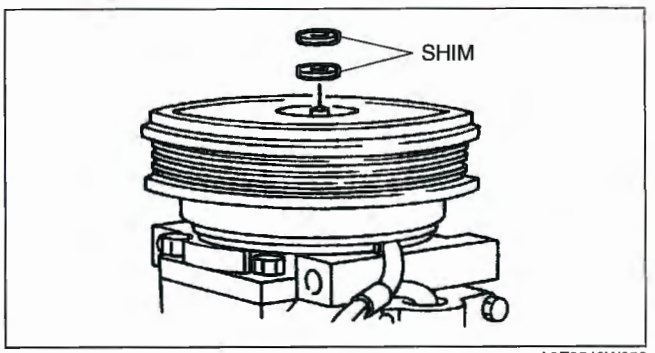

A6E8540W052

07–40

MAGNETIC CLUTCH ADJUSTMENT [L3 WITH TC]

1. Measure the clearance around the entire circumference between the pressure plate and A/C compressor pulley using a thickness gauge.

E6U074061010W05

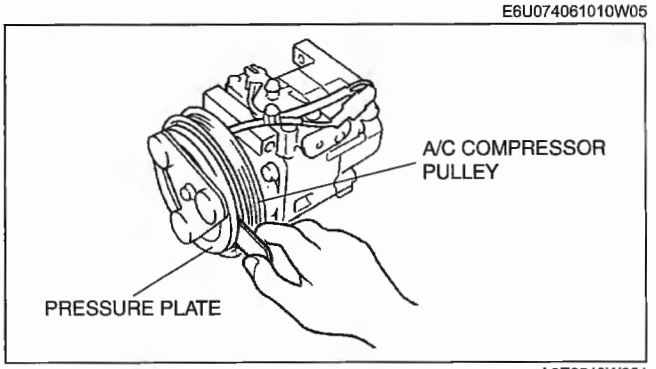

A6E8540W051

2. Verify that the clearance is within the specification.
   - If not within the specification, remove the pressure plate and adjust the clearance by changing the shim (**0.2 mm {0.008 in}, 0.5 mm {0.02 in}**) or the number of shims.

   Magnetic clutch clearance
   0.3—0.5 mm {0.012—0.019 in}

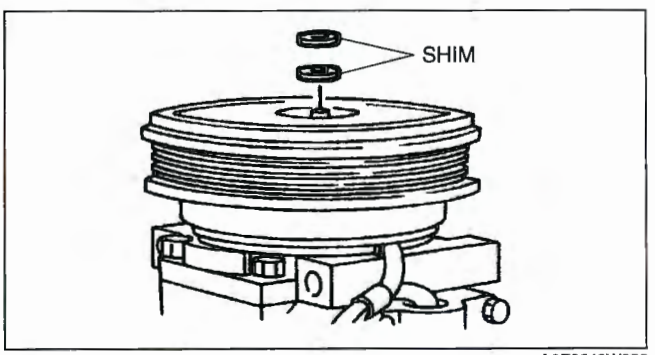

A6E8540W052

MAGNETIC CLUTCH INSPECTION [L3, AJ]

1. Connect battery positive voltage to terminal A of magnetic clutch and ground to A/C compressor body.

E6U074061010W03

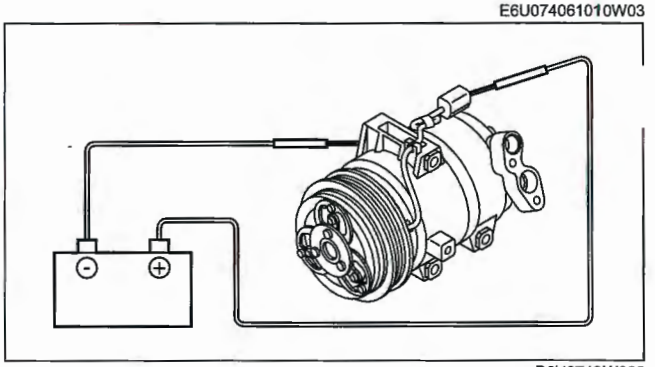

B6U0740W028

2. Verify that the magnetic clutch operates.
   - If not as specified, replace the stator.

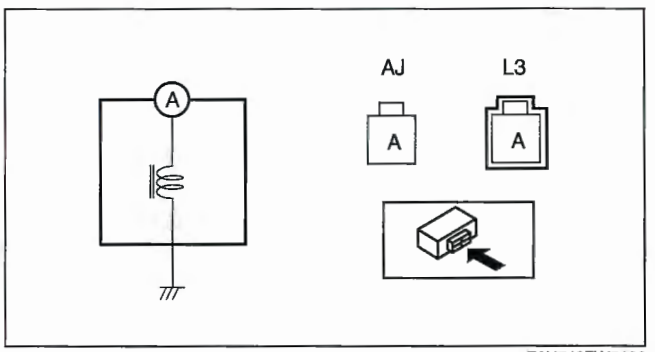

E6U740ZW5102

MAGNETIC CLUTCH INSPECTION [L3 WITH TC]

1. Connect battery positive voltage to terminal A of magnetic clutch and ground to A/C compressor body.

E6U074061010W06

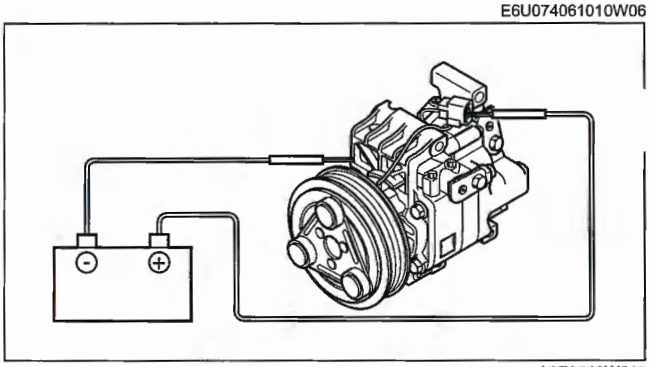

A6E8540W015

2. Verify that the magnetic clutch operates.
   - If there is any malfunction, replace the stator and thermal protector.

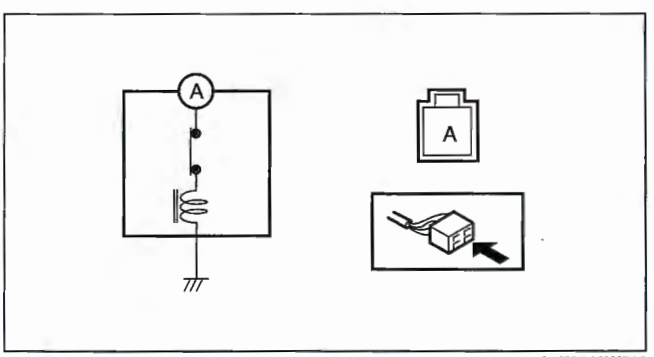

A6E8540W016

SOLAR RADIATION SENSOR REMOVAL/INSTALLATION

E6U074061751W01

1. Disconnect the negative battery cable.
2. Remove the solar radiation sensor from the dashboard using a tape-wrapped flathead screwdriver.
3. Install in the reverse order of removal.

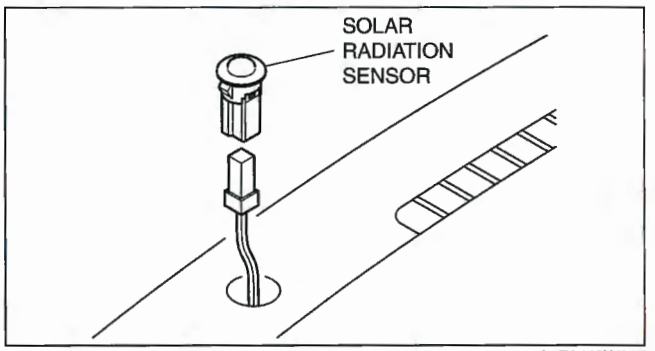

A6E8540W017

SOLAR RADIATION SENSOR INSPECTION

E6U074061751W02

1. Shine an incandescent light (**60 W**) on the solar radiation sensor from a distance of **approx. 100 mm {3.94 in}**.
2. Connect positive (+) lead to terminal A and negative (–) lead to terminal B of the solar radiation sensor.
   - If the output voltage is not **over 0.02V and not less 0.45 V**, replace the solar radiation sensor.

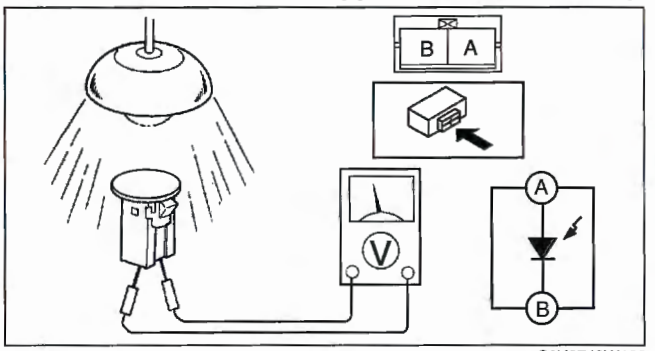

C6U0740W106

AMBIENT TEMPERATURE SENSOR REMOVAL/INSTALLATION

E6U074061764W01

Disconnect the negative battery cable.
2. Remove the radiator grille. (See 09–16–3 RADIATOR GRILLE REMOVAL/INSTALLATION.)
3. Remove in the order indicated in the table.

1	Ambient temperature sensor connector
2	Ambient temperature sensor

4. Install in the reverse order of removal.

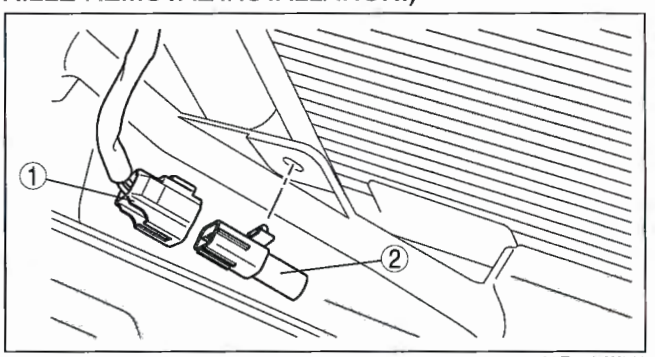

A6E8540W018

AMBIENT TEMPERATURE SENSOR INSPECTION [L3, AJ]

E6U074061764W02

1. Measure the temperature around the ambient temperature sensor.
2. Measure the resistance between terminals of the ambient temperature sensor.
   - If the resistance is not as shown in the graph, replace the ambient temperature sensor.

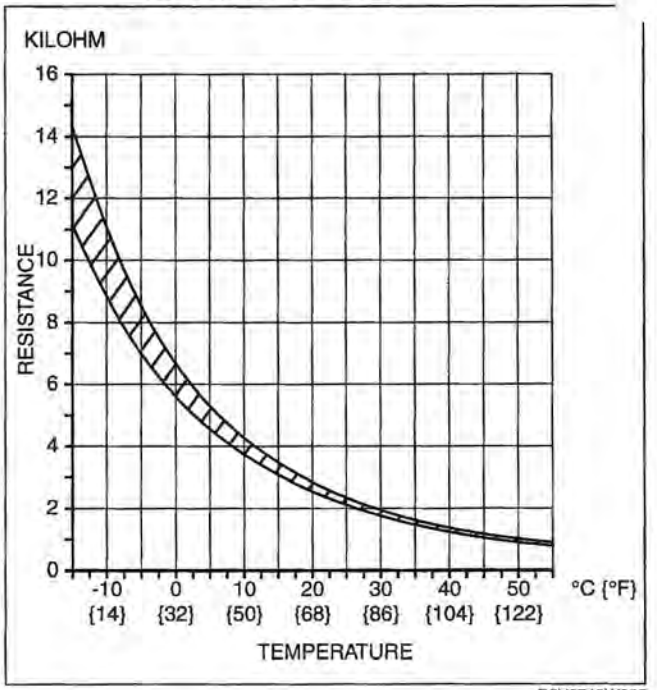

B6U0740W005

AMBIENT TEMPERATURE SENSOR INSPECTION [L3 WITH TC]

E6U074061764W03

1. Measure the temperature around the ambient temperature sensor.
2. Measure the resistance between terminals of the ambient temperature sensor.
   - If the resistance is not as shown in the graph, replace the ambient temperature sensor.

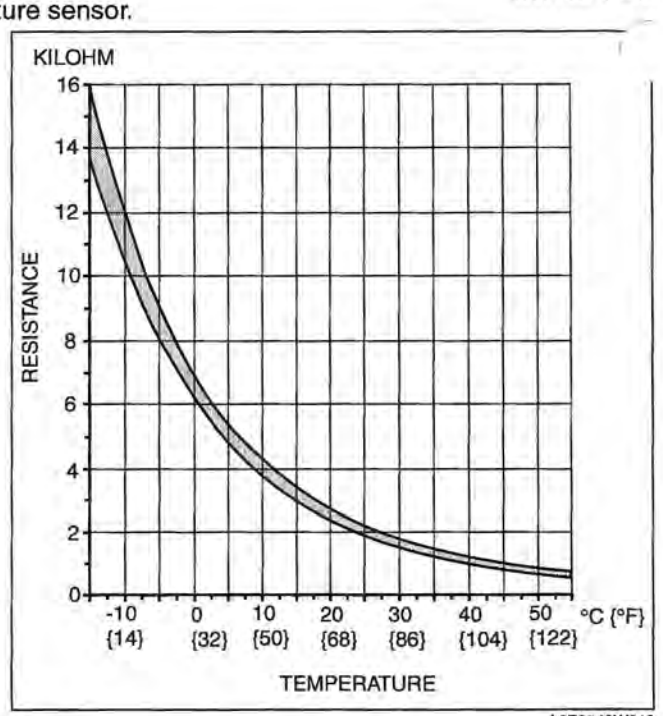

A6E8540W019

PASSENGER COMPARTMENT TEMPERATURE SENSOR REMOVAL/INSTALLATION [L3, AJ]

E6U074061758W01

1. Disconnect the negative battery cable.
2. Remove the lower panel. (See 09–17–7 LOWER PANEL REMOVAL/INSTALLATION.)
   Remove in the order indicated in the table.

1	Air hose
2	Passenger compartment temperature sensor connector
3	Passenger compartment temperature sensor

4. Install in the reverse order of removal.

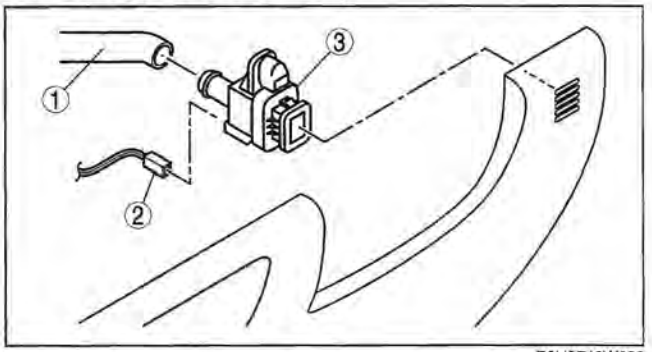

B6U0740W029

PASSENGER COMPARTMENT TEMPERATURE SENSOR REMOVAL/INSTALLATION [L3 WITH TC]

E6U074061758W03

1. Disconnect the negative battery cable.
2. Remove the lower panel. (See 09–17–7 LOWER PANEL REMOVAL/INSTALLATION.)
3. Remove the cowl grille. (See 09–16–4 COWL GRILLE REMOVAL/INSTALLATION [L3 WITH TC].)
4. Remove in the order indicated in the table.

1	Air hose
2	Passenger compartment temperature sensor connector
3	Passenger compartment temperature sensor

5. Install in the reverse order of removal.

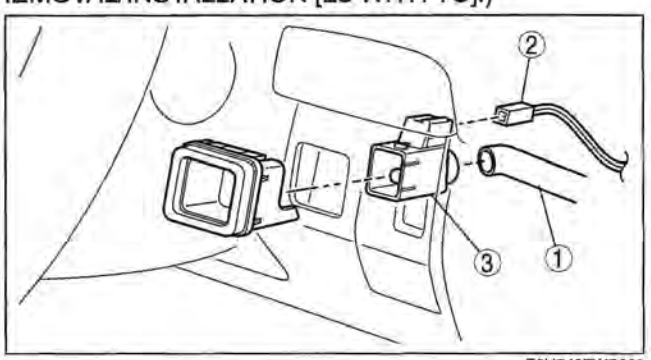

E6U740ZWB009

07–40

PASSENGER COMPARTMENT TEMPERATURE SENSOR INSPECTION [L3, AJ]

E6U074061758W02

1. Measure the temperature around the passenger compartment temperature sensor.
2. Measure the resistance between terminals of the passenger compartment temperature sensor.
   - If the resistance is not as shown in the graph, replace the passenger compartment temperature sensor.

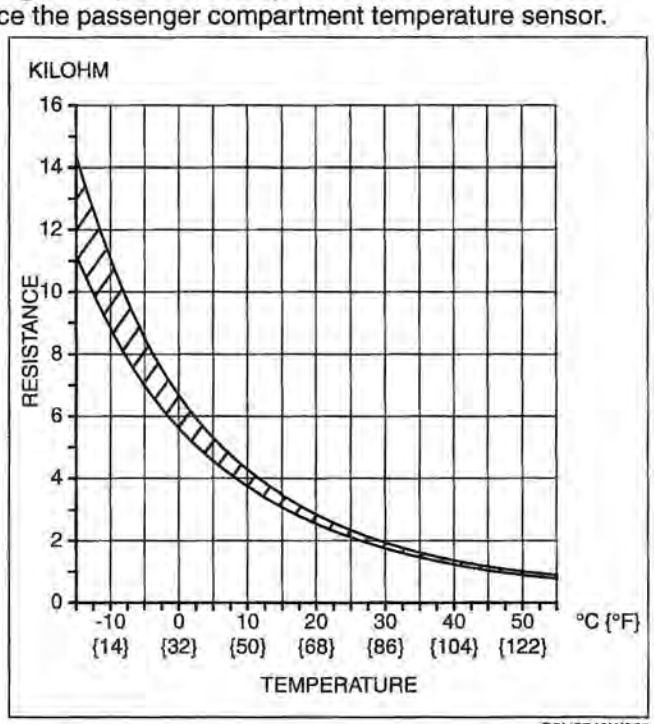

B6U0740W005

PASSENGER COMPARTMENT TEMPERATURE SENSOR INSPECTION [L3 WITH TC]

E6U074061758W04

1. Measure the temperature around the passenger compartment temperature sensor.
2. Measure the resistance between terminals of the passenger compartment temperature sensor.
   - If the resistance is not as shown in the graph, replace the passenger compartment temperature sensor.

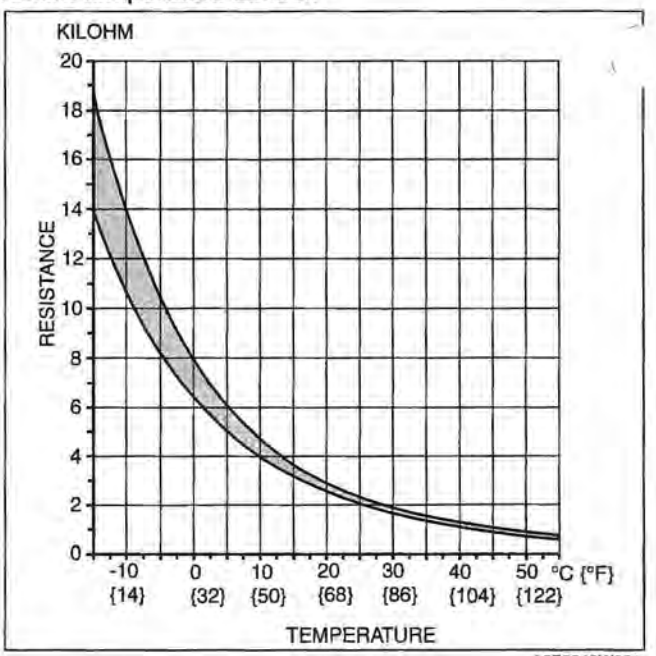

A6E8540W021

EVAPORATOR TEMPERATURE SENSOR REMOVAL/INSTALLATION

E6U074061022W01

1. Remove the evaporator temperature sensor from the A/C unit. (See 07–11–8 A/C UNIT DISASSEMBLY/ ASSEMBLY [L3, AJ].) (See 07–11–10 A/C UNIT DISASSEMBLY/ASSEMBLY [L3 WITH TC].)

EVAPORATOR TEMPERATURE SENSOR INSPECTION [L3, AJ]

E6U074061022W02

1. Turn the AUTO switch on. (Full-auto air conditioner)
2. Set the temperature control to MAX COLD.
3. Push the A/C switch.
4. Set the RECIRCULATE mode.
5. Close all doors and windows.
6. Wait for **5 min**.
7. Remove the glove compartment.
8. Disconnect the evaporator temperature sensor.
9. Measure the temperature at the blower inlet.
10. Measure the resistance between terminals of the evaporator temperature sensor.
    - If the resistance is not as shown in the graph, replace the evaporator temperature sensor.

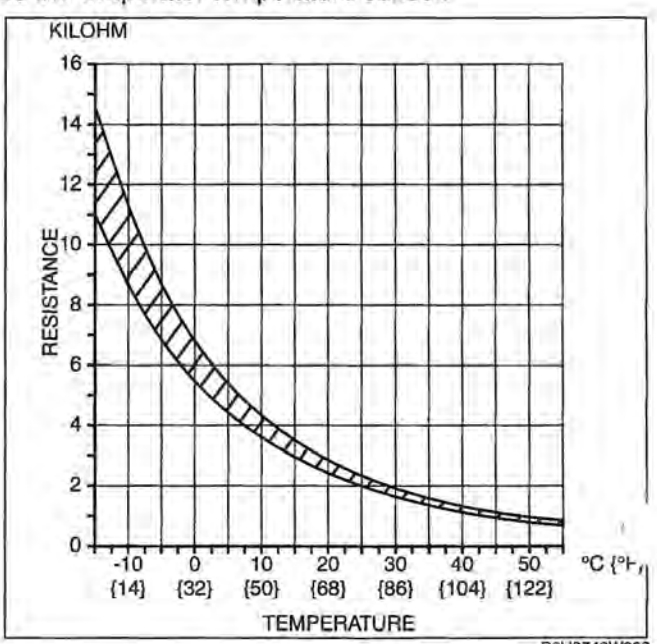

B6U0740W006

EVAPORATOR TEMPERATURE SENSOR INSPECTION [L3 WITH TC]

E6U074061022W03

1. Turn the AUTO switch on.
2. Set the temperature control at MAX COLD (Turn the left).
   Turn the A/C switch.
3. Set the RECIRCULATE mode.
5. Close all doors and windows.
6. Wait for **5 min**.
7. Remove the glove compartment. (See 09–17–9 GLOVE COMPARTMENT REMOVAL/INSTALLATION.)
8. Disconnect the evaporator temperature sensor.
9. Measure the temperature at the blower inlet.
10. Measure the resistance between terminals of the evaporator temperature sensor.
    - If the resistance is not as shown in the graph, replace the evaporator temperature sensor.

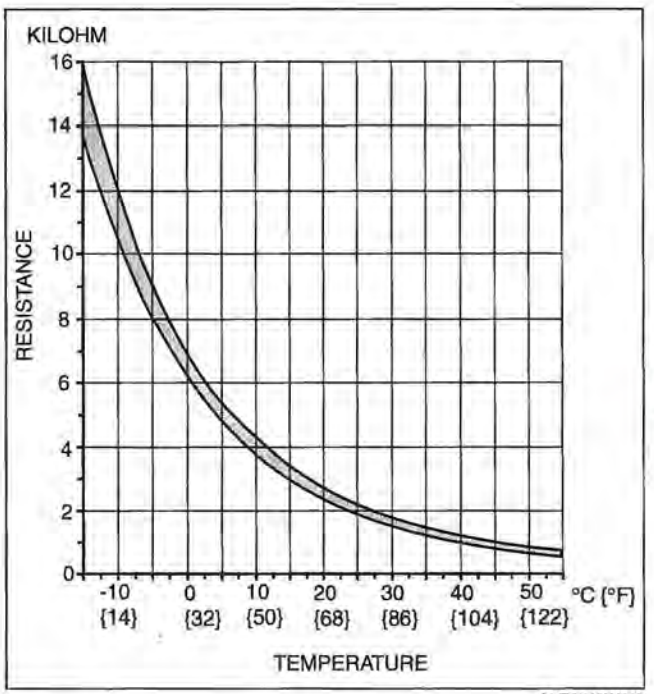

A6E8540W019

WATER TEMPERATURE SENSOR REMOVAL/INSTALLATION [L3, AJ]

E6U074061752W01

1. Remove the water temperature sensor from the A/C unit. (See 07–11–8 A/C UNIT DISASSEMBLY/ASSEMBLY [L3, AJ].)

A/C WATER TEMPERATURE SENSOR REMOVAL/INSTALLATION [L3 WITH TC]

E6U074061752W03

1. Disconnect the negative battery cable.
2. Remove the following parts:
   (1) Glove compartment (See 09–17–9 GLOVE COMPARTMENT REMOVAL/INSTALLATION.)
   (2) Console (See 09–17–8 CONSOLE REMOVAL/INSTALLATION.)
   (3) Meter hood (See 09–17–6 METER HOOD REMOVAL/INSTALLATION.)
   (4) Instrument cluster (See 09–22–3 INSTRUMENT CLUSTER REMOVAL/INSTALLATION.)
   (5) Column cover (See 09–17–6 COLUMN COVER REMOVAL/INSTALLATION.)
   (6) Lower panel (See 09–17–7 LOWER PANEL REMOVAL/INSTALLATION.)
   (7) Steering shaft (See 06–12–7 STEERING WHEEL AND COLUMN REMOVAL/INSTALLATION.)
   (8) A-pillar trim (See 09–17–10 A-PILLAR TRIM REMOVAL/INSTALLATION.)
   (9) Front scuff plate (See 09–17–11 FRONT SCUFF PLATE REMOVAL/INSTALLATION.)
   (10)Front side trim (See 09–17–11 FRONT SIDE TRIM REMOVAL/INSTALLATION.)
   (11)Side panel (See 09–17–6 SIDE PANEL REMOVAL/INSTALLATION.)
3. Remove the dashboard. (See 09–17–4 DASHBOARD REMOVAL/INSTALLATION.)

4. Remove in the order indicated in the table.

1	Air hose
2	Duct (3)
3	Plate spring
4	A/C water temperature sensor

5. Install in the reverse order of removal.

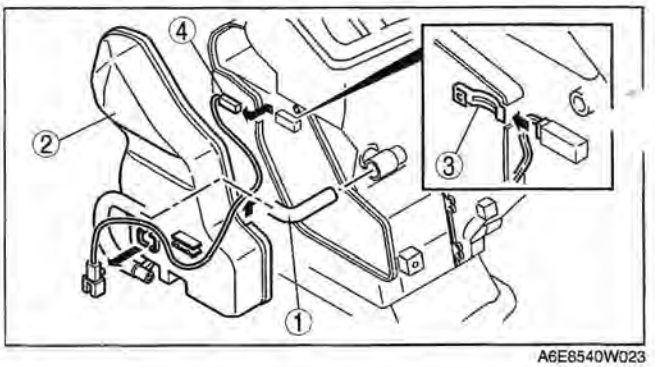

A6E6540W023

WATER TEMPERATURE SENSOR INSPECTION [L3, AJ]

E6U074061752W02

1. Measure the temperature around the water temperature sensor.
2. Measure the resistance between terminals of the water temperature sensor.
   - If the resistance is not as shown in the graph, replace the water temperature sensor.

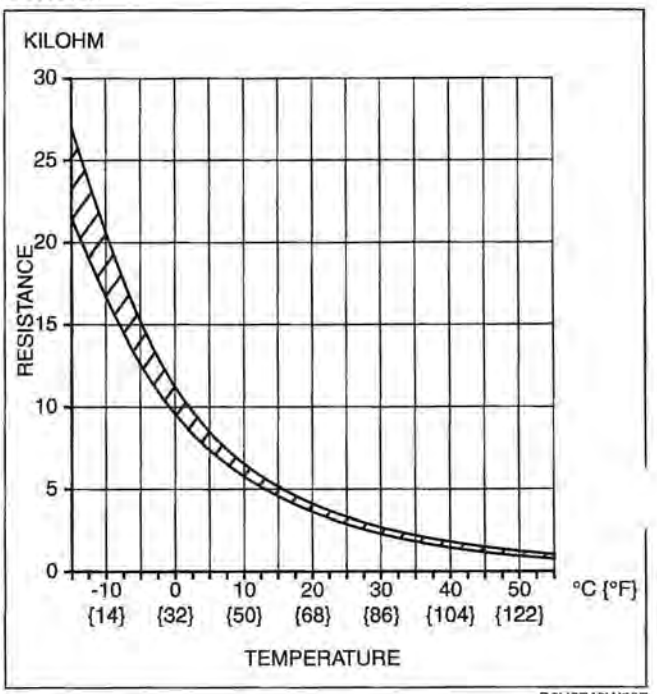

B6U0740W007

A/C WATER TEMPERATURE SENSOR INSPECTION [L3 WITH TC]

E6U074061752W04

1. Measure the temperature around the A/C water temperature sensor.
2. Measure the resistance between terminals of the A/C water temperature sensor.
   - If the resistance is not as shown in the graph, replace the A/C water temperature sensor.

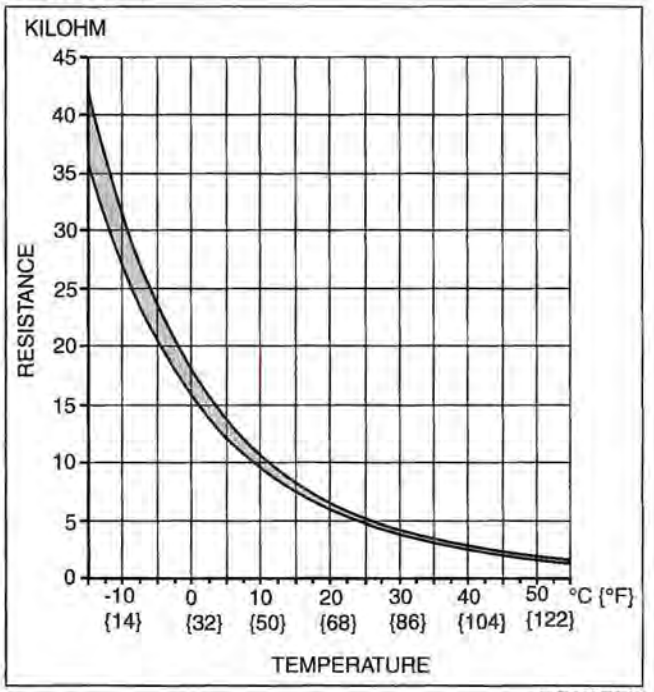

A6E8540W024

07–40

REFRIGERANT PRESSURE SWITCH REMOVAL/INSTALLATION [L3, AJ]

E6U074061503W01

1. Remove the battery.
2. Discharge the refrigerant from the system. (See 07–10–5 REFRIGERANT CHARGING [L3, AJ].)
3. Remove the front combination light (RH). (See 09–18–8 FRONT COMBINATION LIGHT REMOVAL/ INSTALLATION.)
4. Loosen the refrigerant pressure switch using two spanners.
5. Remove in the order indicated in the table.

1	Refrigerant pressure switch connector
2	Refrigerant pressure switch (See 07–40–27 Refrigerant Pressure Switch Installation Note.)

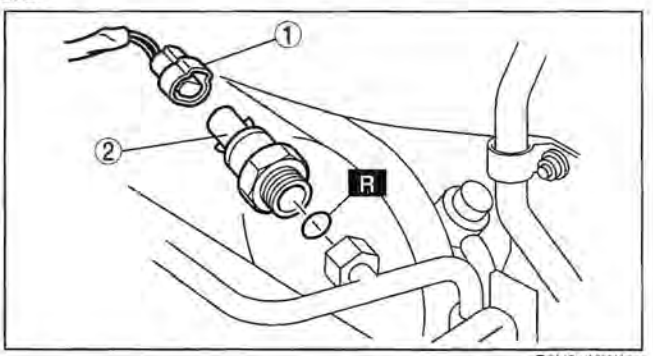

B6U0740W037

6. Install in the reverse order of removal.

Refrigerant Pressure Switch Installation Note

1. Apply compressor oil to O-ring and connect the joint.

REFRIGERANT PRESSURE SWITCH REMOVAL/INSTALLATION [L3 WITH TC]

E6U074061503W03

1. Remove the battery.
2. Discharge the refrigerant from the system. (See 07–10–5 REFRIGERANT RECOVERY.) (See 07–10–8 REFRIGERANT CHARGING [L3 WITH TC].)
3. Loosen the refrigerant pressure switch using two spanners.
4. Remove in the order indicated in the table.

1	Refrigerant pressure switch connector
2	Refrigerant pressure switch (See 07–40–28 Refrigerant Pressure Switch Installation Note.)

5. Install in the reverse order of removal.

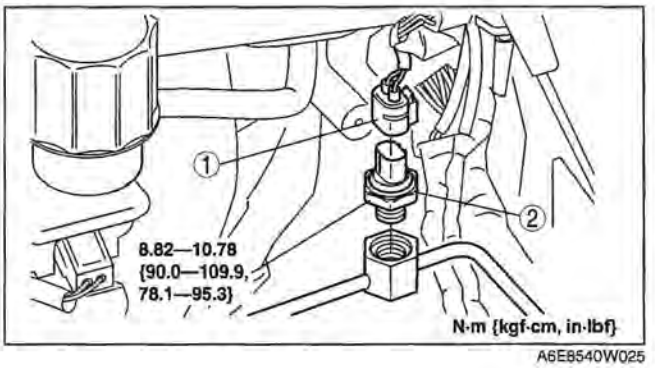

A6E8540W025

Refrigerant Pressure Switch Installation Note

1. Apply compressor oil to O-ring and connect the joint.

REFRIGERANT PRESSURE SWITCH INSPECTION [L3, AJ]

E6U074061503W02

1. Install the manifold gauge set.
2. Disconnect the refrigerant pressure switch connector.
3. Verify the high-pressure side reading of the manifold gauge and continuity between the terminals of the refrigerant pressure switch.
   - If not as specified, replace the refrigerant pressure switch.

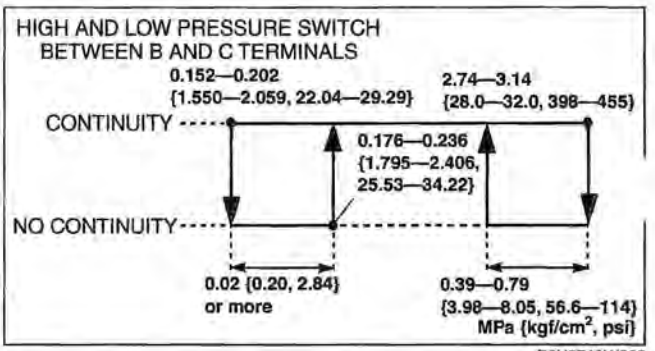

B6U0740W008

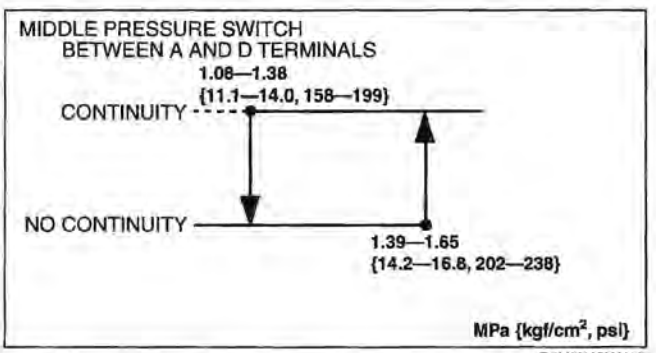

C6U0740W107

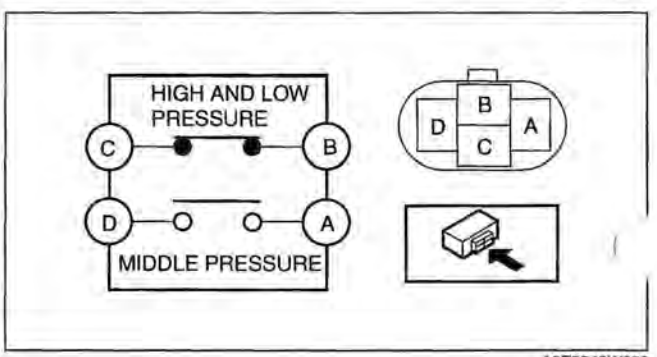

A6E8540W026

REFRIGERANT PRESSURE SWITCH INSPECTION [L3 WITH TC]

E6U074061503W04

1. Install the manifold gauge.
2. Disconnect the refrigerant pressure switch connector. Verify the high-pressure side reading of the manifold gauge and continuity between the terminals of the refrigerant pressure switch.
   - If the continuity is not normal, replace the refrigerant pressure switch.

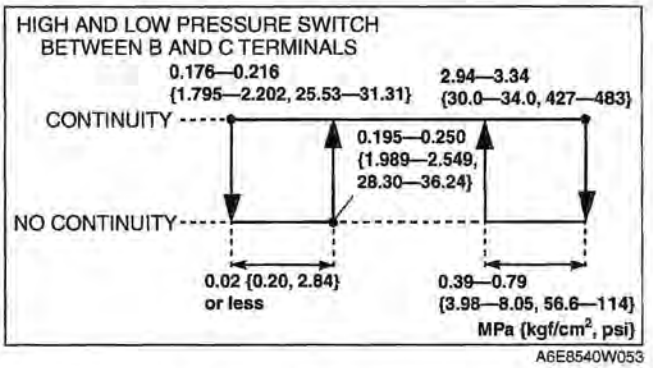

A6E8540W053

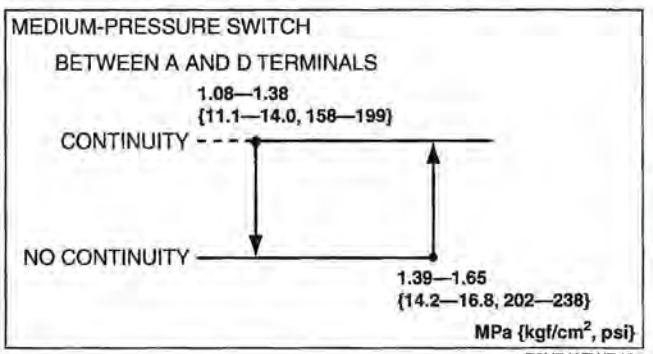

E6U740ZWB105

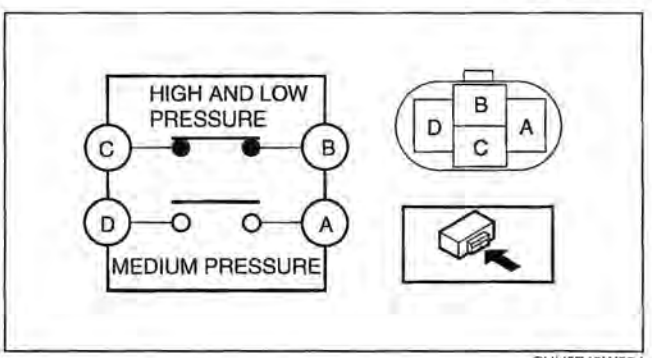

CHU0740W024

CLIMATE CONTROL UNIT REMOVAL [L3, AJ]

E6U074061190W01

1. Disconnect the negative battery cable.
2. Disconnect the air mix wire from wire clamp and link. (Manual air conditioner)
3. Remove the center panel unit. (See 09–20–4 CENTER PANEL UNIT REMOVAL/INSTALLATION.)
4. Remove the screws and climate control unit. (Full-auto air conditioner)
5. Release the hook and pull the climate control unit toward you. (Manual air conditioner)
6. Disconnect the climate control unit connectors and remove the climate control unit. (Manual air conditioner)

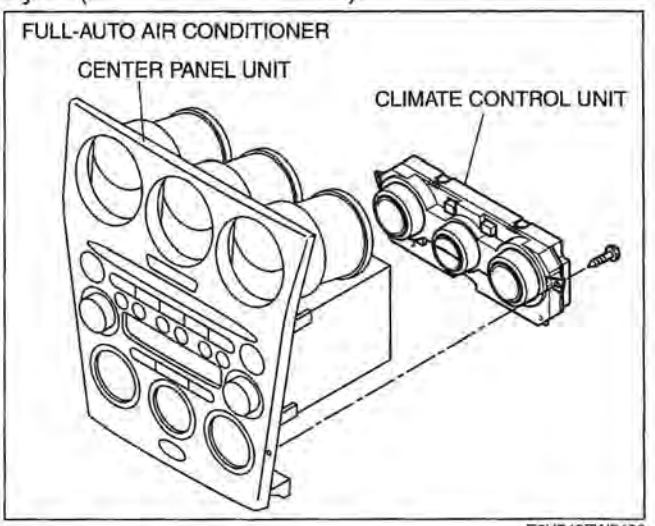

E6U740ZW5400

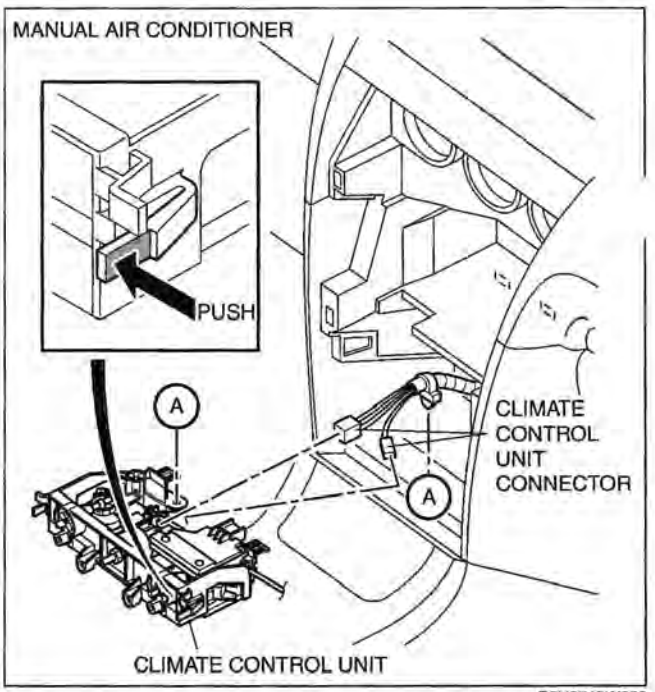

B6U0740W030

CLIMATE CONTROL UNIT INSTALLATION [L3, AJ]

1. Pass air mix wire through the following routes then connect to A/C unit. (Manual air conditioner)
2. Connect the climate control unit connectors. (Manual air conditioner)
3. Install the climate control unit to the center panel. (Full-auto air conditioner)
4. Install the center panel.
5. Adjust the climate control unit wire. (Manual air conditioner) (See 07–40–32 CLIMATE CONTROL UNIT WIRE ADJUSTMENT.)
6. Connect the negative battery cable.

E6U074061190W02

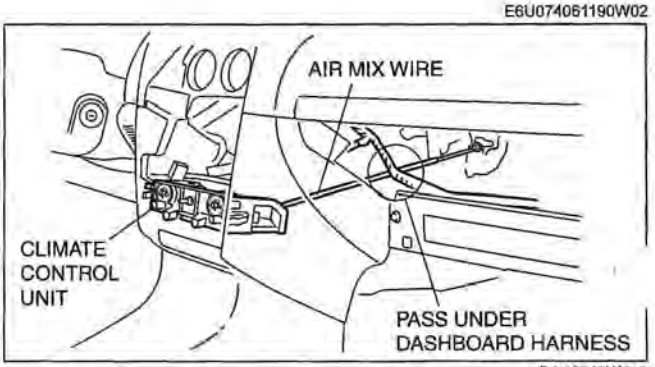

B6U0740W010

CLIMATE CONTROL UNIT REMOVAL/INSTALLATION [L3 WITH TC]

E6U074061190W06

1. Disconnect the negative battery cable.
2. Remove the center panel. (See 09–20–4 CENTER PANEL UNIT REMOVAL/INSTALLATION.)
   Remove the screws and climate control unit.
   .. Install in the reverse order of removal.

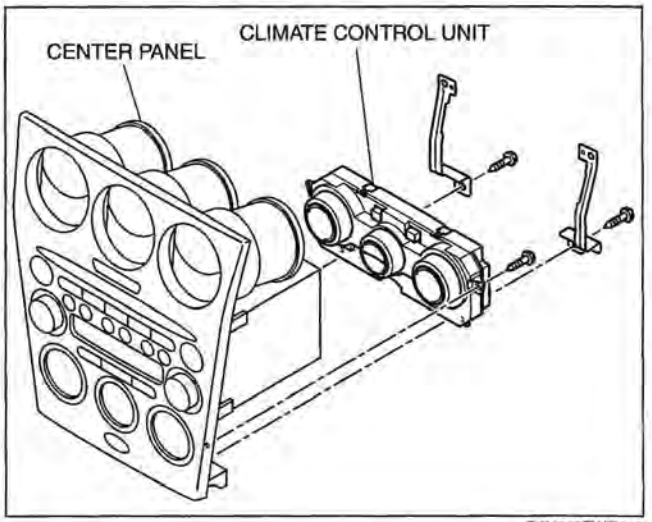

E6U740ZWB010

CLIMATE CONTROL UNIT DISASSEMBLY/ASSEMBLY [L3, AJ]

E6U074061190W03

1. Disassemble in the order indicated in the table.

1	Illumination bulb
2	Body

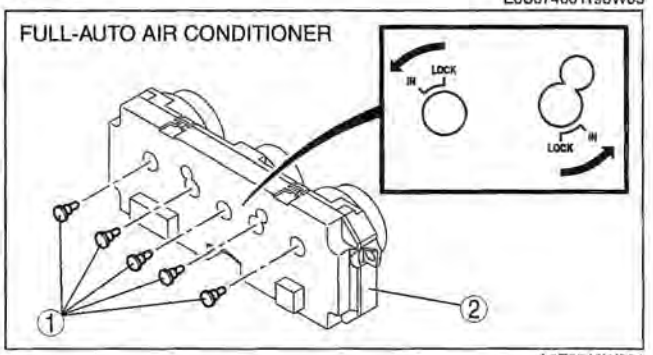

A6E8540W061

1	Fan switch
2	Air mix wire (See 07–40–32 Wire Disassembly Note.) (See 07–40–32 Wire Assembly Note)
3	Mode switch
4	Body

2. Assemble in the reverse order of disassembly.

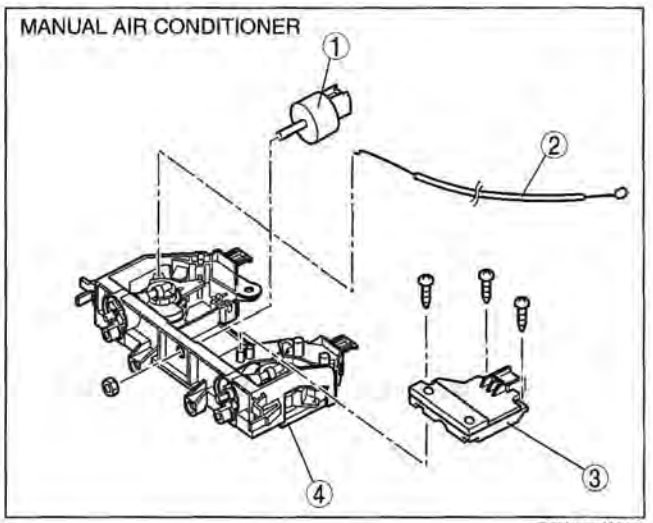

B6U0740W040

Wire Disassembly Note

1. Disassemble the wire in the shown in the figure.

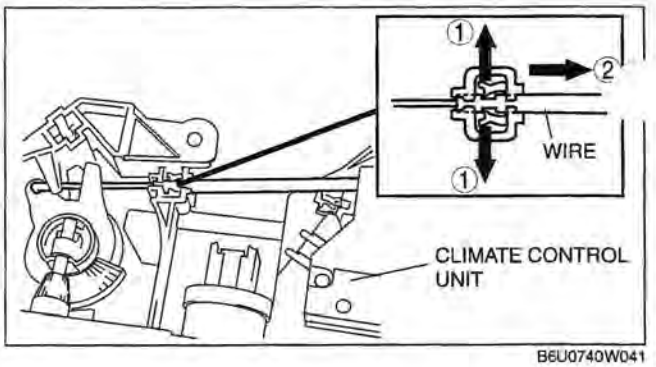

B6U0740W041

Wire Assembly Note

1. Assemble the wire to the position as shown in the figure.

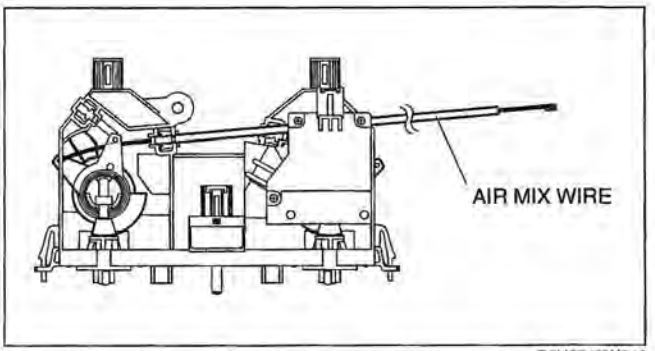

B6U0740W042

CLIMATE CONTROL UNIT DISASSEMBLY/ASSEMBLY [L3 WITH TC]

E6U074061190W07

1. Disassemble in the order indicated in the table.

1	Illumination bulb
2	Body

2. Assemble in the reverse order of disassembly.

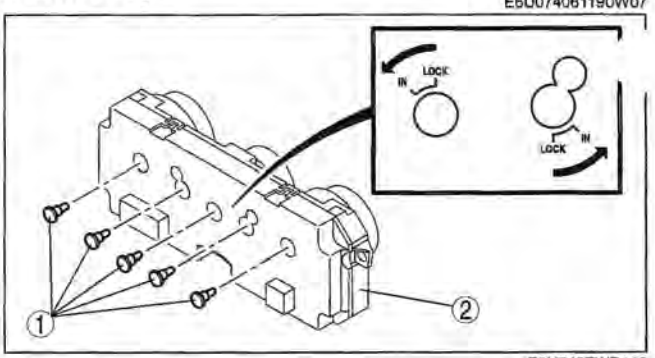

E6U740ZWB110

CLIMATE CONTROL UNIT WIRE ADJUSTMENT

E6U074061190W04

Air Mix Wire

1. Set the temperature control dial to max hot.
2. Set the air mix link to max hot in the direction shown by the arrow and insert a screwdriver at the set hole.
3. Connect the air mix wire to the air mix link.
4. Clamp the air mix wire to the wire clamp.
5. Verify that the temperature control dial rotates at full stroke.

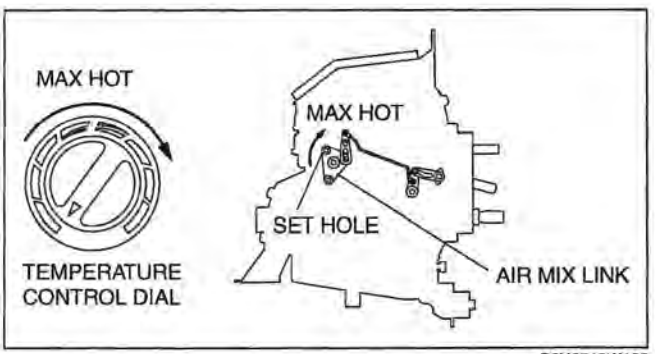

C6U0740W10

CLIMATE CONTROL UNIT INSPECTION [L3, AJ]

E6U074061190W05

Full-auto Air Conditioner

1. Connect all center panel connectors.
   Turn the ignition switch to ON position.
2. Measure the voltage at each climate control unit terminal and refer to the terminal voltage list.
   - If not as specified, inspect the parts listed under "Action" and the related wiring harness.
     — If there is any malfunction, replace the climate control unit.

Terminal Voltage List (Reference)

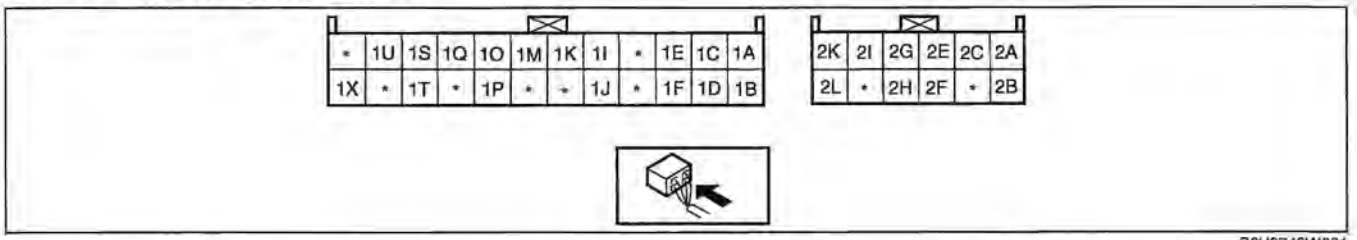

B6U0740W001

Terminal	Signal	Connected to	Test condition	Voltage (V)	Action
1A	Air mix 1	Air mix actuator	Moving to HOT Moving to COLD	See Figure 2	• Inspect for continuity or short circuit (Climate control unit—air mix actuator: 1A—F) • Inspect air mix actuator
1B	Air mix 2	Air mix actuator	Moving to HOT Moving to COLD	See Figure 2	• Inspect for continuity or short circuit (Climate control unit—air mix actuator: 1B—A) • Inspect air mix actuator
1C	PWM output	PWM unit	Fan speed: 1—7	See Figure 1	• Inspect for continuity or short circuit (Climate control unit—PWM unit: 1C—2A) • Inspect PWM unit
1D	Air mix 3	Air mix actuator	Moving to HOT Moving to COLD	See Figure 2	• Inspect for continuity or short circuit (Climate control unit—air mix actuator: 1D—D) • Inspect air mix actuator
1E	Rear window defroster SW signal	Rear window defroster relay	Rear window defroster switch is off	12	• Inspect for continuity or short circuit (Climate control unit—rear window defroster relay: 1E—E) • Inspect rear window defroster relay
			Rear window defroster switch is on	Below 1.0	• Inspect terminal voltage of climate control unit (2H, 2L) • Inspect center panel
1F	On-board diagnostic signal	DLC	Terminal A of DLC is shorted.	Below 1.0	• Inspect for continuity (Climate control unit—DLC: 1F—A)
			Other	5	• Inspect short circuit (Climate control unit—DLC: 1F—A) • Inspect terminal voltage of climate control unit (2H, 2L)
1G	—	—	—	—	—
1H	—	—	—	—	—

Terminal	Signal	Connected to	Test condition	Voltage (V)	Action
1I	GND	• Passenger compartment temperature sensor • Evaporator temperature sensor • Ambient temperature sensor • Water temperature sensor • Solar radiation sensor • Airflow mode actuator	Under any condition	Below 1.0	• Inspect terminal voltage of climate control unit (2L)
1J	Air mix 4	Air mix actuator	Moving to HOT Moving to COLD	See Figure 2	• Inspect for continuity or short circuit (Climate control unit—air mix actuator: 1J—C) • Inspect air mix actuator
1K	Ambient temperature sensor input	Ambient temperature sensor	Depends on temperature surrounding sensor	See Figure 4	• Inspect for continuity (Climate control unit—ambient temperature sensor: 1K—B, 1I—A) • Inspect for short circuit (Climate control unit—ambient temperature sensor: 1K—B) • Inspect ambient temperature sensor • Inspect terminal voltage of climate control unit (2H, 2t
1L	—	—	—	—	—
1M	Passenger compartment temperature sensor input	Passenger compartment temperature sensor	Depends on temperature surrounding sensor	See Figure 5	• Inspect for continuity (Climate control unit—passenger compartment temperature sensor: 1M—B, 1I—A) • Inspect for short circuit (Climate control unit—passenger compartment temperature sensor: 1M—B) • Inspect passenger compartment temperature sensor • Inspect terminal voltage of climate control unit (2H, 2L)
1N	—	—	—	—	—
1O	Water temperature sensor input	Water temperature sensor	Depends on temperature surrounding sensor	See Figure 6	• Inspect for continuity (Climate control unit—water temperature sensor: 1O—A, 1I—B) • Inspect for short circuit (Climate control unit—water temperature sensor: 1O—A) • Inspect water temperature sensor • Inspect terminal voltage of climate control unit (2H, 2L)

Terminal	Signal	Connected to	Test condition	Voltage (V)	Action
1P	A/C	Refrigerant pressure switch	Fan switch at OFF	12	• Inspect for continuity or short circuit (Climate control unit—refrigerant pressure switch: 1P—C) (Refrigerant pressure switch—PCM: B—1AC (L3), 41 (AJ)) • Inspect refrigerant pressure switch • Inspect PCM terminal voltage (1AC (L3), 41 (AJ)) (See 01–40A–9 PCM INSPECTION [L3]) (See 01–40C–6 PCM INSPECTION [AJ])
			Fan switch at 1st position, A/C switch ON	Below 1.0	• Inspect terminal voltage of climate control unit (2H, 2L)
1Q	Evaporator temperature sensor input signal	Evaporator temperature sensor	Depends on temperature surrounding sensor	See Figure 3	• Inspect for continuity (Climate control unit—evaporator temperature sensor: 1Q—A, 1I—B) • Inspect for short circuit (Climate control unit—evaporator temperature sensor: 1Q—A) • Inspect evaporator temperature sensor • Inspect terminal voltage of climate control unit (2H, 2L)
1R	—	—	—	—	—
1S	Solar radiation sensor input	Solar radiation sensor	Incandescent light (**60W**) shining on solar radiation sensor from distance of **approx. 100mm {3.9 in}**	4.5	• Inspect for continuity or short circuit (Climate control unit—solar radiation sensor: 1S—B, 2C—A) • Inspect terminal voltage of climate control unit (2C) • Inspect solar radiation sensor
			Light to solar radiation sensor block	Below 1.0	
1T	GND	Ground	Under any condition	Below 1.0	• Inspect for continuity (Climate control unit—ground: 1T—GND) • Inspect center panel
1U	Potentiometer signal	Airflow mode actuator	VENT mode	4.1	• Inspect for continuity or short circuit (Climate control unit—airflow mode actuator: 1W—C) • Inspect airflow mode actuator • Inspect terminal voltage of climate control unit (2C)
			BI-LEVEL mode	3.3	
			HEAT mode	2.3	
			HEAT/DEF mode	1.5	
			DEFROSTER mode	0.9	
1V	—	—	—	—	—
1W	—	—	—	—	—
1X	Hazard warning SW signal	Hazard warning switch	Hazard warning switch is off	12	• Inspect for continuity or short circuit (Climate control unit—flasher unit: 1X—H) • Inspect flasher unit
			Hazard warning switch is on	Below 1.0	• Inspect terminal voltage of climate control unit (1T) • Inspect center panel

Terminal	Signal	Connected to	Test condition	Voltage (V)	Action
2A	Panel light control signal	Panel light control switch	Headlight switch ON and panel light control switch at max. illumination	0.2	• Inspect for continuity (Climate control unit— panel light control switch: 2A—C' (Panel light control switch-ground: C—GND) • Inspect panel light control switch
			Headlight switch ON and panel light control switch at min. illumination	10.2	• Inspect for short circuit (Climate control unit— panel light control switch: 2A—C)
2B	TNS signal	TNS relay	Headlight switch OFF	Below 1.0	• Inspect for short circuit (Climate control unit—TNS relay: 2B—D) • Inspect TNS relay • Inspect headlight switch
			Headlight switch ON	12	• Inspect for continuity or short circuit (Climate control unit—TNS relay: 2B—D) • Inspect TNS relay • Inspect headlight switch
2C	+5 V	• Airflow mode actuator	Ignition switch at ON position	5	• Inspect for short circuit (Climate control unit—airflow mode actuator: 2C—B, B, A) • Inspect air mix actuator • Inspect airflow mode actuator • Inspect solar radiation sensor • Inspect terminal voltage of climate control unit connector (2H, 2L)
			Ignition switch at LOCK position	Below 1.0	• Replace climate control ur
2D	—	—	—	—	—
2E	Motor drive signal	Airflow mode actuator	Moving to DEFROSTER	12	• Inspect for continuity or short circuit (Climate control unit—airflow mode actuator: 2E—F, 2G—D) • Inspect airflow mode actuator
			Moving to VENT	Below 1.0	
2F	Backup power supply	ROOM 15 A fuse	Under any condition	B+	• Inspect for continuity or short circuit (Climate control unit—fuse: 2F— ROOM 15 A fuse) • Inspect ROOM 15 A fuse
2G	Motor drive signal	Airflow mode actuator	Moving to VENT	12	• Inspect for continuity or short circuit (Climate control unit—airflow mode actuator: 2G—D, 2E—F) • Inspect airflow mode actuator
			Moving to DEFROSTER	Below 1.0	
2H	IG2	A/C 15 A fuse	Ignition switch at ON position	B+	• Inspect for continuity or short circuit (Climate control unit—fuse: 2H—A/C 15 A fuse) • Inspect A/C 15 A fuse
			Ignition switch at LOCK position	Below 1.0	• Inspect for short circuit (Climate control unit—fuse: 2H—A/C 15 A fuse)
2I	Motor drive signal	Air intake actuator	Moving to RECIRCULATE	12	• Inspect for continuity or short circuit (Climate contr unit—air intake actuator: 2I—F, 2K—D) • Inspect air intake actuator
			Moving to FRESH	Below 1.0	
2J	—	—	—	—	—

Terminal	Signal	Connected to	Test condition	Voltage (V)	Action
2K	Motor drive signal	Air intake actuator	Moving to FRESH	12	• Inspect for continuity or short circuit (Climate control unit—air intake actuator: 2K—D, 2I—F) • Inspect air intake actuator
			Moving to RECIRCULATE	Below 1.0	
2L	GND	Ground	Under any condition	Below 1.0	• Inspect for continuity (Climate control unit—ground: 2L—GND)

Figure 1

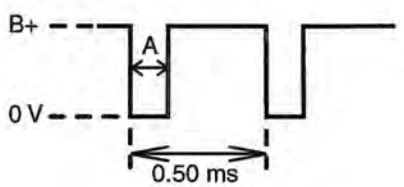

FAN SPEED	A (ms)
1	0.13
2	0.19
3	0.24
4	0.29
5	0.34
6	0.38
7	0.50

Figure 2

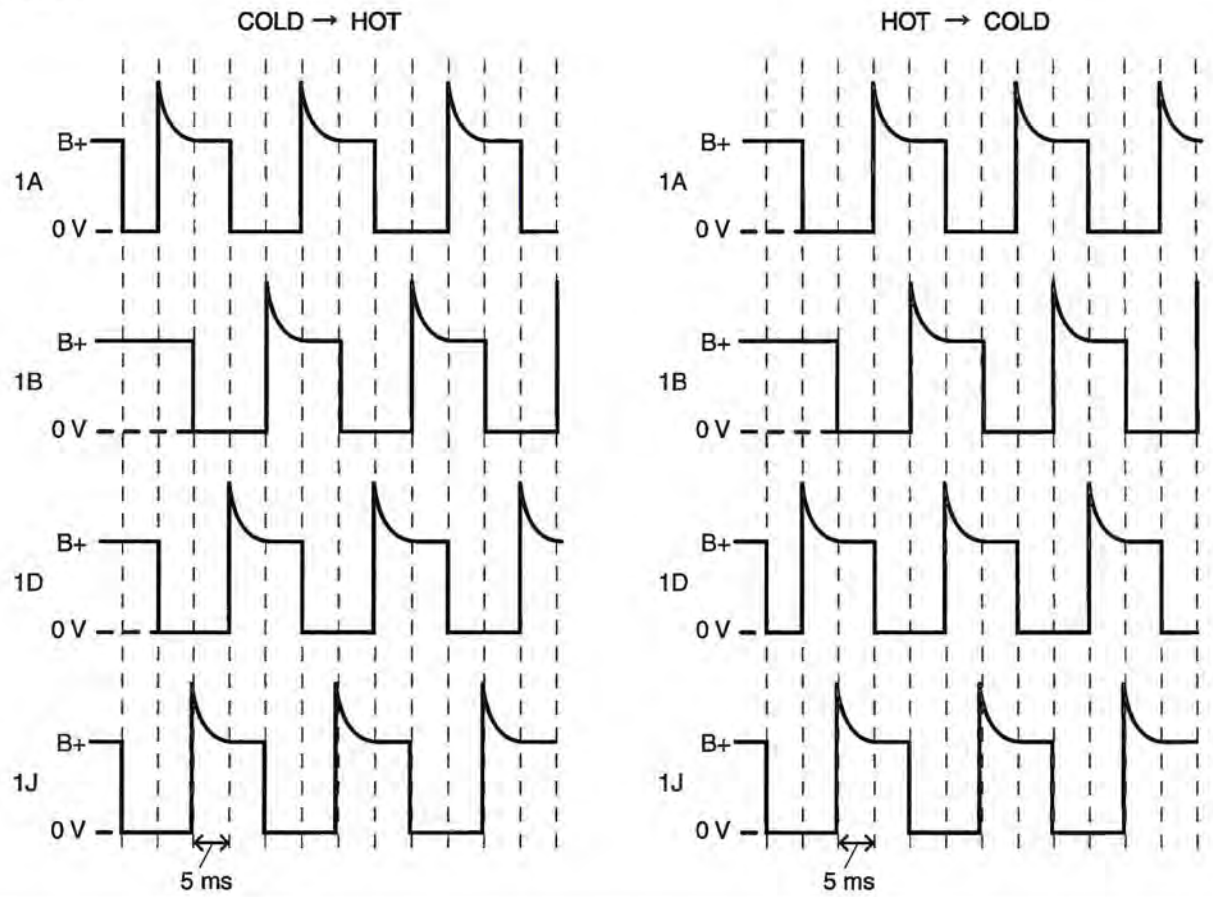

Figure 3 (Evaporator temperature sensor)

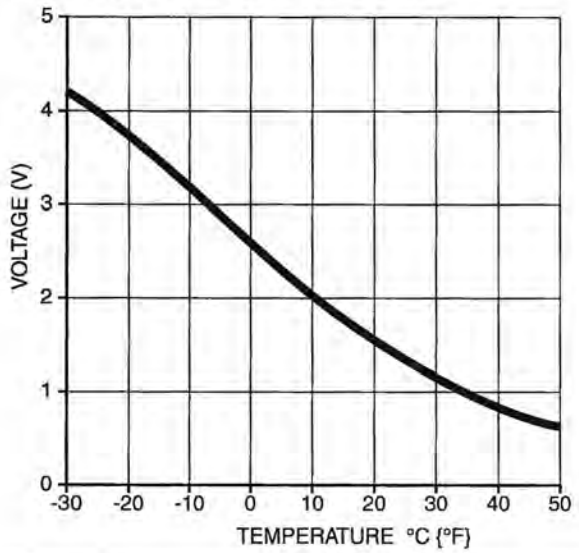

Figure 4 (Ambient temperature sensor)

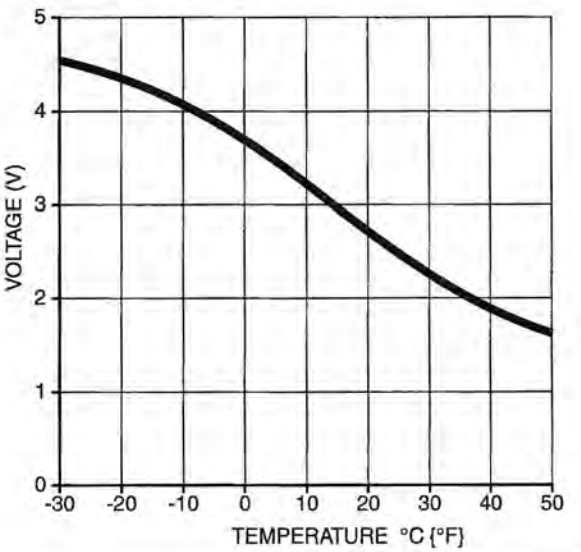

Figure 5 (Cabin temperature sensor)

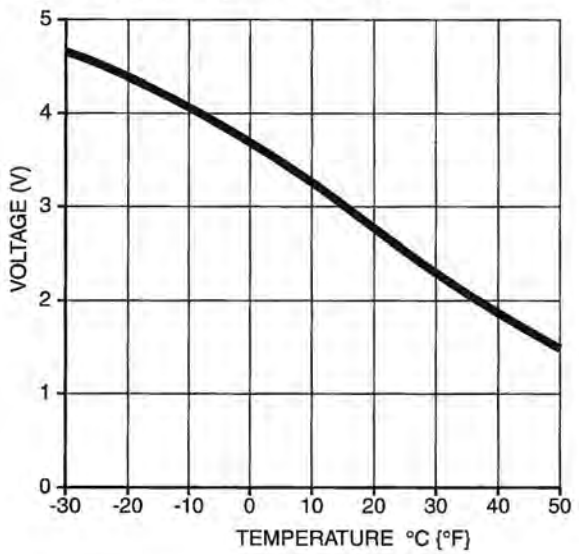

Figure 6 (Water temperature sensor)

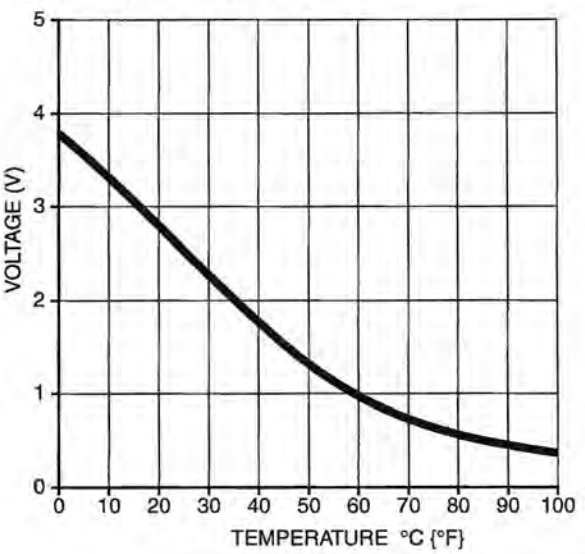

Manual Air Conditioner
Fan switch

1. Remove the climate control unit.
2. Inspect for continuity between the fan switch terminals using an ohmmeter.
   - If not as specified, replace the fan switch.

○—○ : Continuity

Switch position	Terminal				
	D	A	B	C	E
0					
1	○	○			
2	○			○	
3	○				○
4	○		○		

B6U0740W015

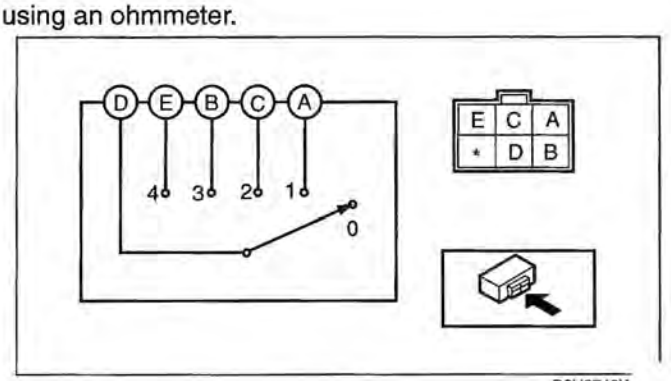

B6U0740V

Mode switch

1. Remove the climate control unit.
2. Inspect for continuity between the mode switch terminals using an ohmmeter.
   - If not as specified, replace the climate control unit.

○—○: Continuity

Switch position	Terminal	
	C	D
VENT, BI-LEVEL, HEAT		
HEAT/DEF, DEFROSTER	○	○

B6U0740W017

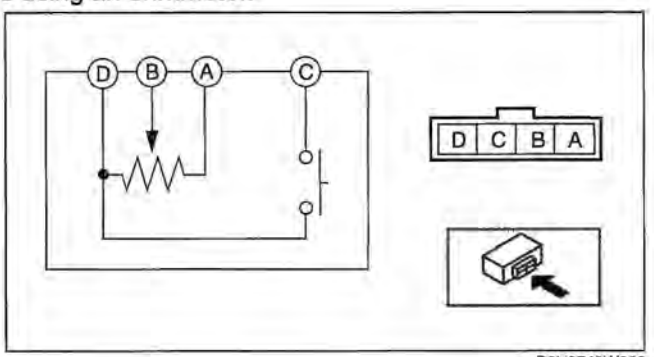

B6U0740W033

3. Verify that the resistance between the terminals of the mode switch is as shown in the table.
   - If not as specified, replace the mode switch.

Terminals	Resistance (ohm)				
	VENT	BI-LEVEL	HEAT	HEAT/DEF	DEFROSTER
A—B	0	2.48	4.96	7.44	9.92
B—D	9.92	7.44	4.96	2.48	0

07–40

CLIMATE CONTROL UNIT INSPECTION [L3 WITH TC]

E6U074061190W08

1. Connect the all center panel connectors.
2. Turn the ignition switch to ON position.
3. Measure the voltage at each climate control unit terminal and refer to the terminal voltage table.
   - If there is any malfunction, inspect the parts listed under "Inspection item(s)" and the related wiring harness.
     — If the parts under "Inspection item(s)" are found to be normal, replace the climate control unit.

'minal Voltage Table (Reference)

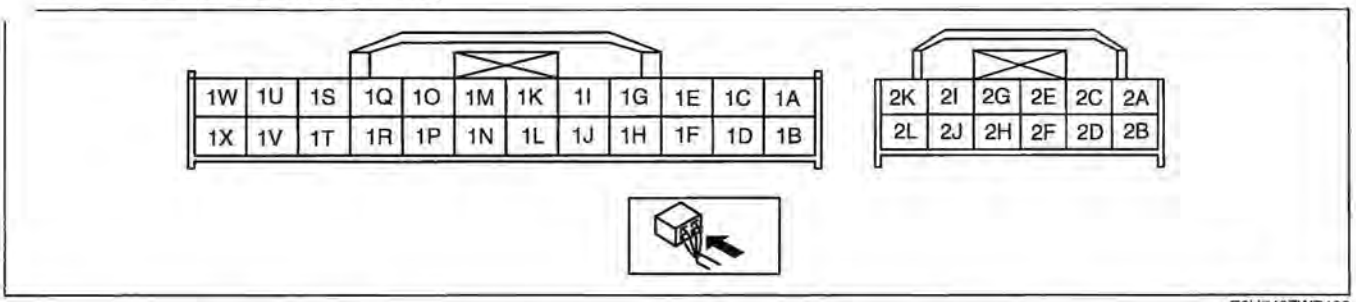

E6U740ZWB109

Terminal	Signal	Connected to	Test condition	Voltage (V)	Inspection item(s)
1A	Blower motor feedback signal	• Blower motor • Power MOS FET	Fan switch is OFF	12	1. Inspect for continuity or short circuit (Climate control unit—blower motor: 1A—A) (Climate control unit—power MOS FET: 1A—A, 1C—E) (Blower motor—blower relay: B—C) (Blower relay—fuse: D—BLOWER 40 A fuse) 2. Inspect for continuity (Power MOS FET—ground: A—GND) (Blower relay—ground: A—GND) 3. Inspect power MOS FET 4. Inspect blower motor 5. Inspect blower relay 6. Inspect BLOWER 40 A fuse 7. Replace power MOS FET
			Fan switch is at manual LO	7.8	
			Fan switch is at manual HI	0.2	

Terminal	Signal	Connected to	Test condition	Voltage (V)	Inspection item(s)
1B	+5 V	• Air mix actuator • Airflow mode actuator • Solar radiation sensor	Ignition switch at ON position	5.0	• Inspect for short circuit (Climate control unit— air mix actuator, airflow mode actuator, solar radiation sensor: 1B—A, B, A) • Inspect air mix actuator • Inspect airflow mode actuator • Inspect solar radiation sensor • Inspect terminal voltage of climate control unit connector (2H, 2L)
			Ignition switch at LOCK position	Below 1.0	• Replace climate control unit
1C	Blower motor control signal	Power MOS FET	Fan switch is OFF	Below 1.0	• Inspect terminal voltage of climate control unit (1A)
			Fan switch is at manual LO	4.1	
			Fan switch is at manual HI	7.9	
1D	—	—	—	—	—
1E	Rear window defroster SW signal	Rear window defroster relay	Rear window defroster switch is off	12	• Inspect for continuity or short circuit (Climate control unit—rear window defroster relay: 1E—E) • Inspect rear window defroster relay
			Rear window defroster switch is on	Below 1.0	• Inspect terminal voltage of climate control unit (2H, 2L) • Inspect center panel
1F	On-board diagnostic signal	A/C check connector	Terminal A of A/C check connector is shorted.	Below 1.0	• Inspect for continuity (Climate control unit—A/C check connector: 1F—A)
			Other	5.4	• Inspect short circuit (Climate control unit—A/C check connector: 1F—A) • Inspect terminal voltage of climate control unit (2H, 2L)
1G	—	—	—	—	—
1H	—	—	—	—	—
1I	GND	• Passenger compartment temperature sensor • Evaporator temperature sensor • Ambient temperature sensor • A/C water temperature sensor • Air mix actuator • Airflow mode actuator	Under any condition	Below 1.0	• Inspect terminal voltage of climate control unit (2L)
1J	—	—	—	—	—

Terminal	Signal	Connected to	Test condition	Voltage (V)	Inspection item(s)
1K	Ambient temperature sensor input	Ambient temperature sensor	Depends on temperature surrounding sensor	See Figure 2	• Inspect for continuity (Climate control unit—ambient temperature sensor: 1K—B, 1I—A) • Inspect for short circuit (Climate control unit—ambient temperature sensor: 1K—B) • Inspect ambient temperature sensor • Inspect terminal voltage of climate control unit (2H, 2L)
1L	—	—	—	—	—
1M	Passenger compartment temperature sensor input	Passenger compartment temperature sensor	Depends on temperature surrounding sensor	See Figure 3	• Inspect for continuity (Climate control unit—passenger compartment temperature sensor: 1M—B, 1I—A) • Inspect for short circuit (Climate control unit—passenger compartment temperature sensor: 1M—B) • Inspect passenger compartment temperature sensor • Inspect terminal voltage of climate control unit (2H, 2L)
1N	—	—	—	—	—
1O	A/C water temperature sensor input	A/C water temperature sensor	Depends on temperature surrounding sensor	See Figure 4	• Inspect for continuity (Climate control unit—A/C water temperature sensor: 1O—A, 1I—B) • Inspect for short circuit (Climate control unit—A/C water temperature sensor: 1O—A) • Inspect A/C water temperature sensor • Inspect terminal voltage of climate control unit (2H, 2L)
1P	A/C	Refrigerant pressure switch	Fan switch at OFF	12	• Inspect for continuity or short circuit (Climate control unit—refrigerant pressure switch: 1P—C (Refrigerant pressure switch—PCM: B—1AC) • Inspect refrigerant pressure switch • Inspect PCM terminal voltage (1AC) (See 01–40B–6 PCM INSPECTION [L3 WITH TC])
			Fan switch at 1st position, A/C switch ON	Below 1.0	• Inspect terminal voltage of climate control unit (2H, 2L)
1Q	Evaporator temperature sensor input signal	Evaporator temperature sensor	Depends on temperature surrounding sensor	See Figure 1	• Inspect for continuity (Climate control unit—evaporator temperature sensor: 1Q—B, 1I—A) • Inspect for short circuit (Climate control unit—evaporator temperature sensor: 1Q—B) • Inspect evaporator temperature sensor • Inspect terminal voltage of climate control unit (2H, 2L)

Terminal	Signal	Connected to	Test condition	Voltage (V)	Inspection item(s)
1R	—	—	—	—	—
1S	Solar radiation sensor input	Solar radiation sensor	Incandescent light (**60W**) shining on solar radiation sensor from distance of **approx. 100mm {3.9 in}**	4.0	• Inspect for continuity or short circuit (Climate contr unit—solar radiation senso 1S—B, 1B—A) • Inspect terminal voltage of climate control unit (1B) • Inspect solar radiation sensor
			Light to solar radiation sensor block	Below 1.0	
1T	GND	Ground	Under any condition	Below 1.0	• Inspect for continuity (Climate control unit—ground: 1T—GND) • Inspect center panel
1U	Potentiometer signal	Air mix actuator	Set temperature at MAX COLD	0.6	• Inspect for continuity or short circuit (Climate control unit—air mix actuator: 1U—C) • Inspect air mix actuator • Inspect terminal voltage of climate control unit (1B)
			Set temperature at MAX HOT	4.3	
1V	—	—	—	—	—
1W	Potentiometer signal	Airflow mode actuator	VENT mode	4.3	• Inspect for continuity or short circuit (Climate control unit—airflow mode actuator: 1W—C) • Inspect airflow mode actuator • Inspect terminal voltage of climate control unit (1B)
			BI-LEVEL mode	3.3	
			HEAT mode	2.3	
			HEAT/DEF mode	1.5	
			DEFROSTER mode	0.6	
1X	Hazard warning SW signal	Hazard warning switch	Hazard warning switch is off	12	• Inspect for continuity or short circuit (Climate control unit—flasher unit: 1X—H) • Inspect flasher unit
			Hazard warning switch is on	Below 1.0	• Inspect terminal voltage of climate control unit (1T) • Inspect center panel
2A	Panel light control signal	Panel light control switch	Headlight switch ON and panel light control switch at max. illumination	0.2	• Inspect for continuity (Climate control unit— panel light control switch: 2A—C) (Panel light control switch—ground: C—GND) • Inspect panel light control switch
			Headlight switch ON and panel light control switch at min. illumination	10.2	• Inspect for short circuit (Climate control unit— panel light control switch: 2A—C)
2B	TNS signal	TNS relay	Headlight switch OFF	Below 1.0	• Inspect for short circuit (Climate control unit—TNS relay: 2B—D) • Inspect TNS relay • Inspect headlight switch
			Headlight switch ON	12	• Inspect for continuity or short circuit (Climate control unit—TNS relay: 2B—D) • Inspect TNS relay • Inspect headlight switch
2C	Motor drive signal	Air mix actuator	Moving to COLD	12	• Inspect for continuity or short circuit (Climate control unit—air mix actuator: 2C—D, 2D—F) • Inspect air mix actuator
			Moving to HOT	Below 1.0	
2D	Motor drive signal	Air mix actuator	Moving to HOT	12	• Inspect for continuity or short circuit (Climate control unit—air mix actuator: 2C—D, 2D—F) • Inspect air mix actuator
			Moving to COLD	Below 1.0	

Terminal	Signal	Connected to	Test condition	Voltage (V)	Inspection item(s)
2E	Motor drive signal	Airflow mode actuator	Moving to DEFROSTER	12	• Inspect for continuity or short circuit (Climate control unit—airflow mode actuator: 2E—F, 2G—D) • Inspect airflow mode actuator
			Moving to VENT	Below 1.0	
2F	Backup power supply	ROOM 15 A fuse	Under any condition	B+	• Inspect for continuity or short circuit (Climate control unit—fuse: 2F— ROOM 15 A fuse) • Inspect ROOM 15 A fuse
2G	Motor drive signal	Airflow mode actuator	Moving to VENT	12	• Inspect for continuity or short circuit (Climate control unit—airflow mode actuator: 2G—D, 2E—F) • Inspect airflow mode actuator
			Moving to DEFROSTER	Below 1.0	
2H	IG2	A/C 15 A fuse	Ignition switch at ON position	B+	• Inspect for continuity or short circuit (Climate control unit—fuse: 2H—A/C 15 A fuse) • Inspect A/C 15 A fuse
			Ignition switch at LOCK position	Below 1.0	• Inspect for short circuit (Climate control unit—fuse: 2H—A/C 15 A fuse)
2I	Motor drive signal	Air intake actuator	Moving to RECIRCULATE	12	• Inspect for continuity or short circuit (Climate control unit—air intake actuator: 2I—F, 2K—D) • Inspect air intake actuator
			Moving to FRESH	Below 1.0	
2J	—	—	—	—	—
2K	Motor drive signal	Air intake actuator	Moving to FRESH	12	• Inspect for continuity or short circuit (Climate control unit—air intake actuator: 2K—D, 2I—F) • Inspect air intake actuator
			Moving to RECIRCULATE	Below 1.0	
2L	GND	Ground	Under any condition	Below 1.0	• Inspect for continuity (Climate control unit—ground: 2L—GND)

Figure 1 (Evaporator temperature sensor)

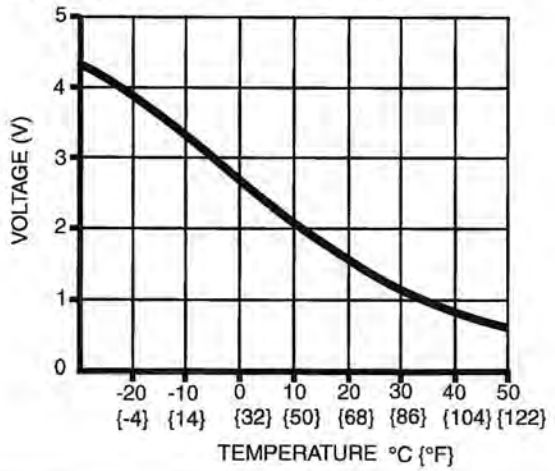

Figure 2 (Ambient temperature sensor)

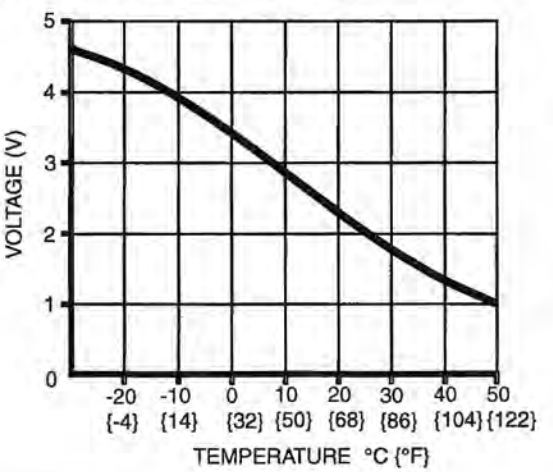

Figure 3 (Passenger compartment temperature sensor)

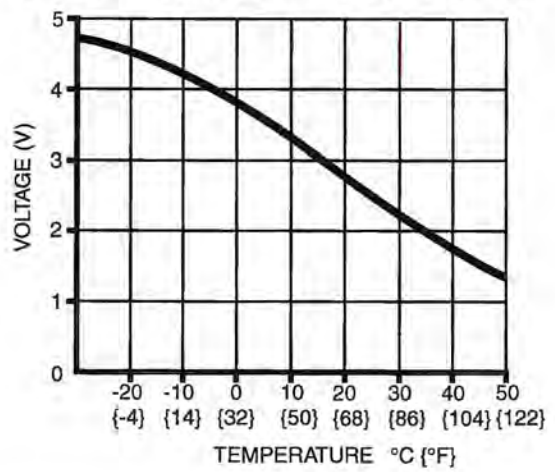

Figure 4 (A/C water temperature sensor)

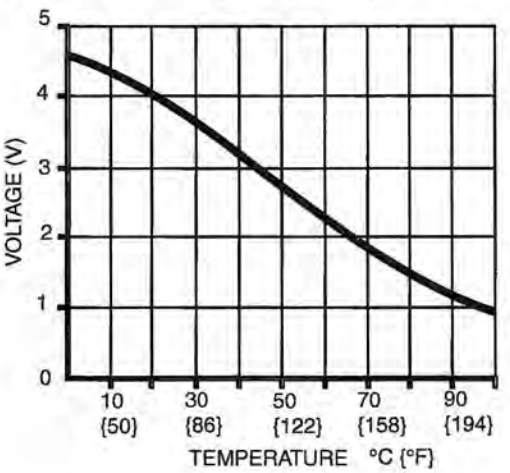

07–50 TECHNICAL DATA

HVAC TECHNICAL DATA [L3, AJ] 07–50–1
HVAC TECHNICAL DATA [L3 WITH TC] 07–50–1

HVAC TECHNICAL DATA [L3, AJ]

E6U075000000W01

Item				Specification
REFRIGERANT SYSTEM				
Refrigerant	Type			R-134a
	Regular amount (approximate quantity)		(g {oz})	475 {16.8}
BASIC SYSTEM				
A/C compressor	Lubrication oil (approximate quantity)	Type		ZXL 100PG
		Sealed volume	(ml {cc, fl oz})	150 {150, 5.07}
CONTROL SYSTEM				
A/C compressor	Magnetic clutch clearance		(mm {in})	0.3—0.6 {0.012—0.023}

HVAC TECHNICAL DATA [L3 WITH TC]

E6U075000000W02

Item				Specification
REFRIGERANT SYSTEM				
Refrigerant	Type			R-134a
	Regular amount (approx. quantity)		(g {oz})	470 {16.6}
BASIC SYSTEM				
C compressor	Lubrication oil	Type		ATMOS GU10
		Sealed volume (approx. quantity)	(ml {cc, fl oz})	150 {150, 5.07}
CONTROL SYSTEM				
A/C compressor	Magnetic clutch clearance		(mm {in})	0.30—0.50 {0.012—0.019}

RESTRAINTS

08
SECTION

ON-BOARD DIAGNOSTIC 08-02
SYMPTOM
TROUBLESHOOTING 08-03
AIR BAG SYSTEM 08-10
SEAT BELT. 08-11
SERVICE TOOLS 08-60

08–02 ON-BOARD DIAGNOSTIC

FOREWORD 08–02–2
Outline 08–02–2
Flowchart 08–02–3
DTCs Reading Procedure 08–02–4
Clearing DTCs Procedure 08–02–4
PID/Data Monitor and Record Procedure 08–02–4
AIR BAG SYSTEM WIRING DIAGRAM . . 08–02–5
DTC TABLE 08–02–6
PID/DATA MONITOR TABLE 08–02–10
DTC B1013 08–02–14
DTC B1017 08–02–15
DTC B1231 08–02–15
DTC B1317, B1318 08–02–16
DTC B1342 08–02–18
DTC B1869, B1870 08–02–18
DTC B1877, B1878, B1879, B1885 08–02–20
DTC B1881, B1882, B1883, B1886 08–02–22
DTC B1884, B1890 08–02–24
DTC B1913, B1916, B1932, B1934 08–02–26
DTC B1913, B1925, B1933, B1935 08–02–28
DTC B1992, B1993, B1994, B1995 08–02–30
DTC B1996, B1997, B1998, B1999 08–02–32
DTC B2228, B2230, B2232, B2234 08–02–34
DTC B2229, B2231, B2233, B2235 08–02–36
DTC B2290 08–02–38
DTC B2296 08–02–40
DTC B2444, U2017 08–02–42
DTC B2445, U2018 08–02–44
DTC B2477 08–02–46
DTC B2773, B2774, B2775, B2776 08–02–46
DTC B2777, B2778, B2779, B2780 08–02–48
DTC B2867 08–02–50
DTC C1947, C1948, C1981 08–02–52

FOREWORD

E6U080200000W01

Outline

- The OBD (on-board diagnostic) test inspects the integrity and function of the air bag system and outputs the results when requested by the specific tests.
- The OBD test also:
  - — Provides a quick inspection of the air bag system.
  - — Is usually performed at the start of each diagnostic procedure.
  - — Provides verification after repairs to ensure that no other faults occurred during service.
- The OBD test is divided into three tests:
  - — Read/clear diagnostic results
  - — PID/data monitor and record
- The diagnostic DTC can be read/cleared, using the **SST** (WDS or equivalent).

Note

- When the air bag system is malfunctioning, turn the ignition switch to the ON position to display the current DTC, using the air bag system warning light on the instrument cluster. However this light is strictly for reference. Make sure to inspect the system, using the **SST** (WDS or equivalent).

Read/clear diagnostic results

- This function allows you to read or clear DTCs in the SAS control module memory.

PID/data monitor and record

- This function allows you access certain data values, input signals, calculated values, and system status information.

Flowchart

- Use the following flowchart to verify the cause of the trouble.

Note

- When performing the inspection of the past malfunction code, the applicable DTCs may be added to memory by removing or disconnecting the related parts. Inspect only the DTCs that were indicated before inspecting.
- When DTCs for a present malfunction are no longer output after present or past malfunctions or both have been repaired, be sure to perform past malfunction display cancellation to prevent repair of malfunctions that have already been repaired.

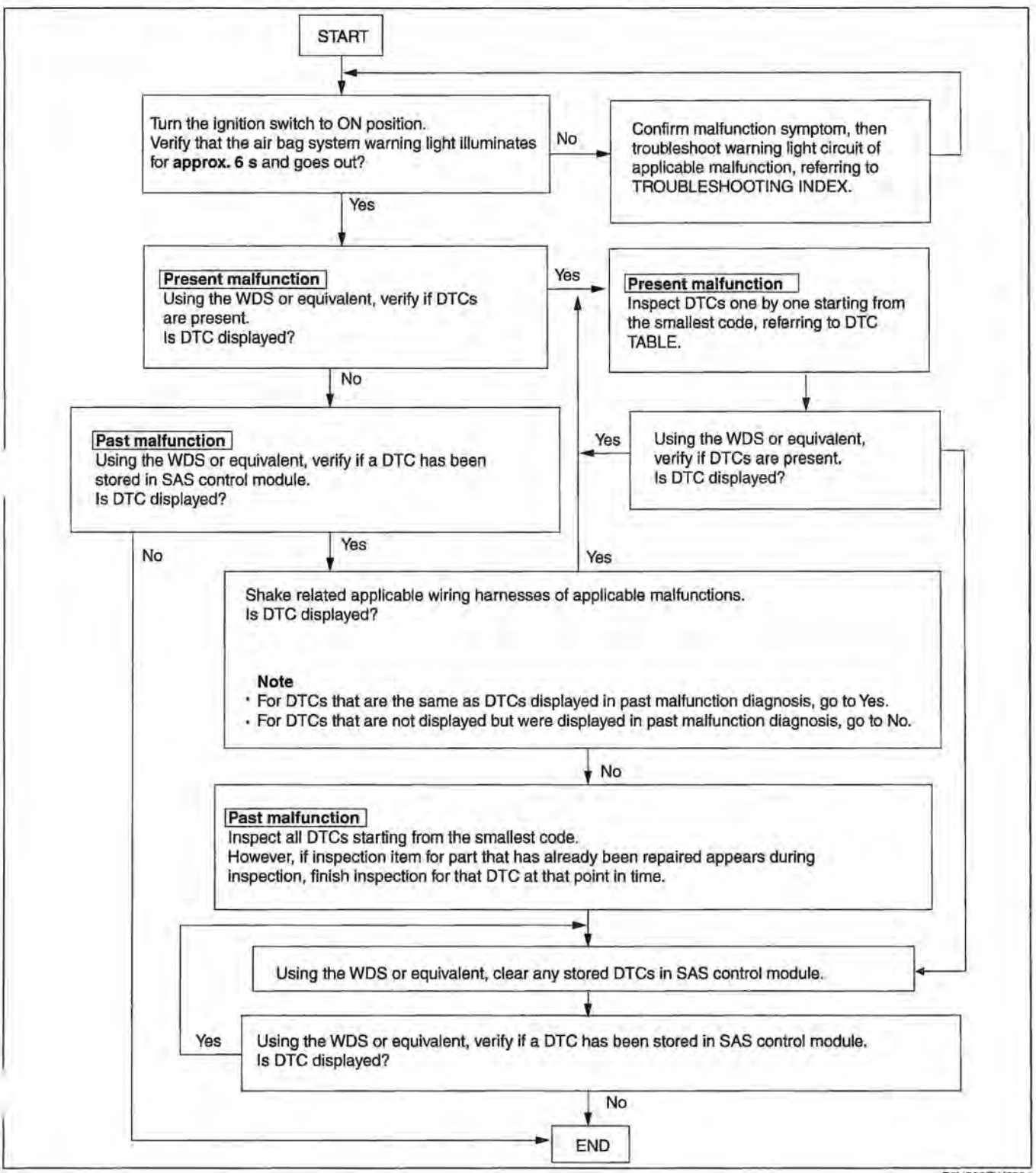

E6U802ZW5001

DTCs Reading Procedure

1. Connect the **SST** (WDS or equivalent) to the vehicle DLC-2 16-pin connector.
2. Retrieve DTC using the **SST** (WDS or equivalent).

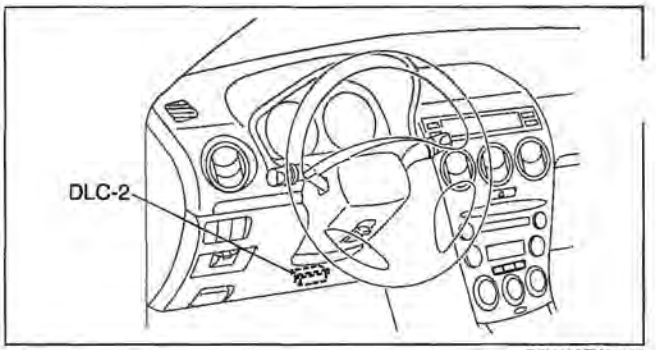

D6U802ZW7001

Clearing DTCs Procedure

1. After repairs have been made, perform the DTC reading procedure.
2. Erase DTCs using the **SST** (WDS or equivalent).
3. Ensure that the customer's concern has been resolved.

PID/Data Monitor and Record Procedure

1. Connect the **SST** (WDS or equivalent) to the vehicle DLC-2 16-pin connector.
2. Access and monitor PIDs using the **SST** (WDS or equivalent).

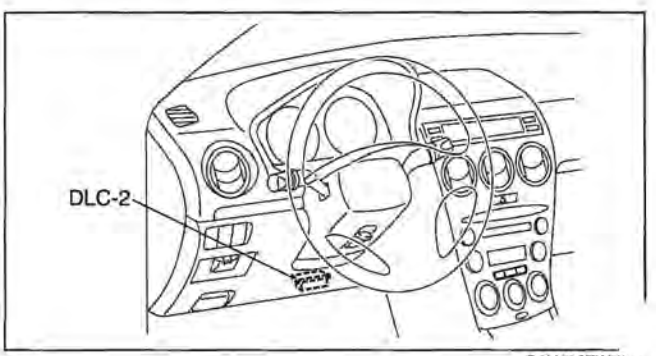

D6U802ZW700

AIR BAG SYSTEM WIRING DIAGRAM

E6U080200000W02

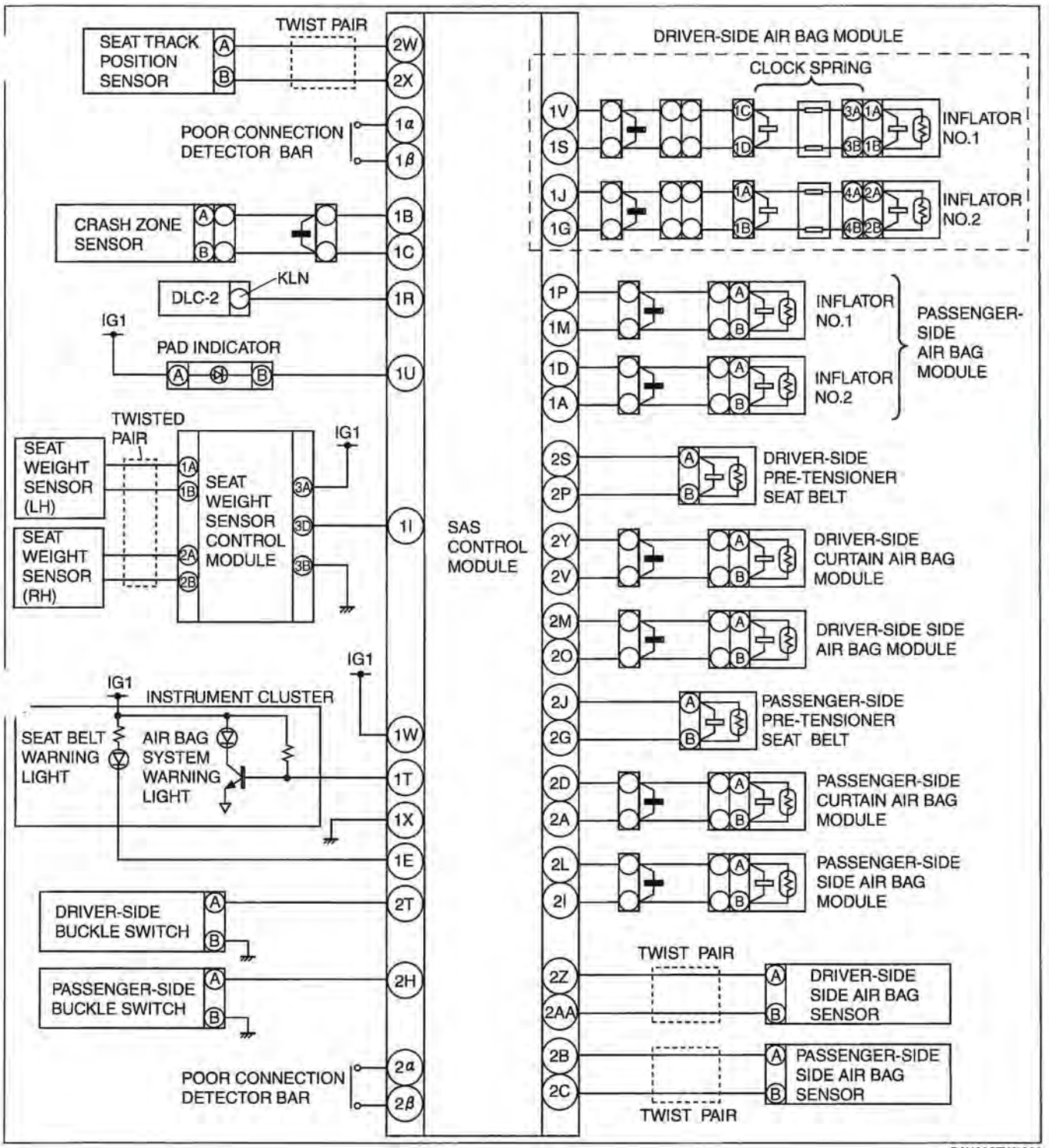

D6U802ZW7002

DTC TABLE

E6U080200000W03

- DTCs are common for present and past malfunction diagnosis.

Note

- When DTCs not shown in the DTC table are displayed, replace the SAS control module.
- If the air bag system warning light does not illuminate or remains illuminated when the ignition switch is turned to the ON position, inspect and repair the air bag system warning light circuitry and then confirm that the air bag system warning light is operational.
- The air bag system warning light will flash the DTC pattern for five cycles, and then it will remain illuminated until the ignition switch is turned to the LOCK position.

DTC				Malfunction location	Page
WDS or equivalent	Air bag system warning light				
	Flashing pattern		Priority ranking		
B1013	16	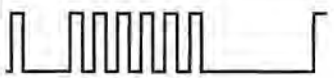	19	Seat weight sensor calibration error	(See 08–02–14 DTC B1013.)
B1017	14		4	Deployment prohibited because configuration is not set	(See 08–02–15 DTC B1017.)
B1317	—	Air bag system warning light is illuminated all the time	—	SAS control module power supply voltage increases (16.1 V or more)	(See 08–02–16 DTC B1317, B1318.)
B1318	—	Air bag system warning light is illuminated all the time	—	SAS control module power supply voltage decreases (less than 9 V)	(See 08–02–16 DTC B1317, B1318.)
B1231	13		3	SAS control module activation (deployment) control freeze	(See 08–02–15 DTC B1231.)
B1342	12	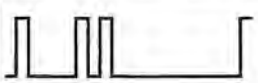	2	SAS control module	(See 08–02–18 DTC B1342.)
	—	Air bag system warning light is illuminated all the time.	1	SAS control module (DTC 12 detection circuit malfunction)	
B1869	—	Air bag system warning light is illuminated all the time.	1	Air bag system warning light system circuit open	(See 08–02–18 DTC B1869, B1870.)
	—	Air bag system warning light does not illuminate.	—	Air bag system warning light system circuit short to ground	
B1870	—	Air bag system warning light is illuminated all the time.	1	Air bag system warning light system circuit short to power supply	
B1877	33		13	Driver-side pre-tensioner seat belt system resistance high	(See 08–02–20 DTC B1877, B1878, B1879, B1885.)
B1878				Driver-side pre-tensioner seat belt system circuit short to power supply	
B1879				Driver-side pre-tensioner seat belt system circuit short to ground	

DTC				Malfunction location	Page
WDS or equivalent	Air bag system warning light				
	Flashing pattern		Priority ranking		
B1881	34		12	Passenger-side pre-tensioner seat belt system resistance high	(See 08–02–22 DTC B1881, B1882, B1883, B1886.)
B1882				Passenger-side pre-tensioner seat belt system circuit short to power supply	
B1883				Passenger-side pre-tensioner seat belt system circuit short to ground	
B1884	18	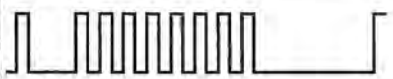	20	Passenger air bag deactivation (PAD) indicator circuit open or short to body ground	(See 08–02–24 DTC B1884, B1890.)
B1885	33		13	Driver-side pre-tensioner seat belt system resistance low	(See 08–02–20 DTC B1877, B1878, B1879, B1885.)
B1886	34	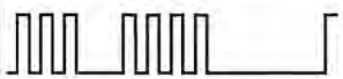	12	Passenger-side pre-tensioner seat belt system resistance low	(See 08–02–22 DTC B1881, B1882, B1883, B1886.)
B1890	18	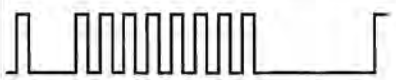	20	Passenger air bag deactivation (PAD) indicator circuit short to power supply	(See 08–02–24 DTC B1884, B1890.)
B1913	19		11	Driver-side air bag module (inflator No.1) system circuit short to ground	(See 08–02–26 DTC B1913, B1916, B1932, B1934.)
	21		10	Passenger-side air bag module (inflator No.1) system circuit short to ground	(See 08–02–28 DTC B1913, B1925, B1933, B1935.)
B1916	19		11	Driver-side air bag module (inflator No.1) system circuit short to power supply	(See 08–02–26 DTC B1913, B1916, B1932, B1934.)
B1925	21		10	Passenger-side air bag module (inflator No.1) system circuit short to power supply	(See 08–02–28 DTC B1913, B1925, B1933, B1935.)
B1932	19	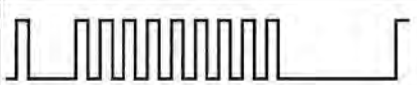	11	Driver-side air bag module (inflator No.1) system resistance high	(See 08–02–26 DTC B1913, B1916, B1932, B1934.)
B1933	21		10	Passenger-side air bag module (inflator No.1) system resistance high	(See 08–02–28 DTC B1913, B1925, B1933, B1935.)
B1934	19	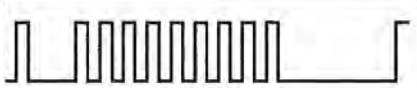	11	Driver-side air bag module (inflator No.1) system resistance low	(See 08–02–26 DTC B1913, B1916, B1932, B1934.)
B1935	21	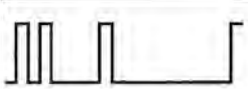	10	Passenger-side air bag module (inflator No.1) system resistance low	(See 08–02–28 DTC B1913, B1925, B1933, B1935.)

DTC				Malfunction location	Page
WDS or equivalent	Air bag system warning light				
	Flashing pattern		Priority ranking		
B1992	22		15	Driver-side side air bag module system circuit short to power supply	(See 08–02–30 DTC B1992, B1993, B1994, B1995.)
B1993				Driver-side side air bag module system circuit short to ground	
B1994				Driver-side side air bag module system resistance high	
B1995				Driver-side side air bag module system resistance low	
B1996	23		14	Passenger-side side air bag module system circuit short to power supply	(See 08–02–32 DTC B1996, B1997, B1998, B1999.)
B1997				Passenger-side side air bag module system circuit short to ground	
B1998				Passenger-side side air bag module system resistance high	
B1999				Passenger-side side air bag module system resistance low	
B2228	19	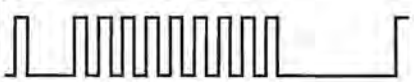	11	Driver-side air bag module (inflator No.2) system circuit short to ground	(See 08–02–34 DTC B2228, B2230, B2232, B2234.)
B2229	21		10	Passenger-side air bag module (inflator No.2) system circuit short to ground	(See 08–02–36 DTC B2229, B2231, B2233, B2235.)
B2230	19		11	Driver-side air bag module (inflator No.2) system circuit short to power supply	(See 08–02–34 DTC B2228, B2230, B2232, B2234.)
B2231	21	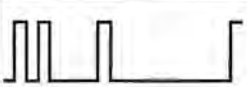	10	Passenger-side air bag module (inflator No.2) system circuit short to power supply	(See 08–02–36 DTC B2229, B2231, B2233, B2235.)
B2232	19	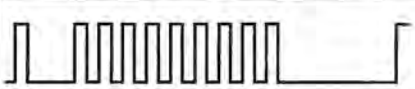	11	Driver-side air bag module (inflator No.2) system resistance high	(See 08–02–34 DTC B2228, B2230, B2232, B2234.)
B2233	21	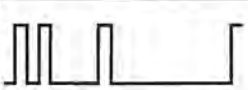	10	Passenger-side air bag module (inflator No.2) system resistance high	(See 08–02–36 DTC B2229, B2231, B2233, B2235.)
B2234	19	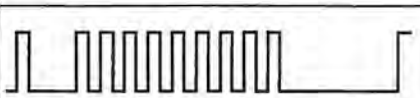	11	Driver-side air bag module (inflator No.2) system resistance low	(See 08–02–34 DTC B2228, B2230, B2232, B2234.)
B2235	21	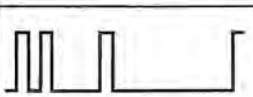	10	Passenger-side air bag module (inflator No.2) system resistance low	(See 08–02–36 DTC B2229, B2231, B2233, B2235.)
B2290	16	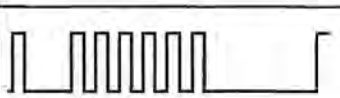	19	Seat weight sensor signal malfunction	(See 08–02–38 DTC B2290.)

DTC				Malfunction location	Page
WDS or equivalent	Air bag system warning light				
	Flashing pattern		Priority ranking		
B2296	42		9	Crash zone sensor system (communication error, sensor internal circuit abnormal)	(See 08–02–40 DTC B2296.)
B2444	43	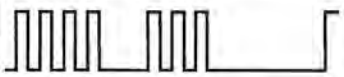	8	Driver-side side air bag sensor system (sensor internal circuit abnormal)	(See 08–02–42 DTC B2444, U2017.)
B2445	44	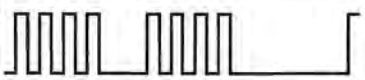	7	Passenger-side side air bag sensor system (sensor internal circuit abnormal)	(See 08–02–44 DTC B2445, U2018.)
B2477	54	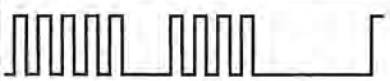	5	Configuration error	(See 08–02–46 DTC B2477.)
B2773	24		17	Driver-side curtain air bag module system resistance low	(See 08–02–46 DTC B2773, B2774, B2775, B2776.)
B2774				Driver-side curtain air bag module system resistance high	
B2775				Driver-side curtain air bag module system circuit short to ground	
B2776				Driver-side curtain air bag module system circuit short to power supply	
B2777	25		16	Passenger-side curtain air bag module system resistance low	(See 08–02–48 DTC B2777, B2778, B2779, B2780.)
B2778				Passenger-side curtain air bag module system resistance high	
B2779				Passenger-side curtain air bag module system circuit short to ground	
B2780				Passenger-side curtain air bag module system circuit short to power supply	
B2867	31	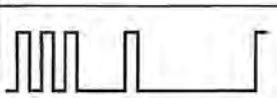	6	SAS control module connector poor connection	(See 08–02–50 DTC B2867.)
C1947	49		22	Seat track position sensor circuit short to ground	(See 08–02–52 DTC C1947, C1948, C1981.)
C1948				Seat track position sensor circuit resistance out of range	
C1981				Seat track position sensor circuit open or short to power supply	
U2017	43		8	Driver-side side air bag sensor system (communication error)	(See 08–02–42 DTC B2444, U2017.)
U2018	44		7	Passenger-side side air bag sensor system (communication error)	(See 08–02–44 DTC B2445, U2018.)

PID/DATA MONITOR TABLE

E6U080200000W04

PID name (definition)	Unit/condition	Condition/specification	SAS control module terminal
CCNT_RCM (Number of continuous DTC)	—	• DTC is detected: 1—255 • DTC is not detected: 0	—
CRSH_ST_D1 (Driver-side side air bag sensor communication state)	OK/ FAULT	• Sensor normal: OK • Sensor communication error: FAULT	2Z, 2AA
CRSH_ST_D2 (Driver-side side air bag sensor circuit state)	OK/ FAULT	• Sensor normal: OK • Sensor internal circuit error: FAULT	2Z, 2AA
CRSH_ST_F1 (Crash zone sensor communication state)	OK/ FAULT	• Sensor normal: OK • Sensor communication error: FAULT	1B, 1C
CRSH_ST_F2 (Crash zone sensor circuit state)	OK/ FAULT	• Sensor normal: OK • Sensor internal circuit error: FAULT	1B, 1C
CRSH_ST_P1 (Passenger-side side air bag sensor communication state)	OK/ FAULT	• Sensor normal: OK • Sensor communication error: FAULT	2B, 2C
CRSH_ST_P2 (Passenger-side side air bag sensor circuit state)	OK/ FAULT	• Sensor normal: OK • Sensor internal circuit error: FAULT	2B, 2C
D_ABAGR2 (Driver-side air bag module (inflator No.2) resistance)	ohm	Under any condition: 1.5—3.7 ohms	1G, 1J
D_PTENSFLT (Driver-side pre-tensioner seat belt circuit state)	SQ_LOWRES OPEN SHRT_B+ SHRT_GND Normal	• Pre-tensioner seat belt circuit resistance low: SQ_LOWRES • Related wiring harness circuit open: OPEN • Related wiring harness short to power supply: SHRT_B+ • Related wiring harness short to ground: SHRT_GND • Related wiring harness normal: Normal	2P, 2S
DABAGR (Driver-side air bag module (inflator No.1) resistance)	ohm	Under any condition: 1.5—3.7 ohms	1S, 1V
DR_BUKL (Driver-side buckle switch state)	Buckled/ Unbuckled	• Buckle switch on: Buckled • Buckle switch off: Unbuckled	2T
DR_PTENS (Driver-side pre-tensioner seat belt resistance)	ohms	Under any condition: 1.5—3.1 ohms	2P, 2S
DS_AB (Driver-side side air bag module resistance)	ohms	Under any condition: 1.4—3.2 ohms	2M, 2O
DS_AB_ST (Driver-side side air bag module circuit state)	SQ_LOWRES OPEN SHRT_B+ SHRT_GND Normal	• Pre-tensioner seat belt circuit resistance low: SQ_LOWRES • Related wiring harness circuit open: OPEN • Related wiring harness short to power supply: SHRT_B+ • Related wiring harness short to ground: SHRT_GND • Related wiring harness normal: Normal	2M, 2O
DS_CURT_ST (Driver-side curtain air bag module circuit state)	SQ_LOWRES OPEN SHRT_B+ SHRT_GND Normal	• Air bag module circuit resistance low: SQ_LOWRES • Related wiring harness circuit open: OPEN • Related wiring harness short to power supply: SHRT_B+ • Related wiring harness short to ground: SHRT_GND • Related wiring harness normal: Normal	2V, 2Y
DS1_STAT (Driver-side air bag module (inflator No.1) circuit state)	SQ_LOWRES OPEN SHRT_B+ SHRT_GND Normal	• Air bag module circuit resistance low: SQ_LOWRES • Related wiring harness circuit open: OPEN • Related wiring harness short to power supply: SHRT_B+ • Related wiring harness short to ground: SHRT_GND • Related wiring harness normal: Normal	1S, 1V

PID name (definition)	Unit/condition	Condition/specification	SAS control module terminal
DS2_STAT (Driver-side air bag module (inflator No.2) circuit state)	SQ_LOWRES OPEN SHRT_B+ SHRT_GND Normal	• Air bag module circuit resistance low: SQ_LOWRES • Related wiring harness circuit open: OPEN • Related wiring harness short to power supply: SHRT_B+ • Related wiring harness short to ground: SHRT_GND • Related wiring harness normal: Normal	1G, 1J
DSB_P_ST (Driver-side pre-tensioner seat belt circuit state)	SQ_LOWRES OPEN SHRT_B+ SHRT_GND Normal	• Pre-tensioner seat belt circuit resistance low: SQ_LOWRES • Related wiring harness circuit open: OPEN • Related wiring harness short to power supply: SHRT_B+ • Related wiring harness short to ground: SHRT_GND • Related wiring harness normal: Normal	2P, 2S
DTC_CLR_ST* (Seat weight sensor status)	Started/ Normal/ End In Process/ OCS Fault	Fault information cleared at seat weight sensor	1I
IGN_V_2 (IG1 voltage)	V	Ignition switch to ON position: B+	1W
OCS_CAL_ST* (Seat weight sensor calibration status)	Starting/ Normal End/ Commanding/ NG (Voltage)/ NG (Weight)/ In Process Timeout/ OCS Fault	• Seat weight sensor calibration start-up: Starting • Seat weight sensor calibration completed normally: Normal End • Seat weight sensor calibration command being sent: Commanding • Voltage malfunction during seat weight sensor calibration: NG (Voltage) • Weight error during seat weight sensor calibration: NG (Weight) • Seat weight sensor calibration time limit passed: Timeout • Seat weight sensor calibration being processed: In Process • Seat weight sensor or Seat weight sensor control module malfunction: OCS Fault	1I
OSC_SYS_ST* (Seat weight sensor status)	Empty/ SMALL/ Indeterminate/ LARGE/ Invalid	Occupant classification status determined by seat weight sensor	1I
OCSFLT_BTS (Passenger sensing system belt tension sensor malfunction status)	OK/ FAULT	• Sensor normal: OK • Seat weight sensor calibration error: FAULT	1I
OCSFLT_CAL (Passenger sensing system calibration status)	OK/ FAULT	• Sensor normal: OK • Seat weight sensor calibration error: FAULT	1I
OCSFLT_COM (Passenger sensing system communication status)	OK/ FAULT	• Sensor normal: OK • Seat weight sensor control module communication error: FAULT	1I
OCSFLT_L (Passenger sensing system (LH) malfunction status)	OK/ FAULT	• Sensor normal: OK • Seat weight sensor (LH) malfunction: FAULT	1I
OCSFLT_MDL (Passenger sensing system control module malfunction status)	OK/ FAULT	• Sensor normal: OK • Seat weight sensor control module malfunction: FAULT	1I
OCSFLT_R (Passenger sensing system (RH) malfunction status)	OK/ FAULT	• Sensor normal: OK • Seat weight sensor (RH) malfunction: FAULT	1I
OD_CRST_D1 n demand driver-side side r bag sensor communication state)	OK/ FAULT	• Sensor normal: OK • Sensor communication error: FAULT	2Z, 2AA
OD_CRST_D2 (On demand driver-side side air bag sensor circuit state)	OK/ FAULT	• Sensor normal: OK • Sensor internal circuit error: FAULT	2Z, 2AA

PID name (definition)	Unit/condition	Condition/specification	SAS control module terminal
OD_CRST_F1 (On demand crash zone sensor communication state)	OK/ FAULT	• Sensor normal: OK • Sensor communication error: FAULT	1B, 1C
OD_CRST_F2 (On demand crash zone sensor circuit state)	OK/ FAULT	• Sensor normal: OK • Sensor internal circuit error: FAULT	1B. 1C
OD_CRST_P1 (On demand passenger-side side air bag sensor communication state)	OK/ FAULT	• Sensor normal: OK • Sensor communication error: FAULT	2B, 2C
OD_CRST_P2 (On demand passenger-side side air bag sensor circuit state)	OK/ FAULT	• Sensor normal: OK • Sensor internal circuit error: FAULT	2B, 2C
OD_D_CURT (On demand driver-side curtain air bag module circuit fault state)	SQ_LOWRES OPEN SHRT_B+ SHRT_GND Normal	• Air bag module circuit resistance low: SQ_LOWRES • Related wiring harness circuit open: OPEN • Related wiring harness short to power supply: SHRT_B+ • Related wiring harness short to ground: SHRT_GND • Related wiring harness normal: Normal	2V, 2Y
OD_DAB1_ST (On demand driver-side air bag module (inflator No.1) circuit state)	SQ_LOWRES OPEN SHRT_B+ SHRT_GND Normal	• Air bag module circuit resistance low: SQ_LOWRES • Related wiring harness circuit open: OPEN • Related wiring harness short to power supply: SHRT_B+ • Related wiring harness short to ground: SHRT_GND • Related wiring harness normal: Normal	1S, 1V
OD_DAB2_ST (On demand driver-side air bag module (inflator No.2) circuit state)	SQ_LOWRES OPEN SHRT_B+ SHRT_GND Normal	• Air bag module circuit resistance low: SQ_LOWRES • Related wiring harness circuit open: OPEN • Related wiring harness short to power supply: SHRT_B+ • Related wiring harness short to ground: SHRT_GND • Related wiring harness normal: Normal	1G, 1J
OD_DSAB_ST (On demand driver-side side air bag module circuit state)	SQ_LOWRES OPEN SHRT_B+ SHRT_GND Normal	• Air bag module circuit resistance low: SQ_LOWRES • Related wiring harness circuit open: OPEN • Related wiring harness short to power supply: SHRT_B+ • Related wiring harness short to ground: SHRT_GND • Related wiring harness normal: Normal	2M, 2O
OD_P_CURT (On demand passenger-side curtain air bag module circuit fault state)	SQ_LOWRES OPEN SHRT_B+ SHRT_GND Normal	• Air bag module circuit resistance low: SQ_LOWRES • Related wiring harness circuit open: OPEN • Related wiring harness short to power supply: SHRT_B+ • Related wiring harness short to ground: SHRT_GND • Related wiring harness normal: Normal	2A, 2D
OD_PAB1_ST (On demand passenger-side air bag module (inflator No.1) circuit state)	SQ_LOWRES OPEN SHRT_B+ SHRT_GND Normal	• Air bag module circuit resistance low: SQ_LOWRES • Related wiring harness circuit open: OPEN • Related wiring harness short to power supply: SHRT_B+ • Related wiring harness short to ground: SHRT_GND • Related wiring harness normal: Normal	1M, 1P
OD_PAB2_ST (On demand passenger-side air bag module (inflator No.2) circuit state)	SQ_LOWRES OPEN SHRT_B+ SHRT_GND Normal	• Air bag module circuit resistance low: SQ_LOWRES • Related wiring harness circuit open: OPEN • Related wiring harness short to power supply: SHRT_B+ • Related wiring harness short to ground: SHRT_GND • Related wiring harness normal: Normal	1A,1D
OD_PSAB_ST (On demand passenger-side side air bag module circuit state)	SQ_LOWRES OPEN SHRT_B+ SHRT_GND Normal	• Air bag module circuit resistance low: SQ_LOWRES • Related wiring harness circuit open: OPEN • Related wiring harness short to power supply: SHRT_B+ • Related wiring harness short to ground: SHRT_GND • Related wiring harness normal: Normal	2I, 2L
P_ABAGR2 (Passenger-side air bag module (inflator No.2) resistance)	ohms	Under any condition: 1.4—2.9 ohms	1A, 1D

PID name (definition)	Unit/condition	Condition/specification	SAS control module terminal
P_PTENSFLT (Passenger-side pre-tensioner seat belt circuit state)	SQ_LOWRES OPEN SHRT_B+ SHRT_GND Normal	• Pre-tensioner seat belt circuit resistance low: SQ_LOWRES • Related wiring harness circuit open: OPEN • Related wiring harness short to power supply: SHRT_B+ • Related wiring harness short to ground: SHRT_GND • Related wiring harness normal: Normal	2G, 2J
PABAGR (Passenger-side air bag module (inflator No.1) resistance)	ohms	Under any condition: 1.4—2.9 ohms	1M, 1P
PS_AB (Passenger-side side air bag module resistance)	ohms	Under any condition: 1.4—3.2 ohms	2I, 2L
PS_AB_ST (Passenger-side side air bag module circuit state)	SQ_LOWRES OPEN SHRT_B+ SHRT_GND Normal	• Air bag module circuit resistance low: SQ_LOWRES • Related wiring harness circuit open: OPEN • Related wiring harness short to power supply: SHRT_B+ • Related wiring harness short to ground: SHRT_GND • Related wiring harness normal: Normal	2I, 2L
PS_BUKL (Passenger-side buckle switch state)	Buckled/ Unbuckled	• Buckle switch on: Buckled • Buckle switch off: Unbuckled	2H
PS_CURT_ST (Passenger-side curtain air bag module circuit state)	SQ_LOWRES OPEN SHRT_B+ SHRT_GND Normal	• Air bag module circuit resistance low: SQ_LOWRES • Related wiring harness circuit open: OPEN • Related wiring harness short to power supply: SHRT_B+ • Related wiring harness short to ground: SHRT_GND • Related wiring harness normal: Normal	2A, 2D
PS_PTENS (Passenger-side pre-tensioner ət belt resistance)	ohm	Under any condition: 1.5—3.1 ohms	2G, 2J
S_WEIGHT (Seat weight sensor measured weight of passenger)	Kg	Display of load (body weight) on passenger-side seat	1I
PS1_STAT (Passenger-side air bag module (inflator No.1) circuit state)	SQ_LOWRES OPEN SHRT_B+ SHRT_GND Normal	• Air bag module circuit resistance low: SQ_LOWRES • Related wiring harness circuit open: OPEN • Related wiring harness short to power supply: SHRT_B+ • Related wiring harness short to ground: SHRT_GND • Related wiring harness normal: Normal	1M, 1P
PS2_STAT (Passenger-side air bag module (inflator No.2) circuit state)	SQ_LOWRES OPEN SHRT_B+ SHRT_GND Normal	• Air bag module circuit resistance low: SQ_LOWRES • Related wiring harness circuit open: OPEN • Related wiring harness short to power supply: SHRT_B+ • Related wiring harness short to ground: SHRT_GND • Related wiring harness normal: Normal	1A, 1D
PSB_P_ST (Passenger-side pre-tensioner seat belt circuit state)	SQ_LOWRES OPEN SHRT_B+ SHRT_GND Normal	• Pre-tensioner seat belt circuit resistance low: SQ_LOWRES • Related wiring harness circuit open: OPEN • Related wiring harness short to power supply: SHRT_B+ • Related wiring harness short to ground: SHRT_GND • Related wiring harness normal: Normal	2G, 2J
TRAK_SW (Seat track position sensor state)	Forward/ Rearward	• Front seat front position: Forward • Front seat rear position: Rearward	2W, 2X

* : Used during seat weight sensor calibration setting. Not necessary for diagnostic.

DTC B1013

E6U080200000W05

DTC B1013	Seat weight sensor calibration error
DETECTION CONDITION	Warning • **Detection conditions are for understanding the DTC outline before performing an inspectio Performing an inspection according to only the detection conditions may cause injury due to an operating error, or damage the system. When performing an inspection, always follow the inspection procedure.** • Calibration set value not within valid range.
POSSIBLE CAUSE	• Weight acting on passenger-side front seat during calibration • Improperly installed passenger-side front seat part at time of calibration • Deformed floor where attached to passenger-side front seat • Deformed passenger-side front seat under-bracket or frame • Seat weight sensor deformed or malfunction • Seat weight sensor control module malfunction • SAS control module malfunction

Diagnostic procedure

STEP	INSPECTION		ACTION
1	**INSPECT SEAT WEIGHT SENSOR** Properly install the passenger-side front seat. Inspect the seat weight sensor. (See 08–10–14 SEAT WEIGHT SENSOR CALIBRATION.) Is the seat weight sensor normal?	Yes	Replace the SAS control module. (See: 08–10–12 SAS CONTROL MODULE REMOVAL/INSTALLATION.)
		No	Go to the next step.
2	**INSPECT PASSENGER-SIDE FRONT SEAT** Turn the ignition switch to the LOCK position. Disconnect the negative battery cable and wait for **1 min or more.** Remove the passenger-side front seat and visually inspect for the following: — Seat under-bracket deformation — Seat frame deformation — Seat weight sensor deformation — Foreign objects stuck in seat Are any of the parts deformed or are any foreign objects stuck in the seat?	Yes	Replace any deformed parts or remove any foreign objects. • After replacement, perform seat weight sensor calibration and reperform the DTC inspection. If the DTC is displayed, go the next step. (See 08–10–14 SEAT WEIGHT SENSOR CALIBRATION.)
		No	Go to the next step.
3	**INSPECT FLOOR** Visually inspect the installation parts of the passenger-side front seat for the following: — Abnormal floor deformation — Installation hole of passenger-side front seat is improperly positioned Is the floor normal?	Yes	Go to the next step.
		No	Repair floor deformation. • After repair, perform seat weight sensor calibration and reperform the DTC inspection. If the DTC is displayed even though the floor has been repaired, go the next step. (See 08–10–14 SEAT WEIGHT SENSOR CALIBRATION.)
4	**INSPECT SEAT WEIGHT SENSOR CONTROL MODULE** Replace the seat weight sensor. After replacement, perform seat weight sensor calibration. (See 08–10–14 SEAT WEIGHT SENSOR CALIBRATION.) Reperform the DTC inspection. Is DTC B1013 indicated?	Yes	Replace the seat weight sensor control module. (See 08–10–13 SEAT WEIGHT SENSOR CONTROL MODULE REMOVAL/INSTALLATION [EXCEPT L3 WITH TC].) (See 08–10–14 SEAT WEIGHT SENSOR CONTROL MODULE REMOVAL/INSTALLATION [L3 WITH TC].) • After replacement, perform seat weight sensor calibration and reperform the DTC inspection. If the DTC is displayed even though the seat weight sensor control module has been replaced, replace the SAS control module. (See 08–10–12 SAS CONTROL MODULE REMOVAL/INSTALLATION.)
		No	DTC troubleshooting completed.

DTC B1017

E6U080200000W28

DTC B1017	Deployment prohibited because configuration is not set
DETECTION CONDITION	**Warning** • **Detection conditions are for understanding the DTC outline before performing an inspection. Performing an inspection with only detection conditions may cause injury due to an operating error, or damage the system. When performing an inspection, always follow the inspection procedure.** • SAS control module configuration has not been set
POSSIBLE CAUSE	• SAS control module configuration has not been set • SAS control module malfunction

Diagnostic procedure

INSPECTION		ACTION
CONFIGRATION • Using the WDS or equivalent, perform SAS control module configuration. • Is DTC B1017 indicated?	Yes	Replace the SAS control module. (See 08–10–12 SAS CONTROL MODULE REMOVAL/ INSTALLATION.)
	No	DTC troubleshooting completed.

DTC B1231

E6U080200000W06

DTC B1231	SAS control module activation (deployment) control freeze
DETECTION CONDITION	**Warning** • **Detection conditions are for understanding DTC outline before performing inspection. Performing inspection with only detection conditions may cause injury due to operating error or damage the system. When performing inspection, always follow inspection procedure.** • SAS control module determined collision

Diagnostic procedure

ACTION
Replace the SAS control module. (See 08–10–12 SAS CONTROL MODULE REMOVAL/INSTALLATION)

DTC B1317, B1318

E6U080200000W29

DTC	B1317	SAS control module power supply voltage increases (16.1 V or more)
	B1318	SAS control module power supply voltage decreases (less than 9 V)
DETECTION CONDITION		**Warning** • **Detection conditions are for understanding the DTC outline before performing an inspection. Performing an inspection with only detection conditions may cause injury due to an operating error, or damage the system. When performing an inspection, always follow the inspection procedure.** • When the SAS control module power supply voltage is not **within 9—16 V**.
POSSIBLE CAUSE		• Open or short circuit in wiring harness between battery and SAS control module • SAS 10 A fuse malfunction • Battery malfunction • SAS control module malfunction

SAS CONTROL MODULE WIRING HARNESS-SIDE CONNECTOR

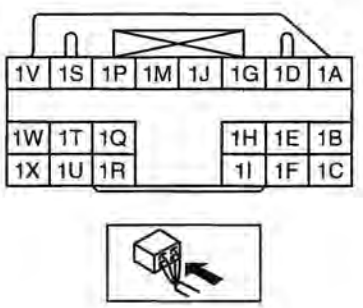

FUSE BLOCK

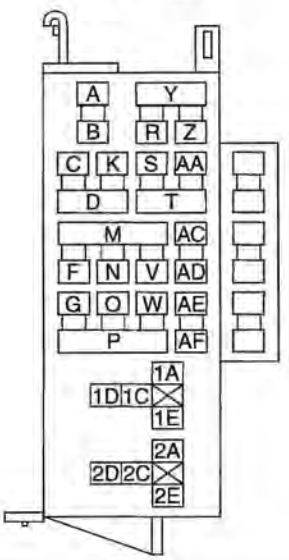

Diagnostic procedure

Step	Inspection		Action
1	**INSPECT FUSE** • Remove the SAS 10 A fuse. • Is the fuse normal?	Yes	Go to the next step.
		No	Replace the fuse.
2	**INSPECT BATTERY** • Measure the battery positive voltage. • Is the voltage **9 V—16 V**?	Yes	Go to the next step.
		No	The battery has a malfunction. Inspect the charge/discharge system.
3	**INSPECT WIRING HARNESS BETWEEN BATTERY AND FUSE BLOCK** • Turn the ignition switch to the ON position. • Measure the fuse block terminal N voltage. • Is the voltage **9 V—16 V**?	Yes	Install the fuse, then go to the next step.
		No	Repair the wiring harness between the fuse block and ignition switch.
4	**INSPECT FUSE BLOCK** **Warning** • **Handling the air bag system components improperly can accidentally deploy the air bag modules and pre-tensioner seat belts, which may seriously injure you. Read the service warnings and cautions before handling the air bag system components.** **(See 08–10–3 SERVICE WARNINGS.)** **(See 08–10–5 SERVICE CAUTIONS.)** • Turn the ignition switch to the LOCK position. • Disconnect the negative battery cable and wait for **1 min or more**. • Remove the column cover. (See 09–17–6 COLUMN COVER REMOVAL/INSTALLATION.) • Disconnect the clock spring connector. • Remove the glove compartment. (See 09–17–9 GLOVE COMPARTMENT REMOVAL/INSTALLATION.) • Disconnect the passenger-side air bag module connector. • Disconnect the driver and passenger-side curtain air bag module connector. • Disconnect the front seat connector. • Remove the SAS control module. (See 08–10–12 SAS CONTROL MODULE REMOVAL/INSTALLATION.) • Disconnect the SAS control module connector. • Turn the ignition switch to the ON position. • Measure the SAS control module terminal 1W voltage. • Is the voltage **9 V—16 V**?	Yes	Replace the SAS control module. (See 08–10–12 SAS CONTROL MODULE REMOVAL/INSTALLATION.)
		No	Repair the wiring harness between the fuse block and SAS control module.

DTC B1342

E6U080200000W07

DTC B1342	SAS control module
DETECTION CONDITION	**Warning** • **Detection conditions are for understanding DTC outline before performing inspection. Performing inspection with only detection conditions may cause injury due to operating error or damage the system. When performing inspection, always follow inspection procedure.** • Malfunction in SAS control module inner circuit
POSSIBLE CAUSE	• SAS control module malfunction

Diagnostic procedure

ACTION
• Replace the SAS control module. (See 08–10–12 SAS CONTROL MODULE REMOVAL/INSTALLATION.)

DTC B1869, B1870

E6U080200000W09

DTC	B1869	Air bag system warning light system circuit open or short to ground
	B1870	Air bag system warning light system circuit short to power supply
DETECTION CONDITION		**Warning** • **Detection conditions are for understanding DTC outline before performing inspection. Performing inspection with only detection conditions may cause injury due to operating error or damage the system. When performing inspection, always follow inspection procedure.** • Malfunction in air bag system warning light circuit
POSSIBLE CAUSE		• METER IG 15 A fuse malfunction • Instrument cluster malfunction • Malfunction of connectors between instrument cluster and SAS control module • Open or short circuit in wiring harness between METER IG 15 A fuse and instrument cluster • Open or short circuit in wiring harness between instrument cluster and SAS control module • SAS control module malfunction

INSTRUMENT CLUSTER CONNECTOR

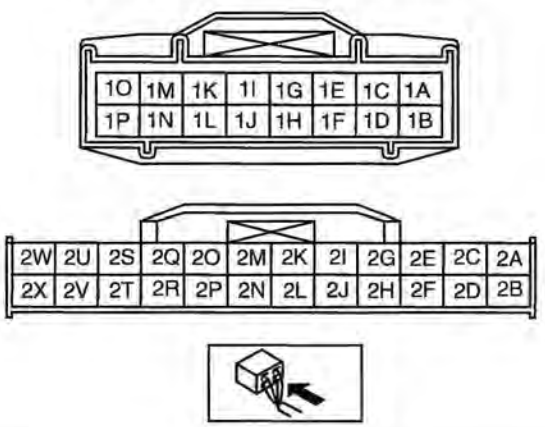

SAS CONTROL MODULE CONNECTOR

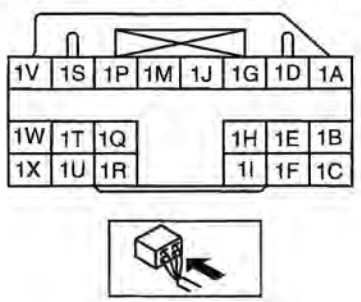

Diagnostic procedure

STEP	INSPECTION		ACTION
1	**INSPECT METER IG 15 A FUSE** • Turn the ignition switch to LOCK position. • Disconnect the negative battery cable. • Remove the METER IG 15 A fuse. • Is fuse normal?	Yes	Reinstall METER IG 15 A fuse, then go to the next step.
		No	Replace the METER IG 15 A fuse.

STEP	INSPECTION		ACTION
2	**INSPECT FOR CONTINUITY BETWEEN METER IG 15 A FUSE AND INSTRUMENT CLUSTER** • Connect the negative battery cable. • Turn the ignition switch to ON position. • Measure the voltage at instrument cluster connector terminal 2V. • Is voltage **9 V or more**?	Yes	Go to the next step.
		No	Repair the wiring harness.
3	**INSPECT WIRING HARNESS BETWEEN INSTRUMENT CLUSTER AND SAS CONTROL MODULE** **Warning** • **Handling the air bag system components improperly can accidentally operate (deploy) the air bag modules and pre-tensioner seat belts, which may seriously injure you. Read the service warnings and cautions before handling the air bag system components. (See 08–10–3 SERVICE WARNINGS.) (See 08–10–5 SERVICE CAUTIONS.)** • Turn the ignition switch to LOCK position. • Disconnect the negative battery cable and wait for **1 min or more**. • Remove the column cover. • Disconnect the clock spring connector. • Remove the glove compartment. • Disconnect the passenger-side air bag module connector. • Disconnect the driver and passenger-side curtain air bag module connectors. (Vehicles with curtain air bag) • Disconnect the driver and passenger-side side air bag module connectors. (Vehicles with side air bag) • Remove the B-pillar lower trims. (Vehicles with pre-tensioner seat belt) • Disconnect the driver and passenger-side pre-tensioner seat belt connectors. (Vehicles with pre-tensioner seat belt) • Turn up floor covering. • Disconnect the all SAS control module connectors. • Disconnect the instrument cluster. • Inspect the following wiring harness between SAS control module and instrument cluster terminals for short to ground, short to power supply, and open circuit: — 1T—1O • Is wiring harness normal?	Yes	Go to the next step.
		No	Replace the wiring harness.
4	**INSPECT AIR BAG SYSTEM WARNING LIGHT** • Connect the instrument cluster. • Turn the ignition switch to ON position. • Is air bag system warning light illuminated?	Yes	Go to the next step.
		No	Replace the instrument cluster. (See 09–22–3 INSTRUMENT CLUSTER REMOVAL/ INSTALLATION.)
5	**INSPECT AIR BAG SYSTEM WARNING LIGHT** • Using jumper wire, ground instrument cluster terminal 1O to body. • Does air bag system warning light go out?	Yes	**Present malfunction diagnosis:** • Replace the SAS control module. (See 08–10–12 SAS CONTROL MODULE REMOVAL/ INSTALLATION.) **Past malfunction diagnosis:** • Troubleshooting completed.
		No	Replace the instrument cluster. (See 09–22–3 INSTRUMENT CLUSTER REMOVAL/ INSTALLATION.)

DTC B1877, B1878, B1879, B1885

E6U080200000W10

DTC	B1877	Driver-side pre-tensioner seat belt system resistance high
	B1878	Driver-side pre-tensioner seat belt system circuit short to power supply
	B1879	Driver-side pre-tensioner seat belt system circuit short to ground
	B1885	Driver-side pre-tensioner seat belt system resistance low
DETECTION CONDITION		**Warning** • **Detection conditions are for understanding DTC outline before performing inspection. Performing inspection with only detection conditions may cause injury due to operating error or damage the system. When performing inspection, always follow inspection procedure.** • Abnormal resistance (other than **1.5—3.1 ohms**) detected in driver-side pre-tensioner seat belt circuit • Malfunction in wiring harness between driver-side pre-tensioner seat belt and SAS control module
POSSIBLE CAUSE		• Open or short circuit in wiring harness between driver-side pre-tensioner seat belt and SAS control module • Driver-side pre-tensioner seat belt malfunction • SAS control module malfunction

DRIVER-SIDE PRE-TENSIONER SEAT BELT CONNECTOR

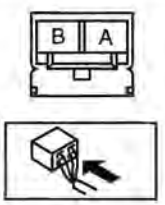

Diagnostic procedure

STEP	INSPECTION		ACTION
1	**INSPECT DRIVER-SIDE PRE-TENSIONER SEAT BELT** • Check the following PID/DATA monitor, using **SST** (WDS or equivalent). (See 08–02–10 PID/DATA MONITOR TABLE.) — DR_PTENS • Is resistance of driver-side pre-tensioner seat belt normal? — Resistance: **1.5—3.1 ohms**	Yes	**Present malfunction diagnosis:** • Replace the SAS control module. (See 08–10–12 SAS CONTROL MODULE REMOVAL/ INSTALLATION.) **Past malfunction diagnosis:** • Troubleshooting completed.
		No	Go to the next step.
2	**INSPECT DRIVER-SIDE PRE-TENSIONER SEAT BELT CONNECTOR** **Warning** • **Handling the air bag system components improperly can accidentally operate (deploy) the air bag modules and pre-tensioner seat belts, which may seriously injure you. Read the service warnings and cautions before handling the air bag system components. (See 08–10–3 SERVICE WARNINGS.) (See 08–10–5 SERVICE CAUTIONS.)** • Turn the ignition switch to LOCK position. • Disconnect the negative battery cable and wait for **1 min or more**. • Remove the driver-side B-pillar lower trim. • Disconnect the driver-side pre-tensioner seat belt connector. • Is there cracking or chipping in driver-side pre-tensioner seat belt connector?	Yes	Replace the wiring harness.
		No	Go to the next step.
3	**VERIFY WHETHER MALFUNCTION IS IN DRIVER-SIDE PRE-TENSIONER SEAT BELT OR RELATED WIRING HARNESS** • Connect the leads of **SST** (Fuel and thermometer checker) or apply 2-ohm resistor to driver-side pre-tensioner seat belt terminal A and B. • Set resistance of **SST** (Fuel and thermometer checker) to 2 ohms. • Connect the negative battery cable. • Turn the ignition switch to ON position. • Check the following PID/DATA monitor, using **SST** (WDS or equivalent). (See 08–02–10 PID/DATA MONITOR TABLE.) — DSB_P_ST • Is related wiring harness normal?	Yes	Replace the driver-side pre-tensioner seat belt. (See 08–11–3 FRONT SEAT BELT REMOVAL/ INSTALLATION.)
		No	Replace the wiring harness, then go to next step.
4	**INSPECT SAS CONTROL MODULE** • Turn the ignition switch to LOCK position. • Disconnect the negative battery cable and wait for **1 min or more**. • Connect the driver-side pre-tensioner seat belt connector. • Are any one or all of the following DTCs displayed? — B1877 — B1878 — B1879 — B1885	Yes	**Present malfunction diagnosis:** • Replace the SAS control module. (See 08–10–12 SAS CONTROL MODULE REMOVAL/ INSTALLATION.) **Past malfunction diagnosis:** • Troubleshooting completed.
		No	Troubleshooting completed.

DTC B1881, B1882, B1883, B1886

E6U080200000W11

DTC	B1881	Passenger-side pre-tensioner seat belt system resistance high
	B1882	Passenger-side pre-tensioner seat belt system circuit short to power supply
	B1883	Passenger-side pre-tensioner seat belt system circuit short to ground
	B1886	Passenger-side pre-tensioner seat belt system resistance low
DETECTION CONDITION		Warning • **Detection conditions are for understanding DTC outline before performing inspection. Performing inspection with only detection conditions may cause injury due to operating error or damage the system. When performing inspection, always follow inspection procedure.** • Abnormal resistance (other than **1.5—3.1 ohms**) detected in passenger-side pre-tensioner seat belt circuit • Malfunction in wiring harness between passenger-side pre-tensioner seat belt and SAS control module
POSSIBLE CAUSE		• Open or short circuit in wiring harness between passenger-side pre-tensioner seat belt and SAS control module • Passenger-side pre-tensioner seat belt malfunction • SAS control module malfunction

PASSENGER-SIDE PRE-TENSIONER SEAT BELT CONNECTOR

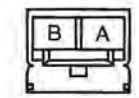



Diagnostic procedure

STEP	INSPECTION		ACTION
1	**INSPECT PASSENGER-SIDE PRE-TENSIONER SEAT BELT** • Check the following PID/DATA monitor, using **SST** (WDS or equivalent). (See 08–02–10 PID/DATA MONITOR TABLE.) — PS_PTENS • Is resistance of passenger-side pre-tensioner seat belt normal? — Resistance: **1.5—3.1 ohms**	Yes	**Present malfunction diagnosis:** • Replace the SAS control module. (See 08–10–12 SAS CONTROL MODULE REMOVAL/ INSTALLATION.) **Past malfunction diagnosis:** • Troubleshooting completed.
		No	Go to the next step.
2	**INSPECT PASSENGER-SIDE PRE-TENSIONER SEAT BELT CONNECTOR** **Warning** • **Handling the air bag system components improperly can accidentally operate (deploy) the air bag modules and pre-tensioner seat belts, which may seriously injure you. Read the service warnings and cautions before handling the air bag system components. (See 08–10–3 SERVICE WARNINGS.) (See 08–10–5 SERVICE CAUTIONS.)** • Turn the ignition switch to LOCK position. • Disconnect the negative battery cable and wait for **1 min or more**. • Remove the passenger-side B-pillar lower trim. • Disconnect the passenger-side pre-tensioner seat belt connector. • Is there cracking or chipping in passenger-side pre-tensioner seat belt connector?	Yes	Replace the wiring harness.
		No	Go to the next step.
3	**VERIFY WHETHER MALFUNCTION IS IN PASSENGER-SIDE PRE-TENSIONER SEAT BELT OR RELATED WIRING HARNESS** • Connect the leads of **SST** (Fuel and thermometer checker) or apply 2-ohm resistor to passenger-side pre-tensioner seat belt terminal A and B. • Set resistance of **SST** (Fuel and thermometer checker) to 2 ohms. • Connect the negative battery cable. • Turn the ignition switch to ON position. • Check the following PID/DATA monitor, using **SST** (WDS or equivalent). (See 08–02–10 PID/DATA MONITOR TABLE.) — PSB_P_ST • Is related wiring harness normal?	Yes	Replace the passenger-side pre-tensioner seat belt. (See 08–11–3 FRONT SEAT BELT REMOVAL/ INSTALLATION.)
		No	Replace the wiring harness, then go to next step.
4	**INSPECT SAS CONTROL MODULE** • Turn the ignition switch to LOCK position. • Disconnect the negative battery cable and wait for **1 min or more**. • Connec the passenger-side pre-tensioner seat belt connector. • Are any one or all of the following DTCs displayed? — B1881 — B1882 — B1883 — B1886	Yes	**Present malfunction diagnosis:** • Replace the SAS control module. (See 08–10–12 SAS CONTROL MODULE REMOVAL/ INSTALLATION.) **Past malfunction diagnosis:** • Troubleshooting completed.
		No	Troubleshooting completed.

DTC B1884, B1890

E6U080200000W08

DTC	B1884	Passenger air bag deactivation (PAD) indicator circuit open or short to body ground
	B1890	Passenger air bag deactivation (PAD) indicator circuit short to power supply
DETECTION CONDITION		**Warning** • **Detection conditions are for understanding the DTC outline before performing an inspection. Performing an inspection according to only the detection conditions may cause injury due to an operating error, or damage the system. When performing an inspection, always follow the inspection procedure.** • Malfunction in PAD indicator circuit
POSSIBLE CAUSE		• Open or short circuit in wiring harness between PAD indicator and SAS control module • Open circuit in wiring harness between battery and PAD indicator • PAD indicator malfunction • SAS control module malfunction

SAS CONTROL MODULE CONNECTOR

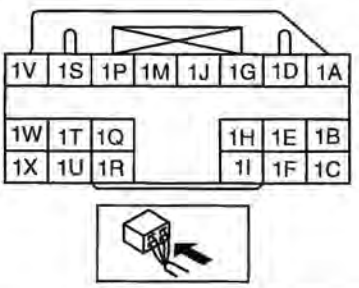

PAD INDICATOR CONNECTOR

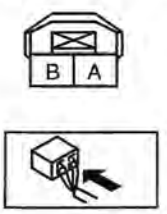

Diagnostic procedure

STEP	INSPECTION		ACTION
1	**INSPECT OPERATION OF PAD INDICATOR** • Turn the ignition switch to the ON position. • Does the PAD indicator illuminate?	Yes	Go to the next step.
		No	Go to Step 6.
2	**INSPECT FUSE** • Remove the SAS 10 A fuse. • Is the fuse normal?	Yes	Install the fuse, then go to the next step.
		No	Replace the fuse.
3	**INSPECT BATTERY** • Measure the battery positive voltage. • Is the voltage **9 V—16 V**?	Yes	Go to the next step.
		No	Battery is malfunctioning Inspect the charge/discharge system.
4	**INSPECT WIRING HARNESS BETWEEN BATTERY AND PAD INDICATOR** • Turn the ignition switch to the ON position. • Measure the PAD indicator terminal A voltage. • Is the voltage **9 V or more**?	Yes	Go to the next step.
		No	Repair the wiring harness between the battery and PAD indicator.
5	**INSPECT PAD INDICATOR** • Ground PAD indicator connector terminal B using a jumper wire. • Turn the ignition switch to the ON position. • Does the PAD indicator illuminate?	Yes	Go to the next step.
		No	Replace the air bag wiring harness.
6	**INSPECT WIRING HARNESS BETWEEN PAD INDICATOR AND SAS CONTROL MODULE** **Warning** • **Handling the air bag system components improperly can accidentally deploy the air bag modules and pre-tensioner front buckles, which may seriously injure you. Read the service warnings before handling the air bag system components. (See 08–10–3 SERVICE WARNINGS.) (See 08–10–5 SERVICE CAUTIONS.)** • Turn the ignition switch to the LOCK position. • Disconnect the negative battery cable and wait for **1 min or more**. • Remove the column cover. • Disconnect the clock spring connector. • Disconnect the passenger-side air bag module connector. • Disconnect the driver and passenger-side curtain air bag module connector. • Disconnect the front seat connector. • Remove the console. • Disconnect the SAS control module connector. • Inspect the wiring harness between PAD indicator terminal B and SAS control module terminal 1U for the following: — Short to ground — Short to power supply — Open circuit • Is the wiring harness normal?	Yes	Replace the SAS control module. (See 08–10–12 SAS CONTROL MODULE REMOVAL/ INSTALLATION.)
		No	Replace the air bag wiring harness.

DTC B1913, B1916, B1932, B1934

E6U080200000W12

DTC	B1913	Driver-side air bag module (inflator No.1) system circuit short to ground
	B1916	Driver-side air bag module (inflator No.1) system circuit short to power supply
	B1932	Driver-side air bag module (inflator No.1) system resistance high
	B1934	Driver-side air bag module (inflator No.1) system resistance low
DETECTION CONDITION		**Warning** • **Detection conditions are for understanding DTC outline before performing inspection. Performing inspection with only detection conditions may cause injury due to operating error or damage the system. When performing inspection, always follow inspection procedure.** • Abnormal resistance (other than **1.5—3.7 ohms**) detected in driver-side air bag module (inflator No.1) circuit • Malfunction in wiring harness between driver-side air bag module (inflator No.1) and SAS control module
POSSIBLE CAUSE		• Open or short circuit in wiring harness between clock spring and SAS control module • Clock spring malfunction • Driver-side air bag module (inflator No.1) malfunction • SAS control module malfunction

SAS CONTROL MODULE CONNECTOR

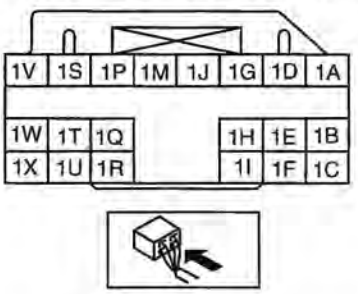

CLOCK SPRING CONNECTOR

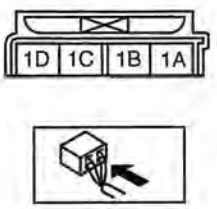

Diagnostic procedure

STEP	INSPECTION		ACTION
1	**INSPECT DRIVER-SIDE AIR BAG MODULE (INFLATOR NO.1)** • Check the following PID/DATA monitor, using **SST** (WDS or equivalent). (See 08–02–10 PID/DATA MONITOR TABLE.) — DABAGR • Is resistance value of driver-side air bag module normal? — Resistance: **1.5—3.7 ohms**	Yes	**Present malfunction diagnosis:** • Replace the SAS control module. (See 08–10–12 SAS CONTROL MODULE REMOVAL/ INSTALLATION.) **Past malfunction diagnosis:** • Troubleshooting completed.
		No	Go to the next step.
2	**INSPECT DRIVER-SIDE AIR BAG MODULE CONNECTOR (CLOCK SPRING)** **Warning** • **Handling the air bag system components improperly can accidentally operate (deploy) the air bag modules and pre-tensioner seat belts, which may seriously injure you. Read the service warnings and cautions before handling the air bag system components. (See 08–10–3 SERVICE WARNINGS.) (See 08–10–5 SERVICE CAUTIONS.)** • Turn the ignition switch to LOCK position. • Disconnect the negative battery cable and wait for **1 min or more**. • Remove the driver-side air bag module. • Is there cracking or chipping in driver-side air bag module connector?	Yes	Replace the wiring harness.
		No	Go to the next step.

STEP	INSPECTION		ACTION
3	**VERIFY WHETHER MALFUNCTION IS IN DRIVER-SIDE AIR BAG MODULE (INFLATOR NO.1) OR RELATED WIRING HARNESS** • Connect leads of **SST** (Fuel and thermometer checker) or apply 2-ohm resistor to driver-side air bag module (inflator No.1) terminal 3A and 3B, and driver-side air bag module (inflator No.2) terminal 4A and 4B. • Set resistance of **SST** (Fuel and thermometer checker) to 2 ohms. • Connect the negative battery cable. • Turn the ignition switch to ON position. • Check the following PID/DATA monitor, using **SST** (WDS or equivalent). (See 08–02–10 PID/DATA MONITOR TABLE.) — OD_DAB1_ST • Is related wiring harness normal?	Yes	Replace the driver-side air bag module. (See 08–10–6 DRIVER-SIDE AIR BAG MODULE REMOVAL/INSTALLATION.)
		No	Go to the next step.
4	**INSPECT CLOCK SPRING** • Inspect the clock spring. (See 08–10–17 CLOCK SPRING INSPECTION.) • Is clock spring normal?	Yes	Go to the next step.
		No	Replace the clock spring. (See 08–10–15 CLOCK SPRING REMOVAL/ INSTALLATION.)
5	**INSPECT WIRING HARNESS BETWEEN CLOCK SPRING AND SAS CONTROL MODULE** • Turn the ignition switch to LOCK position. • Disconnect the negative battery cable and wait for **1 min or more**. • Remove the column cover. • Disconnect the clock spring connector. • Remove the glove compartment. • Disconnect the passenger-side air bag module connector. • Disconnect the driver and passenger-side side air bag module connectors. (Vehicles with side air bag) • Disconnect the driver and passenger-side curtain air bag module connectors. (Vehicles with curtain air bag) • Remove the B-pillar lower trims. (Vehicles with pre-tensioner seat belt) • Disconnect the driver and passenger-side pre-tensioner seat belt connectors. (Vehicles with pre-tensioner seat belt) • Turn up floor covering. • Disconnect the all SAS control module connectors. • Inspect the following wiring harnesses between SAS control module and clock spring terminals for short to ground, short to power supply, and open circuit: — 1S—1D — 1V—1C • Is wiring harness normal?	Yes	**Present malfunction diagnosis:** • Replace the SAS control module. (See 08–10–12 SAS CONTROL MODULE REMOVAL/ INSTALLATION) **Past malfunction diagnosis:** • Troubleshooting completed.
		No	Replace the wiring harnesses.

DTC B1913, B1925, B1933, B1935

E6U080200000W13

DTC	B1913	**Passenger-side air bag module (inflator No.1) system circuit short to ground**
	B1925	**Passenger-side air bag module (inflator No.1) system circuit short to power supply**
	B1933	**Passenger-side air bag module (inflator No.1) system resistance high**
	B1935	**Passenger-side air bag module (inflator No.1) system resistance low**
DETECTION CONDITION		**Warning** • **Detection conditions are for understanding DTC outline before performing inspection. Performing inspection with only detection conditions may cause injury due to operating error or damage the system. When performing inspection, always follow inspection procedure.** • Abnormal resistance (other than **1.4—2.9 ohms**) detected in passenger-side air bag module (inflator No.1) circuit • Malfunction in wiring harness between passenger-side air bag module (inflator No.1) and SAS control module
POSSIBLE CAUSE		• Open or short circuit in wiring harness between passenger-side air bag module (inflator No.1) and SAS control module • Passenger-side air bag module (inflator No.1) malfunction • SAS control module malfunction

PASSENGER-SIDE AIR BAG MODULE CONNECTOR

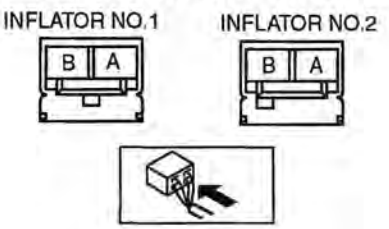

Diagnostic procedure

STEP	INSPECTION		ACTION
1	**INSPECT PASSENGER-SIDE AIR BAG MODULE (INFLATOR NO.1)** • Check the following PID/DATA monitor, using **SST** (WDS or equivalent). (See 08–02–10 PID/DATA MONITOR TABLE.) — PABAGR • Is resistance of passenger-side air bag module normal? — Resistance: **1.4—2.9 ohms**	Yes	**Present malfunction diagnosis:** • Replace the SAS control module. (See 08–10–12 SAS CONTROL MODULE REMOVAL/INSTALLATION.) **Past malfunction diagnosis:** • Troubleshooting completed.
		No	Go to the next step.
2	**INSPECT PASSENGER-SIDE AIR BAG MODULE (INFLATOR NO.1) CONNECTOR** **Warning** • **Handling air bag system components improperly can accidentally deploy air bag modules and pre-tensioner seat belts, which may seriously injure you. Read air bag system service warnings and cautions before handling air bag system components. (See 08–10–3 SERVICE WARNINGS.) (See 08–10–5 SERVICE CAUTIONS.)** • Turn the ignition switch to LOCK position. • Disconnect the negative battery cable and wait for **1 min or more**. • Remove the glove compartment. • Disconnect the passenger-side air bag module connector. • Is there cracking or chipping in passenger-side air bag module connector?	Yes	Replace wiring harness.
		No	Go to the next step.
3	**VERIFY WHETHER MALFUNCTION IS IN PASSENGER-SIDE AIR BAG MODULE (INFLATOR NO.1) OR RELATED WIRING HARNESS** • Connect leads of **SST** (Fuel and thermometer checker) or apply 2-ohm resistor to passenger-side air bag module (inflator No.1) terminal A and B, and passenger-side air bag module (inflator No.2) terminal A and B. • Set resistance of **SST** (Fuel and thermometer checker) to 2 ohms. • Connect the negative battery cable. • Turn the ignition switch to ON position. • Check the following PID/DATA monitor, using **SST** (WDS or equivalent). (See 08–02–10 PID/DATA MONITOR TABLE.) — OD_PAB1_ST • Is related wiring harness normal?	Yes	Replace the passenger-side air bag module. (See 08–10–7 PASSENGER-SIDE AIR BAG MODULE REMOVAL/INSTALLATION.)
		No	Replace the wiring harness, then go to the next step.
4	**INSPECT SAS CONTROL MODULE** • Turn the ignition switch to LOCK position. • Disconnect the negative battery cable and wait for **1 min or more**. • Connect the passenger-side air bag module connector. • Are any one or all of the following DTCs displayed? — B1913 — B1925 — B1933 — B1935	Yes	**Present malfunction diagnosis:** • Replace the SAS control module. (See 08–10–12 SAS CONTROL MODULE REMOVAL/INSTALLATION.) **Past malfunction diagnosis:** • Troubleshooting completed.
		No	Troubleshooting completed.

DTC B1992, B1993, B1994, B1995

E6U080200000W14

DTC	B1992	**Driver-side side air bag module system circuit short to power supply**
	B1993	**Driver-side side air bag module system circuit short to ground**
	B1994	**Driver-side side air bag module system resistance high**
	B1995	**Driver-side side air bag module system resistance low**
DETECTION CONDITION		**Warning** • **Detection conditions are for understanding DTC outline before performing inspection. Performing inspection with only detection conditions may cause injury due to operating error or damage the system. When performing inspection, always follow inspection procedure.** • Abnormal resistance (other than **1.4—3.2 ohms**) detected in driver-side side air bag module circuit • Malfunction in wiring harness between driver-side side air bag module and SAS control module
POSSIBLE CAUSE		• Open or short circuit in wiring harness between driver-side side air bag module and SAS control module • Driver-side side air bag module malfunction • SAS control module malfunction

DRIVER-SIDE SIDE AIR BAG MODULE CONNECTOR

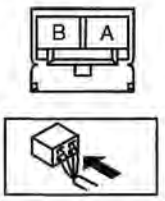

Diagnostic procedure

STEP	INSPECTION		ACTION
1	**INSPECT DRIVER-SIDE SIDE AIR BAG MODULE** • Check the following PID/DATA monitor, using **SST** (WDS or equivalent). (See 08–02–10 PID/DATA MONITOR TABLE.) — DS_AB • Is resistance of driver-side side air bag module normal? — Resistance: **1.4—3.2 ohms**	Yes	**Present malfunction diagnosis:** • Replace the SAS control module. (See 08–10–12 SAS CONTROL MODULE REMOVAL/ INSTALLATION.) **Past malfunction diagnosis:** • Troubleshooting completed.
		No	Go to the next step.
2	**INSPECT DRIVER-SIDE SIDE AIR BAG MODULE CONNECTOR** **Warning** • **Handling the air bag system components improperly can accidentally operate (deploy) the air bag modules and pre-tensioner seat belts, which may seriously injure you. Read the service warnings and cautions before handling the air bag system components. (See 08–10–3 SERVICE WARNINGS.) (See 08–10–5 SERVICE CAUTIONS.)** • Turn the ignition switch to LOCK position. • Disconnect the negative battery cable and wait for **1 min or more**. • Remove the driver-side side air bag module. • Is there cracking or chipping in driver-side side air bag module connector?	Yes	Replace the wiring harness.
		No	Go to the next step.
3	**VERIFY WHETHER MALFUNCTION IS IN DRIVER-SIDE SIDE AIR BAG MODULE OR RELATED WIRING HARNESS** • Connect leads of **SST** (Fuel and thermometer checker) or apply 2-ohm resistor to driver-side side air bag module terminal A and B. • Set resistance of **SST** (Fuel and thermometer checker) to 2 ohms. • Connect the negative battery cable. • Turn the ignition switch to ON position. • Check the following PID/DATA monitor, using **SST** (WDS or equivalent). (See 08–02–10 PID/DATA MONITOR TABLE.) — OD_DSAB_ST • Is related wiring harness normal?	Yes	Replace the driver-side side air bag module. (See 08–10–8 SIDE AIR BAG MODULE REMOVAL/ INSTALLATION.)
		No	Replace the wiring harness, then go to next step.
4	**INSPECT SAS CONTROL MODULE** • Turn the ignition switch to LOCK position. • Disconnect the negative battery cable and wait for **1 min or more.** • Connect the driver-side side air bag module connector. • Are any one or all of the following DTCs displayed? — B1992 — B1993 — B1994 — B1995	Yes	**Present malfunction diagnosis:** • Replace the SAS control module. (See 08–10–12 SAS CONTROL MODULE REMOVAL/ INSTALLATION.) **Past malfunction diagnosis:** • Troubleshooting completed.
		No	Troubleshooting completed.

DTC B1996, B1997, B1998, B1999

E6U080200000W15

DTC	B1996	Passenger-side side air bag module system circuit short to power supply
	B1997	Passenger-side side air bag module system circuit short to ground
	B1998	Passenger-side side air bag module system resistance high
	B1999	Passenger-side side air bag module system resistance low
DETECTION CONDITION		**Warning** • **Detection conditions are for understanding DTC outline before performing inspection. Performing inspection with only detection conditions may cause injury due to operating error or damage the system. When performing inspection, always follow inspection procedure.** • Abnormal resistance (other than **1.4—3.2 ohms**) detected in passenger-side side air bag module circuit • Malfunction in wiring harness between passenger-side side air bag module and SAS control module
POSSIBLE CAUSE		• Open or short circuit in wiring harness between passenger-side side air bag module and SAS control module • Passenger-side side air bag module malfunction • SAS control module malfunction

PASSENGER-SIDE SIDE AIR BAG MODULE CONNECTOR

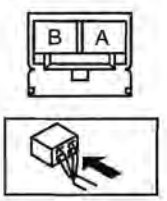

Diagnostic procedure

STEP	INSPECTION		ACTION
1	**INSPECT PASSENGER-SIDE SIDE AIR BAG MODULE** • Check the following PID/DATA monitor, using **SST** (WDS or equivalent). (See 08–02–10 PID/DATA MONITOR TABLE.) — PS_AB • Is resistance of passenger-side side air bag module normal? — Resistance: **1.4—3.2 ohms**	Yes	**Present malfunction diagnosis:** • Replace the SAS control module. (See 08–10–12 SAS CONTROL MODULE REMOVAL/ INSTALLATION.) **Past malfunction diagnosis:** • Troubleshooting completed.
		No	Go to the next step.
2	**INSPECT PASSENGER-SIDE SIDE AIR BAG MODULE CONNECTOR** **Warning** • **Handling the air bag system components improperly can accidentally operate (deploy) the air bag modules and pre-tensioner seat belts, which may seriously injure you. Read the service warnings and cautions before handling the air bag system components. (See 08–10–3 SERVICE WARNINGS.) (See 08–10–5 SERVICE CAUTIONS.)** • Turn the ignition switch to LOCK position. • Disconnect the negative battery cable and wait for **1 min or more.** • Remove the passenger-side side air bag module. • Is there cracking or chipping in passenger-side side air bag module connector?	Yes	Replace wiring harness.
		No	Go to the next step.
3	**VERIFY WHETHER MALFUNCTION IS IN PASSENGER-SIDE SIDE AIR BAG MODULE OR RELATED WIRING HARNESS** • Connect leads of **SST** (Fuel and thermometer checker) or apply 2-ohm resistor to passenger-side side air bag module terminal A and B. • Set resistance of **SST** (Fuel and thermometer checker) to 2 ohms. • Connect the negative battery cable. • Turn the ignition switch to ON position. • Check the following PID/DATA monitor, using **SST** (WDS or equivalent). (See 08–02–10 PID/DATA MONITOR TABLE.) — OD_PSAB_ST • Is related wiring harness normal?	Yes	Replace the passenger-side side air bag module. (See 08–10–8 SIDE AIR BAG MODULE REMOVAL/ INSTALLATION.)
		No	Replace the wiring harness, then go to the next step.
4	**INSPECT SAS CONTROL MODULE** • Turn the ignition switch to LOCK position. • Disconnect the negative battery cable and wait for **1 min or more.** • Connect the passenger-side side air bag module connector. • Are any one or all of the following DTCs displayed? — B1996 — B1997 — B1998 — B1999	Yes	**Present malfunction diagnosis:** • Replace the SAS control module. (See 08–10–12 SAS CONTROL MODULE REMOVAL/ INSTALLATION.) **Past malfunction diagnosis:** • Troubleshooting completed.
		No	Troubleshooting completed.

DTC B2228, B2230, B2232, B2234

E6U080200000W16

DTC	B2228	Driver-side air bag module (inflator No.2) system circuit short to ground
	B2230	Driver-side air bag module (inflator No.2) system circuit short to power supply
	B2232	Driver-side air bag module (inflator No.2) system resistance high
	B2234	Driver-side air bag module (inflator No.2) system resistance low
DETECTION CONDITION		**Warning** • **Detection conditions are for understanding DTC outline before performing inspection. Performing inspection with only detection conditions may cause injury due to operating error or damage the system. When performing inspection, always follow inspection procedure.** • Abnormal resistance (other than **1.5—3.7 ohms**) detected in driver-side air bag module (inflator No.2) circuit • Malfunction in wiring harness between driver-side air bag module (inflator No.2) and SAS control module
POSSIBLE CAUSE		• Open or short circuit in wiring harness between clock spring and SAS control module • Clock spring malfunction • Driver-side air bag module (inflator No.2) malfunction • SAS control module malfunction

SAS CONTROL MODULE CONNECTOR

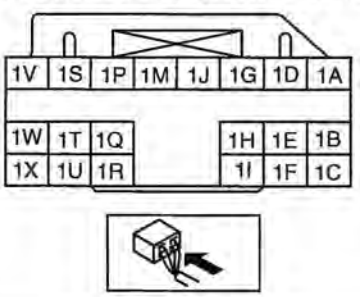

CLOCK SPRING CONNECTOR

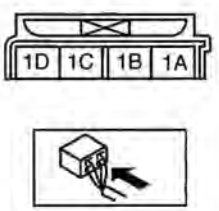

Diagnostic procedure

STEP	INSPECTION		ACTION
1	**INSPECT DRIVER-SIDE AIR BAG MODULE (INFLATOR NO.2)** • Check the following PID/DATA monitor, using **SST** (WDS or equivalent). (See 08–02–10 PID/DATA MONITOR TABLE.) — D_ABAGR2 • Is resistance of driver-side air bag module normal? — Resistance: **1.5—3.7 ohms**	Yes	**Present malfunction diagnosis:** • Replace the SAS control module. (See 08–10–12 SAS CONTROL MODULE REMOVAL/ INSTALLATION.) **Past malfunction diagnosis:** • Troubleshooting completed.
		No	Go to the next step.
2	**INSPECT DRIVER-SIDE AIR BAG MODULE CONNECTOR (CLOCK SPRING)** **Warning** • **Handling the air bag system components improperly can accidentally operate (deploy) the air bag modules and pre-tensioner seat belts, which may seriously injure you. Read the service warnings and cautions before handling the air bag system components. (See 08–10–3 SERVICE WARNINGS.) (See 08–10–5 SERVICE CAUTIONS.)** • Turn the ignition switch to LOCK position. • Disconnect the negative battery cable and wait for **1 min or more**. • Remove the driver-side air bag module. • Is there cracking or chipping in driver-side air bag module connector?	Yes	Replace the wiring harness.
		No	Go to the next step.

STEP	INSPECTION		ACTION
3	**VERIFY WHETHER MALFUNCTION IS IN DRIVER-SIDE AIR BAG MODULE (INFLATOR NO.2) OR RELATED WIRING HARNESS** • Connect leads of **SST** (Fuel and thermometer checker) or apply 2-ohm resistor to driver-side air bag module (inflator No.1) terminal 3A and 3B, and driver-side air bag module (inflator No.2) terminal 4A and 4B. • Set resistance of **SST** (Fuel and thermometer checker) to 2 ohms. • Connect the negative battery cable. • Turn the ignition switch to ON position. • Check the following PID/DATA monitor, using **SST** (WDS or equivalent). (See 08–02–10 PID/DATA MONITOR TABLE.) — OD_DAB2_ST • Is related wiring harness normal?	Yes	Replace the driver-side air bag module. (See 08–10–6 DRIVER-SIDE AIR BAG MODULE REMOVAL/INSTALLATION.)
		No	Go to the next step.
4	**INSPECT CLOCK SPRING** • Inspect the clock spring. (See 08–10–17 CLOCK SPRING INSPECTION.) • Is clock spring normal?	Yes	Go to the next step.
		No	Replace the clock spring. (See 08–10–15 CLOCK SPRING REMOVAL/INSTALLATION.)
5	**INSPECT WIRING HARNESS BETWEEN CLOCK SPRING AND SAS CONTROL MODULE** • Turn the ignition switch to LOCK position. • Disconnect the negative battery cable and wait for **1 min or more**. • Remove the column cover. • Disconnect the clock spring connector. • Remove the glove compartment. • Disconnect the passenger-side air bag module connector. • Disconnect the driver and passenger-side side air bag module connectors. (Vehicles with side air bag) • Disconnect the driver and passenger-side curtain air bag module connectors. (Vehicles with curtain air bag) • Remove the B-pillar lower trims. (Vehicles with pre-tensioner seat belt) • Disconnect the driver and passenger-side pre-tensioner seat belt connectors. (Vehicles with pre-tensioner seat belt) • Turn up floor covering. • Disconnect the all SAS control module connectors. • Inspect the following wiring harnesses between SAS control module and clock spring terminals for short to ground, short to power supply, and open circuit: — 1G—1B — 1J—1A • Is wiring harness normal?	Yes	**Present malfunction diagnosis:** • Replace the SAS control module. (See 08–10–12 SAS CONTROL MODULE REMOVAL/INSTALLATION.) **Past malfunction diagnosis:** • Troubleshooting completed.
		No	Replace the wiring harnesses.

DTC B2229, B2231, B2233, B2235

E6U080200000W17

DTC	B2229	Passenger-side air bag module (inflator No.2) system circuit short to ground
	B2231	Passenger-side air bag module (inflator No.2) system circuit short to power supply
	B2233	Passenger-side air bag module (inflator No.2) system resistance high
	B2235	Passenger-side air bag module (inflator No.2) system resistance low
DETECTION CONDITION		**Warning** • **Detection conditions are for understanding DTC outline before performing inspection. Performing inspection with only detection conditions may cause injury due to operating error or damage the system. When performing inspection, always follow inspection procedure.** • Abnormal resistance (other than **1.4—2.9 ohms**) detected in passenger-side air bag module circuit • Malfunction in wiring harness between passenger-side air bag module (inflator No.2) and SAS control module
POSSIBLE CAUSE		• Open or short circuit in wiring harness between passenger-side air bag module (inflator No.2) and SAS control module • Passenger-side air bag module (inflator No.2) malfunction • SAS control module malfunction

PASSENGER-SIDE AIR BAG MODULE CONNECTOR

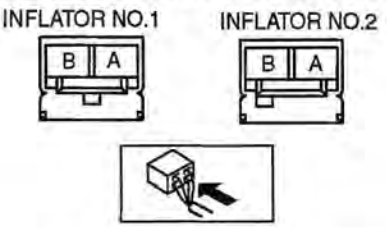

Diagnostic procedure

STEP	INSPECTION		ACTION
1	**INSPECT PASSENGER-SIDE AIR BAG MODULE (INFLATOR NO.2)** • Check the following PID/DATA monitor, using **SST** (WDS or equivalent). (See 08–02–10 PID/DATA MONITOR TABLE.) — P_ABAGR2 • Is resistance of passenger-side air bag module normal? — Resistance: **1.4—2.9 ohms**	Yes	**Present malfunction diagnosis:** • Replace the SAS control module. (See 08–10–12 SAS CONTROL MODULE REMOVAL/INSTALLATION.) **Past malfunction diagnosis:** • Troubleshooting completed.
		No	Go to the next step.
2	**INSPECT PASSENGER-SIDE AIR BAG MODULE (INFLATOR NO.2) CONNECTOR** **Warning** • **Handling the air bag system components improperly can accidentally operate (deploy) the air bag modules and pre-tensioner seat belts, which may seriously injure you. Read the service warnings and cautions before handling the air bag system components. (See 08–10–3 SERVICE WARNINGS.) (See 08–10–5 SERVICE CAUTIONS.)** • Turn the ignition switch to LOCK position. • Disconnect the negative battery cable and wait for **1 min or more**. • Remove the glove compartment. • Disconnect the passenger-side air bag module connector. • Is there cracking or chipping in passenger-side air bag module connector?	Yes	Replace wiring harness.
		No	Go to the next step.
3	**VERIFY WHETHER MALFUNCTION IS IN PASSENGER-SIDE AIR BAG MODULE (INFLATOR NO.2) OR RELATED WIRING HARNESS** • Connect leads of **SST** (Fuel and thermometer checker) or apply 2-ohm resistor to passenger-side air bag module (inflator No.1) terminal A and B, and passenger-side air bag module (inflator No.2) terminal A and B. • Set resistance of **SST** (Fuel and thermometer checker) to 2 ohms. • Connect negative battery cable. • Turn the ignition switch to ON position. • Check the following PID/DATA monitor, using **SST** (WDS or equivalent). (See 08–02–10 PID/DATA MONITOR TABLE.) — OD_PAB2_ST • Is related wiring harness normal?	Yes	Replace the passenger-side air bag module. (See 08–10–7 PASSENGER-SIDE AIR BAG MODULE REMOVAL/INSTALLATION.)
		No	Replace the wiring harness, then go to next step.
4	**INSPECT SAS CONTROL MODULE** • Turn the ignition switch to LOCK position. • Disconnect the negative battery cable and wait for **1 min or more**. • Connect passenger-side air bag module connector. • Are any one or all of the following DTCs displayed? — B2229 — B2231 — B2233 — B2235	Yes	**Present malfunction diagnosis:** • Replace the SAS control module. (See 08–10–12 SAS CONTROL MODULE REMOVAL/INSTALLATION.) **Past malfunction diagnosis:** • Troubleshooting completed.
		No	Troubleshooting completed.

DTC B2290

E6U080200000W18

DTC B2290	Passenger sensing system malfunction
DETECTION CONDITION	**Warning** • **Detection conditions are for understanding the DTC outline before performing an inspectio. Performing an inspection according to only the detection conditions may cause injury due to an operating error, or damage the system. When performing an inspection, always follow the inspection procedure.** • Passenger sensing system circuit malfunction
POSSIBLE CAUSE	• Seat weight sensor calibration not properly set • Communication error between SAS control module and seat weight sensor control module • Seat weight sensor control module internal malfunction • LH or RH seat weight sensor malfunction

SAS CONTROL MODULE CONNECTOR

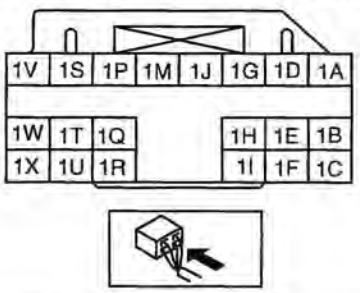

SEAT WEIGHT SENSOR CONTROL MODULE CONNECTOR

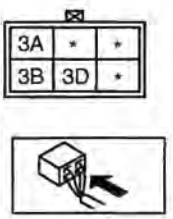

STEP	INSPECTION		ACTION
1	**INSPECT SEAT WEIGHT SENSOR CONTROL MODULE CONNECTOR** **Warning** • **Handling the air bag system components improperly can accidentally operate (deploy) the air bag modules and pre-tensioner seat belts, which may seriously injure you. Read the service warnings and cautions before handling the air bag system components. (See 08–10–3 SERVICE WARNINGS.) (See 08–10–5 SERVICE CAUTIONS.)** Turn the ignition switch to the LOCK position. Disconnect the negative battery cable and wait for **1 min or more**. Disconnect the seat weight sensor control module connector. Is there any malfunction of the seat weight sensor control module connector?	Yes	Repair or replace the wiring harness. After replacement, reperform the DTC inspection and verify that no DTCs are displayed.
		No	Go to the next step.
2	**INSPECTION WIRING HARNESS** Disconnect the SAS control module connector. Verify continuity in the following wiring harnesses: — Between SAS control module terminal 1I and seat weight sensor control module terminal 3D — Between the battery and seat weight sensor control module terminal 3A — Between seat weight sensor control module terminal 3B and body ground Is the continuity normal?	Yes	Go to the next step.
		No	If there is any malfunction in the wiring harnesses, repair or replace the applicable wiring harness. After replacement, reperform the DTC inspection and verify that no DTCs are displayed.
3	**INSPECT PASSENGER SENSING SYSTEM** Connect the seat weight sensor control module connector. Connect the SAS control module. Connect the negative battery cable. Verify the following PIDs using the WDS or equivalent. (See 08–02–10 PID/DATA MONITOR TABLE.) — OCSFLT_MDL — OCSFLT_COM — OCSFLT_L — OCSFLT_R — OCSFLT_SNS — OCSFLT_CAL Do all PIDs display "OK"?	Yes	Go to the next step.
		No	Replace the following parts according to the WDS or equivalent screen: **OCSFLT_MDL or OCSFLT_COM** • If FAULT is displayed: — Seat weight sensor control module (See 08–10–13 SEAT WEIGHT SENSOR CONTROL MODULE REMOVAL/INSTALLATION [EXCEPT L3 WITH TC].) (See 08–10–14 SEAT WEIGHT SENSOR CONTROL MODULE REMOVAL/INSTALLATION [L3 WITH TC].) **OCSFLT_L** • If FAULT is displayed: — Seat weight sensor (LH) (See 09–13–9 FRONT SEAT DISASSEMBLY/ASSEMBLY [EXCEPT L3 WITH TC].) (See 09–13–6 FRONT SEAT DISASSEMBLY/ASSEMBLY [L3 WITH TC].) **OCSFLT_R** • If FAULT is displayed: — Seat weight sensor (RH) (See 09–13–9 FRONT SEAT DISASSEMBLY/ASSEMBLY [EXCEPT L3 WITH TC].) (See 09–13–6 FRONT SEAT DISASSEMBLY/ASSEMBLY [L3 WITH TC].) **OCSFLT_SNS** • If FAULT is displayed: — Seat weight sensor (See 09–13–9 FRONT SEAT DISASSEMBLY/ASSEMBLY [EXCEPT L3 WITH TC].) (See 09–13–6 FRONT SEAT DISASSEMBLY/ASSEMBLY [L3 WITH TC].) **OCSFLT_CAL** • If FAULT is displayed: — Perform seat weight sensor calibration (See 08–10–14 SEAT WEIGHT SENSOR CALIBRATION.)
4	**INSPECT SAS CONTROL MODULE** Reperform the DTC inspection. Is DTC B2290 indicated?	Yes	Replace the SAS control module. (See 08–10–12 SAS CONTROL MODULE REMOVAL/INSTALLATION.)
		No	DTC troubleshooting completed.

DTC B2296

E6U080200000W19

DTC B2296	Crash zone sensor system (communication error, sensor internal circuit abnormal)
DETECTION CONDITION	**Warning** • **Detection conditions are for understanding DTC outline before performing inspection. Performing inspection with only detection conditions may cause injury due to operating error or damage the system. When performing inspection, always follow inspection procedure.** • Malfunction in wiring harness between crash zone sensor and SAS control module • Malfunction in crash zone sensor circuit
POSSIBLE CAUSE	• Open or short circuit in wiring harness between crash zone sensor and SAS control module • SAS control module malfunction • Crash zone sensor malfunction

SAS CONTROL MODULE CONNECTOR

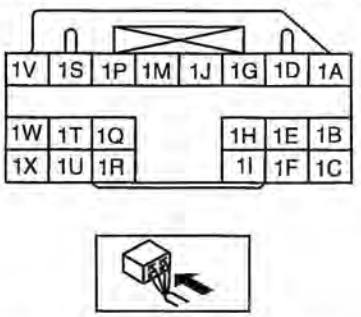

CRASH ZONE SENSOR CONNECTOR

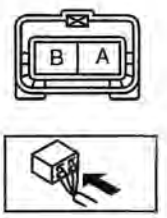

Diagnostic procedure

STEP	INSPECTION		ACTION
1	**INSPECT CRASH ZONE SENSOR CONNECTOR** **Warning** • **Handling the air bag system components improperly can accidentally operate (deploy) the air bag modules and pre-tensioner seat belts, which may seriously injure you. Read the service warnings and cautions before handling the air bag system components. (See 08–10–3 SERVICE WARNINGS.) (See 08–10–5 SERVICE CAUTIONS.)** • Turn the ignition switch to the LOCK position. • Disconnect the negative battery cable and wait tor **1 min or more**. • Disconnect the crash zone sensor connector. • Is there any malfunction of the crash zone sensor connector?	Yes	Replace wiring harnesses.
		No	Go to next step.
2	**INSPECT WIRING HARNESS BETWEEN CRASH ZONE SENSOR AND SAS CONTROL MODULE** • Turn the ignition switch to LOCK position. • Disconnect the negative battery cable and wait for **1 min or more**. • Remove the column cover. • Disconnect the clock spring connector. • Remove the glove compartment. • Disconnect the passenger-side air bag module connector. • Disconnect the driver and passenger-side side air bag module connectors. (Vehicles with side air bag) • Disconnect the driver and passenger-side curtain air bag module connectors. (Vehicles with curtain air bag) • Remove the B-pillar lower trims. (Vehicles with pre-tensioner seat belt) • Disconnect the driver and passenger-side pre-tensioner seat belt connectors. (Vehicles with pre-tensioner seat belt) • Turn up floor covering. • Disconnect the all SAS control module connectors. • Disconnect the crash zone sensor connector. • Connect the negative battery cable. • Inspect the following wiring harnesses between SAS control module and crash zone sensor terminals for short to ground, short to power supply, and open circuit: — 1B—A — 1C—B • Is wiring harness okay?	Yes	Replace the crash zone sensor, then go to next step. (See 08–10–11 CRASH ZONE SENSOR REMOVAL/ INSTALLATION.)
		No	Replace the wiring harnesses.
3	**INSPECT SAS CONTROL MODULE** • Turn the ignition switch to LOCK position. • Disconnect the negative battery cable and wait for **more than 1 minute**. • Connect the all SAS control module connectors. • Connect the crash zone sensor connector. • Is DTC B2296 indicated?	Yes	**Present malfunction diagnosis:** • Replace the SAS control module. (See 08–10–12 SAS CONTROL MODULE REMOVAL/ INSTALLATION.) **Past malfunction diagnosis:** • Troubleshooting completed.
		No	Troubleshooting completed.

DTC B2444, U2017

E6U080200000W22

DTC	B2444	Driver-side side air bag sensor system (sensor internal circuit abnormal)
	U2017	Driver-side side air bag sensor system (communication error)
DETECTION CONDITION		**Warning** • **Detection conditions are for understanding DTC outline before performing inspection. Performing inspection with only detection conditions may cause injury due to operating error or damage the system. When performing inspection, always follow inspection procedure.** • Malfunction in wiring harness between driver-side side air bag sensor and SAS control module • Malfunction in driver-side side air bag sensor circuit
POSSIBLE CAUSE		• Open or short circuit in wiring harness between driver-side side air bag sensor and SAS control module • Driver-side side air bag sensor malfunction • SAS control module malfunction

SAS CONTROL MODULE CONNECTOR

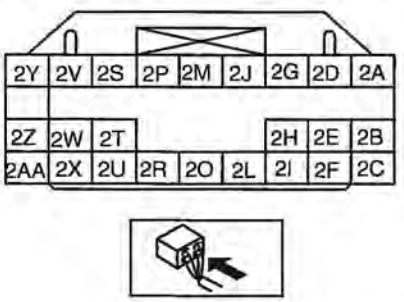

DRIVER-SIDE SIDE AIR BAG SENSOR CONNECTOR



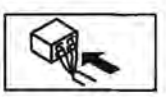

Diagnostic procedure

STEP	INSPECTION		ACTION
1	**INSPECT DRIVER-SIDE SIDE AIR BAG SENSOR** • Check the following PID/DATA monitor, using **SST** (WDS or equivalent). (See 08–02–10 PID/DATA MONITOR TABLE.) — OD_CRST_D1 — OD_CRST_D2 • Is driver-side side air bag sensor normal?	Yes	**Present malfunction diagnosis:** • Replace the SAS control module. (See 08–10–12 SAS CONTROL MODULE REMOVAL/ INSTALLATION.) **Past malfunction diagnosis:** • Troubleshooting completed.
		No	Go to the next step.
2	**INSPECT WIRING HARNESS BETWEEN DRIVER-SIDE SIDE AIR BAG SENSOR AND SAS CONTROL MODULE** **Warning** • **Handling air bag system components improperly can accidentally deploy air bag modules and pre-tensioner seat belts, which may seriously injure you. Read AIR BAG SYSTEM SERVICE WARNINGS before handling air bag system components. (See 08–10–3 SERVICE WARNINGS.) (See 08–10–5 SERVICE CAUTIONS.)** • Turn the ignition switch to LOCK position. • Disconnect the negative battery cable and wait for **1 min or more**. • Remove the column cover. • Disconnect the clock spring connector. • Remove the glove compartment. • Disconnect the passenger-side air bag module connector. • Disconnect the driver and passenger-side side air bag module connectors. (Vehicles with side air bag) • Disconnect the driver and passenger-side curtain air bag module connectors. (Vehicles with curtain air bag) • Remove the B-pillar lower trims. (Vehicles with pre-tensioner seat belt) • Disconnect the driver and passenger-side pre-tensioner seat belt connectors. (Vehicles with pre-tensioner seat belt) • Turn up floor covering. • Disconnect the all SAS control module connectors. • Disconnect the driver-side side air bag sensor connector. • Connect the negative battery cable. • Inspect the following wiring harnesses between SAS control module and driver-side side air bag sensor terminals for short to ground, short to power supply, and open circuit: — 2Z—A — 2AA—B • Is wiring harness normal?	Yes	Replace the driver-side side air bag sensor, then go to next step. (See 08–10–12 SIDE AIR BAG SENSOR REMOVAL/ INSTALLATION.)
		No	Replace the wiring harnesses.
3	**INSPECT SAS CONTROL MODULE** • Turn the ignition switch to LOCK position. • Disconnect the negative battery cable and wait for **more than 1 minute**. • Connect the all SAS control module connectors. • Connect the driver-side side air bag sensor connector. • Are DTCs B2444 or U2017 or both indicated?	Yes	**Present malfunction diagnosis:** • Replace the SAS control module. (See 08–10–12 SAS CONTROL MODULE REMOVAL/ INSTALLATION.) **Past malfunction diagnosis:** • Troubleshooting completed.
		No	Troubleshooting completed.

DTC B2445, U2018

E6U080200000W23

DTC		
	B2445	Passenger-side side air bag sensor system (sensor internal circuit abnormal)
	U2018	Passenger-side side air bag sensor system (communication error)
DETECTION CONDITION		**Warning** • **Detection conditions are for understanding DTC outline before performing inspection. Performing inspection with only detection conditions may cause injury due to operating error or damage the system. When performing inspection, always follow inspection procedure.** • Malfunction in wiring harness between passenger-side side air bag sensor and SAS control module • Malfunction in passenger-side side air bag sensor circuit
POSSIBLE CAUSE		• Open or short circuit in wiring harness between passenger-side side air bag sensor and SAS control module • Passenger-side side air bag sensor malfunction • SAS control module malfunction

SAS CONTROL MODULE CONNECTOR

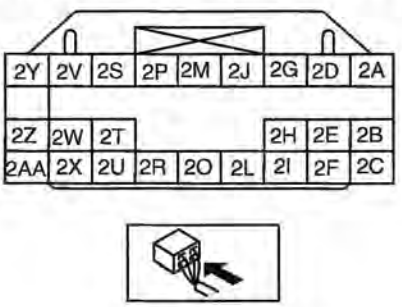

PASSENGER-SIDE SIDE AIR BAG SENSOR CONNECTOR

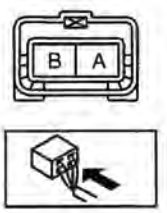

Diagnostic procedure

STEP	INSPECTION		ACTION
1	**INSPECT PASSENGER-SIDE SIDE AIR BAG SENSOR** • Check the following PID/DATA monitor, using **SST** (WDS or equivalent). (See 08–02–10 PID/DATA MONITOR TABLE.) — OD_CRST_P1 — OD_CRST_P2 • Is passenger-side side air bag sensor normal?	Yes	**Present malfunction diagnosis:** • Replace the SAS control module. (See 08–10–12 SAS CONTROL MODULE REMOVAL/INSTALLATION.) **Past malfunction diagnosis:** • Troubleshooting completed.
		No	Go to the next step.

STEP	INSPECTION		ACTION
2	**INSPECT WIRING HARNESS BETWEEN PASSENGER-SIDE AIR BAG SENSOR AND SAS CONTROL MODULE** **Warning** • **Handling air bag system components improperly can accidentally deploy air bag modules and pre-tensioner seat belts, which may seriously injure you. Read AIR BAG SYSTEM SERVICE WARNINGS before handling air bag system components. (See 08–10–3 SERVICE WARNINGS.) (See 08–10–5 SERVICE CAUTIONS.)** • Turn the ignition switch to LOCK position. • Disconnect the negative battery cable and wait for **1 min or more**. • Remove the column cover. • Disconnect the clock spring connector. • Remove the glove compartment. • Disconnect the passenger-side air bag module connector. • Disconnect the driver and passenger-side side air bag module connectors. (Vehicles with side air bag) • Disconnect the driver and passenger-side curtain air bag module connectors. (Vehicles with curtain air bag) • Remove the B-pillar lower trims. (Vehicles with pre-tensioner seat belt) • Disconnect the driver and passenger-side pre-tensioner seat belt connectors. (Vehicles with pre-tensioner seat belt) • Turn up floor covering. • Disconnect the all SAS control module connectors. • Disconnect the passenger-side side air bag sensor connector. • Connect the negative battery cable. • Inspect the following wiring harnesses between SAS control module and passenger-side side air bag sensor terminals for short to ground, short to power supply, and open circuit: — 2B—A — 2C—B • Is wiring harness normal?	Yes	Replace the passenger-side side air bag sensor, then go to next step. (See 08–10–12 SIDE AIR BAG SENSOR REMOVAL/ INSTALLATION.)
		No	Replace the wiring harnesses.
3	**INSPECT SAS CONTROL MODULE** • Turn the ignition switch to LOCK position. • Disconnect the negative battery cable and wait for **1 min or more.** • Connect the all SAS control module connectors. • Connect the passenger-side side air bag sensor connector. • Are DTCs B2445 or U2018 or both indicated?	Yes	**Present malfunction diagnosis:** • Replace the SAS control module. (See 08–10–12 SAS CONTROL MODULE REMOVAL/ INSTALLATION.) **Past malfunction diagnosis:** • Troubleshooting completed.
		No	Troubleshooting completed.

DTC B2477

E6U080200000W30

DTC B2477	Configuration error
DETECTION CONDITION	**Warning** • **Detection conditions are for understanding the DTC outline before performing an inspectio Performing an inspection according to only the detection conditions may cause injury due to an operating error, or damage the system. When performing an inspection, always follow the inspection procedure.** • SAS control module configuration has not been performed correctly.
POSSIBLE CAUSE	• SAS control module configuration error • SAS control module malfunction

Diagnostic procedure

STEP	INSPECTION		ACTION
1	**INSPECT SAS CONTROL MODULE** • Using the WDS or equivalent, perform SAS control module configuration. • Is DTC B2477 indicated?	Yes	Replace the SAS control module. (See 08–10–12 SAS CONTROL MODULE REMOVAL/ INSTALLATION.)
		No	DTC troubleshooting completed.

DTC B2773, B2774, B2775, B2776

E6U080200000W24

DTC		
DTC	B2773	**Driver-side curtain air bag module system resistance low**
	B2774	**Driver-side curtain air bag module system resistance high**
	B2775	**Driver-side curtain air bag module system circuit short to ground**
	B2776	**Driver-side curtain air bag module system circuit short to power supply**
DETECTION CONDITION		**Warning** • **Detection conditions are for understanding DTC outline before performing inspection. Performing inspection with only detection conditions may cause injury due to operating error or damage the system. When performing inspection, always follow inspection procedure.** • Abnormal resistance (other than **1.4—3.2 ohms**) detected in driver-side curtain air bag module circui • Malfunction in wiring harness between driver-side curtain air bag module and SAS control module
POSSIBLE CAUSE		• Open or short circuit in wiring harness between driver-side curtain air bag module and SAS control module • Driver-side curtain air bag module malfunction • SAS control module malfunction

DRIVER-SIDE CURTAIN AIR BAG MODULE CONNECTOR

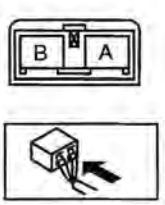

Diagnostic procedure

STEP	INSPECTION		ACTION
1	**INSPECT DRIVER-SIDE CURTAIN AIR BAG MODULE** • Check the following PID/DATA monitor, using **SST** (WDS or equivalent). (See 08–02–10 PID/DATA MONITOR TABLE.) — DR_CURTN • Is resistance of driver-side curtain air bag module normal? — Resistance: **1.4—3.2 ohms**	Yes	**Present malfunction diagnosis:** • Replace the SAS control module. (See 08–10–12 SAS CONTROL MODULE REMOVAL/ INSTALLATION.) **Past malfunction diagnosis:** • Troubleshooting completed.
		No	Go to the next step.
2	**INSPECT DRIVER-SIDE CURTAIN AIR BAG MODULE CONNECTOR** **Warning** • **Handling the air bag system components improperly can accidentally operate (deploy) the air bag modules and pre-tensioner seat belts, which may seriously injure you. Read the service warnings and cautions before handling the air bag system components. (See 08–10–3 SERVICE WARNINGS.) (See 08–10–5 SERVICE CAUTIONS.)** • Turn the ignition switch to LOCK position. • Disconnect the negative battery cable and wait for **1 min or more**. • Disconnect the driver-side curtain air bag module connector. • Is there cracking or chipping in driver-side curtain air bag module connector?	Yes	Replace the wiring harness.
		No	Go to the next step.
3	**VERIFY WHETHER MALFUNCTION IS IN DRIVER-SIDE CURTAIN AIR BAG MODULE OR RELATED WIRING HARNESS** • Connect leads of **SST** (Fuel and thermometer checker) or apply 2-ohm resistor to driver-side curtain air bag module terminal A and B. • Set resistance of **SST** (Fuel and thermometer checker) to 2 ohms. • Connect the negative battery cable. • Turn the ignition switch to ON position. • Are any one or all of the following DTCs displayed? — B2773 — B2774 — B2775 — B2776	Yes	Replace the wiring harness, then go to next step.
		No	Replace the driver-side curtain air bag module. (See 08–10–10 CURTAIN AIR BAG MODULE REMOVAL/ INSTALLATION.)
4	**INSPECT SAS CONTROL MODULE** • Turn the ignition switch to LOCK position. • Disconnect the negative battery cable and wait for **1 min or more**. • Connect driver-side curtain air bag module connector. • Are any one or all of the following DTCs displayed? — B2773 — B2774 — B2775 — B2776	Yes	**Present malfunction diagnosis:** • Replace the SAS control module. (See 08–10–12 SAS CONTROL MODULE REMOVAL/ INSTALLATION.) **Past malfunction diagnosis:** • Troubleshooting completed.
		No	Troubleshooting completed.

DTC B2777, B2778, B2779, B2780

E6U080200000W25

DTC	B2777	Passenger-side curtain air bag module system resistance low
	B2778	Passenger-side curtain air bag module system resistance high
	B2779	Passenger-side curtain air bag module system circuit short to ground
	B2780	Passenger-side curtain air bag module system circuit short to power supply
DETECTION CONDITION		**Warning** • **Detection conditions are for understanding DTC outline before performing inspection. Performing inspection with only detection conditions may cause injury due to operating error or damage the system. When performing inspection, always follow inspection procedure.** • Abnormal resistance (other than **1.4—3.2 ohms**) detected in passenger-side curtain air bag module circuit • Malfunction in wiring harness between passenger-side curtain air bag module and SAS control module
POSSIBLE CAUSE		• Open or short circuit in wiring harness between passenger-side curtain air bag module and SAS control module • Passenger-side curtain air bag module malfunction • SAS control module malfunction

PASSENGER-SIDE CURTAIN AIR BAG MODULE CONNECTOR

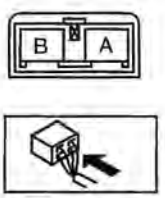

Diagnostic procedure

STEP	INSPECTION		ACTION
1	**INSPECT PASSENGER-SIDE CURTAIN AIR BAG MODULE** • Check the following PID/DATA monitor, using **SST** (WDS or equivalent). (See 08–02–10 PID/DATA MONITOR TABLE.) — PS_CURTN • Is resistance of passenger-side curtain air bag module normal? — Resistance: **1.4—3.2 ohms**	Yes	**Present malfunction diagnosis:** • Replace the SAS control module. (See 08–10–12 SAS CONTROL MODULE REMOVAL/ INSTALLATION.) **Past malfunction diagnosis:** • Troubleshooting completed.
		No	Go to the next step.
2	**INSPECT PASSENGER-SIDE CURTAIN AIR BAG MODULE CONNECTOR** **Warning** • **Handling the air bag system components improperly can accidentally operate (deploy) the air bag modules and pre-tensioner seat belts, which may seriously injure you. Read the service warnings and cautions before handling the air bag system components. (See 08–10–3 SERVICE WARNINGS.) (See 08–10–5 SERVICE CAUTIONS.)** • Turn the ignition switch to LOCK position. • Disconnect the negative battery cable and wait for **1 min or more**. • Disconnect the passenger-side curtain air bag module connector. • Is there cracking or chipping in passenger-side curtain air bag module connector?	Yes	Replace the wiring harness.
		No	Go to the next step.
3	**VERIFY WHETHER MALFUNCTION IS IN PASSENGER-SIDE CURTAIN AIR BAG MODULE OR RELATED WIRING HARNESS** • Connect leads of **SST** (Fuel and thermometer checker) or apply 2-ohm resistor to passenger-side curtain air bag module terminal A and B. • Set resistance of **SST** (Fuel and thermometer checker) to 2 ohms. • Connect the negative battery cable. • Turn the ignition switch to ON position. • Are any one or all of the following DTCs displayed? — B2777 — B2778 — B2779 — B2780	Yes	Replace the wiring harness, then go to next step.
		No	Replace the passenger-side curtain air bag module. (See 08–10–10 CURTAIN AIR BAG MODULE REMOVAL/ INSTALLATION.)
4	**INSPECT SAS CONTROL MODULE** • Turn the ignition switch to LOCK position. • Disconnect the negative battery cable and wait for **1 min or more**. • Connect the passenger-side curtain air bag module connector. • Are any one or all of the following DTCs displayed? — B2777 — B2778 — B2779 — B2780	Yes	**Present malfunction diagnosis:** • Replace the SAS control module. (See 08–10–12 SAS CONTROL MODULE REMOVAL/ INSTALLATION.) **Past malfunction diagnosis:** • Troubleshooting completed.
		No	Troubleshooting completed.

DTC B2867

E6U080200000W26

DTC B2867	SAS control module connector poor connection
DETECTION CONDITION	**Warning** • **Detection conditions are for understanding DTC outline before performing inspection. Performing inspection with only detection conditions may cause injury due to operating error or damage the system. When performing inspection, always follow inspection procedure.** • There is no continuity between poor connection detector bar terminals of SAS control module.
POSSIBLE CAUSE	• Poor connection of any SAS control module connectors • Malfunction of any SAS control module connectors • SAS control module malfunction

SAS CONTROL MODULE CONNECTOR

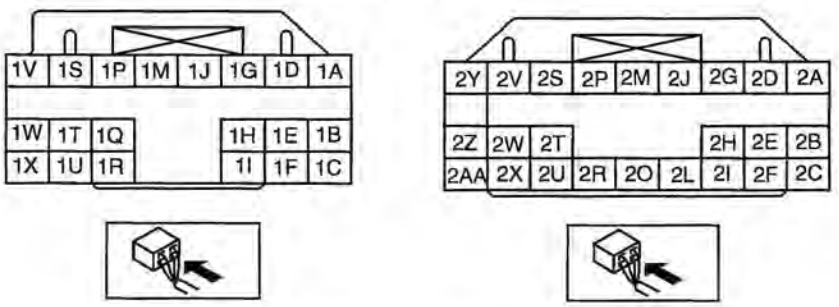

Diagnostic procedure

STEP	INSPECTION		ACTION
1	**VERIFY THAT ALL SAS CONTROL MODULE CONNECTORS ARE CONNECTED WITH SAS CONTROL MODULE** **Warning** • **Handling the air bag system components improperly can accidentally operate (deploy) the air bag modules and pre-tensioner seat belts, which may seriously injure you. Read the service warnings and cautions before handling the air bag system components. (See 08–10–3 SERVICE WARNINGS.) (See 08–10–5 SERVICE CAUTIONS.)** • Turn the ignition switch to LOCK position. • Disconnect the negative battery cable and wait for **1 min or more**. • Turn up floor covering. • Are all SAS control module connectors securely connected?	Yes	Go to next step.
		No	Reconnect connector properly.
2	**INSPECT ALL SAS CONTROL MODULE CONNECTORS** • Remove the column cover. • Disconnect the clock spring connector. • Remove the glove compartment. • Disconnect the passenger-side air bag module connector. • Disconnect the driver and passenger-side side air bag module connectors. (Vehicles with side air bag) • Disconnect the driver and passenger-side curtain air bag module connectors. (Vehicles with curtain air bag) • Remove the B-pillar lower trims. (Vehicles with pre-tensioner seat belt) • Disconnect the driver and passenger-side pre-tensioner seat belt connectors. (Vehicles with pre-tensioner seat belt) • Disconnect the all SAS control module connectors. • Are poor connection detector bars of all SAS control module connectors normal?	Yes	**Present malfunction diagnosis:** • Replace the SAS control module. (See 08–10–12 SAS CONTROL MODULE REMOVAL/ INSTALLATION.) **Past malfunction diagnosis:** • Troubleshooting completed.
		No	Replace wiring harnesses.

DTC C1947, C1948, C1981

E6U080200000W27

DTC	C1947	Seat track position sensor circuit short to ground
	C1948	Seat track position sensor circuit resistance out of range
	C1981	Seat track position sensor circuit open or short to power supply
DETECTION CONDITION		**Warning** • **Detection conditions are for understanding DTC outline before performing inspection. Performing inspection with only detection conditions may cause injury due to operating error or damage the system. When performing inspection, always follow inspection procedure.** • Malfunction in seat track position sensor circuit.
POSSIBLE CAUSE		• Malfunction of connector between seat track position sensor and SAS control module. • Open or short circuit in wiring harness between seat track position sensor and SAS control module. • Seat track position sensor malfunction • SAS control module malfunction

SAS CONTROL MODULE CONNECTOR

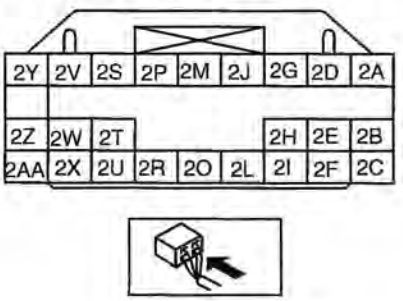

SEAT TRACK POSITION SENSOR CONNECTOR

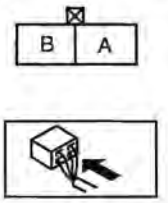

Diagnostic procedure

STEP	INSPECTION		ACTION
1	**INSPECT SEAT TRACK POSITION SENSOR CIRCUIT** • Check the following PID/DATA monitor, using **SST** (WDS or equivalent). (See 08–02–10 PID/DATA MONITOR TABLE.) — TRAK_SW • Is seat track position sensor circuit normal?	Yes	**Present malfunction diagnosis:** • Replace the SAS control module. (See 08–10–12 SAS CONTROL MODULE REMOVAL/ INSTALLATION.) **Past malfunction diagnosis:** • Troubleshooting completed.
		No	Go to the next step.

STEP	INSPECTION		ACTION
2	**INSPECT WIRING HARNESS BETWEEN SEAT TRACK POSITION SENSOR AND SAS CONTROL MODULE** **Warning** • **Handling the air bag system components improperly can accidentally operate (deploy) the air bag modules and pre-tensioner seat belts, which may seriously injure you. Read the service warnings and cautions before handling the air bag system components. (See 08–10–3 SERVICE WARNINGS.) (See 08–10–5 SERVICE CAUTIONS.)** • Turn the ignition switch to LOCK position. • Disconnect the negative battery cable and wait for **1 min or more**. • Remove the column cover. • Disconnect the clock spring connector. • Remove the glove compartment. • Disconnect the passenger-side air bag module connector. • Disconnect the driver and passenger-side curtain air bag module connectors. (Vehicles with curtain air bag) • Disconnect the driver and passenger-side side air bag module connectors. (Vehicles with side air bag) • Remove the B-pillar lower trims. (Vehicles with pre-tensioner seat belt) • Disconnect the driver and passenger-side pre-tensioner seat belt connectors. (Vehicles with pre-tensioner seat belt) • Turn up floor covering. • Disconnect the seat track position sensor connector • Inspect the following wiring harness between SAS control module and seat track position sensor terminals for short to ground, short to power supply, and open circuit: — 2W—A — 2X—B • Is wiring harness normal?	Yes	Replace the seat track position sensor, then go to the next step.
		No	Replace the wiring harness, then go to the next step.
3	**INSPECT SAS CONTROL MODULE** • Connect the SAS control module connector. • Connect the clock spring connector. • Connect the passenger-side air bag module connector. • Connect the driver-and passenger-side curtain air bag module connectors. • Connect the driver-and passenger-side side air bag module connectors. • Connect the driver-and passenger-side pre tensioner seat belt connectors. • Connect the seat track position sensor connector. • Are any one or all of the following DTCs displayed? — C1947 — C1948 — C1981	Yes	**Present malfunction diagnosis:** • Replace the SAS control module. (See 08–10–12 SAS CONTROL MODULE REMOVAL/ INSTALLATION.) **Past malfunction diagnosis:** • Troubleshooting completed.
		No	Troubleshooting completed.

08–03 SYMPTOM TROUBLESHOOTING

AIR BAG SYSTEM 08–03–1
Troubleshooting Index 08–03–1
NO.1 AIR BAG SYSTEM WARNING LIGHT DOES NOT ILLUMINATE 08–03–2
Diagnostic Procedure 08–03–2
NO.2 AIR BAG SYSTEM WARNING LIGHT IS ILLUMINATED ALL THE TIME 08–03–4
Diagnostic Procedure 08–03–4

AIR BAG SYSTEM

E6U080300000W01

Troubleshooting Index

- Use the chart below verify the symptoms of the trouble in order to diagnose the appropriate area.

No.	Troubleshooting item	Description	Page
1	Air bag system warning light does not illuminate.	Malfunction in air bag system warning circuit (short to ground).	(See 08–03–2 NO.1 AIR BAG SYSTEM WARNING LIGHT DOES NOT ILLUMINATE)
2	Air bag system warning light is illuminated all the time.	Malfunction in air bag system warning circuit (open circuit or short to power supply).	(See 08–03–4 NO.2 AIR BAG SYSTEM WARNING LIGHT IS ILLUMINATED ALL THE TIME)

NO.1 AIR BAG SYSTEM WARNING LIGHT DOES NOT ILLUMINATE

E6U080300000W02

1	**Air bag system warning light does not illuminate.**
DETECTION CONDITION	Malfunction in air bag system warning light circuit (short to ground)
POSSIBLE CAUSE	• SAS control module malfunction • Instrument cluster (print plate) malfunction • Short to ground circuit in wiring harness between instrument cluster and SAS control module

Diagnostic Procedure

- When performing an asterisked (*) troubleshooting inspection, shake the wiring harness and connectors while doing the inspection to discover whether poor contact points are the cause of any intermittent malfunction. If there is a problem, check to make sure connectors, terminals and wiring harness are connected correctly and undamaged.

STEP	INSPECTION		ACTION
1	**INSPECT OTHER WARNING AND INDICATOR LIGHTS CIRCUIT IN INSTRUMENT CLUSTER** • Turn the ignition switch to ON position. • Do other warning and indicator lights illuminate?	Yes	Turn the ignition switch to LOCK position, then go to the next step.
		No	Inspect the instrument cluster power supply system and ground system, then go to Step 5.
2	**INSPECT SAS CONTROL MODULE** **Warning** • **Handling the air bag system components improperly can accidentally operate (deploy) the air bag modules and pre-tensioner seat belts, which may seriously injure you. Read the service warnings and cautions before handling the air bag system components. (See 08–10–3 SERVICE WARNINGS.) (See 08–10–5 SERVICE CAUTIONS.)** • Turn the ignition switch to LOCK position. • Disconnect the negative battery cable and wait for **1 min or more**. • Remove the column cover. • Disconnect the clock spring connector. • Remove the glove compartment. • Disconnect the passenger-side air bag module connector. • Disconnect the driver and passenger-side side air bag module connectors. (Vehicles with side air bag) • Disconnect the driver and passenger-side curtain air bag module connectors. (Vehicles with curtain air bag) • Remove the B-pillar lower trims. (Vehicles with pre-tensioner seat belt) • Disconnect the driver- and passenger-side pre-tensioner seat belt connectors. (Vehicles with pre-tensioner seat belt) • Turn up floor covering. • Disconnect the all SAS control module connectors. • Connect the negative battery cable. • Turn the ignition switch to ON position. • Does air bag system warning light illuminate?	Yes	Replace the SAS control module, then go to Step 5. (See 08–10–12 SAS CONTROL MODULE REMOVAL/ INSTALLATION.)
		No	Go to the next step.
*3	**INSPECT WIRING HARNESS BETWEEN SAS CONTROL MODULE AND INSTRUMENT CLUSTER FOR SHORT TO GROUND** • Turn the ignition switch to LOCK position. • Disconnect the negative battery cable. • Disconnect the instrument cluster connector. • Is there continuity between instrument cluster terminal 10 and ground?	Yes	Replace the wiring harness, then go to Step 5.
		No	Go to the next step.

STEP	INSPECTION		ACTION
4	**INSPECT INSTRUMENT CLUSTER** • Connect the instrument cluster connector. • Connect the negative battery cable. • Does air bag system warning light illuminate with ignition switch ON?	Yes	Go to the next step.
		No	Replace the instrument cluster, then go to the next step. (See 09–22–3 INSTRUMENT CLUSTER REMOVAL/ INSTALLATION.)
5	**CONFIRM THAT MALFUNCTION SYMPTOMS DO NOT RECUR AFTER REPAIR** • Turn the ignition switch to LOCK position. • Disconnect the negative battery cable and wait for **1 min or more.** • Connect the all SAS control module connectors. • Connect the driver and passenger-side pre-tensioner seat belt connectors. (Vehicles with pre-tensioner seat belt) • Connect the driver and passenger-side curtain air bag module connectors. (Vehicles with curtain air bag) • Connect the driver and passenger-side side air bag module connectors. (Vehicles with side air bag) • Connect the passenger-side air bag module connector. • Connect the clock spring connector. • Connect the negative battery cable. • Turn the ignition switch to ON position. • Does air bag system warning light operate properly?	Yes	Complete troubleshooting, then explain repairs to customer.
		No	Recheck malfunction symptoms, then repeat from Step 1 if malfunction recurs.

NO.2 AIR BAG SYSTEM WARNING LIGHT IS ILLUMINATED ALL THE TIME

E6U080300000W03

2	**Air bag system warning light is illuminated all the time.**
DETECTION CONDITION	Malfunction in air bag system warning light circuit (open circuit or short to power supply).
POSSIBLE CAUSE	• Weak battery • SAS control module malfunction • Instrument cluster (print plate) malfunction • No connection in SAS control module connector • Poor contact in instrument cluster connector (16-pin) • Open or short to power supply circuit in wiring harness between instrument cluster and SAS control module • Poor contact at terminals 1T, 1X and/or 1W of SAS control module connector • Poor contact in wiring harness between terminal 1X of SAS control module connector and ground • Poor contact in wiring harness between AIR BAG 15 A fuse and terminal 1W of SAS control module

Diagnostic Procedure

- When performing an asterisked (*) troubleshooting inspection, shake the wiring harness and connectors while doing the inspection to discover whether poor contact points are the cause of any intermittent malfunction. If there is a problem, check to make sure connectors, terminals and wiring harness are connected correctly and undamaged.

STEP	INSPECTION		ACTION
1	**INSPECT BATTERY** • Measure voltage of battery. • Is voltage **9 V or more**?	Yes	Go to the next step.
		No	Battery is weak. Inspect charge/discharge system, then go to Step 10. (See 01–17A–2 BATTERY INSPECTION [L3, AJ].) (See 01–17B–2 BATTERY INSPECTION [L3 WITH TC].)
2	**VERIFY THAT SAS CONTROL MODULE CONNECTOR IS CONNECTED** **Warning** • **Handling the air bag system components improperly can accidentally operate (deploy) the air bag modules and pre-tensioner seat belts, which may seriously injure you. Read the service warnings and cautions before handling the air bag system components. (See 08–10–3 SERVICE WARNINGS.) (See 08–10–5 SERVICE CAUTIONS.)** • Turn the ignition switch to LOCK position. • Disconnect the negative battery cable and wait for **1 min or more**. • Turn up floor covering. • Are all SAS control module connectors securely connected?	Yes	Go to the next step.
		No	Reconnect connector properly, then go to Step 10.

STEP	INSPECTION		ACTION
* 3	**INSPECT WIRING HARNESS BETWEEN SAS CONTROL MODULE AND INSTRUMENT CLUSTER FOR CONTINUITY** • Remove the column cover. • Disconnect the clock spring connector. • Remove the glove compartment. • Disconnect the passenger-side air bag module connector. • Disconnect the driver and passenger-side side air bag module connectors. (Vehicles with side air bag) • Disconnect the driver and passenger-side curtain air bag module connectors. (Vehicles with curtain air bag) • Remove the B-pillar lower trims. (Vehicles with pre-tensioner seat belt) • Disconnect the driver- and passenger-side pre-tensioner seat belt connectors. (Vehicles with pre-tensioner seat belt) • Turn up floor covering. • Disconnect the all SAS control module connectors. • Disconnect the instrument cluster connector. • Is there continuity between SAS control module terminal 1T and instrument cluster terminal 1O?	Yes	Go to the next step.
		No	Replace the wiring harness, then go to Step 10.
* 4	**INSPECT WIRING HARNESS BETWEEN SAS CONTROL MODULE AND INSTRUMENT CLUSTER FOR SHORT TO POWER SUPPLY** • Connect the negative battery cable. • Turn the ignition switch to ON position. • Measure voltage at instrument cluster terminal 1O. • Is voltage **9 V or more**?	Yes	Replace the wiring harness, then go to Step 10.
		No	Go to the next step.
5	**CHECK TO SEE WHETHER MALFUNCTION IS IN AIR BAG SYSTEM WARNING LIGHT IN INSTRUMENT CLUSTER** • Connect the instrument cluster terminal 1O to ground, then reconnect connector. • Does air bag system warning light illuminate with ignition switch ON?	Yes	Replace the instrument cluster, then go to Step 10. (See 09–22–3 INSTRUMENT CLUSTER REMOVAL/ INSTALLATION.)
		No	Go to the next step.
6	**INSPECT POWER SUPPLY CIRCUIT OF SAS CONTROL MODULE (TERMINAL 1W)** • Turn the ignition switch to LOCK position. • Disconnect the negative battery cable and wait for **1 min or more**. • Connect the all SAS control module connectors. • Connect the driver and passenger-side pre-tensioner seat belt connectors. (Vehicles with pre-tensioner seat belt) • Connect the driver and passenger-side curtain air bag module connectors. (Vehicles with curtain air bag) • Connect the driver and passenger-side side air bag module connectors. (Vehicles with side air bag) • Connect the passenger-side air bag module connector. • Connect the clock spring connector. • Inspect voltage for PID/DATA monitor IGN_VOLT item using **SST** (WDS or equivalent). • Is voltage of at least one terminal **9 V or more**?	Yes	Go to Step 9.
		No	Go to the next step.

STEP	INSPECTION		ACTION
7	**INSPECT WIRING HARNESS BETWEEN BATTERY AND FUSE BLOCK** • Remove the driver-side front side trim. • Remove the fuse block without disconnecting connectors. • Turn the ignition switch to ON position. • Measure voltage at terminals D (JB–01) of fuse block connector. • Is voltage of at least one terminal **more than 9 V**?	Yes	Go to the next step.
		No	Repair the wiring harnesses, then go to Step 9.
8	**INSPECT WIRING HARNESS BETWEEN FUSE BLOCK AND SAS CONTROL MODULE** • Measure voltage at terminals I (JB–03) of fuse block connector. • Is voltage of at least one terminal **9 V or more**?	Yes	Repair the wiring harnesses, then go to Step 10.
		No	Inspect the fuse block, then go to Step 10.
9	**VERIFY THAT SAS CONTROL MODULE CONNECTOR TERMINAL 1X IS GROUND** • Turn the gnition switch to LOCK position. • Disconnect the negative battery cable and wait for **1 min or more**. • Remove the column cover. • Disconnect the clock spring connector. • Remove the glove compartment. • Disconnect the passenger-side air bag module connector. • Disconnect the driver and passenger-side side air bag module connectors. (Vehicles with side air bag) • Disconnect the driver and passenger-side curtain air bag module connectors. (Vehicles with curtain air bag) • Remove the B-pillar lower trims. (Vehicles with pre-tensioner seat belt) • Disconnect the driver and passenger-side pre-tensioner seat belt connectors. (Vehicles with pre-tensioner seat belt) • Turn up floor covering. • Disconnect the all SAS control module control model connectors. • Inspect wiring harness between SAS control module connector terminal 1X and ground for the following: — Short to power supply — Open circuit • Is wiring harness normal?	Yes	Replace the SAS control module, then go to the next step. (See 08–10–12 SAS CONTROL MODULE REMOVAL/ INSTALLATION.)
		No	Replace the wiring harnesses, then go to the next step.
10	**CONFIRM THAT MALFUNCTION SYMPTOMS DO NOT RECUR AFTER REPAIR** • Turn the ignition switch to LOCK position. • Disconnect the negative battery cable and wait for **1 min or more**. • Connect the all SAS control module connectors. • Connect the driver and passenger-side pre-tensioner seat belt connectors. (Vehicles with pre-tensioner seat belt) • Connect the driver and passenger-side curtain air bag module connectors. (Vehicles with curtain air bag) • Connect the driver and passenger-side side air bag module connectors. (Vehicles with side air bag) • Connect the passenger-side air bag module connector. • Connect the clock spring connector. • Connect the instrument cluster connector. • Connect the negative battery cable. • Turn the ignition switch to ON position. • Does air bag system warning light operate properly?	Yes	Complete troubleshooting, thethen explain repairs to customer.
		No	Recheck malfunction symptoms, then repeat from Step 1 if malfunction recurs.

08–10 AIR BAG SYSTEM

AIR BAG SYSTEM
LOCATION INDEX..... 08–10–2
SERVICE WARNINGS..... 08–10–3
Air Bag Module Inspection..... 08–10–3
Air Bag Module Handling..... 08–10–3
Side Air Bag Module Handling..... 08–10–3
Seat Weight Sensor Handling 08–10–3
SAS Control Module Handling..... 08–10–4
Crash Zone Sensor Handling..... 08–10–4
Side Air Bag Sensor Handling 08–10–4
Pre-tensioner Seat Belt Inspection ... 08–10–5
SERVICE CAUTIONS 08–10–5
Air Bag System Component Disassembly..... 08–10–5
Air Bag Module, Pre-tensioner Seat Belt Handling 08–10–5
Seat Weight Sensor Handling 08–10–5
Air Bag Module, Pre-tensioner Seat Belt Reuse..... 08–10–5
Air Bag Wiring Harness Repair 08–10–6
DRIVER-SIDE AIR BAG MODULE REMOVAL/INSTALLATION..... 08–10–6
Connector Removal Note..... 08–10–6
PASSENGER-SIDE AIR BAG MODULE REMOVAL/INSTALLATION..... 08–10–7
Connector Removal Note..... 08–10–7
SIDE AIR BAG MODULE REMOVAL/INSTALLATION..... 08–10–8
Connector Removal Note..... 08–10–8
PE AIR BAG MODULE REMOVAL/INSTALLATION [L3 WITH TC]08–10–9
CURTAIN AIR BAG MODULE REMOVAL/INSTALLATION..... 08–10–10
Connector Removal Note (5-Door, Sport Wagon)..... 08–10–11
CRASH ZONE SENSOR REMOVAL/INSTALLATION..... 08–10–11
SIDE AIR BAG SENSOR REMOVAL/INSTALLATION..... 08–10–12
SAS CONTROL MODULE REMOVAL/INSTALLATION 08–10–12
SEAT TRACK POSITION SENSOR REMOVAL/INSTALLATION [EXCEPT L3 WITH TC] 08–10–13
SEAT WEIGHT SENSOR CONTROL MODULE REMOVAL/INSTALLATION [EXCEPT L3 WITH TC] 08–10–13
Removal 08–10–13
Installation.....08–10–13
SEAT WEIGHT SENSOR CONTROL MODULE REMOVAL/INSTALLATION [L3 WITH TC] 08–10–14
SEAT WEIGHT SENSOR CALIBRATION 08–10–14
SEAT WEIGHT SENSOR INSPECTION 08–10–15
PASSENGER AIR BAG DEACTIVATION (PAD) INDICATOR REMOVAL/INSTALLATION 08–10–15
CLOCK SPRING REMOVAL/INSTALLATION 08–10–15
Clock Spring Installation Note.....08–10–16
CLOCK SPRING ADJUSTMENT.....08–10–16
CLOCK SPRING INSPECTION 08–10–17
AIR BAG MODULE AND PRE-TENSIONER SEAT BELT DEPLOYMENT PROCEDURES.....08–10–18
Deployment Procedure for Inside of Vehicle(Only When Vehicle Is To Be Scrapped) 08–10–18
Deployment Procedure for Outside of Vehicle.....08–10–24
AIR BAG MODULE AND PRE-TENSIONER SEAT BELT DISPOSAL PROCEDURES.....08–10–34
INSPECTION OF SST (DEPLOYMENT TOOL) 08–10–34
Inspection Procedure 08–10–35

AIR BAG SYSTEM LOCATION INDEX

E6U081000000W01

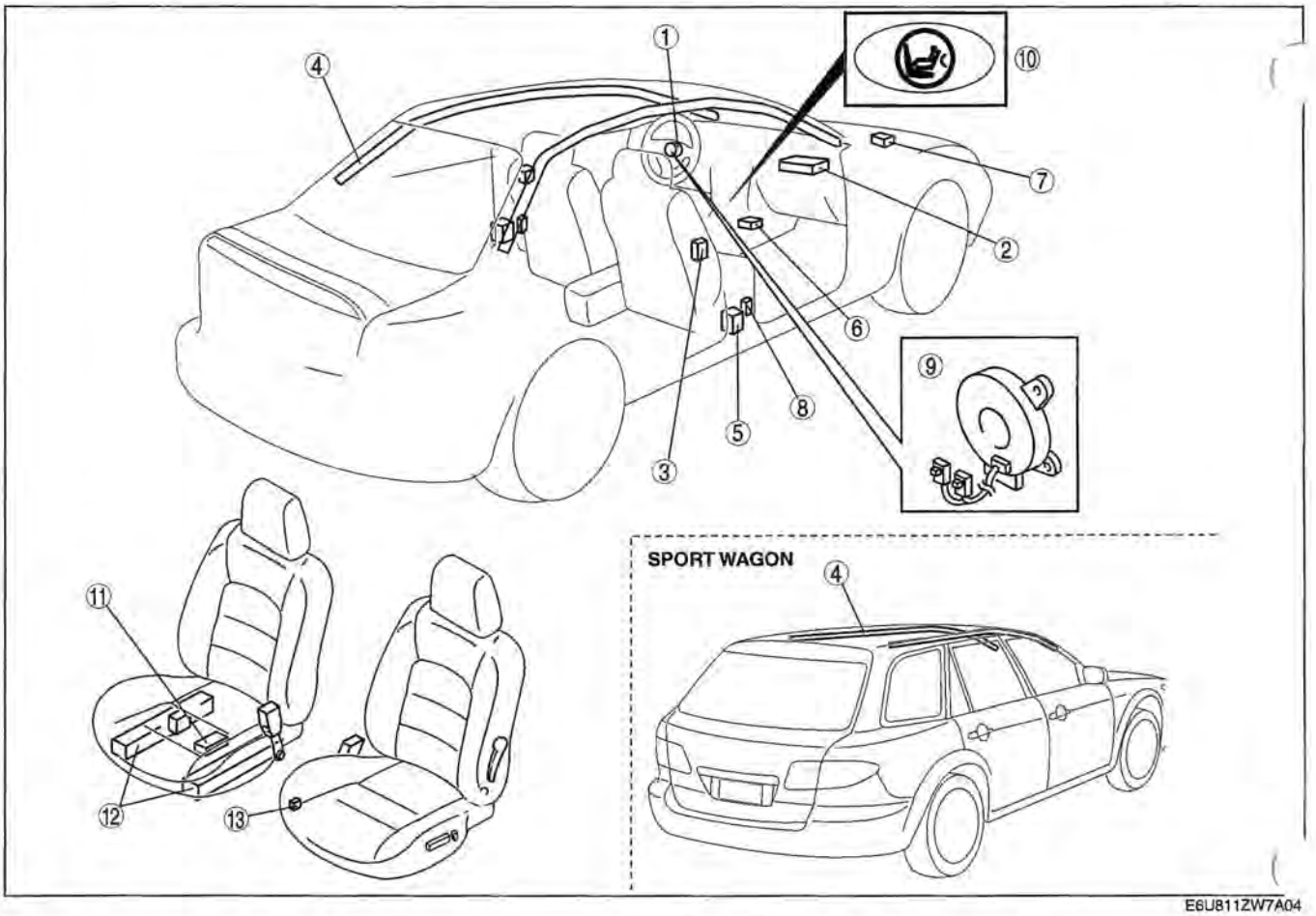

E6U811ZW7A04

1	Driver-side air bag module (See 08–10–6 DRIVER-SIDE AIR BAG MODULE REMOVAL/INSTALLATION.) (See 08–10–18 AIR BAG MODULE AND PRE-TENSIONER SEAT BELT DEPLOYMENT PROCEDURES.)
2	Passenger-side air bag module (See 08–10–7 PASSENGER-SIDE AIR BAG MODULE REMOVAL/INSTALLATION.) (See 08–10–18 AIR BAG MODULE AND PRE-TENSIONER SEAT BELT DEPLOYMENT PROCEDURES.)
3	Side air bag module (See 08–10–8 SIDE AIR BAG MODULE REMOVAL/INSTALLATION.) (See 08–10–18 AIR BAG MODULE AND PRE-TENSIONER SEAT BELT DEPLOYMENT PROCEDURES.)
4	Curtain air bag module (See 08–10–10 CURTAIN AIR BAG MODULE REMOVAL/INSTALLATION.) (See 08–10–18 AIR BAG MODULE AND PRE-TENSIONER SEAT BELT DEPLOYMENT PROCEDURES.)
5	Pre-tensioner seat belt (See 08–10–18 AIR BAG MODULE AND PRE-TENSIONER SEAT BELT DEPLOYMENT PROCEDURES.)
6	SAS control module (See 08–10–12 SAS CONTROL MODULE REMOVAL/INSTALLATION.)

7	Crash zone sensor (See 08–10–11 CRASH ZONE SENSOR REMOVAL/INSTALLATION.)
8	Side air bag sensor (See 08–10–12 SIDE AIR BAG SENSOR REMOVAL/INSTALLATION.)
9	Clock spring (See 08–10–15 CLOCK SPRING REMOVAL/INSTALLATION.) (See 08–10–17 CLOCK SPRING INSPECTION.) (See 08–10–16 CLOCK SPRING ADJUSTMENT.)
10	Passenger air bag deactivation (PAD) indicator (See 08–10–15 PASSENGER AIR BAG DEACTIVATION (PAD) INDICATOR REMOVAL/INSTALLATION.)
11	Seat weight sensor control module (See 08–10–13 SEAT WEIGHT SENSOR CONTROL MODULE REMOVAL/INSTALLATION [EXCEPT L3 WITH TC].) (See 08–10–14 SEAT WEIGHT SENSOR CONTROL MODULE REMOVAL/INSTALLATION [L3 WITH TC].)
12	Seat weight sensor (See 08–10–14 SEAT WEIGHT SENSOR CALIBRATION.) (See 08–10–15 SEAT WEIGHT SENSOR INSPECTION.)
13	Seat track position sensor (except L3 with TC) (See 08–10–13 SEAT TRACK POSITION SENSOR REMOVAL/INSTALLATION [EXCEPT L3 WITH TC].)

SERVICE WARNINGS

E6U081000000W02

Air Bag Module Inspection

- **Inspecting an air bag module using a tester can operate (deploy) the air bag module, which may cause serious injury. Do not use a tester to inspect an air bag module. Always use the on-board diagnostic function to diagnose the air bag module for malfunctions.**

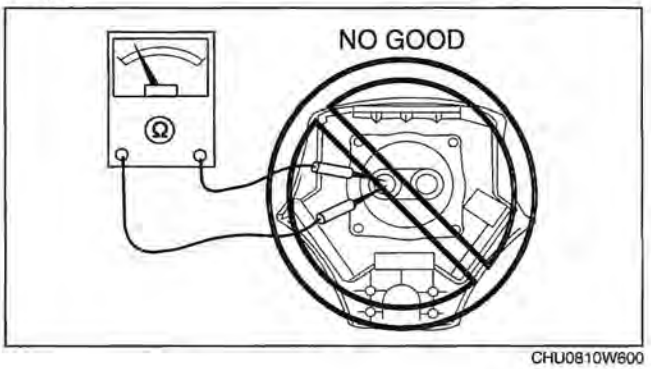

CHU0810W600

Air Bag Module Handling

- **Before removing the air bag module or disconnecting the air bag module connector, always turn the ignition switch to the LOCK position, disconnect the negative battery cable, and then wait for 1 min or more to allow the backup power supply of the SAS control module to deplete its stored power.**
- **Handling a live (undeployed) air bag module that is pointed toward your body could result in serious injury if the air bag module were to accidentally operate (deploy). When carrying a live (undeployed) air bag module, point the deployment surface away from your body to lessen the chance of injury in case it operates (deploys).**



CHU0810W601

- **A live (undeployed) air bag module placed with its deployment surface to ground is dangerous. If the air bag module were to accidentally operate (deploy), it could cause serious injury. Always place a live (undeployed) air bag module with its deployment surface up.**

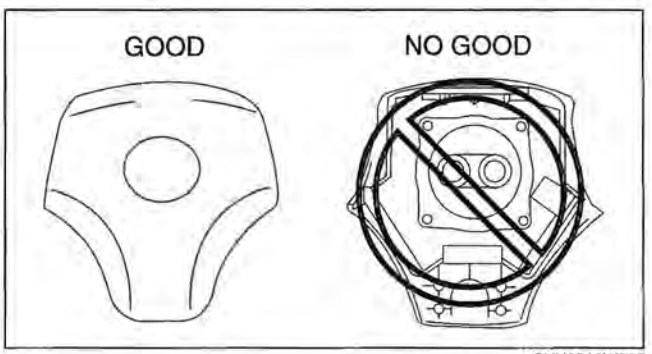

CHU0810W602

Side Air Bag Module Handling

- **When a side air bag module operates (deploys) due to a collision, the interior of the seat back (pad, frame, trim) may become damaged. If a side air bag does not operate (deploy) normally from a seat back that has been reused, a serious accident may result. After a side air bag has operated (deployed), always replace both the side air bag module and the seat back (pad, frame, trim) with new parts. After servicing, verify that the seat operates normally and that the wiring harness is not caught.**

Seat Weight Sensor Handling

- **The passenger-side seat and the seat weight sensor may become deformed or otherwise damaged due to operation (deployment) of the front or side air bag in an accident. This may cause the passenger sensing function to operate improperly and result in a serious accident. Always replace the passenger seat and seat weight sensor with new ones after the front or side air bags have operated (deployed). After servicing, verify that the seat operates normally and that the wiring harness is not caught. If the collision is not hard enough to cause the front or side air bags to operate (deploy), inspect the seat weight sensor and replace it if there is any malfunction.**

SAS Control Module Handling

- Removing the SAS control module or disconnecting the SAS control module connector with the ignition switch at the ON position can activate the sensor in the SAS control module and operate (deploy) the air bags and pre-tensioner seat belt, which may cause serious injury. Before removing th SAS control module or disconnecting the SAS control module connector, always turn the ignition switch to the LOCK position, disconnect the negative battery cable, and then wait for 1 min or more to allow the backup power supply of the SAS control module to deplete its stored power.
- Connecting the SAS control module connector with the SAS control module not securely fixed to the vehicle is dangerous. The sensor in the SAS control module could send an electrical signal to the air bag modules and pre-tensioner seat belt. This will operate (deploy) the air bags and pre-tensioner seat belt, which may result in serious injury. Therefore, before connecting the connector, securely fix the SAS control module to the vehicle.
- Because a sensor is built into the SAS control module, once the air bags and pre-tensioner seat belt have operated (deployed) due to a collision or other causes, the SAS control module must be replaced with a new one even if the used one does not have any visible external damage or deformation. The used SAS control module may have been damaged internally, which may cause improper operation. If the SAS control module is reused, the air bags and pre-tensioner seat belt may not operate (deploy) normally, which could result in a serious accident. Always replace the SAS control module with a new one. The SAS control module cannot be bench-checked or self-checked.

Crash Zone Sensor Handling

- Removing the crash zone sensor or disconnecting the crash zone sensor connector with the ignition switch at the ON position can activate the crash zone sensor and operate (deploy) the air bags and pre-tensioner seat belt, which may cause serious injury. Before removing the crash zone sensor or disconnecting the crash zone sensor connector, always turn the ignition switch to the LOCK position, disconnect the negative battery cable, and then wait for 1 min or more to allow the backup power supply of the SAS control module to deplete its stored power.
- If the crash zone sensor is subjected to shock or the sensor is disassembled, the air bags and pre-tensioner seat belt may accidentally operate (deploy) and cause injury, or the system may fail to operate normally and cause a serious accident. Do not subject the crash zone sensor to shock or disassemble the sensor.
- Because a sensor is built into the crash zone sensor, once the air bags and pre-tensioner seat belt hav operated (deployed) due to a collision or other causes, the crash zone sensor must be replaced with new one even if the used one does not have any visible external damage or deformation. If the crash zone sensor is reused, the air bags and pre-tensioner seat belt may not operate (deploy) normally, which could result in a serious accident. Always replace the crash zone sensor with a new one. The crash zone sensor cannot be bench-checked or self-checked.

Side Air Bag Sensor Handling

- Removing the side air bag sensor or disconnecting the side air bag sensor connector with the ignition switch at the ON position can activate the side air bag sensor and operate (deploy) the side air bag, which may cause serious injury. Before removing the side air bag sensor or disconnecting the side air bag sensor connector, always turn the ignition switch to the LOCK position, disconnect the negative battery cable, and then wait for 1 min or more to allow the backup power supply of the SAS control module to deplete its stored power.
- If the side air bag sensor is subjected to shock or the sensor is disassembled, the side air bag may accidentally operate (deploy) and cause injury, or the system may fail to operate normally and cause a serious accident. Do not subject the side air bag sensor to shock or disassemble the sensor.
- Because a sensor is built into the side air bag sensor, once the air bag has operated (deployed) due to a collision or other causes, the side air bag sensor must be replaced with a new one even if the used one does not have any visible external damage or deformation. If the side air bag sensor is reused, the side air bag may not operate (deploy) normally, which could result in a serious accident. Always replace the side air bag sensor with a new one. The side air bag sensor cannot be bench-checked or self-checked.

Pre-tensioner Seat mBelt Inspection

- **Inspecting a pre-tensioner seat belt using a tester can operate (deploy) the pre-tensioner seat belt, which may cause serious injury. Do not use a tester to inspect a pre-tensioner seat belt. Always use the on-board diagnostic function to diagnose the pre-tensioner seat belt for malfunctions.**

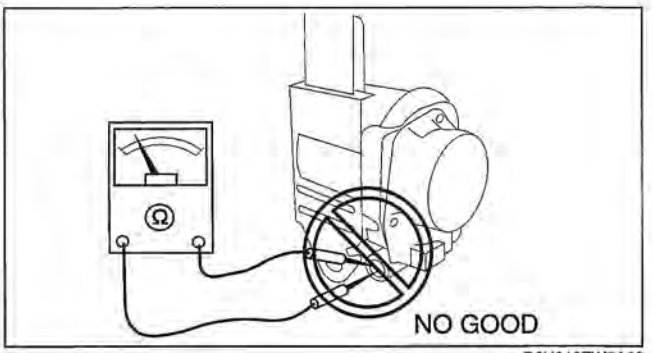

D6U810ZW7A02

SERVICE CAUTIONS

E6U081000000W03

Air Bag System Component Disassembly

- Disassembling the air bag system components could cause it to not operate (deploy) normally. Never disassemble any air bag system components.



CHU0810W604

Air Bag Module, Pre-tensioner Seat Belt Handling

- **Oil, grease, or water on the air bag modules may cause the air bags and pre-tensioner seat belt to fail to operate (deploy) in an accident. Never allow oil, grease, or water to get on the air bag modules or pre-tensioner seat belt.**
- **Inserting a screwdriver or similar object into the connector of an air bag module or a pre-tensioner seat belt may damage the connector and cause the air bag module or the pre-tensioner seat belt to operate (deploy) improperly, which may cause serious injury. Never insert any foreign objects into the air bag module or seat belt connectors.**

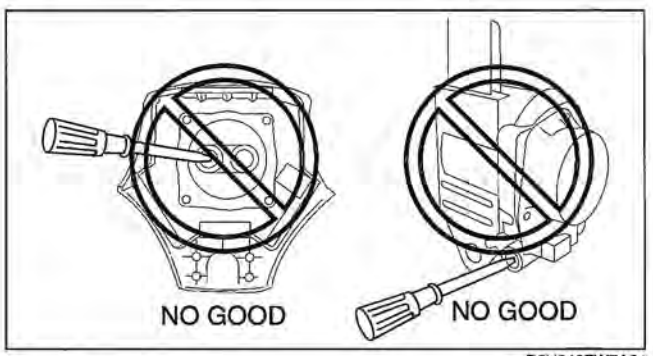

D6U810ZW7A01

Seat Weight Sensor Handling

- **The seat weight sensor has a built-in strain gauge which may operate improperly if the sensor is dropped by itself or when installed to the seat. If it is dropped, replace the seat weight sensor with a new one.**
- **Oil, grease, or water on the seat weight sensor may cause the system to operate (deploy) improperly. Never allow oil, grease, or water to get on the seat weight sensor.**
- **Foreign material in the seat weight sensor components may cause the system to operate (deploy) improperly. Always make sure that no foreign material can get into the seat weight sensor.**
- **Disassembling the seat weight sensor, or tightening any of the nuts and bolts installed to the sensor body may cause it to operate (deploy) improperly. Never disassemble the seat weight sensor or tighten any of the nuts or bolts installed to the body of the sensor.**

Bag Module, Pre-tensioner Seat Belt Reuse

Even if an air bag module or a pre-tensioner seat belt does not operate (deploy) in a collision and does not have any external signs of damage, it may have been damaged internally, which may cause improper operation. Before reusing a live (undeployed) air bag module and the pre-tensioner seat belt, always use the on-board diagnostic to diagnose the air bag module and the pre-tensioner seat belt to verify that they have no malfunction.

Air Bag Wiring Harness Repair

- Incorrectly repairing an air bag wiring harness can accidentally operate (deploy) the air bag module and pre-tensioner seat belt. If a problem is found in the air bag wiring harness, always replace the wiring harness with a new one.

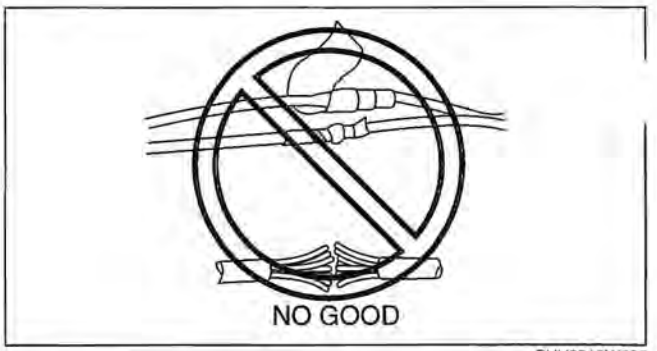

CHU0810W606

DRIVER-SIDE AIR BAG MODULE REMOVAL/INSTALLATION

E6U081057010W01

Warning

- **Handling the air bag system components improperly can accidentally operate (deploy) the air bag modules and pre-tensioner seat belts, which may seriously injure you. Read the service warnings and cautions before handling the air bag system components. (See 08–10–3 SERVICE WARNINGS.)(See 08–10–5 SERVICE CAUTIONS.)**
- **Due to the adoption of 2-step deployment control in the driver-side air bag module, depending on the impact force, it is possible that inflator No. 2 might not deploy. In such cases, before disposing of the air bag module, make sure to follow the inflator deployment procedures and verify complete deployment of inflators No. 1 and 2.**

1. Turn the ignition switch to the LOCK position.
2. Disconnect the negative battery cable and wait for **1 min or more**.
3. Remove in the order indicated in the table.

1	Cover
2	Bolt
3	Connector (See 08–10–6 Connector Removal Note)
4	Driver-side air bag module

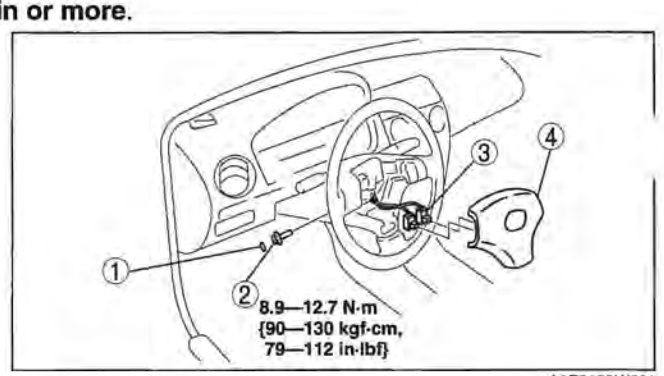

A6E8130W001

4. Install in the reverse order of removal.
5. Turn the ignition switch to the ON position.
6. Verify that the air bag system warning light illuminates for **approx. 6 s** and goes out.
   - If the air bag system warning light does not operate in the manner described above, there are malfunctions in the system. Inspect the system using the on-board diagnostic.

Connector Removal Note

1. Using a flathead screwdriver, pry out the connector's stopper plate.
2. Disconnect the connector.

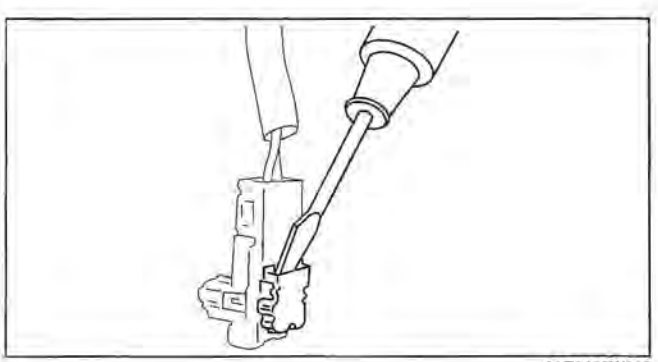

A6E8130W002

PASSENGER-SIDE AIR BAG MODULE REMOVAL/INSTALLATION

E6U081057050W01

Warning

- **Handling the air bag system components improperly can accidentally operate (deploy) the air bag modules and pre-tensioner seat belts, which may seriously injure you. Read the service warnings and cautions before handling the air bag system components. (See 08–10–3 SERVICE WARNINGS.)(See 08–10–5 SERVICE CAUTIONS.)**
- **Due to the adoption of 2-step deployment control in the passenger-side air bag module, depending on the impact force, it is possible that inflator No. 2 might not deploy. In such cases, before disposing of the air bag module, make sure to follow the inflator deployment procedures and verify complete deployment of inflators No. 1 and 2.**

1. Turn the ignition switch to the LOCK position.
2. Disconnect the negative battery cable and wait for **1 min or more**.
3. Remove the glove compartment.
4. Remove in the order indicated in the table.

1	Connector (See 08–10–7 Connector Removal Note)
2	Bolt
3	Passenger-side air bag module

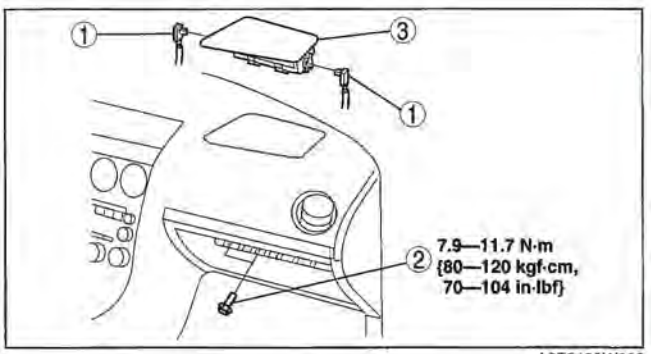

A6E8130W003

5. Install in the reverse order of removal.
6. Turn the ignition switch to the ON position.
7. Verify that the air bag system warning light illuminates for **approx. 6 s** and goes out.
   - If the air bag system warning light does not operate in the manner described above, there are malfunctions in the system. Inspect the system using the on-board diagnostic.

Connector Removal Note

1. Using a flathead screwdriver, pry out the connector stopper plate.
2. Disconnect the connector.

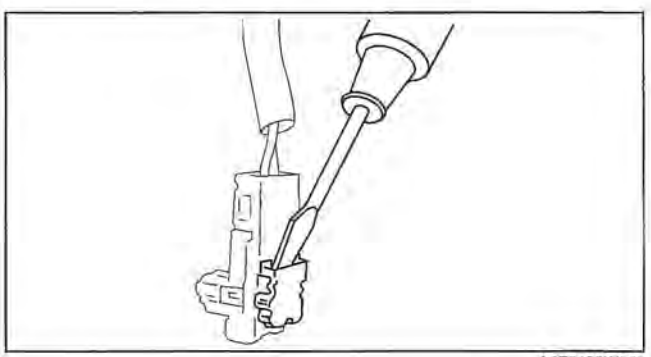

A6E8130W002

SIDE AIR BAG MODULE REMOVAL/INSTALLATION

E6U081000147W01

Warning

- **Handling the air bag system components improperly can accidentally operate (deploy) the air bag modules and pre-tensioner seat belts, which may seriously injure you. Read the service warnings and cautions before handling the air bag system components. (See 08–10–3 SERVICE WARNINGS.)(See 08–10–5 SERVICE CAUTIONS.)**
- **If the side air bag module is installed with debris in the seat back, the foreign material may be scattered when the side air bag module operates (deploys), causing injury. Verify that there is no foreign material in the seat back before installing the side air bag module.**

1. Remove in the order indicated in the table.

1	Cover
2	Bolt
3	Connector (See 08–10–8 Connector Removal Note)
4	Side air bag module

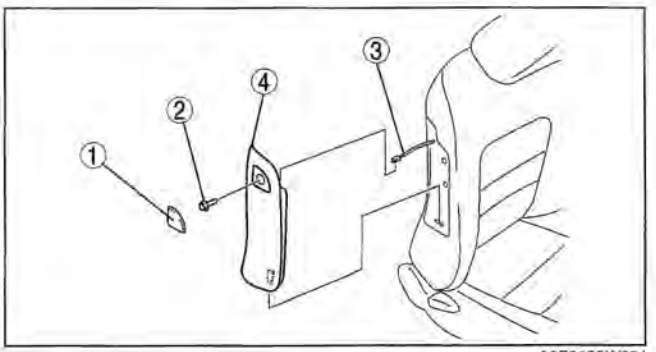

A6E8130W004

2. Install in the reverse order of removal.
3. Turn the ignition switch to the ON position.
4. Verify that the air bag system warning light illuminates for **approx. 6 s** and goes out.
   - If the air bag system warning light does not operate in the manner described above, there are malfunctions in the system. Inspect the system using the on-board diagnostic.

Connector Removal Note

1. Using a flathead screwdriver, pry out the connector's stopper plate.
2. Disconnect the connector.

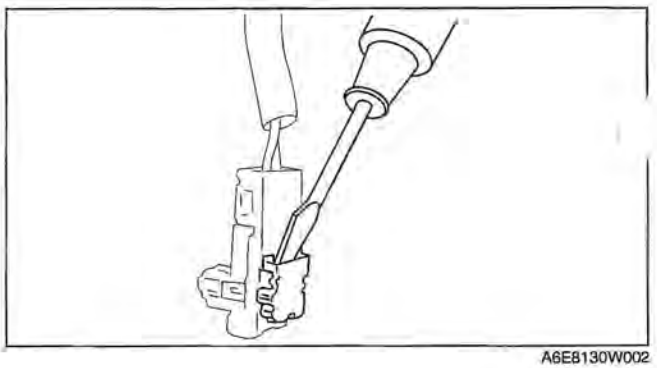

A6E8130W002

SIDE AIR BAG MODULE REMOVAL/INSTALLATION [L3 WITH TC]

E6U081000147W02

Warning

- **Handling the air bag module improperly can accidentally deploy the air bag module, which may seriously injure you. Read the air bag system service warnings and cautions before handling the air bag module. (See 08–10–3 SERVICE WARNINGS.) (See 08–10–5 SERVICE CAUTIONS.)**

Warning

- **If the side air bag module is installed with debris in the seat back, the foreign material may be scattered when the side air bag module operates (deploys), causing injury. Verify that there is no foreign material in the seat back before installing the side air bag module.**

1. Turn the ignition switch to the LOCK position.
2. Disconnect the negative battery cable and wait for **1 min or more**.
3. Remove the front seat. (See 09–13–5 FRONT SEAT REMOVAL/INSTALLATION [EXCEPT L3 WITH TC].) (See 09–13–4 FRONT SEAT REMOVAL/INSTALLATION [L3 WITH TC].)
4. Partially peel back the seat back trim.
5. Remove in the order indicated in the table.

1	Connector
2	Bolt A
3	Holder bracket
4	Bolt B
5	Side air bag module

6. Install in the reverse order of removal.
7. Turn the ignition switch to ON position.
8. Verify that the air bag system warning light illuminates for **approx. 6 s** and then goes off.
   - If the air bag system warning light does not operate in the manner described above, there are malfunctions in the system. Inspect the system using the on-board diagnostic.

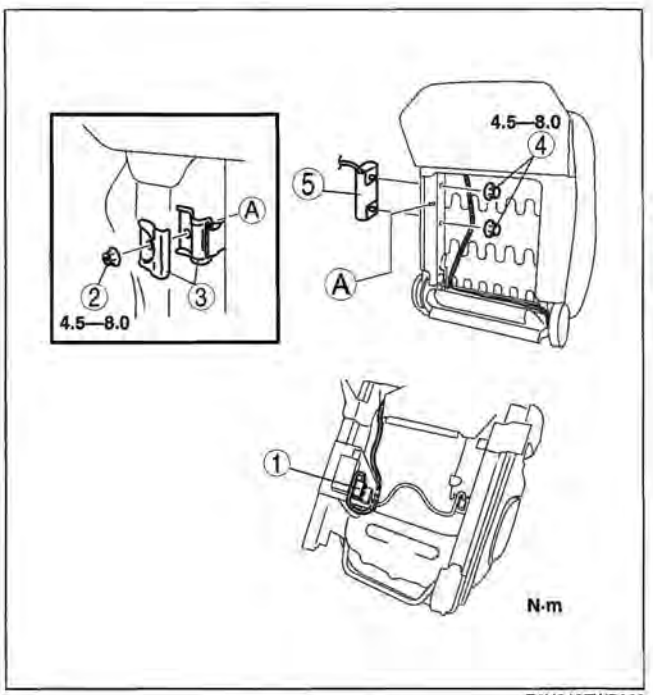

E6U810ZWB002

CURTAIN AIR BAG MODULE REMOVAL/INSTALLATION

E6U081000171W01

Warning

- **Handling the air bag system components improperly can accidentally operate (deploy) the air ba modules and pre-tensioner seat belts, which may seriously injure you. Read the service warning and cautions before handling the air bag system components. (See 08–10–3 SERVICE WARNINGS.)(See 08–10–5 SERVICE CAUTIONS.)**

1. Turn the ignition switch to the LOCK position.
2. Disconnect the negative battery cable and wait for **1 min or more**.
3. Remove the headliner. (See 09–17–24 HEADLINER REMOVAL/INSTALLATION.)
4. Remove in the order indicated in the table.

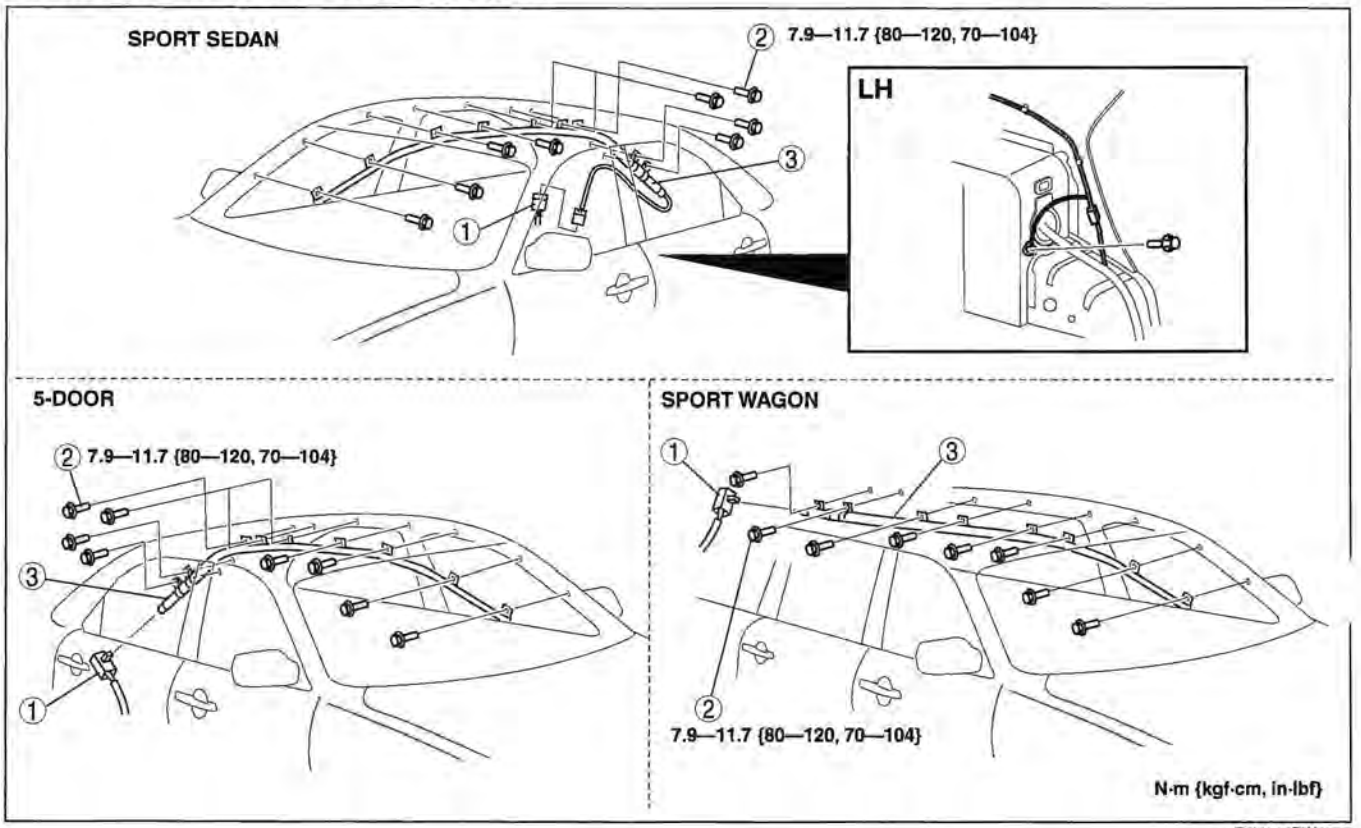

E6U810ZW5102

1	Connector (See 08–10–11 Connector Removal Note (5-Door, Sport Wagon).)

2	Bolt
3	Curtain air bag module

5. Install in the reverse order of removal.
6. Turn the ignition switch to the ON position.
7. Verify that the air bag system warning light illuminates for **approx. 6 s** and goes out.
   - If the air bag system warning light does not operate in the manner described above, there are malfunctions in the system. Inspect the system using the on-board diagnostic.

Connector Removal Note (5-Door, Sport Wagon)

1. Using a flathead screwdriver, pry out the connector's stopper plate.
2. Disconnect the connector.

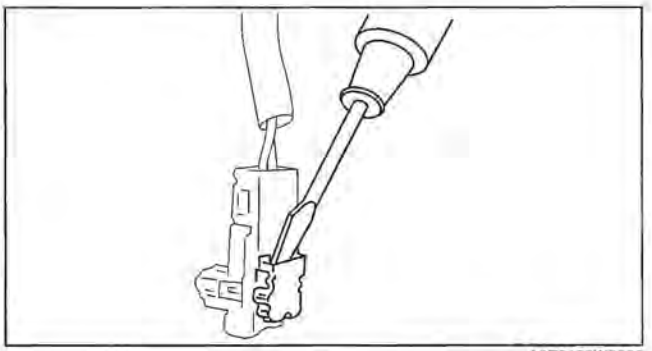

A6E8130W0022

CRASH ZONE SENSOR REMOVAL/INSTALLATION

E6U081000145W01

Warning

- **Handling the air bag system components improperly can accidentally operate (deploy) the air bag modules and pre-tensioner seat belts, which may seriously injure you. Read the service warnings and cautions before handling the air bag system components. (See 08–10–3 SERVICE WARNINGS.)(See 08–10–5 SERVICE CAUTIONS.)**

1. Turn the ignition switch to the LOCK position.
2. Disconnect the negative battery cable and wait for **1 min or more**.
3. Remove the radiator grille. (L3, AJ) (See 09–16–3 RADIATOR GRILLE REMOVAL/INSTALLATION.)
4. Remove the front bumper. (L3 with TC) (See 09–10–10 FRONT BUMPER REMOVAL/INSTALLATION.)
5. Remove in the order indicated in the table.

1	Bolt
2	Cover
3	Bolt
4	Connector
5	Crash zone sensor

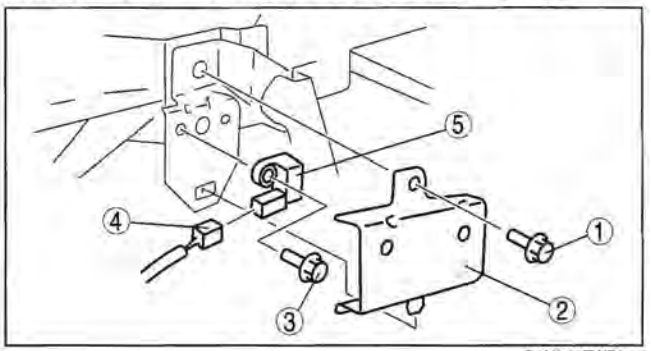

E6UB10ZWB004

6. Install in the reverse order of removal.
7. Turn the ignition switch to the ON position.
8. Verify that the air bag system warning light illuminates for **approx. 6 s** and goes out.
   - If the air bag system warning light does not operate in the manner described above, there are malfunctions in the system. Inspect the system using the on-board diagnostic function.

SIDE AIR BAG SENSOR REMOVAL/INSTALLATION

E6U081000146W01

Warning

- **Handling the air bag system components improperly can accidentally operate (deploy) the air bag modules and pre-tensioner seat belts, which may seriously injure you. Read the service warnings and cautions before handling the air bag system components. (See 08–10–3 SERVICE WARNINGS.)(See 08–10–5 SERVICE CAUTIONS.)**

1. Turn the ignition switch to the LOCK position.
2. Disconnect the negative battery cable and wait for **1 min or more**.
3. Remove the B-pillar lower trim. (See 09–17–10 B-PILLAR LOWER TRIM REMOVAL/INSTALLATION.)
4. Remove in the order indicated in the table.

1	Bolt
2	Connector
3	Side air bag sensor

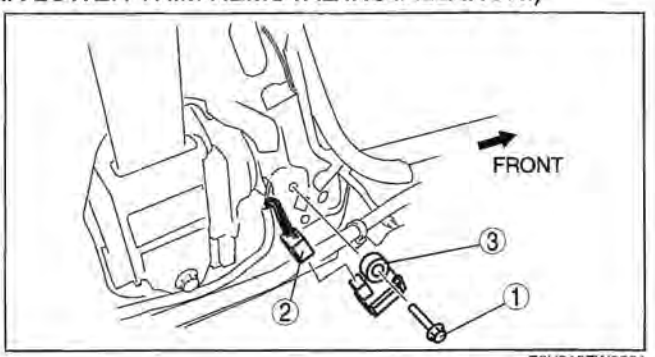

E6U810ZW5001

5. Install in the reverse order of removal.
6. Turn the ignition switch to the ON position.
7. Verify that the air bag system warning light illuminates for **approx. 6 s** and goes out.
   - If the air bag system warning light does not operate in the manner described above, there are malfunctions in the system. Inspect the system using the on-board diagnostic function.

SAS CONTROL MODULE REMOVAL/INSTALLATION

E6U081057030W01

Warning

- **Handling the air bag system components improperly can accidentally operate (deploy) the air bag modules and pre-tensioner seat belts, which may seriously injure you. Read the service warnings and cautions before handling the air bag system components. (See 08–10–3 SERVICE WARNINGS.)(See 08–10–5 SERVICE CAUTIONS.)**

1. Turn the ignition switch to the LOCK position.
2. Disconnect the negative battery cable and wait for **1 min or more**.
3. Partially peel off the floor covering.
4. Remove in the order indicated in the table.

1	Bolt
2	Connector
3	SAS control module

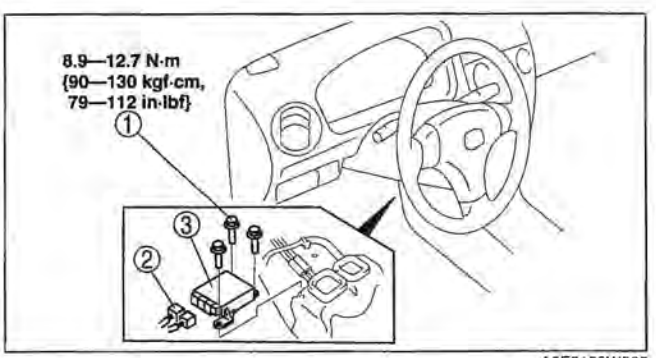

A6E8130W006

5. Install in the reverse order of removal.
6. Turn the ignition switch to the ON position.
7. Verify that the air bag system warning light illuminates for **approx. 6 s** and goes out.
   - If the air bag system warning light does not operate in the manner described above, there are malfunctions in the system. Inspect the system using the on-board diagnostic.

SEAT TRACK POSITION SENSOR REMOVAL/INSTALLATION [EXCEPT L3 WITH TC]

E6U081057030W05

1. Turn the ignition switch to the LOCK position.
2. Disconnect the negative battery cable and wait for **1 min or more.**
   Remove in the order indicated in the table.

1	Connector
2	Bolt
3	Seat track position sensor

4. Install in the reverse order of removal.

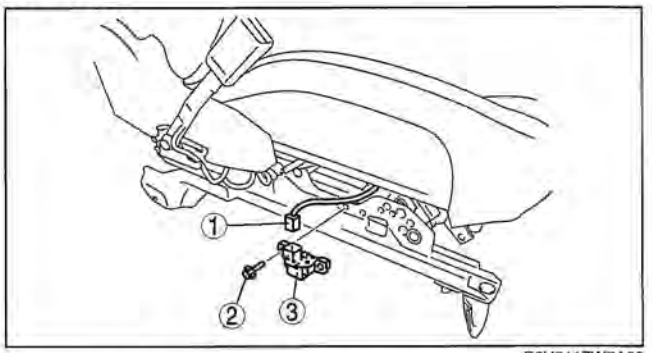

E6U811ZW7A02

SEAT WEIGHT SENSOR CONTROL MODULE REMOVAL/INSTALLATION [EXCEPT L3 WITH TC]

E6U081057030W02

Caution

- **When the seat weight sensor control module is replaced with a new one, perform the seat weight sensor calibration using the WDS or equivalent. (See 08–10–14 SEAT WEIGHT SENSOR CALIBRATION.)**

Removal

1. Turn the ignition switch to the LOCK position.
2. Disconnect the negative battery cable and wait for **1 min or more.**
3. Remove the front passenger's seat. (See 09–13–5 FRONT SEAT REMOVAL/INSTALLATION [EXCEPT L3 WITH TC].)
4. Remove the seat weight sensor control module connector.
5. Remove the seat weight sensor control module installation rivets using a drill.
6. Remove the seat weight sensor control module.

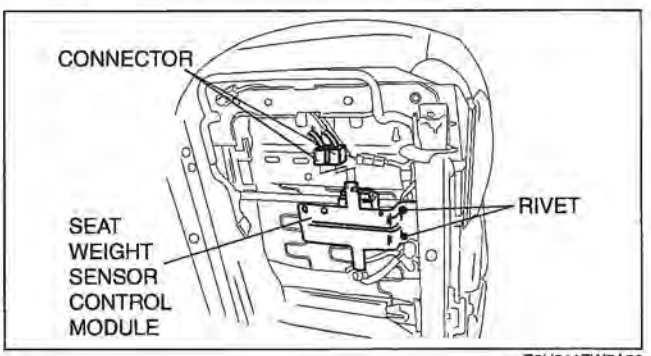

E6U811ZW7A03

Installation

1. Remove the seat adjuster. (See 09–13–9 FRONT SEAT DISASSEMBLY/ASSEMBLY [EXCEPT L3 WITH TC].)
2. Set the rivet to the riveter, and then secure the seat weight sensor control module to the seat adjusater with the rivets.
3. Install in the reverse order of removal.

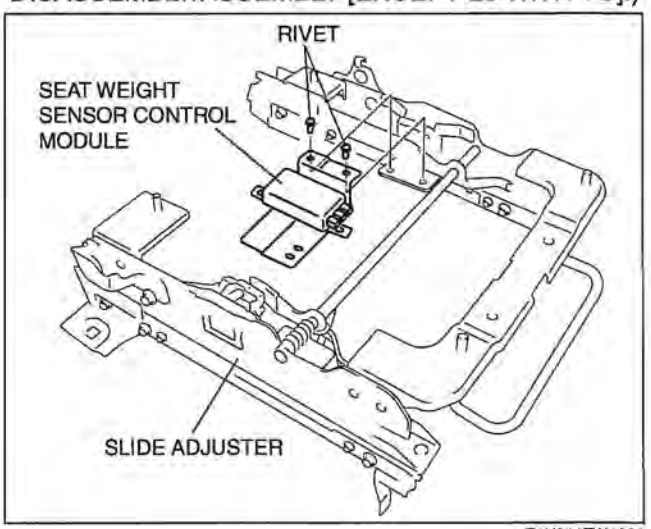

E6U811ZW7A01

SEAT WEIGHT SENSOR CONTROL MODULE REMOVAL/INSTALLATION [L3 WITH TC]

E6U081057030W06

Caution

- **When the seat weight sensor control module is replaced with a new one, perform the seat weight sensor calibration using the WDS or equivalent. (See 08–10–14 SEAT WEIGHT SENSOR CALIBRATION.)**

1. Turn the ignition switch to the LOCK position.
2. Disconnect the negative battery cable and wait for **1 min or more**.
3. Remove the front passenger's seat. (See 09–13–4 FRONT SEAT REMOVAL/INSTALLATION [L3 WITH TC].)
4. Remove in the order indicated in the table.

1	Connector
2	Nut
3	Seat weight sensor control module

5. Install in the reverse order of removal.

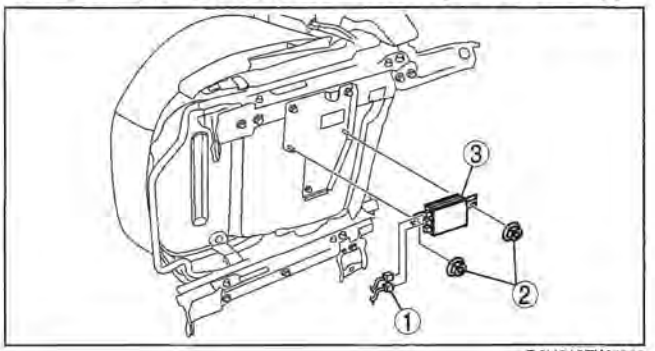

D6U810ZW7001

SEAT WEIGHT SENSOR CALIBRATION

E6U081057030W03

Caution

- **If any of the following work is performed, perform the seat weight sensor calibration using the WDS or equivalent.**
  - **— Replacement with a new seat weight sensor**
  - **— Replacement with a new seat weight sensor control module**
  - **— Replacement with new passenger-side seat parts**
  - **— Disassembly of the passenger-side seat**
- **If any of the following work is performed, perform the seat weight sensor inspection using the WDS or equivalent. (See 08–10–15 SEAT WEIGHT SENSOR INSPECTION.)**
  - **— Removal of the passenger-side seat**
  - **— Loosening and retightening of passenger's seat fixing bolts**
  - **— Or, the vehicle is involved in a collision**

1. Have two **20 kg {44 lb}** weights ready to use.
2. Connect the WDS or equivalent to the DLC-2 (16-pin).
3. Select "Body" from the menu.
4. Select "Restraints".
5. Select "Seat Weight Sensor ReZero Procedure".
6. Perform calibration following the procedures on the WDS or equivalent screen.

Note

- When "Lightly pat the passenger seat cushion" is displayed on the WDS or equivalent screen, lightly pat horizontally approx. five times on the headrest or upper side of the seat back trim of the passenger-side front seat.

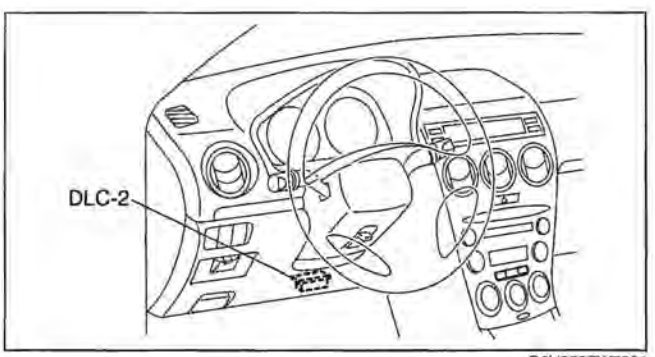

D6U802ZW7001

SEAT WEIGHT SENSOR INSPECTION

E6U081057030W04

Caution

- **If any of the following work is performed, perform the seat weight sensor inspection using the WDS or equivalent.**
  - **— Removal of the passenger-side seat**
  - **— Loosening and retightening of passenger's seat fixing bolts**
  - **— Or, the vehicle is involved in a collision**
- **If any of the following work is performed, perform the seat weight sensor calibration using the WDS or equivalent. (See 08–10–14 SEAT WEIGHT SENSOR CALIBRATION.)**
  - **— Replacement with a new seat weight sensor**
  - **— Replacement with a new seat weight sensor control module**
  - **— Replacement with new passenger-side seat parts**
  - **— Disassembly of the passenger-side seat**

1. Connect the WDS or equivalent to the DLC-2 (16-pin).
2. Select "Body" from the menu.
3. Select "Restraints".
4. Select "Seat Weight Sensor ReZero Procedure".
5. Perform inspection following the procedures on the WDS or equivalent screen.

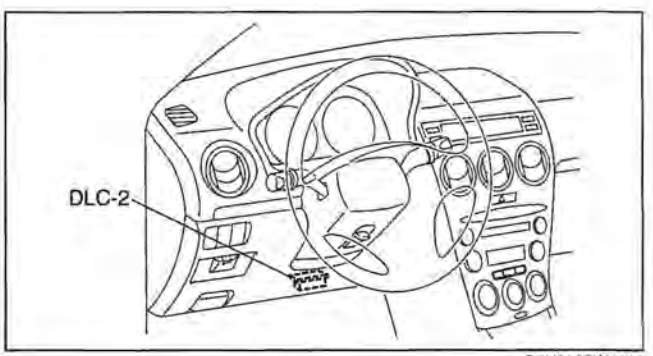

D6U802ZW7001

PASSENGER AIR BAG DEACTIVATION (PAD) INDICATOR REMOVAL/INSTALLATION

E6U081000000W04

1. Disconnect the negative battery cable.
2. Remove the center panel unit. (See 09–20–4 CENTER PANEL UNIT REMOVAL/INSTALLATION.)
   Remove in the order indicated in the table.

1	Socket
2	Passenger air bag deactivation (PAD) indicator bulb

4. Install in the reverse order of removal.

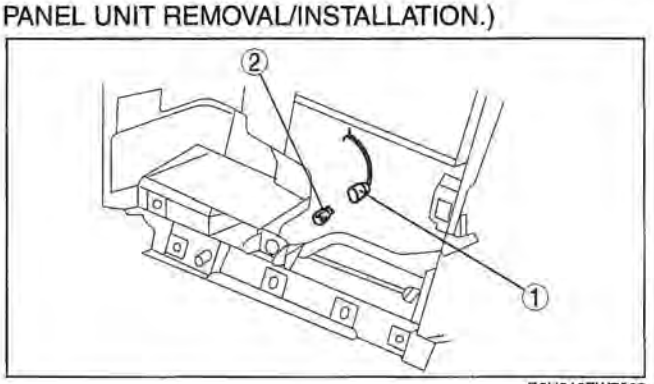

D6U810ZW7002

CLOCK SPRING REMOVAL/INSTALLATION

E6U081066123W01

1. Disconnect the negative battery cable.
2. Remove the driver-side air bag module. (See 08–10–6 DRIVER-SIDE AIR BAG MODULE REMOVAL/INSTALLATION.)
3. Remove the steering wheel. (See 06–12–7 STEERING WHEEL AND COLUMN REMOVAL/INSTALLATION.)
4. Remove the column cover.
5. Remove in the order indicated in the table.

1	Screw
2	Connector
3	Clock spring (See 08–10–16 Clock Spring Installation Note)

6. Install in the reverse order of removal.
7. Verify that the air bag system warning light illuminates for **approx. 6 s** and goes out.
   - If the air bag system warning light does not operate in the manner described above, there are malfunctions in the system. Inspect the system using the on-board diagnostic.

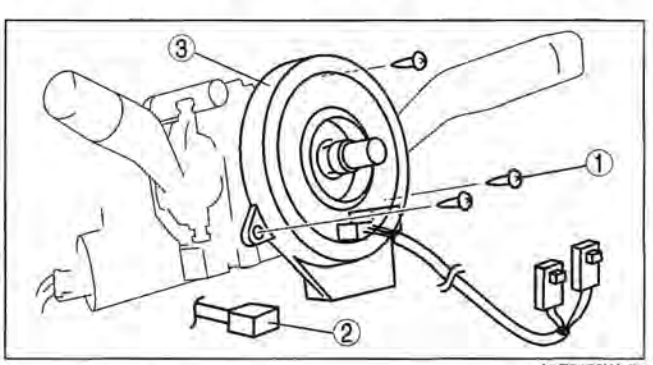

A6E8130W008

Clock Spring Installation Note

Caution
- **If the clock spring is not adjusted, the spring wire in the clock spring will break due to overtensic when the steering wheel is turned. Always adjust the clock spring after installing it.**

- Adjust the clock spring after installing it. (See 08–10–16 CLOCK SPRING ADJUSTMENT.)

CLOCK SPRING ADJUSTMENT

E6U081066123W02

Note
- The adjustment procedure is also specified on the caution label of the clock spring.

1. Set the front wheels straight ahead.

Caution
- **The clock spring will break if over-wound. Do not forcibly turn the clock spring.**

2. Turn the clock spring clockwise until it stops.

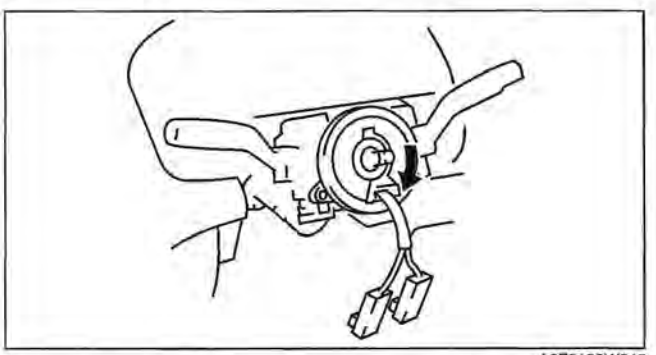

A6E8130W046

3. Turn the clock spring counterclockwise **2 3/4 turns**.

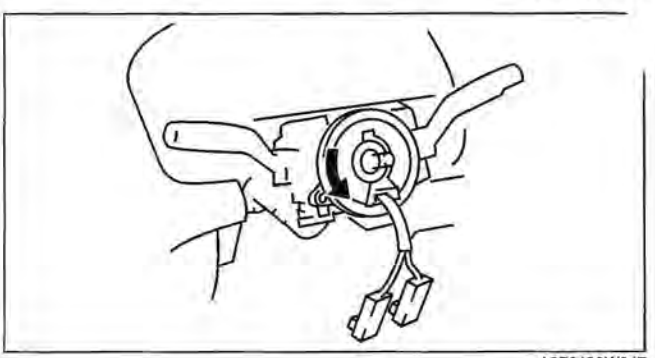

A6E8130W047

4. Align the mark on the clock spring with the mark on the outer housing.

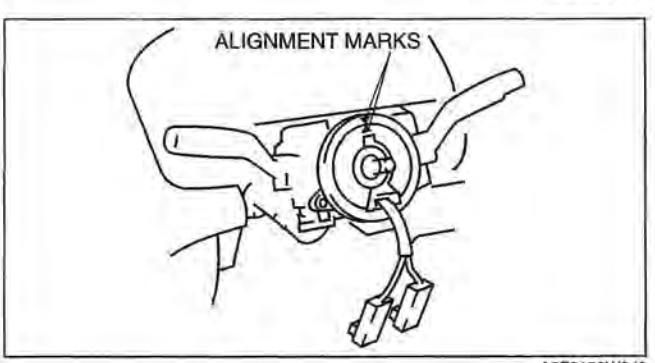

A6E8130W048

CLOCK SPRING INSPECTION

E6U081066123W03

1. Remove the clock spring. (See 08–10–15 CLOCK SPRING REMOVAL/INSTALLATION.)
2. Verify that the continuity is as indicated in the table.
   - If not as indicated in the table, replace the clock spring.

Note

- When the vehicle-side connector for the clock spring is disconnected, terminals 1A, 1B, 1C and 1D are shorted to prevent unexpected operation (deployment) of the air bag module.

O—O: Continuity

Test condition	Terminal																				
	1A	1B	1C	1D	2A	2B	2C	2D	2E	2G	2H	3A	3B	4A	4B	5A	5B	5C	5D	5E	5G	5H
Under any condition	O	O												O	O							
			O	O								O	O									
					O											O						
						O											O					
							O											O				
								O											O			
									O											O		
										O											O	
											O											O

A6E8130W009

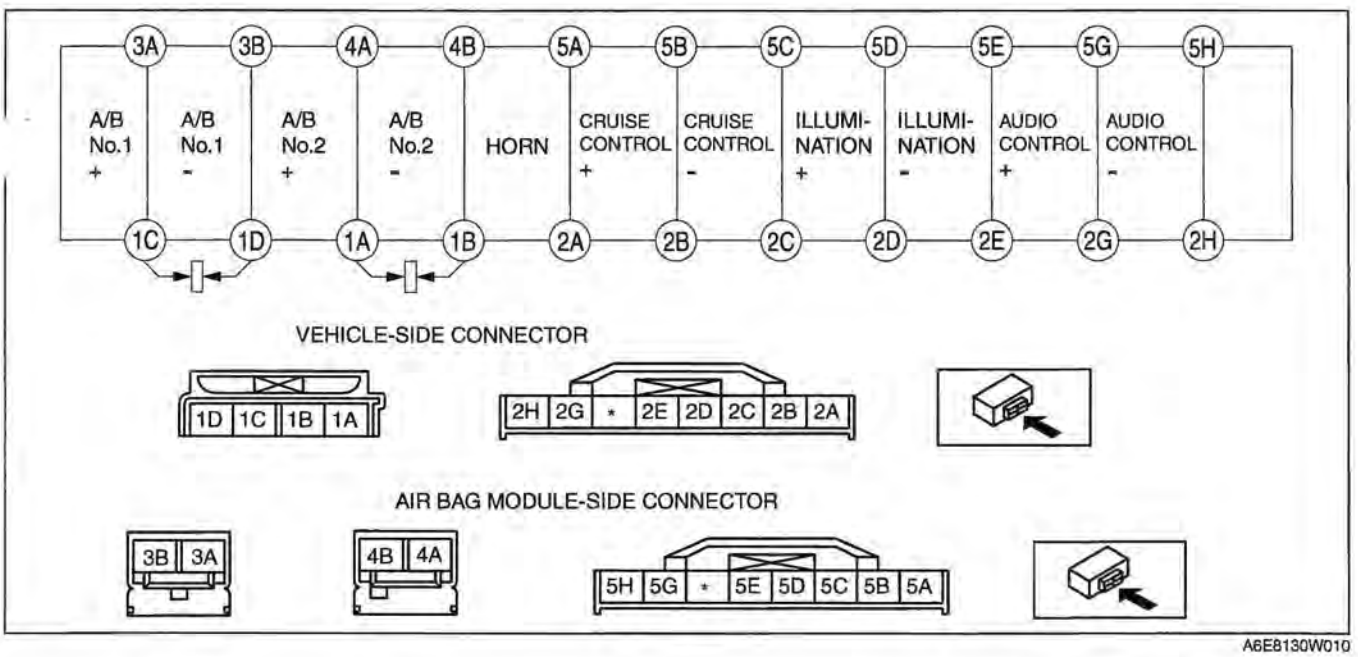

A6E8130W010

AIR BAG MODULE AND PRE-TENSIONER SEAT BELT DEPLOYMENT PROCEDURES

E6U081057000W01

Warning

- **A live (undeployed) air bag module and pre-tensioner seat belt may accidentally deploy when it is disposed of and cause serious injury. Do not dispose of a live (undeployed) air bag module and pre-tensioner seat belt. If the SSTs (Deployment tool and Adapter harness) are not available, consult the nearest Mazda representative for assistance.**

Caution

- **Deploying the air bag modules and pre-tensioner seat belts inside the vehicle may cause damage to the vehicle interior. When the vehicle is not to be scrapped, always deploy the air bag modules and pre-tensioner seat belts outside the vehicle.**

- When the vehicle is to be scrapped, deploy the air bag modules and pre-tensioner seat belts inside the vehicle. (See 08–10–18 Deployment Procedure for Inside of Vehicle (Only When Vehicle Is To Be Scrapped).)
- When the vehicle is not to be scrapped, deploy the air bag modules and pre-tensioner seat belts outside the vehicle. (See 08–10–24 Deployment Procedure for Outside of Vehicle.)

Note

- When disposing of a deployed air bag module and pre-tensioner seat belt, refer to the disposal procedure, (See 08–10–34 AIR BAG MODULE AND PRE-TENSIONER SEAT BELT DISPOSAL PROCEDURES.)

Deployment Procedure for Inside of Vehicle (Only When Vehicle Is To Be Scrapped)

1. Inspect the **SST** (Deployment tool). (See 08–10–34 INSPECTION OF SST (DEPLOYMENT TOOL).)
2. Move the vehicle to an open space, away from strong winds, and close all of the vehicle's doors and windows.
3. Turn the ignition switch to the LOCK position.
4. Disconnect the negative battery cable and wait for **1 min or more**.
5. Follow the appropriate procedure for deploying the driver-side air bag module, passenger-side air bag module, side air bag module, curtain air bag module, or pre-tensioner seat belt.

Driver-side air bag module

Warning

- **The driver-side air bag module is a dual inflator type. If one inflator is forced to operate (deploy), the other may operate (deploy) accidentally. To prevent injury while disposing of the air bag module, make sure to operate (deploy) both driver-side air bag module inflators simultaneously, following the procedure below.**

Note

- The **SSTs**, two types of adapter harnesses (for inflators No.1 and No.2) and two deployment tools are to be used to operate (deploy) the driver-side air bag module.

1. Remove the driver-side air bag module. (See 08–10–6 DRIVER-SIDE AIR BAG MODULE REMOVAL/INSTALLATION.)
2. Connect the SST (Adapter harness) to the driver-side air bag module as shown in the figure.
3. Install the driver-side air bag module. (See 08–10–6 DRIVER-SIDE AIR BAG MODULE REMOVAL/INSTALLATION.)

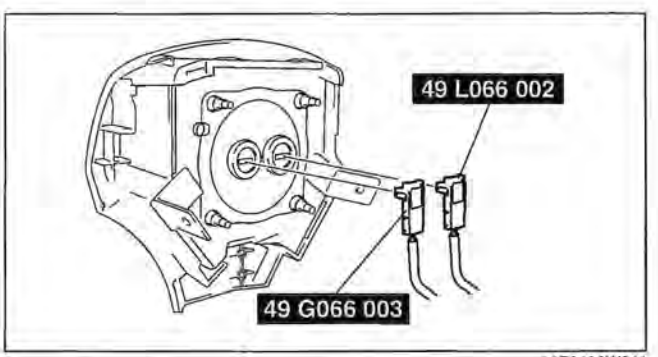

A6E8130W011

4. Connect the **SST** (Deployment tool) to the SST (Adapter harness).

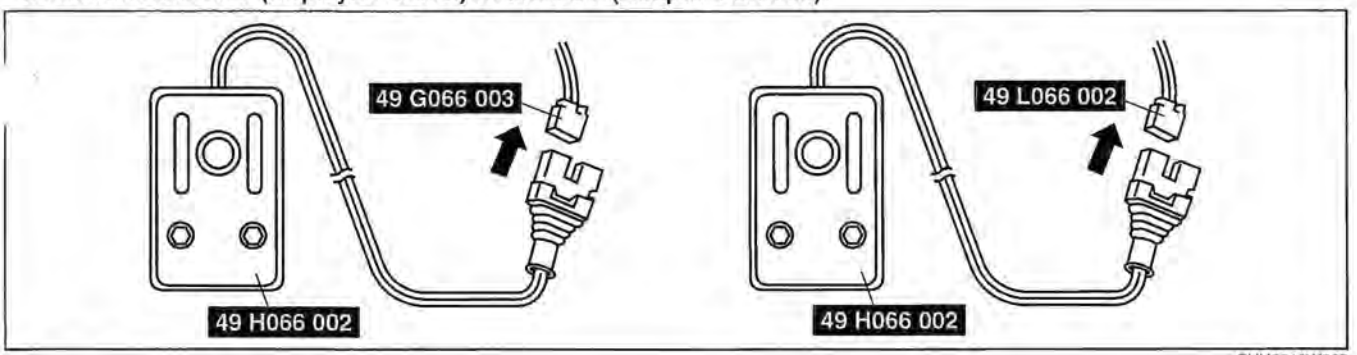

CHU0810W302

5. Connect both **SSTs** (Deployment tool) to the battery. Connect the power supply red clip to the positive battery terminal, and the black clip to the negative battery terminal.
6. Verify that the red lamp on both **SSTs** (Deployment tool) is illuminated.
7. Make sure all persons are standing **at least 6 m {20 ft}** away from the vehicle.
8. Press the activation switch on the **SST** (Deployment tool) connected with 49 L066 002 (a yellow connector) of the **SST** (Adapter harness), and **after 3 s**, press the activation switch on the other **SST** (Deployment tool) to operate (deploy) the air bag module (both inflators).

Warning

- **Verify that air bag module operation (explosive) sound occurs twice. if no operation (explosive) sound was heard or a single operation (explosive) sound was heard, both inflators would not have operated (deployed) properly. This may cause serious injury because the air bag module may operate (deploy) accidentally. if the two operation (explosive) sounds are not heard, perform Step 8 again. In case that the two operation (explosive) sounds in total are not verified even though Step 8 is performed again, leave the air bag module alone for 30 min or more before getting near it again.**
- **The air bag module is very hot immediately after it is operated (deployed). You can get burned. Do not touch the air bag module for at least 15 min after deployment.**

9. Disconnect the **SST** (Deployment tool) from the **SST** (Adapter harness).

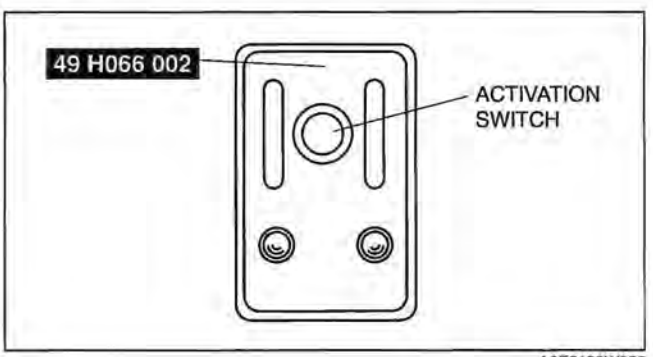

A6E8130W028

Passenger-side air bag module

Warning

- **The passenger-side air bag module is a dual inflator type. If one inflator is forced to operate (deploy), the other may operate (deploy) accidentally. To prevent injury while disposing of the air bag module, make sure to operate (deploy) both passenger-side air bag module inflators simultaneously, following the procedure below.**

Note

- The **SSTs**, two types of adapter harnesses (for inflators No.1 and No.2) and two deployment tools are to be used to operate (deploy) the passenger-side air bag module.

Remove the glove compartment. (See 09–17–9 GLOVE COMPARTMENT REMOVAL/INSTALLATION.)

_. Disconnect the passenger-side air bag module connector.

3. Connect the **SST** (Adapter harness) to the passenger-side air bag module as shown in the figure.
4. Connect the **SST** (Deployment tool) to the **SST** (Adapter harness).

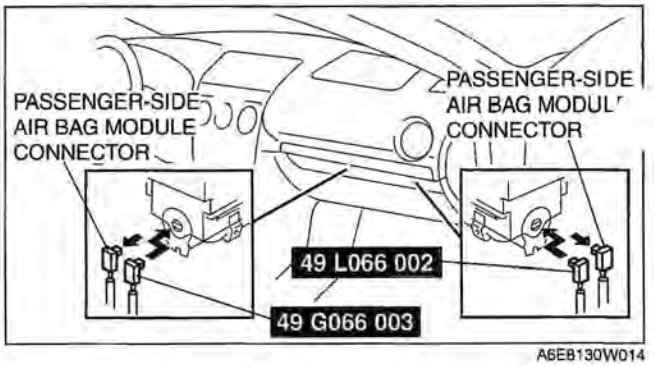

A6EB130W014

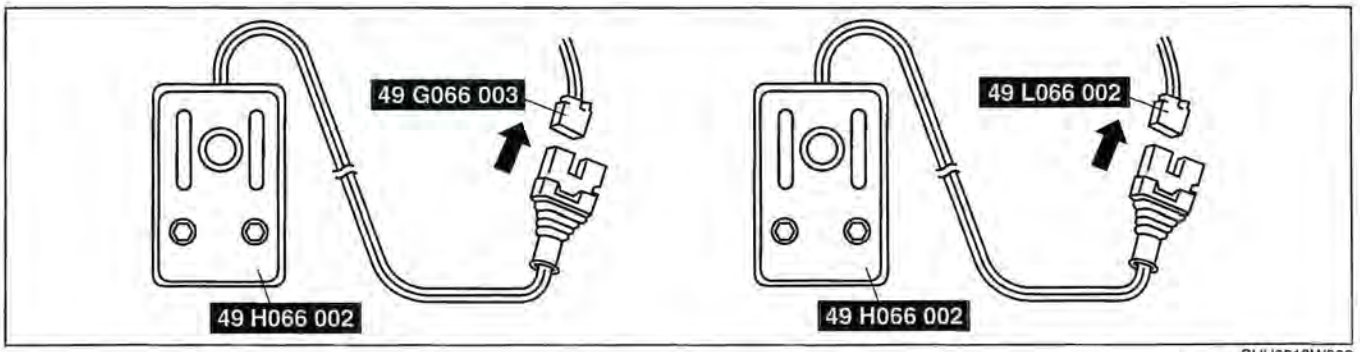

CHU0810W302

5. Connect both **SSTs** (Deployment tool) to the battery. Connect the power supply red clip to the positive battery terminal, and the black clip to the negative battery terminal.
6. Verify that the red lamp on both **SSTs** (Deployment tool) is illuminated.
7. Make sure all persons are standing **at least 6 m {20 ft}** away from the vehicle.
8. Press the activation switch on the **SST** (Deployment tool) connected with 49 L066 002 (a yellow connector) of the **SST** (Adapter harness), and **after 3 s**, press the activation switch on the other **SST** (Deployment tool) to operate (deploy) the air bag module (both inflators).

Warning

- **Verify that air bag module operation (explosive) sound occurs twice. If no operation (explosive) sound was heard or a single operation (explosive) sound was heard, both inflators would not have operated (deployed) properly. This may cause serious injury because the air bag module may operate (deploy) accidentally. If the two operation (explosive) sounds are not heard, perform Step 8 again. In case that the two operation (explosive) sounds in total are not verified even though Step 8 is performed again, leave the air bag module alone for 30 min or more before getting near it again.**
- **The air bag module is very hot immediately after it is operated (deployed). You can be burned. Do not touch the air bag module tor at least 15 min after deployment.**

9. Disconnect the **SST** (Deployment tool) from the **SST** (Adapter harness).
10. Connect the **SST** (Deployment tool) to the **SST** (Adapter harness).
11. Perform Steps 5 through 8, in order to deploy the passenger-side air bag module.

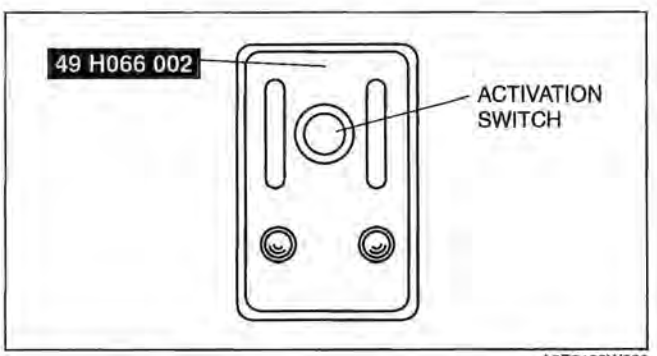

A6E8130W028

Side air bag module

1. Disconnect the side air bag module connector.
2. Connect the **SST** (Adapter harness) to the side air bag module.

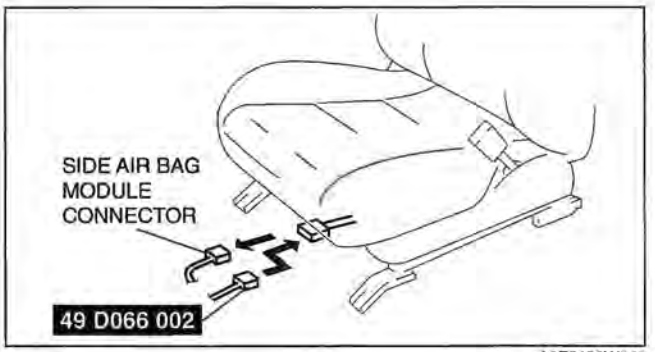

A6EB130W029

3. Connect the **SST** (Deployment tool) to the **SST** (Adapter harness).
4. Connect the red clip of the **SST** (Deployment tool) to the positive battery terminal and the black clip to the negative battery terminal.
5. Verify that the red light on the **SST** (Deployment tool) is illuminated.
6. Make sure all persons are standing **at least 6 m {20 ft}** from the vehicle.

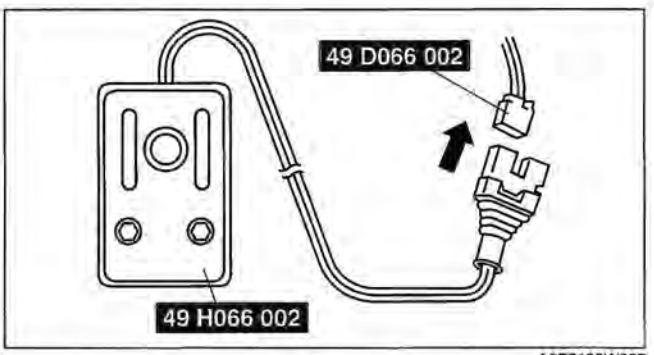

A6EB130W027

7. Press the activation switch on the **SST** (Deployment tool) to deploy the side air bag module.

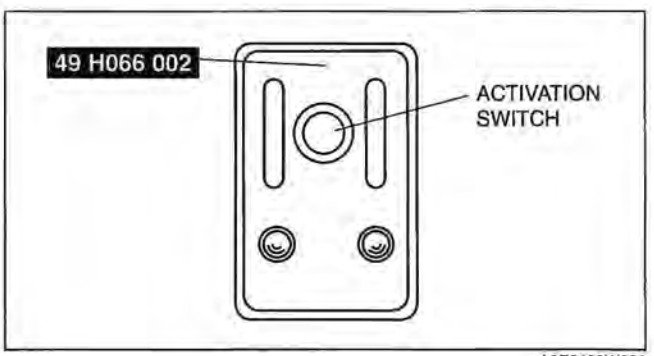

A6EB130W028

Curtain air bag module (sport sedan)

1. Remove the tire house trim. (See 09–17–15 TIRE HOUSE TRIM REMOVAL/INSTALLATION.)
2. Disconnect the curtain air bag module connector.
3. Connect the **SST** (Adapter harness) to the curtain air bag module.

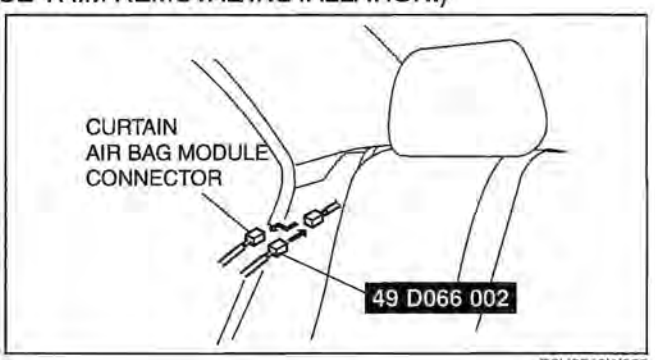

B6U0810W003

4. Connect the **SST** (Deployment tool) to the **SST** (Adapter harness).
5. Connect the red clip of the **SST** (Deployment tool) to the positive battery terminal and the black clip to the negative battery terminal.
6. Verify that the red light on the **SST** (Deployment tool) is illuminated.
7. Make sure all persons are standing **at least 6 m {20 ft}** from the vehicle.

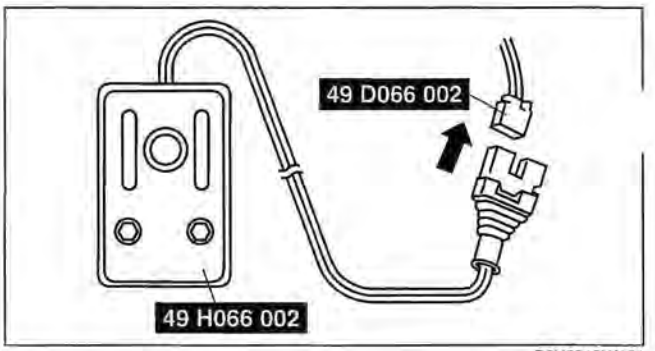

B6U0810W101

8. Press the activation switch on the **SST** (Deployment tool) to deploy the curtain air bag module.

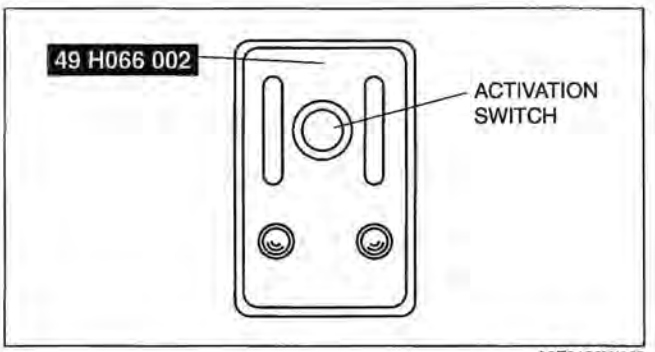

A6E8130W028

Curtain air bag module (5-door, sport wagon)

1. Remove the trunk side trim. (5-Door) (See 09–17–17 TRUNK SIDE TRIM REMOVAL/INSTALLATION.)
2. Remove the headliner. (Sport Wagon) (See 09–17–24 HEADLINER REMOVAL/INSTALLATION.)
3. Disconnect the curtain air bag module connector.

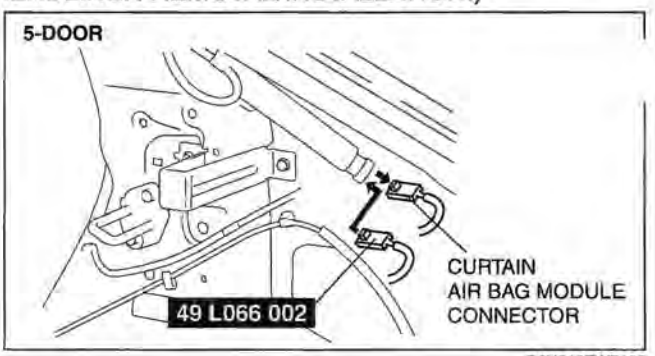

D6U810ZW7102

4. Connect the **SST** (Adapter harness) to the curtain air bag module.

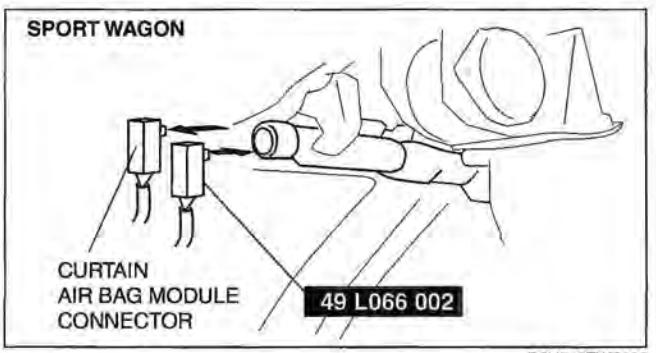

D6U810ZW7103

5. Connect the **SST** (Deployment tool) to the **SST** (Adapter harness).
6. Connect the red clip of the **SST** (Deployment tool) to the positive battery terminal and the black clip to the negative battery terminal.
7. Verify that the red light on the **SST** (Deployment tool) is illuminated.
8. Make sure all persons are standing **at least 6 m {20 ft}** from the vehicle.

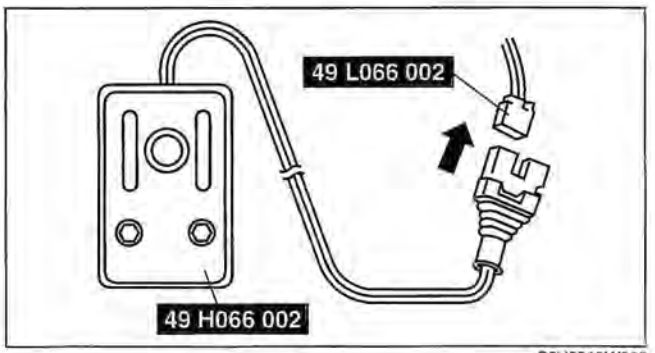

C6U0810W005

9. Press the activation switch on the **SST** (Deployment tool) to deploy the curtain air bag module.

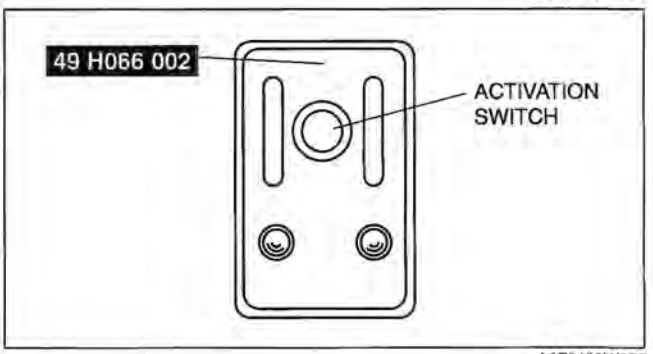

A6E8130W028

Pre-tensioner seat belt

1. Remove the B-pillar lower trim. (See 09–17–10 B-PILLAR LOWER TRIM REMOVAL/INSTALLATION.)
2. Remove the pre-tensioner seat belt and connect the **SST** (Adapter harness) to it as shown in the figure. (See 08–11–3 FRONT SEAT BELT REMOVAL/INSTALLATION.)
   Install the pre-tensioner seat belt.

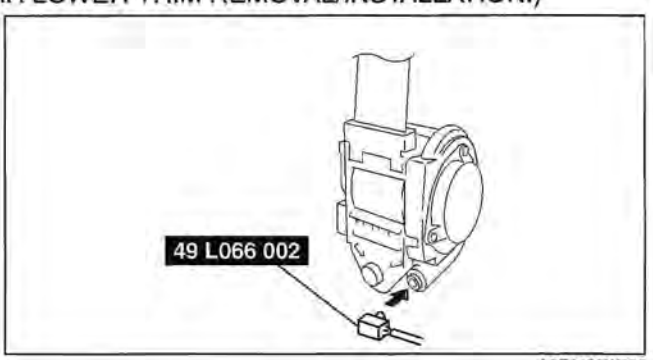

A6E8130W030

4. Connect the **SST** (Deployment tool) to the **SST** (Adapter harness).
5. Connect the red clip of the **SST** (Deployment tool) to the positive battery terminal and the black clip to the negative battery terminal.
6. Verify that the red light on the **SST** (Deployment tool) is illuminated.
7. Make sure all persons are standing **at least 6 m {20 ft}** from the vehicle.

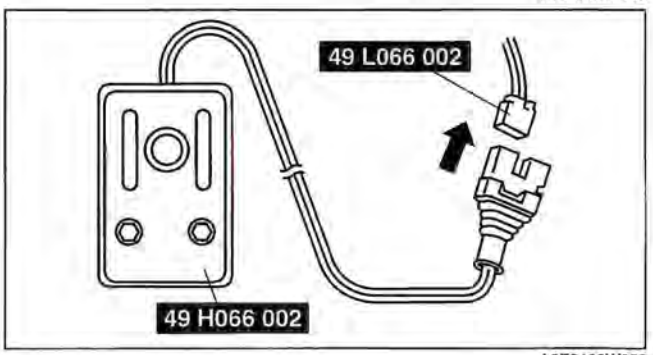

A6E8130W052

8. Press the activation switch on the **SST** (Deployment tool) to deploy the pre-tensioner seat belt.

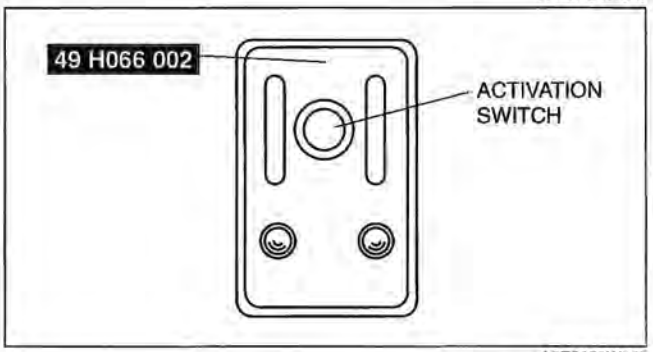

A6E8130W028

Deployment Procedure for Outside of Vehicle

1. Inspect the **SST** (Deployment tool). (See 08–10–34 INSPECTION OF SST (DEPLOYMENT TOOL).)
2. Turn the ignition switch to the LOCK position.
3. Disconnect the negative battery cable and wait for **1 min or more.**
4. Follow the appropriate procedure for deploying the driver-side air bag module, passenger-side air bag modui side air bag module, curtain air bag module, or pre-tensioner seat belt.

Driver-side air bag module

Warning

- **The driver-side air bag module is a dual inflator type. If one inflator is forced to operate (deploy), the other may operate (deploy) accidentally. To prevent injury while disposing of the air bag module, make sure to operate (deploy) both driver-side air bag module inflators simultaneously, following the procedure below.**

1. Remove the driver-side air bag module. (See 08–10–6 DRIVER-SIDE AIR BAG MODULE REMOVAL/ INSTALLATION.)
2. Connect the **SST** (Adapter harness) to the driver-side air bag module as shown in the figure,

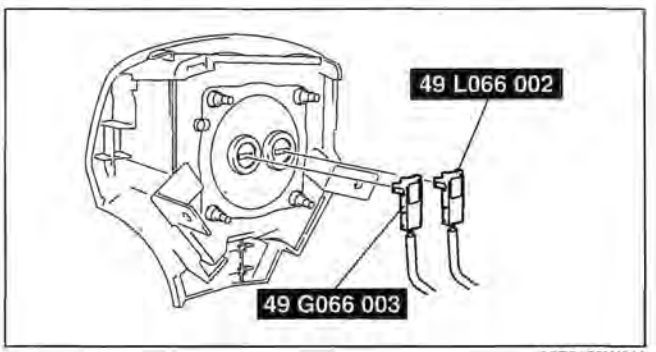

A6E8130W011

3. Place the driver-side air bag module on the center of the tire wheel with the module facing up. To secure the air bag module to the tire wheel, wrap the wire through the wheel and around the bolt installation hole **at least 4 times**.

Warning

- **If the air bag module is not properly installed to the tire wheel, serious injury may occur when the module is deployed. When installing the air bag module to the tire wheel, make sure the module is facing up.**

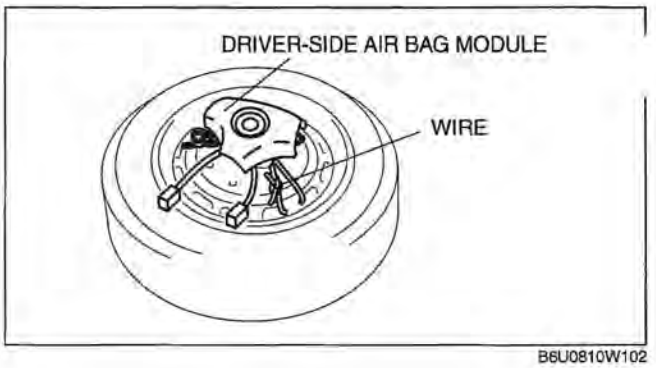

B6U0810W102

4. Stack three tires on top of the tire with the air bag module. Stack another tire that has a wheel on top of the four tires.

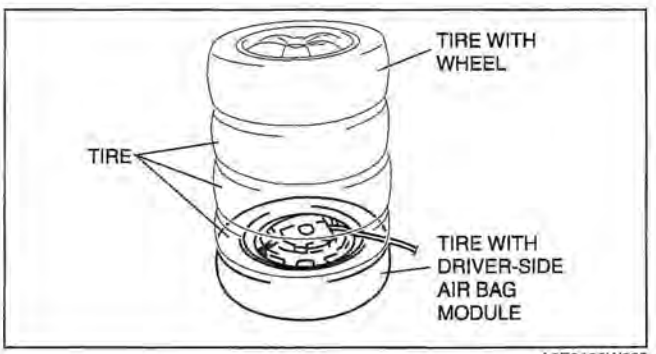

A6E8130W033

5. Tie all tires together with wire.

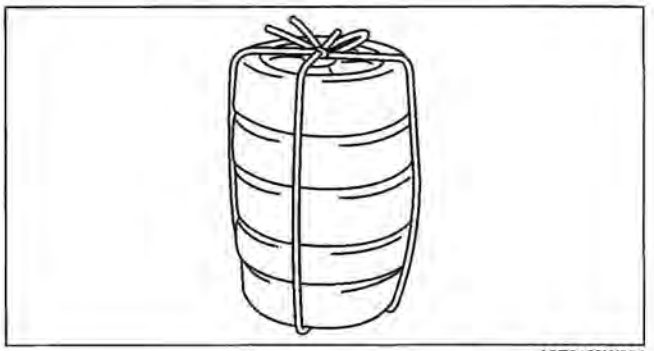

A6E8130W034

6. Connect the **SST** (Deployment tool) to the **SST** (Adapter harness).
7. Connect both **SSTs** (Deployment tool) to the battery. Connect the power supply red clip to the positive battery terminal, and the black clip to the negative battery terminal.
8. Verify that the red lamp on both **SSTs** (Deployment tool) is illuminated.
9. Make sure all persons are standing **at least 6 m {20 ft}** away from the vehicle.

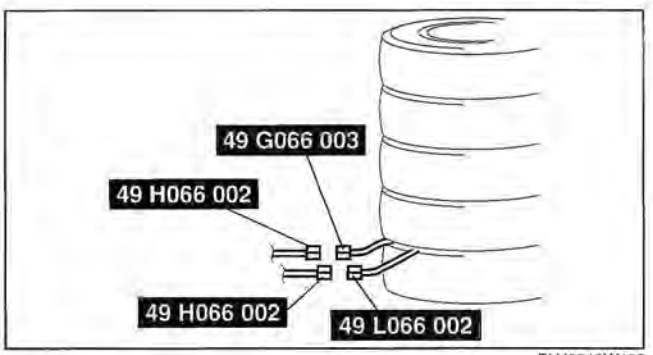

BHJ0810W106

10. Press the activation switch on the **SST** (Deployment tool) connected with 49 L066 002 (a yellow connector) of the **SST** (Adapter harness), and **after 3 s**, press the activation switch on the other **SST** (Deployment tool) to operate (deploy) the air bag module (both inflators).

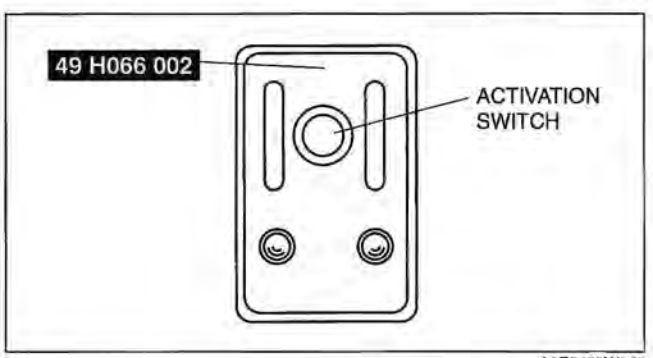

A6E8130W028

Warning

- **Verify that air bag module operation (explosive) sound occurs twice. If no operation (explosive) sound was heard or a single operation (explosive) sound was heard, both inflators would not have operated (deployed) properly. This may cause serious injury because the air bag module may operate (deploy) accidentally. If the two operation (explosive) sounds are not heard, perform Step 10 again. In case that the two operation (explosive) sounds in total are not verified even through Step 10 is performed again, leave the air bag module alone for 30 min or more before getting near it again.**
- **The air bag module is very hot immediately after it is operated (deployed). You can be burned. Do not touch the air bag module for at least 15 min after deployment.**

11. Disconnect the **SST** (Deployment tool) from the **SST** (Adapter harness).

Passenger-side air bag module

Warning

- **The passenger-side air bag module is a dual inflator type. If one inflator is forced to operate (deploy), the other may operate (deploy) accidentally. To prevent injury while disposing of the air bag module, make sure to operate (deploy) both passenger-side air bag module inflators simultaneously, following the procedure below.**

1. Remove the passenger-side air bag module. (See 08–10–7 PASSENGER-SIDE AIR BAG MODULE REMOVAL/INSTALLATION.)

2. Install the bolts to the passenger-side air bag module.

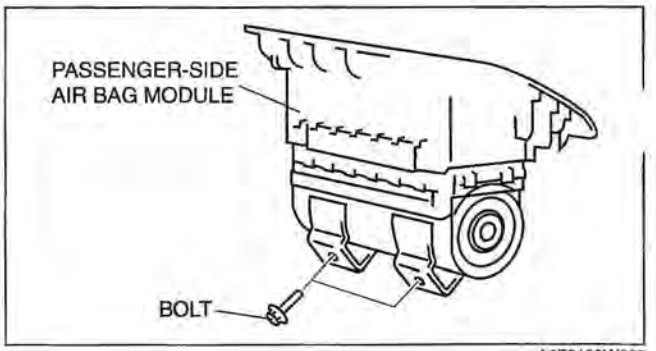

A6E8130W035

3. Connect the **SST** (Adapter harness) to the passenger-side air bag module as shown in the figure.

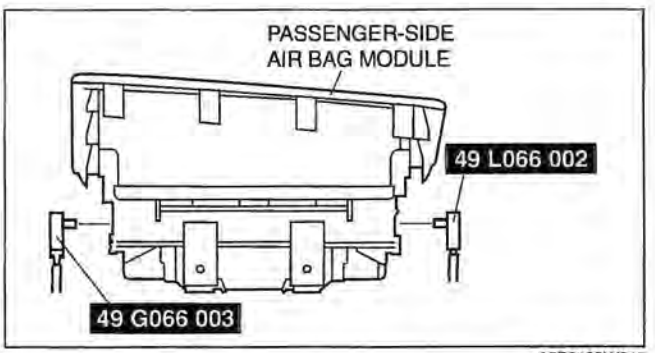

A6E8130W015

4. Tie the passenger-side air bag module to the tire with the module facing the center of the tire. Wrap the wire through the tire and around the bolts **at least 4 times**.

Warning

- **If the air bag module is not properly installed to the tire, serious injury may occur when the module is deployed, When installing the air bag module to the tire, make sure the module is facing the center of the tire.**

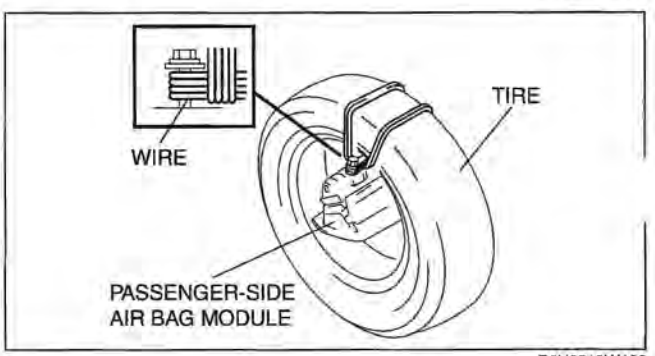

B6U0810W103

5. Stack the tire with the passenger-side air bag module on top of two tires. Stack another tire that has a wheel on top of the four tires.

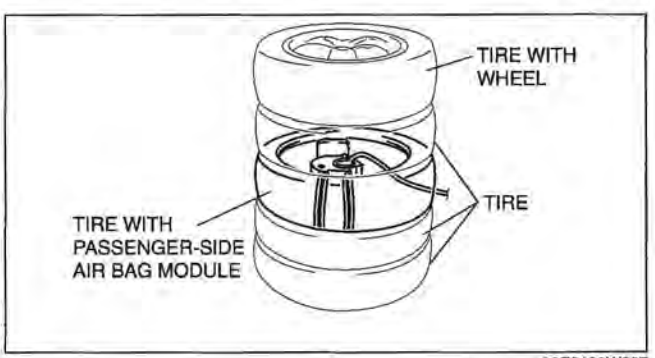

A6E8130W037

6. Tie all tires together with wire.

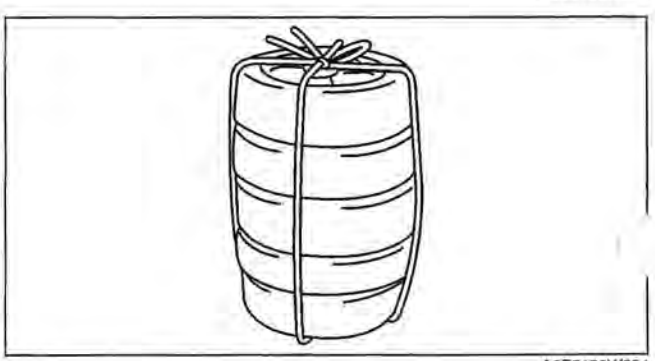
A6E8130W034

7. Connect the **SST** (Deployment tool) to the **SST** (Adapter harness).
8. Connect both **SSTs** (Deployment tool) to the battery. Connect the power supply red clip to the positive battery terminal, and the black clip to the negative battery terminal.
9. Verify that the red lamp on the **SSTs** (Deployment tool) is illuminated.
10. Make sure all persons are standing **at least 6 m {20 ft}** away from the vehicle.

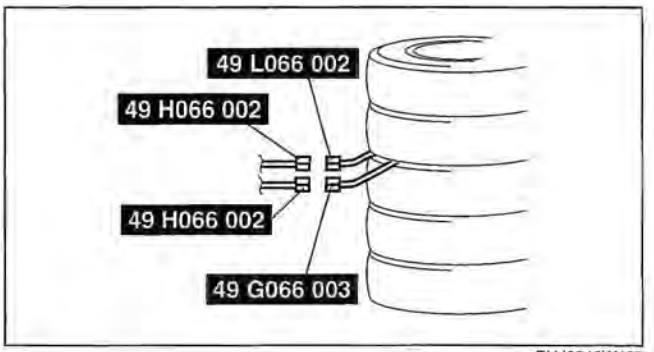

BHJ0810W107

11. Press the activation switch on the **SST** (Deployment tool) connected with 49 L066 002 (a yellow connector) of the **SST** (Adapter harness), and **after 3s**, press the activation switch on the other **SST** (Deployment tool) to operate (deploy) the air bag module (both inflators).

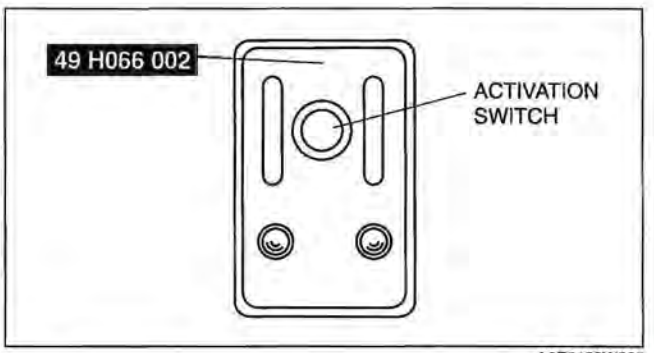

A6EB130W028

Warning

- **Verify that air bag module operation (explosive) sound occurs twice. If no operation (explosive) sound was heard or a single operation (explosive) sound was heard, both inflators would not have operated (deployed) properly. This may cause serious injury because the air bag module may operate (deploy) accidentally. If the two operation (explosive) sounds are not heard, perform Step 11 again. In case that the two operation (explosive) sounds in total are not verified even though Step 11 is performed again, leave the air bag module alone for 30 min or more before getting near it again.**
- **The air bag module is very hot immediately after it is operated (deployed). You can be burned. Do not touch the air bag module for at least 15 min after deployment.**

12. Disconnect the **SST** (Deployment tool) from the **SST** (Adapter harness).
13. Connect the **SST** (Deployment tool) to the **SST** (Adapter harness).
14. Perform Steps 8 through 11, in order to deploy the passenger-side air bag module.

Side air bag module

1. Remove the side air bag module. (See 08–10–8 SIDE AIR BAG MODULE REMOVAL/INSTALLATION.)
2. Connect the **SST** (Adapter harness) to the side air bag module as shown in the figure.

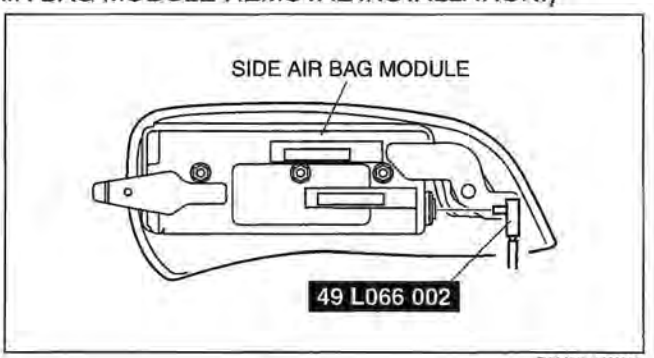

B6U0810W108

3. Tie the side air bag module to the tire with the module facing the center of the tire. Wrap the wire through the tire and around the bracket **at least 4 times**.

   Warning
   - **If the air bag module is not properly installed to the tire, serious injury may occur when the module is deployed. When installing the air bag module to the tire, make sure the module is facing the center of the tire.**

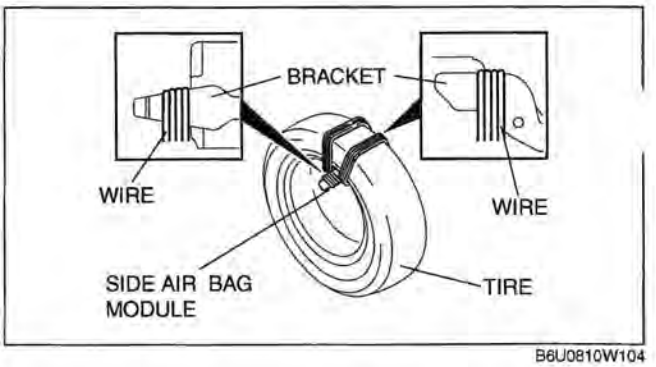

B6U0810W104

4. Stack the tire with the side air bag module on top of two tires. Stack a tire on top of three tires. Stack another tire that has a wheel on top of the four tires.

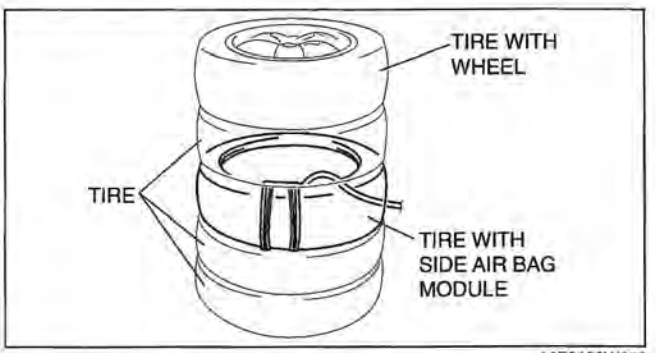

A6E8130W053

5. Tie all tires together with wire.

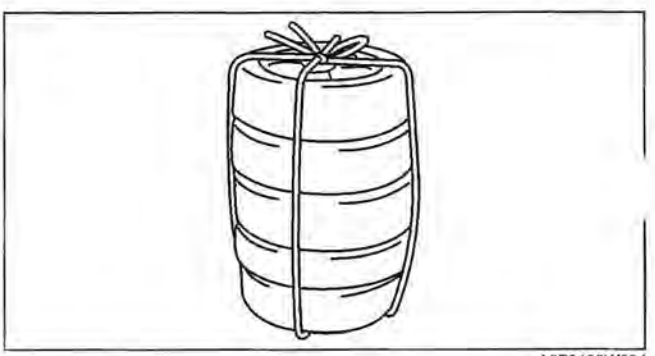
A6E8130W034

6. Connect the **SST** (Deployment tool) to the **SST** (Adapter harness).
7. Connect the red clip of the **SST** (Deployment tool) to the positive battery terminal and the black clip to the negative battery terminal.
8. Verify that the red light on the **SST** (Deployment tool) is illuminated.
9. Make sure all persons are standing **at least 6 m {20 ft}** from the vehicle.

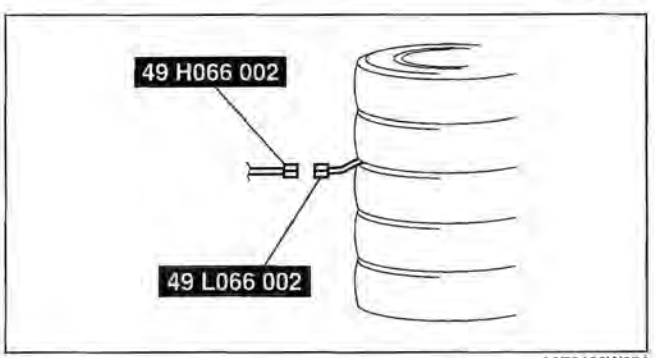

A6E8130W054

10. Press the activation switch on the **SST** (Deployment tool) to deploy the side air bag module.

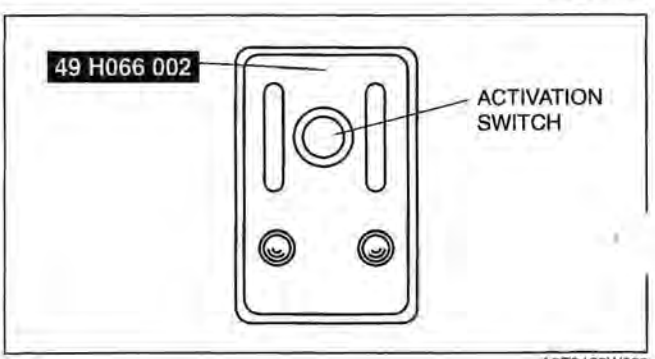

A6E8130W028

Curtain air bag module (sport sedan)

1. Remove the curtain air bag module. (See 08–10–10 CURTAIN AIR BAG MODULE REMOVAL/ INSTALLATION.)
2. Secure the curtain air bag module in a vise, and cut off the deployment section, as shown in the figure.

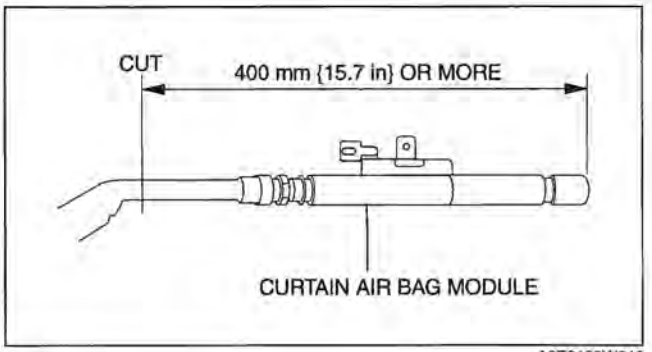

A6E8130W013

Warning

- **Be sure not to collapse the pipe on the side where it is cut. If it is collapsed, the interior pressure of the pipe will build up and can cause it to explode during air bag module deployment.**

3. Tie the side air bag module to the tire with the module facing the center of the tire. Wrap the wire through the tire and around the bracket **at least 4 times**.

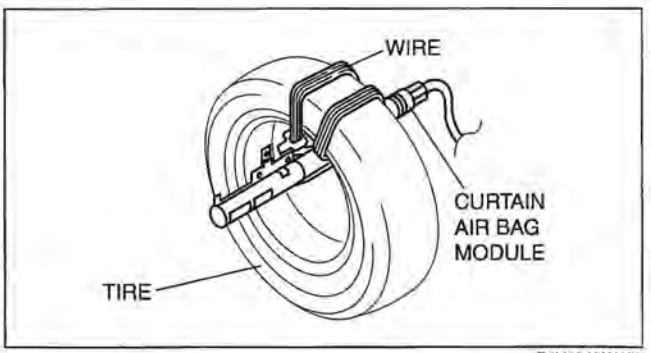

B6U0810W105

Warning

- **If the air bag module is not properly installed to the tire, serious injury may occur when the module is deployed. When installing the air bag module to the tire, make sure the module is facing the downward.**

4. Connect the **SST** (Adapter harness) to the curtain air bag module as shown in the figure.

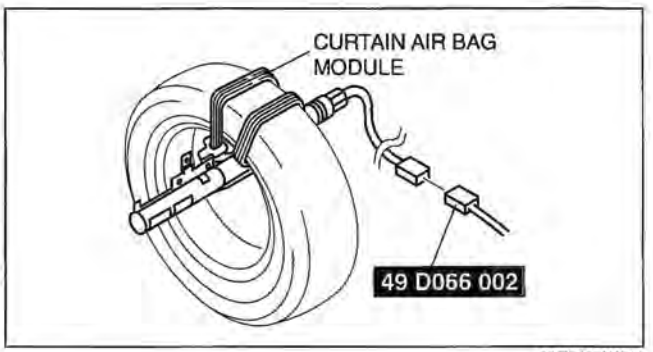

A6E8130W019

5. Stack the tire with the curtain air bag module on top of two tires. Stack a tire on top of three tires. Stack another tire that has a wheel on top of the four tires.

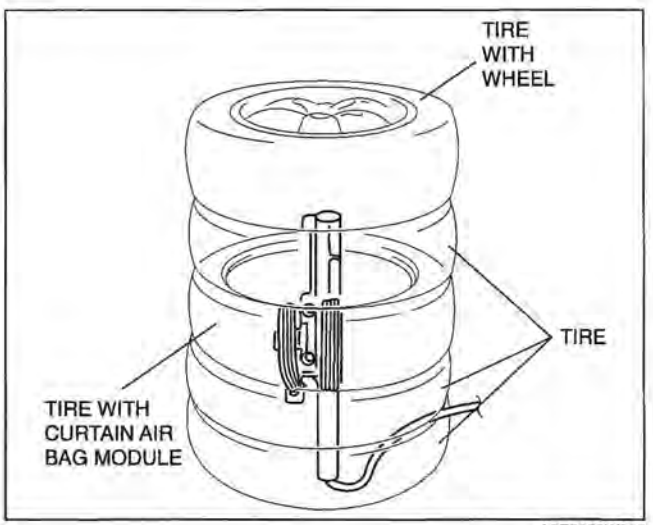

A6E8130W020

6. Tie all tires together with wire.

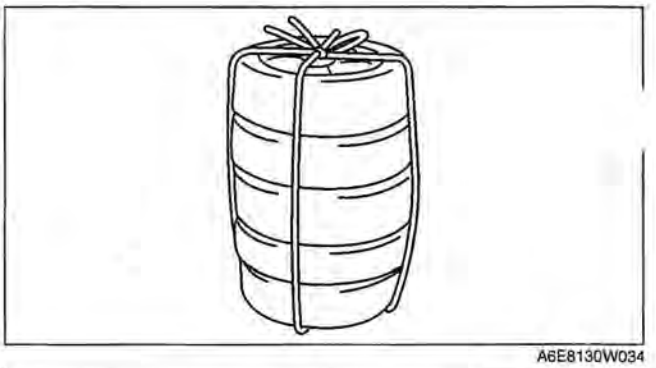
A6E8130W034

7. Connect the **SST** (Deployment tool) to the **SST** (Adapter harness).
8. Connect the red clip of the **SST** (Deployment tool) to the positive battery terminal and the black clip to the negative battery terminal.
9. Verify that the red light on the **SST** (Deployment tool) is illuminated.
10. Make sure all persons are standing **at least 6 m {20 ft}** from the vehicle.

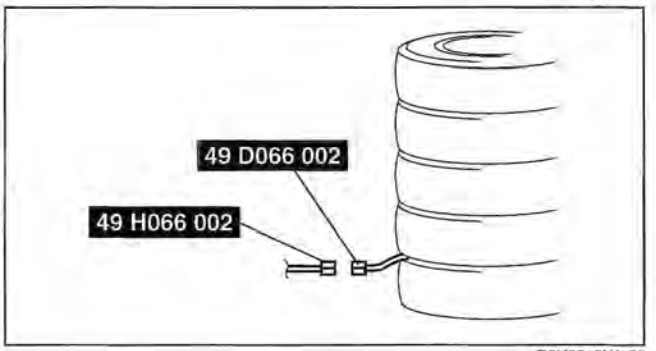

B6U0810W106

11. Press the activation switch on the **SST** (Deployment tool) to deploy the curtain air bag module.

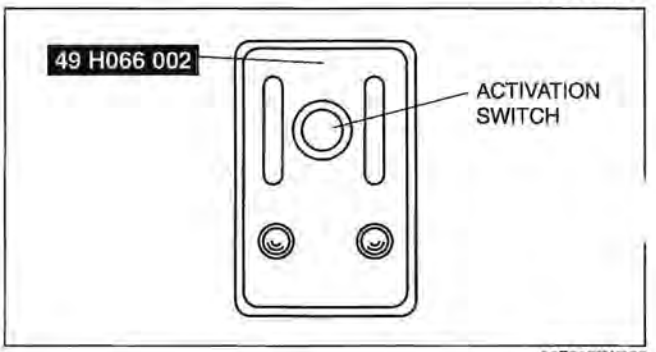

A6E8130W028

Curtain air bag module (5-door, sport wagon)

1. Remove the curtain air bag module. (See 08–10–10 CURTAIN AIR BAG MODULE REMOVAL/ INSTALLATION.)
2. Secure the curtain air bag module in a vise, and cut off the deployment section, as shown in the figure.

Warning

- **Be sure not to collapse the pipe on the side where it is cut. If it is collapsed, the interior pressure of the pipe will build up and can cause it to explode during air bag module deployment.**

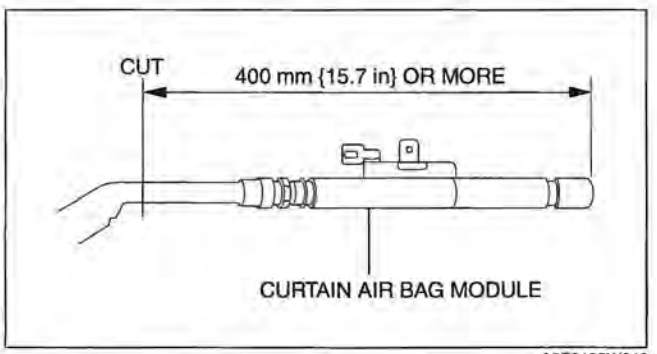

A6E8130W013

3. Connect the **SST** (Adapter harness) to the curtain air bag module as shown in the figure.

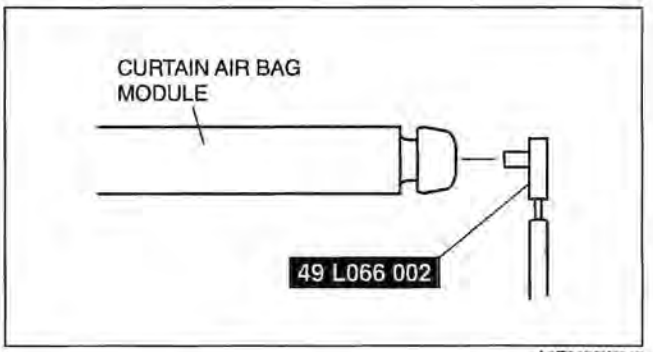

A6E8130W040

4. Tie the side air bag module to the tire with the module facing the center of the tire. Wrap the wire harness through the tire and around the bracket **at least 4 times**.

Warning

- **If the air bag module is not properly installed to the tire, serious injury may occur when the module is deployed. When installing the air bag module to the tire, make sure the module is facing the downward.**

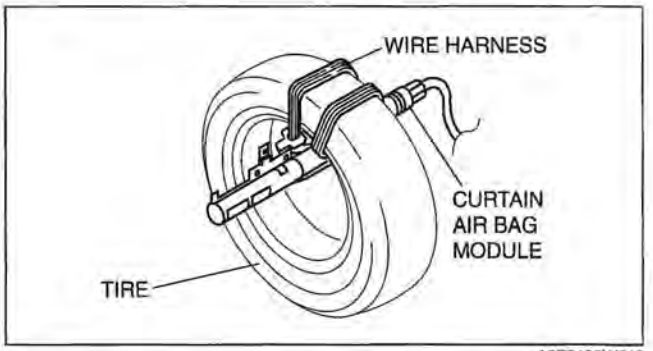

A6E8130W018

5. Stack the tire with the curtain air bag module on top of two tires. Stack a tire on top of three tires. Stack another tire that has a wheel on top of the four tires.

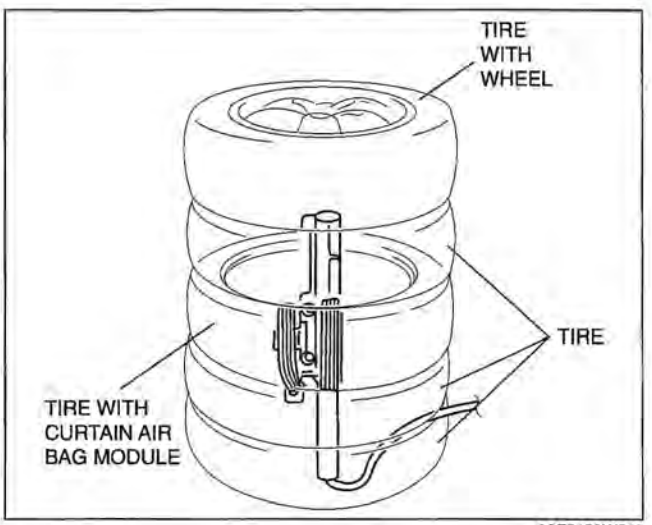

A6E8130W020

6. Tie all tires together with wire.

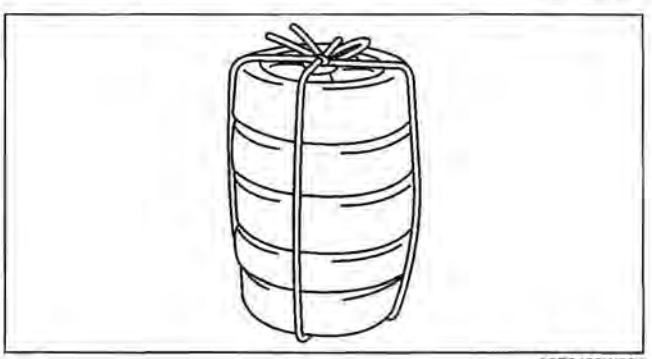

A6E8130W034

7. Connect the **SST** (Deployment tool) to the **SST** (Adapter harness).
8. Connect the red clip of the **SST** (Deployment tool) to the positive battery terminal and the black clip to the negative battery terminal.
9. Verify that the red light on the **SST** (Deployment tool) is illuminated.
10. Make sure all persons are standing **at least 6 m {20 ft}** from the vehicle.

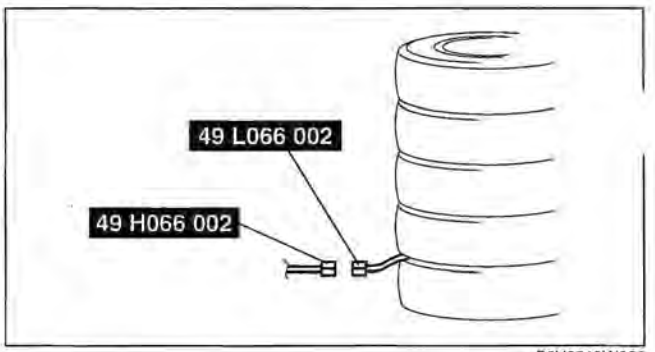

C6U0810W006

11. Press the activation switch on the **SST** (Deployment tool) to deploy the curtain air bag module.

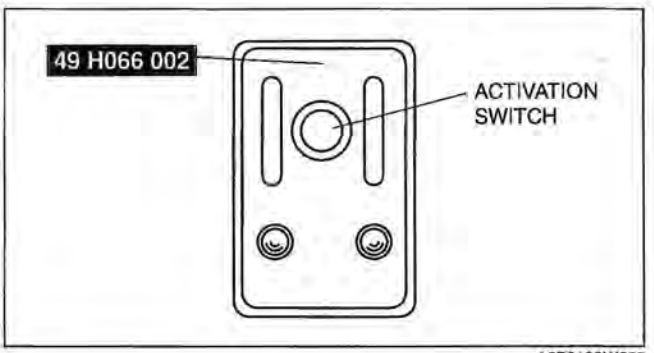

A6E8130W028

Pre-tensioner seat belt

1. Remove the pre-tensioner seat belt. (See 08–11–3 FRONT SEAT BELT REMOVAL/INSTALLATION.)

Warning

- **If the pre-tensioner seat belt is not properly installed to the tire, serious injury may occur when th pre-tensioner part is deployed. When installing the pre-tensioner seat belt to the tire, make sure the pre-tensioner part is inside the tire.**

2. Connect the **SST** (Adapter harness) to the pre-tensioner seat belt as shown in the figure.

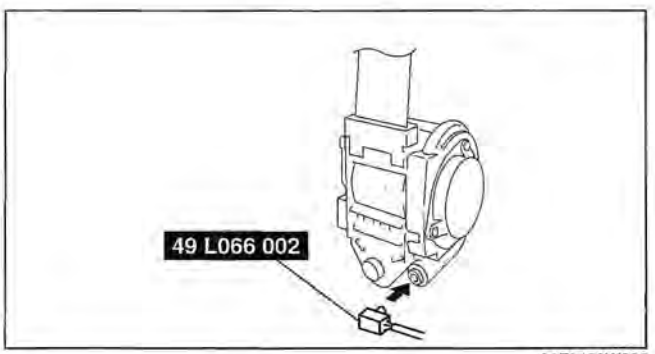

A6E8130W030

3. With the pre-tensioner part inside the tire, tie the pre-tensioner seat belt to the tire. Wrap the wire through the tire and around the pre-tensioner seat belt **at least 4 times**.

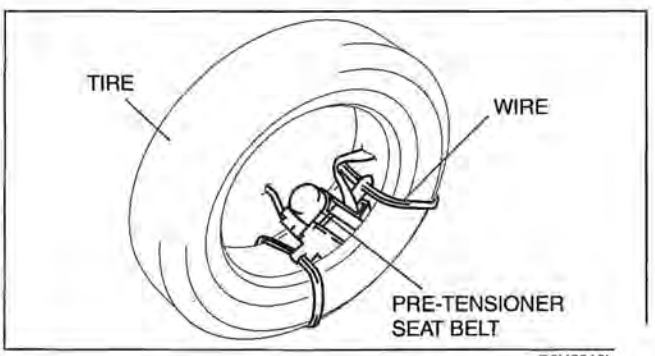

B6U0810V

4. Stack the tire with the pre-tensioner seat belt on top of two tires. Stack a tire on top of the three tires. Stack another tire that has a wheel on top of the four tires.

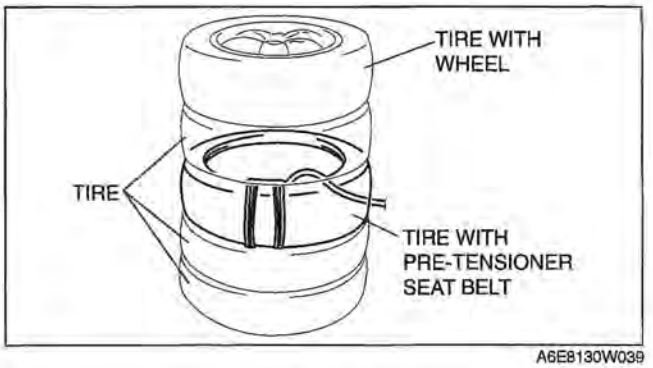

A6E8130W039

5. Tie all tires together with wire.

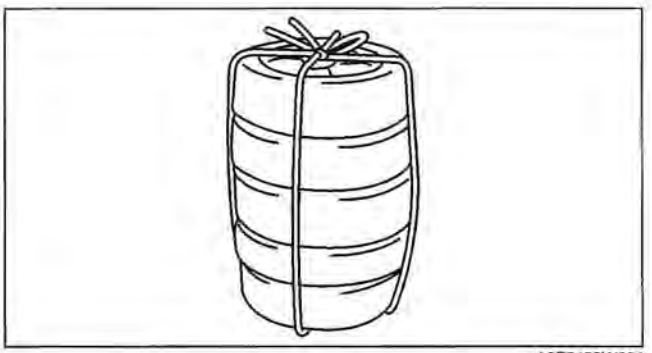
A6E8130W034

6. Connect the **SST** (Deployment tool) to the **SST** (Adapter harness).
7. Connect the red clip of the **SST** (Deployment tool) to the positive battery terminal and the black clip to the negative battery terminal.
8. Verify that the red light on the **SST** (Deployment tool) is illuminated.
9. Make sure all persons are standing **at least 6 m {20 ft}** from the vehicle.

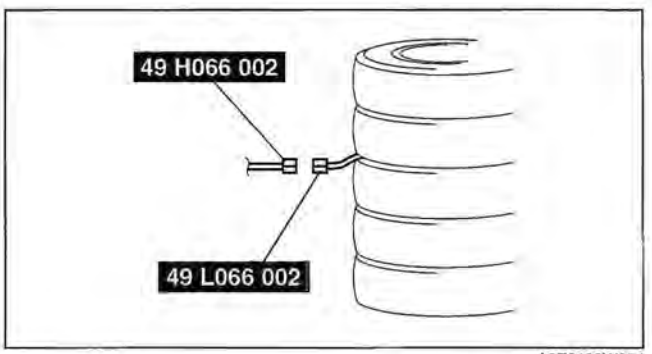

A6E8130W054

10. Press the activation switch on the **SST** (Deployment tool) to deploy the pre-tensioner seat belt.

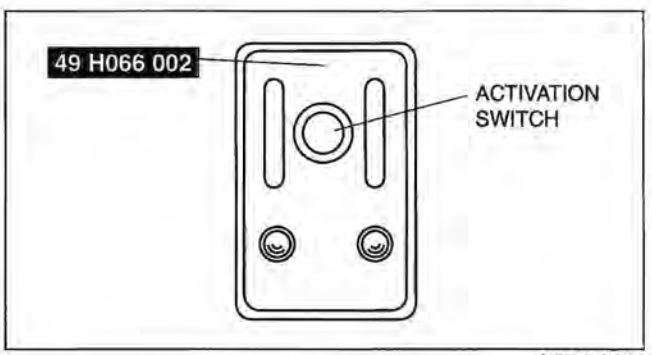

A6E8130W028

AIR BAG MODULE AND PRE-TENSIONER SEAT BELT DISPOSAL PROCEDURES

E6U081057000W02

Warning

- **A live (undeployed) air bag module or pre-tensioner seat belt may accidentally operate (deploy) when it is disposed of and cause serious injury. Always refer to the "AIR BAG MODULE AND PR TENSIONER SEAT BELT DEPLOYMENT PROCEDURES" and dispose of air bag modules and pre-tensioner seat belts in a deployed condition.**
- **The air bag modules and the pre-tensioner seat belts are very hot immediately after they are deployed. You can be burned. Do not touch an air bag module and pre-tensioner seat belt for at least 15 min after deployment.**
- **Pouring water on the deployed air bag module and pre-tensioner seat belt is dangerous. The water will mix with the residual gases to form a gas that can make breathing difficult. Do not pour water on the deployed air bag module and pre-tensioner seat belt.**
- **The deployed air bag module or pre-tensioner seat belt may contain deposits of sodium hydroxide, a caustic byproduct of the gas-generated combustion. If this substance gets into your eyes or on your hands, it can cause irritation and itching. When handling the deployed air bag module and pre-tensioner seat belt, wear gloves and safety glasses.**
- **Due to the adoption of 2-step deployment control in both the driver and passenger-side air bag modules, depending on the impact force, it is possible that inflator No.2 might not operate (deploy). Before disposing of the air bag module, always follow the inflator deployment procedures and verify the complete operation (deployment) of inflators No.1 and 2.**

1. Remove the deployed air bag module or pre-tensioner seat belt.
2. Put the air bag module or pre-tensioner seat belt in a plastic bag, seal the bag, and then dispose of it.

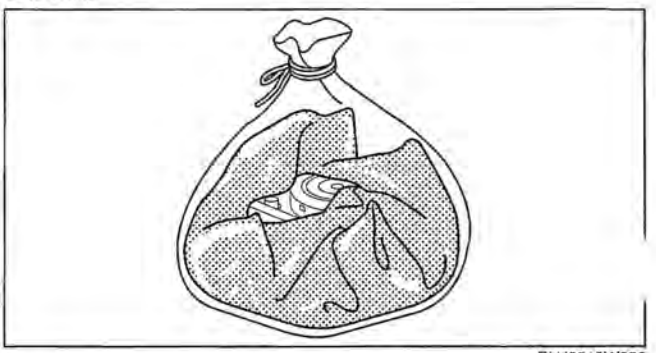

BHJ0810W023

INSPECTION OF SST (DEPLOYMENT TOOL)

1. Before using the **SST** (49 H066 002), inspect its operation.

E6U081001078W01

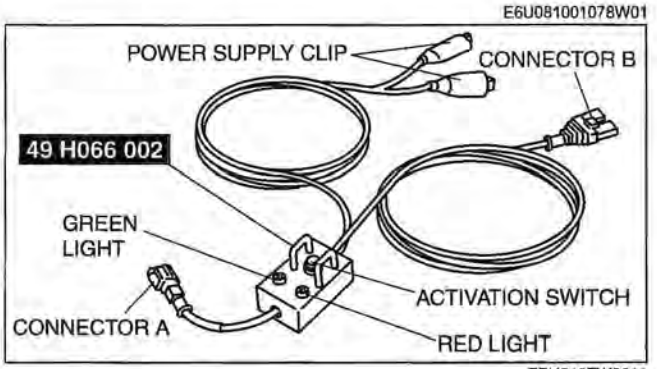

EPU810ZW3011

Inspection Procedure

1. Follow the steps below to inspect the **SST** (49 H066 002).
   - If not as indicated in the table, replace the **SST** (49 H066 002) because it has a malfunction.

Warning

- **Do not use a malfunctioning SST (49 H066 002), otherwise it could cause the air bag module or pre-tensioner seat belt to accidentally operate (deploy).**

Caution

- **Because the permissible voltage for the SST (49 H066 002) is 12 V, do not connect a 24 V power source because it will damage the SST. Always connect only a 12 V power source.**

Step	Inspection procedure	Light condition	
		Green	Red
1	Connect the power supply red clip to the positive battery terminal, and the black clip to the negative battery terminal.	On	Off
2	Connect connectors A and B.	Off	On
3	Press the activation switch.	On	Off

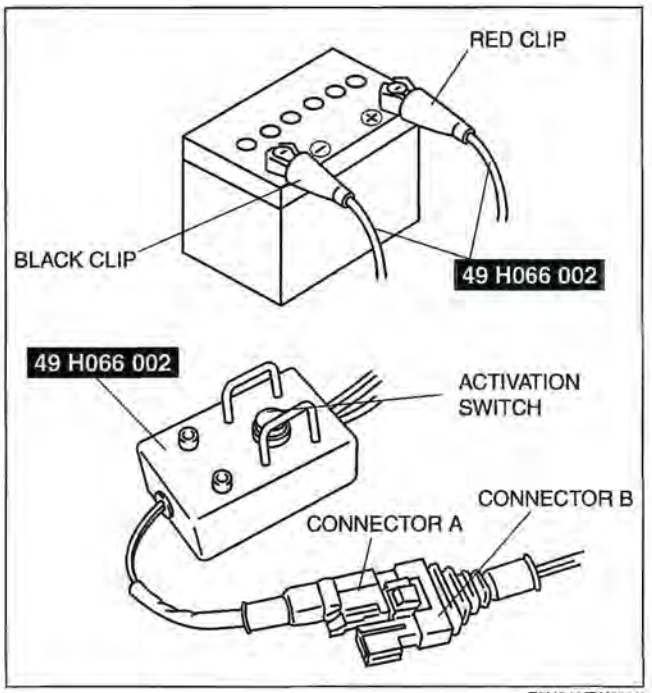

E5U810ZW5050

08–11 SEAT BELT

SEAT BELT LOCATION INDEX 08–11–2
FRONT SEAT BELT
REMOVAL/INSTALLATION 08–11–3
Pre-tensioner Seat Belt Connector
Removal Note 08–11–4
REAR SIDE SEAT BELT
REMOVAL/INSTALLATION 08–11–4
Sport Sedan 08–11–4
5-Door, Sport Wagon 08–11–4
REAR CENTER SEAT BELT
REMOVAL/INSTALLATION 08–11–5
Sport Sedan 08–11–5
5-Door 08–11–5
Sport Wagon 08–11–5
FRONT BUCKLE
REMOVAL/INSTALLATION 08–11–6
REAR BUCKLE
REMOVAL/INSTALLATION 08–11–6
SEAT BELT INSPECTION 08–11–7
Belt 08–11–7
ELR 08–11–7
ALR 08–11–7
Load Limiter Retractor 08–11–7
BUCKLE SWITCH INSPECTION 08–11–8
CHILD-RESTRAINT SEAT ANCHOR
REMOVAL/INSTALLATION 08–11–8
Sport Sedan 08–11–8
5-Door, Sport Wagon 08–11–8

SEAT BELT LOCATION INDEX

E6U081157000W01

SPORT SEDAN

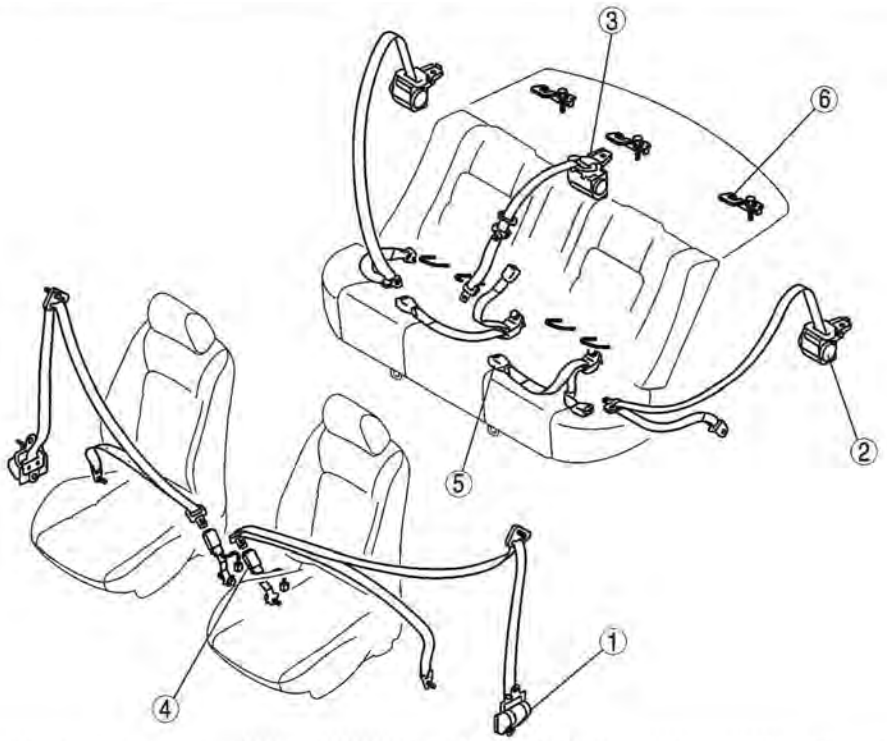

5-DOOR

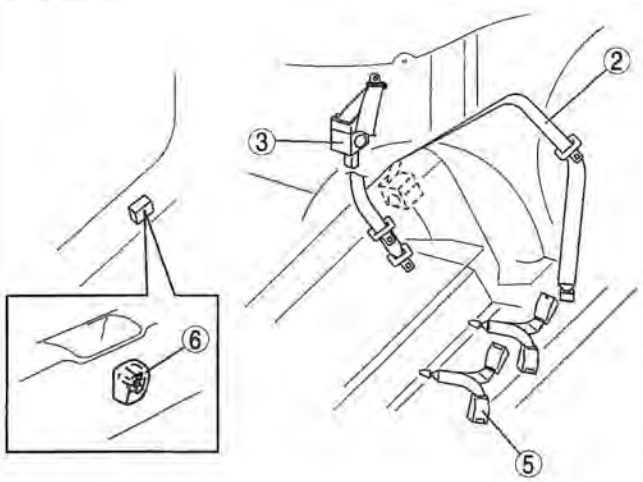

SPORT WAGON

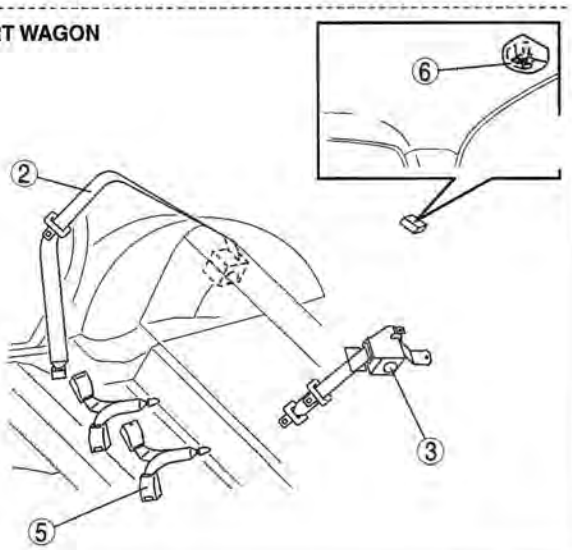

E6U811ZW5101

1	Front seat belt (See 08–11–3 FRONT SEAT BELT REMOVAL/ INSTALLATION.) (See 08–11–7 SEAT BELT INSPECTION)
2	Rear side seat belt (See 08–11–4 REAR SIDE SEAT BELT REMOVAL/ INSTALLATION.) (See 08–11–7 SEAT BELT INSPECTION.)
3	Rear center seat belt (See 08–11–5 REAR CENTER SEAT BELT REMOVAL/INSTALLATION.) (See 08–11–7 SEAT BELT INSPECTION.)

4	Front buckle (See 08–11–6 FRONT BUCKLE REMOVAL/ INSTALLATION.)
5	Rear buckle (See 08–11–6 REAR BUCKLE REMOVAL/ INSTALLATION.)
6	Child-restraint seat anchor (See 08–11–8 CHILD-RESTRAINT SEAT ANCHOR REMOVAL/INSTALLATION.)

FRONT SEAT BELT REMOVAL/INSTALLATION

E6U081157630W01

Warning

- **Handling the air bag system components improperly can accidentally operate (deploy) the air bag modules and pre-tensioner seat belts, which may seriously injure you. Read the service warnings and cautions before handling the air bag system components. (See 08–10–3 SERVICE WARNINGS.)(See 08–10–5 SERVICE CAUTIONS.)**
- **The side air bag sensor is attached to the lower part of the B-pillar. When working around the B-pillar, disconnect the negative battery cable or work carefully, avoiding excessive impact to the lower part of the B-pillar.**

Caution

- **The ELR has a spring that will unwind if the retractor cover is removed. The spring cannot be rewound by hand. If this occurs, the ELR will not work properly. Therefore, do not disassemble the retractor.**

1. Turn the ignition switch to the LOCK position.
2. Disconnect the negative battery cable and wait for **1 min or more.**
3. Remove the B-pillar lower trim. (See 09–17–10 B-PILLAR LOWER TRIM REMOVAL/INSTALLATION.)
4. Remove in the order indicated in the table.

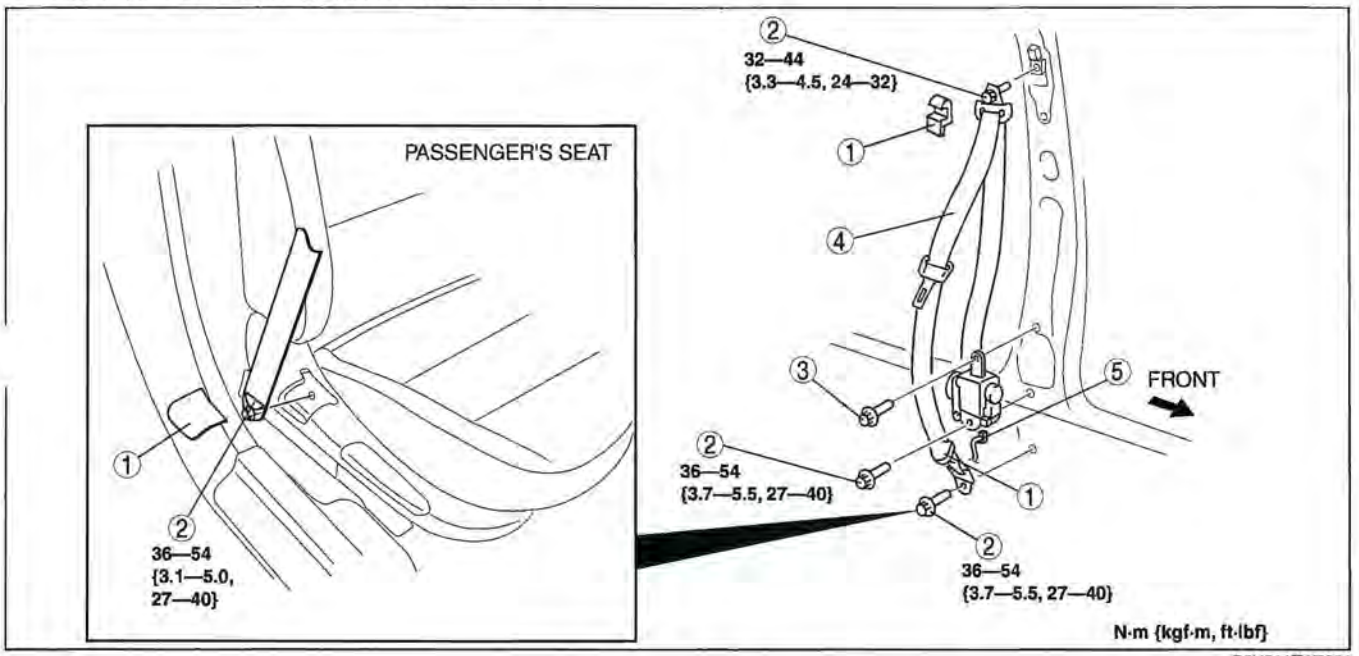

D6U811ZW7004

1	Cover
2	Bolt
3	screw

4	Front seat belt
5	Pre-tensioner seat belt connector (See 08–11–4 Pre-tensioner Seat Belt Connector Removal Note)

5. Install in the reverse order of removal.
6. Verify that the air bag system warning light illuminates for **approx. 6 s** and goes out.
   - If the air bag system warning light does not operate in the manner described above, there is a malfunction in the system. Inspect the system using the on-board diagnostic function.

Pre-tensioner Seat Belt Connector Removal Note

1. Using a flathead screwdriver, pry out the pre-tensioner seat belt connector stopper plate.
2. Disconnect the pre-tensioner seat belt connector.

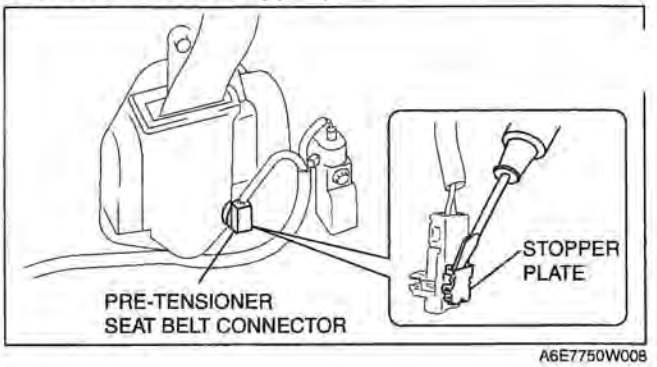

A6E7750W008

REAR SIDE SEAT BELT REMOVAL/INSTALLATION

E6U081157830W01

Caution

- **The ELR has a spring that will unwind if the retractor's cover is removed. The spring cannot be rewound by hand. If this occurs, the ELR will not work properly. Therefore, do not disassemble the retractor.**

Sport Sedan

1. Fold the rear seat back.
2. Remove the rear side seats. (See 09–13–16 REAR SEAT REMOVAL/INSTALLATION [SPORT SEDAN].)(See 09–13–14 REAR SEAT REMOVAL/INSTALLATION [MAZDASPEED6]
3. Remove the rear package trim. (See 09–17–16 REAR PACKAGE TRIM REMOVAL/INSTALLATION [SPORT SEDAN].)
4. Remove the bolts.
5. Remove the rear side seat belt.
6. Install in the reverse order of removal.

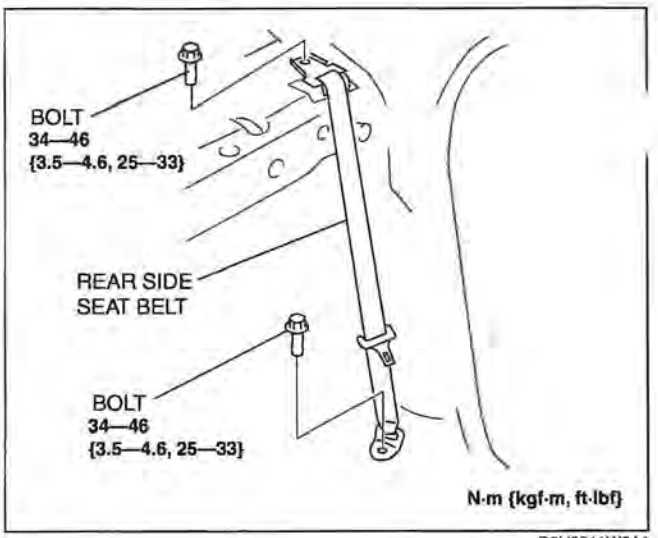

D6U0811W0A1

5-Door, Sport Wagon

Note

- Rear side seat belts are built into the rear seat back. See rear seat disassembly/assembly to remove/install the rear side seat belt.

REAR CENTER SEAT BELT REMOVAL/INSTALLATION

E6U081157830W03

Caution
- **The ELR (emergency locking retractor) has a spring that will unwind if the retractor cover is removed. The spring cannot be rewound by hand. If this occurs, the ELR will not work properly. Therefore, do not disassemble the retractor.**

Sport Sedan

1. Fold down the rear seat back.
2. Remove the rear package trim. (See 09–17–16 REAR PACKAGE TRIM REMOVAL/INSTALLATION [SPORT SEDAN].)
3. Remove the bolt.
4. Remove the rear center seat belt.
5. Install in the reverse order of removal.

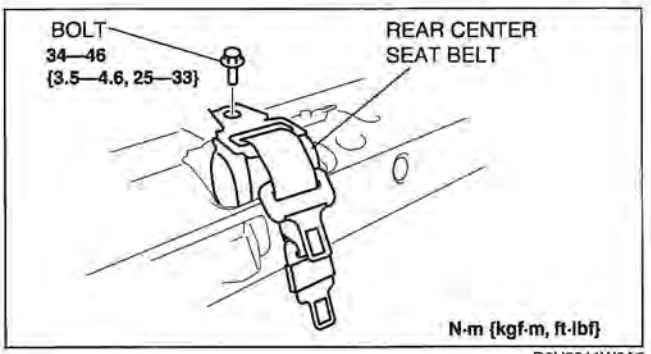

D6U0811W0A2

5-Door

1. Remove the rear scuff plate. (See 09–17–12 REAR SCUFF PLATE REMOVAL/INSTALLATION.)
2. Remove the tire house trim. (See 09–17–15 TIRE HOUSE TRIM REMOVAL/INSTALLATION.)
3. Remove the trunk side trim. (See 09–17–17 TRUNK SIDE TRIM REMOVAL/INSTALLATION.)
4. Remove the C-pillar trims. (See 09–17–14 C-PILLAR TRIM REMOVAL/INSTALLATION.)
5. Remove the bolts.

1	Bolt
2	Rear center seat belt

6. Remove the rear center seat belt.
7. Install in the reverse order of removal.

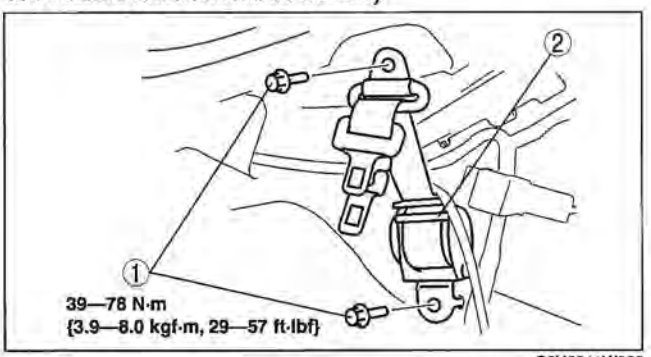

C6U0811W002

Sport Wagon

1. Remove the headliner. (See 09–17–24 HEADLINER REMOVAL/INSTALLATION.)
2. Remove the bolts.

1	Bolt
2	Rear center seat belt

3. Remove the rear center seat belt.
4. Install in the reverse order of removal.

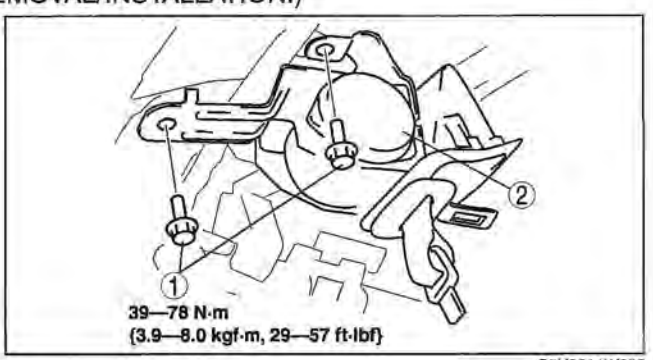

C6U0811W003

FRONT BUCKLE REMOVAL/INSTALLATION

E6U081157620W01

1. Disconnect the negative battery cable.
2. Remove the front seat. (See 09–13–4 FRONT SEAT REMOVAL/INSTALLATION [L3 WITH TC].) (See 09–13–5 FRONT SEAT REMOVAL/INSTALLATION [EXCEPT L3 WITH TC].)
3. Disconnect the buckle switch connector.

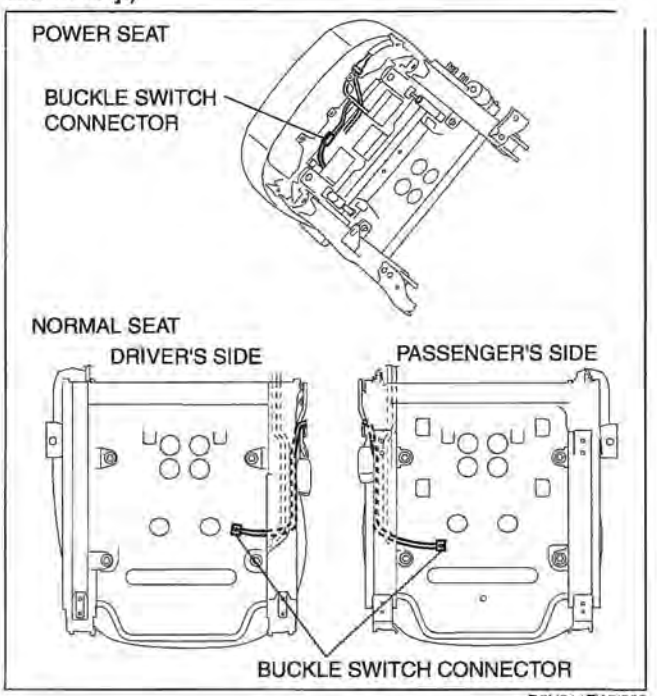

D6U811ZW7003

4. Remove bolt.
5. Install in the reverse order of removal.

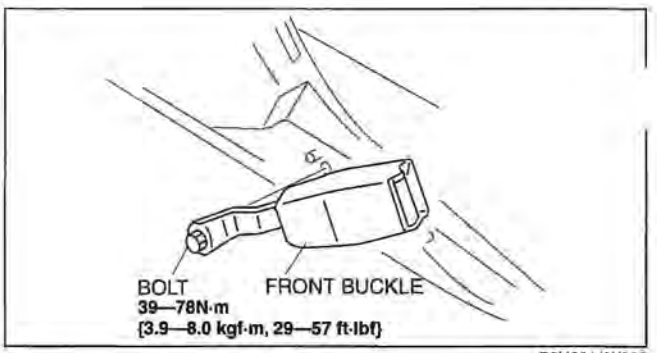

B6U0811W002

REAR BUCKLE REMOVAL/INSTALLATION

E6U081157720W01

1. Remove the rear seat cushion. (See 09–13–16 REAR SEAT REMOVAL/INSTALLATION [SPORT SEDAN].) (See 09–13–14 REAR SEAT REMOVAL/INSTALLATION [MAZDASPEED6].)
2. Remove the bolts.
3. Remove the rear buckles.
4. Install in the reverse order of removal.

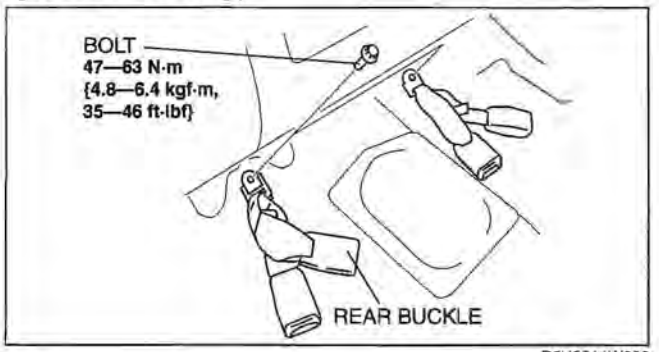

B6U0811W009

SEAT BELT INSPECTION

E6U081157000W03

Belt

1. Verify that the belt is installed properly with no twists or kinks.
   Verify that there is no damage to the seat belt and no deformation of the metal fittings.
   - If there is any malfunction, replace the seat belt.

ELR

1. Verify that the belt can be pulled out smoothly, and that it retracts smoothly.
   - If there is any malfunction, replace the seat belt.
2. Verify that the retractor locks when the belt is pulled quickly.
   - If there is any malfunction, replace the seat belt.
3. Remove the retractor.

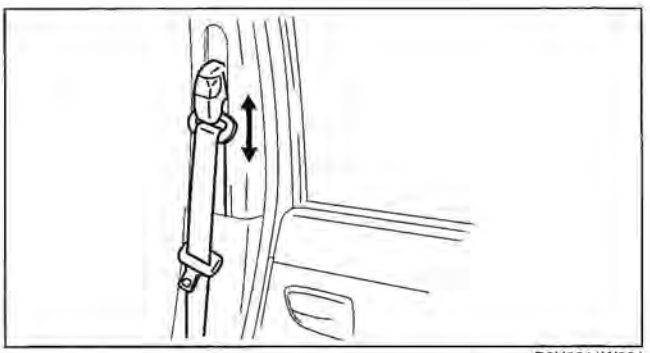

B6U0811W004

4. While pulling the seat belt out, make sure that the seat belt does not lock when the retractor is tilted slowly **up to 15°** from the mounted position and locks when the retractor is tilted **40° or more**.
   - If not as specified, replace the seat belt.

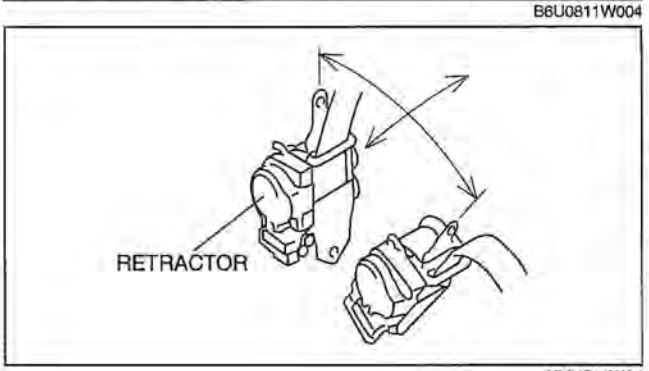

YMU811WA4

ALR

1. Pull the belt out fully to change the lock mode from ELR to ALR.
2. Verify that retractor makes a clicking sound as the belt slowly retracts. If no sound is heard, the lock mode has not changed to ALR. If necessary, repeat Step 1.
   - If there is any malfunction, replace the seat belt.
3. Verify that the retractor locks when pulled.
   - If there is any malfunction, replace the seat belt.
4. Verify that the lock mode changes to ELR when the belt is fully pulled out.
   - If there is any malfunction, replace the seat belt.

Load Limiter Retractor

Warning

- **When the load limiter operates, the belt and anchor rub against each other strongly leaving a trace of wear. If the seat belt is used in this state, the seat belt will not function to its designed effect and there is the possibility of serious injury to passengers. Be sure to replace the seat belt once the load limiter operates.**

1. If the vehicle has been subjected to a shock in an accident, pull the belt from the retractor and confirm that there is no trace of wear (the load limiter has not operated) by visually inspecting and feeling the belt.
   - If there is any malfunction, replace the seat belt.

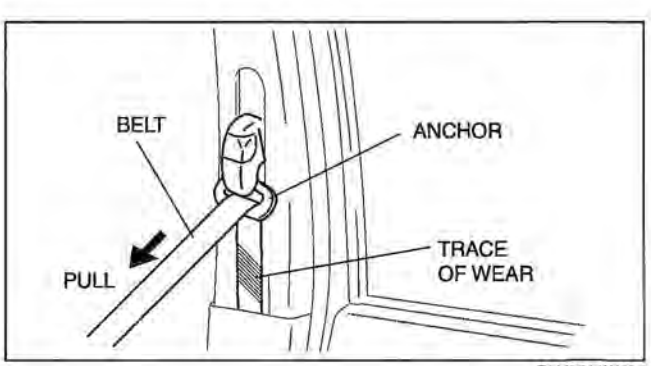

B6U0811W005

BUCKLE SWITCH INSPECTION

E6U081157620W02

1. Since the buckle switch cannot be inspected separately, perform air bag DTC inspection.

CHILD-RESTRAINT SEAT ANCHOR REMOVAL/INSTALLATION

E6U081100117

Sport Sedan

1. Remove the cover.
2. Remove the bolt and child restraint seat anchor.
3. Install in the reverse order of removal.

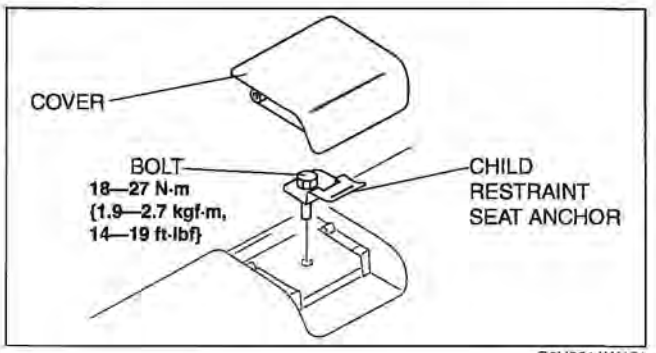

C6U0811W101

5-Door, Sport Wagon

1. Remove the bolt and child restraint seat anchor.

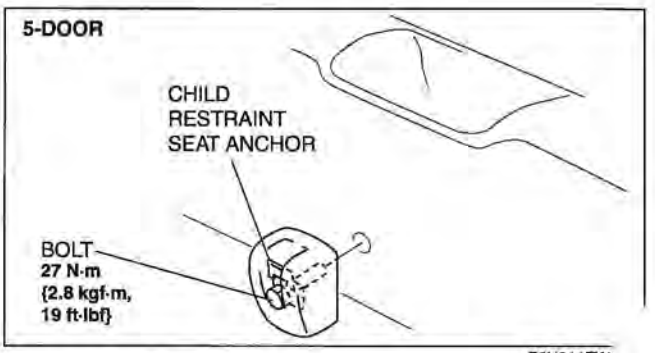

E6U811ZW_

2. Install in the reverse order of removal.

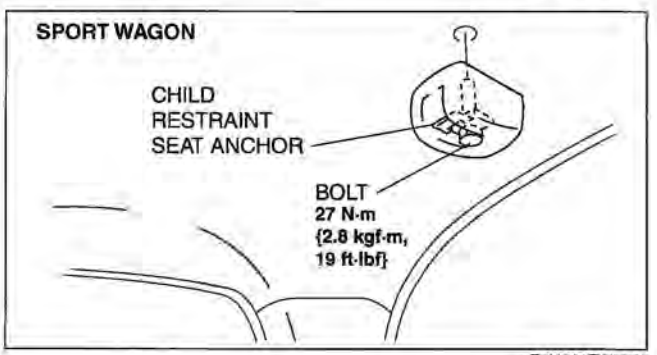

E6U811ZW5003

08–60 SERVICE TOOLS

RESTRAINTS SST 08–60–1

RESTRAINTS SST

E6U086000000W01

49 H066 002 Deployment Tool 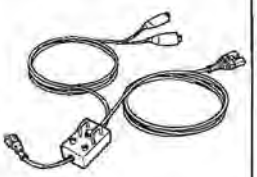	49 D066 002 Adapter Harness 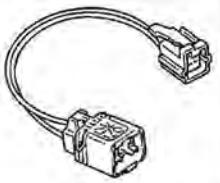	49 L066 002 Adapter Harness 
49 G066 003 Adapter Harness 	49 N088 0A0 Fuel & Thermometer Checker 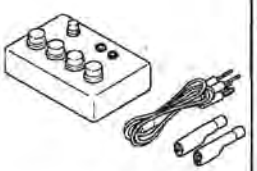	418-FS475 WDS 

BODY & ACCESSORIES

09 SECTION

ON-BOARD DIAGNOSTIC [MULTIPLEX COMMUNICATION SYSTEM (L3, AJ)] 09-02A
ON-BOARD DIAGNOSTIC [MULTIPLEX COMMUNICATION SYSTEM (L3 WITH TC)] 09-02B
ON-BOARD DIAGNOSTIC [ADVANCED KEYLESS SYSTEM] 09-02C
ON-BOARD DIAGNOSTIC [AUDIO] 09-02D
ON-BOARD DIAGNOSTIC [IMMOBILIZER SYSTEM (WITH ADVANCED KEYLESS SYSTEM)] 09-02E
ON-BOARD DIAGNOSTIC [IMMOBILIZER SYSTEM (WITH KEYLESS ENTRY SYSTEM)] 09-02F
ON-BOARD DIAGNOSTIC [CONTROL SYSTEM] 09-02G
SYMPTOM TROUBLESHOOTING [POWER WINDOW SYSTEMS] 09-03A
SYMPTOM TROUBLESHOOTING [EXTERIOR OPEN/CLOSE FUNCTION] 09-03B
SYMPTOM TROUBLESHOOTING [AUDIO] 09-03C
SYMPTOM TROUBLESHOOTING [CAR-NAVIGATION SYSTEM] 09-03D
SYMPTOM TROUBLESHOOTING [IMMOBILIZER SYSTEM] ... 09-03E
SYMPTOM TROUBLESHOOTING [ADVANCED KEYLESS SYSTEM] 09-03F
SYMPTOM TROUBLESHOOTING [KEYLESS ENTRY SYSTEM] 09-03G
SYMPTOM TROUBLESHOOTING [INSTRUMENT CLUSTER] .. 09-03H
BODY PANELS 09-10
DOORS AND LIFTGATE 09-11
GLASS/WINDOWS/ MIRRORS 09-12
SEATS 09-13
SECURITY AND LOCKS 09-14
SUNROOF 09-15
EXTERIOR TRIM 09-16
INTERIOR TRIM 09-17
LIGHTING SYSTEMS 09-18
WIPER/WASHER SYSTEM ... 09-19
ENTERTAINMENT 09-20
POWER SYSTEMS 09-21
INSTRUMENTATION/DRIVER INFO. 09-22
CONTROL SYSTEM 09-40
TECHNICAL DATA 09-50
SERVICE TOOLS 09-60

09–02A

09–02A ON-BOARD DIAGNOSTIC [MULTIPLEX COMMUNICATION SYSTEM (L3, AJ)]

MULTIPLEX COMMUNICATION SYSTEM [L3, AJ] 09–02A–2
Outline 09–02A–2
Flowchart 09–02A–2
DTC TABLE [MULTIPLEXCOMMUNICATION SYSTEM (L3, AJ)] 09–02A–4
I/D/DATA MONITOR TABLE [MULTIPLEX COMMUNICATION SYSTEM (L3, AJ)] 09–02A–4
PROCEDURES FOR DETERMINING THE LOCATION OF A MALFUNCTION [L3, AJ] 09–02A–5
System Wiring Diagram 09–02A–5
PCM 09–02A–5
ABS/TCS HU/CM 09–02A–5
TCM 09–02A–6
Instrument Cluster 09–02A–6
DTC U0073, U2516 [L3, AJ] 09–02A–7

MULTIPLEX COMMUNICATION SYSTEM [L3, AJ]

E6U090255430W01

Outline

- If the controller area network (CAN) system is malfunctioning, read the DTCs of the following modules, using the **SST** (WDS or equivalent) to determine the malfunctioning system.
  - — PCM
  - — ABS/TCS HU/CM
  - — TCM
  - — Instrument cluster

Flowchart

- Use the following flowchart to verify the cause of the trouble.

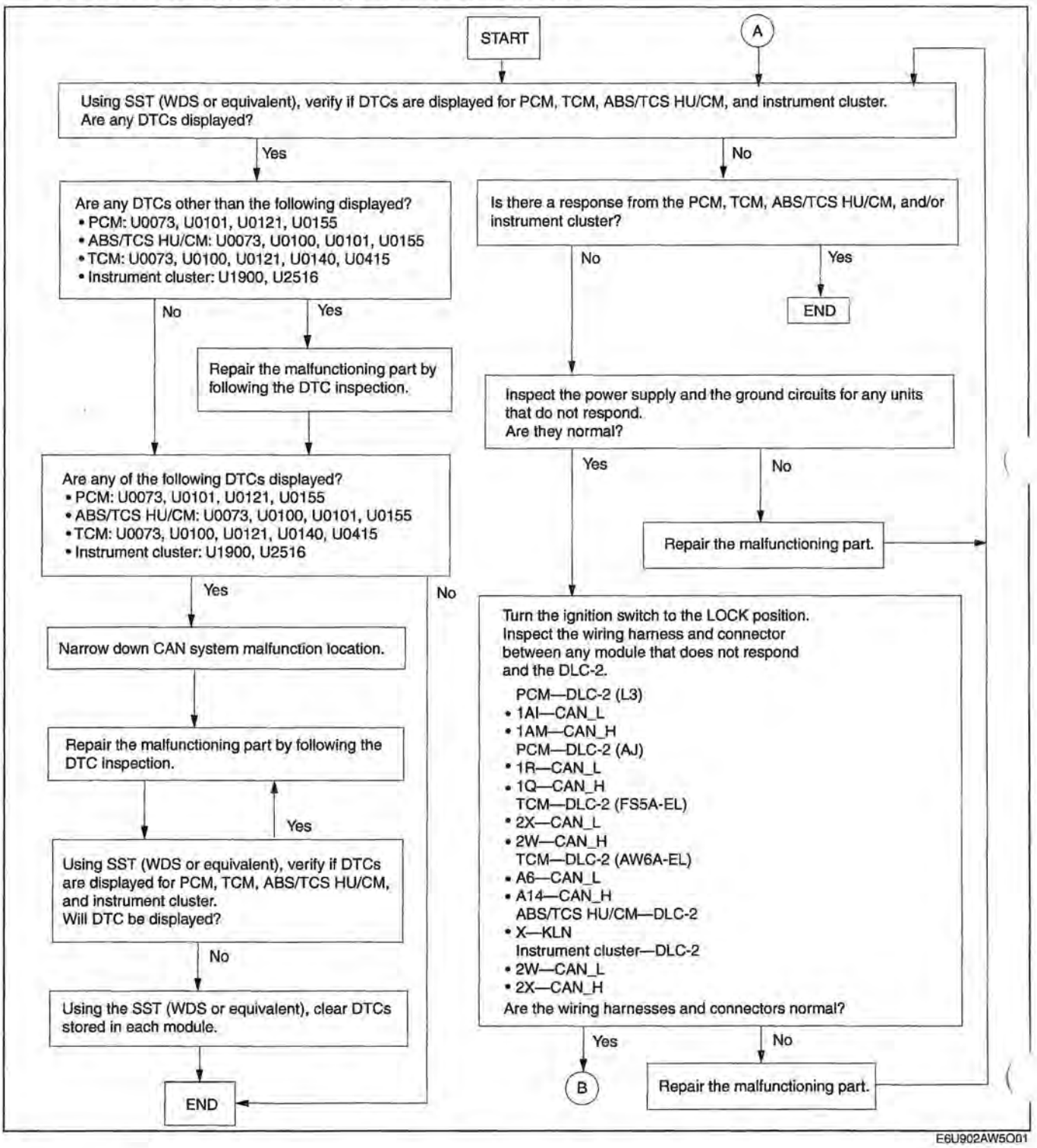

E6U902AW5O01

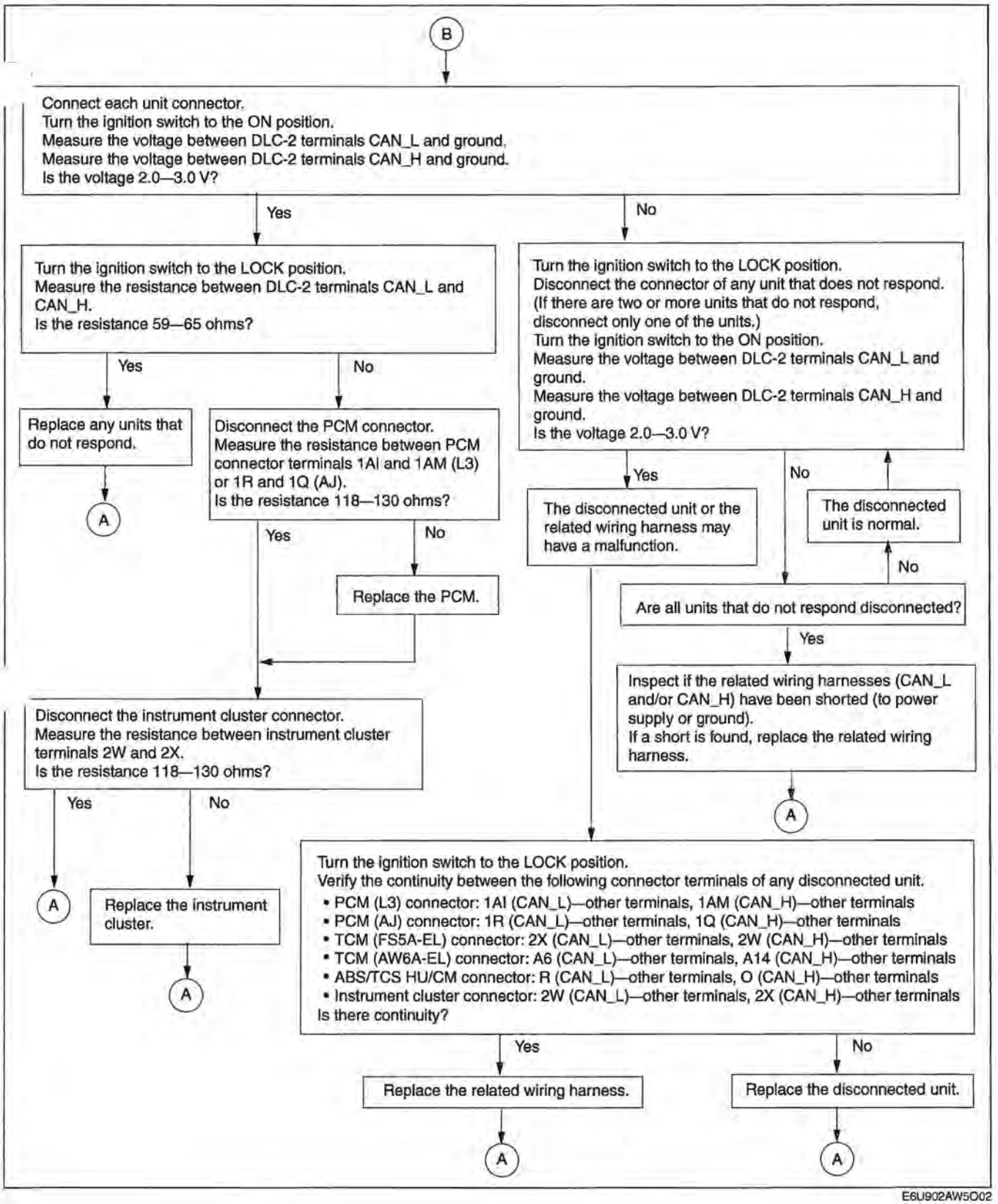

E6U902AW5O02

DTC TABLE [MULTIPLEX COMMUNICATION SYSTEM (L3, AJ)]

E6U090255430W02

DTC	Malfunction location	DTC output module	Page
U0073	CAN system communication error	• PCM • TCM • ABS/TCS HU/CM	(See 09–02A–7 DTC U007' U2516 [L3, AJ])
U0100	Communication error to PCM	• TCM • ABS/TCS HU/CM	(See 09–02A–5 PROCEDURES FOR DETERMINING THE LOCATION OF A MALFUNCTION [L3, AJ])
U0101	Communication error to TCM	• PCM • ABS/TCS HU/CM	
U0121	Communication error to ABS/TCS HU/CM	• PCM • TCM	
U0140	Communication error to instrument cluster	TCM	
U0155	Communication error to instrument cluster	• PCM • ABS/TCS HU/CM	
U0415	Abnormal message from ABS/TCS HU/CM	TCM	
U1900	Communication error	Instrument cluster	(See 09–02A–5 PROCEDURES FOR DETERMINING THE LOCATION OF A MALFUNCTION [L3, AJ])
U2516	CAN system communication error	Instrument cluster	(See 09–02A–7 DTC U0073, U2516 [L3, AJ])

PID/DATA MONITOR TABLE [MULTIPLEX COMMUNICATION SYSTEM (L3, AJ)]

E6U090255430W03

PID name (definition)	Condition	Specification	PID monitor module	Terminal
ABS_MSG (Missing message from the ABS/TCS HU/CM	Present	Circuit in the ABS/TCS HU/CM is normal	Instrument cluster	• ABS/TCS HU/CM: O, R • Instrument cluster: 2W, 2X
	Not Present	Circuit in the ABS/TCS HU/CM is abnormal		
PCM_MSG (Missing message from the PCM)	Present	Circuit in the PCM is normal	• ABS/TCS HU/CM • Instrument cluster	
	Not Present	Circuit in the PCM is abnormal		
TCM_MSG (Missing message from the TCM)	Present	Circuit in the TCM is normal	• ABS/TCS HU/CM • Instrument cluster	
	Not Present	Circuit in the TCM is abnormal		

PROCEDURES FOR DETERMINING THE LOCATION OF A MALFUNCTION [L3, AJ]

E6U090255430W04

System Wiring Diagram

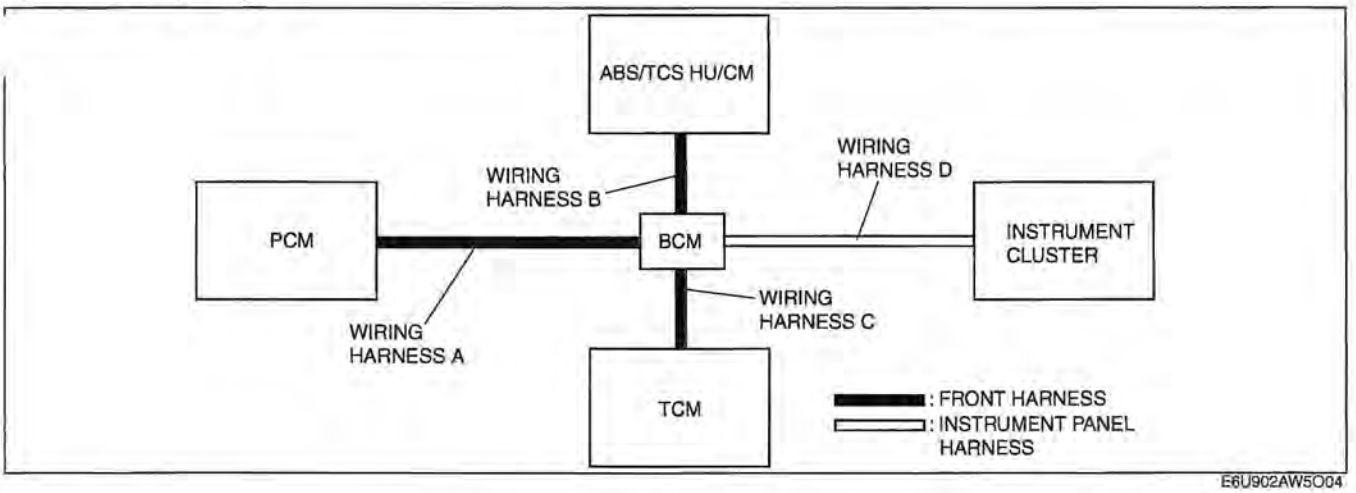

E6U902AW5O04

PCM

1. Check the display of DTC U0101, U0121 and/or U0155, using the **SST** (WDS or equivalent). (See 09–02A–4 DTC TABLE [MULTIPLEX COMMUNICATION SYSTEM (L3, AJ)].)
2. Referring to the following table, determine the malfunctioning part of the CAN system.

X: Normal
—: Communication error

Module	Communication status			Malfunction location
	ABS/TCS HU/CM	TCM	Instrument cluster	
PCM	—	—	—	• Wiring harness A • BCM • PCM
	—	X	X	• Wiring harness B • BCM • ABS/TCS HU/CM
	X	—	X	• Wiring harness C • BCM • TCM
	X	X	—	• Wiring harness D • BCM • Instrument cluster

ABS/TCS HU/CM

1. Check the display of DTC U0100, U0101 and/or U0155, using the **SST** (WDS or equivalent). (See 09–02A–4 DTC TABLE [MULTIPLEX COMMUNICATION SYSTEM (L3, AJ)].)
2. Access and monitor the "PCM_MSG" and "TCM_MSG" of PID using the **SST** (WDS or equivalent).
3. Referring to the PID/DATA MONITOR, confirm the display status of the PID. (See 09–02A–4 PID/DATA MONITOR TABLE [MULTIPLEX COMMUNICATION SYSTEM (L3, AJ)].)
4. Referring to the following table, determine the malfunctioning part of the CAN system.

X: Normal
—: Communication error

Module	Communication status			Malfunction location
	PCM	TCM	Instrument cluster	
ABS/TCS HU/CM	—	—	—	• Wiring harness B • BCM • ABS/TCS HU/CM
	—	X	X	• Wiring harness A • BCM • PCM
	X	—	X	• Wiring harness C • BCM • TCM
	X	X	—	• Wiring harness D • BCM • Instrument cluster

TCM

1. Check the display of DTC U0100, U0121 (AW6A-EL), U0140 (AW6A-EL) and/or U0415 (AW6A-EL) using the **SST** (WDS or equivalent). (See 09–02A–4 DTC TABLE [MULTIPLEX COMMUNICATION SYSTEM (L3, AJ)].)
2. Access and monitor the "TCM_MSG" of ABS/TCS HU/CM and instrument cluster PID using the **SST** (WDS c equivalent).
3. Referring to the PID/DATA MONITOR, confirm the display status of the PID. (See 09–02A–4 PID/DATA MONITOR TABLE [MULTIPLEX COMMUNICATION SYSTEM (L3, AJ)].)
4. Referring to the following table, determine the malfunctioning part of the CAN system.

X: Normal
—: Communication error

Module	Communication status			Malfunction location
	PCM	ABS/TCS HU/CM	Instrument cluster	
TCM	—	—	—	• Wiring harness C • BCM • TCM
	—	X	X	• Wiring harness A • BCM • PCM
	X	—	X	• Wiring harness B • BCM • ABS/TCS HU/CM
	X	X	—	• Wiring harness D • BCM • Instrument cluster

Instrument Cluster

1. Access and monitor the "ABS_MSG", "PCM_MSG" and "TCM_MSG" of PID using the **SST** (WDS or equivalent).
2. Referring to the PID/DATA MONITOR, confirm the display status of the PID. (See 09–02A–4 PID/DATA MONITOR TABLE [MULTIPLEX COMMUNICATION SYSTEM (L3, AJ)].)
3. Referring to the following table, determine the malfunctioning part of the CAN system.

X: Normal
—: Communication error

Module	Communication status			Malfunction location
	PCM	ABS/TCS HU/CM	TCM	
Instrument cluster	—	—	—	• Wiring harness D • BCM • Instrument cluster
	—	X	X	• Wiring harness A • BCM • PCM
	X	—	X	• Wiring harness B • BCM • ABS/TCS HU/CM
	X	X	—	• Wiring harness C • BCM • TCM

DTC U0073, U2516 [L3, AJ]

E6U090255430W05

DTC	U0073	PCM ABS/TCS HU/CM TCM	CAN system communication error
	U2516	Instrument cluster	
DETECTION CONDITION	**Warning** • **Detection conditions are for understanding the DTC outline before performing an inspection. Performing an inspection according to only detection conditions may cause injury due to operating error, or damage the system. When performing an inspection, always follow the inspection procedure.** • CAN system related harness malfunction • Related module communication error		
POSSIBLE CAUSE	• Open or short circuit in wiring harness • Malfunction of connectors between PCM, ABS/TCS HU/CM, TCM, BCM, and instrument cluster • PCM malfunction • ABS/TCS HU/CM malfunction • TCM malfunction • BCM malfunction • Instrument cluster malfunction		

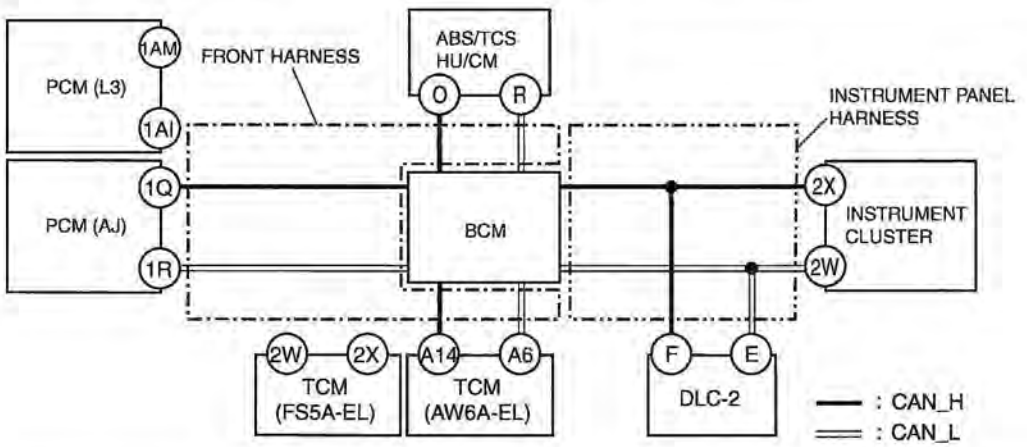

Diagnostic procedure

STEP	INSPECTION		ACTION
1	**INSPECT CAN SYSTEM-RELATED DTC** • Are any DTCs other than the following displayed? — U0073 — U2516	Yes	Determine malfunctioning part in CAN system. (See 09–02A–5 PROCEDURES FOR DETERMINING THE LOCATION OF A MALFUNCTION [L3, AJ])
		No	Go to the next step.
2	**INSPECT CONNECTOR** • Inspect the connector of the module that outputs the DTC. • Is it normal?	Yes	Go to the next step.
		No	Repair or replace the connector, then go to Step 4.
3	**INSPECT WIRING HARNESSES** • Inspect for the following malfunctioning wiring harnesses: — Short to GND — Short to power supply — Twisted pair short each other — Open circuit • Is there any malfunction?	Yes	Replace the wiring harness, then go to the next step.
		No	Go to the next step.
4	**VERIFY TROUBLESHOOTING COMPLETED** • Make sure to reconnect all disconnected connectors. • Clear the DTC using the WDS or equivalent. • Perform KOEO/KOER self-test. • Is the same DTC present?	Yes	Replace the module that outputs the DTC, then retry this step.
		No	Troubleshooting completed.

09–02B ON-BOARD DIAGNOSTIC [MULTIPLEX COMMUNICATION SYSTEM (L3 WITH TC)]

JLTIPLEX COMMUNICATION SYSTEM [L3 WITH TC] 09–02B–2
Outline 09–02B–2
Flowchart 09–02B–2
DTC TABLE [MULTIPLEX COMMUNICATION SYSTEM (L3 WITH TC)] 09–02B–4
PID/DATA MONITOR TABLE [MULTIPLEX COMMUNICATION SYSTEM (L3 WITH TC)] 09–02B–5
PROCEDURES FOR DETERMINING THE LOCATION OF A MALFUNCTION [L3 WITH TC] 09–02B–5
System Wiring Diagram 09–02B–5
PCM 09–02B–6
DSC HU/CM 09–02B–6
AWD Control Module 09–02B–6
Keyless Control Module 09–02B–7
Instrument Cluster 09–02B–7
Repair Procedure 09–02B–7
DTC U0073, U2516 [L3 WITH TC] 09–02B–8

MULTIPLEX COMMUNICATION SYSTEM [L3 WITH TC]

E6U090255430W11

Outline

- If the controller area network (CAN) system is malfunctioning, read the DTCs of the following modules, using the **SST** (WDS or equivalent) to determine the malfunctioning system.
  - — PCM
  - — DSC HU/CM
  - — AWD control module
  - — Keyless control module
  - — Instrument cluster

Flowchart

- Use the following flowchart to verify the cause of the trouble.

STEP	INSPECTION		ACTION
1	**INSPECT DTC INDICATION** • Using the WDS or equivalent, inspect if DTCs are displayed for the following module: — PCM — DSC HU/CM — AWD control module — Keyless control module — Instrument cluster • Are any DTCs displayed?	Yes	Go to the next step.
		No	Go to Step 5.
2	**INSPECT CAN SYSTEM-RELATED DTC** • Are any DTCs other than the following displayed? — U0073 — U0100 — U0114 — U0121 — U0155 — U0323 — U0516 — U1900 — U2023 — U2511 — U2516	Yes	Repair the malfunctioning part by following the related DTC inspection. Go to the next step.
		No	Go to the next step.
3	**INSPECT CAN SYSTEM-RELATED DTC** • Are any of the following DTCs displayed? — PCM: U0073, U0121, U0155 — DSC HU/CM: U0073, U0100, U0114, U0155, U2511 — AWD control module: U0073, U0100, U0121 — Keyless control module: U0073, U0100, U0323, U2023 — Instrument cluster: U1900, U2516	Yes	Repair the malfunctioning part by following the DTC inspection. Go to the next step.
		No	Troubleshooting completed.
4	**VERIFY TROUBLESHOOTING COMPLETED** • Clear the DTC from the CAN system-related modules using the WDS or equivalent. • Start the engine. • Are any of the CAN related DTCs displayed?	Yes	Go back to Step 3.
		No	Troubleshooting completed.
5	**INSPECT COMMUNICATION CONDITION** • Is there a response from the following modules? — PCM — DSC HU/CM — AWD control module — Keyless control module — Instrument cluster	Yes	Troubleshooting completed.
		No	Go to the next step.
6	**INSPECT MODULES THAT DO NOT RESPOND** • Inspect the power supply and the ground circuit for any units that do not respond. • Are they normal?	Yes	Go to the next step.
		No	Repair the malfunctioning part, then go back to Step 1.

STEP	INSPECTION		ACTION
7	**INSPECT CONNECTOR AND WIRING HARNESS BETWEEN MODULES THAT DO NOT RESPOND AND DLC-2** • Turn the ignition switch to the LOCK position. • Inspect the wiring harness and connector between any module that does not respond and the DLC-2. **PCM—DLC-2** • 2U—F • 2R—E **DSC HU/CM—DLC-2** • AG—F • AF—E **AWD control module—DLC-2** • G—F • H—E **Keyless control module—DLC-2** • 4AA—F • 4Z—E **Instrument cluster—DLC-2** • 2X—F • 2W—E	Yes	Go to the next step.
		No	Repair the malfunctioning part, then go back to Step 1.
8	**INSPECT WIRING HARNESS** • Turn the ignition switch to the ON position (Engine off). • Measure the voltage between the following terminals. — DLC-2 terminals F and E • Is the voltage **2.0—3.0 V**?	Yes	Go to the next step.
		No	Go to Step 12.
9	**INSPECT WIRING HARNESS** • Turn the ignition switch to the LOCK position. • Measure the resistance between the following terminals. — DLC-2 terminals F and E • Is the resistance **59—65 ohms**?	Yes	Replace the modules that do not respond, then go back to Step 1.
		No	Go to the next step.
10	**INSPECT PCM** • Disconnect the PCM connector. • Measure the resistance between following terminals. — PCM terminals 2U and 2R (part-side) • Is the resistance **118—130 ohms**?	Yes	Go to the next step.
		No	Replace the PCM, then go to the next step.
11	**INSPECT INSTRUMENT CLUSTER** • Disconnect the instrument cluster connector. • Measure the resistance between the following terminals. — Instrument cluster terminals 2X and 2W (part-side) • Is the resistance **118—130 ohms**?	Yes	Go to next step.
		No	Replace the instrument cluster, then go to the next step.
12	**CLASSIFY WIRING HARNESS MALFUNCTION OR MODULE MALFUNCTION** • Turn the ignition switch to the LOCK position. • Disconnect the connector of any unit that does not respond. (If there are two or more units that do not respond, disconnect only one of the units.) • Turn the ignition switch to the ON position. • Measure the voltage between the following terminals. — DLC-2 terminals F and E • Is voltage **2.0—3.0 V**?	Yes	Go to the next step.
		No	Retry this step with other module connector disconnected. If all units that do not respond are disconnected, go to Step 14.

STEP	INSPECTION		ACTION
13	**INSPECT WIRING HARNESS OF ANY UNIT THAT DOES NOT RESPOND** • Turn the ignition switch to the LOCK position. • Inspect for continuity between the following connector terminals of any disconnected unit. **PCM** • 2U—other terminals • 2R—other terminals **DSC HU/CM** • AG—other terminals • AF—other terminals **AWD control module** • G—other terminals • H—other terminals **Keyless control module** • 4AA—other terminals • 4Z—other terminals **Instrument cluster** • 2X—other terminals • 2W—other terminals Is there continuity?	Yes	Repair or replace the wiring harness, then go back to Step 1.
		No	Replace the disconnected unit, then go back to Step 1.
14	**INSPECT KLN RELATED WIRING HARNESS** • Inspect the related wiring harnesses (KLN) for the short circuit (to power supply or ground). • Is the wiring harness normal?	Yes	If wiring harness is normal but DSC HU/CM does not respond, inspect DSC HU/CM. Go back to Step 1.
		No	Repair or replace the wiring harness, then go back to Step 1.
15	**INSPECT CAN RELATED WIRING HARNESS** • Inspect the related wiring harnesses (CAN_L and/or CAN_H) for the short circuit (to power supply or ground). • Is the wiring harness normal?	Yes	Go back to Step 1.
		No	Replace the wiring harness, then go back to Step 1.

DTC TABLE [MULTIPLEX COMMUNICATION SYSTEM (L3 WITH TC)]

E6U090255430W12

DTC	Malfunction location	DTC output module	Page
U0073	CAN system communication error	• PCM • DSC HU/CM • AWD control module • Keyless control module	(See 09–02B–8 DTC U0073, U2516 [L3 WITH TC])
U0100	Communication error to PCM	• DSC HU/CM • AWD control module • Keyless control module	(See 09–02B–5 PROCEDURES FOR DETERMINING THE LOCATION OF A MALFUNCTION [L3 WITH TC])
U0114	Communication error to AWD control module	DSC HU/CM	
U0121	Communication error to DSC HU/CM	• PCM • AWD control nodule	
U0155	Communication error to instrument cluster	• PCM • DSC HU/CM	
U0323	Communication error to instrument cluster	Keyless control module	
U1900	Communication error to other modules	Instrument cluster	(See 09–02B–5 PROCEDURES FOR DETERMINING THE LOCATION OF A MALFUNCTION [L3 WITH TC])
U2023	Abnormal message from PCM	Keyless control module	
U2511	Abnormal message from AWD control module	DSC HU/CM	
U2516	CAN system communication error	Instrument cluster	(See 09–02B–8 DTC U0073, U2516 [L3 WITH TC])

PID/DATA MONITOR TABLE [MULTIPLEX COMMUNICATION SYSTEM (L3 WITH TC)]

E6U090255430W13

PID name (definition)	Condition	Specification	PID monitor module	Terminal
ABS_MSG (Missing message from the DSC HU/CM	Present	Circuit in the DSC HU/CM is normal	Instrument cluster	• DSC HU/CM: AF, AG • Instrument cluster: 2W, 2X
	Not Present	Circuit in the ABS/TCS HU/CM is abnormal		
AWD_MSG (Missing message from the AWD control module)	Present	Circuit in the AWD control module is normal	• DSC HU/CM • Instrument cluster	
	Not Present	Circuit in the AWD control module is abnormal		
IC_MSG (Missing message from the instrument cluster)	Present	Circuit in the instrument cluster is normal	DSC HU/CM	
	Not Present	Circuit in the instrument cluster is abnormal		
PCM_MSG (Missing message from the PCM)	Present	Circuit in the PCM is normal	• DSC HU/CM • Instrument cluster	
	Not Present	Circuit in the PCM is abnormal		
RKE_MSG (Missing message from the keyless control module)	Present	Circuit in the keyless control module is normal	Instrument cluster	
	Not Present	Circuit in the keyless control module is abnormal		

PROCEDURES FOR DETERMINING THE LOCATION OF A MALFUNCTION [L3 WITH TC]

E6U090255430W14

System Wiring Diagram

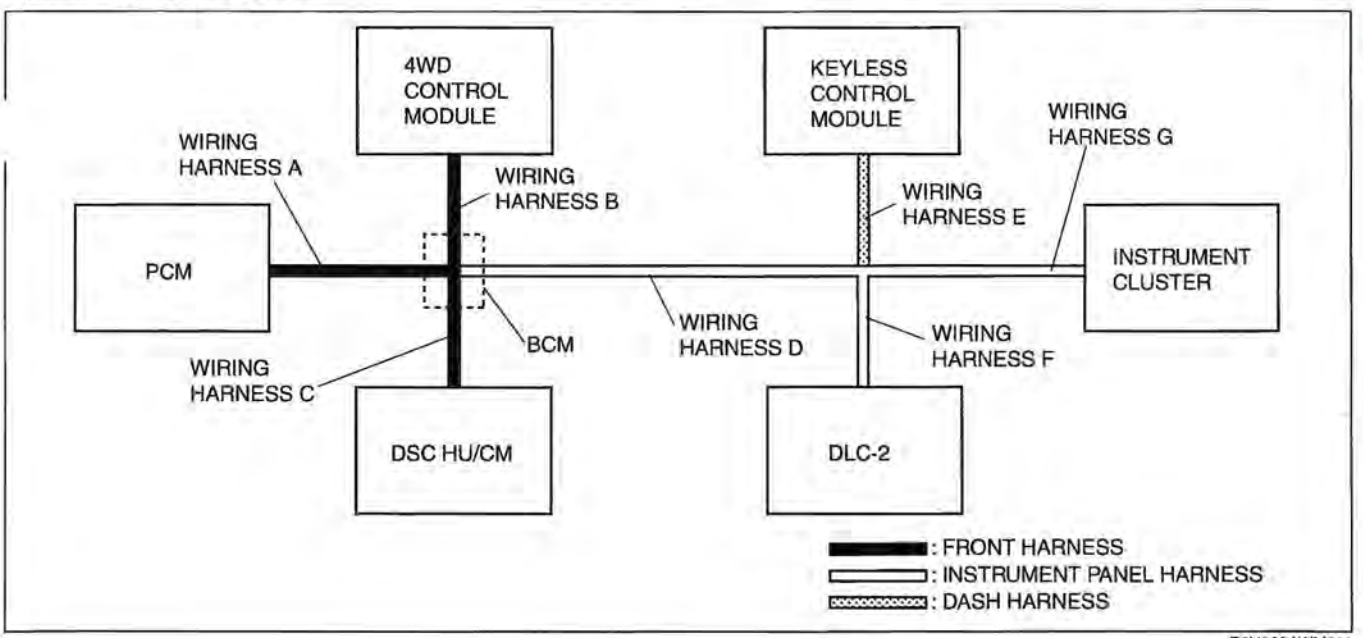

E6U902AWM001

PCM

1. Check the display of DTC U0121 and/or U0155, using the **SST** (WDS or equivalent). (See 09–02B–4 DTC TABLE [MULTIPLEX COMMUNICATION SYSTEM (L3 WITH TC)].)
2. Referring to the following table, determine the malfunctioning part of the CAN system.

X: Normal
—: Communication error

Module	Communication status		Malfunction location
	DSC HU/CM	Instrument cluster	
PCM	—	—	• Wiring harness A • PCM
	—	X	• Wiring harness C • DSC HU/CM
	X	—	• Wiring harness D • Wiring harness G • Instrument cluster

DSC HU/CM

1. Check the display of DTC U0100, U0114, U0155 and/or U2511, using the **SST** (WDS or equivalent). (See 09–02B–4 DTC TABLE [MULTIPLEX COMMUNICATION SYSTEM (L3 WITH TC)].)
2. Access and monitor the "PCM_MSG" and "AWD_MSG" of PID using the **SST** (WDS or equivalent).
3. Referring to the PID/DATA MONITOR, confirm the display status of the PID. (See 09–02B–5 PID/DATA MONITOR TABLE [MULTIPLEX COMMUNICATION SYSTEM (L3 WITH TC)].)
4. Referring to the following table, determine the malfunctioning part of the CAN system.

X: Normal
—: Communication error

Module	Communication status			Malfunction location
	PCM	AWD control module	Instrument cluster	
DSC HU/CM	—	—	—	• Wiring harness C • DSC HU/CM
	—	X	X	• Wiring harness A • PCM
	X	—	X	• Wiring harness B • AWD control module
	X	X	—	• Wiring harness D • Wiring harness G • Instrument cluster

AWD Control Module

1. Check the display of DTC U0100 and/or U0121 using the **SST** (WDS or equivalent). (See 09–02B–4 DTC TABLE [MULTIPLEX COMMUNICATION SYSTEM (L3 WITH TC)].)
2. Referring to the following table, determine the malfunctioning part of the CAN system.

X: Normal
—: Communication error

Module	Communication status		Malfunction location
	PCM	DSC HU/CM	
AWD control module	—	—	• Wiring harness D • AWD Control Module
	—	X	• Wiring harness A • PCM
	X	—	• Wiring harness C • DSC HU/CM

Keyless Control Module

1. Check the display of DTC U0100, U0323 and/or U2023 using the **SST** (WDS or equivalent). (See 09–02B–4 DTC TABLE [MULTIPLEX COMMUNICATION SYSTEM (L3 WITH TC)].)
   Referring to the following table, determine the malfunctioning part of the CAN system.

X: Normal
—: Communication error

Module	Communication status		Malfunction location
	PCM	Instrument cluster	
Keyless control module	—	—	• Wiring harness E • Keyless control module
	—	X	• Wiring harness A • PCM
	X	—	• Wiring harness D • Wiring harness G • Instrument cluster

Instrument Cluster

1. Check the display of DTC U1900 using the **SST** (WDS or equivalent). (See 09–02B–4 DTC TABLE [MULTIPLEX COMMUNICATION SYSTEM (L3 WITH TC)].)
2. Access and monitor the "ABS_MSG", "AWD_MSG", "PCM_MSG", "RKE_MSG" and "TPM_MSG" of PID using the **SST** (WDS or equivalent).
3. Referring to the PID/DATA MONITOR, confirm the display status of the PID. (See 09–02B–5 PID/DATA MONITOR TABLE [MULTIPLEX COMMUNICATION SYSTEM (L3 WITH TC)].)
4. Referring to the following table, determine the malfunctioning part of the CAN system.

X: Normal
—: Communication error

Module	Communication status				Malfunction location
	PCM	DSC HU/CM	AWD control module	Keyless control module	
Instrument cluster	—	—	—	—	• Wiring harness G • Instrument cluster
	—	X	X	X	• Wiring harness A • PCM
	X	—	X	X	• Wiring harness C • DSC HU/CM
	X	X	—	X	• Wiring harness B • AWD control module
	X	X	X	—	• Wiring harness E • Keyless control module
	—	—	—	X	• Wiring harness D

Repair Procedure

1. Inspect the connector of malfunctioning module.
   - If there is any malfunction, repair or replace the connector.
2. Inspect the malfunctioning wiring harnesses as follow:
   - If there is any malfunction, repair or replace the wiring harnesses.
   - If there is no malfunction, replace the malfunctioning module.
     - — Short to GND
     - — Short to power supply
     - — Twisted pair short each other
     - — Open circuit
3. Make sure to reconnect all disconnected connectors.
4. Clear the CAN system related DTCs using the WDS or equivalent.
5. Verify if the CAN system related DTCs are displayed using the WDS or equivalent.
   - If the same following DTCs are present, replace the malfunctioning module.
     - — U0073 (PCM, DSC HU/CM, AWD control module, keyless control module)
     - — U2516 (Instrument cluster)
   - If other DTC is present, perform the appropriate DTC inspection. (See 09–02B–4 DTC TABLE [MULTIPLEX COMMUNICATION SYSTEM (L3 WITH TC)].)

DTC U0073, U2516 [L3 WITH TC]

E6U090255430W15

DTC	U0073	PCM DSC HU/CM AWD control module Keyless control module	CAN system communication error
	U2516	Instrument cluster	
DETECTION CONDITION		**Warning** • **Detection conditions are for understanding the DTC outline before performing an inspection. Performing an inspection according to only detection conditions may cause injury due to operating error, or damage the system. When performing an inspection, always follow the inspection procedure.** • CAN system related harness malfunction • Related module communication error	
POSSIBLE CAUSE		• Open or short circuit in wiring harness • Malfunction of connectors between PCM, DSC HU/CM, TCM, AWD control module, keyless control module and instrument cluster • PCM malfunction • DSC HU/CM malfunction • AWD control module malfunction • Keyless control module malfunction • Instrument cluster malfunction	

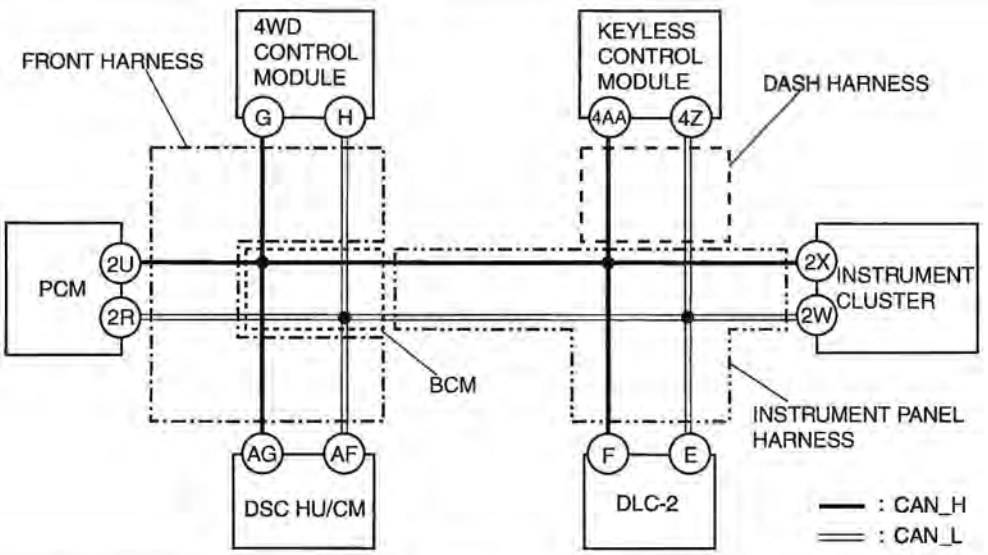

Diagnostic procedure

STEP	INSPECTION		ACTION
1	**INSPECT CAN SYSTEM-RELATED DTC** • Are any DTCs other than the following displayed? — U0073 — U2516	Yes	Determine malfunctioning part in CAN system. (See 09–02B–5 PROCEDURES FOR DETERMINING THE LOCATION OF A MALFUNCTION [L3 WITH TC])
		No	Go to the next step.
2	**INSPECT CONNECTOR** • Inspect the connector of the module that outputs the DTC. • Is it normal?	Yes	Go to the next step.
		No	Repair or replace the connector, then go to Step 4.
3	**INSPECT WIRING HARNESSES** • Inspect for the following malfunctioning wiring harnesses: — Short to GND — Short to power supply — Twisted pair short each other — Open circuit • Is there any malfunction?	Yes	Replace the wiring harness, then go to the next step.
		No	Go to the next step.
4	**VERIFY TROUBLESHOOTING COMPLETED** • Make sure to reconnect all disconnected connectors. • Clear the DTC using the WDS or equivalent. • Start the engine. • Is the same DTC present?	Yes	Replace the module that outputs the DTC, then retry this step.
		No	Troubleshooting completed.

09–02C ON-BOARD DIAGNOSTIC [ADVANCED KEYLESS SYSTEM]

ADVANCED KEYLESS SYSTEM STRUCTURAL VIEW 09–02C–2
DTC INSPECTION [ADVANCED KEYLESS SYSTEM] 09–02C–3
PID/Data Monitor and Record Procedure 09–02C–3
DTC TABLE [ADVANCED KEYLESS SYSTEM] 09–02C–3
PID/DATA MONITOR TABLE [ADVANCED KEYLESS SYSTEM] ... 09–02C–4
DTC B1342 [ADVANCED KEYLESS SYSTEM] 09–02C–5
DTC B1134 [ADVANCED KEYLESS SYSTEM] 09–02C–6
DTC B2477 [ADVANCED KEYLESS SYSTEM] 09–02C–7
DTC B1317/B1318 [ADVANCED KEYLESS SYSTEM] 09–02C–8
DTC B2170 [ADVANCED KEYLESS SYSTEM] 09–02C–9
DTC B1126 [ADVANCED KEYLESS SYSTEM] 09–02C–10
DTC U0236 [ADVANCED KEYLESS SYSTEM] 09–02C–11
DTC B1093 [ADVANCED KEYLESS SYSTEM] 09–02C–12
DTC U0214 [ADVANCED KEYLESS SYSTEM] 09–02C–13
DTC B1133 [ADVANCED KEYLESS SYSTEM] 09–02C–14
DTC B1132 [ADVANCED KEYLESS SYSTEM] 09–02C–15
DTC B1127 [ADVANCED KEYLESS SYSTEM] 09–02C–16
delete 09–02C–16
DTC B1131 [ADVANCED KEYLESS SYSTEM] 09–02C–17
DTC B1129 [ADVANCED KEYLESS SYSTEM] 09–02C–18
DTC B112A [ADVANCED KEYLESS SYSTEM] 09–02C–19

ADVANCED KEYLESS SYSTEM STRUCTURAL VIEW

E6U090267000W43

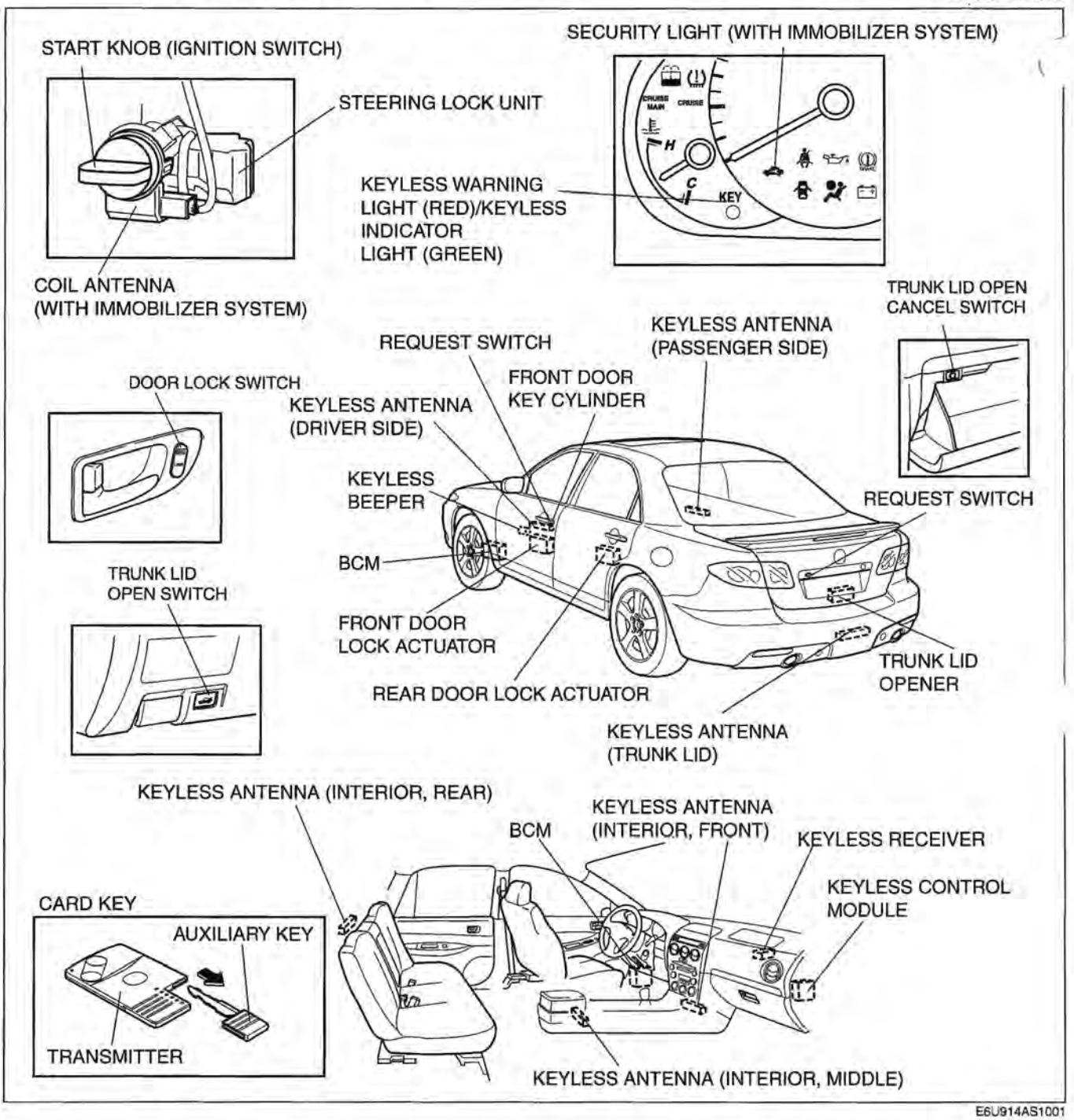

E6U914AS1001

DTC INSPECTION [ADVANCED KEYLESS SYSTEM]

1. Connect the **SST** (WDS or equivalent) to the vehicle DLC-2 16-pin connector.
   Verify the DTC with the **SST** (WDS or equivalent).
2. If a DTC is indicated, perform on-board diagnostic referring to the DTC table.

E6U090267000W12

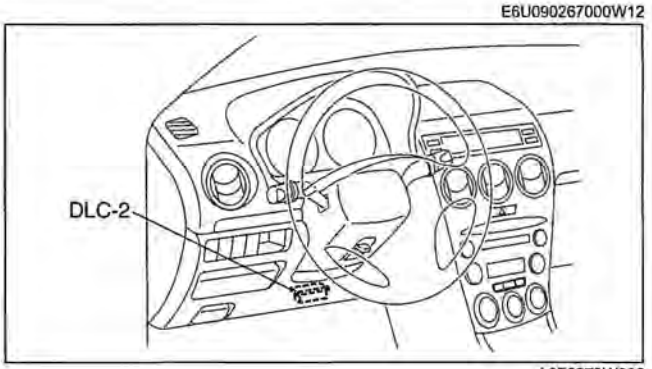

A6E3970W002

PID/Data Monitor and Record Procedure

1. Connect the **SST** (WDS or equivalent) to the vehicle DLC-2 16-pin connector.
2. Access and monitor PIDs using the **SST** (WDS or equivalent).

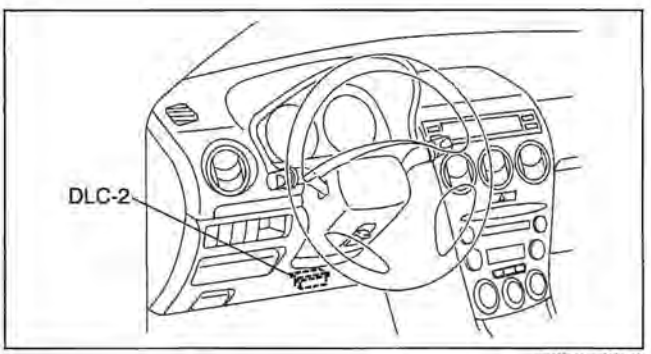

A6E3970W002

09-02

DTC TABLE [ADVANCED KEYLESS SYSTEM]

E6U090267000W13

DTC No.	Description	Page
B1342	Keyless control module internal malfunction	(See 09-02C-5 DTC B1342 [ADVANCED KEYLESS SYSTEM])
B1134	Unprogrammed card key	(See 09-02C-6 DTC B1134 [ADVANCED KEYLESS SYSTEM])
B2477	Configuration error	(See 09-02C-7 DTC B2477 [ADVANCED KEYLESS SYSTEM])
B1317	Keyless control module power supply voltage increases.	(See 09-02C-8 DTC B1317/B1318 [ADVANCED KEYLESS SYSTEM])
B1318	Keyless control module power supply voltage decreases	(See 09-02C-8 DTC B1317/B1318 [ADVANCED KEYLESS SYSTEM])
B2170	Push switch (Steering lock unit)	(See 09-02C-9 DTC B2170 [ADVANCED KEYLESS SYSTEM])
B1126	Steering lock unit internal malfunction	(See 09-02C-10 DTC B1126 [ADVANCED KEYLESS SYSTEM])
U0236	Steering lock unit communication system	(See 09-02C-11 DTC U0236 [ADVANCED KEYLESS SYSTEM])
B1093	Steering lock unit communication error	(See 09-02C-12 DTC B1093 [ADVANCED KEYLESS SYSTEM])
U0214	Keyless receiver	(See 09-02C-13 DTC U0214 [ADVANCED KEYLESS SYSTEM])
B1133	Keyless antenna (Driver's door)	(See 09-02C-14 DTC B1133 [ADVANCED KEYLESS SYSTEM])
B1132	Keyless antenna (Front passenger door)	(See 09-02C-15 DTC B1132 [ADVANCED KEYLESS SYSTEM])
B1127	Keyless antenna (Interior, rear)	(See 09-02C-16 DTC B1127 [ADVANCED KEYLESS SYSTEM])
B1131	Keyless antenna (exterior, rear)	(See 09-02C-17 DTC B1131 [ADVANCED KEYLESS SYSTEM])
B1129	Keyless antenna (Interior, middle)	(See 09-02C-18 DTC B1129 [ADVANCED KEYLESS SYSTEM])

DTC No.	Description	Page
B112A	Keyless antenna (Interior, front)	(See 09–02C–19 DTC B112A [ADVANCED KEYLESS SYSTEM])
U0323	Communication error to instrument cluster	(See 09–02B–2 MULTIPLEX COMMUNICATION SYSTEM [L3 WITH TC])
U0100	Communication error to PCM	(See 09–02B–2 MULTIPLEX COMMUNICATION SYSTEM [L3 WITH TC])
U0140	Communication error to BCM	(See 09–02B–2 MULTIPLEX COMMUNICATION SYSTEM [L3 WITH TC])
U0073	Control module communication error	(See 09–02B–2 MULTIPLEX COMMUNICATION SYSTEM [L3 WITH TC])
U2023	Error signal from CAN related module	(See 09–02B–2 MULTIPLEX COMMUNICATION SYSTEM [L3 WITH TC])

PID/DATA MONITOR TABLE [ADVANCED KEYLESS SYSTEM]

E6U090267000W14

PID/data monitor table

PID name (definition)	Data contents	Unit/ Operation	Terminal
DTC_CNT	Number of continuous DTCs	–	–
RPM	Engine speed	RPM	3Z, 3AA
VSS	Vehicle speed	KPH	3Z, 3AA
VPWR	Supply voltage	V	2D
NUMCARD	Number of programmed card keys	–	–
NUMKEY*	Number of programmed key ID numbers	–	–
DRSW_D	Door switch (Driver's door)	OPEN/ CLOSE	2R
DRSW_ALL	Door switch (All doors and liftgate)	OPEN/ CLOSE	2R
REQ_SW_D	Request switch (Driver's door)	On/Off	3H
REQ_SW_P	Request switch (Passenger door)	On/Off	3J
REQ_SW_BK	Request switch (Trunk lid/Liftgate)	On/Off	3L
LOCK_SW_D	Door lock-link switch	On/Off	3E
IMMOBI	Immobilizer system equipped or not	On*/Off	–
TR/LG_SW	Trunk/liftgate latch switch	OPEN/ CLOSE	2R
IG_KEY_IN	Key reminder switch	Key-In/Key-Out	2O
IG_SW_ST	Ignition switch (Push switch)	Pushed/Not Pushed	2N
BUZZER	Keyless buzzer	On/Off	3Y
PWR_IG1	Power supply (IG1)	On/Off	2B
PWR_ACC	Power supply (ACC)	On/Off	2I

* : Vehicles with immobilizer system

ACTIVE COMMAND MODE TABLE [ADVANCED KEYLESS SYSTEM]

Command name	Output part name	Unit/ Operation	Terminal
BZR_OUT	Keyless buzzer	On/Off	3Y
BZR_INN	Interior buzzer (Instrument cluster)	On/Off	3Z, 3AA
LNP_RED	Keyless warning light (red)	On/Off	3Z, 3AA
LNP_GREEN	Keyless indicator light (green)	On/Off	3Z, 3AA
HAZARD	Hazard flashers	On/Off	2R
DR_LOCK	All doors Lock/Off	Lock/Off	2R
DR_UNLOCK	All doors Unlock/Off	Unlock/Off	2R
2STG_UNLK	All doors Unlock/Off	Unlock/Off	2R

DTC B1342 [ADVANCED KEYLESS SYSTEM]

E6U090267000W15

DTC B1342	Keyless control module internal malfunction.
POSSIBLE CAUSE	• Malfunction in the keyless control module internal circuit

Diagnostic procedure

STEP	INSPECTION		ACTION
1	**INSPECT KEYLESS CONTROL MODULE** • Turn the ignition switch to the ON position. • Is the DTC displayed? — WDS or equivalent: B1342	Yes	Replace the keyless control module and perform the resetting procedure for the advanced keyless system when replacing the keyless control module. (See 09–14–12 KEYLESS CONTROL MODULE REMOVAL/INSTALLATION [WITH ADVANCED KEYLESS SYSTEM].) (See 09–14–15 CARD KEY ID CODE REGISTRATION [WITH ADVANCED KEYLESS SYSTEM]) (See 09–14–17 STEERING LOCK UNIT ID CODE REGISTRATION [WITH ADVANCED KEYLESS SYSTEM]) (See 09–14–17 KEYLESS CONTROL MODULE CONFIGURATION [WITH ADVANCED KEYLESS SYSTEM]) (See 09–14–28 IMMOBILIZER SYSTEM COMPONENT REPLACEMENT/KEY ADDITION AND CLEARING [WITH ADVANCED KEYLESS SYSTEM]) (See 09–14–39 SECURITY ACCESS PROCEDURE)
		No	DTC troubleshooting completed.

DTC B1134 [ADVANCED KEYLESS SYSTEM]

E6U090267000W16

DTC B1134	Unprogrammed card key.
POSSIBLE CAUSE	• Unprogrammed card key. • Malfunction in the keyless control module internal circuit

Diagnostic procedure

STEP	INSPECTION		ACTION
1	**VERIFY NUMBER OF REGISTERED CARD KEYS** • Using the WDS or equivalent, perform the PID/data monitor inspection and confirm the number of registered keys. (See 09–02C–4 PID/DATA MONITOR TABLE [ADVANCED KEYLESS SYSTEM].) • Is card key registered?	Yes	Replace the keyless control module and perform the resetting procedure for the advanced keyless system when replacing the keyless control module. (See 09–14–12 KEYLESS CONTROL MODULE REMOVAL/INSTALLATION [WITH ADVANCED KEYLESS SYSTEM].) (See 09–14–15 CARD KEY ID CODE REGISTRATION [WITH ADVANCED KEYLESS SYSTEM]) (See 09–14–17 STEERING LOCK UNIT ID CODE REGISTRATION [WITH ADVANCED KEYLESS SYSTEM]) (See 09–14–17 KEYLESS CONTROL MODULE CONFIGURATION [WITH ADVANCED KEYLESS SYSTEM]) (See 09–14–28 IMMOBILIZER SYSTEM COMPONENT REPLACEMENT/KEY ADDITION AND CLEARING [WITH ADVANCED KEYLESS SYSTEM]) (See 09–14–39 SECURITY ACCESS PROCEDURE)
		No	• Using the WDS or equivalent, register a card key if necessary. (See 09–14–15 CARD KEY ID CODE REGISTRATION [WITH ADVANCED KEYLESS SYSTEM]) • Go to the next step.
2	**INSPECT KEYLESS CONTROL MODULE** • Turn the ignition switch to the ON position. • Is the DTC displayed? — WDS or equivalent: B1134	Yes	Replace the keyless control module and perform the resetting procedure for the advanced keyless system when replacing the keyless control module. (See 09–14–12 KEYLESS CONTROL MODULE REMOVAL/INSTALLATION [WITH ADVANCED KEYLESS SYSTEM].) (See 09–14–15 CARD KEY ID CODE REGISTRATION [WITH ADVANCED KEYLESS SYSTEM]) (See 09–14–17 STEERING LOCK UNIT ID CODE REGISTRATION [WITH ADVANCED KEYLESS SYSTEM]) (See 09–14–17 KEYLESS CONTROL MODULE CONFIGURATION [WITH ADVANCED KEYLESS SYSTEM]) (See 09–14–28 IMMOBILIZER SYSTEM COMPONENT REPLACEMENT/KEY ADDITION AND CLEARING [WITH ADVANCED KEYLESS SYSTEM]) (See 09–14–39 SECURITY ACCESS PROCEDURE)
		No	DTC troubleshooting completed.

DTC B2477 [ADVANCED KEYLESS SYSTEM]

E6U090267000W17

DTC B2477	Configuration error.
DETECTION CONDITION	• Keyless control module configuration has not been performed correctly.
POSSIBLE CAUSE	• Keyless control module configuration error. • Malfunction in the keyless control module internal circuit

Diagnostic procedure

STEP	INSPECTION		ACTION
1	**PERFORM INSTRUMENT KEYLESS CONTROL MODULE CONFIGURATION** • Perform keyless control module configuration. • Is B2477 displayed?	Yes	Replace the keyless control module and perform the resetting procedure for the advanced keyless system when replacing the keyless control module. (See 09–14–12 KEYLESS CONTROL MODULE REMOVAL/INSTALLATION [WITH ADVANCED KEYLESS SYSTEM].) (See 09–14–15 CARD KEY ID CODE REGISTRATION [WITH ADVANCED KEYLESS SYSTEM]) (See 09–14–17 STEERING LOCK UNIT ID CODE REGISTRATION [WITH ADVANCED KEYLESS SYSTEM]) (See 09–14–17 KEYLESS CONTROL MODULE CONFIGURATION [WITH ADVANCED KEYLESS SYSTEM]) (See 09–14–28 IMMOBILIZER SYSTEM COMPONENT REPLACEMENT/KEY ADDITION AND CLEARING [WITH ADVANCED KEYLESS SYSTEM]) (See 09–14–39 SECURITY ACCESS PROCEDURE)
		No	• Go to the next step.
2	**VERIFY TROUBLESHOOTING OF DTC B2477 COMPLETED** • Clear the DTC from the memory. • Is any DTC displayed?	Yes	Go to the applicable DTC inspection.
		No	DTC troubleshooting completed.

DTC B1317/B1318 [ADVANCED KEYLESS SYSTEM]

E6U090267000W18

DTC	B1317	Keyless control module power supply voltage increases (16.1 V or more)
	B1318	Keyless control module power supply voltage decreases (less than 9 V)
DETECTION CONDITION		• When the keyless control module power supply voltage is not **within 9—16 V.**
POSSIBLE CAUSE		• Open or short circuit in wiring harness between battery and keyless control module • Battery malfunction • Keyless control module malfunction

BCM HARNESS SIDE CONNECTOR

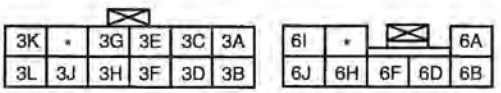

KEYLESS CONTROL MODULE HARNESS SIDE CONNECTOR

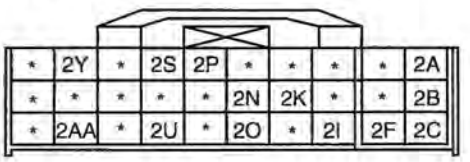



Diagnostic procedure

Step	Inspection		Action
1	**INSPECT FUSE** • Remove the ROOM 15 A fuse. • Is the fuse normal?	Yes	Go to the next step.
		No	Replace the fuse.
2	**INSPECT BATTERY** • Measure the battery positive voltage. • Is the voltage **9 V—16 V**?	Yes	Go to the next step.
		No	The battery has a malfunction. Inspect the charge/discharge system.
3	**INSPECT WIRING HARNESS BETWEEN BATTERY AND BCM** • Measure the BCM terminal 3J voltage. • Is the voltage **9 V—16 V**?	Yes	Install the fuse, then go to the next step.
		No	Repair the wiring harness between the BCM and battery.
4	**INSPECT BCM** • Measure the voltage at the BCM terminal 6H. • Is the voltage **9 V—16 V**?	Yes	Go to the next step.
		No	Replace the BCM. (See 09–40–1 BODY CONTROL MODULE (BCM) REMOVAL/INSTALLATION.)
5	**INSPECT WIRING HARNESS BETWEEN PJB AND SAS CONTROL MODULE** • Turn the ignition switch to the ON position. • Measure the keyless control module terminal 2D voltage. • Is the voltage **9 V—16 V**?	Yes	Replace the keyless control module and perform the resetting procedure for the advanced keyless system when replacing the keyless control module. (See 09–14–12 KEYLESS CONTROL MODULE REMOVAL/INSTALLATION [WITH ADVANCED KEYLESS SYSTEM].) (See 09–14–15 CARD KEY ID CODE REGISTRATION [WITH ADVANCED KEYLESS SYSTEM]) (See 09–14–17 STEERING LOCK UNIT ID CODE REGISTRATION [WITH ADVANCED KEYLESS SYSTEM]) (See 09–14–17 KEYLESS CONTROL MODULE CONFIGURATION [WITH ADVANCED KEYLESS SYSTEM]) (See 09–14–28 IMMOBILIZER SYSTEM COMPONENT REPLACEMENT/KEY ADDITION AND CLEARING [WITH ADVANCED KEYLESS SYSTEM]) (See 09–14–39 SECURITY ACCESS PROCEDURE)
		No	Repair the wiring harness between the BCM and keyless control module.

DTC B2170 [ADVANCED KEYLESS SYSTEM]

E6U090267000W19

DTC B2170	Push switch.
DETECTION CONDITION	• Detect the push switch OFF signal when ignition switch is ON position.
POSSIBLE CAUSE	• Steering lock unit malfunction • Open or short circuit in wiring harness between keyless control module and steering lock unit • Keyless control module malfunction

STEERING LOCK UNIT HARNESS SIDE CONNECTOR



KEYLESS CONTROL MODULE HARNESS SIDE CONNECTOR

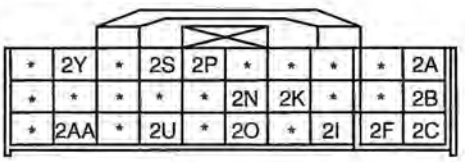



Diagnostic procedure

STEP	INSPECTION		ACTION
1	**INSPECT COMMUNICATION CIRCUIT FOR CONTINUITY** • Disconnect keyless control module connector and steering lock unit connector. • Is there continuity between keyless control module terminal 2N and steering lock unit terminal E?	Yes	Replace the steering lock unit and perform the resetting procedure for the steering lock unit. (See 06–12–7 STEERING WHEEL AND COLUMN REMOVAL/INSTALLATION.) (See 09–14–17 STEERING LOCK UNIT ID CODE REGISTRATION [WITH ADVANCED KEYLESS SYSTEM])
		No	Repair the wiring harness between the steering lock unit and keyless control module.
2	**INSPECT KEYLESS CONTROL MODULE** • Turn the ignition switch to the ON position. • Is the DTC displayed? — WDS or equivalent: B2170	Yes	Replace the keyless control module and perform the resetting procedure for the advanced keyless system when replacing the keyless control module. (See 09–14–12 KEYLESS CONTROL MODULE REMOVAL/INSTALLATION [WITH ADVANCED KEYLESS SYSTEM].) (See 09–14–15 CARD KEY ID CODE REGISTRATION [WITH ADVANCED KEYLESS SYSTEM]) (See 09–14–17 STEERING LOCK UNIT ID CODE REGISTRATION [WITH ADVANCED KEYLESS SYSTEM]) (See 09–14–17 KEYLESS CONTROL MODULE CONFIGURATION [WITH ADVANCED KEYLESS SYSTEM]) (See 09–14–28 IMMOBILIZER SYSTEM COMPONENT REPLACEMENT/KEY ADDITION AND CLEARING [WITH ADVANCED KEYLESS SYSTEM]) (See 09–14–39 SECURITY ACCESS PROCEDURE)
		No	DTC troubleshooting completed.

DTC B1126 [ADVANCED KEYLESS SYSTEM]

E6U090267000W20

DTC B1126	Steering lock unit internal malfunction.
DETECTION CONDITION	• Detect the steering lock unit maifunction signal.
POSSIBLE CAUSE	• Steering lock unit maifunction

Diagnostic procedure

STEP	INSPECTION		ACTION
1	**INSPECT STEERING LOCK UNIT** • Turn the ignition switch to the ON position. • Is the DTC displayed? — WDS or equivalent: B1126	Yes	Replace the steering lock unit and perform the resetting procedure for the steering lock unit. (See 06–12–7 STEERING WHEEL AND COLUMN REMOVAL/INSTALLATION.) (See 09–14–17 STEERING LOCK UNIT ID CODE REGISTRATION [WITH ADVANCED KEYLESS SYSTEM])
		No	DTC troubleshooting completed.

DTC U0236 [ADVANCED KEYLESS SYSTEM]

E6U090267000W21

DTC U0236	Steering lock unit communication system.
DETECTION CONDITION	• Steering lock unit communication error
POSSIBLE CAUSE	• Steering lock unit maifunction • Open or short circuit in wiring harness between keyless control module and steering lock unit • Keyless control module malfunction

STEERING LOCK UNIT
HARNESS SIDE CONNECTOR

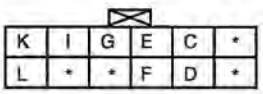

KEYLESS CONTROL MODULE HARNESS
SIDE CONNECTOR

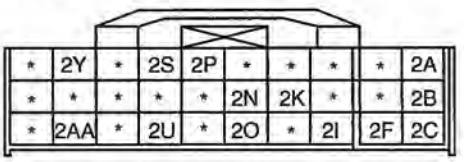



Diagnostic procedure

STEP	INSPECTION		ACTION
1	**INSPECT COMMUNICATION CIRCUIT FOR CONTINUITY** • Disconnect keyless control module connector and steering lock unit connector. • Is there continuity between keyless control module terminal 2P and steering lock unit terminal K?	Yes	• Replace the steering lock unit and perform the resetting procedure for the steering lock unit. (See 06–12–7 STEERING WHEEL AND COLUMN REMOVAL/INSTALLATION.) (See 09–14–17 STEERING LOCK UNIT ID CODE REGISTRATION [WITH ADVANCED KEYLESS SYSTEM]) • Go to the next step.
		No	• Repair the wiring harness between the steering lock unit and keyless control module. • Go to next step.
2	**INSPECT KEYLESS CONTROL MODULE** • Turn the ignition switch to the ON position. • Is the DTC displayed? — WDS or equivalent: U0236	Yes	Replace the keyless control module and perform the resetting procedure for the advanced keyless system when replacing the keyless control module. (See 09–14–12 KEYLESS CONTROL MODULE REMOVAL/INSTALLATION [WITH ADVANCED KEYLESS SYSTEM].) (See 09–14–15 CARD KEY ID CODE REGISTRATION [WITH ADVANCED KEYLESS SYSTEM]) (See 09–14–17 STEERING LOCK UNIT ID CODE REGISTRATION [WITH ADVANCED KEYLESS SYSTEM]) (See 09–14–17 KEYLESS CONTROL MODULE CONFIGURATION [WITH ADVANCED KEYLESS SYSTEM]) (See 09–14–28 IMMOBILIZER SYSTEM COMPONENT REPLACEMENT/KEY ADDITION AND CLEARING [WITH ADVANCED KEYLESS SYSTEM]) (See 09–14–39 SECURITY ACCESS PROCEDURE)
		No	DTC troubleshooting completed.

DTC B1093 [ADVANCED KEYLESS SYSTEM]

E6U090267000W22

DTC B1093	Unprogrammed steering lock unit.
DETECTION CONDITION	• Unprogrammed steering lock unit.
POSSIBLE CAUSE	• Steering lock unit malfunction • Open or short circuit in wiring harness between keyless control module and steering lock unit • Keyless control module malfunction

STEERING LOCK UNIT HARNESS SIDE CONNECTOR



KEYLESS CONTROL MODULE HARNESS SIDE CONNECTOR

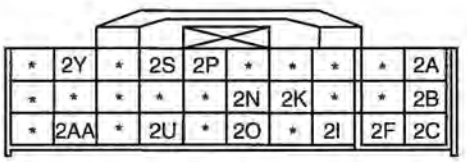



Diagnostic procedure

STEP	INSPECTION		ACTION
1	**INSPECT COMMUNICATION CIRCUIT FOR CONTINUITY** • Disconnect keyless control module connector and steering lock unit connector. • Is there continuity between keyless control module terminal 2P and steering lock unit terminal K?	Yes	• Perform the resetting procedure for the steering lock unit. (See 09–14–17 STEERING LOCK UNIT ID CODE REGISTRATION [WITH ADVANCED KEYLESS SYSTEM]) • Go to the next step.
		No	• Repair the wiring harness between the steering lock unit and keyless control module. • Go to next step.
2	**INSPECT STEERING LOCK UNIT** • Turn the ignition switch to the ON position. • Is the DTC displayed? — WDS or equivalent: B1093	Yes	• Replace the steering lock unit and perform the resetting procedure for the steering lock unit. (See 06–12–7 STEERING WHEEL AND COLUMN REMOVAL/INSTALLATION.) (See 09–14–17 STEERING LOCK UNIT ID CODE REGISTRATION [WITH ADVANCED KEYLESS SYSTEM]) • Go to the next step.
		No	DTC troubleshooting completed.
3	**INSPECT KEYLESS CONTROL MODULE** • Turn the ignition switch to the ON position. • Is the DTC displayed? — WDS or equivalent: B1093	Yes	Replace the keyless control module and perform the resetting procedure for the advanced keyless system when replacing the keyless control module. (See 09–14–12 KEYLESS CONTROL MODULE REMOVAL/INSTALLATION [WITH ADVANCED KEYLESS SYSTEM].) (See 09–14–15 CARD KEY ID CODE REGISTRATION [WITH ADVANCED KEYLESS SYSTEM]) (See 09–14–17 STEERING LOCK UNIT ID CODE REGISTRATION [WITH ADVANCED KEYLESS SYSTEM]) (See 09–14–17 KEYLESS CONTROL MODULE CONFIGURATION [WITH ADVANCED KEYLESS SYSTEM]) (See 09–14–28 IMMOBILIZER SYSTEM COMPONENT REPLACEMENT/KEY ADDITION AND CLEARING [WITH ADVANCED KEYLESS SYSTEM]) (See 09–14–39 SECURITY ACCESS PROCEDURE)
		No	DTC troubleshooting completed.

DTC U0214 [ADVANCED KEYLESS SYSTEM]

E6U090267000W23

DTC U0214	Keyless receiver.
DETECTION CONDITION	• When the keyless receiver power supply voltage is **less than 7.5 V.**
POSSIBLE CAUSE	• Keyless receiver malfunction • Open or short circuit in wiring harness between keyless control module and keyless receiver • Keyless control module malfunction

KEYLESS RECEIVER HARNESS SIDE CONNECTOR

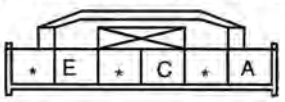

KEYLESS CONTROL MODULE HARNESS SIDE CONNECTOR

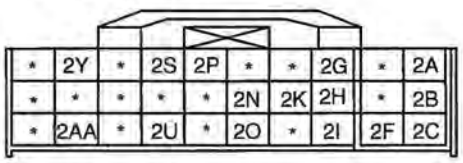



Diagnostic procedure

STEP	INSPECTION		ACTION
1	**INSPECT WIRING HARNESS BETWEEN KEYLESS RECEIVER AND GROUND** • Disconnect keyless receiver connector. • Is there continuity between keyless receiver terminal E and ground?	Yes	Go to next step.
		No	• Repair the wiring harness between the keyless receiver and ground. • Go to next step.
2	**INSPECT COMMUNICATION CIRCUIT FOR CONTINUITY** • Disconnect keyless control module connector and keyless receiver connector. • Inspect the continuity between the following connector terminals. — keyless control module: 2S—keyless receiver: A — keyless control module: 2U—keyless receiver: C • Is there continuity?	Yes	Go to next step.
		No	• Repair the wiring harness between the keyless receiver and keyless control module. • Go to next step.
3	**INSPECT KEYLESS RECEIVER POWER SUPPLY CIRCUIT** • Turn ignition switch to ON position. • Measure voltage at terminal 2S of keyless control module connector. • Is voltage **more than 7.5 V**?	Yes	Replace keyless receiver. (See 09–14–18 KEYLESS RECEIVER REMOVAL/INSTALLATION)
		No	Replace the keyless control module and perform the resetting procedure for the advanced keyless system when replacing the keyless control module. (See 09–14–12 KEYLESS CONTROL MODULE REMOVAL/INSTALLATION [WITH ADVANCED KEYLESS SYSTEM].) (See 09–14–15 CARD KEY ID CODE REGISTRATION [WITH ADVANCED KEYLESS SYSTEM]) (See 09–14–17 STEERING LOCK UNIT ID CODE REGISTRATION [WITH ADVANCED KEYLESS SYSTEM]) (See 09–14–17 KEYLESS CONTROL MODULE CONFIGURATION [WITH ADVANCED KEYLESS SYSTEM]) (See 09–14–28 IMMOBILIZER SYSTEM COMPONENT REPLACEMENT/KEY ADDITION AND CLEARING [WITH ADVANCED KEYLESS SYSTEM]) (See 09–14–39 SECURITY ACCESS PROCEDURE)

DTC B1133 [ADVANCED KEYLESS SYSTEM]

E6U090267000W24

DTC B1133	Keyless antenna (front driver's door)
DETECTION CONDITION	Keyless antenna dose not operated.
POSSIBLE CAUSE	• Keyless antenna (front driver's door) malfunction • Open or short circuit in wiring harness between keyless control module and keyless antenna • Keyless control module malfunction

KEYLESS ANTENNA HARNESS SIDE CONNECTOR



KEYLESS CONTROL MODULE HARNESS SIDE CONNECTOR

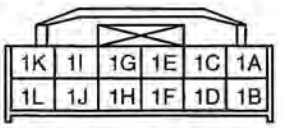



Diagnostic procedure

STEP	INSPECTION		ACTION
1	**INSPECT COMMUNICATION CIRCUIT FOR CONTINUITY** • Disconnect keyless control module connector and keyless antenna (driver's door) connector. • Inspect the continuity between the following connector terminals. — keyless control module: 1A—keyless antenna: A — keyless control module: 1B—keyless antenna: B • Is there continuity?	Yes	• Replace keyless antenna (driver's door). (See 09–14–19 KEYLESS ANTENNA REMOVAL/ INSTALLATION) • Go to next step.
		No	• Repair the wiring harness between the keyless antenna (driver's door) and keyless control module. • Go to next step.
2	**INSPECT KEYLESS CONTROL MODULE** • Turn the ignition switch to the ON position. • Is the DTC displayed? — WDS or equivalent: B1133	Yes	Replace the keyless control module and perform the resetting procedure for the advanced keyless system when replacing the keyless control module. (See 09–14–12 KEYLESS CONTROL MODULE REMOVAL/INSTALLATION [WITH ADVANCED KEYLESS SYSTEM].) (See 09–14–15 CARD KEY ID CODE REGISTRATION [WITH ADVANCED KEYLESS SYSTEM]) (See 09–14–17 STEERING LOCK UNIT ID CODE REGISTRATION [WITH ADVANCED KEYLESS SYSTEM]) (See 09–14–17 KEYLESS CONTROL MODULE CONFIGURATION [WITH ADVANCED KEYLESS SYSTEM]) (See 09–14–28 IMMOBILIZER SYSTEM COMPONENT REPLACEMENT/KEY ADDITION AND CLEARING [WITH ADVANCED KEYLESS SYSTEM]) (See 09–14–39 SECURITY ACCESS PROCEDURE)
		No	DTC troubleshooting completed.

DTC B1132 [ADVANCED KEYLESS SYSTEM]

E6U090267000W25

DTC B1132	Keyless antenna (front passenger's door)
DETECTION CONDITION	Keyless antenna dose not operated.
POSSIBLE CAUSE	• Keyless antenna (front passenger's door) malfunction • Open or short circuit in wiring harness between keyless control module and keyless antenna • Keyless control module malfunction

KEYLESS ANTENNA HARNESS SIDE CONNECTOR



KEYLESS CONTROL MODULE HARNESS SIDE CONNECTOR

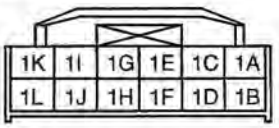



Diagnostic procedure

STEP	INSPECTION		ACTION
1	**INSPECT COMMUNICATION CIRCUIT FOR CONTINUITY** • Disconnect keyless control module connector and keyless antenna (front passenger's door) connector. • Inspect the continuity between the following connector terminals. — keyless control module: 1C—keyless antenna: A — keyless control module: 1D—keyless antenna: B • Is there continuity?	Yes	• Replace keyless antenna (front passenger's door). (See 09–14–19 KEYLESS ANTENNA REMOVAL/INSTALLATION) • Go to next step.
		No	• Repair the wiring harness between the keyless antenna (front passenger's door) and keyless control module. • Go to next step.
2	**INSPECT KEYLESS CONTROL MODULE** • Turn the ignition switch to the ON position. • Is the DTC displayed? — WDS or equivalent: B1132	Yes	Replace the keyless control module and perform the resetting procedure for the advanced keyless system when replacing the keyless control module. (See 09–14–12 KEYLESS CONTROL MODULE REMOVAL/INSTALLATION [WITH ADVANCED KEYLESS SYSTEM].) (See 09–14–15 CARD KEY ID CODE REGISTRATION [WITH ADVANCED KEYLESS SYSTEM]) (See 09–14–17 STEERING LOCK UNIT ID CODE REGISTRATION [WITH ADVANCED KEYLESS SYSTEM]) (See 09–14–17 KEYLESS CONTROL MODULE CONFIGURATION [WITH ADVANCED KEYLESS SYSTEM]) (See 09–14–28 IMMOBILIZER SYSTEM COMPONENT REPLACEMENT/KEY ADDITION AND CLEARING [WITH ADVANCED KEYLESS SYSTEM]) (See 09–14–39 SECURITY ACCESS PROCEDURE)
		No	DTC troubleshooting completed.

DTC B1127 [ADVANCED KEYLESS SYSTEM]

E6U090267000W26

DTC B1127	Keyless antenna (interior, rear)
DETECTION CONDITION	Keyless antenna dose not operated.
POSSIBLE CAUSE	• Keyless antenna (interior, rear) malfunction • Open or short circuit in wiring harness between keyless control module and keyless antenna • Keyless control module malfunction

KEYLESS ANTENNA HARNESS SIDE CONNECTOR



KEYLESS CONTROL MODULE HARNESS SIDE CONNECTOR

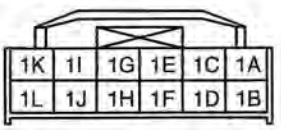



Diagnostic procedure

STEP	INSPECTION		ACTION
1	**INSPECT COMMUNICATION CIRCUIT FOR CONTINUITY** • Disconnect keyless control module connector and keyless antenna (interior, rear) connector. • Inspect the continuity between the following connector terminals. — keyless control module: 1G—keyless antenna: A — keyless control module: 1H—keyless antenna: B • Is there continuity?	Yes	• Replace keyless antenna (interior, RR). (See 09–14–19 KEYLESS ANTENNA REMOVAL/ INSTALLATION) • Go to next step.
		No	• Repair the wiring harness between the keyless antenna (interior, rear) and keyless control module. • Go to next step.
2	**INSPECT KEYLESS CONTROL MODULE** • Turn the ignition switch to the ON position. • Is the DTC displayed? — WDS or equivalent: B1127	Yes	Replace the keyless control module and perform the resetting procedure for the advanced keyless system when replacing the keyless control module. (See 09–14–12 KEYLESS CONTROL MODULE REMOVAL/INSTALLATION [WITH ADVANCED KEYLESS SYSTEM].) (See 09–14–15 CARD KEY ID CODE REGISTRATION [WITH ADVANCED KEYLESS SYSTEM]) (See 09–14–17 STEERING LOCK UNIT ID CODE REGISTRATION [WITH ADVANCED KEYLESS SYSTEM]) (See 09–14–17 KEYLESS CONTROL MODULE CONFIGURATION [WITH ADVANCED KEYLESS SYSTEM]) (See 09–14–28 IMMOBILIZER SYSTEM COMPONENT REPLACEMENT/KEY ADDITION AND CLEARING [WITH ADVANCED KEYLESS SYSTEM]) (See 09–14–39 SECURITY ACCESS PROCEDURE)
		No	DTC troubleshooting completed.

DELETE

E6U090267000W27

delete

DTC B1131 [ADVANCED KEYLESS SYSTEM]

E6U090267000W28

DTC B1131	Keyless antenna (exterior, rear)
DETECTION CONDITION	Keyless antenna dose not operated.
POSSIBLE CAUSE	• Keyless antenna (exterior, rear) malfunction • Open or short circuit in wiring harness between keyless control module and keyless antenna • Keyless control module malfunction

KEYLESS ANTENNA HARNESS SIDE CONNECTOR



KEYLESS CONTROL MODULE HARNESS SIDE CONNECTOR

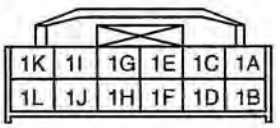



Diagnostic procedure

STEP	INSPECTION		ACTION
1	**INSPECT COMMUNICATION CIRCUIT FOR CONTINUITY** • Disconnect keyless control module connector and keyless antenna (exterior, rear) connector. • Inspect the continuity between the following connector terminals. — keyless control module: 1E—keyless antenna: A — keyless control module: 1F—keyless antenna: B • Is there continuity?	Yes	• Replace keyless antenna (liftgate). (See 09–14–19 KEYLESS ANTENNA REMOVAL/ INSTALLATION) • Go to next step.
		No	• Repair the wiring harness between the keyless antenna (exterior, rear) and keyless control module. • Go to next step.
2	**INSPECT KEYLESS CONTROL MODULE** • Turn the ignition switch to the ON position. • Is the DTC displayed? — WDS or equivalent: B1131	Yes	Replace the keyless control module and perform the resetting procedure for the advanced keyless system when replacing the keyless control module. (See 09–14–12 KEYLESS CONTROL MODULE REMOVAL/INSTALLATION [WITH ADVANCED KEYLESS SYSTEM].) (See 09–14–15 CARD KEY ID CODE REGISTRATION [WITH ADVANCED KEYLESS SYSTEM]) (See 09–14–17 STEERING LOCK UNIT ID CODE REGISTRATION [WITH ADVANCED KEYLESS SYSTEM]) (See 09–14–17 KEYLESS CONTROL MODULE CONFIGURATION [WITH ADVANCED KEYLESS SYSTEM]) (See 09–14–28 IMMOBILIZER SYSTEM COMPONENT REPLACEMENT/KEY ADDITION AND CLEARING [WITH ADVANCED KEYLESS SYSTEM]) (See 09–14–39 SECURITY ACCESS PROCEDURE)
		No	DTC troubleshooting completed.

DTC B1129 [ADVANCED KEYLESS SYSTEM]

E6U090267000W29

DTC B1129	Keyless antenna (interior, middle)
DETECTION CONDITION	Keyless antenna dose not operated.
POSSIBLE CAUSE	• Keyless antenna (interior, middle) malfunction • Open or short circuit in wiring harness between keyless control module and keyless antenna • Keyless control module malfunction

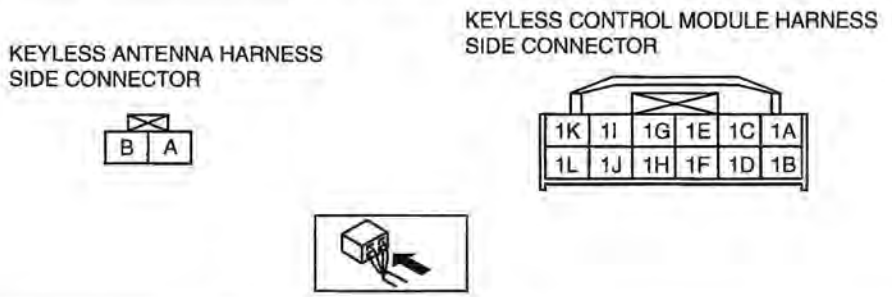

Diagnostic procedure

STEP	INSPECTION		ACTION
1	**INSPECT COMMUNICATION CIRCUIT FOR CONTINUITY** • Disconnect keyless control module connector and keyless antenna (interior, middle) connector. • Inspect the continuity between the following connector terminals. — keyless control module: 1K—keyless antenna: A — keyless control module: 1L—keyless antenna: B • Is there continuity?	Yes	• Replace keyless antenna (interior, front). (See 09–14–19 KEYLESS ANTENNA REMOVAL/ INSTALLATION) • Go to next step.
		No	• Repair the wiring harness between the keyless antenna (interior, middle) and keyless control module. • Go to next step.
2	**INSPECT KEYLESS CONTROL MODULE** • Turn the ignition switch to the ON position. • Is the DTC displayed? — WDS or equivalent: B1129	Yes	Replace the keyless control module and perform the resetting procedure for the advanced keyless system when replacing the keyless control module. (See 09–14–12 KEYLESS CONTROL MODULE REMOVAL/INSTALLATION [WITH ADVANCED KEYLESS SYSTEM].) (See 09–14–15 CARD KEY ID CODE REGISTRATION [WITH ADVANCED KEYLESS SYSTEM]) (See 09–14–17 STEERING LOCK UNIT ID CODE REGISTRATION [WITH ADVANCED KEYLESS SYSTEM]) (See 09–14–17 KEYLESS CONTROL MODULE CONFIGURATION [WITH ADVANCED KEYLESS SYSTEM]) (See 09–14–28 IMMOBILIZER SYSTEM COMPONENT REPLACEMENT/KEY ADDITION AND CLEARING [WITH ADVANCED KEYLESS SYSTEM]) (See 09–14–39 SECURITY ACCESS PROCEDURE)
		No	DTC troubleshooting completed.

DTC B112A [ADVANCED KEYLESS SYSTEM]

E6U090267000W30

DTC B1129	Keyless antenna (interior, front)
DETECTION CONDITION	Keyless antenna dose not operated.
POSSIBLE CAUSE	• Keyless antenna (interior, front) malfunction • Open or short circuit in wiring harness between keyless control module and keyless antenna • Keyless control module malfunction

KEYLESS ANTENNA HARNESS SIDE CONNECTOR



KEYLESS CONTROL MODULE HARNESS SIDE CONNECTOR

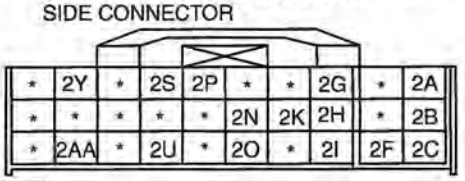



Diagnostic procedure

STEP	INSPECTION		ACTION
1	**INSPECT COMMUNICATION CIRCUIT FOR CONTINUITY** • Disconnect keyless control module connector and keyless antenna (interior, front) connector. • Inspect the continuity between the following connector terminals. — keyless control module: 2G—keyless antenna: A — keyless control module: 2H—keyless antenna: B • Is there continuity?	Yes	• Replace keyless antenna (interior, front). (See 09–14–19 KEYLESS ANTENNA REMOVAL/ INSTALLATION) • Go to next step.
		No	• Repair the wiring harness between the keyless antenna (interior, front) and keyless control module. • Go to next step.
2	**INSPECT KEYLESS CONTROL MODULE** • Turn the ignition switch to the ON position. • Is the DTC displayed? — WDS or equivalent: B112A	Yes	Replace the keyless control module and perform the resetting procedure for the advanced keyless system when replacing the keyless control module. (See 09–14–12 KEYLESS CONTROL MODULE REMOVAL/INSTALLATION [WITH ADVANCED KEYLESS SYSTEM].) (See 09–14–15 CARD KEY ID CODE REGISTRATION [WITH ADVANCED KEYLESS SYSTEM]) (See 09–14–17 STEERING LOCK UNIT ID CODE REGISTRATION [WITH ADVANCED KEYLESS SYSTEM]) (See 09–14–17 KEYLESS CONTROL MODULE CONFIGURATION [WITH ADVANCED KEYLESS SYSTEM]) (See 09–14–28 IMMOBILIZER SYSTEM COMPONENT REPLACEMENT/KEY ADDITION AND CLEARING [WITH ADVANCED KEYLESS SYSTEM]) (See 09–14–39 SECURITY ACCESS PROCEDURE)
		No	DTC troubleshooting completed.

09–02D ON-BOARD DIAGNOSTIC [AUDIO]

STARTING PROCEDURE FOR ON-BOARD DIAGNOSTIC TEST MODE 09–02D–1
SUPPLIER IDENTIFICATION PROCEDURE 09–02D–2
Identification Using the Label or Inscribed Lettering 09–02D–2
Identification Using the On-board Diagnostic Test Mode 09–02D–2
MEMORY CLEARING PROCEDURE 09–02D–2
DTC TABLE [AUDIO SYSTEM] 09–02D–3
DTC 16:ER12 ..... 09–02D–4
DTC 17:ER11 ..... 09–02D–4
DTC 18:ER11 ..... 09–02D–5
DTC 19:ER11 ..... 09–02D–5
DIAGNOSTIC ASSIST FUNCTION 09–02D–5
Structural View 09–02D–5
Button Inspection 09–02D–6
Speaker Inspection 09–02D–6
Radio Reception Condition Inspection 09–02D–6

STARTING PROCEDURE FOR ON-BOARD DIAGNOSTIC TEST MODE

E6U090266900W10

Note
- All DTCs displayed in the on-board diagnostic test mode should be entered in the Audio Repair Order Form.

1. Turn the ignition switch to the ACC or ON position.
2. Turn the POWER switch off.
3. While pressing the POWER button, simultaneously press the FM1/2 button and the MEDIA button for **2 s or more**.

Note
- If several DTCs are in the memory, they can be displayed using the SEEK button.

4. To stop the on-board diagnostic test mode, turn the ignition switch off.

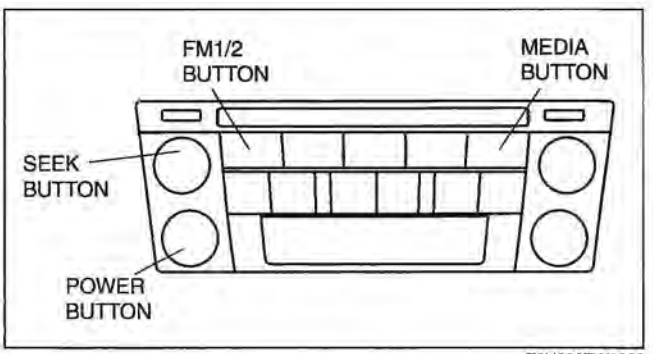

E6U920ZW5006

SUPPLIER IDENTIFICATION PROCEDURE

E6U090266900W11

Note
- The supplier can vary with the module. When asking the supplier (service center) for repair or replacement, identify the supplier and fill in the Audio Repair Order Form with the following procedures.

Identification Using the Label or Inscribed Lettering

1. Remove the audio unit.
2. Verify the supplier by referring to the label attached to each unit.

Identification Using the On-board Diagnostic Test Mode.

1. Start the on-board diagnostic test mode.
2. Identify the device and supplier codes by referring to the LCD display.

Note
- If no DTC is stored, no codes will be displayed.

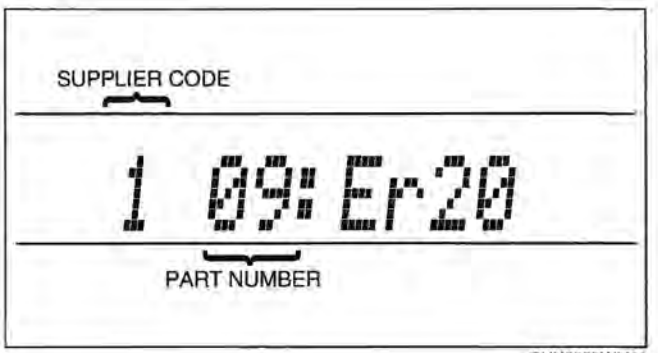

CHU0902WM02

Supplier code	Supplier name
1	SANYO Automedia
2	Panasonic
3	CLARION
4	Pioneer

Part number	Part name
00	Cassette deck
03	CD player
05	CD changer (external)
06	CD changer (upper module)
09	Base unit
10	MP3 applicable CD player system
11	Sirius unit
16	CAN system
21	Center panel
22	MP3 applicable CD changer

MEMORY CLEARING PROCEDURE

E6U090266900W12

1. Start the on-board diagnostic test mode.
2. While pressing the POWER button, simultaneously press the AUDIO CONT button for **2 s or more**.

Caution
- **Before clearing the memory, be sure to enter all of the DTCs displayed in the on-board diagnostic test mode in the Audio Repair Order Form.**

3. To stop the on-board diagnostic test mode, turn the ignition switch off.

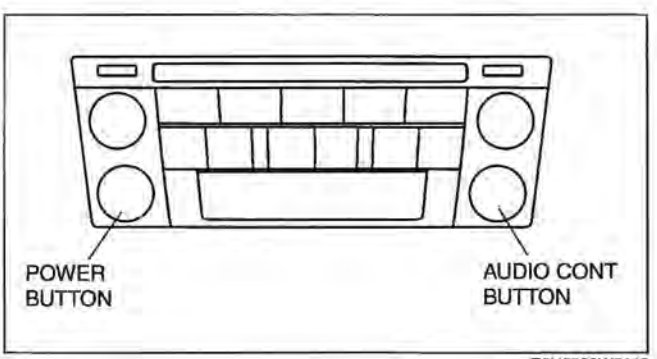

E6U0920W5113

DTC TABLE [AUDIO SYSTEM]

E6U090266900W13

Screen display DTC (When starting on-board diagnostic test function)	Detection condition	Possible cause/inspection
00: Er01	Cassette deck cannot implement insert and eject commands.	Cassette deck malfunction
00: Er03	Reel built into cassette deck does not operate.	Verify condition of the cassette deck.
00: Er04	Cassette tape is worn out.	• Tape wear • Verify condition of the cassette deck.
00: Er10	Cassette deck does not operate.	• Malfunction of connectors between base unit and cassette deck • Cassette deck malfunction
03: Er01	CD player cannot implement insert and eject commands.	CD player malfunction
03: Er02	Cannot change tracks.	CD player malfunction
03: Er07	CD reading error.	• Defective CD (scratches or dirt) • CD player malfunction
03: Er10	CD player does not operate.	• Malfunction of connectors between base unit and CD player • CD player malfunction
05: Er01	CD changer (external) cannot implement insert, eject, and disc change commands.	• Defective CD (curved, broken or foreign material stuck/attached, etc.) • CD changer (external) malfunction
05: Er07	CD reading error.	• Defective CD (curved, broken or foreign material stuck/attached, etc.) • CD changer (external) malfunction
05: Er10	CD changer (external) does not operate.	• Defective CD (curved, broken or foreign material stuck/attached, etc.) • CD changer (external) malfunction
06: Er01	CD changer (upper module) cannot implement insert, eject, and disc change commands.	• Defective CD (curved, broken or foreign material stuck/attached, etc.) • CD changer (upper module) malfunction
06: Er02	Cannot change tracks.	• Defective CD (curved, broken or foreign material stuck/attached, etc.) • CD changer (upper module) malfunction
06: Er07	CD reading error.	• Defective CD (curved, broken or foreign material stuck/attached, etc.) • CD changer (upper module) malfunction
06: Er10	CD changer (upper module) does not operate.	• Malfunction of connectors between base unit and CD changer (upper module) • CD changer (upper module) malfunction
07: Er01	MD player cannot implement insert and eject commands.	MD player malfunction
07: Er02	Cannot change tracks.	MD player malfunction
07: Er07	MD reading error.	Defective MD
07: Er08	Blank unrecorded MD is inserted.	Defective MD
07: Er10	MD player does not operate.	• Malfunction of connectors between base unit and MD player • MD player malfunction
09: Er20	Audio system does not operate.	Voltage at base unit is low.
09: Er21	Broken sound/No sound	Inspect the audio system operation according to vehicle condition.
09: Er22	No radio reception	Inspect the radio operation according to vehicle condition.
10: Er01	MP3 applicable CD player cannot implement insert and eject commands.	MP3 applicable CD player malfunction
10: Er02	Cannot change tracks.	MP3 applicable CD player malfunction
10: Er07	MP3 CD reading error.	Incorrect format CD

Screen display DTC (When starting on-board diagnostic test function)	Detection condition	Possible cause/inspection
10: Er10	MP3 applicable CD player does not operate.	• Malfunction of connectors between base unit and MP3 applicable CD player • MP3 applicable CD player malfunction
11: Er01	SSI bus communication error	• Poor connection of the connectors • Radio unit malfunction • Sirius unit malfunction
11: Er03	Poor connection of antenna	• Poor connection of antenna connector
11: Er10	Radio system does not operate.	• Malfunction of connectors between base unit and Sirius unit • Sirius unit malfunction
16: Er12	—	CAN system
21: Er17	Incorrect combination (base unit and center panel)	Install the correct base unit or the center panel.
21: Er18		
21: Er19	Communication error between base unit and center panel	Malfunction of connectors between base unit and center panel
22: Er01	MP3 applicable CD changer cannot implement insert, eject, and disc change commands.	• Defective CD (curved, broken or foreign material stuck/attached, etc.) • MP3 applicable CD changer malfunction
22: Er02	Cannot change tracks.	• Defective CD (curved, broken or foreign material stuck/attached, etc.) • MP3 applicable CD changer malfunction
22: Er07	CD reading error.	• Defective CD (curved, broken or foreign material stuck/attached, etc.) • MP3 applicable CD changer malfunction
22: Er10	MP3 applicable CD changer does not operate.	• Malfunction of connectors between base unit and MP3 applicable CD changer • MP3 applicable CD changer malfunction
no Err	No DTCs stored	No DTCs stored

DTC 16:ER12

E6U090266900W14

DTC 16:Er12	CAN system communication error
DETECTION CONDITION	• CAN system communication error
POSSIBLE CAUSE	• Malfunction of wiring harness between base unit and other CAN system related module • Audio unit malfunction

Diagnostic procedure

ACTION
(See09–02A–2 MULTIPLEX COMMUNICATION SYSTEM [L3, AJ].) (See09–02B–2 MULTIPLEX COMMUNICATION SYSTEM [L3 WITH TC].)

DTC 17:ER11

E6U090266900W15

DTC 17:Er11	CAN system communication error
DETECTION CONDITION	• ALC function does not operate.
POSSIBLE CAUSE	• Malfunction of wiring harness between base unit and other CAN system related module • CAN system related module malfunction

Diagnostic procedure

ACTION
(See09–02A–2 MULTIPLEX COMMUNICATION SYSTEM [L3, AJ].) (See09–02B–2 MULTIPLEX COMMUNICATION SYSTEM [L3 WITH TC].)

DTC 18:ER11

E6U090266900W16

DTC 18:Er11	CAN system communication error
DETECTION CONDITION	• CAN system communication error
POSSIBLE CAUSE	• Malfunction of wiring harness between base unit and other CAN system related module • CAN system related module malfunction

Diagnostic procedure

ACTION
(See09–02A–2 MULTIPLEX COMMUNICATION SYSTEM [L3, AJ].) (See09–02B–2 MULTIPLEX COMMUNICATION SYSTEM [L3 WITH TC].)

DTC 19:ER11

E6U090266900W17

DTC 18:Er11	CAN system communication error
DETECTION CONDITION	• CAN system communication error
POSSIBLE CAUSE	• Malfunction of wiring harness between base unit and other CAN system related module • CAN system related module malfunction

Diagnostic procedure

ACTION
(See09–02A–2 MULTIPLEX COMMUNICATION SYSTEM [L3, AJ].) (See09–02B–2 MULTIPLEX COMMUNICATION SYSTEM [L3 WITH TC].)

DIAGNOSTIC ASSIST FUNCTION

E6U090266900W18

09–02D

Structural View
Buttons

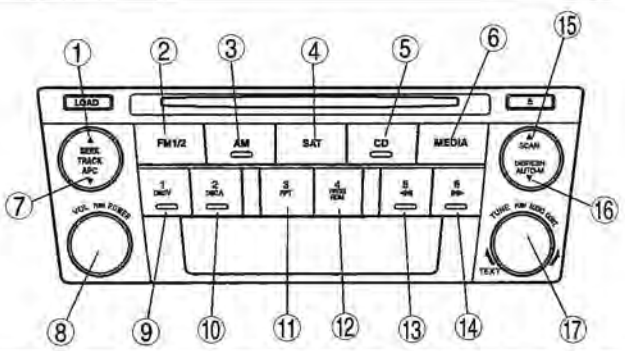

E6U0920W5112

1	SEEK button (upper)
2	FM1/2 button
3	AM button
4	SAT button
5	CD button
6	MEDIA button
7	APC button (lower)
8	POWER/VOLUME button
9	Preset button "1"

10	Preset button "2"
11	Preset button "3"
12	Preset button "4"
13	Preset button "5"
14	Preset button "6"
15	SCAN button
16	AUTO-M button
17	AUDIO CONT/TUNE/TEXT button

Button Inspection

1. With the audio power on, press the POWER button and simultaneously press the MEDIA button for **approx. 1 s.**
2. Inspect according to the following table:

INSPECTION	DISPLAY	ACTION	
• Start the button inspection mode. • Press all buttons.	—	The buzzer sounds.	The button is normal.
		The buzzer does not sound.	Replace the base unit.

3. Turn the audio off or the ignition switch to the LOCK position to stop the diagnostic assist function.

Speaker Inspection

1. With the audio power on, press the POWER button and simultaneously press the AUTO-M button for **approx. 1 s.**
2. Inspect according to the following table:

INSPECTION	DISPLAY	ACTION	
• Start the speaker inspection mode. • Does each speaker output sound in the following order? 1. Front door speaker and tweeter (LH) 2. Front door speaker and tweeter (RH) 3. Rear speaker (RH) 4. Rear speaker (LH)	—	Yes	Speakers, and wiring harness between the base unit and speakers are normal.
		No	• Inspect the following parts. — Malfunctioning speaker — Wiring harness between base unit and malfunctioning speaker

3. Turn the audio off or the ignition switch to the LOCK position to stop the diagnostic assist function.

Radio Reception Condition Inspection

1. With the audio power on, press the POWER button and simultaneously press the PRESET 2 button for **approx. 1 s.**
2. Inspect according to the following table:

Caution

- **Even if the system is normal, radio reception may be difficult depending on where the system is inspected (indoors/outdoors, or conditions at the location). Before inspecting the system, verify that radio reception is adequate.**
- **When inspecting, select a frequency band (radio station) with the best reception.**

INSPECTION	DISPLAY	ACTION
Start the radio reception condition inspection mode.	NORMAL CONDITION S-METER 5 | S-METER 9	Antenna, antenna feeder and base unit are normal.
	S-METER 3 | S-METER 4	Change the frequency (radio station) and inspect again.
	MALFUNCTION PRESENT S-METER 0 | S-METER 2	Inspect the antenna and antenna feeder. • If either the antenna or the antenna feeder is not normal, replace the malfunctioning part. • If the antenna and antenna feeder are normal, replace the base unit.

3. Turn the audio off or the ignition switch to the LOCK position to stop the diagnostic assist function.

09–02E ON-BOARD DIAGNOSTIC [IMMOBILIZER SYSTEM (WITH ADVANCED KEYLESS SYSTEM)]

FOREWORD [IMMOBILIZER SYSTEM (ADVANCED KEYLESS SYSTEM)] ... 09–02E–2
Structural View 09–02E–2
PID/Data Monitor and Record Procedure 09–02E–3
DTC TABLE [IMMOBILIZER SYSTEM (ADVANCED KEYLESS SYSTEM)] ... 09–02E–3
PID/DATA MONITOR TABLE [IMMOBILIZER SYSTEM] 09–02E–4
SECURITY LIGHT: DTC 11 (WDS OR EQUIVALENT: DTC -/B1681) 09–02E–4
SECURITY LIGHT: DTC 11 (WDS OR EQUIVALENT: DTC B1681/B1681) 09–02E–5
SECURITY LIGHT: DTC 12 (WDS OR EQUIVALENT: DTC B2103/B2103) 09–02E–6
SECURITY LIGHT: DTC 13 (WDS OR EQUIVALENT: DTC -/B1600) 09–02E–6
SECURITY LIGHT: DTC 13 (WDS OR EQUIVALENT: DTC -/B2431) 09–02E–7
SECURITY LIGHT: DTC 14 (WDS OR EQUIVALENT: DTC -/B1602) 09–02E–8
SECURITY LIGHT: DTC 15 (WDS OR EQUIVALENT: DTC -/B1601) 09–02E–9
SECURITY LIGHT: DTC 15 (WDS OR EQUIVALENT: DTC B1342/B1601) 09–02E–10
SECURITY LIGHT: DTC 21 (WDS OR EQUIVALENT: DTC B1213/B1213) 09–02E–10

FOREWORD [IMMOBILIZER SYSTEM (ADVANCED KEYLESS SYSTEM)]

E6U090267000W31

Structural View

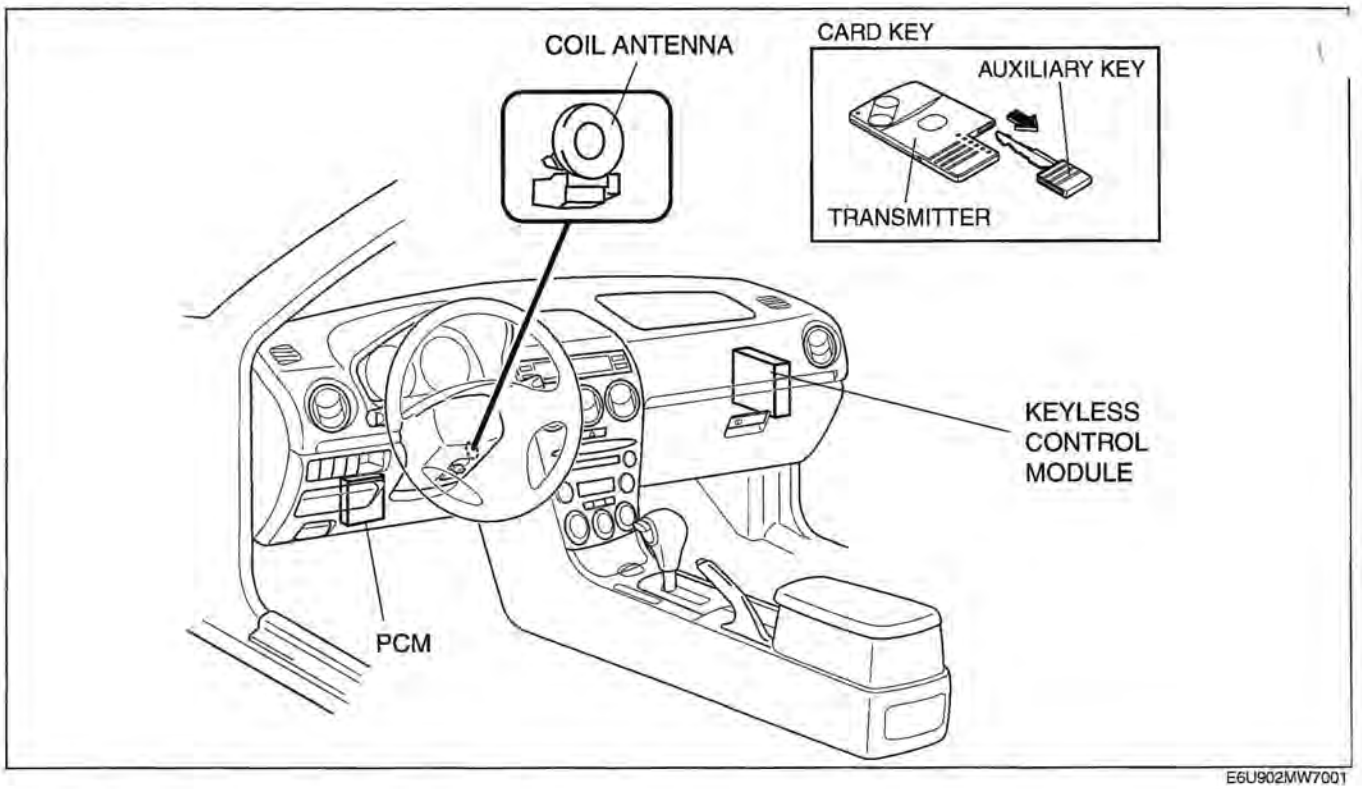

E6U902MW7001

Caution

- **When the engine does not start or stalls and the following DTCs are not indicated, refer to engir symptom troubleshooting. (See 01–03B–18 NO.3 WILL NOT CRANK [L3 WITH TC])**

Note

- When the immobilizer system is defective, the engine cannot be started.
- If engine condition is normal but security light stays on, inspect for short circuit between security light. Repair or replace the wiring harness if necessary.
- The vehicle may fail to start or a DTC may be stored in the keyless control module and PCM if the following occurs:
  - — If a large, metal object is close to a valid key
  - — If an electrical device is close to a valid key
  - — If two or more valid keys are on the same key ring
- If any malfunction cannot be identified, verify that no metal object or electrical device is on the key ring.
- The security light repeatedly displays a DTC 10 times when the ignition switch is in the ON position.

1. Turn the ignition switch to the ON position.
   - If there is any malfunction, the security light flashes rapidly for **approx. 1 minute** and starts displaying a DTC.
   - If there is no malfunction, the security light illuminates for **approx. 3 seconds** and goes off.
2. Verify the security light condition and read the DTC according to security light flashing pattern.
3. Connect the **SST** (WDS or equivalent) to the vehicle DLC-2 16-pin connector.
4. Verify the DTC with the **SST** (WDS or equivalent).
5. If a DTC is indicated, perform on-board diagnostic referring to the DTC table.

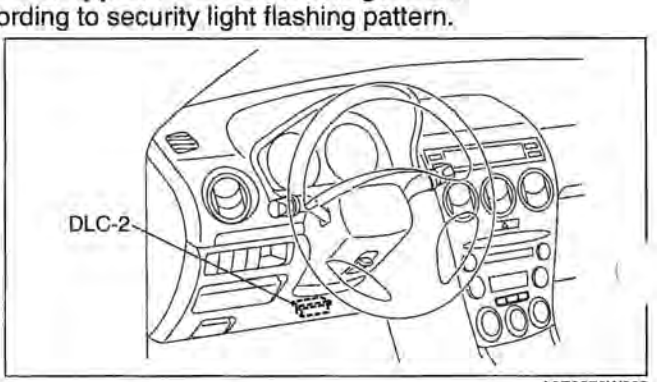

A6E3970W002

PID/Data Monitor and Record Procedure

1. Connect the **SST** (WDS or equivalent) to the vehicle DLC-2 16-pin connector.
   Access and monitor PIDs using the **SST** (WDS or equivalent).

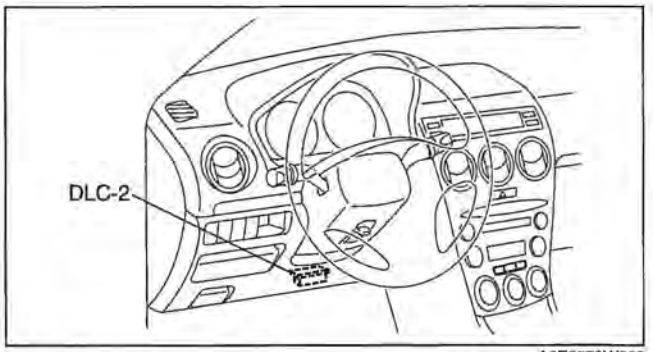

A6E3970W002

DTC TABLE [IMMOBILIZER SYSTEM (ADVANCED KEYLESS SYSTEM)]

E6U090267000W32

DTC					Description	Page
Security light	Security light flashing pattern	Keyless warning light	WDS or equivalent: Keyless control module	WDS or equivalent: PCM		
11		Not illuminated	—	B1681	Communication error between the keyless control module and the PCM.	(See 09–02E–4 SECURITY LIGHT: DTC 11 (WDS OR EQUIVALENT: DTC -/B1681))
		Illuminated	B1681	B1681	Communication error between the keyless control module and the coil antenna.	(See 09–02E–5 SECURITY LIGHT: DTC 11 (WDS OR EQUIVALENT: DTC B1681/B1681))
12		Illuminated	B2103	B2103	Coil Antenna failure.	(See 09–02E–6 SECURITY LIGHT: DTC 12 (WDS OR EQUIVALENT: DTC B2103/B2103))
13		Not illuminated	—	B1600	ID number signal is not received.	(See 09–02E–6 SECURITY LIGHT: DTC 13 (WDS OR EQUIVALENT: DTC -/B1600))
			—	B2431	ID number signal is not received.	(See 09–02E–7 SECURITY LIGHT: DTC 13 (WDS OR EQUIVALENT: DTC -/B2431))
14		Not illuminated	—	B1602	PCM received invalid format of ID number from transponder.	(See 09–02E–8 SECURITY LIGHT: DTC 14 (WDS OR EQUIVALENT: DTC -/B1602))
15		Not illuminated	—	B1601	PCM received incorrect ID number from key (transponder).	(See 09–02E–9 SECURITY LIGHT: DTC 15 (WDS OR EQUIVALENT: DTC -/B1601))
		Illuminated	B1342	B1601	Keyless control module malfunction.	(See 09–02E–10 SECURITY LIGHT: DTC 15 (WDS OR EQUIVALENT: DTC B1342/B1601))
21	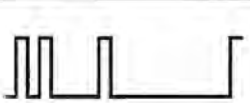	Not illuminated	B1213	B1213	Number of valid keys is below minimum. (PCM)	(See 09–02E–10 SECURITY LIGHT: DTC 21 (WDS OR EQUIVALENT: DTC B1213/B1213))

DTC					Description	Page
Security light	Security light flashing pattern	Keyless warning light	WDS or equivalent			
			Keyless control module	PCM		
—	—	Illuminated	B1213	—	Number of valid keys is below minimum. (keyless control module)	(See 09–02E–10 SECURITY LIGHT: DTC 21 (WDS OR EQUIVALENT: DTC B1213/B1213))
—	—	Illuminated	U0073	U0073	CAN system malfunction.	(See 09–02B–2 MULTIPLEX COMMUNICATION SYSTEM [L3 WITH TC])
—	—	Not illuminated	U0323 U0100 U2023	U0323 U0100 U2023	CAN system malfunction.	(See 09–02B–2 MULTIPLEX COMMUNICATION SYSTEM [L3 WITH TC])

Note

- Perform the following if the security light stays on:
  - — If engine stalls, go to symptom troubleshooting NO.11 "ENGINE STALLS/QUITS, ENGINE RUNS ROUGH, MISSES, BUCK/JERK, HESITATION/STUMBLE, SURGES" in. (See 01–03B–43 NO.11 ENGINE STALLS/QUITS, ENGINE RUNS ROUGH, MISSES, BUCK/JERK, HESITATION/STUMBLE, SURGES [L3 WITH TC].)
  - — If engine won't start, go to symptom troubleshooting NO.6 "CRANKS NORMALLY BUT WILL NOT START" in. (See 01–03B–29 NO.6 CRANKS NORMALLY BUT WILL NOT START [L3 WITH TC].)

PID/DATA MONITOR TABLE [IMMOBILIZER SYSTEM]

E6U090267000

PID name (Description)	Unit	Specification	PCM terminal
NUMKEYS (Number of key stored in module)	–	Number of registered keys: 0—8	–

SECURITY LIGHT: DTC 11 (WDS OR EQUIVALENT: DTC -/B1681)

E6U090267000W34

DTC 11 (-/B1681)	Communication error between the keyless control module and the PCM.
POSSIBLE CAUSE	• Defective keyless control module • Defective PCM • Defective wiring harness

PCM HARNESS SIDE CONNECTOR

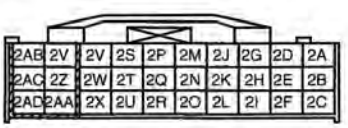

KEYLESS CONTROL MODULE WIRING HARNESS SIDE CONNECTOR

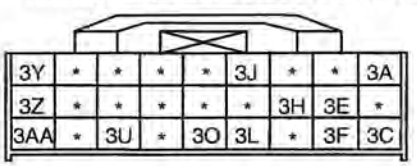

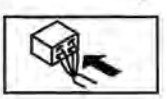

Diagnostic procedure

STEP	INSPECTION		ACTION
1	**INSPECT COMMUNICATION CIRCUIT FOR CONTINUITY** • Disconnect keyless control module and PCM connectors. • Is there continuity between the following terminals? — 3A—2Q — 3C—2T	Yes	Replace keyless control module, then go to the next step. (See 09–14–12 KEYLESS CONTROL MODULE REMOVAL/INSTALLATION [WITH ADVANCED KEYLESS SYSTEM])
		No	Repair the wiring harness between the keyless control module and PCM, then go to the next step.
2	**INSPECT KEYLESS CONTROL MODULE** • Turn the ignition switch to the ON position. • Is the DTC displayed? — Security light: 11 — WDS or equivalent: -/B1681	Yes	Replace PCM and reprogram immobilizer system.
		No	DTC troubleshooting completed.

SECURITY LIGHT: DTC 11 (WDS OR EQUIVALENT: DTC B1681/B1681)

E6U090267000W35

DTC 11 (B1681/B1681)	**Communication error between the keyless control module and the coil antenna.**
POSSIBLE CAUSE	• Defective coil antenna • Defective keyless control module • Defective wiring harness

COIL ANTENNA HARNESS SIDE CONNECTOR

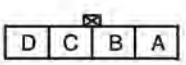



KEYLESS CONTROL MODULE WIRING HARNESS SIDE CONNECTOR

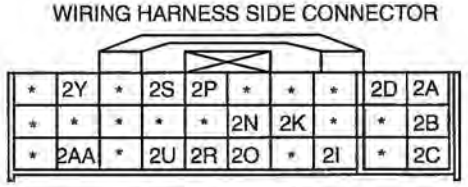



Diagnostic procedure

STEP	INSPECTION		ACTION
1	**INSPECT POWER SUPPLY CIRCUIT OF COIL ANTENNA** • Disconnect coil antenna connector. • Turn ignition switch to ON position. • Measure voltage at terminal D of coil antenna connector. • Is voltage **more than 8 V**?	Yes	Go to next step.
		No	Repair wiring harness.
2	**INSPECT WIRING HARNESS BETWEEN COIL ANTENNA AND GROUND** • Turn ignition switch to LOCK position. • Inspect wiring harness between coil antenna terminal C and ground for following. — Short to power supply — Open circuit • Is wiring harness okay?	Yes	Go to next step.
		No	Repair wiring harness.
3	**INSPECT COIL ANTENNA INPUT SIGNAL CIRCUIT** • Connect coil antenna connector. • Turn ignition switch to ON position. • Is there continuity between the following terminals? — 2Y—B — 2AA—A	Yes	Replace coil antenna, then go to the next step. (See 09–14–28 COIL REMOVAL/INSTALLATION)
		No	Repair wiring harness.
4	**INSPECT KEYLESS CONTROL MODULE** • Turn the ignition switch to the ON position. • Is the DTC displayed? — Security light: 11 — WDS or equivalent: B1681/B1681	Yes	Replace keyless control module, then go to the next step. (See 09–14–12 KEYLESS CONTROL MODULE REMOVAL/INSTALLATION [WITH ADVANCED KEYLESS SYSTEM])
		No	DTC troubleshooting completed.

SECURITY LIGHT: DTC 12 (WDS OR EQUIVALENT: DTC B2103/B2103)

E6U090267000W36

DTC 12 (B2103/B2103)	Coil Antenna failure.
POSSIBLE CAUSE	• Defective coil antenna • Poor connection of coil antenna connector • Defective keyless control module

Diagnostic procedure

STEP	INSPECTION		ACTION
1	**INSPECT CONNECTOR CONNECTION** • Is connector of coil antenna and keyless control module connected securely?	Yes	Replace coil antenna. (See 09–14–28 COIL REMOVAL/INSTALLATION)
		No	Connect connector securely.
2	**INSPECT KEYLESS CONTROL MODULE** • Turn the ignition switch to the ON position. • Is the DTC displayed? — Security light: 12 — WDS or equivalent: B2103/B2103	Yes	Replace keyless control module, then go to the next step. (See 09–14–12 KEYLESS CONTROL MODULE REMOVAL/INSTALLATION [WITH ADVANCED KEYLESS SYSTEM])
		No	DTC troubleshooting completed.

SECURITY LIGHT: DTC 13 (WDS OR EQUIVALENT: DTC -/B1600)

E6U090267000W37

DTC 13 (-/B1600)	ID number signal is not received.
POSSIBLE CAUSE	• No transponder in the key • Defective transponder in the key (ID number is not output.) • Defective coil antenna • Defective PCM • Defective keyless control module • Any of the following items are touching or near the key head. — Spare keys — Keys for other vehicles equipped with an immobilizer system — Any metallic object — Any electronic device, or any credit or other cards with magnetic strips

Diagnostic procedure

STEP	INSPECTION		ACTION
1	**VERIFY DTC USING SST** • Does **SST** (WDS or equivalent) indicate DTC -/B1600?	Yes	Go to Step 3.
		No	Go to the next step.
2	**VERIFY DTC USING SST** • Does **SST** (WDS or equivalent) indicate DTC -/B2431?	Yes	Go to SECURITY LIGHT: DTC 13 (WDS OR EQUIVALENT: -/B2431).
		No	Go to the next step.
3	**VERIFY VALID KEY** • Is there any key, other than the one that caused displayed DTC, which can start the engine?	Yes	Go to Step 5.
		No	Go to the next step.
4	**VERIFY WHETHER MALFUNCTION IS IN COIL ANTENNA OR KEY** • Using **SST** (WDS or equivalent) register an additional key. (See 09–14–28 IMMOBILIZER SYSTEM COMPONENT REPLACEMENT/KEY ADDITION AND CLEARING [WITH ADVANCED KEYLESS SYSTEM]) • Using registered key, turn ignition switch to ON position. • Does **SST** (WDS or equivalent) indicate DTC -/B1600 again?	Yes	Replace coil antenna, then go to step 6. (See 09–14–28 COIL REMOVAL/INSTALLATION)
		No	• Dispose of defective key. • Duplicate key if necessary. (See 09–14–28 IMMOBILIZER SYSTEM COMPONENT REPLACEMENT/KEY ADDITION AND CLEARING [WITH ADVANCED KEYLESS SYSTEM])
5	**VERIFY WHETHER MALFUNCTION IS IN COIL ANTENNA OR KEY** • Using any other valid key, turn ignition switch to ON position. • Does **SST** (WDS or equivalent) indicate DTC -/B1600 again?	Yes	Replace coil antenna, then go to next step. (See 09–14–28 COIL REMOVAL/INSTALLATION)
		No	• Dispose of defective key. • Duplicate key if necessary. (See 09–14–28 IMMOBILIZER SYSTEM COMPONENT REPLACEMENT/KEY ADDITION AND CLEARING [WITH ADVANCED KEYLESS SYSTEM])

STEP	INSPECTION		ACTION
6	**INSPECT PCM** • Using registered key, turn ignition switch to ON position. • Does **SST** (WDS or equivalent) indicate DTC -/B1600 again?	Yes	Replace PCM and reprogram immobilizer system. (See 09–14–28 IMMOBILIZER SYSTEM COMPONENT REPLACEMENT/KEY ADDITION AND CLEARING [WITH ADVANCED KEYLESS SYSTEM])
		No	DTC troubleshooting completed.

SECURITY LIGHT: DTC 13 (WDS OR EQUIVALENT: DTC -/B2431)

E6U090267000W38

DTC 13 (-/B2431)	**ID number signal is not received.**
POSSIBLE CAUSE	• The procedure fails to program the transponder into PCM • Any of the following items are touching or near the key head. — Spare keys — Keys for other vehicles equipped with an immobilizer system — Any metallic object — Any electronic device, or any credit or other cards with magnetic strips

Diagnostic procedure

STEP	INSPECTION		ACTION
1	**VERIFY DTC USING SST** • Does **SST** (WDS or equivalent) indicate DTC -/B2431?	Yes	Go to Step 3.
		No	Go to next step.
2	**VERIFY DTC USING SST** • Does **SST** (WDS or equivalent) indicate DTC -/B1600?	Yes	Go to SECURITY LIGHT: DTC 13 (WDS OR EQUIVALENT: -/B1600).
		No	Go to next step.
3	**INSPECT KEYLESS CONTROL MODULE** • Erase key ID number using **SST** (WDS or equivalent) and register key ID number. (See 09–14–28 IMMOBILIZER SYSTEM COMPONENT REPLACEMENT/KEY ADDITION AND CLEARING [WITH ADVANCED KEYLESS SYSTEM]) • Using registered key, turn ignition switch to ON position. • Does **SST** (WDS or equivalent) indicate DTC -/B2431 again?	Yes	Replace keyless control module, then go to the next step. (See 09–14–12 KEYLESS CONTROL MODULE REMOVAL/INSTALLATION [WITH ADVANCED KEYLESS SYSTEM])
		No	DTC troubleshooting completed.
4	**INSPECT PCM** • Using registered key, turn ignition switch to ON position. • Does **SST** (WDS or equivalent) indicate DTC -/B1600 again?	Yes	Replace PCM and reprogram immobilizer system. (See 09–14–28 IMMOBILIZER SYSTEM COMPONENT REPLACEMENT/KEY ADDITION AND CLEARING [WITH ADVANCED KEYLESS SYSTEM])
		No	DTC troubleshooting completed.

SECURITY LIGHT: DTC 14 (WDS OR EQUIVALENT: DTC -/B1602)

E6U090267000W39

DTC 14 (-/B1602)	PCM received invalid format of ID number from transponder.
POSSIBLE CAUSE	• Defective transponder in the key • Defective coil antenna • Defective PCM • Defective keyless control module • Any of the following items are touching or near the key head. — Spare keys — Keys for other vehicles equipped with an immobilizer system — Any metallic object — Any electronic device, or any credit or other cards with magnetic strips

Diagnostic procedure

STEP	INSPECTION		ACTION
1	**INSPECT FOR OTHER PROPER KEYS** • Using any other valid key, turn ignition switch to ON position. • If there are no other valid keys, then register an additional key using **SST** (WDS or equivalent) and turn ignition switch to ON position. (See 09–14–28 IMMOBILIZER SYSTEM COMPONENT REPLACEMENT/KEY ADDITION AND CLEARING [WITH ADVANCED KEYLESS SYSTEM]) • Does **SST** (WDS or equivalent) indicate DTC -/B1602 again?	Yes	Replace coil antenna, then go to next step. (See 09–14–28 COIL REMOVAL/INSTALLATION)
		No	• Dispose of defective key. • Duplicate key if necessary. (See 09–14–28 IMMOBILIZER SYSTEM COMPONENT REPLACEMENT/KEY ADDITION AND CLEARING [WITH ADVANCED KEYLESS SYSTEM])
2	**INSPECT KEYLESS CONTROL MODULE** • Turn the ignition switch to the ON position. • Is the DTC displayed? — Security light: 14 — WDS or equivalent: -/B1602	Yes	Replace keyless control module, then go to the next step. (See 09–14–12 KEYLESS CONTROL MODULE REMOVAL/INSTALLATION [WITH ADVANCED KEYLESS SYSTEM])
		No	DTC troubleshooting completed.

SECURITY LIGHT: DTC 15 (WDS OR EQUIVALENT: DTC -/B1601)

E6U090267000W40

DTC 15 (-/B1601)	PCM received incorrect ID number from key (transponder).
POSSIBLE CAUSE	• No keys have been registered after installation of new PCM • Unregistered key detected • Attempt made to register a ninth key **Note** • A maximum of only eight keys can be registered for a single vehicle. • Defective keyless control module • Defective PCM

COIL ANTENNA
HARNESS SIDE CONNECTOR

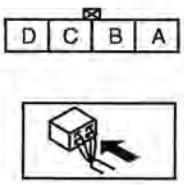

KEYLESS CONTROL MODULE
WIRING HARNESS SIDE CONNECTOR

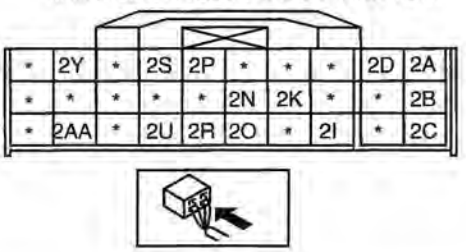

Diagnostic procedure

STEP	INSPECTION		ACTION
1	**VERIFY REGISTERED KEY IN PCM** • Check following PID/DATA monitor using **SST** (WDS or equivalent). — NUMKEYS • Is NUMKEYS displayed more than 2?	Yes	Go to next step.
		No	Go to Step 3.
2	**VERIFY REGISTERED KEY IN PCM** • Check following PID/DATA monitor using **SST** (WDS or equivalent). — NUMKEYS • Is NUMKEYS displayed more than 8?	Yes	• Erase key ID number using **SST** (WDS or equivalent) and register key ID number. (See 09–14–28 IMMOBILIZER SYSTEM COMPONENT REPLACEMENT/KEY ADDITION AND CLEARING [WITH ADVANCED KEYLESS SYSTEM]) • Go to next step.
		No	Go to next step.
3	**INSPECT COIL ANTENNA INPUT SIGNAL CIRCUIT** • Connect coil antenna connector. • Turn ignition switch to ON position. • Is there continuity between the following terminals? — 2Y—B — 2AA—A	Yes	Replace coil antenna, then go to the next step. (See 09–14–28 COIL REMOVAL/INSTALLATION)
		No	Repair wiring harness.
4	**INSPECT KEYLESS CONTROL MODULE** • Turn the ignition switch to the ON position. • Is the DTC displayed? — Security light: 15 — WDS or equivalent: -/B1601	Yes	Replace keyless control module, then go to the next step. (See 09–14–12 KEYLESS CONTROL MODULE REMOVAL/INSTALLATION [WITH ADVANCED KEYLESS SYSTEM])
		No	DTC troubleshooting completed.

SECURITY LIGHT: DTC 15 (WDS OR EQUIVALENT: DTC B1342/B1601)

E6U090267000W41

DTC 15 (B1342/B1601)	**Keyless control module malfunction.**
POSSIBLE CAUSE	• Defective keyless control module

Diagnostic procedure

STEP	INSPECTION		ACTION
1	**INSPECT KEYLESS CONTROL MODULE** • Turn the ignition switch to the ON position. • Is the DTC displayed? — Security light: 15 — WDS or equivalent: B1342/B1601	Yes	Replace keyless control module, then go to the next step. (See 09–14–12 KEYLESS CONTROL MODULE REMOVAL/INSTALLATION [WITH ADVANCED KEYLESS SYSTEM])
		No	DTC troubleshooting completed.

SECURITY LIGHT: DTC 21 (WDS OR EQUIVALENT: DTC B1213/B1213)

E6U090267000W42

DTC 21 (B1213/B1213)	**Number of valid keys is below minimum.**
POSSIBLE CAUSE	• Less than two valid keys

Diagnostic procedure

STEP	INSPECTION		ACTION
1	**VERIFY NUMBER OF VALID KEYS** • Check following PID/DATA monitor with **SST** (WDS or equivalent). — NUMKEYS • Is NUMKEYS displayed more than 2? **Note** • To start the engine, two or more keys need to be registered.	Yes	Replace PCM and reprogram immobilizer system. (See 09–14–28 IMMOBILIZER SYSTEM COMPONENT REPLACEMENT/KEY ADDITION AND CLEARING [WITH ADVANCED KEYLESS SYSTEM])
		No	• Erase key ID numbers and register necessary key ID numbers. • Go to next step.
2	**INSPECT KEYLESS CONTROL MODULE** • Turn the ignition switch to the ON position. • Is the DTC displayed? — Security light: 21 — WDS or equivalent: B1213	Yes	Replace PCM and reprogram immobilizer system. (See 09–14–28 IMMOBILIZER SYSTEM COMPONENT REPLACEMENT/KEY ADDITION AND CLEARING [WITH ADVANCED KEYLESS SYSTEM])
		No	DTC troubleshooting completed.

09–02F ON-BOARD DIAGNOSTIC [IMMOBILIZER SYSTEM (WITH KEYLESS ENTRY SYSTEM)]

PREWORD 09–02F–2
PID/Data Monitor and Record Procedure 09–02F–3
DTC TABLE [IMMOBILIZER SYSTEM] 09–02F–3
PID/DATA MONITOR TABLE [IMMOBILIZER SYSTEM] 09–02F–4
SECURITY LIGHT: DTC 11(WDS OR EQUIVALENT: DTC B1681) 09–02F–4
SECURITY LIGHT: DTC 12 (WDS OR EQUIVALENT: DTC B2103) 09–02F–6
SECURITY LIGHT: DTC 13 (WDS OR EQUIVALENT: DTC B1600) 09–02F–6
SECURITY LIGHT: DTC 13 (WDS OR EQUIVALENT: DTC B2431) 09–02F–7
SECURITY LIGHT: DTC 14(WDS OR EQUIVALENT: DTC B1602) 09–02F–7
SECURITY LIGHT: DTC 15 (WDS OR EQUIVALENT: DTC B1601) 09–02F–7
SECURITY LIGHT: DTC 21 (WDS OR EQUIVALENT: DTC B1213) 09–02F–8
SECURITY LIGHT:NOT ILLUMINATED (WDS OR EQUIVALENT: DTC B1342) 09–02F–8

FOREWORD

E6U090267000W01

Structural View

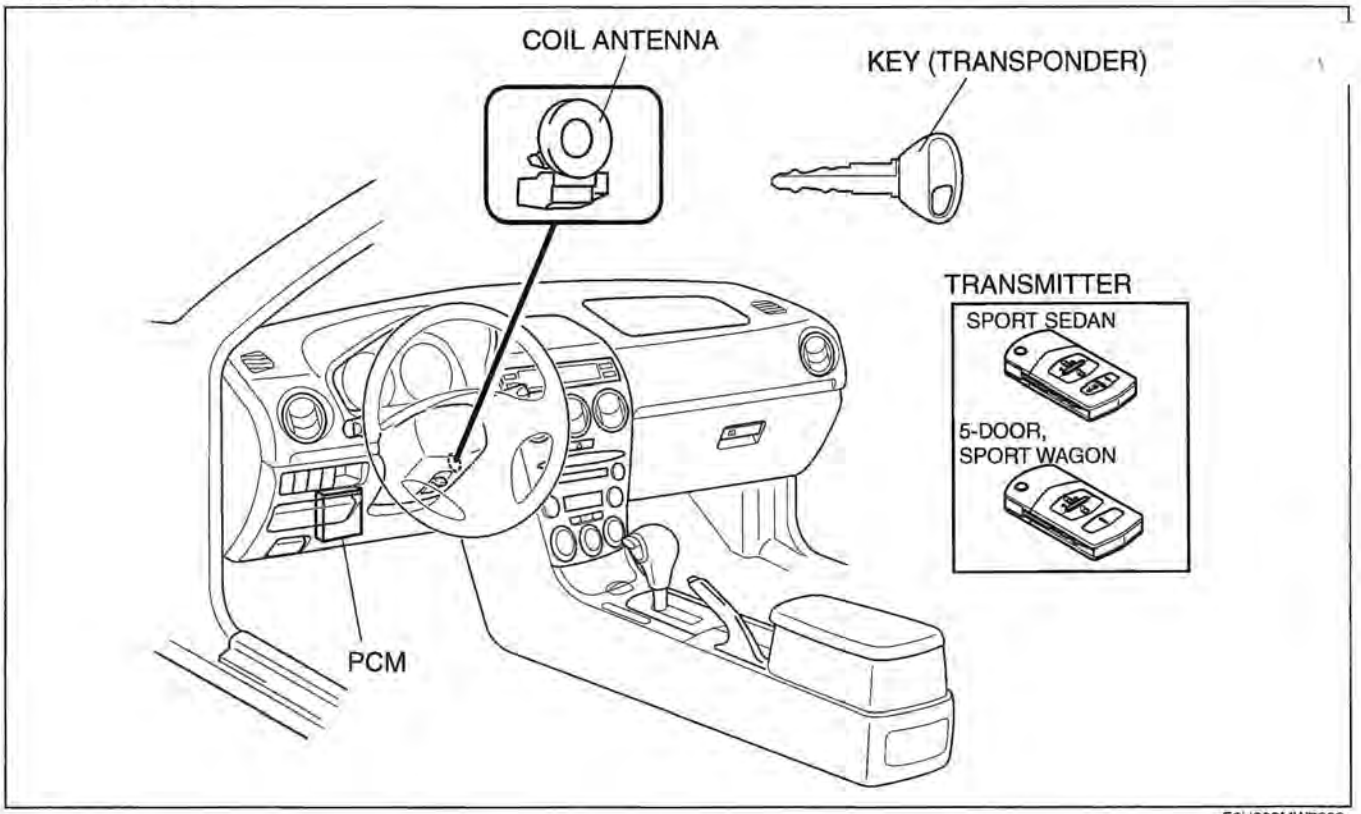

E6U902MW7002

Caution

- **When the engine does not start or stalls and the following DTCs are not indicated, refer to engine symptom troubleshooting. (See 01–03A–17 NO.3 WILL NOT CRANK [L3]) (See 01–03C–16 NO.3 WILL NOT CRANK [AJ])**
- **If DTCs cannot be retrieved due to a security light circuit malfunction, refer to immobilizer system symptom troubleshooting. (See 09–03E–2 NO.1 SECURITY LIGHT REMAINS ON OR DOES NOT ILLUMINATE)**

Note

- When the immobilizer system is defective, the engine cannot be started.
- If engine condition is normal but security light stays on, inspect for short circuit between security light. Repair or replace the wiring harness if necessary.
- The vehicle may fail to start or a DTC may be stored in the PCM if the following occurs:
  - — If a large, metal object is close to a valid key
  - — If an electrical device is close to a valid key
  - — If two or more valid keys are on the same key ring
- If any malfunction cannot be identified, verify that no metal object or electrical device is on the key ring.
- The security light repeatedly displays a DTC 10 times when the ignition switch is in the ON position.

1. Turn the ignition switch to the ON position.
   - If there is any malfunction, the security light flashes rapidly for **approx. 1 minute** and starts displaying a DTC.
   - If there is no malfunction, the security light illuminates for **approx. 3 seconds** and goes off.
2. Verify the security light condition and read the DTC according to security light flashing pattern.

3. Connect the **SST** (WDS or equivalent) to the vehicle DLC-2 16-pin connector.
4. Verify the DTC with the **SST** (WDS or equivalent). If a DTC is indicated, perform on-board diagnostic referring to the DTC table.

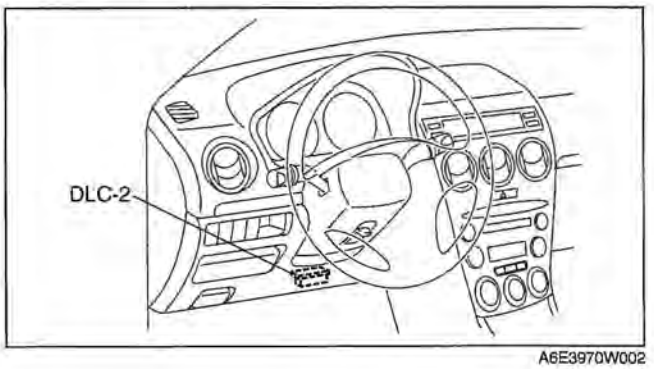

A6E3970W002

PID/Data Monitor and Record Procedure

1. Connect the **SST** (WDS or equivalent) to the vehicle DLC-2 16-pin connector.
2. Access and monitor PIDs using the **SST** (WDS or equivalent).

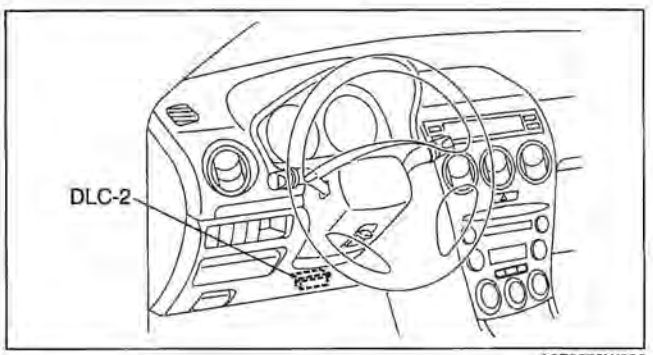

A6E3970W002

DTC TABLE [IMMOBILIZER SYSTEM]

E6U090267000W02

DTC			Description	Page
Security light	Security light flashing pattern	WDS OR EQUIVALENT		
11		B1681	Coil signal is not received.	(See 09–02F–4 SECURITY LIGHT: DTC 11 (WDS OR EQUIVALENT: DTC B1681))
12	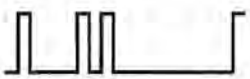	B2103	Coil failure.	(See 09–02F–6 SECURITY LIGHT: DTC 12 (WDS OR EQUIVALENT: DTC B2103))
13		B1600	ID number signal is not received.	(See 09–02F–6 SECURITY LIGHT: DTC 13 (WDS OR EQUIVALENT: DTC B1600))
		B2431	Transponder programming failure.	(See 09–02F–7 SECURITY LIGHT: DTC 13 (WDS OR EQUIVALENT: DTC B2431))
14		B1602	PCM received invalid format of ID number from transponder.	(See 09–02F–7 SECURITY LIGHT: DTC 14 (WDS OR EQUIVALENT: DTC B1602))
15		B1601	PCM received incorrect ID number from key (transponder).	(See 09–02F–7 SECURITY LIGHT: DTC 15 (WDS OR EQUIVALENT: DTC B1601))
21	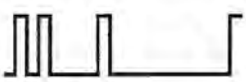	B1213	Number of valid keys is below minimum.	(See 09–02F–8 SECURITY LIGHT: DTC 21 (WDS OR EQUIVALENT: DTC B1213))

DTC			Description	Page
Security light	Security light flashing pattern	WDS OR EQUIVALENT		
Not illuminated	—	B1342	PCM is defective.	(See 09–02F–8 SECURITY LIGHT: NOT ILLUMINATED (WDS OR EQUIVALENT: DTC B1342))

Note

- Perform the following if the security light stays on:
  - — If engine stalls, go to symptom troubleshooting NO.11 "ENGINE STALLS/QUITS, ENGINE RUNS ROUGH, MISSES, BUCK/JERK, HESITATION/STUMBLE, SURGES" in.
    (See 01–03A–36 NO.11 ENGINE STALLS/QUITS, ENGINE RUNS ROUGH, MISSES, BUCK/JERK, HESITATION/STUMBLE, SURGES [L3].)
    (See 01–03C–34 NO.11 ENGINE STALLS/QUITS, ENGINE RUNS ROUGH, MISSES, BUCK/JERK, HESITATION/STUMBLE, SURGES [AJ].)
  - — If engine won't start, go to symptom troubleshooting NO.6 "CRANKS NORMALLY BUT WILL NOT START" in. (See 01–03A–25 NO.6 CRANKS NORMALLY BUT WILL NOT START [L3].)
    (See01–03C–24 NO.6 CRANKS NORMALLY BUT WILL NOT START [AJ].)
  - — If engine condition is normal but light stays on, inspect for continuity between the following wiring harness and body ground: security light and PCM terminal 2W (L3) or 2 (AJ). Repair or replace the wiring harness.

PID/DATA MONITOR TABLE [IMMOBILIZER SYSTEM]

E6U090267000W03

PID name (Description)	Unit	Specification	PCM terminal
NUMKEYS (Number of key stored in module)	–	Number of registered keys: 0—8	–

SECURITY LIGHT: DTC 11 (WDS OR EQUIVALENT: DTC B1681)

E6U090267000W

DTC 11 (B1681)	Coil signal is not received.
POSSIBLE CAUSE	• Defective wiring harness • Defective coil • Defective PCM

COIL
HARNESS SIDE CONNECTOR

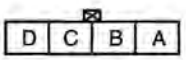



PCM (L3)
HARNESS SIDE CONNECTOR

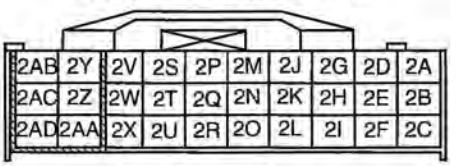



PCM (AJ) HARNESS SIDE CONNECTOR

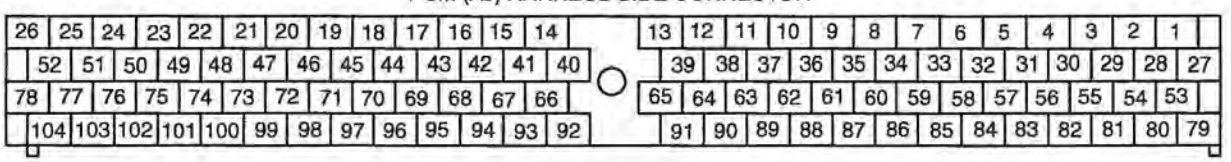

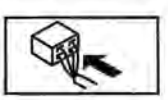

Diagnostic procedure

STEP	INSPECTION		ACTION
1	**INSPECT POWER SUPPLY CIRCUIT OF COIL** • Disconnect coil connector. • Turn ignition switch to ON position. • Measure voltage at terminal D of coil connector. • Is voltage **more than 8 V**?	Yes	Go to next step.
		No	Repair wiring harness.
2	**INSPECT WIRING HARNESS BETWEEN COIL AND GROUND** • Turn ignition switch to LOCK position. • Inspect wiring harness between coil terminal C and ground for following. — Short to power supply — Open circuit • Is wiring harness okay?	Yes	Go to next step.
		No	Repair wiring harness.
3	**INSPECT COIL INPUT SIGNAL CIRCUIT** • Connect coil connector. • Turn ignition switch to ON position. • Measure voltage at terminal B of coil connector. • Is voltage **more than 8 V**?	Yes	Go to Step 5.
		No	Go to next step.
4	**INSPECT COIL INPUT SIGNAL CIRCUIT** • Turn ignition switch to LOCK position. • Disconnect PCM connector. • Turn ignition switch to ON position. • Measure voltage at terminal 2T (L3) or 65 (AJ) of PCM connector. • Is voltage **more than 8 V**?	Yes	Replace PCM and reprogram immobilizer system. (See 09–14–39 IMMOBILIZER SYSTEM REPROGRAM PROCEDURE [WITH KEYLESS ENTRY SYSTEM])
		No	Go to next step.
5	**INSPECT COMMUNICATION CIRCUIT (INPUT) FOR CONTINUITY** • Turn ignition switch to LOCK position. • Disconnect coil and PCM connectors. • Is there continuity between coil connector terminal B and PCM connector terminal 2T (L3) or 65 (AJ)?	Yes	Go to next step.
		No	Repair wiring harness.
6	**INSPECT COIL INPUT SIGNAL CIRCUIT** • Measure resistance between coil connector terminal B and ground. • Is resistance **more than 10 kilohms**?	Yes	Replace coil. (See 09–14–28 COIL REMOVAL/INSTALLATION)
		No	Repair wiring harness.
7	**INSPECT COIL OUTPUT SIGNAL CIRCUIT** • Connect coil and PCM connectors. • Turn ignition switch to ON position. • Measure voltage at terminal A of coil connector. • Is voltage **more than 8 V**?	Yes	Replace coil. (See 09–14–28 COIL REMOVAL/INSTALLATION)
		No	Go to next step.
8	**INSPECT COIL OUTPUT SIGNAL CIRCUIT** • Turn ignition switch to LOCK position. • Disconnect coil connector. • Turn ignition switch to ON position. • Measure voltage at terminal A of coil connector. • Is voltage **more than 8 V**?	Yes	Replace coil. (See 09–14–28 COIL REMOVAL/INSTALLATION)
		No	Go to next step.
9	**INSPECT COMMUNICATION CIRCUIT (OUTPUT) FOR CONTINUITY** • Turn ignition switch to LOCK position. • Disconnect PCM connector. • Is there continuity between coil terminal A and PCM terminal 2Q (L3) or 66 (AJ)?	Yes	Go to next step.
		No	Repair wiring harness.
10	**INSPECT COIL OUTPUT SIGNAL CIRCUIT** • Measure resistance between PCM terminal 2Q (L3) or 66 (AJ) and ground. • Is resistance **more than 10 kilohms**?	Yes	Replace PCM and reprogram immobilizer system. (See 09–14–39 IMMOBILIZER SYSTEM REPROGRAM PROCEDURE [WITH KEYLESS ENTRY SYSTEM])
		No	Repair wiring harness.

SECURITY LIGHT: DTC 12 (WDS OR EQUIVALENT: DTC B2103)

E6U090267000W05

DTC 12 (B2103)	Coil failure.
POSSIBLE CAUSE	• Defective coil • Poor connection of coil connector

Diagnostic procedure

STEP	INSPECTION		ACTION
–	**INSPECT CONNECTOR CONNECTION** • Is connector of coil and PCM connected securely?	Yes	Replace coil. (See 09–14–28 COIL REMOVAL/INSTALLATION)
		No	Connect connector securely.

SECURITY LIGHT: DTC 13 (WDS OR EQUIVALENT: DTC B1600)

E6U090267000W06

DTC 13 (B1600)	ID number is not received.
POSSIBLE CAUSE	• No transponder in the key • Defective transponder in the key (ID number is not output.) • Defective coil • Defective PCM

Diagnostic procedure

STEP	INSPECTION		ACTION
1	**VERIFY DTC USING SST** • Does **SST** (WDS or equivalent) indicate DTC B1600?	Yes	Go to Step 3.
		No	Go to next step.
2	**VERIFY DTC USING SST** • Does **SST** (WDS or equivalent) indicate DTC B2431?	Yes	Go to SECURITY LIGHT: DTC 13 (WDS OR EQUIVALENT: B2431).
		No	Go to next step.
3	**VERIFY VALID KEY** • Is there any key, other than the one that caused displayed DTC, which can start the engine?	Yes	Go to Step 5.
		No	Go to next step.
4	**VERIFY WHETHER MALFUNCTION IS IN COIL OR KEY** • Using **SST** (WDS or equivalent) register an additional key. (See 09–14–39 IMMOBILIZER SYSTEM REPROGRAM PROCEDURE [WITH KEYLESS ENTRY SYSTEM]) • Using registered key, turn ignition switch to ON position. • Does **SST** (WDS or equivalent) indicate DTC B1600 again?	Yes	Replace coil, then go to step 6. (See 09–14–28 COIL REMOVAL/INSTALLATION)
		No	• Dispose of defective key. • Duplicate key if necessary. (See 09–14–39 IMMOBILIZER SYSTEM REPROGRAM PROCEDURE [WITH KEYLESS ENTRY SYSTEM])
5	**VERIFY WHETHER MALFUNCTION IS IN COIL OR KEY** • Using any other valid key, turn ignition switch to ON position. • Does **SST** (WDS or equivalent) indicate DTC B1600 again?	Yes	Replace coil, then go to next step. (See 09–14–28 COIL REMOVAL/INSTALLATION)
		No	• Dispose of defective key. • Duplicate key if necessary. (See 09–14–39 IMMOBILIZER SYSTEM REPROGRAM PROCEDURE [WITH KEYLESS ENTRY SYSTEM])
6	**INSPECT PCM** • Using registered key, turn ignition switch to ON position. • Does **SST** (WDS or equivalent) indicate DTC B1600 again?	Yes	Replace PCM and reprogram immobilizer system. (See 09–14–39 IMMOBILIZER SYSTEM REPROGRAM PROCEDURE [WITH KEYLESS ENTRY SYSTEM])
		No	Troubleshooting is completed.

SECURITY LIGHT: DTC 13 (WDS OR EQUIVALENT: DTC B2431)

E6U090267000W07

DTC 13 (B2431)	ID number programing failure.
POSSIBLE CAUSE	• The procedure fails to program the transponder into PCM

Diagnostic procedure

STEP	INSPECTION		ACTION
1	**VERIFY DTC USING SST** • Does **SST** (WDS or equivalent) indicate DTC B2431?	Yes	Go to Step 3.
		No	Go to next step.
2	**VERIFY DTC USING SST** • Does **SST** (WDS or equivalent) indicate DTC B1600?	Yes	Go to SECURITY LIGHT: DTC 13 (WDS OR EQUIVALENT: B1600).
		No	Go to next step.
3	**INSPECT PCM** • Erase key ID number using **SST** (WDS or equivalent) and register key ID number. (See 09–14–39 IMMOBILIZER SYSTEM REPROGRAM PROCEDURE [WITH KEYLESS ENTRY SYSTEM]) • Using registered key, turn ignition switch to ON position. • Does **SST** (WDS or equivalent) indicate DTC B2431 again?	Yes	Replace PCM and reprogram immobilizer system. (See 09–14–39 IMMOBILIZER SYSTEM REPROGRAM PROCEDURE [WITH KEYLESS ENTRY SYSTEM])
		No	Troubleshooting is completed.

SECURITY LIGHT: DTC 14 (WDS OR EQUIVALENT: DTC B1602)

E6U090267000W08

DTC 14 (B1602)	PCM received invalid format of ID number from key (transponder)
POSSIBLE CAUSE	• Defective transponder in the key • Defective coil • Defective PCM

Diagnostic procedure

STEP	INSPECTION		ACTION
1	**INSPECT FOR OTHER PROPER KEYS** • Using any other valid key, turn ignition switch to ON position. • If there are no other valid keys, then register an additional key using **SST** (WDS or equivalent) and turn ignition switch to ON position. (See 09–14–39 IMMOBILIZER SYSTEM REPROGRAM PROCEDURE [WITH KEYLESS ENTRY SYSTEM]) • Does security light or **SST** (WDS or equivalent) indicate DTC 14 (B1602) again?	Yes	Replace coil, then go to next step. (See 09–14–28 COIL REMOVAL/INSTALLATION)
		No	• Dispose of defective key. • Duplicate key if necessary. (See 09–14–39 IMMOBILIZER SYSTEM REPROGRAM PROCEDURE [WITH KEYLESS ENTRY SYSTEM])
2	**INSPECT PCM** • Turn ignition switch to ON position with the registered key. • Does security light or **SST** (WDS or equivalent) indicate DTC 14 (B1602) again?	Yes	Replace PCM and reprogram immobilizer system. (See 09–14–39 IMMOBILIZER SYSTEM REPROGRAM PROCEDURE [WITH KEYLESS ENTRY SYSTEM])
		No	Troubleshooting is completed.

SECURITY LIGHT: DTC 15 (WDS OR EQUIVALENT: DTC B1601)

E6U090267000W09

DTC 15 (B1601)	PCM received incorrect ID number from key (transponder).
POSSIBLE CAUSE	• No keys have been registered after installation of new PCM • Unregistered key detected • Attempt made to register a ninth key **Note** • A maximum of only eight keys can be registered for a single vehicle. • Defective PCM

Diagnostic procedure

STEP	INSPECTION		ACTION
1	**VERIFY REGISTERED KEY IN PCM** • Check following PID/DATA monitor using **SST** (WDS or equivalent). — NUMKEYS • Is NUMKEYS displayed more than 0?	Yes	Go to next step.
		No	Go to Step 3.
2	**VERIFY REGISTERED KEY IN PCM** • Check following PID/DATA monitor using **SST** (WDS or equivalent). — NUMKEYS • Is NUMKEYS displayed more than 8?	Yes	• Erase key ID number using **SST** (WDS or equivalent) and register key ID number. (See 09–14–39 IMMOBILIZER SYSTEM REPROGRAM PROCEDURE [WITH KEYLESS ENTRY SYSTEM]) • Go to next step.
		No	Go to next step.
3	**INSPECT PCM** • Erase key ID number using **SST** (WDS or equivalent) and register key ID number. (See 09–14–39 IMMOBILIZER SYSTEM REPROGRAM PROCEDURE [WITH KEYLESS ENTRY SYSTEM]) • Using registered key, turn ignition switch to ON position. • Does security light or **SST** (WDS or equivalent) indicate DTC 15 (B1601) again?	Yes	Replace PCM and reprogram immobilizer system. (See 09–14–39 IMMOBILIZER SYSTEM REPROGRAM PROCEDURE [WITH KEYLESS ENTRY SYSTEM])
		No	Troubleshooting is completed.

SECURITY LIGHT: DTC 21 (WDS OR EQUIVALENT: DTC B1213)

E6U090267000W10

DTC 21 (B1213)	Number of valid keys is below minimum.
POSSIBLE CAUSE	• Less than two valid keys

Diagnostic procedure

STEP	INSPECTION		ACTION
1	**VERIFY NUMBER OF VALID KEYS** • Check following PID/DATA monitor with **SST** (WDS or equivalent). — NUMKEYS • Is NUMKEYS displayed more than 2? **Note** • To start the engine, two or more keys need to be registered.	Yes	Replace PCM and reprogram immobilizer system. (See 09–14–39 IMMOBILIZER SYSTEM REPROGRAM PROCEDURE [WITH KEYLESS ENTRY SYSTEM])
		No	• Erase key ID numbers and register necessary key ID numbers. • Go to next step.
2	**VERIFY DTC** • Does security light or **SST** (WDS or equivalent) indicate DTC 21 (B1213) again?	Yes	Replace PCM and reprogram immobilizer system. (See 09–14–39 IMMOBILIZER SYSTEM REPROGRAM PROCEDURE [WITH KEYLESS ENTRY SYSTEM])
		No	Troubleshooting is completed.

SECURITY LIGHT: NOT ILLUMINATED (WDS OR EQUIVALENT: DTC B1342)

E6U090267000W11

Not illuminated (B1342)	PCM is defective
POSSIBLE CAUSE	• Defective PCM

Diagnostic procedure

STEP	INSPECTION		ACTION
–	**INSPECT PCM** • Turn ignition switch to ON position from LOCK again. • Does **SST** (WDS or equivalent) indicate DTC B1342 again?	Yes	Replace PCM and reprogram immobilizer system. (See 09–14–39 IMMOBILIZER SYSTEM REPROGRAM PROCEDURE [WITH KEYLESS ENTRY SYSTEM])
		No	Connect connectors properly.

09–02G ON-BOARD DIAGNOSTIC [CONTROL SYSTEM]

DTC INSPECTION [BCM] 09–02G–1
DTC TABLE [BCM] 09–02G–1
TERMINAL/DATA MONITOR TABLE [BCM] 09–02G–2
DTC B1317 ..... 09–02G–2
DTC B1318 ..... 09–02G–3
DTC B1342 ..... 09–02G–4
DTC B2572 ..... 09–02G–5
DTC B2721 ..... 09–02G–6
DTC B1873 ..... 09–02G–7
DTC B1320 ..... 09–02G–8
DTC B1328 ..... 09–02G–9
DTC B1572 ..... 09–02G–10
DTC B1614 ..... 09–02G–11
DTC B1520 ..... 09–02G–12
DTC B1506 ..... 09–02G–13
DTC B2218 ..... 09–02G–14
DTC B1311 ..... 09–02G–15
BCM SELF-TEST 09–02G–16

DTC INSPECTION [BCM]

1. Connect the WDS or equivalent to the DLC-2.
2. Verify if any DTCs are displayed.
   - If any DTCs are displayed, perform the troubleshooting according to the corresponding DTC inspection.
3. Disconnect the WDS or equivalent.

E6U090200200W01

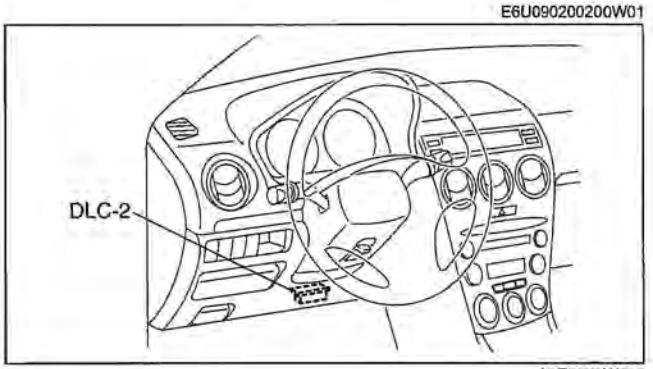

A6E3970W002

DTC TABLE [BCM]

E6U090200200W02

DTC No.	Description	Detection condition	Page
1317	Battery voltage high	Input voltage from the battery is excessively high	(See 09–02G–2 DTC B1317.)
B1318	Battery voltage low	Input voltage from the battery is excessively low	(See 09–02G–3 DTC B1318.)
B1342	ECU is faulted	BCM microcomputer malfunction	(See 09–02G–4 DTC B1342.)
B2572	Driver door lock switch short to ground	Short to GND in wiring harness between BCM and driver-side door lock-link switch	(See 09–02G–5 DTC B2572.)
B2721	Trunk lid ajar output short to ground	Short to GND in wiring harness between BCM and trunk compartment light switch	(See 09–02G–6 DTC B2721.)
B1873	Turn signal/hazard power feed circuit short to ground	Short to GND in wiring harness between BCM and hazard warning switch	(See 09–02G–7 DTC B1873.)
B1320	Door ajar LF circuit open	Open circuit in wiring harness between BCM and door switch (driver-side)	(See 09–02G–8 DTC B1320.)
B1328	Door ajar RF circuit open	Open circuit in wiring harness between BCM and door switch (passenger-side)	(See 09–02G–9 DTC B1328.)
B1572	Door ajar LR circuit open	Open circuit in wiring harness between BCM and door switch (LH)	(See 09–02G–10 DTC B1572.)
B1614	Rear wiper interval switch input circuit short to ground	Short to GND in wiring harness between BCM and rear wiper and washer switch (INT)	(See 09–02G–11 DTC B1614.)
B1520	Hood latch switch circuit open	Open circuit in wiring harness between BCM and hood latch switch	(See 09–02G–12 DTC B1520.)
B1506	Light turn signal right circuit short to ground	Short to GND in wiring harness between BCM and turn switch	(See 09–02G–13 DTC B1506.)
B2218	Door lock switch circuit short to ground	Short to GND in wiring harness between BCM and door lock switch	(See 09–02G–14 DTC B2218.)
1311	Unlock switch circuit open	Open circuit in wiring harness between BCM and driver-side door lock-link switch (unlock signal)	(See 09–02G–15 DTC B1311.)

PID/DATA MONITOR TABLE [BCM]

E6U090200200W03

PID/data monitor item	Input/output part	Unit/Condition (Tester display)	BCM terminal
C_LOCK_SW	Door lock switch	LOCK/OFF	7M
C_UNLK_SW		UNLOCK/OFF	
CCNT_GE	DTC	—	—
DRSW_REAR	Rear door switch (LH/RH)	OPEN/CLOSE	7D, 1F
DRSW_P	Front door switch (passenger's side)	OPEN/CLOSE	7F
DRSW_D	Front door switch (driver's side)	OPEN/CLOSE	7B
HAZARD	Hazard warning switch	On/Off	4G
HOOD_SW	Hood switch	OPEN/CLOSE	8M
LLSW_D	Driver-side door lock-link switch	LOCK/UNLOCK	7C, 7E
LLSW_P_R	Except driver-side door lock-link switch	LOCK/UNLOCK	7G
TR/LG_SW	Trunk compartment light switch	OPEN/CLOSE	2F
TRNK_UNLK	Trunk lid key cylinder switch	UNLOCK/OFF	2L
TURN_SW_L	Turn switch (LH)	On/Off	4C
TURN_SW_R	Turn switch (RH)	On/Off	4E
WPINT_REAR	Rear wiper switch (INT position)	On/Off	4I

DTC B1317

E6U090200200W04

DTC B1317	Battery voltage high
DETECTION CONDITION	Input voltage from the battery is excessively high
POSSIBLE CAUSE	• Battery malfunction • Generator malfunction • BCM malfunction

Diagnostic procedure

STEP	INSPECTION		ACTION
1	**INSPECT DTC FROM PCM** • Connect the WDS or equivalent to the DLC-2. • Are any DTCs from the PCM displayed?	Yes	Perform DTC inspection. (See 01–02A–18 DTC TABLE [L3].) (See 01–02B–14 DTC TABLE [L3 WITH TC].) (See 01–02C–13 DTC TABLE [AJ].) Go to the next step.
		No	Go to the next step.
2	**VERIFY TROUBLESHOOTING COMPLETED** • Make sure to reconnect all disconnected connectors. • Clear the DTC from the BCM memory using the WDS or equivalent. • Turn the ignition switch to LOCK position then ON position. • Is the same DTC present?	Yes	Replace the BCM. (See 09–40–1 BODY CONTROL MODULE (BCM) REMOVAL/INSTALLATION.)
		No	DTC troubleshooting completed.

DTC B1318

E6U090200200W05

DTC B1318	Battery voltage low
DETECTION CONDITION	Input voltage from the battery is excessively low
POSSIBLE CAUSE	• Open circuit in wiring harness between BCM terminal 3J and battery • Short to GND in wiring harness between BCM terminal 3J and battery • Battery malfunction • Generator malfunction • BCM malfunction

BCM WIRING HARNESS-SIDE CONNECTOR

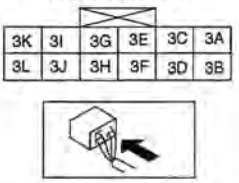

Diagnostic procedure

STEP	INSPECTION		ACTION
1	**INSPECT DTC FROM PCM** • Connect the WDS or equivalent to the DLC-2. • Are any DTCs from the PCM displayed?	Yes	Perform DTC inspection. (See 01–02A–18 DTC TABLE [L3].) (See 01–02B–14 DTC TABLE [L3 WITH TC].) (See 01–02C–13 DTC TABLE [AJ].) Go to Step 5.
		No	Go to the next step.
2	**INSPECT BCM CONNECTOR** • Disconnect the BCM connector. • Inspect the BCM connector terminals for poor connection (such as damaged/pulled-out pins, and corrosion). • Is there any malfunction?	Yes	Repair or replace the terminal, then go to Step 5.
		No	Go to the next step.
3	**INSPECT BCM POWER SUPPLY CIRCUIT FOR OPEN CIRCUIT** • Disconnect the negative battery cable. • Disconnect the positive battery cable. • Inspect for continuity between following terminals: — BCM terminal 3J (wiring harness-side) — battery positive terminal (wiring harness-side) • Is there continuity?	Yes	Go to the next step.
		No	Repair or replace the wiring harness for a possible open circuit, then go to Step 5.
4	**INSPECT BCM POWER SUPPLY CIRCUIT FOR SHORT TO GND** • Inspect for continuity between following terminals: — BCM terminal 3J (wiring harness-side) — body GND • Is there continuity?	Yes	Repair or replace the wiring harness for a possible short to GND, then go to the next step.
		No	Go to the next step.
5	**VERIFY TROUBLESHOOTING COMPLETED** • Make sure to reconnect all disconnected connectors. • Clear the DTC from the BCM memory using the WDS or equivalent. • Turn the ignition switch to LOCK position then ON position. • Is the same DTC present?	Yes	Replace the BCM. (See 09–40–1 BODY CONTROL MODULE (BCM) REMOVAL/INSTALLATION.)
		No	DTC troubleshooting completed.

DTC B1342

E6U09020020CW08

DTC B1342	ECU is faulted
DETECTION CONDITION	BCM microcomputer malfunction
POSSIBLE CAUSE	• BCM microcomputer malfunction

Diagnostic procedure

STEP	INSPECTION		ACTION
1	INSPECT DTC • Clear the DTC from the BCM memory using the WDS or equivalent. • Is the same DTC present?	Yes	Replace the BCM. (See 09–40–1 BODY CONTROL MODULE (BCM) REMOVAL/INSTALLATION.)
		No	DTC troubleshooting completed.

DTC B2572

E6U090200200W07

DTC B2572	Driver door lock switch short to ground
DETECTION CONDITION	Short to GND in wiring harness between BCM and driver-side door lock-link switch
POSSIBLE CAUSE	• Short to GND in wiring harness between BCM terminal 7E and front door lock-link switch (driver-side) terminal D • Front door latch and lock actuator (driver-side) malfunction • BCM malfunction

DOOR LOCK-LINK SWITCH WIRING HARNESS-SIDE CONNECTOR

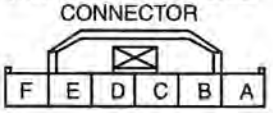

BCM WIRING HARNESS-SIDE CONNECTOR





Diagnostic procedure

STEP	INSPECTION		ACTION
1	**INSPECT FRONT DOOR LATCH AND LOCK ACTUATOR (DRIVER-SIDE) CONNECTOR** • Disconnect the front door latch and lock actuator (driver-side) connector. • Inspect the front door latch and lock actuator (driver-side) connector terminals for poor connection (such as damaged/pulled-out pins, and corrosion). • Is there any malfunction?	Yes	Repair or replace the terminal, then go to Step 5.
		No	Go to the next step.
2	**INSPECT BCM CONNECTOR** • Disconnect the BCM connector. • Inspect the BCM connector terminals for poor connection (such as damaged/pulled-out pins, and corrosion). • Is there any malfunction?	Yes	Repair or replace the terminal, then go to Step 5.
		No	Go to the next step.
3	**INSPECT FRONT DOOR LATCH AND LOCK ACTUATOR (DRIVER-SIDE) SIGNAL CIRCUIT FOR SHORT TO GND** • Inspect for continuity between BCM terminal 7E (wiring harness-side) and body GND. • Is there continuity?	Yes	Repair or replace the wiring harness for a possible short to GND, then go to Step 5.
		No	Go to the next step.
4	**INSPECT FRONT DOOR LATCH AND LOCK ACTUATOR (DRIVER-SIDE)** • Inspect the front door latch and lock actuator (driver-side). (See 09–14–8 FRONT DOOR LOCK ACTUATOR INSPECTION.) • Is there any malfunction?	Yes	Replace the front door latch and lock actuator (driver-side), then go to the next step. (See 09–14–8 FRONT DOOR LATCH AND LOCK ACTUATOR REMOVAL/INSTALLATION.)
		No	Go to the next step.
5	**VERIFY TROUBLESHOOTING COMPLETED** • Make sure to reconnect all disconnected connectors. • Perform the self-test. (See 09–02G–16 BCM SELF-TEST.) • Is the same DTC present?	Yes	Replace the BCM. (See 09–40–1 BODY CONTROL MODULE (BCM) REMOVAL/INSTALLATION.)
		No	DTC troubleshooting completed.

DTC B2721

E6U090200200W08

DTC B2721	Trunk lid/liftgate ajar output short to ground
DETECTION CONDITION	Short to GND in wiring harness between BCM and trunk compartment light switch (4SD) or cargo compartment light switch (5HB, WGN)
POSSIBLE CAUSE	• Short to GND in wiring harness between BCM terminal 2F and trunk compartment light switch terminal C or cargo compartment light switch terminal B • Trunk compartment light switch malfunction • Cargo compartment light switch malfunction • BCM malfunction

TRUNK COMPARTMENT LIGHT SWITCH WIRING HARNESS-SIDE CONNECTOR

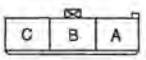



CARGO COMPARTMENT LIGHT SWITCH WIRING HARNESS-SIDE CONNECTOR

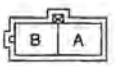

BCM WIRING HARNESS-SIDE CONNECTOR



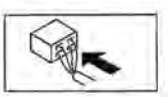

Diagnostic procedure

STEP	INSPECTION		ACTION
1	**INSPECT TRUNK COMPARTMENT LIGHT SWITCH CONNECTOR** • Disconnect the trunk compartment light switch connector. • Inspect the trunk/cargo compartment light switch connector terminals for poor connection (such as damaged/pulled-out pins, and corrosion). • Is there any malfunction?	Yes	Repair or replace the terminal, then go to Step 5.
		No	Go to the next step.
2	**INSPECT BCM CONNECTOR** • Disconnect the BCM connector. • Inspect the BCM connector terminals for poor connection (such as damaged/pulled-out pins, and corrosion). • Is there any malfunction?	Yes	Repair or replace the terminal, then go to Step 5.
		No	Go to the next step.
3	**INSPECT TRUNK COMPARTMENT LIGHT SWITCH SIGNAL CIRCUIT FOR SHORT TO GND** • Inspect for continuity between BCM terminal 2F (wiring harness-side) and body GND. • Is there continuity?	Yes	Repair or replace the wiring harness for a possible short to GND, then go to Step 5.
		No	Go to the next step.
4	**INSPECT TRUNK/CARGO COMPARTMENT LIGHT SWITCH** • Inspect the trunk/cargo compartment light switch. (See 09–18–34 TRUNK COMPARTMENT LIGHT SWITCH INSPECTION [SPORT SEDAN].) (See 09–18–31 CARGO COMPARTMENT LIGHT SWITCH INSPECTION [5-DOOR, SPORT WAGON].) • Is there any malfunction?	Yes	Replace the trunk/cargo compartment light switch, then go to the next step. (See 09–14–24 TRUNK LID OPENER REMOVAL/INSTALLATION [SPORT SEDAN].) (See 09–14–25 LIFTGATE LATCH AND LOCK ACTUATOR REMOVAL/INSTALLATION [5-DOOR, SPORT WAGON].)
		No	Go to the next step.
5	**VERIFY TROUBLESHOOTING COMPLETED** • Make sure to reconnect all disconnected connectors. • Perform the self-test. (See 09–02G–16 BCM SELF-TEST.) • Is the same DTC present?	Yes	Replace the BCM. (See 09–40–1 BODY CONTROL MODULE (BCM) REMOVAL/INSTALLATION.)
		No	DTC troubleshooting completed.

DTC B1873

E6U0902002OOW09

DTC B1873	Turn signal/hazard power feed circuit short to ground
DETECTION CONDITION	Short to GND in wiring harness between BCM and hazard warning switch
POSSIBLE CAUSE	• Short to GND in wiring harness between BCM terminal 4G and hazard warning switch terminal 1X • Hazard warning switch malfunction • BCM malfunction

HAZARD WARNING SWITCH WIRING HARNESS-SIDE CONNECTOR

1W	1U	1S	1Q	1O	1M	1K	1I	1G	1E	1C	1A
1X	1V	1T	1R	1P	1N	1L	1J	1H	1F	1D	1B



BCM WIRING HARNESS-SIDE CONNECTOR

4O	4M	4K	4I	4G	4E	4C	4A
4P	4N	4L	4J	4H	4F	4D	4B



Diagnostic procedure

STEP	INSPECTION		ACTION
1	**INSPECT HAZARD WARNING SWITCH CONNECTOR** • Disconnect the hazard warning switch connector. • Inspect the hazard warning switch connector terminals for poor connection (such as damaged/pulled-out pins, and corrosion). • Is there any malfunction?	Yes	Repair or replace the terminal, then go to Step 5.
		No	Go to the next step.
2	**INSPECT BCM CONNECTOR** • Disconnect the BCM connector. • Inspect the BCM connector terminals for poor connection (such as damaged/pulled-out pins, and corrosion). • Is there any malfunction?	Yes	Repair or replace the terminal, then go to Step 5.
		No	Go to the next step.
3	**INSPECT HAZARD WARNING SWITCH SIGNAL CIRCUIT FOR SHORT TO GND** • Inspect for continuity between BCM terminal 4G (wiring harness-side) and body GND. • Is there continuity?	Yes	Repair or replace the wiring harness for a possible short to GND, then go to Step 5.
		No	Go to the next step.
4	**INSPECT HAZARD WARNING SWITCH** • Inspect the hazard warning switch. (See 09–18–21 WARNING SWITCH INSPECTION.) • Is there any malfunction?	Yes	Replace the hazard warning switch, then go to the next step. (See 09–20–5 CENTER PANEL UNIT DISASSEMBLY/ ASSEMBLY.)
		No	Go to the next step.
5	**VERIFY TROUBLESHOOTING COMPLETED** • Make sure to reconnect all disconnected connectors. • Perform the self-test. (See 09–02G–16 BCM SELF-TEST.) • Is the same DTC present?	Yes	Replace the BCM. (See 09–40–1 BODY CONTROL MODULE (BCM) REMOVAL/INSTALLATION.)
		No	DTC troubleshooting completed.

DTC B1320

E6U090200200W10

DTC B1320	Door ajar (driver-side) circuit open
DETECTION CONDITION	Open circuit in wiring harness between BCM and front door switch (driver-side)
POSSIBLE CAUSE	• Open circuit in wiring harness between BCM terminal 7B and door switch (driver-side) terminal A • Door switch (driver-side) malfunction • BCM malfunction

DOOR SWITCH (DRIVER-SIDE) WIRING HARNESS-SIDE CONNECTOR



BCM WIRING HARNESS-SIDE CONNECTOR





Diagnostic procedure

STEP	INSPECTION		ACTION
1	**INSPECT DOOR SWITCH (DRIVER-SIDE) CONNECTOR** • Turn the ignition switch off. • Disconnect the door switch (driver-side) connector. • Inspect the door switch (driver-side) connector terminals for poor connection (such as damaged/pulled-out pins, and corrosion). • Is there any malfunction?	Yes	Repair or replace the terminal, then go to Step 5.
		No	Go to the next step.
2	**INSPECT BCM CONNECTOR** • Disconnect the BCM connector. • Inspect the BCM connector terminals for poor connection (such as damaged/pulled-out pins, and corrosion). • Is there any malfunction?	Yes	Repair or replace the terminal, then go to Step 5.
		No	Go to the next step.
3	**INSPECT DOOR SWITCH (DRIVER-SIDE) SIGNAL CIRCUIT FOR OPEN CIRCUIT** • Inspect for continuity between BCM terminal 7B (wiring harness-side) and door switch (driver-side) terminal A (wiring harness-side). • Is there continuity?	Yes	Go to the next step.
		No	Repair or replace the wiring harness for a possible open circuit, then go to Step 5.
4	**INSPECT FRONT DOOR LATCH AND LOCK ACTUATOR (DRIVER-SIDE)** • Inspect the front door latch and lock actuator (driver-side). (See 09–18–36 DOOR SWITCH INSPECTION.) • Is there any malfunction?	Yes	Replace the door switch (driver-side), then go to the next step. (See 09–18–36 DOOR SWITCH REMOVAL/ INSTALLATION.)
		No	Go to the next step.
5	**VERIFY TROUBLESHOOTING COMPLETED** • Make sure to reconnect all disconnected connectors. • Perform the self-test. (See 09–02G–16 BCM SELF-TEST.) • Is the same DTC present?	Yes	Replace the BCM. (See 09–40–1 BODY CONTROL MODULE (BCM) REMOVAL/INSTALLATION.)
		No	DTC troubleshooting completed.

DTC B1328

E6U090200200W11

DTC B1328	Door ajar (passenger-side) circuit open
DETECTION CONDITION	Open circuit in wiring harness between BCM and door switch (passenger-side)
POSSIBLE CAUSE	• Open circuit in wiring harness between BCM terminal 7F and door switch (passenger-side) terminal G • Door switch (passenger-side) malfunction • BCM malfunction

DOOR SWITCH (PASSENGER-SIDE) WIRING HARNESS-SIDE CONNECTOR



BCM WIRING HARNESS-SIDE CONNECTOR

7W	7U	7S	7Q	7O	7M	7K	7I	7G	7E	7C	7A
7X	7V	7T	7R	7P	7N	7L	7J	7H	7F	7D	7B



Diagnostic procedure

STEP	INSPECTION		ACTION
1	**INSPECT DOOR SWITCH (PASSENGER-SIDE) CONNECTOR** • Turn the ignition switch off. • Disconnect the door switch (passenger-side) connector. • Inspect the door switch (passenger-side) connector terminals for poor connection (such as damaged/pulled-out pins, and corrosion). • Is there any malfunction?	Yes	Repair or replace the terminal, then go to Step 5.
		No	Go to the next step.
2	**INSPECT BCM CONNECTOR** • Disconnect the BCM connector. • Inspect the BCM connector terminals for poor connection (such as damaged/pulled-out pins, and corrosion). • Is there any malfunction?	Yes	Repair or replace the terminal, then go to Step 5.
		No	Go to the next step.
3	**INSPECT DOOR SWITCH (PASSENGER-SIDE) SIGNAL CIRCUIT FOR OPEN CIRCUIT** • Inspect for continuity between BCM terminal 7F (wiring harness-side) and door switch (passenger-side) terminal A (wiring harness-side). • Is there continuity?	Yes	Go to the next step.
		No	Repair or replace the wiring harness for a possible open circuit, then go to Step 5.
4	**INSPECT DOOR SWITCH (PASSENGER-SIDE)** • Inspect the door switch (passenger-side). (See 09–18–36 DOOR SWITCH INSPECTION.) • Is there any malfunction?	Yes	Replace the door switch (passenger-side), then go to the next step. (See 09–18–36 DOOR SWITCH REMOVAL/ INSTALLATION.)
		No	Go to the next step.
5	**VERIFY TROUBLESHOOTING COMPLETED** • Make sure to reconnect all disconnected connectors. • Perform the self-test. (See 09–02G–16 BCM SELF-TEST.) • Is the same DTC present?	Yes	Replace the BCM. (See 09–40–1 BODY CONTROL MODULE (BCM) REMOVAL/INSTALLATION.)
		No	DTC troubleshooting completed.

DTC B1572

E6U090200200W12

DTC B1572	Door ajar (RL/RR) circuit open
DETECTION CONDITION	Open circuit in wiring harness between BCM and door switch (Rear, LH) Open circuit in wiring harness between BCM and door switch (Rear, RH)
POSSIBLE CAUSE	• Open circuit in wiring harness between BCM terminal 1F and door switch (Rear, LH) terminal A • Open circuit in wiring harness between BCM terminal 7D and door switch (Rear, RH) terminal A • Door switch malfunction • BCM malfunction

DOOR SWITCH (RL/RR) WIRING HARNESS-SIDE CONNECTOR





BCM WIRING HARNESS-SIDE CONNECTOR

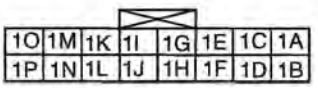





Diagnostic procedure

STEP	INSPECTION		ACTION
1	**INSPECT DOOR SWITCH (LH) CONNECTOR** • Turn the ignition switch off. • Disconnect the door switch (RR or RL) connector. • Inspect the door switch (RR or RL) connector terminals for poor connection (such as damaged/pulled-out pins, and corrosion). • Is there any malfunction?	Yes	Repair or replace the terminal, then go to Step 5.
		No	Go to the next step.
2	**INSPECT BCM CONNECTOR** • Disconnect the BCM connector. • Inspect the BCM connector terminals for poor connection (such as damaged/pulled-out pins, and corrosion). • Is there any malfunction?	Yes	Repair or replace the terminal, then go to Step 5.
		No	Go to the next step.
3	**INSPECT DOOR SWITCH (LH) SIGNAL CIRCUIT FOR OPEN CIRCUIT** • Inspect for continuity between BCM terminal (wiring harness-side) and door switch (LH) terminal (wiring harness-side). — 1F—A (RL) — 7D—A (RR) • Is there continuity?	Yes	Go to the next step.
		No	Repair or replace the wiring harness for a possible open circuit, then go to Step 5.
4	**INSPECT DOOR SWITCH (LH)** • Inspect the door switch (RR/RL). (See 09–18–36 DOOR SWITCH INSPECTION.) • Is there any malfunction?	Yes	Replace the door switch (RR/RL), then go to the next step. (See 09–18–36 DOOR SWITCH REMOVAL/ INSTALLATION.)
		No	Go to the next step.
5	**VERIFY TROUBLESHOOTING COMPLETED** • Make sure to reconnect all disconnected connectors. • Perform the self-test. (See 09–02G–16 BCM SELF-TEST.) • Is the same DTC present?	Yes	Replace the BCM. (See 09–40–1 BODY CONTROL MODULE (BCM) REMOVAL/INSTALLATION.)
		No	DTC troubleshooting completed.

DTC B1614

E6U090200200W13

DTC B1614	Rear wiper INT switch input circuit short to ground
DETECTION CONDITION	Short to GND in wiring harness between BCM and rear wiper and washer switch (INT)
POSSIBLE CAUSE	• Short to GND in wiring harness between BCM terminal 4I and windshield wiper and washer switch terminal H • Windshield wiper and washer switch malfunction • BCM malfunction

WINDSHIELD WIPER AND WASHER SWITCH WIRING HARNESS-SIDE CONNECTOR

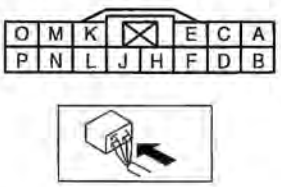

BCM WIRING HARNESS-SIDE CONNECTOR





Diagnostic procedure

STEP	INSPECTION		ACTION
1	**INSPECT WINDSHIELD WIPER AND WASHER SWITCH CONNECTOR** • Disconnect the windshield wiper and washer switch connector. • Inspect the windshield wiper and washer switch connector terminals for poor connection (such as damaged/pulled-out pins, and corrosion). • Is there any malfunction?	Yes	Repair or replace the terminal, then go to Step 5.
		No	Go to the next step.
2	**INSPECT BCM CONNECTOR** • Disconnect the BCM connector. • Inspect the BCM connector terminals for poor connection (such as damaged/pulled-out pins, and corrosion). • Is there any malfunction?	Yes	Repair or replace the terminal, then go to Step 5.
		No	Go to the next step.
3	**INSPECT WINDSHIELD WIPER AND WASHER SWITCH SIGNAL CIRCUIT FOR SHORT TO GND** • Inspect for continuity between BCM terminal 4I (wiring harness-side) and body GND. • Is there continuity?	Yes	Repair or replace the wiring harness for a possible short to GND, then go to Step 5.
		No	Go to the next step.
4	**INSPECT WINDSHIELD WIPER AND WASHER SWITCH** • Inspect the windshield wiper and washer switch. (See 09–19–10 WIPER AND WASHER SWITCH INSPECTION.) • Is there any malfunction?	Yes	Replace the windshield wiper and washer switch, then go to the next step. (See 09–19–9 WIPER AND WASHER SWITCH REMOVAL/INSTALLATION.)
		No	Go to the next step.
5	**VERIFY TROUBLESHOOTING COMPLETED** • Make sure to reconnect all disconnected connectors. • Perform the self-test. (See 09–02G–16 BCM SELF-TEST.) • Is the same DTC present?	Yes	Replace the BCM. (See 09–40–1 BODY CONTROL MODULE (BCM) REMOVAL/INSTALLATION.)
		No	DTC troubleshooting completed.

DTC B1520

E6U09O200200W15

DTC B1520	Hood latch switch circuit open
DETECTION CONDITION	Open circuit in wiring harness between BCM and hood latch switch
POSSIBLE CAUSE	• Open circuit in wiring harness between BCM terminal 8M and hood latch switch terminal A • Hood latch switch malfunction • BCM malfunction

HOOD LATCH SWITCH WIRING HARNESS-SIDE CONNECTOR





BCM WIRING HARNESS-SIDE CONNECTOR

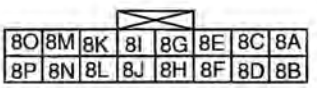



Diagnostic procedure

STEP	INSPECTION		ACTION
1	**INSPECT HOOD LATCH SWITCH CONNECTOR** • Turn the ignition switch off. • Disconnect the hood latch switch connector. • Inspect the hood latch switch connector terminals for poor connection (such as damaged/pulled-out pins, and corrosion). • Is there any malfunction?	Yes	Repair or replace the terminal, then go to Step 5.
		No	Go to the next step.
2	**INSPECT BCM CONNECTOR** • Disconnect the BCM connector. • Inspect the BCM connector terminals for poor connection (such as damaged/pulled-out pins, and corrosion). • Is there any malfunction?	Yes	Repair or replace the terminal, then go to Step 5.
		No	Go to the next step.
3	**INSPECT HOOD LATCH SWITCH SIGNAL CIRCUIT FOR OPEN CIRCUIT** • Inspect for continuity between BCM terminal 8M (wiring harness-side) and hood latch switch terminal A (wiring harness-side). • Is there continuity?	Yes	Go to the next step.
		No	Repair or replace the wiring harness for a possible open circuit, then go to Step 5.
4	**INSPECT HOOD LATCH SWITCH** • Inspect the hood latch switch. (See 09–14–27 HOOD SWITCH INSPECTION.) • Is there any malfunction?	Yes	Replace the hood latch switch, then go to the next step. (See 09–10–3 HOOD REMOVAL/INSTALLATION [EXCEPT L3 WITH TC].) (See 09–10–4 HOOD REMOVAL/INSTALLATION [L3 WITH TC].)
		No	Go to the next step.
5	**VERIFY TROUBLESHOOTING COMPLETED** • Make sure to reconnect all disconnected connectors. • Perform the self-test. (See 09–02G–16 BCM SELF-TEST.) • Is the same DTC present?	Yes	Replace the BCM. (See 09–40–1 BODY CONTROL MODULE (BCM) REMOVAL/INSTALLATION.)
		No	DTC troubleshooting completed.

DTC B1506

E6U090200200W16

DTC B1506	Turn signal right circuit short to ground
DETECTION CONDITION	Short to GND in wiring harness between BCM and turn switch
POSSIBLE CAUSE	• Short to GND in wiring harness between BCM terminal 4C and light switch terminal A (LH) • Short to GND in wiring harness between BCM terminal 4E and light switch terminal E (RH) • Light switch malfunction • BCM malfunction

TURN SWITCH WIRING HARNESS-SIDE CONNECTOR

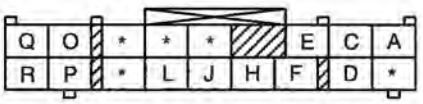

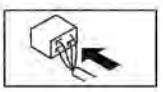

BCM WIRING HARNESS-SIDE CONNECTOR

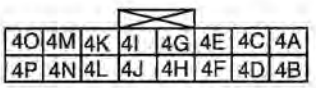



Diagnostic procedure

STEP	INSPECTION		ACTION
1	**INSPECT LIGHT SWITCH CONNECTOR** • Disconnect the light switch connector. • Inspect the light switch connector terminals for poor connection (such as damaged/ pulled-out pins, and corrosion). • Is there any malfunction?	Yes	Repair or replace the terminal, then go to Step 5.
		No	Go to the next step.
2	**INSPECT BCM CONNECTOR** • Disconnect the BCM connector. • Inspect the BCM connector terminals for poor connection (such as damaged/pulled-out pins, and corrosion). • Is there any malfunction?	Yes	Repair or replace the terminal, then go to Step 5.
		No	Go to the next step.
3	**INSPECT LIGHT SWITCH SIGNAL CIRCUIT FOR SHORT TO GND** • Inspect for continuity between following terminals: — BCM terminal 4C (wiring harness-side) — body GND — BCM terminal 4E (wiring harness-side) — body GND • Is there continuity?	Yes	Repair or replace the wiring harness for a possible short to GND, then go to Step 5.
		No	Go to the next step.
4	**INSPECT LIGHT SWITCH** • Inspect the light switch. • Is there any malfunction?	Yes	Replace the light switch, then go to the next step. (See 09–18–21 LIGHT SWITCH INSPECTION.)
		No	Go to the next step.
5	**VERIFY TROUBLESHOOTING COMPLETED** • Make sure to reconnect all disconnected connectors. • Perform the self-test. (See 09–02G–16 BCM SELF-TEST.) • Is the same DTC present?	Yes	Replace the BCM. (See 09–40–1 BODY CONTROL MODULE (BCM) REMOVAL/INSTALLATION.)
		No	DTC troubleshooting completed.

DTC B2218

E6U090200200W14

DTC B2218	Door lock switch circuit short to ground
DETECTION CONDITION	Short to GND in wiring harness between BCM and door lock switch
POSSIBLE CAUSE	• Short to GND in wiring harness between BCM terminal 7M and door lock switch (driver's side) terminal A • Short to GND in wiring harness between BCM terminal 7M and door lock switch (passenger's side) terminal A • Door lock switch malfunction • BCM malfunction

DOOR LOCK SWITCH WIRING HARNESS-SIDE CONNECTOR





BCM WIRING HARNESS-SIDE CONNECTOR

7W	7U	7S	7Q	7O	7M	7K	7I	7G	7E	7C	7A
7X	7V	7T	7R	7P	7N	7L	7J	7H	7F	7D	7B



Diagnostic procedure

STEP	INSPECTION		ACTION
1	**INSPECT DOOR LOCK SWITCH CONNECTOR** • Turn the ignition switch off. • Disconnect the door lock switch connector. • Inspect the door lock switch connector terminals for poor connection (such as damaged/pulled-out pins, and corrosion). • Is there any malfunction?	Yes	Repair or replace the terminal, then go to Step 5.
		No	Go to the next step.
2	**INSPECT BCM CONNECTOR** • Disconnect the BCM connector. • Inspect the BCM connector terminals for poor connection (such as damaged/pulled-out pins, and corrosion). • Is there any malfunction?	Yes	Repair or replace the terminal, then go to Step 5.
		No	Go to the next step.
3	**INSPECT DOOR LOCK SWITCH SIGNAL CIRCUIT FOR SHORT TO GND** • Inspect for continuity between following terminals: — BCM terminal 7M (wiring harness-side) — door lock switch (driver's side) terminal A (wiring harness-side) — BCM terminal 7M (wiring harness-side) — door lock switch (passenger's side) terminal A (wiring harness-side) • Is there continuity?	Yes	Repair or replace the wiring harness for a possible short to GND, then go to Step 5.
		No	Go to the next step.
4	**INSPECT DOOR LOCK SWITCH** • Inspect the door lock switch. (See 09–14–11 DOOR LOCK SWITCH INSPECTION.) • Is there any malfunction?	Yes	Replace the door lock switch, then go to Step 5.
		No	Go to the next step.
5	**VERIFY TROUBLESHOOTING COMPLETED** • Make sure to reconnect all disconnected connectors. • Perform the self-test. (See 09–02G–16 BCM SELF-TEST.) • Is the same DTC present?	Yes	Replace the BCM. (See 09–40–1 BODY CONTROL MODULE (BCM) REMOVAL/INSTALLATION.)
		No	Troubleshooting completed.

DTC B1311

E6U090200200W17

DTC B1311	Unlock switch circuit open
DETECTION CONDITION	Open circuit in wiring harness between BCM and driver-side door lock-link switch (unlock signal)
POSSIBLE CAUSE	• Open circuit in wiring harness between BCM terminal 7C and door lock-link switch (driver-side) terminal E • Front door latch and lock actuator malfunction • BCM malfunction

DOOR LOCK-LINK SWITCH WIRING HARNESS-SIDE CONNECTOR

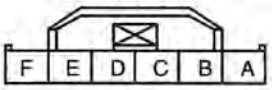

BCM WIRING HARNESS-SIDE CONNECTOR





Diagnostic procedure

STEP	INSPECTION		ACTION
1	**INSPECT FRONT DOOR LATCH AND LOCK ACTUATOR (DRIVER-SIDE) CONNECTOR** • Turn the ignition switch off. • Disconnect the front door latch and lock actuator (driver-side) connector. • Inspect the front door latch and lock actuator (driver-side) connector terminals for poor connection (such as damaged/pulled-out pins, and corrosion). • Is there any malfunction?	Yes	Repair or replace the terminal, then go to Step 5.
		No	Go to the next step.
2	**INSPECT BCM CONNECTOR** • Disconnect the BCM connector. • Inspect the BCM connector terminals for poor connection (such as damaged/pulled-out pins, and corrosion). • Is there any malfunction?	Yes	Repair or replace the terminal, then go to Step 5.
		No	Go to the next step.
3	**INSPECT FRONT DOOR LATCH AND LOCK ACTUATOR (DRIVER-SIDE) SIGNAL CIRCUIT FOR OPEN CIRCUIT** • Inspect for continuity between BCM terminal 7C (wiring harness-side) and front door latch and lock actuator (driver-side) terminal E (wiring harness-side). • Is there continuity?	Yes	Go to the next step.
		No	Repair or replace the wiring harness for a possible open circuit, then go to Step 5.
4	**INSPECT FRONT DOOR LATCH AND LOCK ACTUATOR (DRIVER-SIDE)** • Inspect the front door latch and lock actuator (driver-side). (See 09–14–8 FRONT DOOR LOCK ACTUATOR INSPECTION.) • Is there any malfunction?	Yes	Replace the front door latch and lock actuator (driver-side), then go to the next step. (See 09–14–8 FRONT DOOR LATCH AND LOCK ACTUATOR REMOVAL/INSTALLATION.)
		No	Go to the next step.
5	**VERIFY TROUBLESHOOTING COMPLETED** • Make sure to reconnect all disconnected connectors. • Perform the self-test. (See 09–02G–16 BCM SELF-TEST.) • Is the same DTC present?	Yes	Replace the BCM. (See 09–40–1 BODY CONTROL MODULE (BCM) REMOVAL/INSTALLATION.)
		No	DTC troubleshooting completed.

BCM SELF-TEST

E6U090200200W18

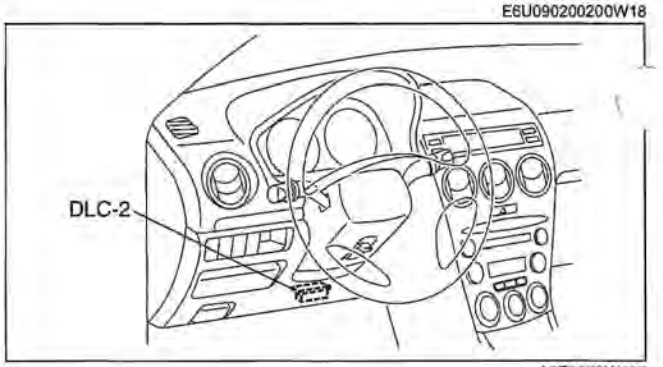

A6E3970W002

1. Connect the WDS or equivalent to the DLC-2.
2. Set up the WDS or equivalent (including the vehicle recognition).
3. Verify the following vehicle conditions:
   - Ignition switch is at ON position.
   - All the switches are turned off (except the ignition switch).
   - All the doors, hood, trunk lid, and liftgate are closed.
   - All the doors, and liftgate are unlocked.
   - Parking brake lever is pulled.
   - Hazard warning switch is turned to off.
   - Turn switch is turned to off.
   - Rear wiper switch is turned to off.
   - Door lock switch is not pressed.
4. Perform procedures according to directions on the WDS or equivalent screen.
5. Verify if any DTCs are displayed.
   - If any DTCs are displayed, perform the troubleshooting according to the corresponding DTC inspection.
6. Disconnect the WDS or equivalent.

09–03A SYMPTOM TROUBLESHOOTING [POWER WINDOW SYSTEMS]

)WER WINDOW SYSTEM WIRING DIAGRAM 09–03A–2
Power Window Main Switch..... 09–03A–2
Power Window Subswitch 09–03A–3
INTERMITTENT CONCERN TROUBLESHOOTING..... 09–03A–4
Vibration Method 09–03A–4
Connector Terminal Check Method ... 09–03A–4
FOREWORD 09–03A–5
BASIC POWER WINDOW SYSTEM INSPECTION..... 09–03A–5
Manual Mode Function Inspection.... 09–03A–5
Automatic Mode Function Inspection 09–03A–6
Automatic Door Glass Return Function Inspection 09–03A–6
IG OFF Timer Function Inspection.... 09–03A–7
Two-step Down Function Inspection.....09–03A–8
SYMPTOM TROUBLESHOOTING CHART 09–03A–8
NO. 1 DOOR GLASS DOES NOT MOVE UP AND DOWN IN AUTOMATIC MODE 09–03A–9
NO. 2 DOOR GLASS DOES NOT REVERSE, EVEN WHEN ENCOUNTERING A FOREIGN OBJECT IN ITS PATH 09–03A–12
NO. 3 DOOR GLASS REVERSES EVEN THOUGH THE GLASS DOES NOT ENCOUNTER A FOREIGN OBJECT WHILE IT IS MOVING UP IN AUTOMATIC MODE 09–03A–12
NO. 4 ABNORMAL NOISE WHILE THE DOOR GLASS IS OPENING OR CLOSING 09–03A–14

POWER WINDOW SYSTEM WIRING DIAGRAM

E6U090358000W20

Power Window Main Switch

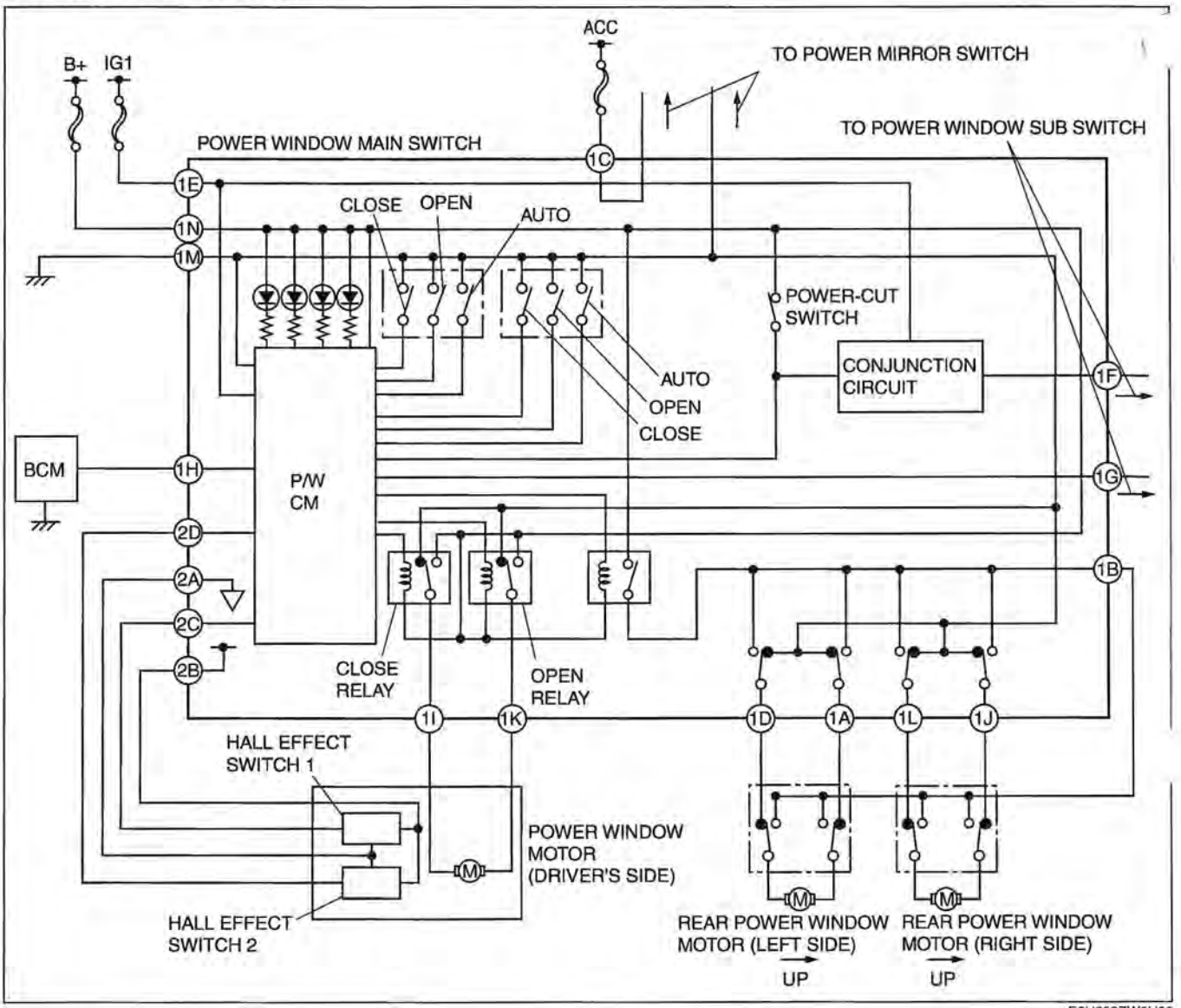

E6U903ZW5H03

Power Window Subswitch

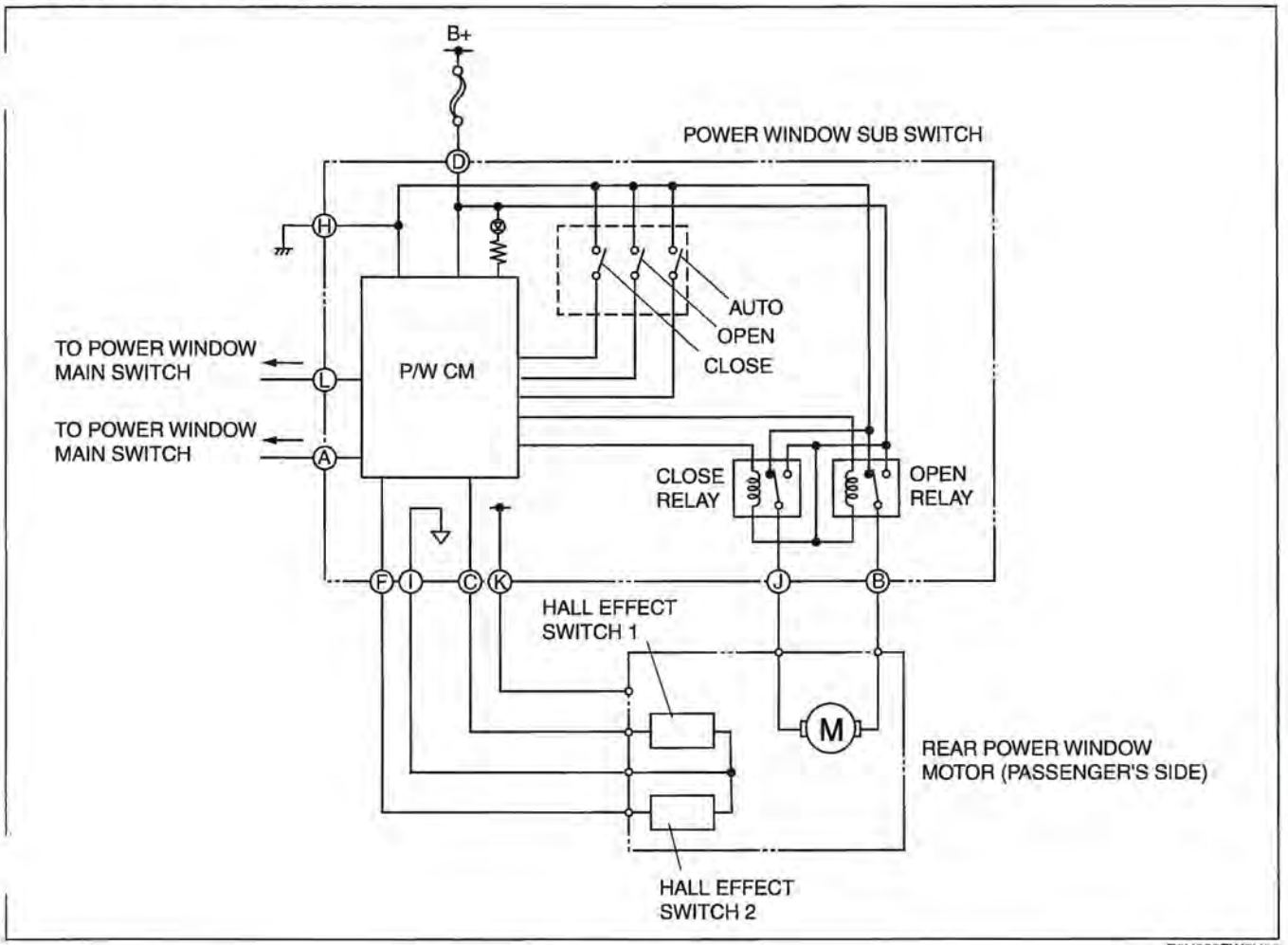

E6U903ZW5H08

INTERMITTENT CONCERN TROUBLESHOOTING

E6U090358000W21

Vibration Method

- If a malfunction occurs or becomes worse while driving on a rough road or when the engine is vibrating, perform following the steps:

Note

- There are several reasons why vehicle or engine vibration could cause an electrical malfunction. Some of the things to inspect for:
  - — Connectors not fully seated.
  - — Wiring harnesses not having full play.
  - — Wires laying across brackets or moving parts.
  - — Wires routed too close to hot parts.
- An improperly routed, improperly clamped, or loose wiring harness can cause wiring to become pinched between parts.
- The connector joints, points of vibration, and places where wiring harnesses pass through the firewall, body panels are the major areas to be inspected.
- Inspect for DTCs or malfunctions by slightly shaking wiring harnesses and connectors that are suspected of causing the malfunction.

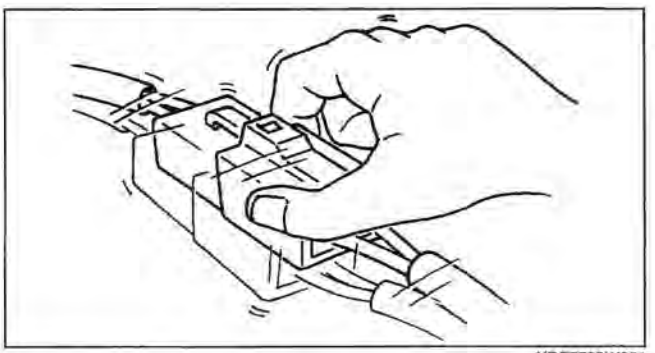

YDE7780W001

Connector Terminal Check Method

1. Inspect the connection condition of each female terminal.
2. Insert the male terminal into the female terminal to inspect for looseness.

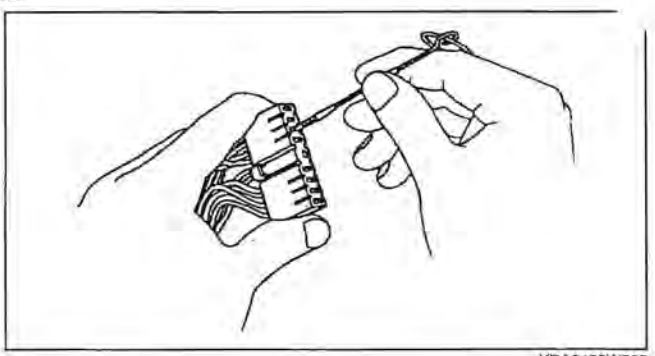

YDA8180W000

FOREWORD

E6U090358000W22

- Always perform basic power window system inspection before troubleshooting.
- Troubleshooting procedures provide information unique to malfunctions of the automatic window return function.

BASIC POWER WINDOW SYSTEM INSPECTION

E6U090358000W23

Manual Mode Function Inspection

STEP	INSPECTION		ACTION
1	• Turn the ignition switch to the ON position. • Turn the power-cut switch to UNLOCK. • Does each door glass move up and down in manual mode using the power window subswitch?	Yes	Go to the next step.
		No	• Inspect the following items: — Power window main switch (power-cut switch system malfunction) — Power window subswitch power supply fuses — Power window subswitch ground wiring harness — Power window subswitch power supply wiring harnesses — Wiring harness between power window subswitch and power window motor — Power window subswitch — Power window motor • Repair or replace the malfunctioning part, then go to the next step.
2	• Does the driver-side door glass move up and down in manual mode using the power window main switch?	Yes	Go to the next step.
		No	• Inspect the following items: — Power window main switch power supply fuses — Power window main switch ground wiring harness — Power window main switch power supply wiring harnesses — Wiring harness between power window main switch and power window motor — Power window main switch • Repair or replace the malfunctioning part, then go to the next step.
3	• Does each other door glass other than the driver-side door glass move up and down in manual mode using the power window main switch?	Yes	Go to the next step.
		No	• Perform the power window initialization procedure for any door glass that does not move up and down, and reinspect. (See 09–12–11 POWER WINDOW INITIALIZATION PROCEDURE.) • If it does not move up and down upon reinspection, inspect the following: — Wiring harness between power window main switch and subswitch • Repair or replace the malfunctioning part, then go to the next step.
4	• Turn the power-cut switch to LOCK. • Push/pull the power window main switch (switches for all windows in manual mode). • Does only driver-side front door glass move up and down?	Yes	• Manual mode function is normal. • Go to the automatic mode function inspection.
		No	Replace the power window main switch, then go to the automatic mode function inspection (power-cut switch system malfunction).

Automatic Mode Function Inspection

Note

- Perform the following inspection for the power window main switch and the power window subswitches fr each window.

STEP	INSPECTION		ACTION
1	• Turn the ignition switch to the ON position. • Operate the power window switch in automatic mode. • Does the door glass move up and down in automatic mode?	Yes	Go to the next step.
		No	• Door glass does not move up and down in automatic mode: — Go to Step 1 of NO. 1 DOOR GLASS DOES NOT MOVE UP AND DOWN IN AUTOMATIC MODE. • Door glass moves up and down in automatic mode, but door glass reverses: — Go to Step 1 of NO. 3 DOOR GLASS REVERSES EVEN THOUGH THE GLASS DOES NOT ENCOUNTER A FOREIGN OBJECT WHILE IT IS MOVING UP IN AUTOMATIC MODE.
2	• Gently pull the power window switch while the door glass is moving down in automatic mode. • Does the glass stop?	Yes	Go to the next step.
		No	Replace the power window switch, then go to the automatic door glass return function inspection.
3	• Gently press the power window switch while the door glass is moving up in automatic mode. • Does the glass stop?	Yes	• Automatic mode function is normal. • Go to the automatic door glass return function inspection.
		No	Replace the power window switch, then go to the automatic door glass return function inspection.

Automatic Door Glass Return Function Inspection

Note

- Perform the following inspection for the power window main switch and the power window subswitches fo each window.
- With the switch held at auto-up, the door glass does not automatically reverse even when a foreign objec is encountered.

STEP	INSPECTION		ACTION
1	• Turn the ignition switch to the ON position. • Lower the door glass completely. • Use the power window switch to close the door glass in automatic mode. • Does the door glass automatically reverse even though the glass does not encounter a foreign object while it is moving up in automatic mode?	Yes	Go to Step 1 of NO. 3 DOOR GLASS REVERSES EVEN THOUGH THE GLASS DOES NOT ENCOUNTER A FOREIGN OBJECT WHILE IT IS MOVING UP IN AUTOMATIC MODE.
		No	Go to the next step.
2	• Lower the door glass completely. • Take a hammer and hold it against the inside of the top of the window frame so that the door glass will hit its handle when it is closed. • Raise the door glass using automatic mode. • When the door glass hits the hammer handle, does it immediately reverse and move down to **approx. 200 mm {7.87 in}** from the completely closed position?	Yes	• Automatic door glass return function inspection is normal. • Go to the IG OFF timer function inspection.
		No	Go to Step 1 of NO. 2 DOOR GLASS DOES NOT REVERSE, EVEN WHEN ENCOUNTERING A FOREIGN OBJECT IN ITS PATH.

IG OFF Timer Function Inspection

STEP	INSPECTION		ACTION
1	• Close all doors. • Turn the ignition switch to the ON position. • In automatic mode, push down the power window main switch for the driver-side front door glass. The door glass should move down **within approx. 43 s** after ignition switch off. • In manual mode (finger continuously depressing the power window main switch), the door glass should move down **within approx. 43 s** after ignition switch off. • Does the driver-side front door glass move down?	Yes	Go to the next step.
		No	• Perform the driver-side power window initialization procedure, and reinspect.(See 09–12–11 POWER WINDOW INITIALIZATION PROCEDURE.) • If it does not move up and down upon reinspection, inspect the following: — Wiring harness for the door open/close signal system — Latch switch • Repair or replace the malfunctioning part, and reinspect. — If operation is not normal, replace the power window main switch, and then go to the next step.
2	• Turn the ignition switch to the ON position. • In automatic mode, pull up the power window main switch for the driver-side front door glass. The door glass does not move up **within approx. 43 s** after ignition switch off. • Verify that driver-side front door glass does not operate. • Does the driver-side front door glass move up?	Yes	• Perform the driver-side power window initialization procedure, and reinspect.(See 09–12–11 POWER WINDOW INITIALIZATION PROCEDURE.) — If operation is not normal, replace the power window main switch, then go to the next step.
		No	Go to the next step.
3	• Turn the ignition switch to the ON position. • Lower the driver-side front door glass completely. • Take a hammer and hold it against the inside of the top of the door glass frame so that the door glass will hit its handle when it is closing. • Raise the door glass using manual mode. • When the door glass hits the hammer handle, does it immediately reverse and move down to **approx. 200 mm {7.87 in}** from the completely closed position?	Yes	Go to the next step.
		No	• Perform the driver-side power window initialization procedure, and reinspect.(See 09–12–11 POWER WINDOW INITIALIZATION PROCEDURE.) — If operation is not normal, replace the power window main switch, then go to the next step.
4	• Open front door. • Turn the ignition switch to the ON position. • Push/pull the power window main switch for the door glass **within approx. 43 s** after ignition switch off. • Verify that the door glass does not move up or down. • Does the door glass move up or down?	Yes	• Inspect the door switch and related wiring harness. • If above parts are normal, replace the power window main switch, then go to the next step. • If the above parts have any malfunction, repair or replace the malfunction part, then go to the next step.
		No	Go to the next step.
5	• Close front door. • Turn the ignition switch to the ON position. • Push/pull the power window main switch for door glass after **approx. 60 s** after ignition switch off. • Verify that the door glass does not move up or down. • Does the door glass move up or down?	Yes	• Perform the driver-side power window initialization procedure, and reinspect.(See 09–12–11 POWER WINDOW INITIALIZATION PROCEDURE.) — If operation is not normal, replace the power window main switch, then go to the two-step down function inspection.
		No	• The IG OFF timer function is normal. • Go to the two-step down function inspection.

Two-step Down Function Inspection

- The distance the door glass opens can be changed using the two-step down function (**approx. 20—100 mm {0.79—3.93 in}**).
- The two-step down function can be made inoperative. (The function is operative at the initial setting.)
- The two-step down function does not function during IG OFF timer.

Note

- Perform the following inspection for the power window main switch and the power window subswitches for each window.

STEP	INSPECTION		ACTION
1	• Turn the ignition switch to the ON position. • Raise door glass completely. • When the door glass is lowered using manual mode, does it move down to **approx. 30 mm {1.2 in}** from the completely closed position and stop for 1 s? (This inspection cannot be performed during IG OFF timer function operation.)	Yes	• Two-step down function is normal. • Reinspect malfunction symptoms.
		No	• Perform the power window initialization procedure and verify auto-up/down operation.(See 09–12–11 POWER WINDOW INITIALIZATION PROCEDURE.) — If the automatic function does not operate, go to Automatic Door Glass Return Function Inspection. — If the automatic function operates but the two-step down function does not, replace the power window switch.

SYMPTOM TROUBLESHOOTING CHART

E6U090358000W24

No.	TROUBLESHOOTING ITEM	PAGE
1	Door glass does not move up and down in automatic mode	(See 09–03A–9 NO. 1 DOOR GLASS DOES NOT MOVE UP AND DOWN IN AUTOMATIC MODE.)
2	Door glass does not reverse, even when encountering a foreign object in its path.	(See 09–03A–12 NO. 2 DOOR GLASS DOES NOT REVERSE, EVEN WHEN ENCOUNTERING A FOREIGN OBJECT IN ITS PATH.)
3	Door glass does not reverse, even when encountering a foreign object in its path.	(See 09–03A–12 NO. 3 DOOR GLASS REVERSES EVEN THOUGH THE GLASS DOES NOT ENCOUNTER A FOREIGN OBJECT WHILE IT IS MOVING UP IN AUTOMATIC MODE.)
4	Abnormal noise during the power window operation	(See 09–03A–14 NO. 4 ABNORMAL NOISE WHILE THE DOOR GLASS IS OPENING OR CLOSING.)

NO. 1 DOOR GLASS DOES NOT MOVE UP AND DOWN IN AUTOMATIC MODE

E6U090358000W25

Note
- Perform the following inspection for the power window system component parts of windows where the door glass cannot be operated automatically.

1	Door glass does not move up and down in automatic mode
POSSIBLE CAUSE	• Open circuit or short to power supply in sensor 1 signal, ground signal from wiring harness (between power window switch and power window motor), inner power window switch, or inner motor: Steps 3–6 • Open circuit or short to power supply/ground in sensor 2 signal from wiring harness (between power window switch and power window motor), inner power window switch, or inner motor: Steps 7–11 **Note** • The automatic function and the IG OFF timer function do not operate while the power window switch is in fail-safe mode. The fail-safe operates when sensor 1, and/or sensor 2, and/or the sensor power supply malfunctions. • Sensor 1 and/or 2 malfunction — When the door glass is moving up and down, the power window switch cannot sense a pulse signal from sensor 1 during the time it senses 5 pulses (2.5 cycles) from sensor 2. — When the door glass is moving up and down, the switch cannot sense a pulse signal from sensor 2 during the time it senses 5 pulses (2.5 cycles) from sensor 1. — There are three abnormal pulses in a pulse signal while the door glass is moving up or down. — There are 20 cycle pulses from a closed position while the door glass is moving up. — There is no pulse signal for 1 s after the door glass is moved down.

POWER WINDOW MAIN SWITCH HARNESS-SIDE CONNECTOR

1M	1K	1I		1E	1C	1A
1N	1L	1J	1H	1F	1D	1B

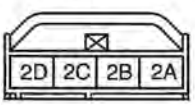

POWER WINDOW SUBSWITCH HARNESS-SIDE CONNECTOR

K	I	*	*	C	A
L	J	H	F	D	B

POWER WINDOW MOTOR HARNESS-SIDE CONNECTOR

E	C	A
F	D	B



09-03

Diagnostic procedure

STEP	INSPECTION		ACTION
1	**INSPECT WHETHER POWER WINDOW SWITCH ENTERS FAIL-SAFE MODE OR NOT** • Did the door glass move up or down in automatic mode?	Yes	Reinspect malfunction symptoms.
		No	Go to the next step. (Power window switch may enter fail-safe mode.)
2	**VERIFY WHETHER MALFUNCTION IS IN WIRING HARNESS (BETWEEN POWER WINDOW SWITCH AND POWER WINDOW MOTOR) OR ELSEWHERE** • Turn the ignition switch to the ON position. • Inspect the voltage at the following power window switch terminals (sensor 1 signal): — Driver's side: 2C — Passenger's side: C • Does the voltage alternate between **0 V** and **approx. 12 V** when the door glass is moving up and down?	Yes	Go to Step 7.
		No	Go to the next step.
3	**VERIFY SENSOR 1 OUTPUT SIGNAL** • Turn the ignition switch to the ON position. • Inspect the voltage at the following power window motor terminals (sensor 1 signal): — terminal: A • Is the voltage alternate between **0 V** and **approx. 12 V** when the door glass is moving up and down in manual mode?	Yes	Go to the next step.
		No	Replace the power window motor, then go to Step 12.

STEP	INSPECTION		ACTION
4	**INSPECT WIRING HARNESS BETWEEN POWER WINDOW SWITCH AND POWER WINDOW MOTOR FOR CONTINUITY** • Turn the ignition switch to the LOCK position. • Disconnect the power window switch connector. • Is there continuity between the following power window switch terminals and power window motor terminals? — Driver's side: • 2C–A (sensor 1 signal) • 2B–D (sensor power supply) • 2A–C (ground signal) — Passenger's side: • C–A (sensor 1 signal) • K–D (sensor power supply) • I–C (ground signal)	Yes	Go to the next step.
		No	Repair the wiring harness between the power window switch and power window motor, then go to Step 12.
5	**VERIFY WHETHER MALFUNCTION IS IN WIRING HARNESS (BETWEEN POWER WINDOW SWITCH AND POWER WINDOW MOTOR) OR POWER WINDOW SWITCH** • Turn the ignition switch to the ON position. • Inspect the voltage at the following power window switch terminals: — Driver's side • 2C (sensor 1 signal) • 2A (ground signal) — Passenger's side • C (sensor 1 signal) • I (ground signal) • Is the voltage **approx. 12 V**?	Yes	Repair the wiring harness between the power window switch and power window motor, then go to Step 12.
		No	Replace the power window switch (open circuit or short to power supply in power window switch).
6	**VERIFY WHETHER MALFUNCTION IS IN WIRING HARNESS (BETWEEN POWER WINDOW SWITCH AND POWER WINDOW MOTOR) OR ELSEWHERE** • Is there continuity between the following power window switch terminals (wiring harness-side) and ground? — Driver's side • 2C (sensor 1 signal) • 2B (sensor power supply) — Passenger's side • C (sensor 1 signal) • K (sensor power supply)	Yes	Replace the wiring harness between the power window switch and power window motor, then go to Step 12.
		No	Go to the next step.
7	**VERIFY WHETHER MALFUNCTION IS IN POWER WINDOW SWITCH OR ELSEWHERE** • Turn the ignition switch to the ON position. • Inspect the voltage at the following power window switch terminals. — Driver's side : 2D — Passenger's side : F • Does the voltage alternate between **0 V** and **approx. 12 V** when the door glass is moving up and down?	Yes	Replace the power window switch (malfunction in power window switch automatic mode control), then go to Step 11.
		No	Go to the next step.
8	**VERIFY SENSOR 2 OUTPUT SIGNAL** • Turn the ignition switch to the ON position. • Inspect the voltage at power window motor terminal B (sensor 2 signal). • Does the voltage alternate between **0 V** and **approx. 12 V** when door glass is moving up and down?	Yes	Go to the next step.
		No	Replace the power window motor, then go to Step 12.

STEP	INSPECTION		ACTION
9	**VERIFY WHETHER MALFUNCTION IS IN WIRING HARNESS (BETWEEN POWER WINDOW SWITCH AND POWER WINDOW MOTOR) OR ELSEWHERE** • Turn the ignition switch to the LOCK position. • Disconnect the power window switch connector and power window motor connector. • Is there continuity between the following power window switch terminals and power window motor terminals? — Driver's side : 2D-B (sensor 2 signal) — Passenger's side :F-B(sensor 2signl)	Yes	Go to the next step.
		No	Repair the wiring harness between the power window switch and power window motor, then go to Step 12.
10	**VERIFY WHETHER MALFUNCTION IS IN WIRING HARNESS (BETWEEN POWER WINDOW SWITCH AND POWER WINDOW MOTOR) OR ELSEWHERE** • Is there continuity between the following power window switch terminals (sensor 2 signal) — Driver's side : 2D — Passenger's side : F	Yes	Repair the wiring harness between the power window switch and power window motor, then go to Step 12.
		No	Go to the next step.
11	**VERIFY WHETHER MALFUNCTION IS IN WIRING HARNESS (BETWEEN POWER WINDOW SWITCH AND POWER WINDOW MOTOR) OR POWER WINDOW SWITCH** • Turn the ignition switch to the ON position. • Measure the voltage at the following power window switch terminals (sensor 2 signal). • Is there continuity between the following power windowswitch terminals (sensor 2 signal) — Driver's side : 2D — Passenger's side :F • Is the voltage **approx. 12 V**?	Yes	Repair the wiring harness between the power window switch and front driver-side power window motor, then go to the next step.
		No	Replace the power window switch (open circuit or short to power supply/ground in power window switch), then go to the next step.
12	**REINSPECT MALFUNCTION SYMPTOM AFTER REPAIR** • Is malfunction no longer present?	Yes	• Troubleshooting completed. • Explain repairs to the customer.
		No	Reinspect malfunction symptoms, then repeat from Step 1 if malfunction recurs.

NO. 2 DOOR GLASS DOES NOT REVERSE, EVEN WHEN ENCOUNTERING A FOREIGN OBJECT IN ITS PATH

E6U090358000W26

Note
- Perform the following inspection for the power window system component parts of the windows where th door glass does not reverse, even when encountering a foreign object in its path.

2	**Door glass does not reverse, even when encountering a foreign object in its path.**
POSSIBLE CAUSE	• Automatic window return range did not reset after battery disconnection

Diagnostic procedure

STEP	INSPECTION		ACTION
1	**VERIFY CUSTOMER COMPLAINT** • Did the customer complain that the door glass did not reverse when near complete closed position?	Yes	• The system is normal. • Explain to the customer that automatic window return power window system does not operate when near complete closed position.
		No	Go to the next step.
2	**RESET REVERSE AREA STORED IN DOOR GLASS MOTOR** • Perform the power window initialization procedure. (See 09–12–11 POWER WINDOW INITIALIZATION PROCEDURE.) • Did malfunction disappear?	Yes	• Troubleshooting completed. • Explain to the customer that misadjustment of automatic window return range was the problem.
		No	Replace the power window switch. • Verify auto-up/down operation and if the automatic function does not operate, go to Step 1 of NO. 1 DOOR GLASS DOES NOT MOVE UP AND DOWN IN AUTOMATIC MODE. • If the automatic function operates, replace the power window switch.

NO. 3 DOOR GLASS REVERSES EVEN THOUGH THE GLASS DOES NOT ENCOUNTER A FOREIGN OBJECT WHILE IT IS MOVING UP IN AUTOMATIC MODE

E6U090358000W27

Note
- Perform the following inspection for the power window system component parts of windows where the door glass reverses even though the glass does not encounter a foreign object while it is moving up in automatic mode.

3	**Door glass reverses even though the glass does not encounter a foreign object while it is moving up in automatic mode.**
POSSIBLE CAUSE	• TOROUBLESHOOTING HINTS: increase sliding resistance of door glass while raising the glass. — Improper installation of side visor — Regulator motor malfunction — Pinch any foreign material between door glass and door glass run channel — Inadequate installation of carrier plate and door glass — Door glass run channel malfunction — Door glass guide malfunction **Note** • When the switch detects to pinch something, auto reverse pinch protection function operates to open the door glass automatically. • If the sliding resistance of door glass is increased and door glass raising speed is slow down, the auto reverse pinch protection function sometime operates. • If the door glass raising speed is slow down, inspect the following parts: — If door glass rotates forward slightly: inspect the vehicle front side of door glass guide and/or door glass run channel. — If door glass rotates backward slightly: inspect the vehicle rear side of door glass guide and/or door glass run channel.

Diagnostic procedure

STEP	INSPECTION		ACTION
1	• Confirm the symptom. • Does the symptom occur under the following condition? — Bumping road — Opening/closing door	Yes	System is normal. (Explain to customer that this is normal operation on this system.)
		No	Go to the next step.
2	• Inspect the side visor installation condition. • Is the side visor normal?	Yes	Go to the next step.
		No	Install the side visor properly, then go to next step.
3	• Put any tape on the back side of the door glass. • Run the engine at idle. • Inspect the door glass operating speed. • Is there any speed cange?(e.g., slow down)	Yes	Put the mark the speed change position on either door shell or door glass run channel. Go to step 5.
		No	Go to the next step.
4	• Inspect the door glass operating speed again. • Is the speed change frequently (e.g.,5-6 times)?	Yes	Replace the regulator motor. Then go to step 8.
		No	Go to step 8.
5	• Is there any foreign material between door glass run channel and door glass? • Is there any rough surface on the sliding surface?	Yes	**If there is any foreign material:** • Remove the foreign material. **If there is any rough surface on the sliding surface:** • Replace the door glass run channel. • Confirm the symptom again. If there is a same symptom, return to step 3.
		No	Go to the next step.
6	• Inspect the installation condition of carrier plate and door glass. • Are both parts installed securely?	Yes	Go to the next step.
		No	Install them securely. Confirm the symptom again. If there is a same symptom, return to step 3
7	• Inspect the door glass run channel and door glass guide. • Are both parts normal?	Yes	Go to the next step.
		No	Install door glass run channel and door glass guide properly. Confirm the symptom again. If there is a same symptom, return to step 3.
8	• Inspect the door glass operating speed. • Is there any speed change?	Yes	Perform step 3 in this procedure again.
		No	Troubleshooting is completed.

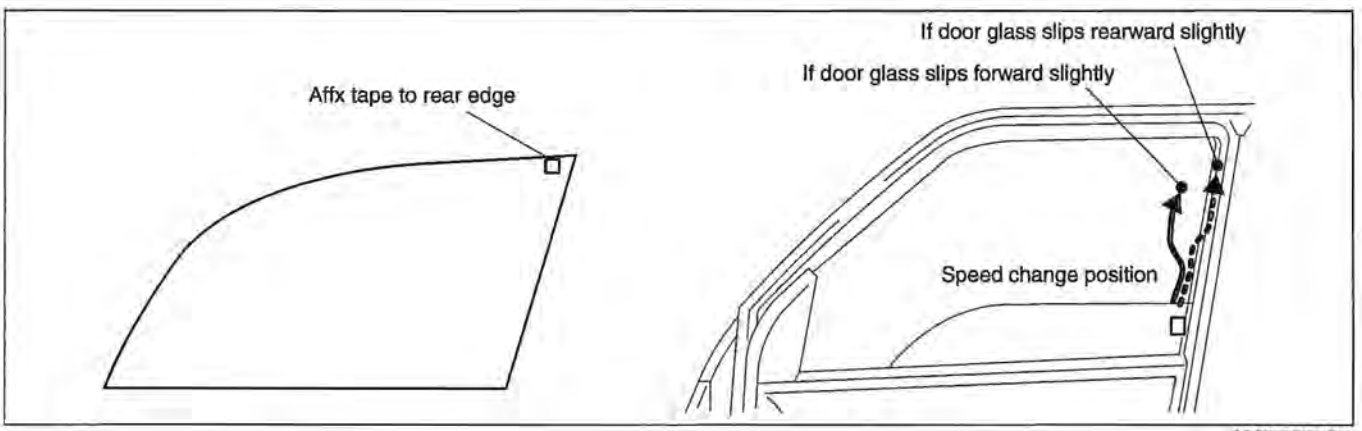

DPE903BW1S01

NO. 4 ABNORMAL NOISE WHILE THE DOOR GLASS IS OPENING OR CLOSING

E6U090358000W29

4	Abnormal noise while the power window operation
POSSIBLE CAUSE	• Loosen bolt for installing the door glass to the carrier plate. • Deform resin park on the regulator. — Wear mark on the resin park caused by cable — Deform gear inside regulator motor **Note** • Identify the noise generating place using the stethoscope or any equivalent.

Diagnostic procedure

Abnormal noise	Occurence timing	Possible route cause	Noise generating place	Action
Clicking noise	Beginning door glass operation	Loosen bolt for installing the the door glass to carrier plate.	Between dcarrier plate and lower side of door glass.	Re-tighten bolt.
Groaning noise	While operating door glass	Noise is created due to the wear mark on the resin part of the regulator guide caused by cable. **Note** • There is no groaning noise on thevehicle equipped with roller type regulator guide.	Regulator guide	Replace the regulator guide
Booming noise		Deform gear inside regulator motor.	Gear inside regulator motor	Replace the regulator motor
Chattering noise				

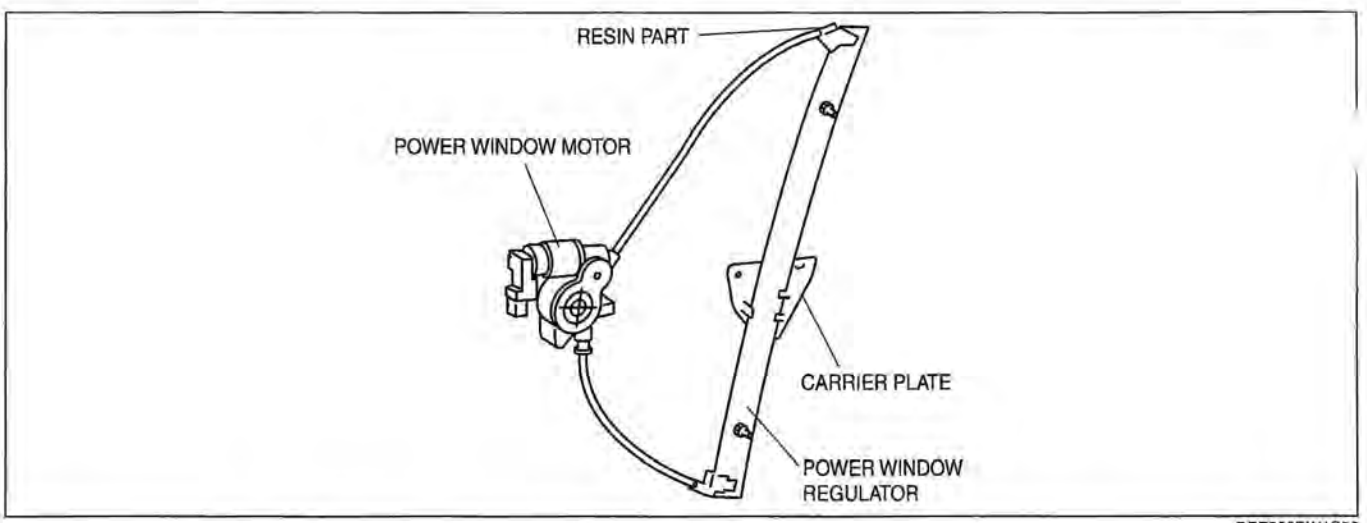

DPE903BW1S02

09–03B SYMPTOM TROUBLESHOOTING [EXTERIOR OPEN/CLOSE FUNCTION]

SYMPTOM TROUBLESHOOTING INDEX..... 09–03B–1
QUICK DIAGNOSTIC CHART..... 09–03B–2
NO. 1 ALL DOOR GLASSES ARE INOPERATIVE..... 09–03B–3
NO. 2 TRAMSMITTER WON'T OPERATE ANY DOOR GLASS AT ALL..... 09–03B–3
NO. 3 KEY WON'T OPERATE ANY DOOR GLASS AT ALL..... 09–03B–4
NO. 4 SOME DOOR GLASSES ARE INOPERATIVE..... 09–03B–4
NO. 5 DOOR GLASS AUTOMATICALLY STOPS DURING OPENING OR CLOSING OPERATION..... 09–03B–4
NO. 6 DOOR GLASS AUTOMATICALLY OPENS IN THE CLOSING OPERATION..... 09–03B–5
NO. 7 ALL DOOR GLASSES OPERATE INCORRECTLY..... 09–03B–6
NO. 8 SOME DOOR GLASSES OPERATE INCORRECTLY..... 09–03B–6

SYMPTOM TROUBLESHOOTING INDEX

E6U090358000W10

No.	TROUBLESHOOTING ITEM
1	09–03B–3 NO. 1 ALL DOOR GLASSES ARE INOPERATIVE
2	09–03B–3 NO. 2 TRAMSMITTER WON'T OPERATE ANY DOOR GLASS AT ALL
3	09–03B–4 NO. 3 KEY WON'T OPERATE ANY DOOR GLASS AT ALL
4	09–03B–4 NO. 4 SOME DOOR GLASSES ARE INOPERATIVE
5	09–03B–4 NO. 5 DOOR GLASS AUTOMATICALLY STOPS DURING OPENING OR CLOSING OPERATION
6	09–03B–5 NO. 6 DOOR GLASS AUTOMATICALLY OPENS IN THE CLOSING OPERATION
7	09–03B–6 NO. 7 ALL DOOR GLASSES OPERATE INCORRECTLY
8	09–03B–6 NO. 8 SOME DOOR GLASSES OPERATE INCORRECTLY

QUICK DIAGNOSTIC CHART

E6U090358000W11

X: Applied

Possible factor / Troubleshooting item	1 All door glasses are inoperative	2 Transmitter won't operate any door glass at all	3 Key won't operate any door glass at all	4 Some door glass are inoperative	5 Door glass automatically stops during opening or closing operation	6 Door glass automatically opens in the closing operation	7 All door glasses operate incorrectly	8 Some door glasses operate incorrectly
Power window main switch malfunction	X				X		X	
Power window subswitch malfunction				X	X		X	X
Power window regulator malfunction	X			X	X	X		
Low battery voltage	X			X	X	X		
Power window initial set is incorrect	X			X	X			
Open circuit in wiring harness between power window main switch and BCM	X							
BCM malfunction	X	X	X		X		X	
Keyless unit malfunction		X			X			
Open circuit in wiring harness between keyless unit and BCM		X						
Leave door, liftgate or trunk open		X						
Leave ignition key into the steering lock		X						
Key cylinder switch malfunction			X		X		X	
Open or short circuit in wiring diagram between power window main switch and power window subswitch				X			X	
Door glass is installed improperly					X	X		
Keyless system inoperative due to out side of operating area or outside interference on the transmitter					X			
Transmitter malfunction							X	
Open or short circuit in wiring harness between key cylinder switch and BCM							X	

E6U903ZW5H07

Note

- The global closing system won't operate under the following conditions:
  - — Leave the door, liftgate or trunk open.
  - — Leave ignition key into the steering lock.
  - — Start knob is not in LOCK position
- Power window automatic operation function does not operate after the power window is initialized.
- Outside temperature and/or vehicle battery voltage condition may cause the incorrect operation of the power window (e.g., Door glass automatically opens in the closing operation.)

NO. 1 ALL DOOR GLASSES ARE INOPERATIVE

E6U090358000W12

1	All door glasses are inoperative
POSSIBLE CAUSE	• Power window main switch malfunction • Power window regulator malfunction • Low battery voltage • Power window initial set is incorrect • Open circuit in wiring harness between power window main switch and BCM • BCM malfunction

Diagnostic Procedure

Step	Inspection		Action
1	• Operate power windows by power window main switch. • Does power window operate?	Yes	Go to the next step.
		No	Inspect the following part and repair or replace the suspect part: • Power window main switch (See 09–12–7 POWER WINDOW MAIN SWITCH INSPECTION.) • Power window regulator • Battery voltage
2	• Activate automatic function • Does the function operate?	Yes	Go to the next step.
		No	Initialize the power window. (See 09–12–11 POWER WINDOW INITIALIZATION PROCEDURE.)
3	• Lock or unlock the doors using the key. • Do the doors lock/unlock properly?	Yes	Inspect the open circuit in wiring harness between power window main switch and the BCM. Repair or replace the suspect wiring harness.
		No	Inspect BCM. Replace the BCM if necessary. (See 09–40–1 BODY CONTROL MODULE (BCM) REMOVAL/INSTALLATION.)

09–03E

NO. 2 TRANSMITTER WON'T OPERATE ANY DOOR GLASS AT ALL

E6U090358000W13

2	Transmitter won't operate any door glass at all
POSSIBLE CAUSE	• BCM malfunction • Keyless unit malfunction • Open circuit in wiring harness between keyless unit and BCM • Leave door, lift gate or trunk open • Leave ignition key into the steering lock

Diagnostic Procedure

Step	Inspection		Action
1	• Lock or unlock the doors using the transmitter. • Do all doors lock/unlock properly?	Yes	Inspect the following part and repair or replace the suspect part: • Keyless unit • BCM (See 09–40–2 BODY CONTROL MODULE (BCM) INSPECTION.)
		No	Go to the next step.
2	• Make sure that all doors, lift gate and trunk are closed. • Are all doors, lift gate and trunk closed?	Yes	Go to the next step.
		No	The system is normal. Explain to the customer that the system does not operate if any door leaves open.
3	• Make sure that the ignition key is inserted the steering lock. • Is the ignition key inserted into the steering lock?	Yes	The system is normal. Explain to the customer that the system does not operate if the ignition key is inserted the steering lock.
		No	Go to the next step.
4	• Do all doors lock/unlock properly now?	Yes	The system is normal. Go to Step 1 if the same symptom is duplicated.
		No	Inspect the following part and repair or replace the suspect part: — Keyless unit — Open circuit in wiring harness between keyless unit and BCM.

NO. 3 KEY WON'T OPERATE ANY DOOR GLASS AT ALL

E6U090358000W14

3	Key won't operate any door glass at all
POSSIBLE CAUSE	• BCM malfunction • Key cylinder switch malfunction

Diagnostic Procedure

Step	Inspection		Action
1	• Lock or unlock doors using key. • Do doors lock/unlock properly?	Yes	Inspect the BCM. (See 09–40–2 BODY CONTROL MODULE (BCM) INSPECTION.) Replace BCM if necessary. (See 09–40–1 BODY CONTROL MODULE (BCM) REMOVAL/ INSTALLATION.)
		No	Inspect key cylinder switch. Repair or replace the key cylinder switch if necessary.

NO. 4 SOME DOOR GLASSES ARE INOPERATIVE

E6U090358000W16

4	Some door glasses are inoperative
POSSIBLE CAUSE	• Power window subswitch malfunction • Power window regulator malfunction • Low battery voltage • Power window initial set is incorrect • Open or short circuit in wiring diagram between power window main switch and power window subswitch

Diagnostic Procedure

Step	Inspection		Action
1	• Operate the power windows by power window subswitch. • Does the power window operate properly?	Yes	Go to the next step.
		No	Inspect the following part and repair or replace the suspect part: — Power window subswitch (See 09–12–9 POWER WINDOW SUBSWITCH INSPECTION.) — Power window regulator — Battery voltage
2	• Active automatic function. • Does the function operate?	Yes	Inspect open circuit in the wiring harness between power window main switch and power window subswitch. Repair or replace the suspect wiring harness if necessary.
		No	Initialize the power window.

NO. 5 DOOR GLASS AUTOMATICALLY STOPS DURING OPENING OR CLOSING OPERATION

E6U090358000W17

5	Door glass automatically stops during opening or closing operation
POSSIBLE CAUSE	• Power window main switch malfunction • Power window subswitch malfunction • Power window regulator malfunction • Low battery voltage • Power window initial set is incorrect • BCM malfunction • Keyless unit malfunction • Key cylinder switch malfunction • Door glass is installed improperly • Keyless system inoperative due to out side of operating area or outside interference on the transmitter

Diagnostic procedure

Step	INSPECTION		ACTION
1	• Stop to open/close the window operation by power window main/subswitch.. • Are the power window automatic stop function and manual stop function normal?	Yes	Inspect the following parts and repair or replace the suspect part: — Power window main switch (See 09–12–7 POWER WINDOW MAIN SWITCH INSPECTION.) — Power window subswitch (See 09–12–9 POWER WINDOW SUBSWITCH INSPECTION.) — Power window regulator — Battery voltage — Door glass installation condition
		No	Go to the next step.
2	• Does the power window automatic stop function operate?	Yes	Initialize the power window. (See 09–12–11 POWER WINDOW INITIALIZATION PROCEDURE.)
		No	Go to the next step.
3	• Stop to close the power window by the transmitter. • Does the system stop to open the window?	Yes	Inspect the following parts and repair or replace the suspect part: — Keyless unit — BCM (See 09–40–2 BODY CONTROL MODULE (BCM) INSPECTION.)
		No	Go to the next step.
4	• Stop to close the power window by the transmitter. • Does the system stop to close the window?	Yes	Inspect the following part and repair or replace the suspect part: — Keyless unit — BCM (See 09–40–2 BODY CONTROL MODULE (BCM) INSPECTION.) — Keyless system inoperative due to out side of operating area or outside interference on the transmitter
		No	Go to the next step.
5	• Stop to operate the power window by key. • Does the system work properly?	Yes	Inspect the following part and repair or replace the suspect part: — Key cylinder switch — BCM (See 09–40–2 BODY CONTROL MODULE (BCM) INSPECTION.)
		No	The system is normal. Go to Step 1 if the same symptom is duplicated.

09–03

NO. 6 DOOR GLASS AUTOMATICALLY OPENS IN THE CLOSING OPERATION

E6U090358000W18

6	Door glass automatically opens in the closing operation
POSSIBLE CAUSE	• Power window regulator malfunction • Low battery voltage • Door glass is installed improperly

Diagnostic procedure

STEP	INSPECTION		ACTION
1	• Door glass opens in the closing operation by the power window main/subswitch. • Does the system work properly?	Yes	Inspect the power window regulator. Repair or replace it if necessary.
		No	Inspect the following part and repair or replace the suspect part: — Door glass installation condition — Power window regulator — Battery **Note** • Outside temperature and/or vehicle battery voltage condition may cause the incorrect operation of the power window (e.g., Door glass automatically opens in the closing operation)

NO. 7 ALL DOOR GLASSES OPERATE INCORRECTLY

E6U090358000W19

7	All door glasses operate incorrectly
POSSIBLE CAUSE	• BCM malfunction • Key cylinder switch malfunction • Open or short circuit in wiring diagram between power window main switch and power window subswitch • Transmitter malfunction • Open or short circuit in wiring harness between key cylinder switch and BCM • Power window main switch malfunction • Power window subswitch malfunction

Diagnostic procedure

STEP	INSPECTION		ACTION
1	• Operate the power windows by the transmitter. • Does the power window operate properly?	Yes	Go to the next step.
		No	Inspect the transmitter. Repair or replace it if necessary.
2	• Operate the power windows by the key. • Does the power window operate properly?	Yes	Go to the next step.
		No	Inspect the following part and repair or replace the suspect part: — Key cylinder switch — Open or short circuit in wiring harness between key cylinder switch and BCM
3	• Operate the power windows by the power window main switch. • Does the power window operate properly?	Yes	Go to the next step.
		No	Inspect the power window main switch. Replace the power window main switch if necessary. (See 09–12–6 POWER WINDOW SWITCH REMOVAL/INSTALLATION.)
4	• Does the power windows operate properly?	Yes	The system is normal. Go to Step 1. if the same symptom is duplicated.
		No	Inspect the following part and repair or replace the suspect part: — BCM — Power window subswitch — Open or short circuit in wiring diagram between power window main switch and power window subswitch.

NO. 8 SOME DOOR GLASSES OPERATE INCORRECTLY

E6U090358000W28

8	Some door glasses operate incorrectly
POSSIBLE CAUSE	• Power window subswitch malfunction

Diagnostic procedure

ACTION
Inspect the suspect power window subswitch and repair or replace the switch. (See 09–12–9 POWER WINDOW SUBSWITCH INSPECTION.)

09–03C SYMPTOM TROUBLESHOOTING [AUDIO]

FOREWORD
:NTIRE AUDIO SYSTEM] 09–03C–2
Troubleshooting Index 09–03C–2
Quick Diagnostic Chart (Entire Audio System) 09–03C–3
CONFIRMATION STEP 1: AUDIO PANEL SWITCH CONFIRMATION 09–03C–4
How to activate audio panel switch confirmation mode 09–03C–4
CONFIRMATION STEP 2: AUDIO CONTROL SWITCH CONFIRMATION 09–03C–4
NO.1 AF NOISE OR POP NOISE ON ALL SOURCES (RADIO, CD, CASSETTE TAPE) 09–03C–5
NO.2 NO POWER ON THE ENTIRE AUDIO SYSTEM 09–03C–7
NO.3 NO SOUND FROM ALL SPEAKERS [VEHICLES WITH BOSE] 09–03C–8
NO.3 NO SOUND FROM ALL SPEAKERS [VEHICLES WITHOUT BOSE] 09–03C–9
NO.4 NO SOUND FROM SOME SPEAKERS [VEHICLES WITH BOSE] 09–03C–9
NO.4 NO SOUND FROM SOME SPEAKERS [VEHICLES WITHOUT BOSE] 09–03C–11
NO.5 BROKEN SOUND OR POOR SOUND QUALITY 09–03C–13
NO.6 SOUND BECOMES LOUDLY OR WEAKLY WHILE DRIVING
HE VEHICLE 09–03C–14
..O.7 ALC FUNCTION IS INOPERATIVE 09–03C–14
NO.8 AUDIO SYSTEM ILLUMINATION DOES NOT ILLUMINATE AT ALL. 09–03C–15
NO.9 INFORMATION DISPLAY DOESNOT DISPLAY AT ALL 09–03C–16
FOREWORD [CD PLAYER/CHANGER] 09–03C–16
Troubleshooting Index 09–03C–16
NO.1 CD PLAYER/CHANGER DOES NOT LOAD THE CD OR EJECTS THE CD IMMEDIATELY 09–03C–18
NO.2 CD PLAYER/CHANGER DOES NOT EJECT THE CD 09–03C–19
NO.3 CD PLAYER/CHANGER DOES NOT PLAY THE CD/NO SOUND 09–03C–20
NO.4 SOUND JUMPS 09–03C–21
NO.5 CD PLAYER/CHANGER SCRATCHES ON THE CD 09–03C–22
NO.6 DISC CHANGE IS INOPERATIVE 09–03C–22
NO.7 CD PLAYER DOES NOT PLAY THE MP3-FORMATTED FILE 09–03C–23
NO.8 MP3-FORMATTED FILE FOLDER SELECTION IS INOPERATIVE/TRACK SEARCH IS INOPERATIVE 09–03C–24
NO.9 CD PLAYER DOES NOT INDICATE THE MP3 TITLE TEXT 09–03C–25
NO.10 CD PLAYER DOES NOT PLAY THE AUDIO DATA (CDDA) 09–03C–25
NO.11 TRACK CHANGE IS INOPERATIVE 09–03C–26
FOREWORD [RADIO] 09–03C–27
Troubleshooting Index 09–03C–27
Quick Diagnostic Chart (Radio) 09–03C–27
CONFIRMATION STEP 1: RECEPTION CONDITION SYMPTOM (EXAMPLE) 09–03C–28
CONFIRMATION STEP 2: ANTENNA SYSTEM SYMPTOM (EXAMPLE) 09–03C–28
CONFIRMATION STEP 3: ANTENNA SYSTEM SIMPLE INSPECTION 09–03C–28
NO.1 NO RADIO RECEPTION (AM/FM)/NO OR LOW VOLUME 09–03C–29
NO.2 NOISE FROM RADIO (AM ONLY) 09–03C–30
NO.3 NOISE FROM RADIO (FM ONLY) 09–03C–32
NO.4 CANNOT TUNE (SEEK DOES NOT STOP) 09–03C–34
NO.5 CANNOT PRESET (PRESET FUNCTION DOES NOT OPERATE) 09–03C–35
NO.6 RECEPTION FREQUENCY OF RADIO SLIPS 09–03C–35
RADIO [REFERENCE] 09–03C–36
1. Multipath Noise 09–03C–36
2. Flutter/Skip Noise 09–03C–36
3. Stereo and Monaural Receptions 09–03C–36
Measures in Audio System 09–03C–36
Effect Setting of Separation Control and High Tone Control 09–03C–36
AUDIO CD [REFERENCE] 09–03C–37
MP3-Formatted File 09–03C–38
DTC TABLE [AUDIO SYSTEM] 09–03C–39

FOREWORD [ENTIRE AUDIO SYSTEM]

E6U090366900W01

Note

- Record all radio programs set by customer prior to the repairs. Set all radio programs and adjust the tim after repairs.

Troubleshooting Index

No.	Symptom	Possible DTC
1	AF noise or POP noise on all sources (Radio, CD, Cassette tape)	09:Er20, 09:Er21
2	No power on the entire audio system	09:Er20
3	No sound from all speakers	00:Er10, 03:Er07, 03:Er10, 06:Er07, 06:Er10, 09:Er20, 09:Er21, 10:Er10, 11:Er10, 22:Er07, 22:Er10
4	No sound from some speaker	—
5	Broken sound or poor sound quality	09:Er21
6	Sound becomes loudly or weakly while driving the vehicle	—
7	ALC function is inoperative	16:Er12, 17:Er11
8	Audio system illumination does not illuminate at all.	09:Er20, 21:Er19
9	Information display does not display at all.	09:Er20, 21:Er19

Quick Diagnostic Chart (Entire Audio System)

X: Applicable

Possible factor \ Troubleshooting item	1 AF noise or POP noise on all sources (Radio, CD, Cassette tape)	2 No power on the entire audio system	3 No sound from all speakers	4 No sound from some speaker	5 Broken sound or poor sound quality	6 Sound becomes loudly or weakly while driving the vehicle	7 ALC function is inoperative	8 Audio system illumination does not illuminate at all.	9 Information display does not display at all.
Low vehicle battery voltage	X								
Jammed radio signals from after market equipment	X								
Speaker malfunction (e. g., any foreign material, broken)	X		X	X	X				
Improper speaker installation	X				X				
Poor connection of audio unit connector, terminal damage	X	X		X				X	
Antenna malfunction (e.g., poor ground)	X								
Audio unit malfunction		X	X	X	X	X	X	X	X
Audio amplifier malfunction (with BOSE)	X		X	X	X				
Open or short circuit in wiring harness between audio amplifier and ground (with BOSE)	X								
Woofer malfunction	X								
Poor connection of woofer connector, terminal damage	X								
Burnt fuse (B+)		X							
Burnt fuse (ACC)		X							
Open or short circuit in power supply (B+) wiring harness		X							
Open or short circuit in power supply (ACC) wiring harness		X							
Short circuit in wiring harness between audio unit and speaker (without BOSE)			X	X					
Open circuit in wiring harness between audio unit and speaker (without BOSE)				X					
Open or short circuit in wiring harness between audio amplifier and speaker (with BOSE)			X	X					
Open or short circuit in wiring harness between audio amplifier and audio unit (with BOSE)			X	X					
Poor connection of audio amplifier connector (with BOSE)				X					
Short circuit inside speaker			X	X					
Vibration of door trim and/or package trim					X				
CAN signal wiring harness malfunction							X		
Open or short circuit in vehicle speed signal wiring harness (e.g., instrument cluster)							X		
Burnt fuse (TNS signal)								X	
Open or short circuit in TNS signal wiring harness								X	
Center panel malfunction								X	
Information display malfunction									X

E6U903AZW5S0

CONFIRMATION STEP 1: AUDIO PANEL SWITCH CONFIRMATION

E6U090366900W02

- Verify the customer complain and identify either the center panel malfunction or audio unit malfunction.

How to activate audio panel switch confirmation mode

1. Turn the audio system on.
2. Press the POWER button and simultaneously press the CLOCK button for **approx. 1 s.**
3. The audio panel switch confirmation mode is now activated.

STEP	INSPECTION		ACTION
1	• Press each button on the center panel. • Does buzzer sound when pressing each button?	Yes	Verify the customer complain and then go to the appropriate symptom troubleshooting procedure.
		No	Go to the next step.
2	• Disassemble and reassemble the center panel and audio unit. • Activate the audio panel switch confirmation mode. • Does buzzer sound when pressing each button?	Yes	Go to the next step.
		No	Replace the center panel. (See 09–20–4 CENTER PANEL UNIT REMOVAL/ INSTALLATION.) (See 09–20–5 CENTER PANEL UNIT DISASSEMBLY/ ASSEMBLY.)
3	• Does the audio system operate properly?.	Yes	The system is normal.
		No	Verify the customer complain and then go to the appropriate symptom troubleshooting procedure.

CONFIRMATION STEP 2: AUDIO CONTROL SWITCH CONFIRMATION

E6U090366900W03

- Verify the customer complain and identify either the audio control switch malfunction or audio unit malfunction.

STEP	INSPECTION		ACTION
1	• Is the symptom related to either the audio control switch or audio panel operation?	Yes	Verify the customer complain and then go to the appropriate symptom troubleshooting procedure.
		No	**The symptom is related to the audio panel operation:** • Follow the "Confirmation Step 1". **The symptom is related to the audio control switch operation:** • Go to the next step.
2	• Disconnect the audio unit connector (24-pin). • Inspect both the audio unit and wiring harness-side connectors for poor connection. (such as damaged/pulled-out pins, corrosion). — Terminal N (ST SW1) — Terminal P (ST SW2) • Are all the pins normal?	Yes	Go to the next step.
		No	**If the audio unit side connector is wrong:** • Replace the audio unit. (See 09–20–4 CENTER PANEL UNIT REMOVAL/ INSTALLATION.) (See 09–20–5 CENTER PANEL UNIT DISASSEMBLY/ ASSEMBLY.) (See 09–20–6 AUDIO UNIT DISASSEMBLY/ ASSEMBLY.) **If the wiring harness-side connector is wrong:** • Repair or replace the pins and/or the connector.
3	• Inspect the continuity between the audio unit wiring harness-side connector terminal N and P while operating the audio control switch. • Does the resistance change?	Yes	Verify the customer complain and then go to the appropriate symptom troubleshooting procedure.
		No	Go to the next step.
4	• Turn the ignition switch to the LOCK position. • Remove the audio control switch. • Inspect the continuity between the audio unit wiring harness-side connector (24-pin) terminal and the audio control switch wiring harness-side connector (8-pin) terminal. — Terminal N (24-pin) — Terminal G (8-pin) — Terminal P (24-pin) — Terminal E (8-pin) • Is there the continuity?	Yes	Replace the audio control switch. (See 09–20–7 AUDIO CONTROL SWITCH REMOVAL/ INSTALLATION.)
		No	Repair or replace the related wiring harnesses.

NO.1 AF NOISE OR POP NOISE ON ALL SOURCES (RADIO, CD, CASSETTE TAPE)

E6U090366900W04

1	AF noise or POP noise on all sources (Radio, CD, Cassette tape)/Possible DTC: 09:Er20, 09:Er21

Troubleshooting hints

Low vehicle battery voltage.

- Jammed radio signals from after market equipment.
- Speaker malfunction (e.g., any foreign material, broken)
- Improper speaker installation
- Audio unit malfunction
- Audio amplifier malfunction (with BOSE)
- Poor connection of audio unit connector, terminal damage
- Antenna malfunction (e.g., poor ground)
- Open or short circuit in wiring harness between audio amplifier and ground (with BOSE)
- Woofer malfunction (with BOSE)
- Poor connection of woofer connector, terminal damage (with BOSE)

Note

- AF noise is "Petit Petit" noise that generally occurs with switch ON/OFF operations of electrical equipment other than the audio unit, or "Gee" continual noise that occurs when electrical equipment is operated. This is caused by noise entrance to the power supply wiring, signal wiring, speaker cable or head of cassette deck etc. Therefore noise can be heard regardless of radio wave condition or audio volume position. The noise will start after one click from the minimum position of volume button but normally does not change even when volume is turned to higher position.
- POP noise is "Putsun", "Poco" or "Putsun" noise that occurs with switch ON/OFF operation of the audio unit, or with switching Radio to CD. Even normal audio unit sometimes emit small noise depending on conditions.

Diagnostic procedure

STEP	INSPECTION		ACTION
1	• Inspect the vehicle battery voltage. • Is the vehicle battery voltage normal? **Specification:** **Ignition switch ON: 11.5 V or more** **Idle: 12.5 V or more**	Yes	Go to the next step.
		No	Charge the battery, then go to the next step.
2	• Turn the audio system on. • Is there any noise?	Yes	Go to the next step.
		No	The system is normal. Explain to the customer that the vehicle battery voltage was low.
3	• Is any of the following after-market equipment installed? (Inspect especially near the antenna.) — Radar — Remote engine starter — Anti-theft device — Other	Yes	Go to the next step.
		No	Go to the Step 5.
4	• Remove the after-market equipment. • Turn the audio system on. • Is there any noise?	Yes	Go to the next step.
		No	The system is normal. The after-market electrical devices might make a noise.
5	• Is there the noise from all speakers?	Yes	Go to the Step 7.
		No	Go to the next step.
6	• Inspect the suspect speaker. • Is the speaker normal?	Yes	Go to the next step.
		No	**If there is any foreign material on the speaker:** • Remove the foreign material from the speaker. **If the speaker is malfunctioning:** • Replace the speaker. (See 09–20–9 FRONT DOOR SPEAKER REMOVAL/INSTALLATION.) (See 09–20–10 REAR DOOR SPEAKER REMOVAL/INSTALLATION.) (See 09–20–11 WOOFER REMOVAL/INSTALLATION [SPORT SEDAN].) (See 09–20–11 WOOFER REMOVAL/INSTALLATION [5-DOOR, SPORT WAGON].) (See 09–20–10 TWEETER REMOVAL/INSTALLATION.) **If the speaker is not installed properly:** • Install the speaker properly.

STEP	INSPECTION		ACTION
7	• Attempt to duplicate the symptom on the other vehicle. • Is the noise better than the customer's vehicle?	Yes	Go to the next step. (with BOSE) Go to Step 11. (without BOSE)
		No	The system is normal. Explain the noise generation mechanism to the customer. **Note** • The noise may be heard depends on the operating speed of audio power and/or mode switch.
8	• Is there any noise from the woofer?	Yes	Go to the next step.
		No	Go to Step 11.
9	• Turn the ignition switch to the LOCK position. • Remove the woofer. • Inspect the connection of the woofer connector (6-pin) terminal A (B+), B (GND), G (WOOF IN+) and H (WOOF IN-). • Is the connector connected securely?	Yes	Replace the woofer. (See 09–20–11 WOOFER REMOVAL/INSTALLATION [SPORT SEDAN].) (See 09–20–11 WOOFER REMOVAL/INSTALLATION [5-DOOR, SPORT WAGON].)
		No	Repair or replace the terminal or connector. Go to the next step.
10	• Is there any noise?	Yes	Replace the woofer. (See 09–20–11 WOOFER REMOVAL/INSTALLATION [SPORT SEDAN].) (See 09–20–11 WOOFER REMOVAL/INSTALLATION [5-DOOR, SPORT WAGON].)
		No	The system is normal.
11	• Turn the ignition switch to the LOCK position. • Remove the audio unit. • Inspect the connection of the audio unit connector (24-pin) (for sound signal line). • Is the connector connected securely?	Yes	Go to Step 13. (with BOSE) Go to Step 14. (without BOSE)
		No	Repair or replace the terminal or connector. Go to the next step.
12	• Is there any noise?	Yes	Go to the next step. (with BOSE) Go to Step 14. (without BOSE)
		No	The system is normal.
13	• Turn the ignition switch to the LOCK position. • Disconnect the audio amplifier connector. • Inspect between the audio amplifier wiring harness-side connector (26-pin) terminal V and ground. • Is there continuity?	Yes	Go to Step 15.
		No	Repair or replace the terminal or connector. Go to the nex step.
14	• Is there any noise?	Yes	Go to the next step.
		No	The system is normal.
15	• Inspect the ground condition of the manual antenna. • Is the ground condition normal?	Yes	Replace the audio amplifier. (See 09–20–8 AUDIO AMPLIFIER REMOVAL/INSTALLATION.)
		No	Repair or replace the ground. Go to the next step.
16	• Is there any noise?	Yes	Replace the audio amplifier. (See 09–20–8 AUDIO AMPLIFIER REMOVAL/INSTALLATION.)
		No	The system is normal.

NO.2 NO POWER ON THE ENTIRE AUDIO SYSTEM

E6U090366900W05

2	No power on the entire audio system/Possible DTC: 09:Er20

Troubleshooting hints

Poor connection of audio unit connector, terminal damage

- Audio unit malfunction
- Burnt fuse (B+)
- Burnt fuse (ACC)
- Open or short circuit in power supply (B+) wiring harness
- Open or short circuit in power supply (ACC) wiring harness

Diagnostic procedure

STEP	INSPECTION		ACTION
1	• Turn the ignition switch to the LOCK position. • Inspect the following fuses: — ACC — ROOM • Are the fuses normal?	Yes	Go to the next step.
		No	Replace with the appropriate standard fuse. • If the fuse is melted, inspect the wiring harness for short to ground. Repair or replace the wiring harness, then replace the fuse.
2	• Remove the audio unit. • Inspect the connection of the audio unit connector (24-pin). • Disconnect the audio unit connector and inspect both the audio unit and wiring harness-side connectors for poor connection. (such as damaged/pulled-out pins, corrosion). — Terminal 1B (B+) — Terminal 1R (ACC) — Terminal 1W (GND) • Are all the pins normal?	Yes	Go to the next step.
		No	**If poor connection of audio unit connector:** • Securely connect the audio unit connector. **If the audio unit side connector is wrong:** • Replace the audio unit. (See 09–20–4 CENTER PANEL UNIT REMOVAL/INSTALLATION.) (See 09–20–5 CENTER PANEL UNIT DISASSEMBLY/ASSEMBLY.) (See 09–20–6 AUDIO UNIT DISASSEMBLY/ASSEMBLY.) **If the wiring harness-side connector is wrong:** • Repair or replace the pins and/or the connector.
3	• Connect the audio unit connector. • Inspect the voltage for the power supply line (B+, ACC). **Specification:** **Ignition switch ON: 11.5 V or more** **Idle: 12.5 V or more** • Is the voltage normal?	Yes	Go to the next step.
		No	Repair or replace the related wiring harnesses.
4	• Turn the ignition switch to the LOCK position. • Remove the audio unit connector (24-pin). • Inspect the continuity between the audio unit wiring harness-side connector terminal 1W and the ground. • Is there the continuity?	Yes	Replace the audio unit. (See 09–20–4 CENTER PANEL UNIT REMOVAL/INSTALLATION.) (See 09–20–5 CENTER PANEL UNIT DISASSEMBLY/ASSEMBLY.) (See 09–20–6 AUDIO UNIT DISASSEMBLY/ASSEMBLY.)
		No	Repair or replace the wiring harness.

NO.3 NO SOUND FROM ALL SPEAKERS [VEHICLES WITH BOSE]

E6U090366900W06

3	**No sound from all speakers/Possible DTC: 00:Er10, 03:Er07, 03:Er10, 06:Er07, 06:Er10, 09:Er20, 09:Er21, 10:Er10, 11:Er10, 22:Er07, 22:Er10**

Troubleshooting hints

- Speaker malfunction (e.g., any foreign material, broken)
- Audio amplifier malfunction
- Open or Short circuit in wiring harness between audio amplifier and speaker
- Open or short circuit in wiring harness between audio amplifier and audio unit.
- Short circuit inside speaker

Diagnostic procedure

STEP	INSPECTION		ACTION
1	• Press AUDIO CONT button more than 1 second. • Play the CD or Radio. • Adjust the volume between "10" to "15". • Is there the sound?	Yes	The system is normal.
		No	Go to the next step.
2	• Measure the voltage at the audio amplifier terminal U. (vehicle harness-side) • Is the voltage B+?	Yes	Go to Step 4.
		No	Repair or replace the wiring harness between the audio amplifier and fuse. Go to the next step.
3	• Is there any sound?	Yes	The system is normal.
		No	Go to the next step.
4	• Turn the ignition switch to the LOCK position. • Disconnect the audio amplifier connector (26-pin). • Inspect the continuity between the following terminals of the audio amplifier connector and the speaker connector: **For front door speaker (LH)** — Terminal B — Terminal B — Terminal D — Terminal A **For front door speaker (RH)** — Terminal Y — Terminal A — Terminal W — Terminal B **For rear door speaker (LH)** — Terminal C — Terminal B — Terminal A — Terminal A **For rear door speaker (RH)** — Terminal X — Terminal B — Terminal Z — Terminal A — Is there a continuity?	Yes	Go to the next step.
		No	Repair or replace the repair related wiring harnesses.
4	• Turn the ignition switch to the LOCK position. • Disconnect the audio amplifier connector (26-pin). • Inspect the continuity between the audio amplifier connector and ground: **For front door speaker** — Terminal B (LH+) — GND — Terminal D (LH-) — GND — Terminal W (RH+) — GND — Terminal Y (RH+) — GND **For rear door speaker** — Terminal C (LH+) — GND — Terminal A (LH-) — GND — Terminal X (RH+) — GND — Terminal Z (RH-) — GND — Is there a continuity?	Yes	Repair or replace the related wiring harnesses or speaker unit. **Note** • If there is a short circuit between the speaker harness or speaker lead wire and ground, the protector circuit inside the audio unit operates to cut the sound.
		No	Go to the next step.
5	• Turn the ignition switch to the LOCK position. • Disconnect the audio amplifier connector (26-pin) and audio unit connector (24-pin). • Inspect the continuity between the audio amplifier terminal Q (vehicle harness-side) (AMP CONT) and the audio unit terminal 1J (vehicle harness-side). — Is there a continuity?	Yes	Replace the audio amplifier. (See 09–20–8 AUDIO AMPLIFIER REMOVAL/INSTALLATION.)
		No	Repair or replace the wiring harness between the audio amplifier and the audio unit. Go to the next step.
6	• Is there any sound?	Yes	The system is normal.
		No	Replace the audio amplifier. (See 09–20–8 AUDIO AMPLIFIER REMOVAL/INSTALLATION.)

NO.3 NO SOUND FROM ALL SPEAKERS [VEHICLES WITHOUT BOSE]

E6U090366900W07

3	**No sound from all speakers/Possible DTC: 00:Er10, 03:Er07, 03:Er10, 06:Er07, 06:Er10, 09:Er20, 09:Er21, 10:Er10, 11:Er10, 22:Er07, 22:Er10**

oubleshooting hints

- Speaker malfunction (e.g., any foreign material, broken)
- Audio unit malfunction
- Short circuit in wiring harness between audio unit and speaker
- Short circuit inside speaker

Diagnostic procedure

STEP	INSPECTION		ACTION
1	• Press AUDIO CONT button more than 1 second. • Play the CD or Radio. • Adjust the volume between "10" to "15". • Is there the sound?	Yes	The system is normal.
		No	Go to the next step.
2	• Turn the ignition switch to the LOCK position. • Remove the audio unit. • Disconnect the audio connector (24-pin). • Inspect the continuity between the audio unit wiring harness-side connector terminal and ground: **For front speaker** — Terminal 1A (LH+) — GND — Terminal 1C (LH-) — GND — Terminal 1D (RH+) — GND — Terminal 1F (RH-) — GND **For rear speaker** — Terminal 1S (LH+) — GND — Terminal 1U (LH-) — GND — Terminal 1V (RH+) — GND — Terminal 1X (RH-) — GND — Is there a continuity?	Yes	Repair or replace the related wiring harnesses or speaker unit. **Note** • If there is a short circuit between the speaker harness or speaker lead wire and ground, the protector circuit inside the audio unit operates to cut the sound.
		No	Replace the audio unit. (See 09–20–4 CENTER PANEL UNIT REMOVAL/INSTALLATION.) (See 09–20–5 CENTER PANEL UNIT DISASSEMBLY/ASSEMBLY.) (See 09–20–6 AUDIO UNIT DISASSEMBLY/ASSEMBLY.)

09–03

NO.4 NO SOUND FROM SOME SPEAKERS [VEHICLES WITH BOSE]

E6U090366900W08

4	**No sound from some speaker/Possible DTC: —**

Troubleshooting hints

- Speaker malfunction (e.g., any foreign material, broken)
- Audio unit malfunction
- Audio amplifier malfunction
- Short circuit inside speaker
- Open or short circuit in wiring harness between audio amplifier and speaker
- Open or short circuit in wiring harness between audio amplifier and audio unit
- Poor connection of audio unit connector, terminal damage
- Poor connection of audio amplifier connector

Diagnostic procedure

STEP	INSPECTION		ACTION
1	• Turn the audio unit on. • Press AUDIO CONT button more than one second (BAL/FAD cancel mode). • Press the POWER button and simultaneously press the AUTO-M button for approx. 1 s. **Note** • The sounded speaker now changes in the order of left— door speaker, right — door speaker, right — rear speaker and left — rear speaker. • Is there any speaker with no sound?	Yes	**If no sound from some speaker:** • Go to the next step. **If no sound at all:** • Go to the troubleshooting of "No.3 No sound from all speakers".
		No	The troubleshooting is completed.
2	• Does the same speaker have no sound if changing the sound source? (radio, CD)	Yes	Go to the next step.
		No	Replace the audio unit. (See 09–20–4 CENTER PANEL UNIT REMOVAL/ INSTALLATION.) (See 09–20–5 CENTER PANEL UNIT DISASSEMBLY/ ASSEMBLY.) (See 09–20–6 AUDIO UNIT DISASSEMBLY/ASSEMBLY.) **Note** • If the different speaker has no sound now, the audio unit is malfunctioning.
3	• Turn the ignition switch to the LOCK position. • Inspect the connection of the audio unit connector (24-pin). (for sound signal line) • Is the connector connected securely?	Yes	Go to the next step.
		No	Connect the audio unit connector (24-pin) securely.
4	• Turn the ignition switch to the LOCK position. • Remove the audio unit. • Disconnect the audio unit connector (24-pin). • Inspect the continuity between the audio unit wiring harness-side connector and ground. **For front door speaker** — Terminal 1A (LH+) — GND — Terminal 1C (LH-) — GND — Terminal 1D (RH+) — GND — Terminal 1F (RH-) — GND **For rear door speaker** — Terminal 1S (LH+) — GND — Terminal 1U (LH-) — GND — Terminal 1V (RH+) — GND — Terminal 1X (RH-) — GND • Is there a continuity?	Yes	Go to the next step.
		No	Go to Step 6.
5	• Disconnect the audio amplifier connector (26-pin). • Inspect the continuity between the following terminals of the audio amplifier wiring harness-side connector (26-pin) and the audio unit wiring harness-side connector (24-pin). **For front door speaker** — Terminal H (LH+) — Terminal 1A (LH+) — Terminal G (LH-) — Terminal 1C (LH-) — Terminal L (RH+) — Terminal 1D (RH+) — Terminal K (RH-) — Terminal 1F (RH-) **For rear door speaker** — Terminal J (LH+) — Terminal 1S (LH+) — Terminal I (LH-) — Terminal 1U (LH-) — Terminal H (RH+) —Terminal 1V (RH+) — Terminal F (RH-) — Terminal 1X (RH-) • Is there a continuity?	Yes	Go to the next step.
		No	Repair or replace the related wiring harnesses between the audio amplifier and the audio unit. Go to the next step.

STEP	INSPECTION		ACTION
6	• Inspect the connection of the audio amplifier connector (26-pin). • Is the connector connected securely?	Yes	Go to the next step.
		No	Connect the audio amplifier connector (26-pin) securely.
7	• Disconnect the audio amplifier (26-pin) and the speaker connector. • Inspect the continuity between the following terminals of the audio amplifier connector (26-pin) and the speaker connector. **For front door speaker (LH)** — Terminal B — Terminal B — Terminal D — Terminal A **For front door speaker (RH)** — Terminal Y — Terminal A — Terminal W — Terminal B **For rear door speaker (LH)** — Terminal C — Terminal B — Terminal A — Terminal A **For rear door speaker (RH)** — Terminal X — Terminal B — Terminal Z — Terminal A • Is there a continuity?	Yes	Go to the next step.
		No	Repair or replace the wiring harness.
8	• Inspect the continuity between the following terminals of the audio amplifier wiring harness-side connector (26-pin) and ground. **For front door speaker** — Terminal B (LH+) — GND — Terminal D (LH-) — GND — Terminal W (RH+) — GND — Terminal Y (RH-) — GND **For rear door speaker** — Terminal C (LH+) — GND — Terminal A (LH-) — GND — Terminal X (RH+) — GND — Terminal Z (RH-) — GND • Is there a continuity?	Yes	Repair or replace the short circuit between the audio amplifier and speaker harness or inside the speaker unit. **Note** • If there is a short circuit between the speaker harness or speaker lead wire and ground, the protector circuit inside the audio amplifier operates to cut the sound.
		No	Go to the next step.
9	• Remove the suspect speaker. • Disconnect the speaker connector (2-pin) and inspect the resistance of speaker. • Is the resistance normal? **Specification:** • Speaker resistance + wiring harness resistance **Note** • If the speaker lead wire contacts to either ground or vehicle frame, replace the speaker.	Yes	Replace the audio amplifier. (See 09–20–8 AUDIO AMPLIFIER REMOVAL/INSTALLATION.)
		No	Replace the speaker. (See 09–20–9 FRONT DOOR SPEAKER REMOVAL/INSTALLATION.) (See 09–20–10 REAR DOOR SPEAKER REMOVAL/INSTALLATION.) (See 09–20–11 WOOFER REMOVAL/INSTALLATION [SPORT SEDAN].) (See 09–20–11 WOOFER REMOVAL/INSTALLATION [5-DOOR, SPORT WAGON].) (See 09–20–10 TWEETER REMOVAL/INSTALLATION.)

NO.4 NO SOUND FROM SOME SPEAKERS [VEHICLES WITHOUT BOSE]

E6U090366900W09

4	No sound from some speaker/Possible DTC: —

Troubleshooting hints

- Speaker malfunction (e.g., any foreign material, broken)
- Audio unit malfunction
- Short circuit inside speaker
- Open or short circuit in wiring harness between audio unit and speaker
- Poor connection of audio unit connector, terminal damage

Diagnostic procedure

STEP	INSPECTION		ACTION
1	• Turn the audio unit on. • Press AUDIO CONT button more than one second (BAL/FAD cancel mode). • Press the POWER button and simultaneously press the AUTO-M button for approx. 1 s. **Note** • The sounded speaker now changes in the order of left— door speaker, right — door speaker, right — rear speaker and left — rear speaker. • Is there any speaker with no sound?	Yes	**If no sound from some speaker:** • Go to the next step. **If no sound at all:** • Go to the troubleshooting of "No.3 No sound from all speakers".
		No	The troubleshooting is completed.
2	• Does the same speaker have no sound if changing the sound source? (radio, CD)	Yes	Go to the next step.
		No	Replace the audio unit. (See 09–20–4 CENTER PANEL UNIT REMOVAL/ INSTALLATION.) (See 09–20–5 CENTER PANEL UNIT DISASSEMBLY/ ASSEMBLY.) (See 09–20–6 AUDIO UNIT DISASSEMBLY/ASSEMBLY.) **Note** • If the different speaker has no sound now, the audio unit is malfunctioning.
3	• Turn the ignition switch to the LOCK position. • Inspect the connection of the audio unit connector (24-pin). (for sound signal line) • Is the connector connected securely?	Yes	Go to the next step.
		No	Connect the audio unit connector (24-pin) securely.
4	• Turn the ignition switch to the LOCK position. • Remove the audio unit. • Disconnect the audio unit connector (24-pin). • Inspect the continuity between the audio unit wiring harness-side connector and ground. **For door speaker** — Terminal 1A (LH+) — GND — Terminal 1C (LH-) — GND — Terminal 1D (RH+) — GND — Terminal 1F (RH-) — GND **For rear speaker** — Terminal 1S (LH+) — GND — Terminal 1U (LH-) — GND — Terminal 1V (RH+) — GND — Terminal 1X (RH-) — GND • Is there a continuity?	Yes	Repair or replace the related wiring harnesses or speaker unit. **Note** • If there is a short circuit between the speaker harness or speaker lead wire and ground, the protector circuit inside the audio unit operates to cut the sound.
		No	Go to the next step.
5	• Remove the suspect speaker. • Disconnect the speaker connector (2-pin) and inspect the resistance of speaker. • Is the resistance normal? **Specification:** • Speaker resistance + wiring harness resistance **Note** • If the speaker lead wire contacts to either ground or vehicle frame, replace the speaker.	Yes	Replace the speaker. (See 09–20–9 FRONT DOOR SPEAKER REMOVAL/ INSTALLATION.) (See 09–20–10 REAR DOOR SPEAKER REMOVAL/ INSTALLATION.) (See 09–20–11 WOOFER REMOVAL/INSTALLATION [SPORT SEDAN].) (See 09–20–11 WOOFER REMOVAL/INSTALLATION [5-DOOR, SPORT WAGON].) (See 09–20–10 TWEETER REMOVAL/INSTALLATION.)
		No	Replace the audio unit. (See 09–20–4 CENTER PANEL UNIT REMOVAL/ INSTALLATION.) (See 09–20–5 CENTER PANEL UNIT DISASSEMBLY/ ASSEMBLY.) (See 09–20–6 AUDIO UNIT DISASSEMBLY/ASSEMBLY.)

NO.5 BROKEN SOUND OR POOR SOUND QUALITY

E6U090366900W10

5	Broken sound or poor sound quality/Possible DTC: 09:Er21

Troubleshooting hints

Speaker malfunction (e.g., any foreign material, broken)
- Improper speaker installation
- Audio unit malfunction (without BOSE)
- Audio amplifier malfunction (with BOSE)
- Vibration of door trim and/or package trim

Diagnostic procedure

STEP	INSPECTION		ACTION
1	• Are there a broken sound or poor sound quality from all speakers?	Yes	Go to the next step.
		No	Go to Step 5.
2	• Inspect the sound while adjusting the sound volume. • Is there a broken sound or poor sound quality between "15" and "20"?	Yes	Go to the next step.
		No	The system is normal.
3	• Inspect the BASS/TREB. • Is there a poor sound quality at "-3 — +3" of "BASS/TREB"? **Note** • When press the AUDIO CONT button for a few seconds, BASS/TREB is set at "0".	Yes	Go to the next step.
		No	If there is a broken sound at "-6—+6" of BASS/TREB with the maximum volume, the system is normal.
4	• Attempt to duplicate the symptom on the other vehicle. • Is the sound better than the customer's vehicle?	Yes	Replace the audio unit. (without BOSE) (See 09-20-4 CENTER PANEL UNIT REMOVAL/INSTALLATION.) (See 09-20-5 CENTER PANEL UNIT DISASSEMBLY/ASSEMBLY.) (See 09-20-6 AUDIO UNIT DISASSEMBLY/ASSEMBLY.) Replace the audio amplifier. (with BOSE) (See 09-20-8 AUDIO AMPLIFIER REMOVAL/INSTALLATION.)
		No	The system is normal.
5	• Identify the speaker with a broken sound by adjusting BAL/FADE. • Is the suspect speaker installed upward?	Yes	Go to Step 7.
		No	Go to the next step.
6	• Inspect the speaker installation condition. • Is the speaker installed properly?	Yes	Go to the next step.
		No	Install the speaker properly.
7	• Remove the speaker. • Is there any foreign material or damage on the speaker?	Yes	Repair or replace the suspect speaker.
		No	Go to the next step.
8	• Inspect the sound again. • Is there broken sound?	Yes	Go to the next step.
		No	Inspect the vibration from the door trim and/or package trim. Repair or replace the suspect trim as necessary.
9	• Replace with the speaker known to be good. (e.g., swap right and left speakers) • Does the broken sound appear at the same location?	Yes	Replace the audio unit. (without BOSE) (See 09-20-4 CENTER PANEL UNIT REMOVAL/INSTALLATION.) (See 09-20-5 CENTER PANEL UNIT DISASSEMBLY/ASSEMBLY.) (See 09-20-6 AUDIO UNIT DISASSEMBLY/ASSEMBLY.) Replace the audio amplifier. (with BOSE) (See 09-20-8 AUDIO AMPLIFIER REMOVAL/INSTALLATION.)
		No	Replace the speaker. (See 09-20-9 FRONT DOOR SPEAKER REMOVAL/INSTALLATION.) (See 09-20-10 REAR DOOR SPEAKER REMOVAL/INSTALLATION.) (See 09-20-11 WOOFER REMOVAL/INSTALLATION [SPORT SEDAN].) (See 09-20-11 WOOFER REMOVAL/INSTALLATION [5-DOOR, SPORT WAGON].) (See 09-20-10 TWEETER REMOVAL/INSTALLATION.)

NO.6 SOUND BECOMES LOUDLY OR WEAKLY WHILE DRIVING THE VEHICLE

E6U090366900W11

6	Sound becomes loudly or weakly while driving the vehicle/Possible DTC: —

Troubleshooting hints

- Audio unit malfunction

Note

- Inspect the ALC function while driving the vehicle with playing the CD, etc.

Diagnostic procedure

STEP	INSPECTION		ACTION
1	• Does the ALC function turn on?	Yes	Go to the next step.
		No	Replace the audio unit. (See 09–20–4 CENTER PANEL UNIT REMOVAL/ INSTALLATION.) (See 09–20–5 CENTER PANEL UNIT DISASSEMBLY/ ASSEMBLY.) (See 09–20–6 AUDIO UNIT DISASSEMBLY/ASSEMBLY.)
2	• Turn the ALC function off. • Does the sound change while driving the vehicle?	Yes	Replace the audio unit. (See 09–20–4 CENTER PANEL UNIT REMOVAL/ INSTALLATION.) (See 09–20–5 CENTER PANEL UNIT DISASSEMBLY/ ASSEMBLY.) (See 09–20–6 AUDIO UNIT DISASSEMBLY/ASSEMBLY.)
		No	The system is normal. Explains the ALC function to the customer.

NO.7 ALC FUNCTION IS INOPERATIVE

E6U090366900W12

7	ALC function is inoperative/Possible DTC: 16:Er12, 17:Er11

Troubleshooting hints

- Audio unit malfunction
- Open or short circuit in vehicle speed signal wiring harness (e. g., instrument cluster)

Note

- Inspect the ALC function while driving the vehicle with playing the CD, etc.

Diagnostic procedure

STEP	INSPECTION		ACTION
1	• Turn the ALC function on. • Inspect the ALC function operation when driving the vehicle. • Does the ALC system operate properly?.	Yes	The system is normal. Explains the ALC function to the customer.
		No	Go to the next step.
2	• Retrieve the DTCs from all vehicle modules using the WDS or equivalent. • Is there the following DTC displayed? — Vehicle speed signal wiring harness — Can signal wiring harness	Yes	Go to the appropriate DTC inspection.
		No	Replace the audio unit. (See 09–20–4 CENTER PANEL UNIT REMOVAL/ INSTALLATION.) (See 09–20–5 CENTER PANEL UNIT DISASSEMBLY/ ASSEMBLY.) (See 09–20–6 AUDIO UNIT DISASSEMBLY/ASSEMBLY.)

NO.8 AUDIO SYSTEM ILLUMINATION DOES NOT ILLUMINATE AT ALL

E6U090366900W13

8	Audio system illumination does not illuminate at all/Possible DTC: 09:Er20, 21:Er19

Troubleshooting hints

Poor connection of audio unit connector, terminal damage

- Audio unit malfunction
- Burnt fuse (TNS signal)
- Open or short circuit in TNS signal wiring harness
- Center panel malfunction

Diagnostic procedure

STEP	INSPECTION		ACTION
1	• Are all illumination on the audio unit turned OFF?	Yes	Go to the next step.
		No	Replace the center panel. (See 09–20–4 CENTER PANEL UNIT REMOVAL/ INSTALLATION.) (See 09–20–5 CENTER PANEL UNIT DISASSEMBLY/ ASSEMBLY.)
2	• Turn the ignition switch to the LOCK position. • Inspect the fuse (ILLUMI). • Is the fuse normal?	Yes	Go to the Step 4.
		No	Go to the next step.
3	• Turn the ignition switch to the LOCK position. • Disconnect the audio unit connector (24-pin) and inspect the continuity between the audio unit wiring harness-side connector terminal 1E (TNS) and the ground. • Is there continuity?	Yes	Repair or replace the short circuit in the suspect wiring harness. After repair the harness, replace with the appropriate standard fuse.
		No	Go to the next step.
4	• Inspect the connection of the audio unit connector (24-pin). • Inspect both the audio unit and wiring harness-side connector terminal 1E for poor connection (such as damaged/pulled-out pins, corrosion). • Are all the pins normal?	Yes	Go to the next step.
		No	**If poor connection of audio unit connector:** • Securely connect the audio unit connector. **If the audio unit side connector is wrong:** • Replace the audio unit. (See 09–20–4 CENTER PANEL UNIT REMOVAL/ INSTALLATION.) (See 09–20–5 CENTER PANEL UNIT DISASSEMBLY/ ASSEMBLY.) (See 09–20–6 AUDIO UNIT DISASSEMBLY/ ASSEMBLY.) **If the wiring harness-side connector is wrong:** • Repair or replace the pins and/or the connector.
5	• Connect the audio unit connector (24-pin). • Turn the ignition switch to the ACC position. • Inspect the voltage at the audio unit connector terminal 1E (TNS). • Is the voltage **B+** when the light switch is turned to the TNS position?	Yes	Replace the audio unit. (See 09–20–4 CENTER PANEL UNIT REMOVAL/ INSTALLATION.) (See 09–20–5 CENTER PANEL UNIT DISASSEMBLY/ ASSEMBLY.) (See 09–20–6 AUDIO UNIT DISASSEMBLY/ASSEMBLY.)
		No	Repair or replace the related wiring harness (TNS signal).

NO.9 INFORMATION DISPLAY DOES NOT DISPLAY AT ALL

E6U090366900W14

9	Information display does not display at all/Possible DTC: 09:Er20, 21:Er19

Troubleshooting hints

- Audio unit malfunction
- Center panel display malfunction

Diagnostic procedure

STEP	INSPECTION		ACTION
1	• Turn the audio unit on. • Press the POWER button and simultaneously press the SEEK button for **approx. 0.2 s.** • Does the information display properly?	Yes	Go to the next step.
		No	Replace the information display. (See 09–22–24 INFORMATION DISPLAY REMOVAL/ INSTALLATION.)
2	• Press either CLC or SET button on the information display. • Does the beep sound?	Yes	Replace the audio unit. (See 09–20–4 CENTER PANEL UNIT REMOVAL/ INSTALLATION.) (See 09–20–5 CENTER PANEL UNIT DISASSEMBLY/ ASSEMBLY.) (See 09–20–6 AUDIO UNIT DISASSEMBLY/ASSEMBLY.)
		No	Replace both audio unit and information display. (CAN communication malfunction) (See 09–20–4 CENTER PANEL UNIT REMOVAL/ INSTALLATION.) (See 09–20–5 CENTER PANEL UNIT DISASSEMBLY/ ASSEMBLY.) (See 09–20–6 AUDIO UNIT DISASSEMBLY/ASSEMBLY.) (See 09–22–24 INFORMATION DISPLAY REMOVAL/ INSTALLATION.)

FOREWORD [CD PLAYER/CHANGER]

E6U090366900W15

Troubleshooting Index

No.	Items	Symptom	Possible DTC
1	CD player/changer	CD player/changer does not load the CD or ejects the CD immediately	03:Er01, 03:Er10, 06:Er01, 06:Er10, 10:Er01, 10:Er10, 22:Er01, 22:Er10
2		CD player/changer does not eject the CD	03:Er01, 06:Er01, 10:Er01, 22:Er01
3		CD player/changer does not play the CD/No sound	03:Er07, 03:Er10, 06:Er07, 10:Er07, 22:Er07
4		Sound jumps	03:Er02, 06:Er02, 10:Er02, 22:Er02
5		CD player/changer scratches on the CD	03:Er02, 06:Er02, 10:Er02, 22:Er02
6	CD changer	Disc changer is inoperative	06:Er01, 06:Er10, 22:Er01, 22:Er10
7	MP3 applicable CD player	CD player does not play the MP3-formatted file	10:Er07, 22:Er07
8		MP3-formatted file folder selection is inoperative/Track search is inoperative	10:Er02, 22:Er02
9		CD player does not indicate the MP3 title text	10:Er02, 22:Er02
10		CD player does not play the audio data (CDDA)	10:Er02, 22:Er02
11	CD player/changer	Track change is inoperative	03:Er02, 06:Er02, 10:Er02, 22:Er02

X: Applicable

Troubleshooting Item / Possible factor	CD player/changer					CD player	MP3 applicable CD player/changer				CD player/changer
	1	2	3	4	5	6	7	8	9	10	11
	CD player/changer does not load the CD or ejects the CD immediately	CD player/changer does not eject the CD	CD player/changer does not play the CD/No sound	Sound jumps	Scratches on the CD	Disc change is inoperative	CD player does not play the MP3-formatted file	MP3-formatted file folder selection is inoperative/ Track search is inoperative	CD player does not indicate the MP3 title text	CD player does not play the audio data (CODA)	Track change is inoperative
CD is inserted upside down	X		X								
Audio unit is malfunctioning	X	X	X	X	X	X					X
Defective CD (egg., cracked, badly bent, rough edges, scratch, dirty CD, condensation)	X	X	X	X							X
Non-conventional discs (e.g., 8 cm (3 in) CD, 8 cm (3 in) disc adapter, heart-shaped disc, octagonal disc)	X	X	X								X
Poor connection of audio unit connector or terminal (e.g., damaged, bent, pull-out pin, corrosion)	X	X									
Improper center panel installation		X				X					
nproper CD cover installation		X									
mproper audio unit installation (e.g., rattle, loose)				X							
Inadequate tire pressure				X							
Deformed disc is used (e.g., out of specification (thickness), bent disc)	X	X			X						
Multiple CDs are inserted into the CD player at the same time		X			X						
Center panel is malfunctioning						X					X
CD-R/RW written format is out of specification							X			X	
MP3 and other format data are on the CD-R/RW							X				
File extension for MP3-formatted file is incorrect (Correct: ".mp3", Incorrect: e.g., RIFF)							X				
Defective CD-R/RW (e.g., dirty CD, scratch)							X	X	X	X	
Conflict of ID tag version for CD-R/RW								X	X		
Improper folder and/or music title in CD-R/RW								X			
The number of characters for the folder/music file name on the CD-R/RW exceeds the maximum number of characters								X	X		
Improper encode on CD-R/RW								X	X		
MP3 applicable CD player is malfunctioning							X	X	X	X	X
No title input in CD-R/RW									X		
Input title text using 2-byte characters									X		
Data other than audio data is in CD-R/RW										X	

E5U903AZW5S0

NO.1 CD PLAYER/CHANGER DOES NOT LOAD THE CD OR EJECTS THE CD IMMEDIATELY

E6U090366900W16

1	**CD player/changer does not load the CD or ejects the CD immediately** **Possible DTC: 03:Er01, 03:Er10, 06:Er01, 06:Er10, 10:Er01, 10:Er10, 22:Er01, 22:Er10**

Troubleshooting hints

- CD is inserted upside down
- Audio units is malfunctioning
- Defective CD (e.g., cracked, badly bent, rough edges, scratch, dirty CD, condensation)
- Non-conventional discs (e.g., 8 cm (3 in) CD, 8 cm (3 in) disc adapter, heart-shaped disc, octagonal disc)
- Poor connection of audio unit connector or terminal (e.g., damaged, bent, pulled-out pin, corrosion)
- Deformed disc is used (e.g., out of specification (thickness), bent disc)

Diagnostic procedure

STEP	INSPECTION		ACTION
1	• Is CD inserted properly, label-side up?	Yes	Go to the next step.
		No	Explain to the customer that CD should be inserted into the slot, label-side up.
2	• Replace with a CD known to be operational. • Does the CD player/changer load the CD?	Yes	Go to the next step.
		No	Replace the audio unit. (See 09–20–4 CENTER PANEL UNIT REMOVAL/ INSTALLATION.) (See 09–20–5 CENTER PANEL UNIT DISASSEMBLY/ ASSEMBLY.) (See 09–20–6 AUDIO UNIT DISASSEMBLY/ASSEMBLY.)
3	Visually inspect the CD. — Is there any dirt, scratch or deformation on the CD? — Is the CD a non-conventional disc?	Yes	Explain to the customer that the defective CD or non-conventional disc cannot be use.
		No	Go to the next step.
4	• Turn the ignition switch to the LOCK position. • Inspect the connection of the audio unit connector (24-pin). • Inspect both audio unit connector and wiring harness-side connector for poor connection. (such as damaged/bent/pulled-out pins, corrosion) • All the pins and connector normal?	Yes	Replace the audio unit. (See 09–20–4 CENTER PANEL UNIT REMOVAL/ INSTALLATION.) (See 09–20–5 CENTER PANEL UNIT DISASSEMBLY/ ASSEMBLY.) (See 09–20–6 AUDIO UNIT DISASSEMBLY/ASSEMBLY.)
		No	**If the audio unit connector/pin is wrong:** • Replace the audio unit. (See 09–20–4 CENTER PANEL UNIT REMOVAL/ INSTALLATION.) (See 09–20–5 CENTER PANEL UNIT DISASSEMBLY/ ASSEMBLY.) (See 09–20–6 AUDIO UNIT DISASSEMBLY/ ASSEMBLY.) **If the wiring harness-side connector/pin is wrong:** • Repair or replace the pins and/or the connector.

NO.2 CD PLAYER/CHANGER DOES NOT EJECT THE CD

E6U090366900W17

2	**CD player/changer does not eject the CD** **Possible DTC:03:Er01, 06:Er01, 10:Er01, 22:Er01**

Troubleshooting hints

- Audio units is malfunctioning
- Defective CD. (e.g., cracked, badly bent, rough edges, scratch, dirty CD, condensation)
- Non-conventional discs (e.g., 8 cm (3 in) CD, 8 cm (3 in) disc adapter, heart-shaped disc, octagonal disc)
- Poor connection of audio unit connector or terminal (e.g., damaged, bent, pulled-out pin, corrosion)
- Improper center panel installation
- Improper CD cover installation
- Deformed disc is used (e.g., out of specification (thickness), bent disc).
- Multiple CDs are inserted into the CD player at the same time

Note

- The CD may be malfunctioning if the CD player/changer does not eject the certain CD only. Inspect the CD player/changer operation using the CD known to be operational.

Diagnostic procedure

STEP	INSPECTION		ACTION
1	• Inspect the operation of the audio system other than CD player/changer (e.g. Radio). • Does other audio system operate?	Yes	Go to Step 3.
		No	Go to the next step.
2	• Turn the ignition switch to the LOCK position. • Inspect the connection of the audio unit connector (24-pin). • Inspect both audio unit connector and wiring harness-side connector for poor connection. (such as damaged/bent/pulled-out pins, corrosion) • All the pins and connector normal?	Yes	Go to the next step.
		No	**If the audio unit connector/pin is wrong:** • Replace the audio unit. (See 09–20–4 CENTER PANEL UNIT REMOVAL/INSTALLATION.) (See 09–20–5 CENTER PANEL UNIT DISASSEMBLY/ASSEMBLY.) (See 09–20–6 AUDIO UNIT DISASSEMBLY/ASSEMBLY.) **If the wiring harness-side connector/pin is wrong:** • Repair or replace the pins and/or the connector.
3	• Eject the CD. • Is the CD ejected from the CD player/changer?	Yes	Go to the next step.
		No	Inspect the center panel and CD cover installation. Securely install the center panel and/or CD cover as necessary.
4	• Insert the CD into the CD player/changer. • Does the CD insert into the CD player/changer smoothly?	Yes	Replace the audio unit. (See 09–20–4 CENTER PANEL UNIT REMOVAL/INSTALLATION.) (See 09–20–5 CENTER PANEL UNIT DISASSEMBLY/ASSEMBLY.) (See 09–20–6 AUDIO UNIT DISASSEMBLY/ASSEMBLY.)
		No	Install the center panel and/or CD cover properly, then go to the next step.
5	• Is the CD ejected from the CD player/changer?	Yes	Troubleshooting completed. Explain repairs to the customers.
		No	Replace the audio unit. (See 09–20–4 CENTER PANEL UNIT REMOVAL/INSTALLATION.) (See 09–20–5 CENTER PANEL UNIT DISASSEMBLY/ASSEMBLY.) (See 09–20–6 AUDIO UNIT DISASSEMBLY/ASSEMBLY.)

NO.3 CD PLAYER/CHANGER DOES NOT PLAY THE CD/NO SOUND

E6U090366900W18

3	**CD player/changer does not play the CD/No sound** **Possible DTC:03:Er07, 03:Er10, 06:Er07, 10:E07, 22:Er07**

Troubleshooting hints

- CD is inserted upside down
- Audio units is malfunctioning
- Defective CD (e.g., cracked, badly bent, rough edges, scratch, dirty CD, condensation)
- Non-conventional discs (e.g., 8 cm (3 in) CD, 8 cm (3 in) disc adapter, heart-shaped disc, octagonal disc)

Diagnostic procedure

STEP	INSPECTION		ACTION
1	• Turn the radio ON and inspect that there is a sound. • Is there a sound? **Note** • Check for the volume dial position.	Yes	Go to the next step.
		No	Go to the symptom troubleshooting No.3 (Audio system).
2	• Was CD inserted properly, label-side up?	Yes	Go to the next step.
		No	Explain to the customer that CD should be inserted into the slot, label-side up.
3	• Replace with a CD known to be operational. • Does the CD player/changer load the CD?	Yes	Go to the next step.
		No	Replace the audio unit. (See 09–20–4 CENTER PANEL UNIT REMOVAL/ INSTALLATION.) (See 09–20–5 CENTER PANEL UNIT DISASSEMBLY/ ASSEMBLY.) (See 09–20–6 AUDIO UNIT DISASSEMBLY/ASSEMBLY.)
4	• Visually inspect the CD. — Is there any dirt, scratch or deformation on the CD? — Is the CD a non-conventional disc? — Is there a CD in MP3 recording?	Yes	Explain to the customer that the defective CD or non-conventional disc cannot be use.
		No	Replace the audio unit. (See 09–20–4 CENTER PANEL UNIT REMOVAL/ INSTALLATION.) (See 09–20–5 CENTER PANEL UNIT DISASSEMBLY/ ASSEMBLY.) (See 09–20–6 AUDIO UNIT DISASSEMBLY/ASSEMBLY.)

NO.4 SOUND JUMPS

E6U090366900W19

4	**Sound jumps** **Possible DTC:03:Er02, 06:Er02, 10:Er02, 22:Er02**

Troubleshooting hints

- Audio unit is malfunctioning
- Defective CD (e.g., cracked, badly bent, rough edges, scratch, dirty CD, condensation)
- Improper audio unit installation (e.g., rattle, loose)
- Inadequate tire pressure

Note

- The CD may be malfunctioning if the sound jumps on the certain CD only. Inspect the CD player/changer operation using a CD known to be operational.

Diagnostic procedure

STEP	INSPECTION		ACTION
1	• Does the sound jump when the vehicle is stopped?	Yes	Go to the Step 6.
		No	Go to the next step.
2	• Drive the vehicle. • Does the sound jump when driving over uneven surfaces?	Yes	Go to the next step.
		No	Go to the Step 6.
3	• Is the audio unit installed securely?	Yes	Go to the next step.
		No	Install the audio unit securely.
4	• Inspect the tire pressure. • Is the tire pressure normal?	Yes	Replace the audio unit. (See 09–20–4 CENTER PANEL UNIT REMOVAL/ INSTALLATION.) (See 09–20–5 CENTER PANEL UNIT DISASSEMBLY/ ASSEMBLY.) (See 09–20–6 AUDIO UNIT DISASSEMBLY/ASSEMBLY.)
		No	Go to the next step.
5	• Adjust the tire pressure within specification. • Does the sound jump when driving the vehicle?	Yes	Replace the audio unit. (See 09–20–4 CENTER PANEL UNIT REMOVAL/ INSTALLATION.) (See 09–20–5 CENTER PANEL UNIT DISASSEMBLY/ ASSEMBLY.) (See 09–20–6 AUDIO UNIT DISASSEMBLY/ASSEMBLY.)
		No	Audio system is normal. Explain repairs to the customers.
6	• Replace with a CD known to be operational. • Does the sound jump when driving the vehicle?	Yes	Replace the audio unit. (See 09–20–4 CENTER PANEL UNIT REMOVAL/ INSTALLATION.) (See 09–20–5 CENTER PANEL UNIT DISASSEMBLY/ ASSEMBLY.) (See 09–20–6 AUDIO UNIT DISASSEMBLY/ASSEMBLY.)
		No	Audio system is normal. Explain to the customer that the CD is malfunctioning.

NO.5 CD PLAYER/CHANGER SCRATCHES ON THE CD

E6U090366900W20

5	**CD player/changer scratches on the CD** **Possible DTC:03:Er02, 06:Er02, 10:Er02, 22:Er02**

Troubleshooting hints

- Audio unit is malfunctioning
- Deformed disc is used (e.g., out of specification (thickness), bent disc)
- Multiple CDs are inserted into the CD player at the same time

Diagnostic procedure

STEP	INSPECTION		ACTION
1	• Were the multiple CDs inserted into the CD player at the same time?	Yes	Explain to the customer to insert a CD one by one.
		No	Go to the next step.
2	• Visually inspect the CD. • Is the CD a deformed disc (e.g., out of specification (thickness), bent disc)?	Yes	Audio system is normal. Explain to the customer that the CD is malfunctioning.
		No	Replace the audio unit. (See 09–20–4 CENTER PANEL UNIT REMOVAL/ INSTALLATION.) (See 09–20–5 CENTER PANEL UNIT DISASSEMBLY/ ASSEMBLY.) (See 09–20–6 AUDIO UNIT DISASSEMBLY/ASSEMBLY.)

NO.6 DISC CHANGE IS INOPERATIVE

E6U090366900W21

6	**Disc change is inoperative** **Possible DTC:06:Er01, 06:Er10, 22:Er01, 22:Er10**

Troubleshooting hints

- Audio unit is malfunctioning
- Improper center panel installation
- Center panel is malfunctioning

Diagnostic procedure

STEP	INSPECTION		ACTION
1	• Inspect the CD changer operation. • Does the CD changer operate properly?	Yes	Go to the next step.
		No	Go to the symptom troubleshooting "No.3 CD player/ changer does not play the CD/No sound".
2	• Inspect the followings: — Is the display shown properly when operating the disc change button? — Does the radio band selection operate properly?	Yes	Replace the audio unit. (See 09–20–4 CENTER PANEL UNIT REMOVAL/ INSTALLATION.) (See 09–20–5 CENTER PANEL UNIT DISASSEMBLY/ ASSEMBLY.) (See 09–20–6 AUDIO UNIT DISASSEMBLY/ASSEMBLY.)
		No	Go to the next step.
3	• Inspect the center panel installation. • Does the CD changer change the disc properly after re-installing the center panel?	Yes	Install the center panel securely and properly.
		No	Go to the "No.1 Audio panel switch inspection" in this section. Replace the center panel as necessary.

NO.7 CD PLAYER DOES NOT PLAY THE MP3-FORMATTED FILE

E6U090366900W22

7	CD player does not play the MP3-formatted file Possible DTC10:Er07, 22:Er07

Troubleshooting hints

- CD-R/RW written format is out of specification
- MP3 and other format data are on the CD-R/RW
- File extension for MP3-formatted file is incorrect (Correct. ".mp3", incorrect: e.g., RIFF)
- Defective CD-R/RW (e.g. dirty CD, scratch)
- MP3 applicable CD player is malfunctioning

Note

- Free-software for MP3-formatting available on the market may cause deterioration of sound quality, or cause noise and defective play, which could result in the CD player not playing customer made MP3-formatted files.
- The CD player may not play the CD-R/RW properly due to the disc condition.
- If there are MP3-formatted files and other files on the same disc, the CD player may not play the disc.
- If there are MP3-formatted files and audio data on the same disc, the CD player loads and plays the first session of the data only.

Diagnostic procedure

STEP	INSPECTION		ACTION
1	• Inspect the written format of the recorded data on the CD-R/RW. • Is the written format correct?	Yes	Go to the next step.
		No	Write the CD-R/RW to the correct specification.
2	• Inspect the recorded data on the CD-R/RW. • Are there MP3 and other format data on the CD-R/RW.	Yes	Replace with an operational CD-R/RW disc (MP3-formatted file data only), then inspect the CD player operation. **If the CD player plays the MP3-formatted file:** • Audio system is normal. Explain to the customer that the CD player does not operate properly if MP3 and other format data are on the CD-R/RW. **If the CD player does not play the MP3-formatted file:** • Replace the audio unit. (See 09–20–4 CENTER PANEL UNIT REMOVAL/INSTALLATION.) (See 09–20–5 CENTER PANEL UNIT DISASSEMBLY/ASSEMBLY.) (See 09–20–6 AUDIO UNIT DISASSEMBLY/ASSEMBLY.)
		No	Go to the next step.
3	• Inspect the CD-R/RW written format. • Is the written format within the specification (".mp3" is the correct file extension)?	Yes	Replace with a CD-R/RW disc using the ".mp3" file extension, then inspect the CD player operation. **If the CD player plays the MP3-formatted file:** • Audio system is normal. Explain to the customer that the CD player does not operate properly if the correct file extension is not used. **If the CD player does not play the MP3-formatted file:** • Replace the audio unit. (See 09–20–4 CENTER PANEL UNIT REMOVAL/INSTALLATION.) (See 09–20–5 CENTER PANEL UNIT DISASSEMBLY/ASSEMBLY.) (See 09–20–6 AUDIO UNIT DISASSEMBLY/ASSEMBLY.)
		No	Go to the next step.
4	• Visually inspect the CD-R/RW. • Is there any dirt or scratches on the CD-R/RW?	Yes	Clean the disc or replace it with an operational CD-R/RW.
		No	Replace the audio unit. (See 09–20–4 CENTER PANEL UNIT REMOVAL/INSTALLATION.) (See 09–20–5 CENTER PANEL UNIT DISASSEMBLY/ASSEMBLY.) (See 09–20–6 AUDIO UNIT DISASSEMBLY/ASSEMBLY.)

NO.8 MP3-FORMATTED FILE FOLDER SELECTION IS INOPERATIVE/TRACK SEARCH IS INOPERATIVE

E6U090366900W23

8	**MP3-formatted file folder selection is inoperative/Track search is inoperative** **Possible DTC:10:Er02, 22:Er02**

Troubleshooting hints

- Defective CD-R/RW (e.g. dirty CD, scratch)
- Conflict of ID tag version for CD-R/RW
- Improper folder and/or music title in CD-R/RW
- The number of characters for the folder/audio file name on the CD-R/RW exceeds the maximum number of characters
- Improper encode on CD-R/RW
- MP3 applicable CD player is malfunctioning

Note

- ID3 is a tagging format for MP3-formatted files. ID3 allows metadata (e.g., title, artist, track number) to be added to the MP3-formatted file.
- There are two versions in the ID tag.
  - — ID3v1: This is the most widespread standard tag format and most software is compatible with this version. There is a limitation on the maximum number of characters for the text data.
  - — ID3v2: There are a variety of versions in V2, but there is no interchangeability among the versions.

Limitation on the maximum number of characters for the text data (ID3v1)

Item	Maximum number of characters	Description
Title	30	Music title
Artist	30	Artist name
Album	30	Album title
Year	4	Album produced year/CD wholesale year
Genre	—	Music category selection
Comment	30	Free comment
Track	3	Track number

Diagnostic procedure

STEP	INSPECTION		ACTION
1	• Visually inspect the CD-R/RW. • Is there any dirt or scratches on the CD-R/RW?	Yes	Clean the disc or replace it with an operational CD-R/RW.
		No	Go to the next step.
2	• Inspect the ID tag version. • Is the ID tag correct?	Yes	Go to the next step.
		No	Write the CD-R/RW to the correct ID tag version.
3	• Inspect folder and audio file name. • Are all file name input correctly?	Yes	Go to the next step.
		No	Use a CD-R/RW with folder and audio file names that are input correctly.
4	• Inspect the the folder and audio file names on the CD-R/RW. • Is the encode correct? **Note** • Unreadable characters may be displayed if incorrect encode is used.	Yes	Go to the next step.
		No	Use the correct encode.
5	• Inspect the number of characters for the folder and audio file name. • Is the number of characters within the maximum number of characters?	Yes	Replace the audio unit. (See 09–20–4 CENTER PANEL UNIT REMOVAL/INSTALLATION.) (See 09–20–5 CENTER PANEL UNIT DISASSEMBLY/ASSEMBLY.) (See 09–20–6 AUDIO UNIT DISASSEMBLY/ASSEMBLY.)
		No	Input the folder and audio file name within the maximum number of characters.

NO.9 CD PLAYER DOES NOT INDICATE THE MP3 TITLE TEXT

E6U090366900W24

9	CD player does not indicate the MP3 title text Possible DTC:10:Er02, 22:Er02

Troubleshooting hints

- Defective CD-R/RW (e.g. dirty CD, scratch)
- Conflict of ID tag version for CD-R/RW
- The number of characters for the folder/audio file name on the CD-R/RW exceeds the maximum number of characters
- Improper encode in CD-R/RW
- MP3 applicable CD player is malfunctioning
- No title input in CD-R/RW
- Input title text using 2-byte characters

Diagnostic procedure

STEP	INSPECTION		ACTION
1	• Visually inspect the CD-R/RW. • Is there any dirt or scratches on the CD/R/RW?	Yes	Clean the disc or replace it with an operational CD-R/RW.
		No	Go to the next step.
2	• Inspect the LCD. • Is the CD (other than MP3 compatible) displayed on the LCD?	Yes	Go to the next step.
		No	Go to the symptom troubleshooting No.9 (Entire audio system).
3	• Inspect the ID tag version. • Is the ID tag correct?	Yes	Go to the next step.
		No	Write the CD-R/RW to the correct ID tag version.
4	• Is the title text input into the CD-R/RW?	Yes	Go to the next step.
		No	Input the title text. **Note** • Do not input the title text using two-byte characters.
5	• Inspect the folder and audio file names on the CD-R/RW. • Is the encode correct?	Yes	Go to the next step.
		No	Use the correct encode.
6	• Inspect the number of characters for the folder and audio file name. • Is the number of characters within the maximum number of characters?	Yes	Replace the audio unit. (See 09–20–4 CENTER PANEL UNIT REMOVAL/INSTALLATION.) (See 09–20–5 CENTER PANEL UNIT DISASSEMBLY/ASSEMBLY.) (See 09–20–6 AUDIO UNIT DISASSEMBLY/ASSEMBLY.)
		No	Input the folder and audio file name within the maximum number of characters.

NO.10 CD PLAYER DOES NOT PLAY THE AUDIO DATA (CDDA)

E6U090366900W25

10	CD player does not play the audio data (CDDA) Possible DTC:10:Er02, 22:Er02

Troubleshooting hints

- CD-R/RW written format is out of specification
- Defective CD-R/RW (e.g., dirty CD, scratch)
- MP3 applicable CD player is malfunctioning
- Data other than audio data is on CD-R/RW

Note

- The CD player may not play the CD-R/RW properly due to the disc condition.
- If there are MP3-formatted files and audio data on the same disc, the CD player loads and plays the first session of the data only.

Diagnostic procedure

STEP	INSPECTION		ACTION
1	• Replace with an audio-CD known to be operational. • Does the CD player play the audio-CD properly?	Yes	Go to the next step.
		No	Replace the audio unit. (See 09–20–4 CENTER PANEL UNIT REMOVAL/ INSTALLATION.) (See 09–20–5 CENTER PANEL UNIT DISASSEMBLY/ ASSEMBLY.) (See 09–20–6 AUDIO UNIT DISASSEMBLY/ASSEMBLY.)
2	• Inspect the written format of the recorded data on the CD-R/RW. • Is the written format correct?	Yes	Go to the next step.
		No	Write the CD-R/RW to the correct specification.
3	• Inspect the recorded data in the CD-R/RW. • Is any data other than the audio data recorded on the CD-R/RW?	Yes	Replace with a CD-R/RW known to be operational (record audio data only), then inspect the CD player operation. **If the CD-R/RW plays:** • Audio system is normal. Explain to the customer that the CD player does not operate properly if the audio data and other data are recorded on the CD-R/RW. **If the CD-R/RW does not play:** • Replace the audio unit. (See 09–20–4 CENTER PANEL UNIT REMOVAL/ INSTALLATION.) (See 09–20–5 CENTER PANEL UNIT DISASSEMBLY/ ASSEMBLY.) (See 09–20–6 AUDIO UNIT DISASSEMBLY/ ASSEMBLY.)
		No	Go to the next step.
4	• Visually inspect the CD-R/RW. • Is there any dirt or scratches on the CD-R/RW?	Yes	Clean the disc or replace it with an operational CD-R/RW.
		No	Replace the audio unit. (See 09–20–4 CENTER PANEL UNIT REMOVAL/ INSTALLATION.) (See 09–20–5 CENTER PANEL UNIT DISASSEMBLY/ ASSEMBLY.) (See 09–20–6 AUDIO UNIT DISASSEMBLY/ASSEMBLY.)

NO.11 TRACK CHANGE IS INOPERATIVE

E6U090366900W26

11	**Track change is inoperative** **Possible DTC:03:Er02, 06:Er02, 10:Er02, 22:Er02**

Troubleshooting hints

- Audio unit is malfunctioning
- Defective CD (e.g., cracked, badly bent, rough edges, scratch, dirty CD, condensation)
- Non-conventional discs (e.g., 8 cm (3 in) CD, 8 cm (3 in) disc adapter, heart-shaped disc, octagonal disc)
- Center panel is malfunctioning
- MP3 applicable CD player is malfunctioning

Diagnostic procedure

STEP	INSPECTION		ACTION
1	• Replace with a CD known to be operational. • Does the CD player change the track?	Yes	Explain to the customer that the defective CD or non-conventional disc cannot be used.
		No	Go to the next step.
2	• Inspect the center panel installation. • Does the CD player change the track number on the display when pressing the track up or down button?	Yes	Replace the audio unit. (See 09–20–4 CENTER PANEL UNIT REMOVAL/ INSTALLATION.) (See 09–20–5 CENTER PANEL UNIT DISASSEMBLY/ ASSEMBLY.) (See 09–20–6 AUDIO UNIT DISASSEMBLY/ASSEMBLY.)
		No	Go to the "No.1 Audio panel switch inspection" in this section. Replace the center panel as necessary.

FOREWORD [RADIO]

E6U090366900W27

Note

- In case location, time, and broadcasting station etc. can be specified through interview to customer, possibility that signal environment causes problem is high.
- Perform confirmation of symptom and evaluation under conditions that customer reported (location, time, broadcasting station etc.). If not possible, perform it under equivalent conditions.
- Before inspection or repair, record the broadcasting stations that customer preset and reset them accordingly after the inspection or repair. Adjust the clock too.

Troubleshooting Index

No.	Symptom	Possible DTC
1	No radio reception (AM/FM)/No or low volume	09:Er20, 09:Er22
2	Noise from radio (AM only)	09:Er22
3	Noise from radio (FM only)	09:Er22
4	Cannot tune (SEEK does not stop)	09:Er20, 09:Er22
5	Cannot preset (preset function does not operate)	21:Er19
6	Reception frequency of radio slips	09:Er22

Quick Diagnostic Chart (Radio)

X: Applicable

Troubleshooting item / Possible factor	1 No radio reception (AM/FM)/No or low volume	2 Noise from radio (AM only)	3 Noise from radio (FM only)	4 Cannot tune (SEEK does not stop)	5 Cannot preset (preset function does not operate)	6 Reception frequency of radio slips
Jamming from aftermarket electronic equipment (two-way radio, navigation system, mobile phone, etc)	X	X	X			
Audio unit	X	X	X	X	X	X
Antenna plug poor connection	X	X	X	X		
Antenna feeder	X	X	X	X		
Electronic jamming from outside, or inferior condition of broadcasting station radio wave	X	X	X	X		X
Antenna rod not installed	X	X	X	X		
Noise from electrical system on vehicle (e.g. fuel pump)		X	X			
Battery		X	X			
Charging system		X	X			
Antenna installation loosened		X	X			
Center panel				X	X	

DPE903EW1O03

CONFIRMATION STEP 1: RECEPTION CONDITION SYMPTOM (EXAMPLE)

E6U090366900W28

Symptom	Antenna signal condition	Source
Only a buzzing sound from the speakers	• There is no broadcasting wave. • Signals from antenna to audio unit are not transmitted.	• Electric noise caused by the operation of internal circuit from audio unit itself • Atmosphere noise
A buzzing or crunching sound and normal sound produced at the same time from the speakers	• Though signals are transmitted from antenna to audio unit, electric noise from other sources is larger.	• Electrical noise caused by operation of electrical component on vehicle • Electrical noise from high tension wire, transformer substation (factory), electrical feeder line (street car), or motorcycle.
A thumping sound and normal sound produced at the same time from the speakers (FM only)	• Noise occurs due to radio wave environment at specific places (e.g. in valleys between buildings). Noise varies when own vehicle or surrounding vehicles moves. (FM only)	• Interference between direct and reflected waves of FM signals causes noise (Multipass noise).

CONFIRMATION STEP 2: ANTENNA SYSTEM SYMPTOM (EXAMPLE)

E6U090366900W29

Possible cause	AM reception condition	FM reception condition
• Antenna feeder axis, open circuit • Antenna feeder plug not attached	NG: No reception	YES: Reception possible. (Sensitivity decreases, but reception is possible under strong electric field.)
• Antenna feeder axis (+) to ground (-), open circuit	NG: No reception	NG: No reception
• Antenna feeder and antenna, poor ground	YES: Reception possible (Noise may occur)	YES: Reception possible (Sensitivity decreases, but reception is possible under strong electric field.)
• Antenna feeder, jack and plug poor connection	NG: No reception (Depending on connection conditions)	YES: Reception possible (Depending on connection conditions)

CONFIRMATION STEP 3: ANTENNA SYSTEM SIMPLE INSPECTION

E6U090366900W30

Note

- Because the antenna system is equipped with a capacitor, the continuity cannot be checked. Therefore proceed the following simple inspection.
  1. Turn the AM radio on.
  2. Tune to the frequency that there is no broadcast and you will hear a buzzing sound.
  3. Turn a work light on and shake it around the antenna rod (around 10—20 mm)
  4. If a whirring sound from the speaker synchronized to the work light movement is confirmed, the antenna system is normal.

Note

- Use a fluorescent light type for the inspection. Accurate diagnostic cannot be done with an incandescent light.

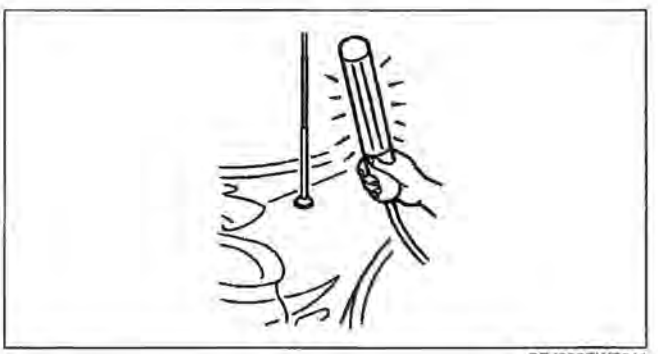

CPJ902EWB011

NO.1 NO RADIO RECEPTION (AM/FM)/NO OR LOW VOLUME

E6U090366900W31

1	No radio reception (AM/FM)/no or low volume/Possible DTC: 09:Er20, 09:Er22
POSSIBLE CAUSE	• Jamming from aftermarket electronic equipment (two-way radio, navigation system, mobile phone, etc.) • Audio unit malfunction • Antenna plug poor connection • Antenna feeder malfunction • Electronic jamming from outside, or inferior condition of broadcasting station radio wave • Antenna rod is not installed

Diagnostic procedure

STEP	INSPECTION		ACTION
1	• Turn the audio unit on. • Is the LCD indicated correctly?	Yes	Go to Step 3.
		No	Go to the next step.
2	• Measure voltage at B+ and ACC terminals. • Is voltage okay? **Specification** **With ignition switch ON: 11.5 V or more** **At idling: 12.5 V or more**	Yes	Go to the next step.
		No	Follow diagnostic procedure for symptom No. 2 (Entire audio system).
3	• Set volume to 10 to 15. • Is buzzing sound or voice confirmed?	Yes	Go to the next step.
		No	Follow diagnostic procedure for symptom No. 3 (Entire audio system) or No. 4 (Entire audio system).
4	• Tune to local broadcasting station and check reception condition. • Is reception okay?	Yes	Go to the next step.
		No	Go to Step 6.
5	• Push PRESET buttons and check preset conditions. • Has preset been stored?	Yes	The system is normal.
		No	Preset broadcasting stations.
6	• Is aftermarket electronic equipment (two-way radio, navigation system, mobile phone, etc.) installed? **Note** • TV antenna located closely to audio antenna can be cause of noise. Relocate TV antenna.	Yes	Go to the next step.
		No	Go to Step 8.
7	• Remove aftermarket electronic equipment. • Turn the audio unit on and check reception condition. • Is reception improved?	Yes	The system is normal. (Explain to customers that aftermarket electronic equipment is cause of noise)
		No	Go to the next step.
8	• Refer to confirmation step 3, and inspect antenna system. • Is a whirring sound present?	Yes	Replace audio unit. (See 09–20–4 CENTER PANEL UNIT REMOVAL/INSTALLATION.) (See 09–20–5 CENTER PANEL UNIT DISASSEMBLY/ASSEMBLY.) (See 09–20–6 AUDIO UNIT DISASSEMBLY/ASSEMBLY.)
		No	Go to the next step.
9	• Inspect antenna plug connection condition. • Is connection okay?	Yes	Go to the next step.
		No	Insert antenna plug securely.
10	• Turn the ignition switch to the LOCK position. • Measure continuity between antenna feeder axis and ground. • Is there any continuity?	Yes	Replace antenna feeder. (See 09–20–15 ANTENNA FEEDER LOCATION [SPORT SEDAN].) (See 09–20–15 ANTENNA FEEDER LOCATION [5-DOOR].) (See 09–20–16 ANTENNA FEEDER LOCATION [SPORT WAGON].)
		No	Go to the next step.

STEP	INSPECTION		ACTION
11	• Compare reception with other audio unit on same model (model/unit) under same problem conditions. • Is reception equivalent between customer's unit and compared unit? **Note** • Due to following differences, you may feel difference in reception efficiency. **(Vehicle side factor)** — Antenna installation location, height, feeder wiring routing, optional electrical equipment **(Audio unit factor)** — Volume concern type: It decreases change of volume when signals become weak. (Noise is easy to be conspicuous) — Noise decrease type: It decreases volume when signals become weak, so that noise is not conspicuous.	Yes	The system is normal. (It is caused by electronic jamming from outside, or inferior broadcasting station signal condition.)
		No	Replace audio unit. (See 09–20–4 CENTER PANEL UNIT REMOVAL/ INSTALLATION.) (See 09–20–5 CENTER PANEL UNIT DISASSEMBLY/ ASSEMBLY.) (See 09–20–6 AUDIO UNIT DISASSEMBLY/ASSEMBLY.)

NO.2 NOISE FROM RADIO (AM ONLY)

E6U090366900W32

2	Noise from radio (am only)/Possible DTC: 09:Er22
POSSIBLE CAUSE	• Antenna rod not installed • Jamming from aftermarket electronic equipment (two-way radio, navigation system, mobile phone, etc.) • Noise from electrical system on vehicle (e.g. fuel pump) • Battery malfunction • Charging system malfunction • Audio unit malfunction • Antenna plug poor connection • Antenna feeder malfunction • Electronic jamming from outside, or inferior condition of broadcasting station radio wave • Antenna installation loosened

Diagnostic procedure

STEP	INSPECTION		ACTION
1	• Tune to local broadcasting station and check reception condition. • Is reception okay?	Yes	Tune to correct frequency of broadcasting station. If not preset, preset it.
		No	Go to the next step.
2	• Inspect antenna rod condition. • Is antenna rod installed?	Yes	Go to the next step.
		No	Advise customer to install antenna rod when radio is used.
3	• Is aftermarket electronic equipment (two-way radio, navigation system, mobile phone, etc.) installed? **Note** • TV antenna located closely to audio antenna can be cause of noise. Relocate TV antenna.	Yes	Go to the next step.
		No	Go to Step 5.
4	• Remove aftermarket electronic equipment. • Turn audio unit on and check reception condition. • Is reception improved?	Yes	The system is normal. (Explain to customers that aftermarket electronic equipment is cause of noise)
		No	Go to the next step.
5	• Measure battery voltage. • Is battery voltage okay? **Standard** **With ignition switch ON: 11.5 V or more** **At idling: 12.5 V or more** **Note** • Inspect that battery cables are connected to terminals securely.	Yes	Go to the next step.
		No	Charge battery. Inspect charging system, and repair or replace if necessary.

STEP	INSPECTION		ACTION
6	• Is noise occurring only when vehicle electrical system (e.g. fuel pump) operates? **Note** • Identify subject electrical component by disconnecting fuse, turning switch ON & OFF, or disconnecting & connecting connector. • It will be easy when simulation function on WDS is used.	Yes	Go to the next step.
		No	Go to Step 8.
7	• Inspect power supply, ground condition, and noise prevention capacitor for electrical component. • Is noise present after inspection? **Note** • Inspect following: — Power supply to electrical component for voltage drop (compare with battery voltage) — Resistance between ground of electrical component and body. (Should be close to 0 ohm) — Installation condition of noise prevention capacitor for fuel pump etc.	Yes	Go to the next step.
		No	Troubleshooting completed. **Note** • The audio unit supplies 12 V battery power to the antenna amplifier for the AM radio reception in the radio mode. The audio unit cannot receive the AM signals without the 12 V battery power to the antenna amplifier. If the AM signals become strong, the audio unit may receive the signal with noises.
8	• Inspect antenna plug connection condition. • Is connection okay?	Yes	Go to the next step.
		No	Insert antenna plug securely.
9	• Turn the ignition switch to the LOCK position. • Measure continuity between antenna feeder axis and ground. • Is there any continuity?	Yes	Replace antenna feeder. (See 09–20–15 ANTENNA FEEDER LOCATION [SPORT SEDAN].) (See 09–20–15 ANTENNA FEEDER LOCATION [5-DOOR].) (See 09–20–16 ANTENNA FEEDER LOCATION [SPORT WAGON].)
		No	Go to the next step.
10	Compare reception with other audio unit on same model (model/unit) under same problem conditions. • Is reception equivalent between customer's unit and compared unit? **Note** • Due to following differences, you may feel difference in reception efficiency. **(Vehicle side factor)** — Antenna installation location, height, feeder wiring routing, optional electrical equipment **(Audio unit factor)** — Volume concern type: It decreases change of volume when signals become weak. (Noise is easy to be conspicuous) — Noise decrease type: It decreases volume when signals become weak, so that noise is not conspicuous.	Yes	The system is normal (It is caused by electronic jamming from outside, or inferior broadcasting station signal condition).
		No	Go to the next step.
11	• Retighten ground for antenna and antenna amplifier. Retighten antenna rod. • Is noise present, after retightening?	Yes	Replace audio unit. (See 09–20–4 CENTER PANEL UNIT REMOVAL/INSTALLATION.) (See 09–20–5 CENTER PANEL UNIT DISASSEMBLY/ASSEMBLY.) (See 09–20–6 AUDIO UNIT DISASSEMBLY/ASSEMBLY.)
		No	Troubleshooting completed.

NO.3 NOISE FROM RADIO (FM ONLY)

E6U090366900W33

3	Noise from radio (FM only)/Possible DTC: 09:Er22
POSSIBLE CAUSE	• Antenna rod not installed • Jamming from aftermarket electronic equipment (two-way radio, navigation system, mobile phone, etc.) • Noise from electrical system on vehicle (e.g. fuel pump) • Battery malfunction • Charging system malfunction • Audio unit malfunction • Antenna plug poor connection • Antenna feeder malfunction • Electronic jamming from outside, or inferior condition of broadcasting station radio wave • Antenna installation loosened **Note** • FM broadcast has feature "sound quality is good" and "resistant to noise", but FM broadcast has particular noises. Though audio unit is designed to reduce noise, there are times noise occurs due to conditions.

Diagnostic procedure

STEP	INSPECTION		ACTION
1	• Tune to local broadcasting station and check reception condition. • Is reception okay?	Yes	Tune to correct frequency of broadcasting station. If not preset, preset it.
		No	Go to the next step.
2	• Inspect antenna rod condition. • Is antenna rod installed?	Yes	Go to the next step.
		No	Advise customer to install antenna rod when radio is used.
3	• Is aftermarket electronic equipment (two-way radio, navigation system, mobile phone, etc.) installed?	Yes	Go to the next step.
		No	Go to Step 5.
4	• Remove aftermarket electronic equipment. • Turn audio unit ON and check reception condition. • Is reception improved?	Yes	The system is normal. (Explain to customers that aftermarket electronic equipment is cause of noise)
		No	Go to the next step.
5	• Measure battery voltage. • Is battery voltage okay? **Standard** **With ignition switch ON: 11.5 V or more** **At idling: 12.5 V or more** **Note** • Inspect that battery cables are connected to terminals securely.	Yes	Go to the next step.
		No	Charge battery. Inspect charging system, and repair or replace if necessary.
6	• Is noise occurring only when vehicle electrical system (e.g. fuel pump) operates? **Note** • Identify subject electrical component by disconnecting fuse, turning switch ON & OFF, or disconnecting & connecting connector. • It will be easy when simulation function on WDS is used.	Yes	Go to the next step.
		No	Go to Step 8.
7	• Inspect power supply, ground condition, and noise prevention capacitor for electrical component. • Is noise present after inspection? **Note** • Inspect following: — Power supply to electrical component for voltage drop (compare with battery voltage) — Resistance between ground of electrical component and body. (Should be close to 0 ohm) — Installation condition of noise prevention capacitor for fuel pump etc.	Yes	Go to the next step.
		No	Troubleshooting completed.

STEP	INSPECTION		ACTION
8	• Inspect antenna plug connection condition. • Is connection okay?	Yes	Go to the next step.
		No	Insert antenna plug securely.
9	• Turn ignition switch to LOCK position. • Measure continuity between antenna feeder axis and ground. • Is there any continuity?	Yes	Replace antenna feeder. (See 09–20–15 ANTENNA FEEDER LOCATION [SPORT SEDAN].) (See 09–20–15 ANTENNA FEEDER LOCATION [5-DOOR].) (See 09–20–16 ANTENNA FEEDER LOCATION [SPORT WAGON].)
		No	Go to the next step.
10	• Compare reception with other audio unit on same model (model/unit) under same problem conditions. • Is reception equivalent between customer's unit and compared unit?	Yes	The system is normal (It is caused by electronic jamming from outside, or inferior broadcasting station signal condition).
		No	Go to the next step.
11	• Retighten ground fixation for antenna installation part and antenna amplifier. Retighten antenna rod. • Is noise present, after retightening? **Note** • When antenna is not grounded properly, FM noise is likely to be noticed.	Yes	Replace audio unit. (See 09–20–4 CENTER PANEL UNIT REMOVAL/INSTALLATION.) (See 09–20–5 CENTER PANEL UNIT DISASSEMBLY/ASSEMBLY.) (See 09–20–6 AUDIO UNIT DISASSEMBLY/ASSEMBLY.)
		No	Troubleshooting completed.

NO.4 CANNOT TUNE (SEEK DOES NOT STOP)

E6U090366900W34

4	Cannot tune (seek does not stop)/Possible DTC: 09:Er20, 09:Er22
POSSIBLE CAUSE	• Center panel malfunction • Antenna plug poor connection • Antenna feeder malfunction • Audio unit malfunction • Electronic jamming from outside, or inferior condition of broadcasting station radio wave • Antenna rod not installed

Diagnostic procedure

STEP	INSPECTION		ACTION
1	• Inspect if feel of the SEEK button is normal when button is pushed and released. • Is it okay?	Yes	Go to the next step.
		No	Perform confirmation step 1: audio panel switch confirmation. Replace center panel if necessary.
2	• Inspect indication of Information display. • Is frequency indication increased or decreased when the SEEK button is pushed?	Yes	Go to the next step.
		No	Perform confirmation step 1: audio panel switch confirmation. Replace center panel if necessary.
3	• Manually tune to local broadcasting station and check reception condition. • Is reception okay?	Yes	Go to Step 6.
		No	Go to the next step.
4	• Inspect antenna plug connection condition. • Is connection okay?	Yes	Go to the next step.
		No	Insert antenna plug securely.
5	• Turn the ignition switch to the LOCK position. • Measure continuity between antenna feeder axis and ground. • Is there any continuity?	Yes	Replace antenna feeder. (See 09–20–15 ANTENNA FEEDER LOCATION [SPORT SEDAN].) (See 09–20–15 ANTENNA FEEDER LOCATION [5-DOOR].) (See 09–20–16 ANTENNA FEEDER LOCATION [SPORT WAGON].)
		No	Go to the next step.
6	• Check if number of broadcasting stations changes depending on time and place. • Does it change?	Yes	The system is normal. (Explain to customer that SEEK sometimes does not stop depending on signal reception condition.) **Note** • Signals tend to reach longer distances in the night. It is conspicuous in AM signals, several audio functions may stop due to foreign broadcasting station or noise. Though the audio system restrains sensitivity of SEEK and SCAN functions in the night, the audio system may select other than desired broadcasting station when signals are considerably strong. This function is linked to the parking light. When the parking light or headlight is turned on, SEEK and SCAN may not function for weak signals.
		No	Replace audio unit. (See 09–20–4 CENTER PANEL UNIT REMOVAL/INSTALLATION.) (See 09–20–5 CENTER PANEL UNIT DISASSEMBLY/ASSEMBLY.) (See 09–20–6 AUDIO UNIT DISASSEMBLY/ASSEMBLY.)

NO.5 CANNOT PRESET (PRESET FUNCTION DOES NOT OPERATE)

E6U090366900W35

5	Cannot preset (preset function does not operate)/Possible DTC: 21:Er19
POSSIBLE CAUSE	• Audio unit malfunction • Center panel malfunction

Diagnostic procedure

STEP	INSPECTION		ACTION
1	• Tune to desired station and push channel preset button 1 for about 2 seconds to store it. • Repeat above for other stations using channel preset buttons 2 to 5. • Push channel preset button 1 to 6 one by one. • Are stored stations present?	Yes	Go to the next step.
		No	Go to Step 3.
2	• Turn the ignition switch to the LOCK and then to ACC. • Check if preset stations are stored by pushing preset buttons. • Are stations stored?	Yes	The system is normal. (Explain preset procedure to customer using Owner's Manual)
		No	Replace audio unit. (See 09–20–4 CENTER PANEL UNIT REMOVAL/ INSTALLATION.) (See 09–20–5 CENTER PANEL UNIT DISASSEMBLY/ ASSEMBLY.) (See 09–20–6 AUDIO UNIT DISASSEMBLY/ASSEMBLY.)
3	• Remove center panel from audio unit, and reinstall center panel to audio unit to check the connector connections. • Turn audio power switch ON. • Push the POWER button and simultaneously push the CLOCK button for approximately 1 second to enter system to switch check mode. • Push all buttons and check if buzzer sounds. • Are all buttons okay?	Yes	Replace audio unit. (See 09–20–4 CENTER PANEL UNIT REMOVAL/ INSTALLATION.) (See 09–20–5 CENTER PANEL UNIT DISASSEMBLY/ ASSEMBLY.) (See 09–20–6 AUDIO UNIT DISASSEMBLY/ASSEMBLY.)
		No	Replace center panel. (See 09–20–4 CENTER PANEL UNIT REMOVAL/ INSTALLATION.) (See 09–20–5 CENTER PANEL UNIT DISASSEMBLY/ ASSEMBLY.)

NO.6 RECEPTION FREQUENCY OF RADIO SLIPS

E6U090366900W36

6	Reception frequency of radio slip/Possible DTC: 09:Er22
POSSIBLE CAUSE	• Audio unit malfunction • Electronic jamming from outside, or inferior condition of broadcasting station radio wave

Diagnostic procedure

STEP	INSPECTION		ACTION
1	• Push the SEEK button and check if desired broadcasting station is tuned. • Is it okay?	Yes	Go to Step 3.
		No	Go to the next step.
2	• Check if other broadcasting station is received at certain place when indication of reception frequency stays. • Is other station received? **Note** • When you receive weak signal from one broadcasting station and come close to broadcasting antenna which emits strong signal, broadcasting with strong signal is sometimes received.	Yes	Go to the next step.
		No	Replace audio unit. (See 09–20–4 CENTER PANEL UNIT REMOVAL/ INSTALLATION.) (See 09–20–5 CENTER PANEL UNIT DISASSEMBLY/ ASSEMBLY.) (See 09–20–6 AUDIO UNIT DISASSEMBLY/ASSEMBLY.)
3	• Compare reception with other audio unit on same model (model/unit) under same problem conditions. • Is reception equivalent between customer's unit and compared unit?	Yes	Troubleshooting completed (Audio unit is normal).
		No	Replace audio unit. (See 09–20–4 CENTER PANEL UNIT REMOVAL/ INSTALLATION.) (See 09–20–5 CENTER PANEL UNIT DISASSEMBLY/ ASSEMBLY.) (See 09–20–6 AUDIO UNIT DISASSEMBLY/ASSEMBLY.)

RADIO [REFERENCE]

E6U090366900W37

1. Multipath Noise

- Signals from an FM transmitter are a high frequency and similar to beams of light because they do not bend around corners, but they do reflect. Since FM signals can be reflected by obstructions, it is possible to receive both the direct signal and the reflected signal at the same time. This causes a slight delay in reception and may be heard as a broken sound or a distortion.

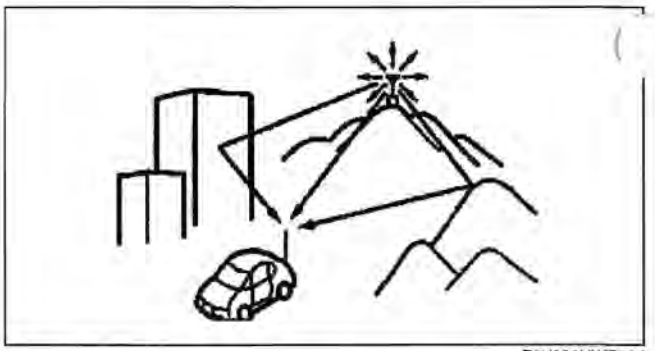

E6U902HWB007

2. Flutter/Skip Noise

- Signals become weak in valleys between mountains, tall building, and other obstacles. When the vehicle passes through such an area, the reception conditions may change suddenly, resulting in annoying noise.

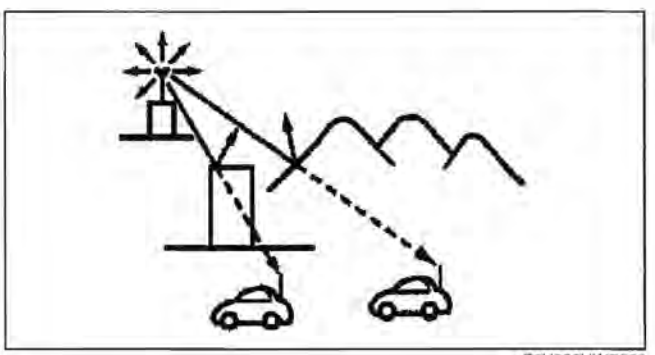

E6U902HWB008

3. Stereo and Monaural Receptions

- As signals become weak, noise may appear more in stereo reception. Comparing to stereo reception, noise in monaural receptions is relatively less striking.

Measures in Audio System

Separation control

- Utilizing the characteristic of monaural reception that noise is relatively less striking than stereo reception, the audio system automatically changes the reception from stereo to monaural and lessens annoying noise when signals become weak or a multipath phenomenon occurs.

High tone control

- When signals become weak or a multipath phenomenon occurs, the audio system restrains volume level in high frequency band and lessens annoying noise.

Effect Setting of Separation Control and High Tone Control

- The separation and high tone controls influence sound quality, Therefore they are specifically tuned for individual model. (Comparison of characteristic must be done on the same models)

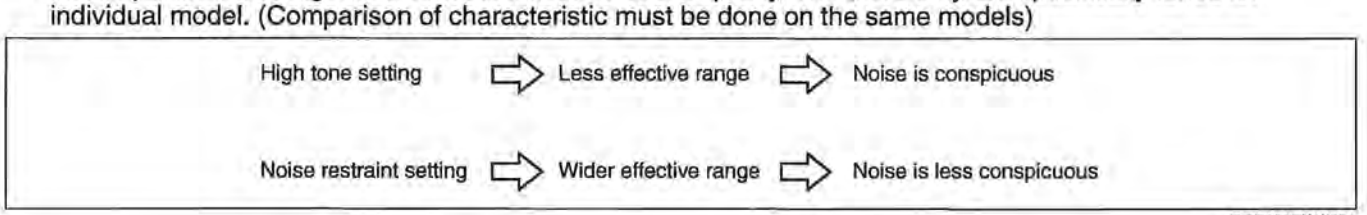

DPE903EW1V0A

Remarks

- Signals tend to reach longer distances in the night. It is conspicuous in AM signals, several audio functions may stop due to foreign broadcasting station or noise. though the audio system restrains sensitivity of SEEK and SCAN functions in the night, the audio system may select other than desired broadcasting station when signals are considerably strong. This function is linked to the parking light. When the parking light or headlight is turned on, SEEK and SCAN may not function for weak signals.

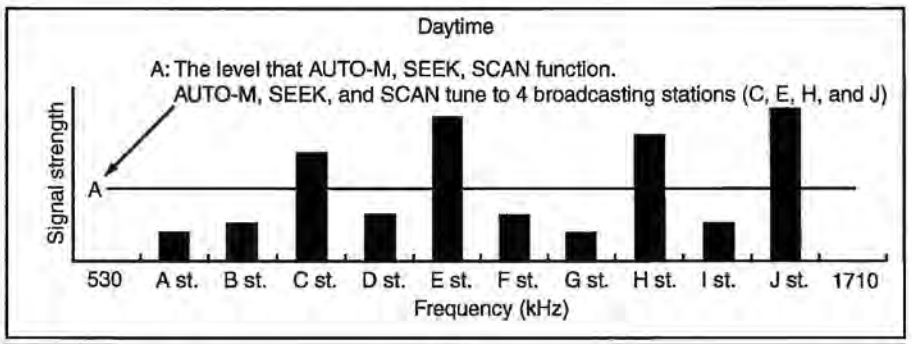

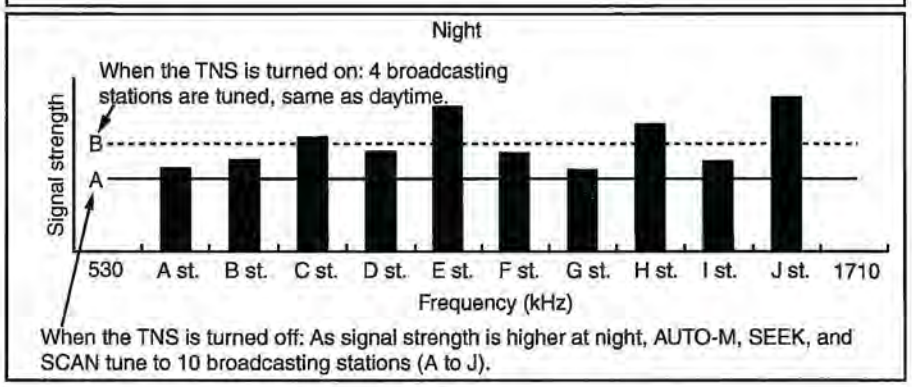

E5U903AZW5S0

09–03C

AUDIO CD [REFERENCE]

E6U090366900W38

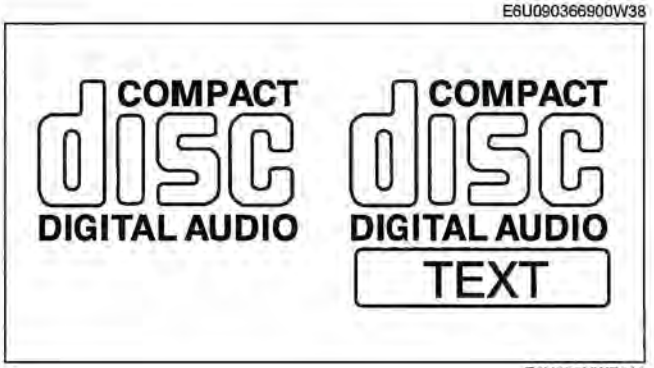

E6U903HWB010

- The CD player/changer has been designed to play CDs bearing the identification logo, COMPACT DISC DIGITAL AUDIO, as shown. No other discs can be played on the CD player/changer other than MP3 applicable one.
- The CD player/changer may not play the following CD:
  - — Defective CD (e.g., cracked, badly bent, rough edges, scratch, dirty CD condensation)
  - — 8 cm (3 in) CDs accessories (e.g., 8 cm (3 in) disc adapter, sticker, label)
  - — Nonstandard CD (e.g., Diameter/thickness is out of specification)
    Specification: 119.7—120.3 mm (4.668—4.692 in) of diameter, 12+0.3 or -0.1 mm (0.047+0.012 or 0.004 in) of thickness
- Do not use non-conventional discs. The CD player/changer could be damaged.

Examples:

- Although the same physical size as the compact disc, SACD uses a different kind of digital audio signal, Direct Stream Digital.
- The CD player/changer may not play the CD-R/RW properly due to the disc condition (excluding the MP3).

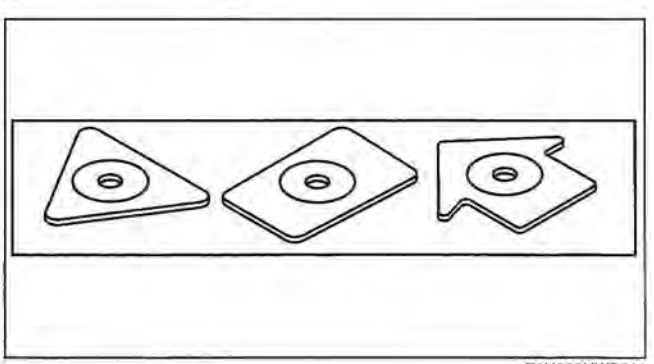

E6U903HWB011

MP3-Formatted File
Outline of CD-R and CD-RW

- Definition
  - — CD-R: The CD-R is a non-rewritable version. Once a section of a CD-R is written, it cannot be erased or rewritten.
  - — CD-RW: The CD-RW is a re-writable version of CD-ROM and can be written the data an unlimited number of times.
- Since a reflected laser beam amount of the CD-R/RW is less than the reflected laser beam amount of the conventional CD media, the CD player/changer may not play the CD-R/RW or have the sound jumped.
- Since the recording quality of the CD-R/RW vary widely, some CD-R/RW may not be played.

Recording method

- There are two methods for recording.
- Classification by recorder
  - — Record the audio data in the audio-CD by audio recorder
    - The price of the audio recorder and original audio-CD includes the copyright fee.
  - — Recorded the audio data in the conventional data-CD by the personal computer
    - The data-CD is cheaper than the audio-CD. But, there is a CD with the low quality.
- Classification by audio data uncompression/compression
  - — Uncompressed audio data
    - The CD-R/RW player can play the uncompressed audio data.
  - — Compressed audio data
    - It is possible to record the large quantity of music in a disc. The sound quality varies depends on the audio data compression format. The compressed audio data can be played on the applicable player only.
  - — Type of compression format:
    - MP3: MPEG Audio Layer 3 — Mazda genie MP3 applicable CD player is available.
    - WMA: Windows Media Audio
    - ATRAG: Adaptive TRansform Acoustic Coding

MP3

- The following condition should be met in order to record the MP3-formatted data on the MP3 applicable CD player:

Media	Applicable to the CD-R/RW
Logical format	ISO 9660 level 1&2 / Joliet / Romeo
Number of directly	8 directly
Number of files	Maximum 255 as a total number of file and folder Maximum 155 for folder
ID3 TAG	Applicable to Ver1.1, 2.3 and 2.4
File extension	MP3
Packet writing	Not applicable
Bit rate	8kbps—320kbps/VBR
Sampling rate	11.025kHz—48kHz

DTC TABLE [AUDIO SYSTEM]

E6U090366900W39

Screen display DTC (When starting on-board diagnostic test function)	Detection condition	Possible cause/inspection
00: Er01	Cassette deck cannot implement insert and eject commands.	Cassette deck malfunction
00: Er03	Reel built into cassette deck does not operate.	Verify condition of the cassette deck.
00: Er04	Cassette tape is worn out.	• Tape wear • Verify condition of the cassette deck.
00: Er10	Cassette deck does not operate.	• Malfunction of connectors between base unit and cassette deck • Cassette deck malfunction
03: Er01	CD player cannot implement insert and eject commands.	CD player malfunction
03: Er02	Cannot change tracks.	CD player malfunction
03: Er07	CD reading error.	• Defective CD (scratches or dirt) • CD player malfunction
03: Er10	CD player does not operate.	• Malfunction of connectors between base unit and CD player • CD player malfunction
05: Er01	CD changer (external) cannot implement insert, eject, and disc change commands.	• Defective CD (curved, broken or foreign material stuck/attached, etc.) • CD changer (external) malfunction
05: Er07	CD reading error.	• Defective CD (curved, broken or foreign material stuck/attached, etc.) • CD changer (external) malfunction
05: Er10	CD changer (external) does not operate.	• Defective CD (curved, broken or foreign material stuck/attached, etc.) • CD changer (external) malfunction
06: Er01	CD changer (upper module) cannot implement insert, eject, and disc change commands.	• Defective CD (curved, broken or foreign material stuck/attached, etc.) • CD changer (upper module) malfunction
06: Er02	Cannot change tracks.	• Defective CD (curved, broken or foreign material stuck/attached, etc.) • CD changer (upper module) malfunction
06: Er07	CD reading error.	• Defective CD (curved, broken or foreign material stuck/attached, etc.) • CD changer (upper module) malfunction
06: Er10	CD changer (upper module) does not operate.	• Malfunction of connectors between base unit and CD changer (upper module) • CD changer (upper module) malfunction
07: Er01	MD player cannot implement insert and eject commands.	MD player malfunction
07: Er02	Cannot change tracks.	MD player malfunction
07: Er07	MD reading error.	Defective MD
07: Er08	Blank unrecorded MD is inserted.	Defective MD
07: Er10	MD player does not operate.	• Malfunction of connectors between base unit and MD player • MD player malfunction
09: Er20	Audio system does not operate.	Voltage at base unit is low.
09: Er21	Broken sound/No sound	Inspect the audio system operation according to vehicle condition.
09: Er22	No radio reception	Inspect the radio operation according to vehicle condition.
10: Er01	MP3 applicable CD player cannot implement insert and eject commands.	MP3 applicable CD player malfunction
10: Er02	Cannot change tracks.	MP3 applicable CD player malfunction
10: Er07	MP3 CD reading error.	Incorrect format CD

Screen display DTC (When starting on-board diagnostic test function)	Detection condition	Possible cause/inspection
10: Er10	MP3 applicable CD player does not operate.	• Malfunction of connectors between base unit and MP3 applicable CD player • MP3 applicable CD player malfunction
11: Er01	SSI bus communication error	• Poor connection of the connectors • Radio unit malfunction • Sirius unit malfunction
11: Er03	Poor connection of antenna	• Poor connection of antenna connector
11: Er10	Radio system does not operate.	• Malfunction of connectors between base unit and Sirius unit • Sirius unit malfunction
16: Er12	—	CAN system
21: Er17	Incorrect combination (base unit and center panel)	Install the correct base unit or the center panel.
21: Er18		
21: Er19	Communication error between base unit and center panel	Malfunction of connectors between base unit and center panel
22: Er01	MP3 applicable CD changer cannot implement insert, eject, and disc change commands.	• Defective CD (curved, broken or foreign material stuck/attached, etc.) • MP3 applicable CD changer malfunction
22: Er02	Cannot change tracks.	• Defective CD (curved, broken or foreign material stuck/attached, etc.) • MP3 applicable CD changer malfunction
22: Er07	CD reading error.	• Defective CD (curved, broken or foreign material stuck/attached, etc.) • MP3 applicable CD changer malfunction
22: Er10	MP3 applicable CD changer does not operate.	• Malfunction of connectors between base unit and MP3 applicable CD changer • MP3 applicable CD changer malfunction
no Err	No DTCs stored	No DTCs stored

09–03D SYMPTOM TROUBLESHOOTING [CAR-NAVIGATION SYSTEM]

CAR-NAVIGATION SYSTEM 09–03D–1
Troubleshooting Index 09–03D–1
Quick diagnostic chart 09–03D–2
NO.1 DISPLAY SCREEN DOES NOT OPEN EVEN IF THE IGNITION SWITCH IS TURNED TO THE ACC POSITION. 09–03D–3
NO.2 DISPLAY SCREEN CHANGES TO BLACK. 09–03D–4
NO.3 DISPLAY SCREEN CHANGES TO WHITE. 09–03D–5
NO.4 SYSTEM DOES NOT LOAD THE MAP DISC. 09–03D–6
NO.5 VEHICLE POSITION DEVIATES FROM THE ROUTE MAP. 09–03D–6
NO.6 REMOTE CONTROL IS INOPERATIVE. 09–03D–8
NO.7 NO VOICE NAVIGATION. 09–03D–9
NO.8 DISPLAY SCREEN DOES NOT CHANGE TO THE NIGHT MODE. (FRONT AND REAR COMBINATION LIGHTS OPERATE NORMALLY.) 09–03D–10
REFERENCE INFORMATION 09–03D–11
Starting Procedure For Diagnostic Function. 09–03D–11
Finishing Procedure For Diagnostic Function. 09–03D–11

CAR-NAVIGATION SYSTEM

E6U090366000W01

Troubleshooting Index

- Use the chart below and verify the trouble in order to diagnose the appropriate area.

No.	Malfunction symptom
1	Display screen does not open even if the ignition switch is turned to the ACC position.
2	Display screen changes to black.
3	Display screen changes to white.
4	System does not load map disc.
5	Vehicle position deviates from the route map.
6	Car-navigation control switch is inoperative.
7	No voice navigation
8	Display screen does not change to the night mode. (Front and rear combination lights operate normally.)

Quick diagnostic chart

x: Applied

Troubleshooting item / Possible factor	1	2	3	4	5	6	7	8
	Display screen does not open even if the ignition switch is turned to the ACC position.	Display screen changes to black.	Display screen changes to white.	System does not load the map disc.	Vehicle position deviates from the route map.	Car-navigation control switch is inoperative.	No voice navigation.	Display screen does not change to the night mode.
Open or short circuit in power supply (B+) wiring harness, or burnt fuse	X							
Open or short circuit in power supply (ACC) wiring harness, or burnt fuse	X							
Open or short circuit in GND wiring harness	X							
LCD unit malfunction	X	X	X					X
Poor connection of LCD unit connector, terminal damage	X	X				X		X
Poor connection of car-navigation unit connector, terminal damage		X					X	
Car-navigation unit malfunction		X	X	X	X		X	X
Improper adjustment of screen contrast			X					
map disc malfunction				X				
Moisture inside of car-navigation unit				X				
Non-designated disc inserted				X				
Jammed radio signals from after market equipment					X			
Open or short circuit in vehicle speed signal wiring harness					X			
Poor connection of GPS antenna connector, terminal damage					X			
GPS antenna malfunction					X			
Car-navigation control switch malfunction						X		
Open or short circuit in remote control signal wiring harness						X		
Poor connection of car-navigation control switch connector, terminal damage						X		
Improper adjustment of NAVI voice volume							X	
Poor connection of driver-side front door speaker connector, terminal damage							X	
Driver-side front door speaker malfunction							X	
Open or short driver-side front door speaker wiring harness							X	
Improper setting of NAVI map indication								X
Open or short circuit in TNS signal wiring harness								X
Short circuit in car-navigation control signal wiring harness	X							
Open or short circuit in car-navigation unit (power supply (B+)) wiring harness		X						
Open or short circuit in car-navigation unit (power supply (ACC)) wiring harness		X						
Open or short circuit in car-navigation unit (GND) wiring harness		X						
Open or short circuit in wiring harness between LCD unit and car-navigation unit		X						
Open or short circuit in feeder line between antenna feeder and car-navigation unit					X			

E6U903BZW5S0

NO.1 DISPLAY SCREEN DOES NOT OPEN EVEN IF THE IGNITION SWITCH IS TURNED TO THE ACC POSITION.

E6U090366000W02

1	Display screen does not open even if the ignition switch is turned to the ACC position.
POSSIBLE CAUSE	• Open or short circuit in power supply (B+ or ACC) wiring harness or burnt fuse • Open or short circuit in GND wiring harness • LCD unit malfunction • Poor connection of LCD unit connector, terminal damage • Short circuit in car-navigation control signal wiring harness **Caution** • **Forcibly opening/closing, or placing an object on the display may cause the display screen to become inoperable.**

Diagnostic procedure

STEP	INSPECTION		ACTION
1	• Turn the ignition switch to the ACC position. • Press the OPEN/CLOSE button on the LCD unit. • Does the display screen open?	Yes	The system is normal. **Note** • If the display screen is closed by pressing the OPEN/CLOSE button of the LCD unit with the ignition switch at the ACC position, the display screen will remain closed when the ignition switch is turned to the ACC position again.
		No	Go to the next step.
2	• Turn the ignition switch to the LOCK position. • Inspect the following fuses: — RADIO 15 A fuse — ROOM 15 A fuse • Are the fuses damaged?	Yes	Go to the next step.
		No	• Replace with the appropriate standard fuse. — If the fuse is melted, inspect the wiring harness for short to ground. Repair or replace the wiring harness, then replace the fuse.
3	• Remove the cradle. • Disconnect the cradle connector (6-pin). • Turn the ignition switch to the ACC position. • Inspect the voltage between the cradle wiring harness-side connector (6-pin) terminal B (ACC) and G (GND). • Is the voltage B+?	Yes	Go to Step 5.
		No	Go to the next step.
4	• Turn the ignition switch to the LOCK position. • Inspect the continuity between terminal B (ACC) and G (GND) at the cradle wiring harness-side connector. • Is there continuity?	Yes	Repair or replace the suspect wiring harness. Replace the LCD unit. (ACC protector circuit inside LCD is broken.)
		No	• Go to the next step.
5	• Remove the LCD unit. (See 09–20–6 LCD UNIT REMOVAL/INSTALLATION.) • Inspect the connection of the LCD unit connector (24-pin). • Is the connector securely connected?	Yes	Go to the next step.
		No	Securely connect the LCD unit connector (24-pin).
6	• Disconnect the LCD unit connector (24-pin). • Inspect both LCD unit connector and wiring harness-side connector for poor connection (such as damaged/pulled-out pins, corrosion). • Are all the pins normal?	Yes	Go to the next step.
		No	**If the LCD unit connector is wrong:** Replace the LCD unit. (See 09–20–6 LCD UNIT REMOVAL/INSTALLATION.) **If the wiring harness-side connector is wrong:** Repair or replace the pins and/or the connector.
7	• Inspect the voltage between LCD unit wiring harness-side connector (24-pin) terminal Q (B+) and P (GND) • Is the voltage **B+**?	Yes	Go to the next step.
		No	Inspect the suspect wiring harness, then repair or replace the wiring harness.
8	• Turn the ignition switch to the ACC position. • Inspect the voltage between LCD unit wiring harness-side connector (24-pin) terminal O (ACC) and P (GND). • Is the voltage **B+**?	Yes	Replace the LCD unit. (See 09–20–6 LCD UNIT REMOVAL/INSTALLATION.)
		No	Inspect the suspect wiring harness, then repair or replace the wiring harness.

NO.2 DISPLAY SCREEN CHANGES TO BLACK.

E6U090366000W03

2	Display screen changes to black.
POSSIBLE CAUSE	• Open or short circuit in car-navigation unit (power supply (B+)) wiring harness • Open or short circuit in car-navigation unit (power supply (ACC)) wiring harness • Open or short circuit in car-navigation unit (GND) wiring harness • Open or short circuit in wiring harness between LCD unit and car-navigation unit • Poor connection of car-navigation unit connector, terminal damage • Poor connection of LCD unit connector, terminal damage • Car-navigation unit malfunction • LCD unit malfunction

Diagnostic procedure

STEP	INSPECTION		ACTION
1	• Turn the ignition switch to the ON position. • Does the display screen change from black to NAVI mode when pressing the joystick of the car-navigation control switch?	Yes	The system is normal. **Note** • If the "VOICE" button is pressed for **approx. 2 s or more**, the "DISP OFF" menu appears on the bottom-left side of screen. If "DISP OFF" mode is selected, the LCD unit will not display anything. "DISP OFF" mode is cancelled when the ignition switch is turned to the LOCK position or the joystick of the remote control is pressed.
		No	Go to the next step.
2	• Turn the ignition switch to the LOCK position. • Remove the car-navigation unit. (See 09–20–6 CAR-NAVIGATION UNIT REMOVAL/INSTALLATION.) • Inspect the car-navigation unit connector. (24-pin) • Is the connector securely connected?	Yes	Go to the next step.
		No	Securely connect the car-navigation unit connector (24-pin).
3	• Disconnect the car-navigation unit connector (24-pin). • Inspect both car-navigation unit connector and wiring harness-side connector for poor connection (such as damaged/pulled-out pins, corrosion). • Are all the pins normal?	Yes	Go to the next step.
		No	**If the car-navigation unit connector is wrong:** Replace the car-navigation unit. (See 09–20–6 CAR-NAVIGATION UNIT REMOVAL/INSTALLATION.) **If the wiring harness-side connector is wrong:** Repair or replace the pins and/or the connector.
4	• Inspect the voltage between the car-navigation unit wiring harness-side connector (16-pin) termnal B (B+) and A (GND). • Is the voltage B+?	Yes	Go to the next step.
		No	Inspect the suspect wiring harness, then repair or replace the wiring harness as necessary.
5	• Turn the ignition switch to the ACC position. • Inspect the voltage between the car-navigation unit wiring harness-side connector (16-pin) termnal D (ACC) and A (GND). • Is the voltage B+?	Yes	Go to the next step.
		No	Inspect the suspect wiring harness, then repair or replace the wiring harness as necessary.
6	• Turn the ignition switch to the LOCK position. • Remove the LCD unit. (See 09–20–6 LCD UNIT REMOVAL/INSTALLATION.) • Inspect the LCD unit connector (24-pin). • Is the LCD unit connector securely connected?	Yes	Go to the next step.
		No	Securely connect the LCD unit connector (24-pin).
7	• Disconnect the LCD unit connector (24-pin). • Inspect both LCD unit connector and wiring harness-side connector for poor connection (such as damaged/pulled-out pins, corrosion). • Are all the pins normal?	Yes	Go to the next step.
		No	**If the LCD unit connector is wrong:** Replace the LCD unit. (See 09–20–6 LCD UNIT REMOVAL/INSTALLATION.) **If the wiring harness-side connector is wrong:** Repair or replace the pins and/or the connector.

STEP	INSPECTION		ACTION
8	• Turn the ignition switch to the ACC position. • Inspect the continuity between the LCD unit wiring harness-side connector terminal and the car-navigation unit connector and wiring harness-side connector terminal. — A (24-pin, B)—T (24-pin, B) — B (24-pin, G)—V (24-pin, G) — C (24-pin, SYNC)—R (24-pin, SYNC) — D (24-pin, R)—X (24-pin, R) — E (24-pin, V.GND1)—U (24-pin, V.GND1) • Is there continuity?	Yes	Inspect for short circuit in the wiring harness. If there is a short circuit, repair or replace the suspect wiring harness. If the wiring harness is OK, then go to the next step.
		No	Repair or replace the suspect wiring harness.
9	• Inspect the continuity between the LCD unit wiring harness-side connector terminal and the car-navigation unit connector and wiring harness-side connector terminal. — I (24-pin, SI01)—N (24-pin, SI01) — K (24-pin, SI02)—P (24-pin, SI02) • Is there continuity?	Yes	Inspect for short circuit in the wiring harness. If there is a short circuit, repair or replace the suspect wiring harness. If the wiring harness is OK, then go to the next step.
		No	Repair or replace the suspect wiring harness.
10	• Dose system work properly?	Yes	Troubleshooting is completed.
		No	Replace the car-navigation unit. (See 09–20–6 CAR-NAVIGATION UNIT REMOVAL/INSTALLATION.)

NO.3 DISPLAY SCREEN CHANGES TO WHITE.

E6U090366000W04

3	Display screen changes to white.
POSSIBLE CAUSE	• Car-navigation unit malfunction • LCD unit malfunction • Improper adjustment of the screen contrast

09–03

Diagnostic procedure

TEP	INSPECTION		ACTION
1	• Turn the ignition switch to the ACC position. • Does the display screen change to "display quality adjustment" mode when pressing the MODE button for **approx. 2 s or more**?	Yes	Go to the next step.
		No	Replace the LCD unit. (See 09–20–6 LCD UNIT REMOVAL/INSTALLATION.)
2	• Does system work properly?	Yes	Troubleshooting is completed.
		No	Replace the LCD unit, then go to the next step. (See 09–20–6 LCD UNIT REMOVAL/INSTALLATION.)
3	• Select "default display" or "display quality adjustment" mode in the NAVI mode. • Press "ENTER" button. • Does system work properly?	Yes	Troubleshooting is completed.
		No	Replace the car-navigation unit. (See 09–20–6 CAR-NAVIGATION UNIT REMOVAL/INSTALLATION.)

NO.4 SYSTEM DOES NOT LOAD THE MAP DISC.

E6U090366000W05

4	System does not load the map disc.
POSSIBLE CAUSE	• Car-navigation unit malfunction • Map disc malfunction • Moisture inside of car-navigation unit • Non-designated disc is inserted **Note** • If dewdrops are formed inside of the car-navigation unit, the display screen shows the "The disc installed is not a map DVD" message. Remove the map disc, ventilate or remove moisture from the passenger compartment, and then leave it **for approx. 1 h**. The dewdrops will be removed and the car-navigation unit will operate normally. • In case of a dirty/damaged map disc or car-navigation unit malfunction, the display screen will show the "Please insert a map DVD" message for few seconds to 1 min, then change to "The disc installed is not a map DVD" message after the ignition switch is turned to the ACC position. • If a non-designated disc is inserted, the display screen shows the "The disc installed is not a map DVD" message.

Diagnostic procedure

STEP	INSPECTION		ACTION
1	• Eject the map disc. • Is the map disc a designated disc?	Yes	Go to the next step.
		No	Insert the designated disc, then go to the next step.
2	• Eject the map disc then insert it again. • Does system load the map disc?	Yes	Troubleshooting is completed.
		No	Go to the next step.
3	• Eject the map disc and clean the surface of map disc with a soft cloth. • Insert map disc again. • Does system load the map disc?	Yes	Troubleshooting is completed.
		No	Replace car-navigation unit and map disc at the same time. (consult distributor) (See 09–20–6 CAR-NAVIGATION UNIT REMOVAL/INSTALLATION.)

NO.5 VEHICLE POSITION DEVIATES FROM THE ROUTE MAP.

E6U090366000

5	Vehicle position deviates from the route map.
POSSIBLE CAUSE	• Jammed radio signals from after market equipment (radar, remote engine starter, anti-theft device etc.) • Open or short circuit in the wiring harness (vehicle speed signal related). • Car-navigation unit malfunction. • Poor connection of the GPS antenna connector, terminal damage • GPS antenna malfunction. • Open or short circuit in feeder line between antenna feeder and car-navigation unit.

Diagnostic procedure

STEP	INSPECTION		ACTION
1	• Is any of the following after-market equipment installed? — Radar — Remote engine starter — Anti-theft device. — Other	Yes	Go to the next step.
		No	Go to Step 3.
2	• Remove the after-market equipment. **Note** • The procedure requires an assistant. — Drive the vehicle without any obstacles. — Drive the vehicle indicator follow the steering wheel direction?.	Yes	System is normal. The after market electrical devices might be interrupting to the GPS reception.
		No	Go to the next step.
3	• Position the vehicle without any obstacles and receive GPS for **5 min.** at idle. • Does "GPS" show up on the left lower side of the display screen?	Yes	Go to the next step.
		No	Go to Step 8.

STEP	INSPECTION		ACTION
4	**Caution** • **This procedure requires an assistant.** • Diagnostic function is started. • Drive the vehicle. • Check the "Speed" on the diagnosis screen. • Does the "Speed" change according to the vehicle speed? **Note** • If the engine is started after diagnostic function is activated, the diagnostic function mode is reset.	Yes	Go to the next step.
		No	Go to Step 6.
5	**Caution** • **This procedure requires an assistant.** • Drive the vehicle and turn the steering wheel to the left and/or right. • Does the vehicle indicator follow the steering direction?	Yes	The system is normal. **Note** • The vehicle indicator might be out of position in the following areas: — Parallel road, high-level road, loop road, tower type parking lot
		No	Replace the car-navigation unit. (See 09–20–6 CAR-NAVIGATION UNIT REMOVAL/INSTALLATION.)
6	• Turn the ignition switch to the LOCK position. • Remove the car-navigation unit. (See 09–20–6 CAR-NAVIGATION UNIT REMOVAL/INSTALLATION.) • Inspect the connection of the car-navigation unit connector (16-pin). • Is the connector securely connected?	Yes	Go to the next step.
		No	Securely connect the car-navigation unit connector (16-pin).
7	• Disconnect the car-navigation unit connector (16-pin). • Inspect both car-navigation unit connector and wiring harness-side connector terminal H for poor connection (such as damaged/pulled-out pins, corrosion). • Are all the pins normal?	Yes	Inspect for vehicle speed signal input circuit. Repair or replace if necessary.
		No	**If the car-navigation unit connector is wrong:** Replace the car-navigation unit. (See 09–20–6 CAR-NAVIGATION UNIT REMOVAL/INSTALLATION.) **If the wiring harness-side connector is wrong:** Repair or replace the pins and/or the connector.
8	**Note** • If the engine is started after diagnostic function is activated, the diagnostic function mode is reset. • Turn the ignition switch to the ON position. • Diagnostic function is started. • Inspect the "GPS antenna" on the diagnosis screen. • Is the "OK" indicated?	Yes	Replace the car-navigation unit. (See 09–20–6 CAR-NAVIGATION UNIT REMOVAL/INSTALLATION.)
		No	Go to the next step.
9	• Turn the ignition switch to the LOCK position. • Remove the car-navigation unit. (See 09–20–6 CAR-NAVIGATION UNIT REMOVAL/INSTALLATION.) • Inspect the connection of the connector between the car-navigation unit and GPS antenna. • is the connector securely connected?	Yes	Go to the next step.
		No	Securely connect the GPS antenna connector (2-pin).
10	• Disconnect the GPS antenna connector. • Inspect both GPS antenna connector and car-navigation unit connector for poor connection (such as damaged/pulled-out pins, corrosion). • Are all the pins normal?	Yes	Go to the next step.
		No	**If the wiring harness-side connector is wrong:** Repair or replace the related wiring harness. **If the car-navigation unit side connector is wrong:** Replace the car-navigation unit. (See 09–20–6 CAR-NAVIGATION UNIT REMOVAL/INSTALLATION.)
11	• Inspect the continuity between the car-navigation unit wiring harness-side connector terminal and GPS antenna wiring harness-side connector terminal. • Is there continuity?	Yes	Inspect for short circuit in the wiring harness. If there is a short circuit, repair or replace the related wiring harness. If the wiring harness is OK, replace the car-navigation unit. (See 09–20–6 CAR-NAVIGATION UNIT REMOVAL/INSTALLATION.)
		No	Repair or replace the related wiring harness.

NO.6 REMOTE CONTROL IS INOPERATIVE.

E6U090366000W07

6	Remote control is inoperative.
POSSIBLE CAUSE	• Remote control malfunction • Open or short circuit in the wiring harness (remote control signal) • Poor connection of the cradle connector, terminal damage • Poor connection of the LCD unit connector, terminal damage • LCD unit malfunction **Note** • The remote control is inoperative if the following circuit is malfunctioning: — LCD unit connector (24-pin) terminal I (SI01) - Car-navigation unit connector (24-pin) terminal N (SI01) — LCD unit connector (24-pin) terminal K (SI02) - Car-navigation unit connector (24-pin) terminal P (SI02) • When the ignition switch is turned off, then ACC position, display screen changes to black.

Diagnostic procedure

STEP	INSPECTION		ACTION
1	• Are the switches only partly inoperative?	Yes	Replace the remote control.
		No	Go to the next step.
2	• Turn the ignition switch to the LOCK position. • Remove the cradle and inspect the connection of the cradle connector (6-pin). • Is the connector securely connected?	Yes	Go to the next step.
		No	Securely connect the cradle connector (6-pin).
3	• Turn the ignition switch to the LOCK position. • Disconnect the cradle connector (6-pin). • Inspect both the cradle and wiring harness-side connector for poor connection (such as damaged/pulled-out pins, corrosion). • Are all the pins normal?	Yes	Go to the next step.
		No	**If the cradle side connector is wrong:** Replace the cradle. (See 09–17–8 CONSOLE REMOVAL/INSTALLATION.) **If the wiring harness-side connector is wrong:** Repair or replace the pins and/or the connector.
4	• Remove the LCD unit. (See 09–20–6 LCD UNIT REMOVAL/INSTALLATION.) • Inspect the car-navigation unit connector (24-pin). • Is the connector securely connected?	Yes	Go to the next step.
		No	Securely connect the LCD unit connector.
5	• Disconnect the LCD unit connector (6-pin). • Inspect both the LCD unit and wiring harness-side connector for poor connection (such as damaged/pulled-out pins, corrosion). • Are all the pins normal?	Yes	Go to the next step.
		No	**If the LCD unit side connector is wrong:** Replace LCD unit. (See 09–20–6 LCD UNIT REMOVAL/INSTALLATION.) **If the wiring harness-side connector is wrong:** Repair or replace the pins and/or the connector.
6	• Turn the ignition switch to the LOCK position. • Disconnect the LCD unit connector (6-pin). • Disconnect the cradle connector (6-pin). • Inspect for continuity between cradle wiring harness-side connector terminal B and the LCD unit wiring harness-side connector terminal E. • Is there continuity?	Yes	Inspect for short sircuit in the wiring harness. If there is a short circuit, repair or replace the suspect wiring harnes. If the wiring harness is OK, go to the next step.
		No	Repair or replace the related wiring harness.
7	• Connect the LCD unit connector (6-pin). • Connect the cradle connector (6-pin). • Turn the ignition switch to the ON position. • Inspect the voltage at the cradle terminal B. • Is the voltage **B+**?	Yes	Replace the cradle. (See 09–17–8 CONSOLE REMOVAL/INSTALLATION.)
		No	Go to the next step.
8	• Turn the ignition switch to the LOCK position. • Disconnect the LCD unit connector (6-pin). • Turn the ignition switch to the ON position. • Inspect the voltage at terminal A (power). • Is the voltage **B+**?	Yes	Inspect the cradle wiring harness (power supply). Repair or replace if necessary.
		No	Replace the LCD unit. (See 09–20–6 LCD UNIT REMOVAL/INSTALLATION.)

NO.7 NO VOICE NAVIGATION

E6U090366000W08

7	No voice navigation
POSSIBLE CAUSE	• Improper adjustment of the NAVI voice volume • Car-navigation unit malfunction • Poor connection of the driver-side front door speaker connector, terminal damage • Driver-side front door speaker malfunction • Poor connection of the car-navigation unit connector, terminal damage • Open or short circuit in driver-side front door speaker wiring harness

Diagnostic procedure

STEP	INSPECTION		ACTION
1	• Is the voice navigation volume from "1" to "7"?	Yes	Go to the next step.
		No	Adjust the volume from "1" to "7".
2	• Turn the audio power switch (CD, MD, radio) to ON. • Does the driver-side front door speaker work?	Yes	Replace the car-navigation unit. (See 09–20–6 CAR-NAVIGATION UNIT REMOVAL/INSTALLATION.)
		No	Go to the next step.
3	• Turn the ignition switch to the LOCK position. • Remove the driver-side front door speaker. (See 09–20–9 FRONT DOOR SPEAKER REMOVAL/INSTALLATION.) • Inspect the connection of the driver-side front door speaker connector (2-pin). • Is the connector securely connected?	Yes	Go to the next step.
		No	**If poor connection of door-side front door speaker connector:** Securely connect the driver-side front door speaker connector.
4	• Disconnect the driver-side front door speaker connector (2-pin). • Inspect both the driver-side front door speaker and wiring harness-side connector for poor connection (such as damaged/pulled-out pins, corrosion). • Are all the pins normal?	Yes	Go to the next step.
		No	**If the driver-side front door speaker side connector is wrong:** Replace the driver-side front door speaker. (See 09–20–9 FRONT DOOR SPEAKER REMOVAL/INSTALLATION.) **If the wiring harness-side connector is wrong:** Repair or replace the pins and/or the connector.
5	• Remove the car-navigation unit. (See 09–20–6 CAR-NAVIGATION UNIT REMOVAL/INSTALLATION.) • Inspect the connection of the car-navigation unit connector (16-pin). • Is the connector securely connected?	Yes	Go to the next step.
		No	Securely connect the car-navigation unit connector.
6	• Disconnect the car-navigation unit connector (16-pin). • Inspect both the car-navigation unit and wiring harness-side connector terminal M and N for poor connection (such as damaged/pulled-out pins, corrosion). • Are all the pins normal?	Yes	Go to the next step.
		No	**If the car-navigation unit side connector is wrong:** Replace the car-navigation unit. (See 09–20–6 CAR-NAVIGATION UNIT REMOVAL/INSTALLATION.) **If the wiring harness-side connector is wrong:** Repair or replace the pins and/or the connector.
7	• Inspect for continuity between car-navigation unit and the driver-side front door speaker. • Is there continuity?	Yes	Inspect for short circuit in the wiring harness. If there is a short circuit, repair or replace the related wiring harness. If the wiring harness is ok, go to the next step.
		No	Repair or replace the wiring harness.
8	• Inspect the driver-side front door speaker. (See 09–20–9 FRONT DOOR SPEAKER INSPECTION • Is it normal?	Yes	Replace the car-navigation unit. (See 09–20–6 CAR-NAVIGATION UNIT REMOVAL/INSTALLATION.)
		No	Replace the driver-side front door speaker. (See 09–20–9 FRONT DOOR SPEAKER REMOVAL/INSTALLATION.)

NO.8 DISPLAY SCREEN DOES NOT CHANGE TO THE NIGHT MODE. (FRONT AND REAR COMBINATION LIGHTS OPERATE NORMALLY.)

E6U090366000W09

8	**Display screen does not change to the night mode. (Front and rear combination lights operate normally.)**
POSSIBLE CAUSE	• Improper setting of NAVI map indication • Open or short circuit in TNS signal wiring harness (TNS signal related) • LCD unit malfunction • Poor connection of the LCD unit connector, terminal damage • Car-navigation unit malfunction **Note** • The remote control is inoperative if the following circuit is malfunctioning: — LCD unit terminal I (SI01) - car-navigation unit terminal N (SI01) — LCD unit terminal K (SI02) - car-navigation unit terminal P (SI02) • When the ignition switch is turned off, then ACC position, display screen changes to black.

Diagnostic procedure

STEP	INSPECTION		ACTION
2	• Press the "MENU" button. • Select "Navigation Set Up". • Select "User Settings". • Inspect "Map Mode". • Is the "Map Mode" set to "Auto"?.	Yes	Go to the next step.
		No	The system is normal. Set the "Map Mode" to "Auto".
1	• Turn the ignition switch to the ON position. • Does the display screen change to the night mode when the light switch is turned to the TNS position, and the dimmer cancel switch is turned to OFF?	Yes	The system is normal.
		No	Go to the next step.
3	• Diagnostic function is started. • Turn the light switch to the TNS position. • Inspect the "TNS" on the diagnosis check screen. • Does the "TNS" indicate "ON"?	Yes	Replace the car-navigation unit. (See 09–20–6 CAR-NAVIGATION UNIT REMOVAL/INSTALLATION.)
		No	Go to the next step.
4	• Turn the ignition switch to the LOCK position. • Remove the LCD unit. (See 09–20–6 LCD UNIT REMOVAL/INSTALLATION.) • Inspect the connection of the LCD unit connector (24-pin). • Is the connector securely connected?	Yes	Go to the next step.
		No	Securely connect the LCD connector.
5	• Disconnect the LCD unit connector (24-pin). • Inspect both the LCD unit and wiring harness-side connector terminal V for poor connection (such as damaged/pulled-out pins, corrosion). • Are all the pins normal?	Yes	Go to the next step.
		No	**If the LCD unit side connector is wrong** Replace the LCD unit. (See 09–20–6 LCD UNIT REMOVAL/INSTALLATION.) **If the wiring harness-side connector is wrong** Repair or replace the pins and/or the connector.
6	• Inspect the voltage of the LCD unit wiring harness-side connector (24-pin) terminal V (TNS signal) • Is voltage **B+** when the light switch is turned to the TNS position?	Yes	Replace the LCD unit, then go to the next step. (See 09–20–6 LCD UNIT REMOVAL/INSTALLATION.)
		No	Inspect for TNS signal circuit. Repair or replace if necessary.
7	• Dose system operate properly?	Yes	Troubleshootig is completed.
		No	Replace the car-navigation unit. (See 09–20–6 CAR-NAVIGATION UNIT REMOVAL/ INSTALLATION.)

REFERENCE INFORMATION

E6U090366000W10

Starting Procedure For Diagnostic Function

1. Turn the ignition switch to the ACC or ON position.
2. Press the MENU button.
3. Select "Navigation Set Up".
4. Select "Calibration".
5. Select "Map Version".
6. Press the joystick up **two times**, then down **two times**.
7. "Diagnosis Check" is displayed on the screen.

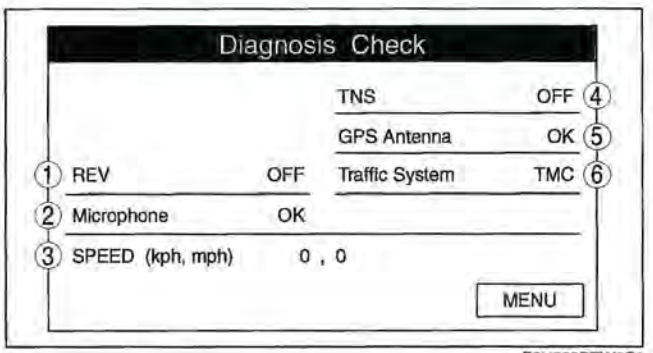

E6U903BZW5S1

No.	Display item	Description
1	REV	Indicate Reverse signal state. — ON: Reverse — OFF: Others
2	Microphone	Indicate the connection state of a microphone — OK: Connect — NCON: Disconnect
3	Speed*	Indicate the present vehicle speed by kph/mph (a maximum of 3 digits).
4	TNS*	Indicate the TNS signal state. — ON: Turn TNS on — OFF: Turn TNS off
5	GPS Antenna*	Indicate the connection state of a GPS antenna. — OK: Connect — NCON: Disconnect
6	Traffic System	Indicate the RDS-TMC system availability on the vehicle. — None: Not equip

* : It is used for symptom troubleshooting. (Troubleshooting index No. 5 and No. 8)

Finishing Procedure For Diagnostic Function

1. Turn the ignition switch to the LOCK position.
2. Turn the ignition switch to the ACC or ON position.
3. Return to the normal screen.

09–03E SYMPTOM TROUBLESHOOTING [IMMOBILIZER SYSTEM]

FOREWORD 09–03E–1
Troubleshooting Index 09–03E–1
NO.1 SECURITY LIGHT REMAINS ON OR DOES NOT ILLUMINATE..... 09–03E–2
Diagnostic Procedure 09–03E–2

FOREWORD

E6U090367000W01

Troubleshooting Index

- Use the chart below verify the symptoms of the trouble in order to diagnose the appropriate area.

No.	Troubleshooting item	Description	Page
1	Security light remains on or does not illuminate.	Malfunction in security light circuit.	(See 09–03E–2 NO.1 SECURITY LIGHT REMAINS ON OR DOES NOT ILLUMINATE)
2	Engine does not start. (When ignition switch is turned to ON position, security light illuminates for **approx. 3 seconds** and goes off.)	Malfunction in starter system circuit.	(See 01–03A–17 NO.3 WILL NOT CRANK [L3]) (See 01–03C–16 NO.3 WILL NOT CRANK [AJ])

NO.1 SECURITY LIGHT REMAINS ON OR DOES NOT ILLUMINATE

E6U090367000W02

1	Security light remains on or does not illuminate.
DETECTION CONDITION	Malfunction in security light circuit
POSSIBLE CAUSE	• PCM malfunction • Instrument cluster (print plate) malfunction • Open or short to power supply circuit in wiring harness between instrument cluster and PCM

Diagnostic Procedure

- When performing an asterisked (*) troubleshooting inspection, shake the wiring harness and connectors while doing the inspection to discover whether poor contact points are the cause of any intermittent malfunction. If there is a problem, check to make sure connectors, terminals and wiring harness are connected correctly and undamaged.

Step	Inspection		Action
1	**INSPECT OTHER WARNING AND INDICATOR LIGHTS CIRCUIT IN INSTRUMENT CLUSTER** • Turn ignition switch to ON position. • Do other warning and indicator lights illuminate?	Yes	Turn ignition switch to LOCK position, then go to next step.
		No	Inspect instrument cluster power supply system and ground system, then go to Step 4.
2	**INSPECT INSTRUMENT CLUSTER** • Turn ignition switch to LOCK position. • Disconnect negative battery cable. • Disconnect PCM connector. • Connect instrument cluster terminal 1G to ground using jumper wire. • Connect negative battery cable. • Turn ignition switch to ON position. • Does security light illuminate?	Yes	Go to next step.
		No	Replace instrument cluster, then go to Step 4. (See 09–22–3 INSTRUMENT CLUSTER REMOVAL/ INSTALLATION)
* 3	**INSPECT WIRING HARNESS BETWEEN INSTRUMENT CLUSTER AND PCM** • Turn ignition switch to LOCK position. • Disconnect negative battery cable. • Disconnect instrument cluster connector. • Inspect wiring harness between instrument cluster terminal 1G and PCM terminal 2W (L3) for following: — Short to ground — Short to power supply — Open circuit • Is wiring harness normal?	Yes	Replace PCM and reprogram immobilizer system, then go to next step. (See 01–40A–9 PCM REMOVAL/INSTALLATION [L3]) (See 09–14–39 IMMOBILIZER SYSTEM REPROGRAM PROCEDURE [WITH KEYLESS ENTRY SYSTEM])
		No	Replace wiring harness, then go to next step.
4	**CONFIRM THAT MALFUNCTION SYMPTOMS DO NOT RECUR AFTER REPAIR** • Turn ignition switch to LOCK position. • Disconnect negative battery cable. • Connect instrument cluster connector. • Connect PCM connector. • Connect negative battery cable. • Turn ignition switch to ON position. • Does security light operate properly?	Yes	Complete troubleshooting, then explain repairs to customer.
		No	Recheck malfunction symptoms, then repeat from Step 1 if malfunction recurs.

09–03F SYMPTOM TROUBLESHOOTING [ADVANCED KEYLESS SYSTEM]

-YLESS ENTRY SYSTEM WIRING DIAGRAM [ADVANCED KEYLESS SYSTEM] 09–03F–2
FOREWARD [ADVANCED KEYLESS SYSTEM] 09–03F–3
SYMPTOM TROUBLESHOOTING CHART [ADVANCED KEYLESS SYSTEM] 09–03F–3
NO.1 DOOR CANNOT BE LOCKED/UNLOCKED BY TRANSMITTER (CARD KEY) 09–03F–3
NO.2 BLINK KEYLESS INDICATOR LIGHT 09–03F–5
NO.3 ADVANCED KEYLESS ENTRY FUNCTION INOPERATIVE 09–03F–6
NO.4 ADVANCED KEYLESS START FUNCTION INOPERATIVE 09–03F–7

KEYLESS ENTRY SYSTEM WIRING DIAGRAM [ADVANCED KEYLESS SYSTEM]

E6U090369000W07

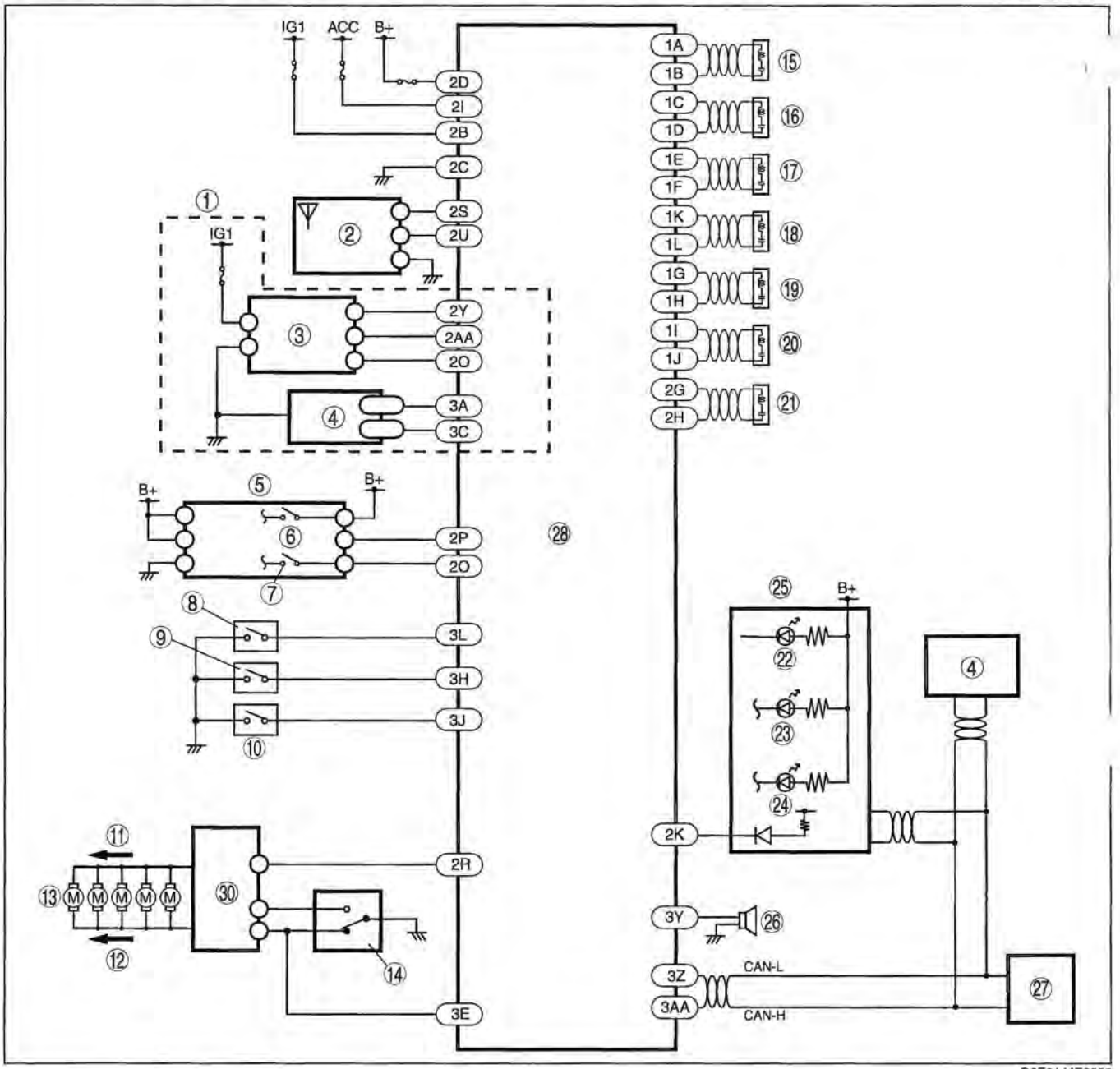

D6E914AT3002

1	With immobilizer system
2	Keyless receiver
3	Coil
4	PCM
5	Steering lock unit
6	Push switch
7	Key reminder switch
8	Request switch (liftgate)
9	Request switch (driver side)
10	Request switch (passenger side)
11	LOCK
12	UNLOCK
13	Door lock actuator
14	BCM

15	Keyless antenna (driver side)
16	Keyless antenna (passenger side)
17	Keyless antenna (exterior, rear)
18	Keyless antenna (interior, middle)
19	• Keyless antenna (interior, rear) (4SD) • Keyless antenna (interior, RR) (5HB, WGN)
20	Keyless antenna (interior, LR) (5HB, WGN)
21	Keyless antenna (interior, front)
22	Security light
23	Keyless indicator light (green)
24	Keyless warning light (red)
25	Instrument cluster
26	Keyless buzzer
27	DLC-2
28	Keyless control module

FOREWARD [ADVANCED KEYLESS SYSTEM]

E6U090369000W08

- The advanced keyless system is controlled by the keyless control module.
- "All locks" includes the liftgate.

SYMPTOM TROUBLESHOOTING CHART [ADVANCED KEYLESS SYSTEM]

E6U090369000W09

No.	Troubleshooting item	Page
1	Door cannot be locked/unlocked by transmitter (card key)	See 09–03F–3 NO.1 DOOR CANNOT BE LOCKED/UNLOCKED BY TRANSMITTER (CARD KEY)
2	Blink keyless indicator light	See 09–03F–5 NO.2 BLINK KEYLESS INDICATOR LIGHT
3	Advanced keyless entry function inoperative	See 09–03F–6 NO.3 ADVANCED KEYLESS ENTRY FUNCTION INOPERATIVE
4	Advanced keyless start function inoperative	See 09–03F–7 NO.4 ADVANCED KEYLESS START FUNCTION INOPERATIVE

NO.1 DOOR CANNOT BE LOCKED/UNLOCKED BY TRANSMITTER (CARD KEY)

E6U090369000W10

1	Door cannot be locked/unlocked by transmitter
POSSIBLE CAUSE	• Malfunction in transmitter (card key) battery or transmitter (card key) • Malfunction in keyless control module • Malfunction in keyless receiver • Malfunction in BCM • Wrong usage • The after-market electrical parts are interfering with the keyless entry system

KEYLESS RECEIVER
WIRING HARNESS-SIDE CONNECTOR

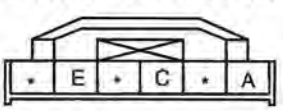

KEYLESS CONTROL MODULE
WIRING HARNESS-SIDE CONNECTOR

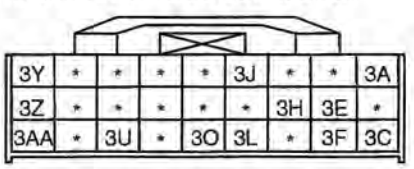

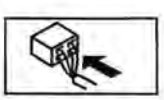

09–03F

Diagnostic procedure

STEP	INSPECTION		ACTION
1	• Attempt to lock/unlock the door with the transmitter (card key). • Does door lock system work?	Yes	Go to the next step.
		No	Go to Step 7.
2	• Did the customer activate the keyless entry system within operative area **(2.5 m {8.2 ft}** from vehicle)?	Yes	Go to the next step.
		No	The system is normal. Explain to the customer that the system does not work without the system operative area.
3	• Did the customer use the keyless entry system in particular area, such as being near TV towers, power plants, power lines, or factories?	Yes	The system is normal. Area of operation is subject. Explain effect of outside interference on the transmitter (card key) to the customer.
		No	Go to the next step.
4	• Did the customer activate the keyless entry system with the key inserted into the steering lock?	Yes	The system is normal. Explain to the customer that the system does not work with the key inserted into the steering lock.
		No	Go to the next step.
5	• Are any of the following after-market electrical parts on the vehicle? — Cellular phone — Radio-wave equipment — Remote engine starter — TV — Other	Yes	Go to the next step.
		No	Go to Step 7.

STEP	INSPECTION		ACTION
6	• Disconnect the after-market electrical parts connectors and attempt to lock/unlock the doors with the transmitter (card key). • Does the keyless entry system work?	Yes	The system is normal. The after-market electrical parts are interfering with the keyless entry system.
		No	Go to the next step.
7	• Attempt to lock/unlock the doors with the transmitter (card key). • Does the door lock system work?	Yes	Go to the next step.
		No	Go to Step 9.
8	• Replace with a transmitter (card key) battery known to be good. • Does the keyless entry system operate properly?	Yes	Replace the transmitter (card key) battery, and then go to Step 24.
		No	Go to the next step.
9	• Visually inspect the transmitter (card key) battery. • Are the below items correct? — Transmitter (card key) battery installation (correct polarity) — Battery type (**CR2025**)	Yes	Go to the next step.
		No	Install the transmitter (card key) battery properly or replace with the specified transmitter (card key) battery (**CR2025**), then go to Step 24.
10	• Visually inspect the transmitter (card key). — Is there rust on the transmitter (card key) battery terminals (positive or negative)? — Is there poor connection between the terminals and battery?	Yes	Replace the transmitter (card key) or repair the transmitter (card key) battery terminal, then go to Step 24.
		No	Go to the next step.
11	• Inspect transmitter (card key) battery. • Is the battery voltage normal?	Yes	Go to Step 13.
		No	Go to the next step.
12	• Replace with a transmitter (card key) battery known to be good. • Does the keyless entry system operate properly?	Yes	Replace the transmitter (card key) battery, and then go to Step 24.
		No	Replace the transmitter (card key), and then go to Step 24.
13	• Inspect for the keyless receiver installation. • Is the bracket securely installed on the keyless receiver?	Yes	Go to the next step.
		No	Install the bracket securely, and then go to the next step.
14	• Inspect the ground wire on the keyless receiver bracket. • Is the ground wire tighten on the bracket?	Yes	Go to the next step.
		No	Tighten the ground wire, then go to the next step.
15	• Turn the ignition switch to the LOCK position. • Measure the voltage at keyless receiver terminal A? • Is the voltage **B+**?	Yes	Go to the next step.
		No	• Inspect ROOM 15 A fuse.. • Inspect and repair the wiring harness between the fuse block and the keyless receiver as necessary.
16	• Measure the voltage at keyless receiver terminal E? • Is the voltage **0 V**?	Yes	Go to the next step.
		No	• Inspect and repair the wiring harness between the ground wire and the keyless receiver as necessary. • Re-tighten the ground wire as necessary.
17	• Disconnect the keyless receiver connector (6-pin) and keyless control module connector (75-pin). • Is there continuity between the following terminals? — Keyless receiver connector terminal A— keyless control module connector terminal 2S	Yes	Go to the next step.
		No	• Inspect and repair the wiring harness between the keyless control module and the keyless receiver, then go to the next step.
18	• Remove the key from steering lock. • Measure the voltage at the keyless control module terminal 2U while operating the transmitter (card key)? • Is the voltage as below — **5 V→1.0** ς **o**ρ λεσσ	Yes	Go to the next step.
		No	Replace the keyless receiver, and then go to the next step.
19	• Measure the voltage at the keyless contorl module terminals 2B, 2D and 2I. — Terminal 2B: **IG1 voltage** — Terminal 2D: **B+** — Terminal 2B: **ACC voltage** • Is the voltage as above?	Yes	Go to the next step.
		No	• Inspect for fuse. • Inspect and repair the wiring harness between the keyless control module and the fuse block as necessa

STEP	INSPECTION		ACTION
20	• Measure the voltage at keyless control module terminal 2C? • Is the voltage **0 V**?	Yes	Go to the next step.
		No	• Inspect and repair the wiring harness between the ground wire and the keyless control module as necessary. • Re-tighten the ground wire as necessary.
21	• Measure the voltage at the keyless contorl module terminals 2O. — Insert the key into the steering lock: **B+** — Remove the key from steering lock: **1.0 V or less** • Is the voltage as above?	Yes	Go to the next step.
		No	• Inspect for key reminder switch. • Inspect and repair the wiring harness between the steering lock unit (key reminder switch) and the keyless control module.
22	• Measure the voltage at the keyless contorl module terminals 2R while operating the transmitter. — All doors locked: **1.0 V or less→B+→**1.0 V or less — Any door unlocked: **1.0 V or less→**B+→1.0 V or less • Is the voltage as above?	Yes	Replace the keyless control module.
		No	• Inspect and repair the wiring harness between the keyless control module (2R) and BCM (7I). — If the harness is normal, go to the next step. — If the harness is malfunctioning, repair the wiring harness.
23	• Measure the voltage at the BCM terminals 6A, 6B and 6F while operating the transmitter. — Lock all doors with the transmitter (card key): **1.0 V or less→B+→**1.0 V or less • (normal lock: 6A terminal) • (double lock: 6F terminal) — Unlock any door with the transmitter (card key): **1.0 V or less→**B+→1.0 V or less (6B terminal) • Is the voltage as above?	Yes	• Inspect and repair the wiring harness between the BCM and the door lock actuator. • Inspect for door lock actuator.
		No	Replace the BCM.
24	• Does the keyless entry system operate properly?	Yes	Troubleshooting completed. Explain repairs to the customers
		No	Re-inspect the malfunction symptoms, then repeat form Step 1 if malfunction recurs.

NO.2 BLINK KEYLESS INDICATOR LIGHT

E6U090369000W11

2	Blink keyless indicator light
POSSIBLE CAUSE	• Low transmitter (card key) battery voltage.

Diagnostic procedure

STEP	ACTION
1	• Replace wit new transmitter (card key) battery.

NO.3 ADVANCED KEYLESS ENTRY FUNCTION INOPERATIVE

E6U090369000W12

3	Advanced keyless entry function inoperative
POSSIBLE CAUSE	• Malfunction in the transmitter (card key). • Malfunction in the keyless control module. • Malfunction in the keyless receiver. • Malfunction in the keyless antenna. • Malfunction in the BCM. • Wrong usage.

KEYLESS CONTROL MODULE WIRING HARNESS SIDE CONNECTOR

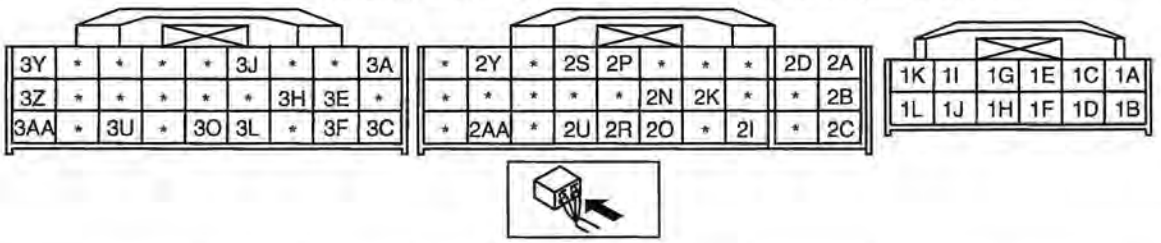

Diagnostic procedure

STEP	INSPECTION		ACTION
1	• Retrieve the advanced keyless system DTC using the WDS or equivalent. • Are there DTC displayed?	Yes	Perform the applicable DTC diagnostic procedures.
		No	Go to the next step.
2	• Did the customer attempt to operate each front doors and liftgate using the request switch?	Yes	Go to the next step.
		No	Inspect the advanced keyless system operations using the request switch. If the advanced keyless system is inoperative, then go to the next step.
3	• Prepare the follwings: — Make sure that there is no transmitter (card key) inside the passenger compartment. — Close all doors including liftgate. — Remove the key from the steering lock. — Make sure that start knob is to the LOCK position. (Do not Press the knob) — Make sure that the transmitter (card key) is within the advanced keyless system operative area (**within 80 cm {2.6 ft}** from front door) • Does the advanced keyless system operate properly?	Yes	The system is normal. Explain the advanced keyless system operation.
		No	Go to the next step.
4	• Replace with a transmitter (card key) battery known to be good. • Operate the transmitter (card key). • Does the keyless entry system operate properly?	Yes	Replace the transmitter (card key). Then go to the next step.
		No	Go to the next step.
5	• Measure the voltage at the keyless control module terminals 3H, 3J and 3L while operating the request switch. — Operate driver's side front door request switch (4H): **5.0 V→1.0 V or less** — Operate passenger's side front door request switch (4J): **5.0 V→1.0 V or less** — Operate liftgate request switch (4L): **5.0 V→1.0 V or less** • Is the voltage as above?	Yes	Go to the next step.
		No	Inspect and repair the applicable wiring harness as necessary, then go to the next step.

STEP	INSPECTION		ACTION
6	• Measure the voltage at the following keyless control module terminal while operating the request switch. — Terminal 1A and 1B for driver's side keyless antenna — Terminal 1C and 1D for passengerr's side keyless antenna — Terminal 1E and 1F for exterior, rear keyless antenna — Terminal 1G and 1H for interior, rear (4SD)/interior, RR (5HB, WGN) keyless antenna — Terminal 1I and 1J for interior, RL keyless antenna (5HB, WGN) — Terminal 1K and 1L for interior, middle keyless antenna — Terminal 2G and 25H for interior, front keyless antenna • Is the voltage **within 4.0—6.0 V**?	Yes	Go to the next step.
		No	Inspect and repair the applicable wiring harness between the keyless antenna and the keyless control module, then go to the next step.
7	• Measure the voltage at the keyless control module terminals 2U (keyless receiver) while operating the any request switch. — **5.0 V**→1.0 V or less • Is the voltage as above?	Yes	Go to the next step.
		No	• Inspect the wiring harness between the keyless receiver and the keyless control module. — If the harness is normal, replace the keyless receiver. — If the harness is malfunctioning, repair the wiring harness. • Go to the next step.
8	• Measure the voltage at the keyless control module terminals 2R (BCM) while operating the request switch. — Unlock: **1.0 V or less**→**B+**←1.0 V or less • Is the voltage as above?	Yes	Inspect and repair the wiring harness between the BCM and the keyless control module, then go to the next step.
		No	Inspect the keyless control module. If the keyless control module is malfunctioning, replace the module.
9	• Does the keyless entry system operate properly?	Yes	Troubleshooting completed. Explain repairs to the customers
		No	Re-inspect the malfunction symptoms, then repeat form Step 1 if malfunction recurs.

09-03

NO.4 ADVANCED KEYLESS START FUNCTION INOPERATIVE

E6U090369000W13

4	**Advanced keyless start function inoperative**
POSSIBLE CAUSE	• Malfunction in the transmitter (card key). • Malfunction in the keyless control module. • Malfunction in the keyless receiver. • Malfunction in the keyless antenna. • Malfunction in the PCM.

KEYLESS CONTROL MODULE WIRING HARNESS SIDE CONNECTOR

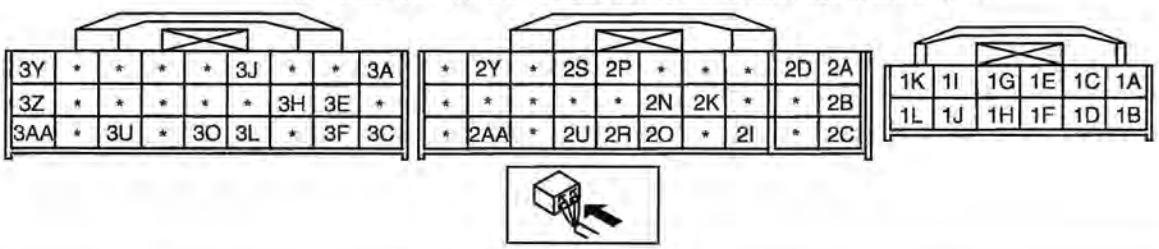

Diagnostic procedure

STEP	INSPECTION		ACTION
1	• Retrieve the advanced keyless system DTC using the WDS or equivalent. • Are there DTC displayed?	Yes	Perform the applicable DTC diagnostic procedures.
		No	Go to the next step.
2	• Attempt to start the engine using the key. • Does engine start?	Yes	Go to the next step.
		No	Go to symptom torubleshooting flow No.3 in 01-03 section.
3	• Bring the transmitter (card key) inside the passenger compartment. • Measure the voltage at the keyless control module terminal 2N (push switch) while pushing the start knob. • Is the voltage **0 V**?	Yes	Go to the next step.
		No	• Inspect the wiring harness between the steering lock unit and keyless control. — If the harness is normal, replace the steering lock unit. — If the harness is malfunctioning, repair the wiring harness. • Go to the next step.
4	• Replace with a transmitter (card key) battery known to be good. • Bring the transmitter (card key) inside the passenger compartment. • Does the keyless entry system operate properly?	Yes	Replace the transmitter (card key). Then go to the next step.
		No	Go to the next step.
5	• Measure the voltage at the following keyless control module terminal while pressing the start knob. — Terminal 1A and 1B for driver's side keyless antenna — Terminal 1C and 1D for passengerr's side keyless antenna — Terminal 1E and 1F for exterior, rear keyless antenna — Terminal 1G and 1H for interior, rear (4SD)/interior, RR (5HB, WGN) keyless antenna — Terminal 1I and 1J for interior, RL keyless antenna (5HB, WGN) — Terminal 1K and 1L for interior, middle keyless antenna — Terminal 2G and 25H for interior, front keyless antenna • Is the voltage **within 4.0—6.0 V**?	Yes	Go to Step 7.
		No	Inspect and repair the applicable wiring harness between the keyless antenna and the keyless control module, then go to the next step.
7	• Measure the voltage at the keyless control module terminals 2U (keyless receiver) while pressing the start knob. — **5.0 V**→1.0 V or less • Is the voltage as above?	Yes	Go to the next step.
		No	• Inspect the wiring harness between the keyless receiver and the keyless control module. — If the harness is normal, replace the keyless receiver. — If the harness is malfunctioning, repair the wiring harness. • Go to the next step.
8	• Does the keyless indicator light turn ON when pressing the start knob?	Yes	Go to Step 10.
		No	Go to the next step.
9	• Measure the voltage at the keyless control module terminals 2P while pressing the start knob. — **5.0 V**→1.0 V or less • Is the voltage as above?	Yes	Go to the next step.
		No	• Inspect the wiring harness between the steering lock unit and the keyless control module. — If the harness is normal, replace the keyless control module. — If the harness is malfunctioning, repair the wiring harness. • Go to the next step.
10	• Does the keyless entry system operate properly?	Yes	Troubleshooting completed. Explain repairs to the customers
		No	Re-inspect the malfunction symptoms, then repeat form Step 1 if malfunction recurs.

09–03G SYMPTOM TROUBLESHOOTING [KEYLESS ENTRY SYSTEM]

KEYLESS ENTRY SYSTEM WIRING DIAGRAM 09–03G–1
FOREWARD [KEYLESS ENTRY SYSTEM] 09–03G–2
SYMPTOM TROUBLESHOOTING CHART [KEYLESS ENTRY SYSTEM] 09–03G–2
NO.1 ONE OR MORE ON-BOARD DIAGNOSTIC FUNCTIONS INOPERATIVE [KEYLESS ENTRY SYSTEM] 09–03G–2
NO.2 ALL ON-BOARD DIAGNOSTIC FUNCTIONS INOPERATIVE 09–03G–4
NO.3 TRANSMITTER ID CODE CANNOT BE REPROGRAMMED [KEYLESS ENTRY SYSTEM] 09–03G–6

KEYLESS ENTRY SYSTEM WIRING DIAGRAM

E6U090369000W01

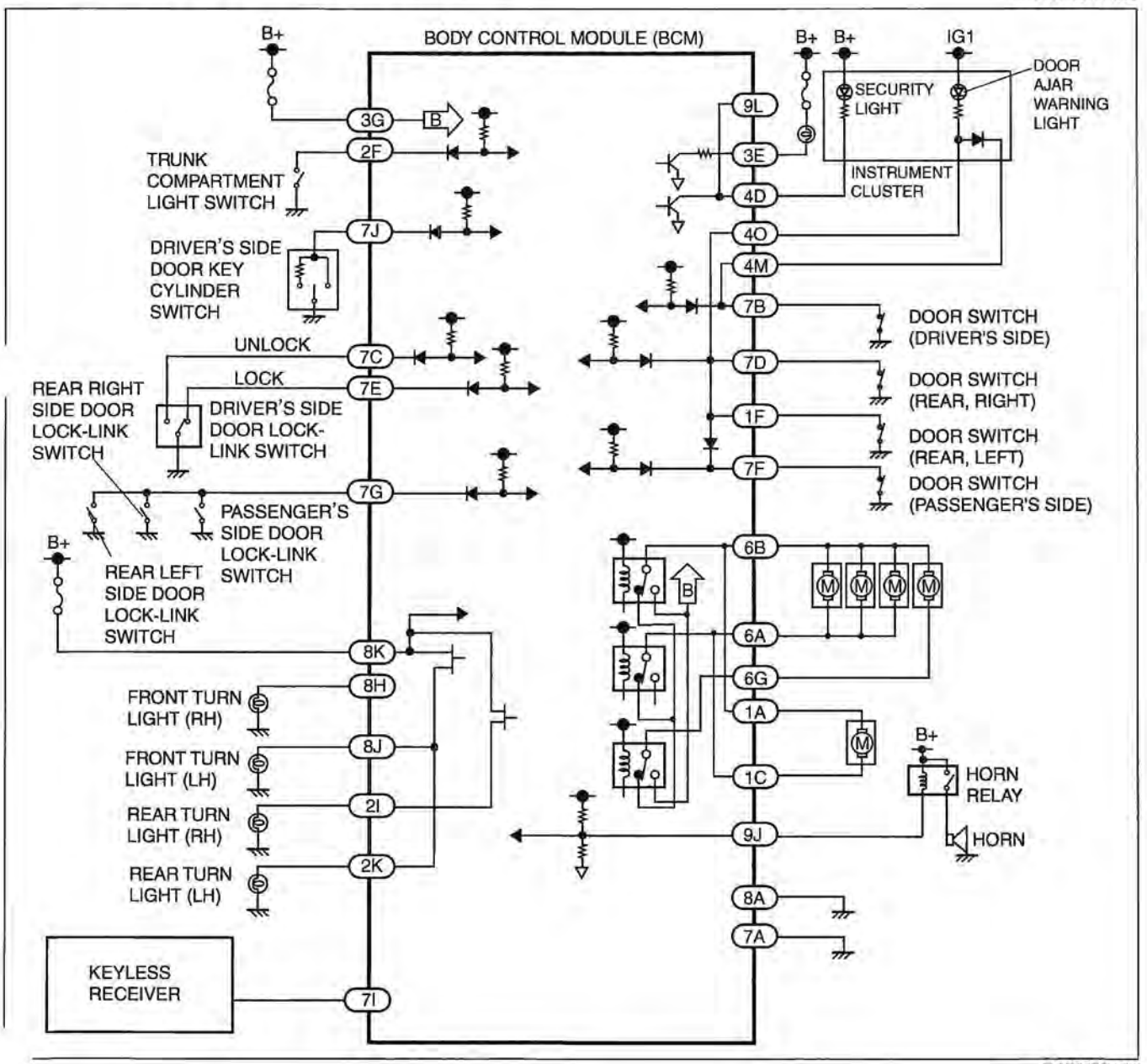

E6U914BS1002

FOREWARD [KEYLESS ENTRY SYSTEM]

E6U090369000W02

- The keyless entry system is controlled by the BCM.
- "All locks" includes the trunk lid/liftgate.

SYMPTOM TROUBLESHOOTING CHART [KEYLESS ENTRY SYSTEM]

E6U090369000W03

No.	Troubleshooting item	Description	Page
1	One or more on-board diagnostic functions inoperative	• Malfunction in door lock linkage system	See 09–03G–2 NO.1 ONE OR MORE ON-BOARD DIAGNOSTIC FUNCTIONS INOPERATIVE [KEYLESS ENTRY SYSTEM]
2	All on-board diagnostic functions inoperative	• Malfunction in BCM power supply circuit, door latch switch circuit, BCM ground circuit, or keyless receiver.	See 09–03G–4 NO.2 ALL ON-BOARD DIAGNOSTIC FUNCTIONS INOPERATIVE
3	Transmitter ID code cannot be reprogrammed	• Malfunction in transmitter battery, transmitter, keyless receive bracket, keyless receive bracket ground screw, or BCM circuit. keyless receive circuit.	See 09–03G–6 NO.3 TRANSMITTER ID CODE CANNOT BE REPROGRAMMED [KEYLESS ENTRY SYSTEM]

NO.1 ONE OR MORE ON-BOARD DIAGNOSTIC FUNCTIONS INOPERATIVE [KEYLESS ENTRY SYSTEM]

E6U090369000W04

- When performing an asterisked (*) troubleshooting inspection, slightly shake the wiring harness and connectors while performing the inspection to discover whether poor contact points are the cause of any intermittent malfunctions. If there is a problem, verify that the connectors, terminals and wiring harnesses are connected correctly and undamaged.

1	One or more on-board diagnostic functions inoperative
DESCRIPTION	• Malfunction in door lock linkage system
POSSIBLE CAUSE	• Malfunction in door lock linkage • Malfunction in BCM door lock/unlock signal circuit — BCM malfunction

BODY CONTROL MODULE (BCM) WIRING HARNESS SIDE CONNECTOR

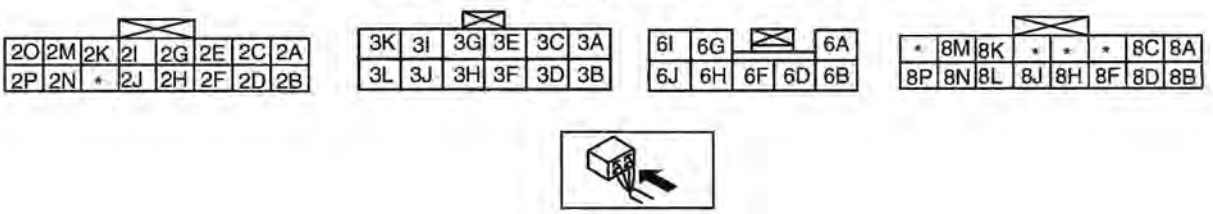

Diagnostic procedure

STEP	INSPECTION		ACTION
1	**CHECK HORN, AND HAZARD WARNING LIGHT OPERATION DURING ON-BOARD DIAGNOSIS** • Did all of the following items work during on-board diagnostic function operation? — Hazard warning lights flashed	Yes	Go to Step 5.
		No	Go to next step.
2	**INSPECT HAZARD WARNING LIGHT OPERATION DURING ON-BOARD DIAGNOSIS** • Did hazard warning lights flash during on-board diagnostic function operation?	Yes	Go to Step 5.
		No	Go to next step.
3	**INSPECT HAZARD WARNING LIGHT CIRCUIT** • Do hazard warning lights flash when hazard warning switch is on?	Yes	Go to next step.
		No	Inspect hazard warning light circuit.
*4	**INSPECT IF MALFUNCTION IS IN WIRING HARNESS (BETWEEN BCM AND TURN LIGHTS) OR BCM** • Measure the voltage at BCM terminals 3B and 3D (12-pin connector), and 2I and 2K (16-pin connector), and 8H and 8J (16-pin connector) during on-board diagnostic function operation. — When hazard warning light flashed: **Alternates between B+ and below 1.0 V** • Are the voltage as above?	Yes	Recheck malfunction symptoms, then repeat from Step 1 if malfunction reoccurs.
		No	• Inspect wiring harness between BCM and turn lights. — If wiring harness is normal, replace the BCM, then go to Step 8. — If wiring harness malfunction, repair wiring harness, then go to Step 8.
5	**VERIFY THAT ALL DOORS LOCK AND UNLOCK DURING ON-BOARD DIAGNOSIS** • Do all doors unlock and lock during on-board diagnostic function operation?	Yes	Reinspect the malfunction symptoms, then repeat from Step 1 if the malfunction recurs.
		No	Go to the next step.
6	**INSPECT DOOR LOCK LINKAGE** • Operate the door lock knob and verify the door locks and unlocks manually. • Does every door lock system work?	Yes	Go to the next step.
		No	Inspect the door lock linkage.
*7	**INSPECT IF MALFUNCTION IS IN DOOR LOCK ACTUATOR, BCM GROUND CIRCUIT OR ELSEWHERE** • Measure the voltage at BCM terminals 6A, 6B and 6F. — All doors locked: **1.0 V or less → B+ → 1.0 V or less** (Normal lock: 6A terminal) (Double lock: 6G terminal) — Driver-side door unlocked: **1.0 V or less → B+ → 1.0 V or less** (Normal unlock: 6B terminal) • Is the voltage as above?	Yes	Reinspect the malfunction symptoms, then repeat from Step 1 if the malfunction recurs.
		No	• Inspect the BCM connector. • Inspect the wiring harness between the BCM and door lock actuator. — If the above parts are normal, go to the next step. — If any of above parts are malfunctioning, repair the malfunctioning part.
8	**REINSPECT MALFUNCTION SYMPTOM AFTER REPAIR** • Does the keyless entry system operate properly?	Yes	• Troubleshooting completed. • Explain repairs to the customer.
		No	Reinspect the malfunction symptoms, then repeat from Step 1 if malfunction recurs.

NO.2 ALL ON-BOARD DIAGNOSTIC FUNCTIONS INOPERATIVE

E8U090369000W05

- When performing an asterisked (*) troubleshooting inspection, slightly shake the wiring harness and connectors while performing the inspection to discover whether poor contact points are the cause of any intermittent malfunctions. If there is a problem, verify that the connectors, terminals and wiring harnesses ar connected correctly and undamaged.

2	All on-board diagnostic functions inoperative
DESCRIPTION	• Malfunction in BCM power supply circuit, door latch switch circuit, BCM ground circuit, or keyless receiver.
POSSIBLE CAUSE	• Malfunction in IG1 or power supply signal circuit of BCM — BCM power supply fuse malfunction — Malfunction in wiring harness between BCM power supply fuses and BCM • Malfunction in door open/closed signal circuit of BCM — Door latch switch system malfunction — BCM malfunction — Malfunction in wiring harness between BCM and door latch switch • Malfunction in BCM GND signal circuit — Malfunction in wiring harness between BCM and ground • Malfunction in keyless receiver — Keyless receiver malfunction — Malfunction in wiring harness between keyless receiver and BCM

BODY CONTROL MODULE (BCM) WIRING HARNESS SIDE CONNECTOR

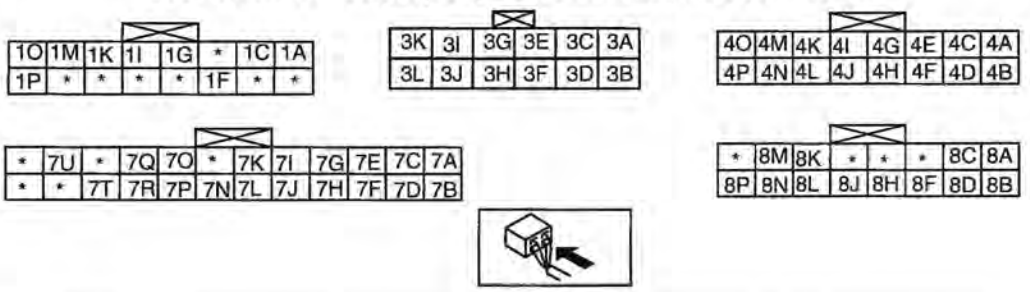

Diagnostic procedure

STEP	INSPECTION		ACTION
1	**INSPECT BCM POWER SUPPLY FUSES** • Are the BCM power supply fuses normal?	Yes	Go to the next step.
		No	Install an appropriate amperage fuse.
2	**INSPECT DOOR LATCH SWITCH INSTALLATION** • Are the door latch switches installed securely?	Yes	Go to the next step.
		No	Install the door latch switches securely, then go back to Step 5 of KEYLESS ENTRY SYSTEM PRELIMINARY INSPECTION.
*3	**INSPECT IF MALFUNCTION IS IN WIRING HARNESS (NO CONTINUITY BETWEEN FUSE BLOCK AND BCM) OR ELSEWHERE** • Turn the ignition switch to the ON position. • Measure the voltage at the following BCM terminals: — IG1 signal (terminal 4O, 3I, 7U) — Power supply signal (terminal 3J, 3G, 3E, 4D, 4P, 8K) • Is the voltage **B+**?	Yes	Go to the next step.
		No	Repair the wiring harness between the fuse block and BCM, then go to Step 13.
*4	**INSPECT IF MALFUNCTION IS IN WIRING HARNESS (SHORT TO POWER SUPPLY BETWEEN FUSE BLOCK AND BCM, OR BETWEEN BCM AND GROUND) OR ELSEWHERE** • Turn the ignition switch to the LOCK position. • Disconnect the BCM connector. • Measure the voltage at the following BCM terminal (wiring harness-side): — IG1 signal (terminal 4O, 3I, 7U) • Is the voltage **B+**?	Yes	Repair the malfunctioning wiring harness, then go to Step 13.
		No	Go to the next step.

STEP	INSPECTION		ACTION
*5	**INSPECT IF MALFUNCTION IS IN WIRING HARNESS (NO CONTINUITY BETWEEN BCM AND GROUND) OR ELSEWHERE** • Is there continuity between BCM terminal 7A, 8A and ground?	Yes	Go to the next step.
		No	Repair the wiring harness between the BCM and ground, then go to Step 13.
6	**INSPECT FOR CHECK CODE 04 IN INSTRUMENT CLUSTER** • Inspect the door latch switch using the instrument cluster input/output check mode. (See 09–22–7 INSTRUMENT CLUSTER INPUT/OUTPUT CHECK MODE.) • Is DTC 04 displayed?	Yes	Go to the next step.
		No	Repair the door latch switch system using the DTC 04 inspection procedure, then go to Step 13.
7	**INSPECT BCM OR WIRING HARNESS (BETWEEN BCM AND DOOR LATCH SWITCHES FOR CONTINUITY)** • Open all doors. • Is there continuity between BCM terminals 1F, 7B, 7D, 7F and ground?	Yes	Replace the BCM and reprogram the transmitter ID code, then go to the next step.
		No	Repair the wiring harness between the BCM and door latch switches, then go to the next step.
8	**INSPECT POWER SUPPLY FUSE** • Is the keyless receiver power supply fuse normal?	Yes	Go to the next step.
		No	Install an appropriate amperage fuse.
9	**INSPECT IF MALFUNCTION IS IN WIRING HARNESS (NO CONTINUITY BETWEEN FUSE BLOCK AND KEYLESS RECEIVER) OR ELSEWHERE** • Turn the ignition switch to the ON position. • Measure the voltage at the following keyless receiver terminal: — IG1 signal (terminal A) • Is the voltage **B+**?	Yes	Go to the next step.
		No	Repair the wiring harness between the fuse block and keyless receiver, then go to Step 13.
10	**INSPECT IF MALFUNCTION IS IN WIRING HARNESS (NO CONTINUITY BETWEEN KEYLESS RECEIVER AND GROUND) OR ELSEWHERE** • Is there continuity between keyless receiver terminal E and ground?	Yes	Go to the next step.
		No	Repair the wiring harness between the keyless receiver and ground, then go to Step 13.
11	**INSPECT IF MALFUNCTION IS IN WIRING HARNESS (NO CONTINUITY BETWEEN KEYLESS RECEIVER AND BCM) OR ELSEWHERE** • Turn the ignition switch to the ON position. • Disconnect the keyless receiver connector and BCM connector. • Is there continuity between the following terminals? — 7I (BCM connector)—C (keyless receiver connector)	Yes	Go to the next step.
		No	Repair the wiring harness between the keyless receiver and BCM, then go to Step 13.
12	**INSPECT IF MALFUNCTION IS IN WIRING HARNESS (NO CONTINUITY BETWEEN KEYLESS RECEIVER AND BCM) OR BCM** • Measure the voltage at keyless receiver terminal C. — When transmitter operated: • Any transmitter button is operated : **0.5 V** • Any transmitter button is not operated : **3.5 V** • Is the voltage normal?	Yes	Replace the BCM, then go to the next step.
		No	Replace the keyless receiver, then go to the next step.
13	**REINSPECT MALFUNCTION SYMPTOM AFTER REPAIR** • Does the keyless entry system operate properly?	Yes	Troubleshooting completed. Explain repairs to the customer.
		No	Reinspect the malfunction symptoms, then repeat from Step 1 if the malfunction recurs.

NO.3 TRANSMITTER ID CODE CANNOT BE REPROGRAMMED [KEYLESS ENTRY SYSTEM]

E6U090369000W06

3	Transmitter ID code cannot be reprogrammed
DESCRIPTION	• Malfunction in transmitter battery, transmitter, BCM circuit, or keyless receiver circuit.
POSSIBLE CAUSE	• Malfunction in transmitter battery, transmitter, BCM, or keyless receiver.

KEYLESS CONTROL MODULE
WIRING HARNESS-SIDE CONNECTOR

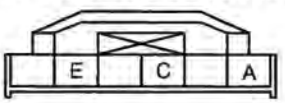

BODY CONTROL MODULE (BCM)
WIRING HARNESS-SIDE CONNECTOR

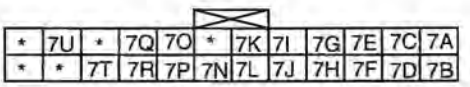



Diagnostic procedure

STEP	INSPECTION		ACTION
1	**INSPECT TRANSMITTER BATTERY INSTALLATION AND TYPE** • Visually inspect the transmitter battery. • Are the below items correct? — Transmitter battery installation (correct polarity) — Battery type: CR1620	Yes	Go to the next step.
		No	Properly install the battery or replace the battery with the specified battery (CR1620), and then go to Step 11.
2	**INSPECT TRANSMITTER BATTERY TERMINALS FOR RUST AND POOR CONNECTION** • Visually inspect the transmitter. — Is there rust on the transmitter battery terminals (positive or negative)? — Is there poor connection between the terminals and battery?	Yes	Replace the transmitter battery or repair the transmitter battery terminal, then go to Step 11.
		No	Go to the next step.
3	**INSPECT TRANSMITTER BATTERY** • Inspect the transmitter battery. • Is the battery voltage normal?	Yes	Go to the next step.
		No	Replace the transmitter battery, then go to Step 11.
4	**INSPECT IF MALFUNCTION IS IN TRANSMITTER BATTERY OR ELSEWHERE** • Replace with a transmitter battery known to be good. • Does the keyless entry system operate properly?	Yes	Replace the transmitter battery, then go to Step 11.
		No	Go to the next step.
5	**INSPECT IF MALFUNCTION IS IN TRANSMITTER OR BCM** • Reprogram the transmitter ID code using another known good transmitter. • Does the keyless entry system operate properly?	Yes	Replace the transmitter and reprogram the transmitter ID code, then go to Step 11.
		No	Go to the next step.
6	**INSPECT POWER SUPPLY FUSE** • Is the keyless receiver power supply fuse normal?	Yes	Go to the next step.
		No	Install an appropriate amperage fuse, then go to Step 11.
7	**INSPECT IF MALFUNCTION IS IN WIRING HARNESS (NO CONTINUITY BETWEEN FUSE BLOCK AND KEYLESS RECEIVER) OR ELSEWHERE** • Measure the voltage at the following keyless receiver terminal: — Power supply signal (terminal A) • Is the voltage **B+**?	Yes	Go to the next step.
		No	Repair the wiring harness between the fuse block and keyless receiver, then go to Step 11.

STEP	INSPECTION		ACTION
8	**INSPECT IF MALFUNCTION IS IN WIRING HARNESS (NO CONTINUITY BETWEEN KEYLESS RECEIVER AND GROUND) OR ELSEWHERE** • Is there continuity between keyless receiver terminal E and ground?	Yes	Go to the next step.
		No	Repair the wiring harness between the keyless receiver and ground, then go to Step 11.
9	**INSPECT IF MALFUNCTION IS IN WIRING HARNESS (NO CONTINUITY BETWEEN KEYLESS RECEIVER AND BCM) OR ELSEWHERE** • Disconnect the keyless receiver connector and BCM connector. • Is there continuity between the following terminals? — 7I (BCM connector)—C (keyless receiver connector)	Yes	Go to the next step.
		No	Repair the wiring harness between the keyless receiver and BCM, then go to Step 11.
10	**INSPECT IF MALFUNCTION IS IN WIRING HARNESS (NO CONTINUITY BETWEEN KEYLESS RECEIVER AND BCM) OR BCM** • Measure the voltage at BCM terminal C. — When transmitter operated: • Any transmitter button is operated: **0.5 V** • Any transmitter button is operated: **3.5 V** • Is the voltage normal?	Yes	Replace the BCM, then go to the next step.
		No	Replace the keyless receiver, then go to the next step.
11	**REINSPECT MALFUNCTION SYMPTOM AFTER REPAIR** • Does the keyless entry system operate properly?	Yes	Troubleshooting completed. Explain repairs to the customer.
		No	Reinspect the malfunction symptoms, then repeat from Step 1 if the malfunction recurs.

09–03H SYMPTOM TROUBLESHOOTING [INSTRUMENT CLUSTER]

. MPTOM TROUBLESHOOTING [INSTRUMENT CLUSTER] 09–03H–1
QUICK DIAGNOSTIC CHART [INSTRUMENT CLUSTER] 09–03H–2
NO. 1 FUEL GAUGE NEEDLE POSITION INCORRECT 09–03H–3
NO. 2 ALL METERS AND GAUGES DO NOT OPERATE 09–03H–4
NO. 3 ABS WARNING LIGHT ILLUMINATES 09–03H–5
NO. 4 MIL ILLUMINATES 09–03H–6
NO. 5 BRAKE SYSTEM WARNING LIGHT ILLUMINATES 09–03H–7
NO. 6 INSTRUMENT CLUSTER ILLUMINATION DOES NOT ILLUMINATE 09–03H–8

SYMPTOM TROUBLESHOOTING [INSTRUMENT CLUSTER]

E6U090355430W01

No.	TROUBLESHOOTING ITEM	PAGE
1	Fuel gauge needle position incorrect	(See 09–03H–3 NO. 1 FUEL GAUGE NEEDLE POSITION INCORRECT.)
2	All meters and gauges do not operate	(See 09–03H–4 NO. 2 ALL METERS AND GAUGES DO NOT OPERATE.)
3	ABS warning light illuminates	(See 09–03H–5 NO. 3 ABS WARNING LIGHT ILLUMINATES.)
4	MIL illuminates	(See 09–03H–6 NO. 4 MIL ILLUMINATES.)
5	Brake system warning light illuminates	(See 09–03H–7 NO. 5 BRAKE SYSTEM WARNING LIGHT ILLUMINATES.)
6	Instrument cluster illumination does not illuminate	(See 09–03H–8 NO. 6 INSTRUMENT CLUSTER ILLUMINATION DOES NOT ILLUMINATE.)

QUICK DIAGNOSTIC CHART [INSTRUMENT CLUSTER]

E6U090355430W02

X: Applicable

No.	Troubleshooting item / Possible factor	Poor connection of fuel gauge sender unit connector, terminal damage	Poor connection of instrument cluster connector, terminal damage	Fuel gauge sender unit	Instrument cluster	Fuel gauge sender unit is improperly installed	Open or short circuit in wiring harness between instrument cluster and GND	Open or short circuit in wiring harness between instrument cluster and fuel gauge sender unit	Fuse malfunction (METER)	Open or short circuit in power supply (IG1) wiring harness	Open or short circuit in GND wiring harness	Poor connection of ABS/TCS HU/CM connector, terminal damage	ABS/TCS HU/CM	Short circuit in wiring harness between CAN-L, CAN-H and GND	Open circuit in CAN wiring harness (CAN-L, CAN-H)	CAN wiring harness (CAN-L, CAN-H) short each other	Poor connection of PCM connector, terminal damage	PCM	Poor connection of BCM connector, terminal damage	BCM	Poor connection of brake fluid level sensor connector, terminal	Brake fluid level sensor	Poor connection of Parking brake switch connector, terminal damage	Parking brake switch	Fuse malfunction (ROOM ILLUMI)
1	The indicator position of the fuel gauge is not correct	X	X	X	X	X	X	X											X	X					
2	Neither the entire meter nor gauges operate		X		X				X	X	X														
3	ABS warning light illuminates		X		X							X	X	X	X	X									
4	MIL illuminates		X		X									X	X	X	X	X							
5	Brake system warning light illuminates		X		X							X	X	X	X	X					X	X	X	X	
6	Instrument cluster illumination does not illuminate		X		X																				X

E6U903EW5O01

NO. 1 FUEL GAUGE NEEDLE POSITION INCORRECT

E6U090355430W03

1	Fuel gauge needle position incorrect
POSSIBLE CAUSE	• Fuel gauge sender unit malfunction • Instrument cluster malfunction • BCM malfunction • Connector or pin malfunction • Fuel gauge sender unit is improperly installed • Open or short circuit in wiring harness between instrument cluster and GND • Open or short circuit in wiring harness between instrument cluster and fuel gauge sender unit

Diagnostic procedure

STEP	INSPECTION		ACTION
1	• Turn the ignition switch to the ON position. • Inspect the fuel gauge needle does not move after ignition switch is turned off, or display does not indicate F even though fuel tank is full. • Is fuel gauge okay?	Yes	Troubleshooting completed.
		No	Go to the next step.
2	• Start the instrument cluster input/output check mode. • Select the check code 22. • Display value is **12—129**?	Yes	Go to the next step.
		No	Go to Step 4.
3	• Perform the check code 23 inspection. • Is there any malfunction?	Yes	Replace the instrument cluster.
		No	Go to the next step.
4	• Perform the check code 22 inspection. • Is there any malfunction?	Yes	Go to the next step.
		No	Go to Step 6.
5	• Turn the ignition switch off. • Inspect the instrument cluster connector terminals for poor connection (such as damaged/pulled-out pins, and corrosion). • Is the terminals are okay? 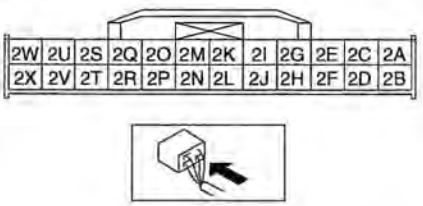	Yes	Replace the instrument cluster.
		No	Repair or replace the terminal.
6	• Turn the ignition switch to LOCK position. • Remove the instrument cluster. • Disconnect the instrument cluster connector. • Inspect for continuity the following wiring harness. — 2M terminal—GND — 2D terminal—GND • Is there continuity?	Yes	Repair or replace the wiring harness between the instrument cluster and GND.
		No	Go to the next step.
7	• Turn the ignition switch off. • Inspect the fuel gauge sender unit connector terminals for poor connection (such as damaged/pulled-out pins, and corrosion). • Is the terminals are okay?	Yes	Go to the next step.
		No	Repair or replace the terminal.
8	• Turn the ignition switch to LOCK position. • Inspect for continuity following the wiring harness between instrument cluster and fuel gauge sender unit. — 2M terminal—C terminal — 2D terminal—A terminal • Is there continuity?	Yes	Go to the next step.
		No	Inspect the BCM and BCM terminals. • If there is a malfunction, replace the BCM. • If there is no malfunction, repair or replace the wiring harness between instrument cluster and fuel gauge sender unit.
9	• Turn the ignition switch off. • Is fuel gauge sender unit installed properly?	Yes	Inspect the fuel gauge sender unit.
		No	Reinstall the fuel gauge sender unit.

NO. 2 ALL METERS AND GAUGES DO NOT OPERATE

E6U090355430W04

2	All meters and gauges do not operate
POSSIBLE CAUSE	• Instrument cluster malfunction • Connector or pin malfunction • Fuse malfunction • Open or short circuit in power supply (IG1) wiring harness • Open or short circuit in GND wiring harness

Diagnostic procedure

STEP	INSPECTION		ACTION
1	• Turn the ignition switch to the ON position. • Inspect the following: — Does the odometer/tripmeter illuminate? — Does the fuel gauge operate? — Dose the MIL illumination turn off within **approx. 3 s**?	Yes	Troubleshooting completed.
		No	Go to the next step.
2	• Inspect the METER fuse. • Is the fuse okay?	Yes	Go to the next step.
		No	Replace the fuse. • If the fuse is melted, inspect the wiring harness for short to ground. Repair or replace the wiring harness, then replace the fuse.
3	• Turn the ignition switch to LOCK position. • Remove the instrument cluster. • Disconnect the instrument cluster connector. • Inspect the voltage between instrument cluster wiring harness-side connector terminal 2F and terminal 2V. • Turn the ignition switch to ON position. • Is the voltage B+? 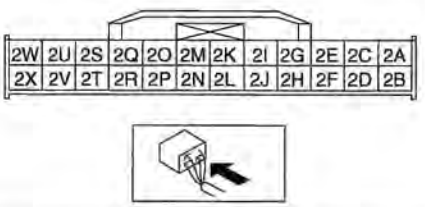 	Yes	Go to the next step.
		No	Inspect the suspect wiring harness, then repair or replace the wiring harness.
4	• Turn the ignition switch off. • Inspect the instrument cluster connector terminals for poor connection (such as damaged/pulled-out pins, and corrosion). • Is the terminals are okay?	Yes	Replace the instrument cluster.
		No	Repair or replace the terminal.

NO. 3 ABS WARNING LIGHT ILLUMINATES

E6U090355430W05

3	ABS warning light illuminates
POSSIBLE CAUSE	• ABS/TCS HU/CM malfunction • Instrument cluster malfunction • Connector or pin malfunction • Short circuit in wiring harness between CAN-L, CAN-H and GND • Open circuit in CAN wiring harness (CAN-L, CAN-H) • CAN wiring harness (CAN-L, CAN-H) short each other

Diagnostic procedure

STEP	INSPECTION		ACTION
1	• Start the engine. • Does the ABS warning light turn off?	Yes	Troubleshooting completed.
		No	Go to the next step.
2	• Are there a number of warning lights illuminated?	Yes	Go to Step 4.
		No	Go to the next step.
3	• Start the instrument cluster input/output check mode. • Does the ABS warning light turn off with a check code other than 26?	Yes	Inspect the ABS/TCS HU/CM.
		No	Replace the instrument cluster.
4	• Disconnect the negative battery cable. • Measure the resistance between the DLC-2 terminals F and E. • Is the resistance **54—66 ohms**?	Yes	Go to the next step.
		No	Go to Step 6.
5	• Inspect the DLC-2 terminals F and E for short to power supply or GND. • Is there any malfunction?	Yes	Inspect the wiring harness and CAN system-related module. Repair or replace the malfunctioning part.
		No	Replace the instrument cluster.
6	• Turn the ignition switch off. • Inspect the instrument cluster connector terminals for poor connection (such as damaged/pulled-out pins, and corrosion). • Is the terminals are okay? 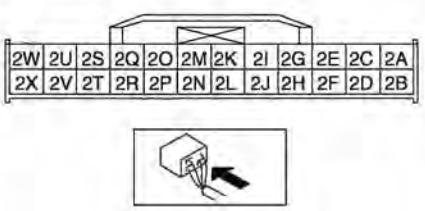 	Yes	Replace the instrument cluster.
		No	Repair or replace the terminal.

09–03H

NO. 4 MIL ILLUMINATES

E6U090355430W06

4	MIL illuminates
POSSIBLE CAUSE	• PCM malfunction • Instrument cluster malfunction • Connector or pin malfunction • Short circuit in wiring harness between CAN-L, CAN-H and GND • Open circuit in CAN wiring harness (CAN-L, CAN-H) • CAN wiring harness (CAN-L, CAN-H) short each other

Diagnostic procedure

STEP	INSPECTION		ACTION
1	• Start the engine. • Does the MIL turn off?	Yes	Troubleshooting completed.
		No	Go to the next step.
2	• Are there a number of warning lights illuminated?	Yes	Go to Step 4.
		No	Go to the next step.
3	• Start the instrument cluster input/output check mode. • Does the MIL turn off with a check code other than 26?	Yes	Inspect the PCM.
		No	Replace the instrument cluster.
4	• Disconnect the negative battery cable. • Measure the resistance between the DLC-2 terminals F and E. • Is the resistance **54—66 ohms**?	Yes	Go to the next step.
		No	Go to Step 6.
5	• Inspect the DLC-2 terminals F and E for short to power supply or GND. • Is there any malfunction?	Yes	Inspect the wiring harness and CAN system-related module. Repair or replace the malfunctioning part.
		No	Replace the instrument cluster.
6	• Turn the ignition switch off. • Inspect the instrument cluster connector terminals for poor connection (such as damaged/pulled-out pins, and corrosion). • Is the terminals are okay? 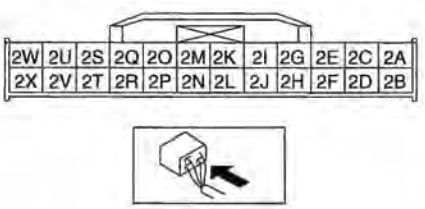	Yes	Replace the instrument cluster.
		No	Repair or replace the terminal.

NO. 5 BRAKE SYSTEM WARNING LIGHT ILLUMINATES

E6U090355430W07

5	Brake system warning light illuminates
POSSIBLE CAUSE	• ABS/TCS HU/CM malfunction • Brake fluid level sensor malfunction • Parking brake switch malfunction • Instrument cluster malfunction • Connector or pin malfunction • Short circuit in wiring harness between CAN-L, CAN-H and GND • Open circuit in CAN wiring harness (CAN-L, CAN-H) • CAN wiring harness (CAN-L, CAN-H) short each other

Diagnostic procedure

STEP	INSPECTION		ACTION
1	• Start the engine. • release the parking brake. • Does the brake system warning light turn off?	Yes	Troubleshooting completed.
		No	Go to the next step.
2	• Are there a number of warning lights illuminated?	Yes	Go to Step 5.
		No	Go to the next step.
3	• Does the brake fluid need replenishment?	Yes	Add brake fluid.
		No	Go to the next step.
4	• Start the instrument cluster input/output check mode. • Does the brake system warning light turn off with a check code other than 26?	Yes	Inspect the ABS/TCS HU/CM, brake fluid level sensor, parking brake switch or connectors.
		No	Replace the instrument cluster.
5	• Disconnect the negative battery cable. • Measure the resistance between the DLC-2 terminals F and E. • Is the resistance **54—66 ohms**?	Yes	Go to the next step.
		No	Go to Step 7.
6	• Inspect the DLC-2 terminals F and E for short to power supply or GND. • Is there any malfunction?	Yes	Inspect the wiring harness and CAN system-related module. Repair or replace the malfunctioning part.
		No	Replace the instrument cluster.
7	• Turn the ignition switch off. • Inspect the instrument cluster connector terminals for poor connection (such as damaged/pulled-out pins, and corrosion). • Is the terminals are okay? 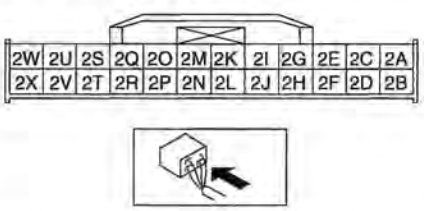	Yes	Replace the instrument cluster.
		No	Repair or replace the terminal.

09–03H

NO. 6 INSTRUMENT CLUSTER ILLUMINATION DOES NOT ILLUMINATE

E6U090355430W08

6	Instrument cluster illumination does not illuminate
POSSIBLE CAUSE	• Instrument cluster malfunction • Connector or pin malfunction • Fuse malfunction

Diagnostic procedure

STEP	INSPECTION		ACTION
1	• Turn the light switch to the TNS position. • Does the instrument cluster illumination turn on?	Yes	Troubleshooting completed.
		No	Go to the next step.
2	• Does the non-illumination include the entire instrument cluster?	Yes	Go to the next step.
		No	Replace the instrument cluster.
3	• Inspect the ROOM and ILLUMI fuse. • Are the fuses okay?	Yes	Go to the next step.
		No	Replace the fuse. • If the fuse is melted, inspect the wiring harness for short to ground. Repair or replace the wiring harness, then replace the fuse.
4	• Turn the ignition switch off. • Inspect the instrument cluster connector terminals for poor connection (such as damaged/pulled-out pins, and corrosion). • Is the terminals are okay? 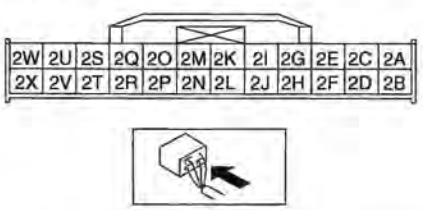 	Yes	Replace the instrument cluster.
		No	Repair or replace the terminal.

09–10 BODY PANELS

LOCATION INDEX 09–10–2
FUEL-FILLER LID REMOVAL/INSTALLATION 09–10–2
FUEL-FILLER LID ADJUSTMENT 09–10–3
HOOD REMOVAL/INSTALLATION [EXCEPT L3 WITH TC] 09–10–3
Hood Release Lever Removal Note 09–10–3
HOOD REMOVAL/INSTALLATION [L3 WITH TC] 09–10–4
Hood Release Lever Removal Note 09–10–4
HOOD ADJUSTMENT [EXCEPT L3 WITH TC] 09–10–5
Gap Adjustment 09–10–5
Height Adjustment 09–10–5
HOOD ADJUSTMENT [L3 WITH TC] 09–10–6
Gap Adjustment 09–10–6
Height Adjustment 09–10–7
TRUNK LID REMOVAL/INSTALLATION 09–10–8
TRUNK LID ADJUSTMENT 09–10–9
STAY DAMPER DISPOSAL 09–10–9
FRONT BUMPER REMOVAL/INSTALLATION 09–10–10
Front Bumper Removal Note 09–10–10
Front Bumper Installation Note 09–10–10
FRONT BUMPER DISASSEMBLY/ASSEMBLY [EXCEPT L3 WITH TC] 09–10–11
FRONT BUMPER DISASSEMBLY/ASSEMBLY [L3 WITH TC] 09–10–12
FRONT BUMPER REINFORCEMENT REMOVAL/INSTALLATION 09–10–13
REAR BUMPER REMOVAL/INSTALLATION 09–10–13
Rear bumper Removal Note 09–10–14
Rear bumper Installation Note 09–10–14
Reflector Removal Note 09–10–14
REAR BUMPER DISASSEMBLY/ASSEMBLY [L3 WITH TC] 09–10–15
Bumper Guard Removal Note 09–10–15
Reflector Removal Note 09–10–15
REAR BUMPER REINFORCEMENT REMOVAL/INSTALLATION 09–10–16
FRONT FENDER PANEL REMOVAL/INSTALLATION 09–10–16
SHROUD PANEL REMOVAL/INSTALLATION 09–10–17
COWL PANEL REMOVAL/INSTALLATION 09–10–17

LOCATION INDEX

E6U091056100W01

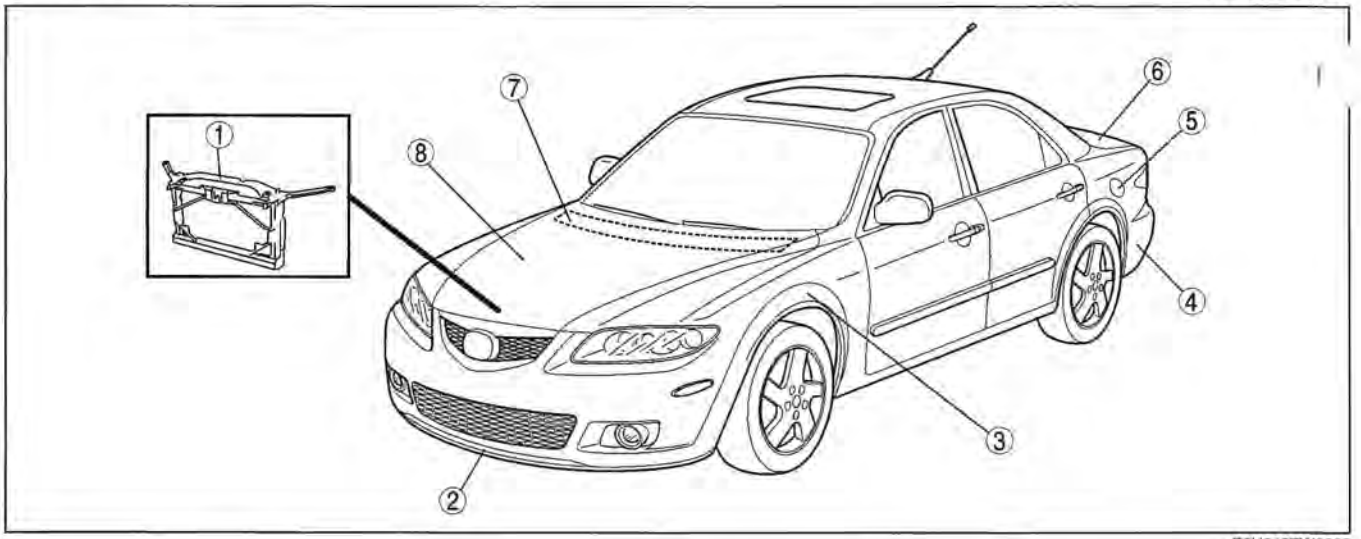

E6U910ZW5005

1	Shroud panel (See 09–10–17 SHROUD PANEL REMOVAL/INSTALLATION)
2	Front bumper (See 09–10–10 FRONT BUMPER REMOVAL/INSTALLATION) (See 09–10–11 FRONT BUMPER DISASSEMBLY/ASSEMBLY [EXCEPT L3 WITH TC]) (See 09–10–12 FRONT BUMPER DISASSEMBLY/ASSEMBLY [L3 WITH TC]) Front bumper reinforcement (See 09–10–13 FRONT BUMPER REINFORCEMENT REMOVAL/INSTALLATION)
3	Front fender panel (See 09–10–16 FRONT FENDER PANEL REMOVAL/INSTALLATION)
4	Rear bumper (See 09–10–13 REAR BUMPER REMOVAL/INSTALLATION) (See 09–10–15 REAR BUMPER DISASSEMBLY/ASSEMBLY [L3 WITH TC]) Rear bumper reinforcement (See 09–10–16 REAR BUMPER REINFORCEMENT REMOVAL/INSTALLATION)
5	Fuel-filler lid (See 09–10–2 FUEL-FILLER LID REMOVAL/INSTALLATION) (See 09–10–3 FUEL-FILLER LID ADJUSTMENT)
6	Trunk lid (See 09–10–8 TRUNK LID REMOVAL/INSTALLATION) (See 09–10–9 TRUNK LID ADJUSTMENT)
7	Cowl panel (See 09–10–17 COWL PANEL REMOVAL/INSTALLATION)
8	Hood (See 09–10–3 HOOD REMOVAL/INSTALLATION [EXCEPT L3 WITH TC]) (See 09–10–4 HOOD REMOVAL/INSTALLATION [L3 WITH TC]) (See 09–10–5 HOOD ADJUSTMENT [EXCEPT L3 WITH TC]) (See 09–10–6 HOOD ADJUSTMENT [L3 WITH TC])

FUEL-FILLER LID REMOVAL/INSTALLATION

1. Remove the bolts, then remove the fuel-filler lid.
2. Install in the reverse order of removal.
3. Adjust the fuel-filler lid. (See 09–10–3 FUEL-FILLER LID ADJUSTMENT.)

E6U091042400W01

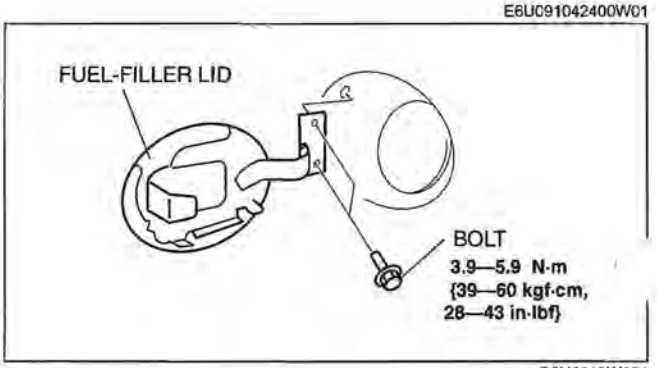

B6U0910W001

FUEL-FILLER LID ADJUSTMENT

E6U091042400W02

1. If not as specified, loosen the fuel-filler lid installation bolts, and reposition the fuel-filler lid.
2. Measure the gap and height difference between the fuel-filler lid and the body.

Clearance
a: 2.0—4.0 mm {0.079—0.15 in}
b: -1.5—0.5 mm {-0.06—0.019 in}

3. Tighten the bolts.

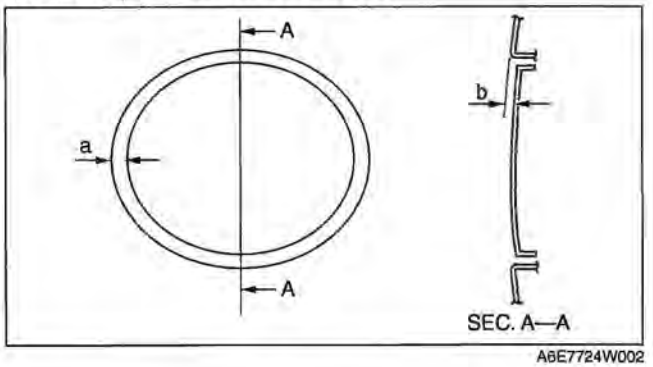

A6E7724W002

HOOD REMOVAL/INSTALLATION [EXCEPT L3 WITH TC]

E6U091056601W01

Warning
- **Removing the hood without supporting can be dangerous. The hood may fall and injure you. Always perform the following procedure with at least another person.**

1. Disconnect the windshield washer hose.
2. To remove the hood hinge, remove the front fender panel.
3. To remove the hood lock, remove the radiator grille.
4. To remove the hood release cable, remove the driver-side mud guard.
5. Remove in the order indicated in the table.

1	Hood insulator
2	Shroud seal weatherstrip
3	Parting seal weatherstrip
4	Hood
5	Hood hinge
6	Hood stay
7	Hood switch connector (With theft-deterrent system)
8	Hood lock
9	Hood release lever (See 09–10–3 Hood Release Lever Removal Note)
10	Hood release cable

6. Install in the reverse order of removal.
7. Adjust the hood. (See 09–10–5 HOOD ADJUSTMENT [EXCEPT L3 WITH TC].)

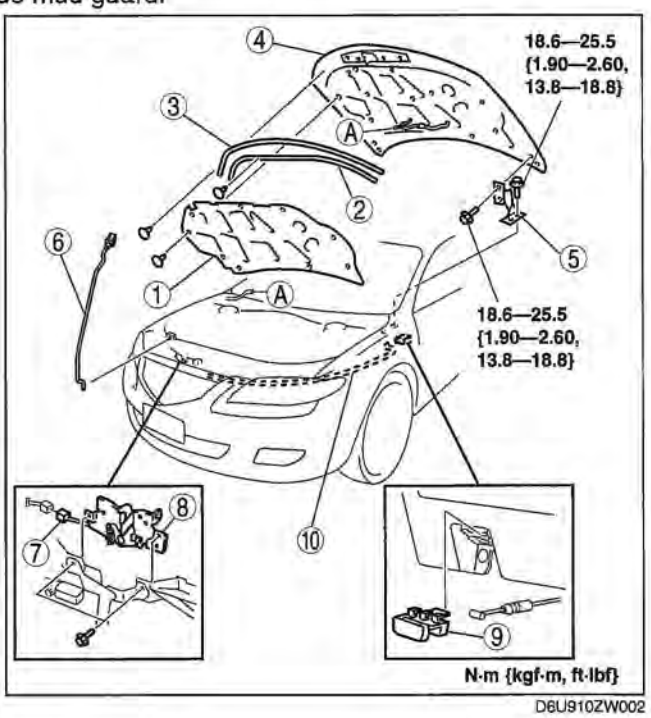

D6U910ZW002

09–10

Hood Release Lever Removal Note

1. Pull the hood release lever.
2. While pushing the tab in the direction of the arrow using a tape-wrapped, small flathead screwdriver, pull the hood release lever outward to remove it from the lower panel.

Caution
- **Remove the hood release cable, taking care not damage it by flathead screwdriver**

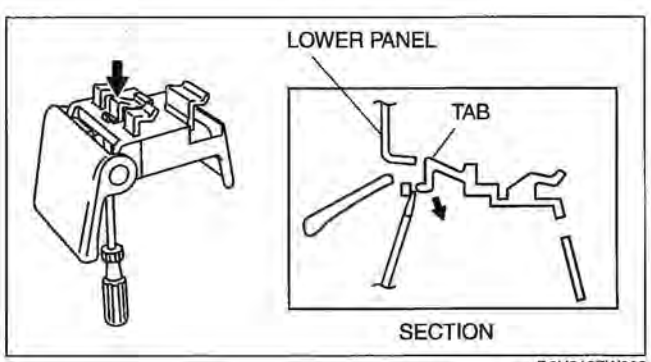

D6U910ZW003

HOOD REMOVAL/INSTALLATION [L3 WITH TC]

E6U091056601W03

Warning
- **Removing the hood without supporting can be dangerous. The hood may fall and injure you. Always perform the following procedure with at least another person.**

1. Remove the air guide.
2. To remove the hood hinge, remove the front fender panel.
3. To remove the hood lock, remove the front bumper.
4. To remove the hood release cable, remove the driver-side mud guard.
5. Remove in the order indicated in the table.

1	Hood insulator
2	Shroud seal weatherstrip
3	Parting seal weatherstrip
4	Hood
5	Hood hinge
6	Hood stay
7	Hood switch connector (With theft-deterrent system)
8	Hood lock
9	Hood release lever (See 09–10–4 Hood Release Lever Removal Note)
10	Hood release cable

6. Install in the reverse order of removal.
7. Adjust the hood. (See 09–10–6 HOOD ADJUSTMENT [L3 WITH TC].)

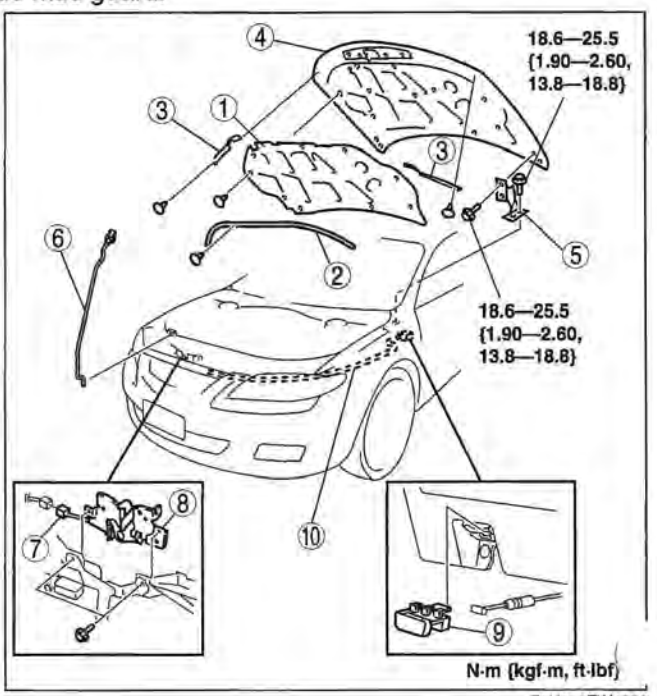

E6U910ZW1002

Hood Release Lever Removal Note

1. Pull the hood release lever.
2. While pushing the tab in the direction of the arrow using a tape-wrapped, small flathead screwdriver, pull the hood release lever outward to remove it from the lower panel.

Caution
- **Remove the hood release cable, taking care not damage it by flathead screwdriver**

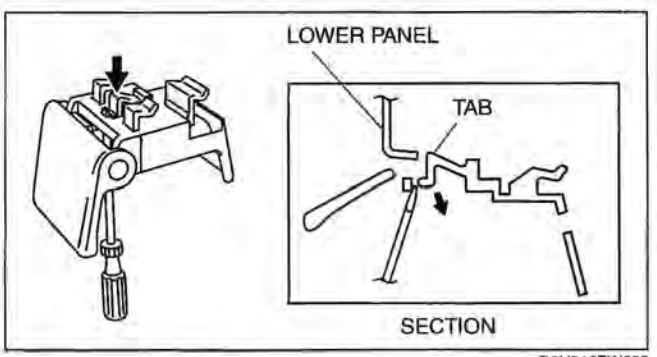

D6U910ZW003

HOOD ADJUSTMENT [EXCEPT L3 WITH TC]

E6U091056601W02

Gap Adjustment

1. Remove the front fender panel. (See 09–10–16 FRONT FENDER PANEL REMOVAL/INSTALLATION.)
2. Loosen the hood hinge installation bolts and reposition the hood.
3. Tighten the bolts.

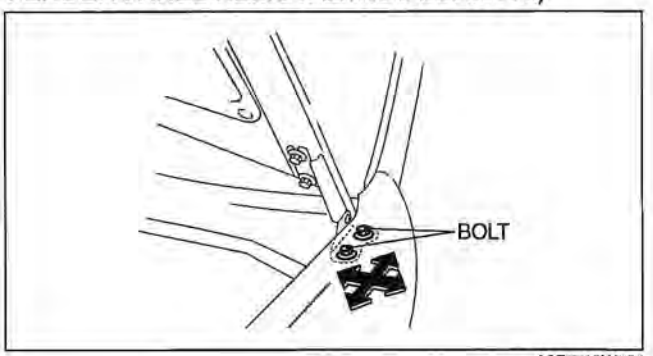

A6E7710W002

4. Verify that the gap between the hood and the body is within the specification.

Clearance
a: 2.5—4.5 mm {0.10—0.17 in}

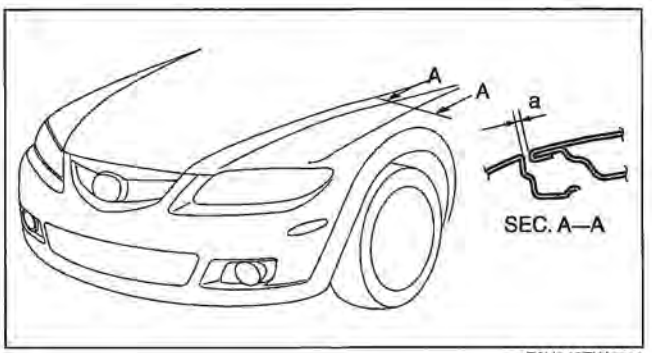

E6U910ZW5006

09–10

Height Adjustment

Turn the stop rubber to adjust the height of the hood.

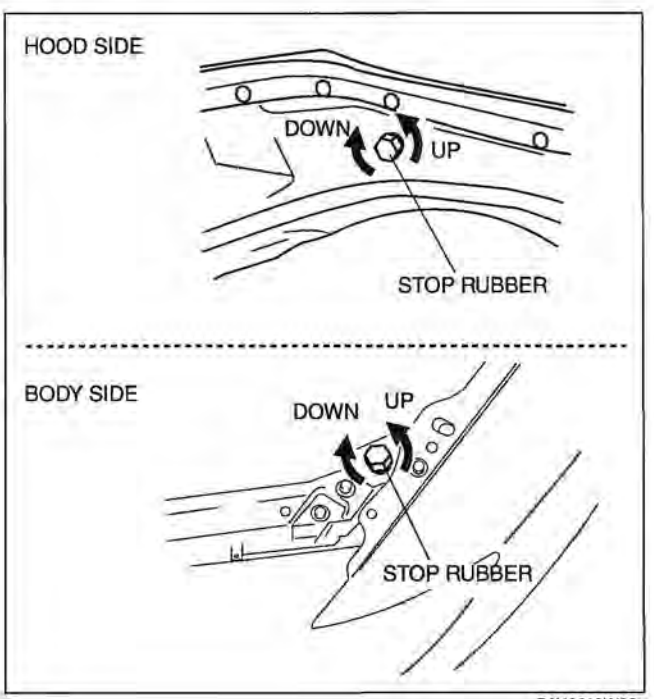

B6U0910W005

2. Verify that the height difference between the hood and the body is within the specification.

Clearance
a: 3.0—6.0 mm {0.12—0.23 in}
b: 2.5—5.5 mm {0.10—0.22 in}
c: 2.4—5.4 mm {0.09—0.21 in}
d: -1.0—1.0 mm {-0.04—0.04 in}

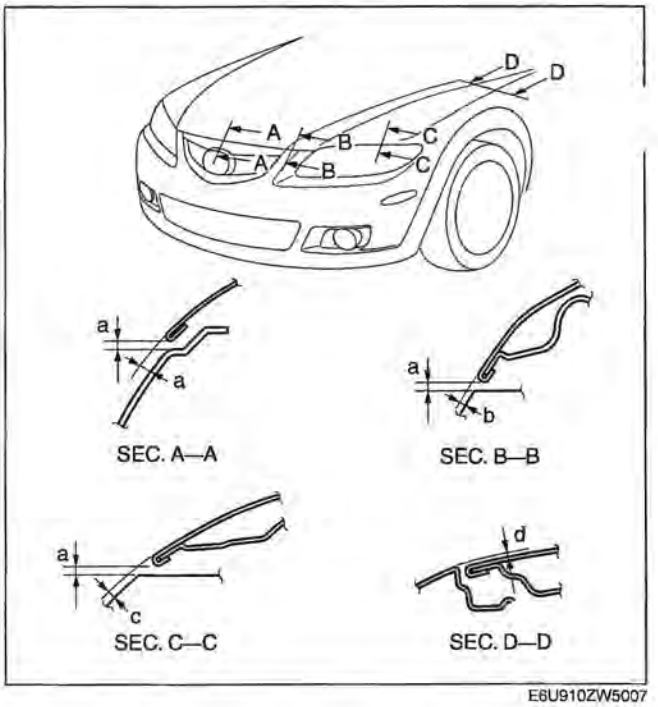

E6U910ZW5007

HOOD ADJUSTMENT [L3 WITH TC]

E6U091056601W04

Gap Adjustment

1. Remove the front fender.
2. Loosen the hood hinge installation bolts and reposition the hood.
3. Tighten the bolts.

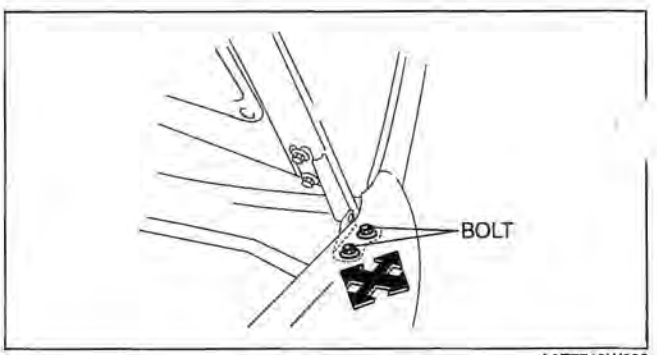

A6E7710W002

4. Verify that the gap between the hood and the body is within the specification.

Clearance
a: 2.5—4.5 mm {0.10—0.17 in}

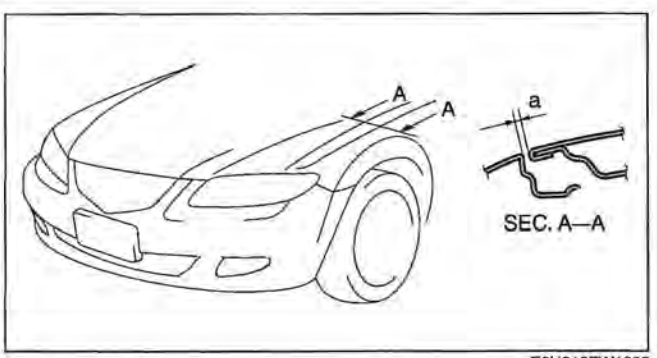

E6U910ZW1003

Height Adjustment

1. Turn the stop rubber to adjust the height of the hood.

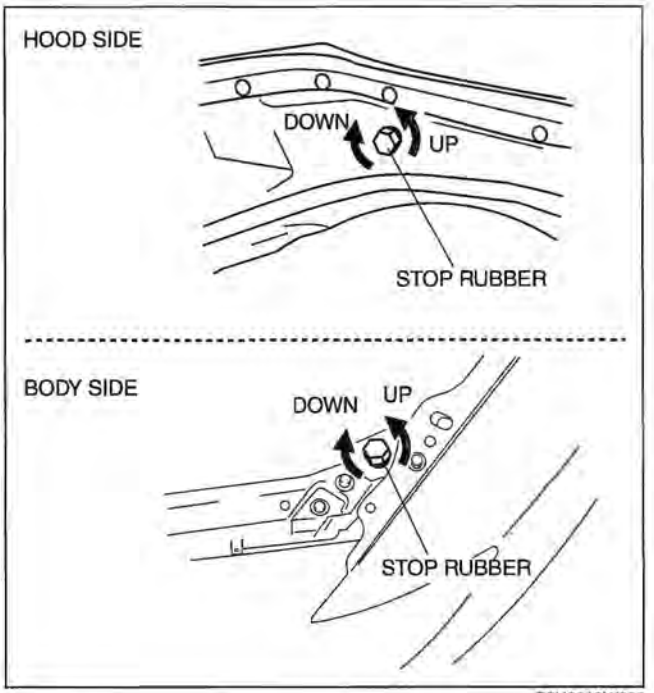

B6U0910W005

2. Verify that the height difference between the hood and the body is within the specification.

Clearance

a: 3.0—6.0 mm {0.12—0.23 in}
b: 2.5—5.5 mm {0.10—0.22 in}
c: 3.1—6.1 mm {0.13—0.24 in}
d: 3.6—6.6 mm {0.15—0.25 in}
e: -1.0—1.0 mm {-0.04—0.04 in}

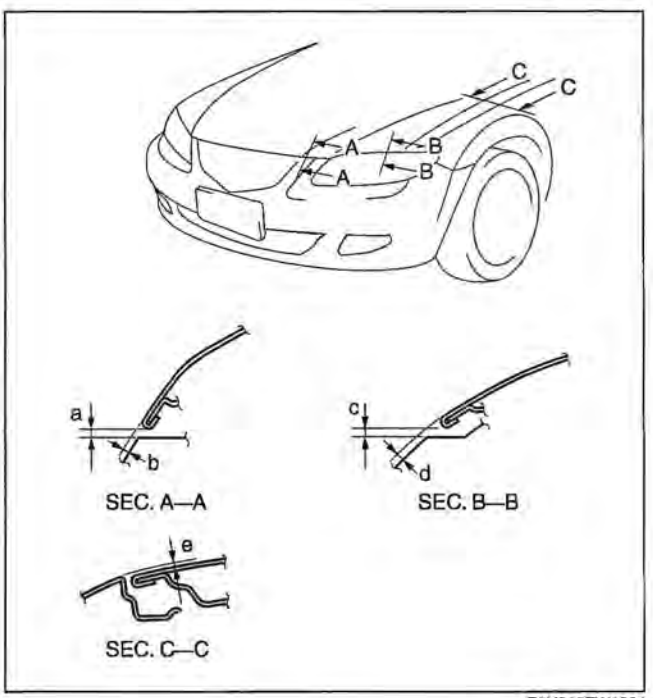

E6U910ZW1004

TRUNK LID REMOVAL/INSTALLATION

E6U091056801W01

Warning

- **Removing the stay damper without supporting the trunk lid can be dangerous. The trunk lid may fall and injure you. Open the trunk lid fully and support it before removing the stay damper.**

1. Disconnect the negative battery cable.
2. Disconnect the trunk lid harness connector, and pull the trunk lid harness out from the cabin.

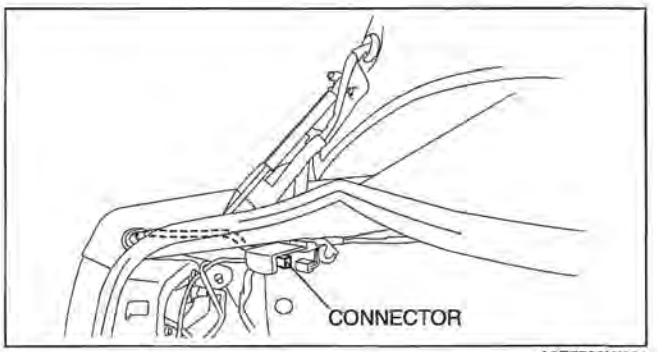

A6E7720W001

3. Disconnect the tabs, which secure the trunk lid harness to the trunk lid hinge.

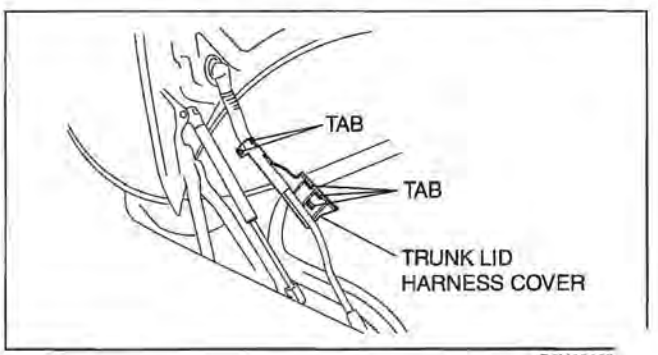

B6U0910V

4. Pry away the stay damper band with a screwdriver.
5. Pry out the connecting part of the stay damper and the hinge with a screwdriver to disconnect them. Then remove the stay damper.

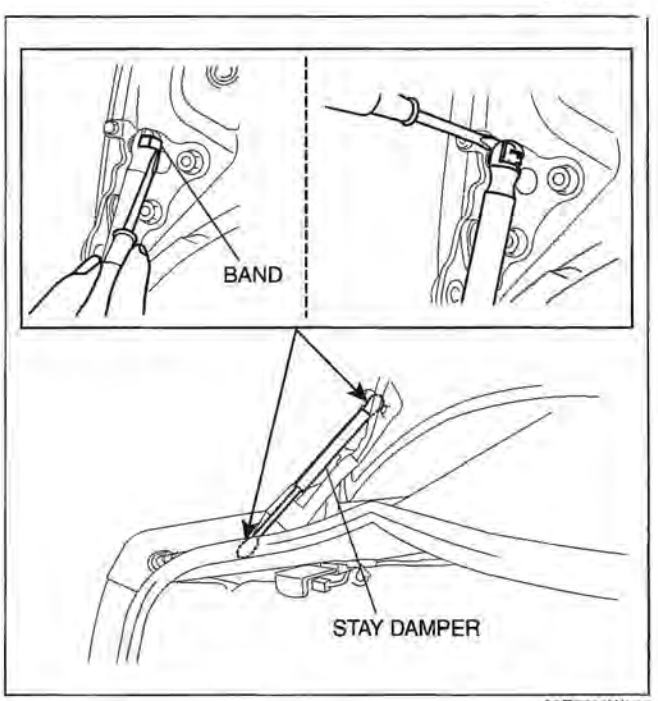

A6E7720W002

6. Remove the nuts, then remove the trunk lid.
7. Remove the bolts, then remove the trunk lid hinge.

Install in the reverse order of removal.
Adjust the trunk lid. (See 09–10–9 TRUNK LID ADJUSTMENT.)

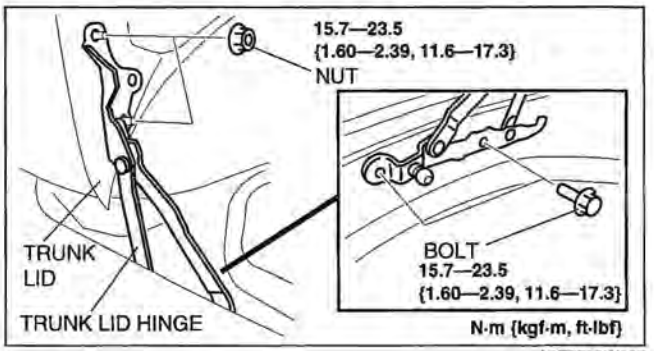

A6E7720W007

TRUNK LID ADJUSTMENT

E6U091056801W02

1. Measure the gap and height difference between the trunk lid and the body.
2. If not as specified, loosen the trunk lid hinge installation bolts or the trunk lid lock striker installation screws, and reposition the trunk lid.

Clearance
a: 2.5—4.5 mm {0.10—0.18 in}
b: -1.0—1.0 mm {-0.04—0.04 in}
c: 4.0—8.0 mm {0.16—0.31 in}

3. Tighten the bolts or screws.

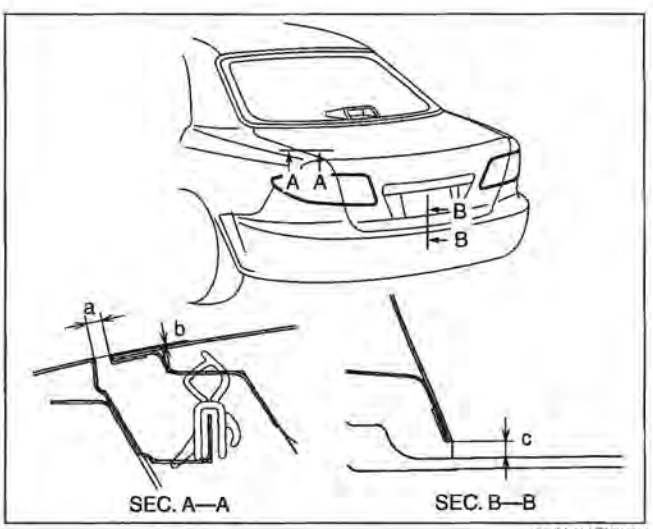

D6U910ZW006

STAY DAMPER DISPOSAL

E6U091056801W03

Note
- The gas in the stay damper is colorless, odorless, and non-toxic.

1. Wear protective eye wear.
2. Lay the stay damper flat.
3. Saw through the stay damper body using a hacksaw.
4. Allow the gas to escape from the stay damper.
5. Discard the stay damper.

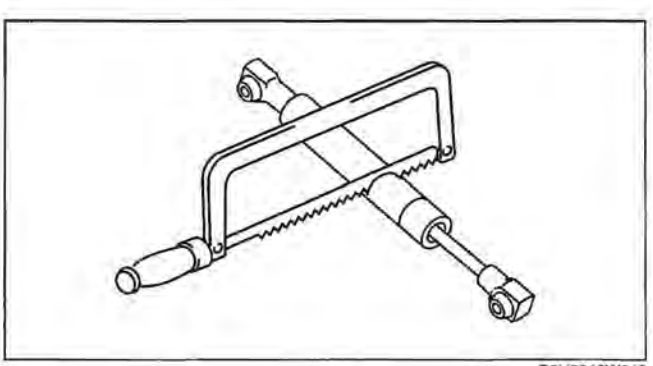

B6U0910W018

FRONT BUMPER REMOVAL/INSTALLATION

E6U091050000W01

1. Disconnect the negative battery cable.
2. Remove in the order indicated in the table.

1	Screw A
2	Fastener A
3	Screw B
4	Bolt
5	Fastener B
6	Screw C
7	Front bumper (See 09–10–10 Front Bumper Removal Note) (See 09–10–10 Front Bumper Installation Note)

3. Disconnect the front side maker light connector.
4. Disconnect the front fog light connector. (Vehicles with front fog lights)
5. Install in the reverse order of removal.
6. Adjust the front fog light aiming for vehicles with front fog lights. (See 09–18–13 FRONT FOG LIGHT ADJUSTMENT.)

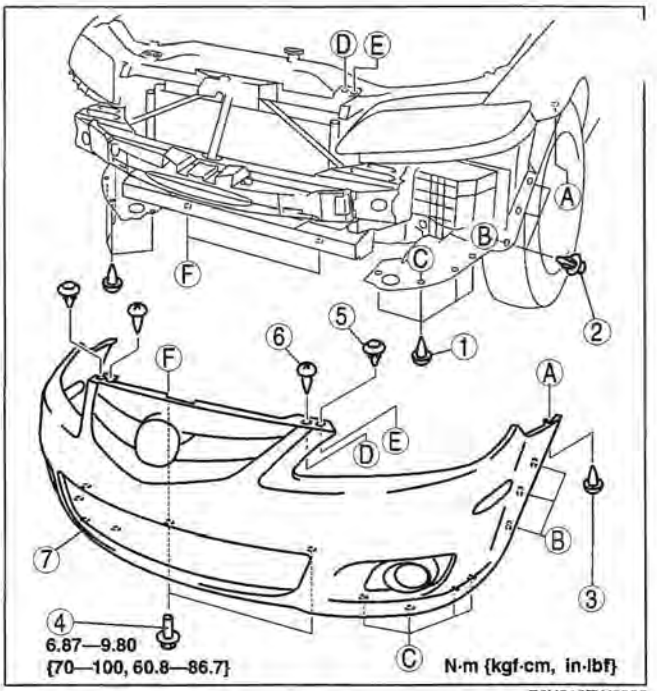

E6U910ZW5000

Front Bumper Removal Note

1. Pull the front bumper ends (wheel arch) outward to disengage from the bumper slider.

Caution

- **If only one side of the front bumper is disengaged from the bumper slider and the bumper falls, it could be damaged. When disengaging the front bumper from the slider, secure the bumper so that it does not fall.**

2. Remove the front bumper from the body.

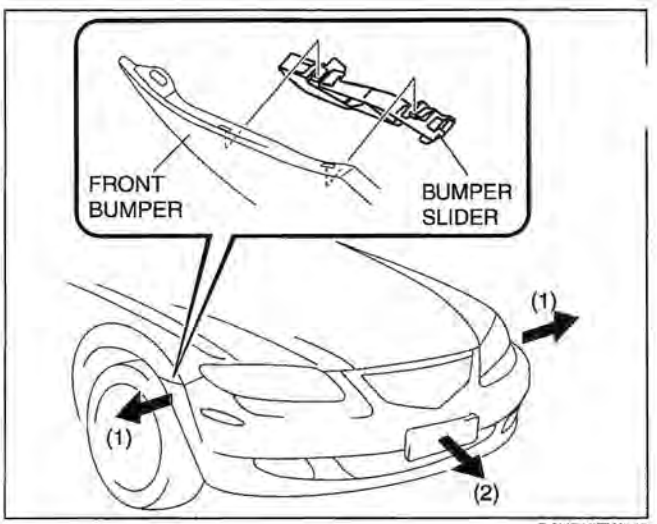

D6U910ZW008

Front Bumper Installation Note

1. Spread the front bumper ends (wheel arches) apart.
2. Attach the front bumper to the body.
3. Press the front bumper connecting area into the body to engage with the bumper slider.

FRONT BUMPER DISASSEMBLY/ASSEMBLY [EXCEPT L3 WITH TC]

E6U091050000W02

1. Remove the front fog light. (Vehicles with front fog lights) (See 09–18–13 FRONT FOG LIGHT REMOVAL/INSTALLATION.)
   Remove the radiator grille. (See 09–16–3 RADIATOR GRILLE REMOVAL/INSTALLATION.)
2. Disassemble in the order indicated in the table.

1	Front bumper mesh
2	Front fog light hole cover
3	Airdam Skirt LH
4	Airdam Skirt RH
5	Front bumper fascia

4. Assemble in the reverse order of disassembly.

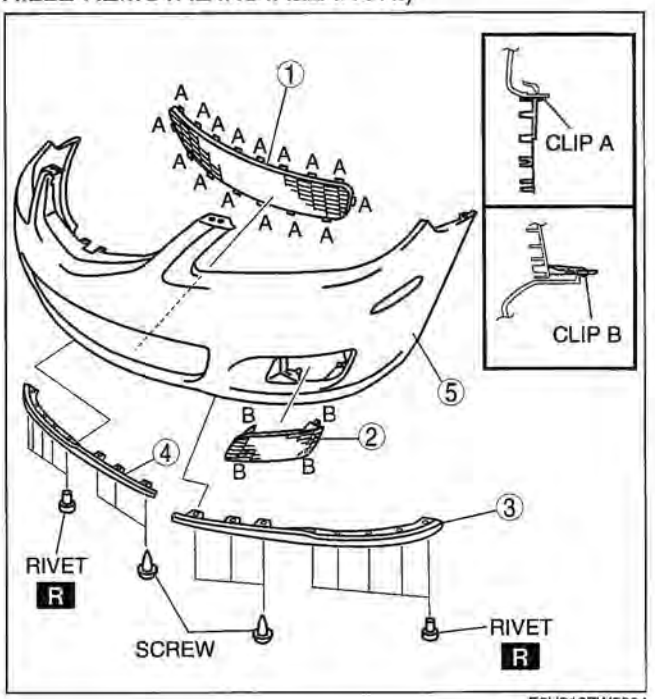

E6U910ZW5004

FRONT BUMPER DISASSEMBLY/ASSEMBLY [L3 WITH TC]

E6U091050000W06

1. Disassemble in the order indicated in the table.
2. Assemble in the reverse order of disassembly.

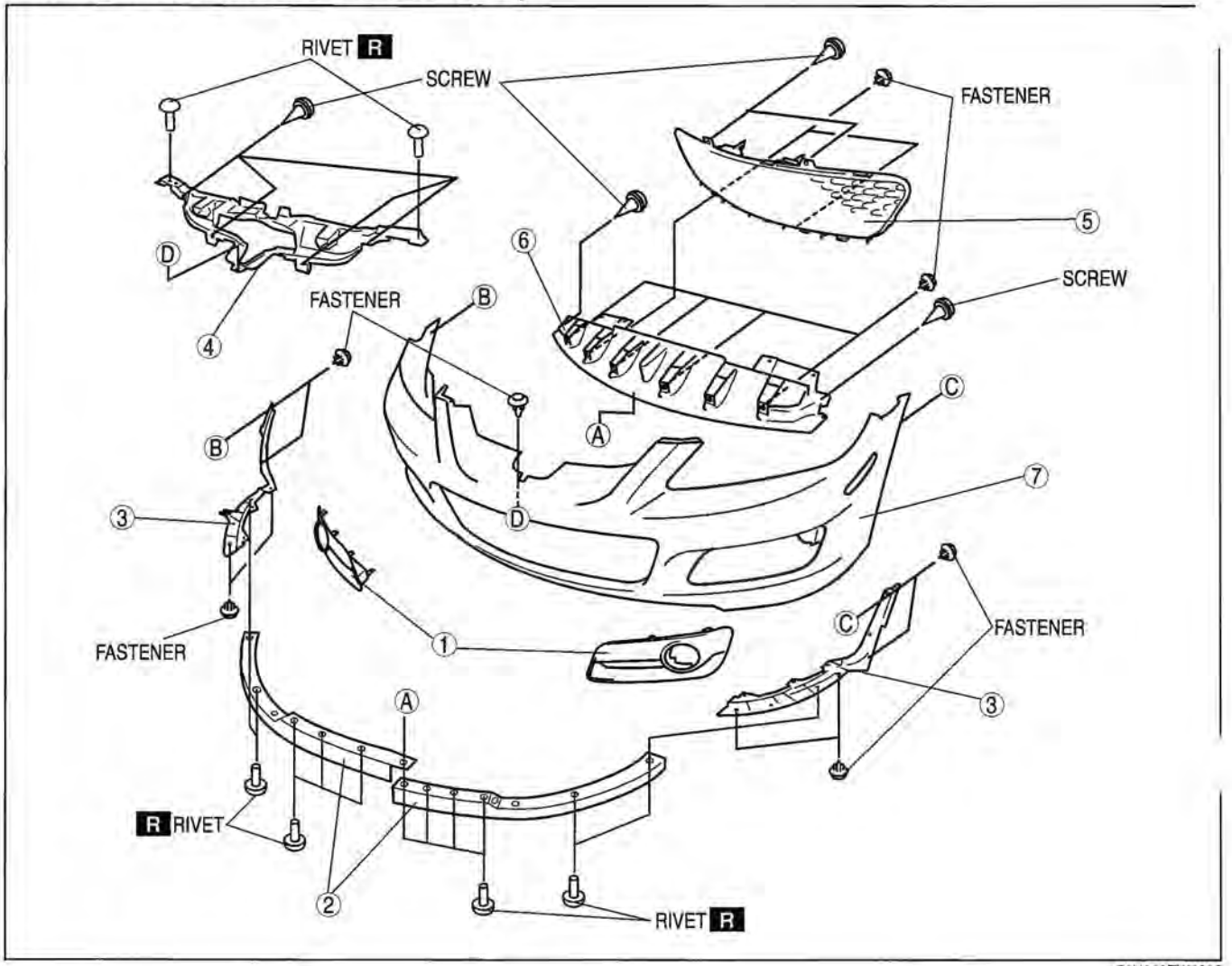

E6U910ZW1006

1	Front fog light cover
2	Airdam Skirt
3	Bracket
4	Air guide upper

5	Front bumper mesh
6	Air guide lower
7	Front bumper fascia

FRONT BUMPER REINFORCEMENT REMOVAL/INSTALLATION

E6U091050000W03

1. Disconnect the negative battery cable.
2. Remove the front bumper. (See 09–10–10 FRONT BUMPER REMOVAL/INSTALLATION.)
   Remove the headlight. (See 09–18–8 FRONT COMBINATION LIGHT REMOVAL/INSTALLATION.)
3. Support the radiator and the condenser using the wire.
5. Remove in the order indicated in the table.

1	Fastener
2	Front energy-absorbing foam
3	Bolt A
4	Bolt B
5	Bolt C
6	Front bumper reinforcement

6. Install in the reverse order of removal.

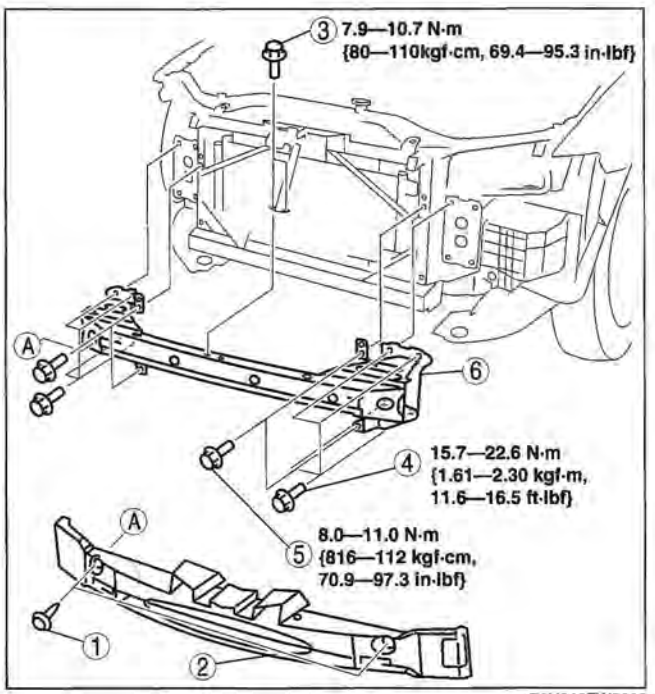

E6U910ZW5003

09–10

REAR BUMPER REMOVAL/INSTALLATION

E6U091050000W04

Disconnect the negative battery cable.
3. Remove the rear combination light. (See 09–18–14 REAR COMBINATION LIGHT REMOVAL/INSTALLATION.)
3. Remove in the order indicated in the table.

1	Fastener A
2	Screw A
3	Fastener B
4	Screw B
5	Fastener C
6	Rear bumper (See 09–10–14 Rear bumper Removal Note) (See 09–10–14 Rear bumper Installation Note)
7	Reflector (See 09–10–14 Reflector Removal Note)

4. Install in the reverse order of removal.

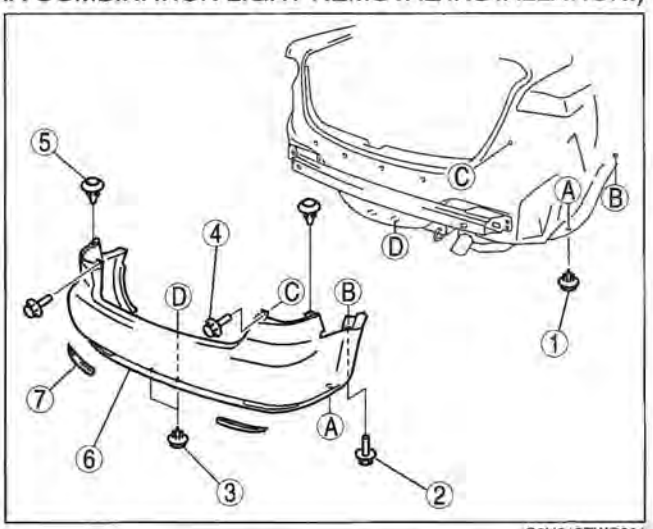

C6U910ZWC001

Rear bumper Removal Note

1. Pull the rear bumper ends (wheel arch) outward to disengage from the bumper slider.

Caution

- **If only one side of the rear bumper is disengaged from the bumper slider and the bumper falls, it could be damaged. When disengaging the rear bumper from the slider, secure the bumper so that it does not fall.**

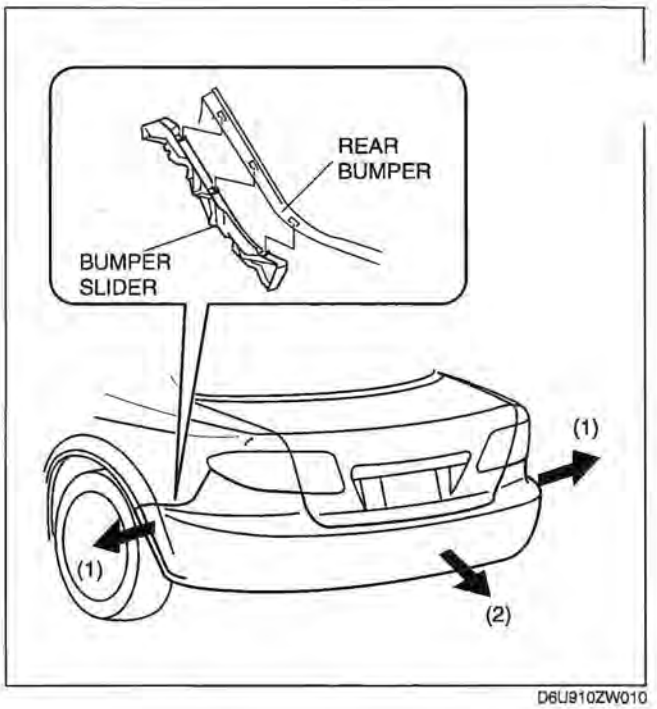

D6U910ZW010

Rear bumper Installation Note

1. Spread the rear bumper ends (wheel arches) apart.
2. Attach the rear bumper to the body.
3. Press the rear bumper connecting area into the body to engage with the bumper slider.

Reflector Removal Note

1. Lift the reflector up in the direction of the arrow, then unhook it from the rear bumper.

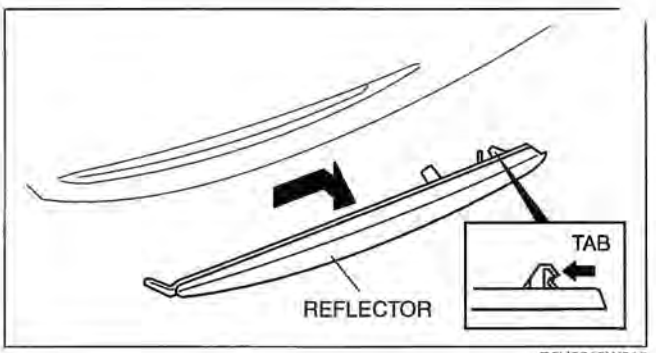

B6U0910W018

REAR BUMPER DISASSEMBLY/ASSEMBLY [L3 WITH TC]

E6U091050000W07

1. Disassemble in the order indicated in the table.
2. Assemble in the reverse order of disassembly.

1	Bumper guard (See 09–10–15 Bumper Guard Removal Note)
2	Reflector (See 09–10–15 Reflector Removal Note)
3	Pipe garnish
4	Rear bumper fascia

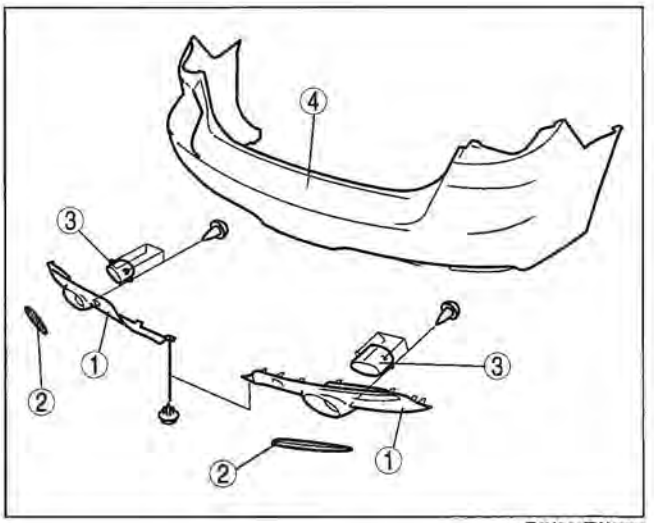

E6U910ZW1009

Bumper Guard Removal Note

1. Detach tabs C and remove the bumper guard.

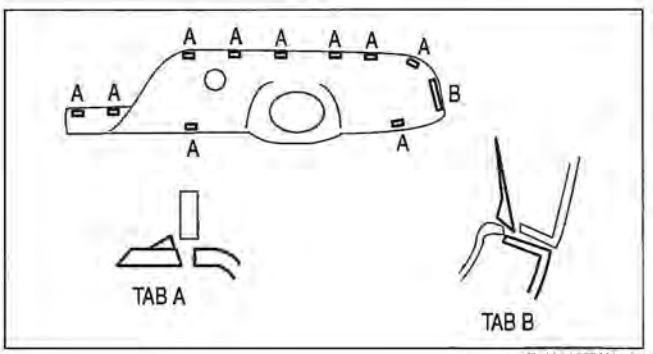

E6U910ZW1010

Reflector Removal Note

1. Lift the reflector up in the direction of the arrow, then unhook it from the rear bumper.

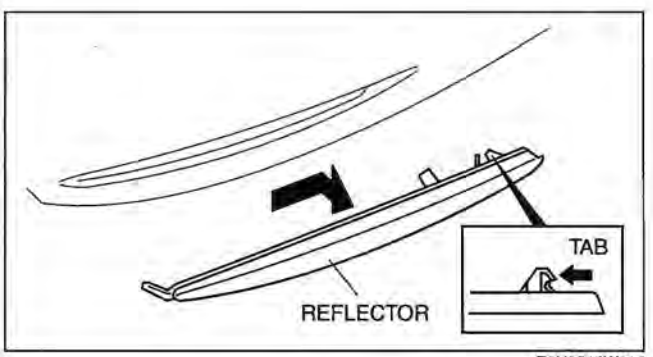

B6U0910W016

REAR BUMPER REINFORCEMENT REMOVAL/INSTALLATION

E6U091050000W05

1. Disconnect the negative battery cable.
2. Remove the trunk side trim. (See 09–17–17 TRUNK SIDE TRIM REMOVAL/INSTALLATION.)
3. Remove the rear combination light. (See 09–18–14 REAR COMBINATION LIGHT REMOVAL/INSTALLATION.)
4. Remove the rear bumper. (See 09–10–13 REAR BUMPER REMOVAL/INSTALLATION.)
5. Remove in the order indicated in the table.

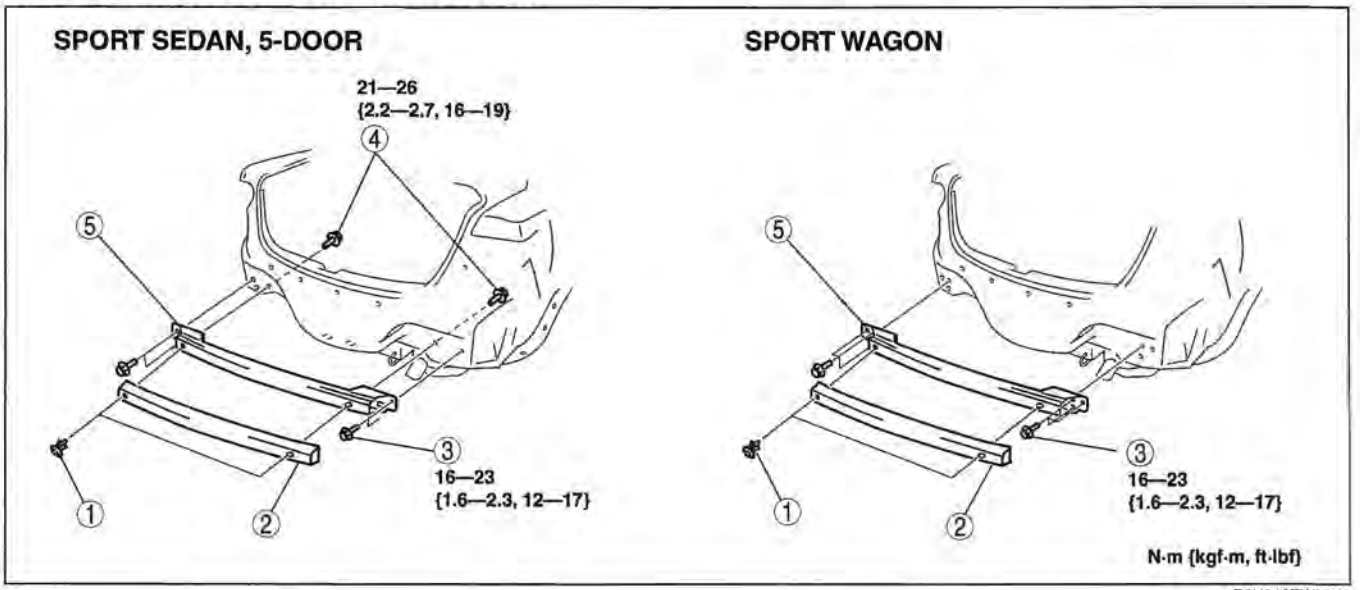

E6U910ZW5001

1	Fastener
2	Rear energy-absorbing foam
3	Bolt A
4	Bolt B
5	Rear bumper reinforcement

6. Install in the reverse order of removal.

FRONT FENDER PANEL REMOVAL/INSTALLATION

E6U091052010W01

1. Disconnect the negative battery cable.
2. Remove the fender molding. (See 09–16–4 COWL GRILLE REMOVAL/INSTALLATION [EXCEPT L3 WITH TC].) (See 09–16–4 COWL GRILLE REMOVAL/INSTALLATION [L3 WITH TC].)
3. Remove the front bumper. (See 09–10–10 FRONT BUMPER REMOVAL/INSTALLATION.)
4. Remove the front combination light. (See 09–18–8 FRONT COMBINATION LIGHT REMOVAL/INSTALLATION.)
5. Remove in the order indicated in the table.

1	Front fender panel
2	Seal plate

6. Install in the reverse order of removal.

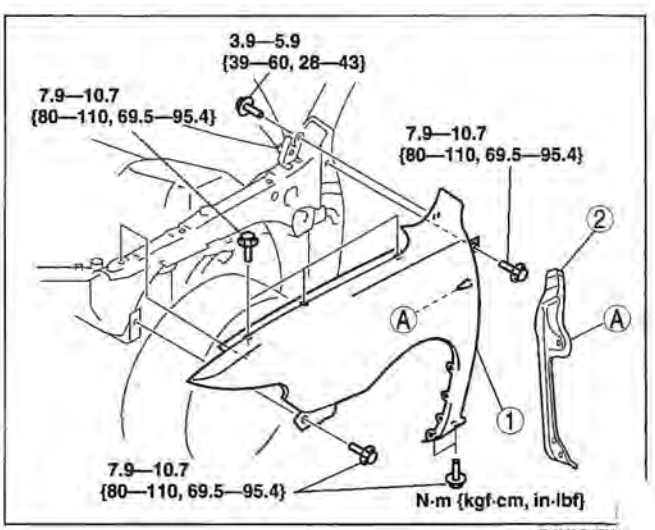

B6U0910W

SHROUD PANEL REMOVAL/INSTALLATION

E6U091053140W01

1. Remove the following parts:
   (1) Hood (See 09–10–3 HOOD REMOVAL/INSTALLATION [EXCEPT L3 WITH TC].) (See 09–10–4 HOOD REMOVAL/INSTALLATION [L3 WITH TC].)
   (2) Front bumper (See 09–10–10 FRONT BUMPER REMOVAL/INSTALLATION.)
   (3) Front combination light (See 09–18–8 FRONT COMBINATION LIGHT REMOVAL/INSTALLATION.)
   (4) Front bumper reinforcement (See 09–10–13 FRONT BUMPER REINFORCEMENT REMOVAL/INSTALLATION.)
2. Remove in the order indicated in the table.

1	Radiator mount cover
2	Radiator mount rubber
3	Bolt
4	Shroud panel

3. Install in the reverse order of removal.

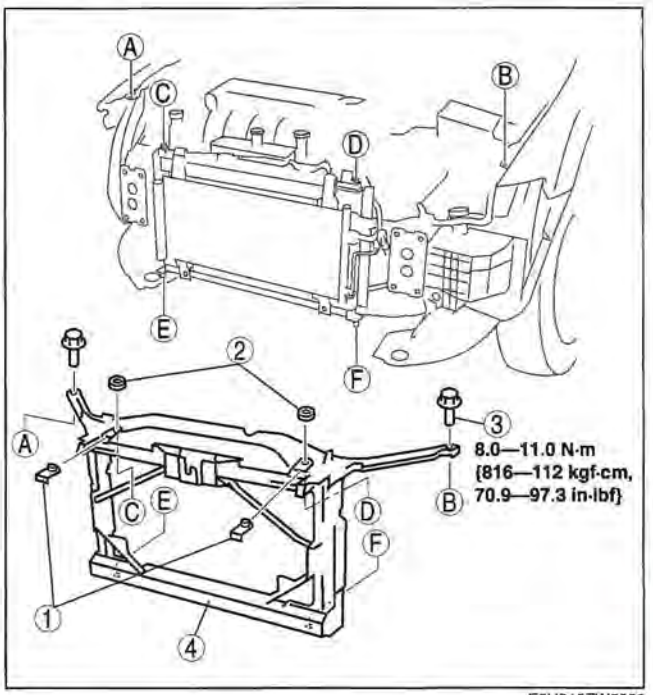

E6U910ZW5002

COWL PANEL REMOVAL/INSTALLATION

E6U091053580W01

1. Remove the windshield wiper arm and blade. (See 09–19–4 WINDSHIELD WIPER ARM AND BLADE REMOVAL/INSTALLATION.)
2. Remove the cowl grille. (See 09–16–4 COWL GRILLE REMOVAL/INSTALLATION [EXCEPT L3 WITH TC].) (See 09–16–4 COWL GRILLE REMOVAL/INSTALLATION [L3 WITH TC].)
3. Remove the windshield wiper motor. (See 09–19–5 WINDSHIELD WIPER MOTOR REMOVAL/INSTALLATION.)
4. Remove in the order indicated in the table.

1	Gusset
2	Cowl panel

5. Install in the reverse order of removal.

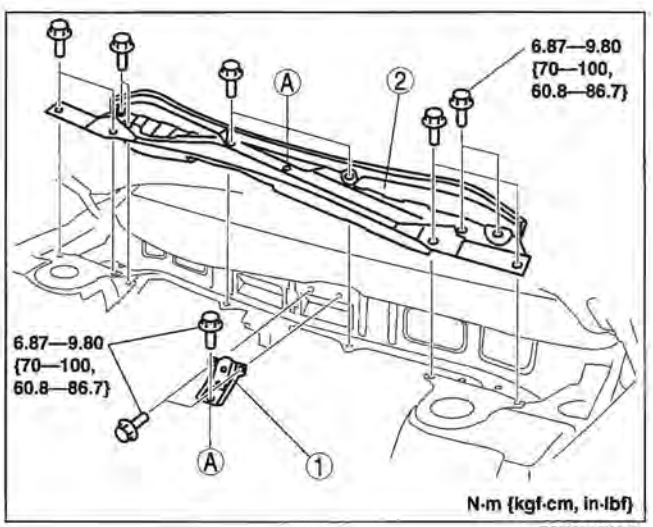

B6U0910W007

09–11 DOORS AND LIFTGATE

LOCATION INDEX..... 09–11–1
FRONT DOOR
REMOVAL/INSTALLATION..... 09–11–2
Connector Removal Note..... 09–11–2
REAR DOOR
REMOVAL/INSTALLATION..... 09–11–2
DOOR ADJUSTMENT..... 09–11–3
FRONT DOOR UNIT
REMOVAL/INSTALLATION..... 09–11–4
REAR DOOR UNIT
REMOVAL/INSTALLATION.....09–11–4
LIFTGATEREMOVAL/INSTALLATION
[5-DOOR] 09–11–5
LIFTGATE REMOVAL/INSTALLATION
[SPORT WAGON].....09–11–6
LIFTGATE ADJUSTMENT
[5-DOOR] 09–11–8
LIFTGATE ADJUSTMENT
[SPORT WAGON].....09–11–8
STAY DAMPER DISPOSAL 09–11–8

LOCATION INDEX

E6U091158010W01

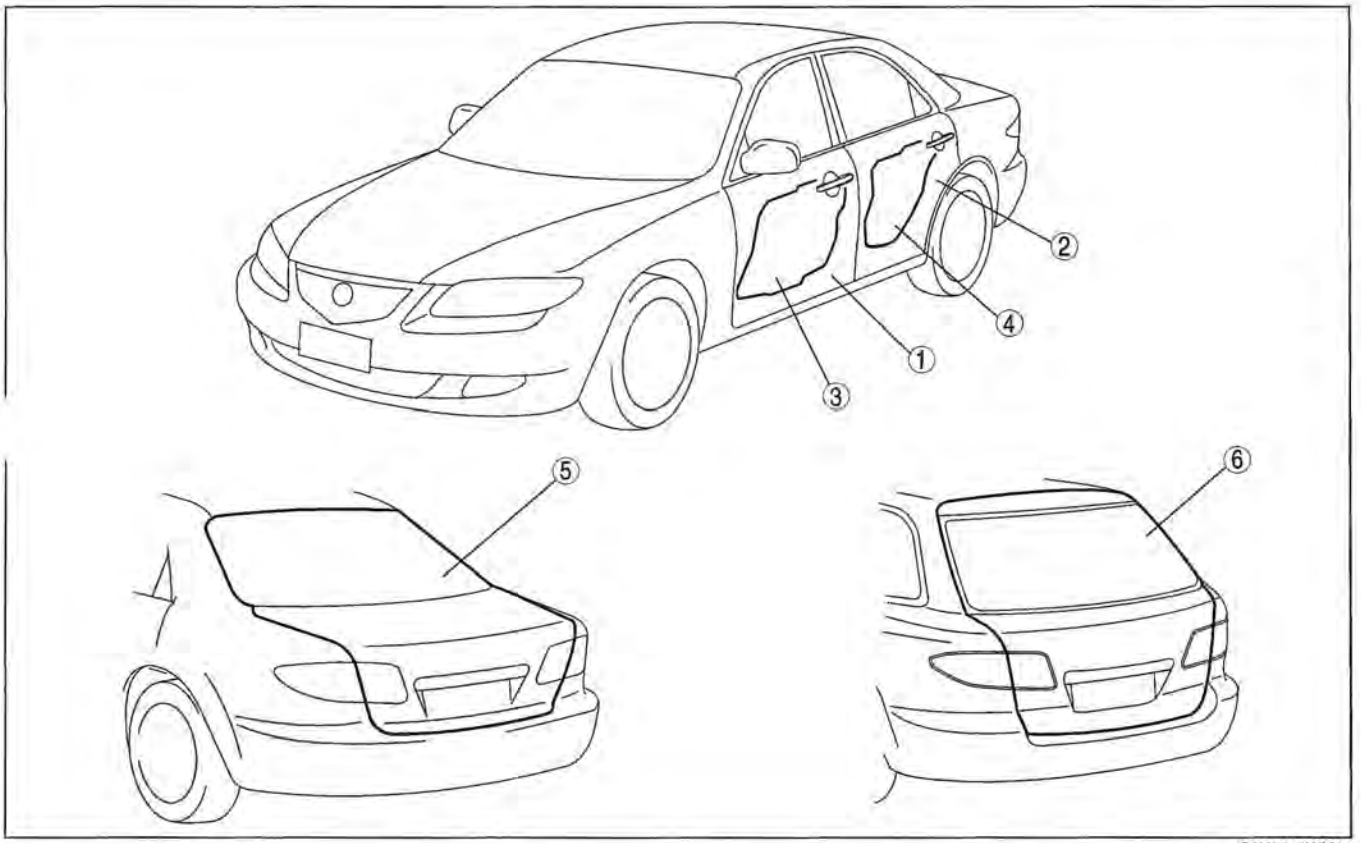

C6U0911WM01

1	Front door (See 09–11–2 FRONT DOOR REMOVAL/ INSTALLATION.) (See 09–11–3 DOOR ADJUSTMENT.)
2	Rear door (See 09–11–2 REAR DOOR REMOVAL/ INSTALLATION.) (See 09–11–3 DOOR ADJUSTMENT.)
3	Front door unit (See 09–11–4 FRONT DOOR UNIT REMOVAL/ INSTALLATION.)

4	Rear door unit (See 09–11–4 REAR DOOR UNIT REMOVAL/ INSTALLATION.)
5	Liftgate [5-Door] (See 09–11–5 LIFTGATE REMOVAL/ INSTALLATION [5-DOOR].) (See 09–11–8 LIFTGATE ADJUSTMENT [5-DOOR].)
6	Liftgate [Sport Wagon] (See 09–11–6 LIFTGATE REMOVAL/ INSTALLATION [SPORT WAGON].) (See 09–11–8 LIFTGATE ADJUSTMENT [SPORT WAGON].)

FRONT DOOR REMOVAL/INSTALLATION

E6U091158010W02

1. Disconnect the negative battery cable.
2. To remove the front door hinge, remove the front fender panel. (See 09–10–16 FRONT FENDER PANEL REMOVAL/INSTALLATION.)
3. To remove the checker, remove the front door speaker. (See 09–20–9 FRONT DOOR SPEAKER REMOVAL/INSTALLATION.)
4. Remove in the order indicated in the table.

1	Connector (See 09–11–2 Connector Removal Note.)
2	Front door hinge
3	Front door
4	Checker

5. Install in the reverse order of removal.
6. Adjust the front door. (See 09–11–3 DOOR ADJUSTMENT.)

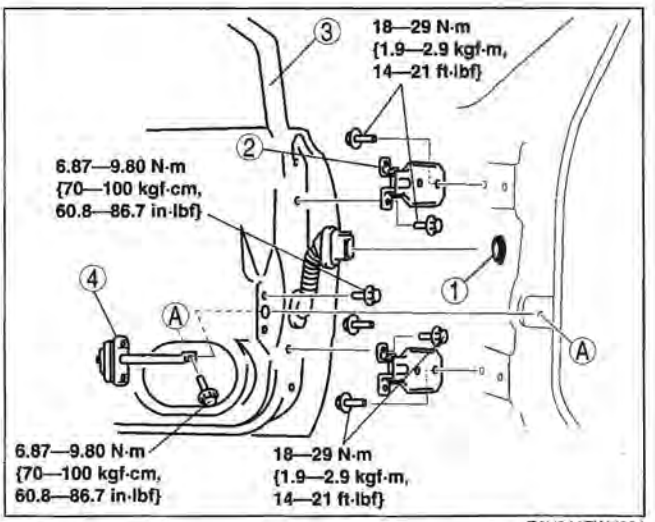

E6U911ZW7001

Connector Removal Note

1. Pull down the cover in the direction of the arrow and disconnect the connector.

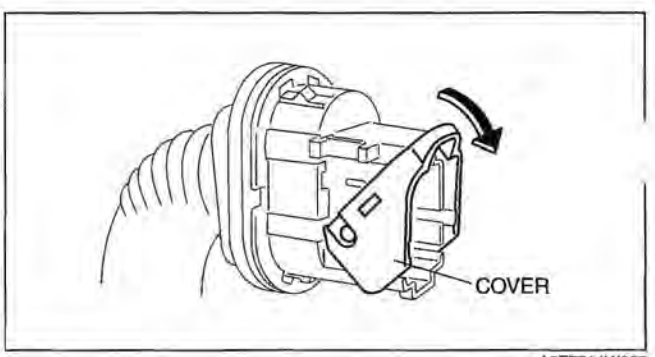

A6E7714W007

REAR DOOR REMOVAL/INSTALLATION

E6U091158010W03

Warning

- **The side air bag sensor is attached to the lower part of the B-pillar. When working around the B-pillar, disconnect the negative battery cable or work carefully, avoiding excessive impact to the lower part of the B-pillar.**

1. Disconnect the negative battery cable.
2. To remove the checker, remove the rear door speaker. (See 09–20–10 REAR DOOR SPEAKER REMOVAL/INSTALLATION.)

3. Remove in the order indicated in the table.

1	Connector
2	Rear door hinge
3	Rear door
4	Checker

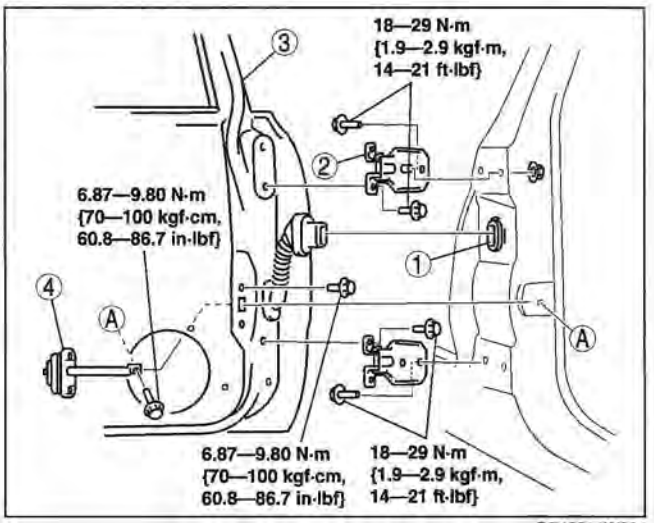

B6U0911W004

4. Install in the reverse order of removal.
5. Adjust the rear door. (See 09–11–3 DOOR ADJUSTMENT.)

DOOR ADJUSTMENT

E6U091158010W04

1. Measure the gap and height difference between the front or rear door and the body.
2. If not as specified, loosen the front or rear door hinge installation bolts or the door lock striker installation screws, and reposition the door.

Clearance
a: 2.5—4.5 mm {0.10—0.18 in}
b: -0.8—1.2 mm {-0.03—0.05 in}
c: -0.3—1.7 mm {-0.01—0.07 in}
d: -1.0—1.0 mm {-0.04—0.04 in}
e: -0.5—1.5 mm {-0.02—0.06 in}

09–11

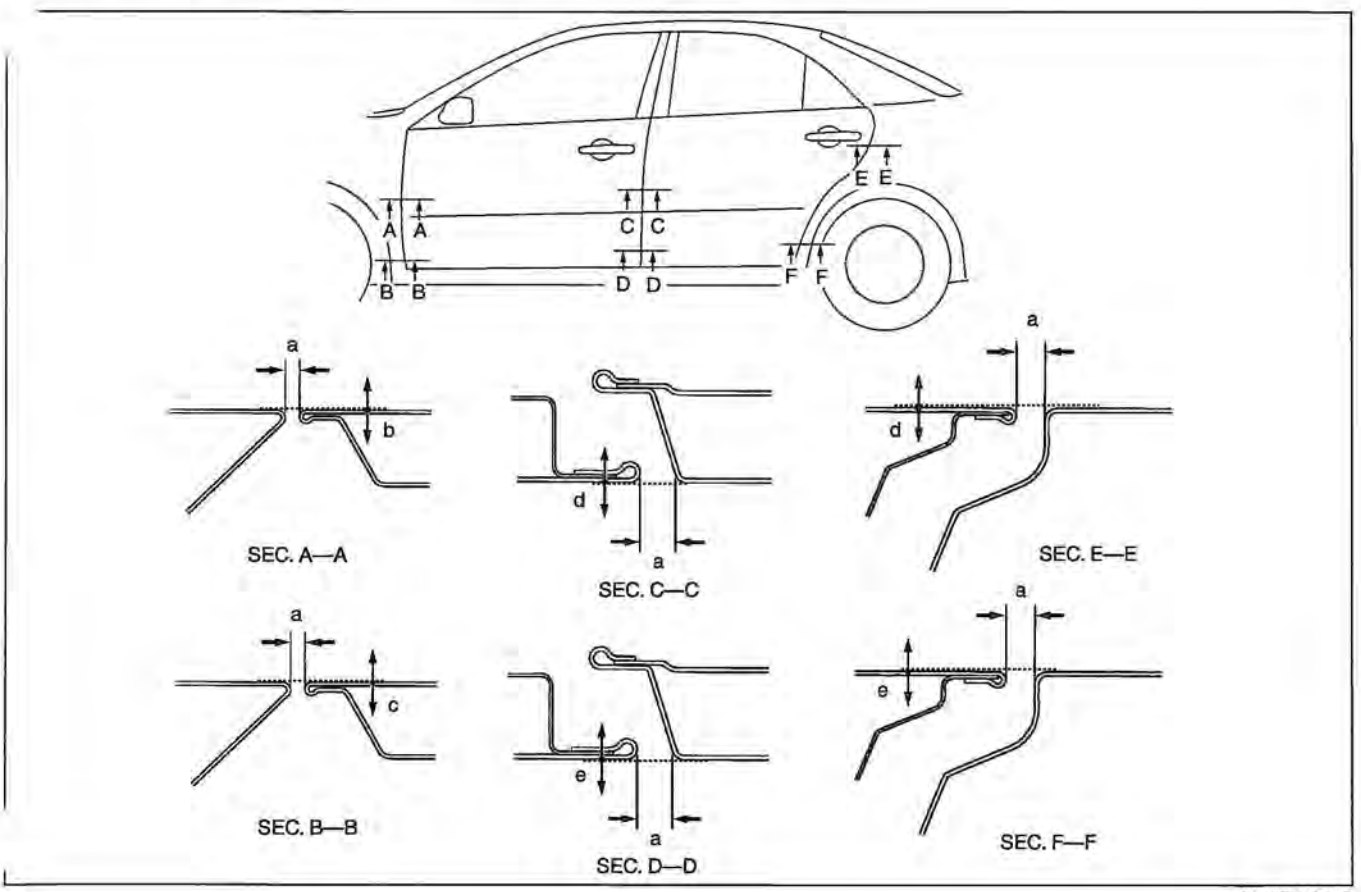

A6E7714W025

3. Tighten the bolts or screws.

FRONT DOOR UNIT REMOVAL/INSTALLATION

E6U091159970W01

1. Remove the front door glass. (See 09–12–3 FRONT DOOR GLASS REMOVAL/INSTALLATION.)
2. Remove the inner handle.
3. Remove the front door speaker. (See 09–20–9 FRONT DOOR SPEAKER REMOVAL/INSTALLATION.)
4. Disconnect the power window motor connector, front door lock actuator connector, and the power outside mirror connector.
5. Remove the front door harness from the front door unit.
6. Remove screws A.
7. Remove the screw B.
8. Remove the front door actuator tab from the front door unit.
9. Pull the front door unit slightly outward, and while keeping the power window regulator from catching on the front door, remove the front door unit from the front door.
10. Pull out the inner handle cable and door lock knob cable from the hole.

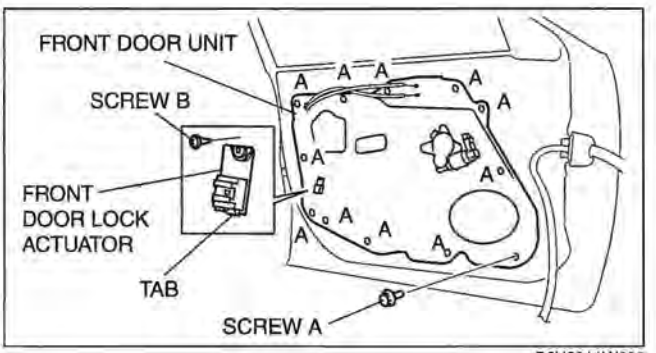

B6U0911W005

11. Remove the power window motor and power window regulator from the front door unit carrier.
12. Install in the reverse order of removal.

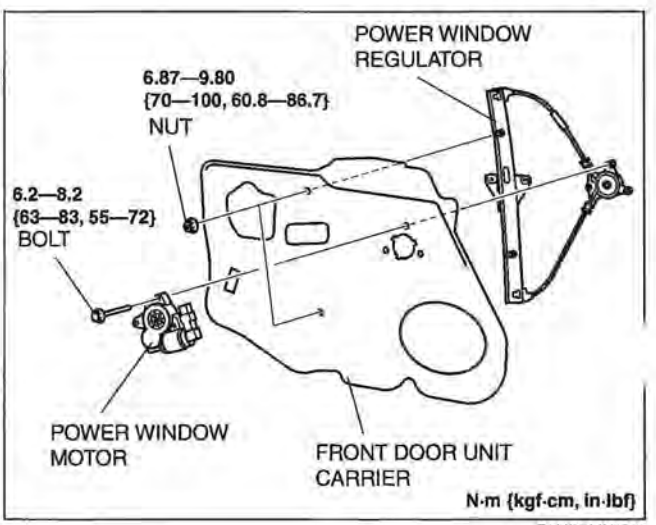

B6U0911W006

REAR DOOR UNIT REMOVAL/INSTALLATION

E6U091159970W02

1. Remove the rear door glass. (See 09–12–3 REAR DOOR GLASS REMOVAL/INSTALLATION.)
2. Remove the inner handle.
3. Remove the rear door speaker. (See 09–20–10 REAR DOOR SPEAKER REMOVAL/INSTALLATION.)
4. Disconnect the power window motor connector and rear door lock actuator connector.
5. Remove the rear door harness from the rear door unit.
6. Remove screws A.
7. Remove the screw B.
8. Remove the rear door lock actuator tab from the rear door unit.
9. Pull the rear door unit slightly outward, and while keeping the power window regulator from catching on the rear door, remove the rear door unit from the rear door.
10. Pull out the inner handle cable and door lock knob cable from the hole.

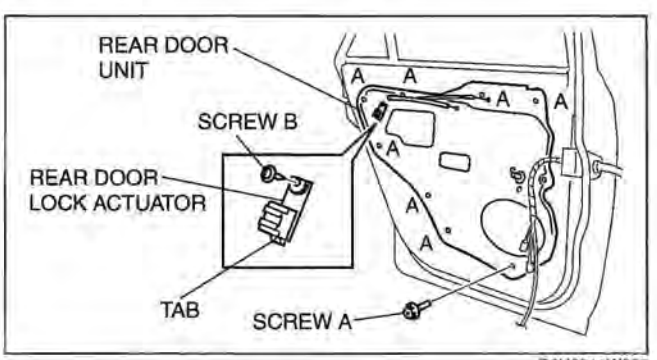

B6U0911W007

11. Remove the power window motor and power window regulator from the rear door unit carrier.
12. Install in the reverse order of removal.

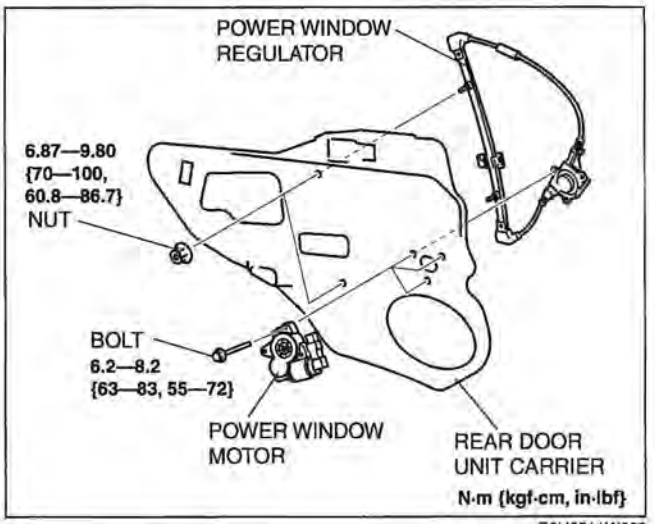

B6U0911W008

LIFTGATE REMOVAL/INSTALLATION [5-DOOR]

E6U091162010W01

Warning

- **Removing the stay damper without supporting the liftgate can be dangerous. The liftgate may fall and injure you. Open the liftgate fully and support it before removing the stay damper.**

1. Disconnect the negative battery cable.
2. Remove the liftgate upper trim. (See 09–17–21 LIFTGATE UPPER TRIM REMOVAL/INSTALLATION [5-DOOR, SPORT WAGON])
3. Remove the liftgate side trim. (See 09–17–22 LIFTGATE SIDE TRIM REMOVAL/INSTALLATION [5-DOOR, SPORT WAGON])
4. Remove the liftgate lower trim. (See 09–17–23 LIFTGATE LOWER TRIM REMOVAL/INSTALLATION [5-DOOR, SPORT WAGON])
   Press the liftgate harness connector's bracket, which is attached to the liftgate, to the (1) direction shown in the figure, and then detach the fit. Then remove the connector toward the (2) direction shown in the figure.
6. Disconnect the vehicle harness connector and the liftgate connector. Then remove the grommet from the liftgate.

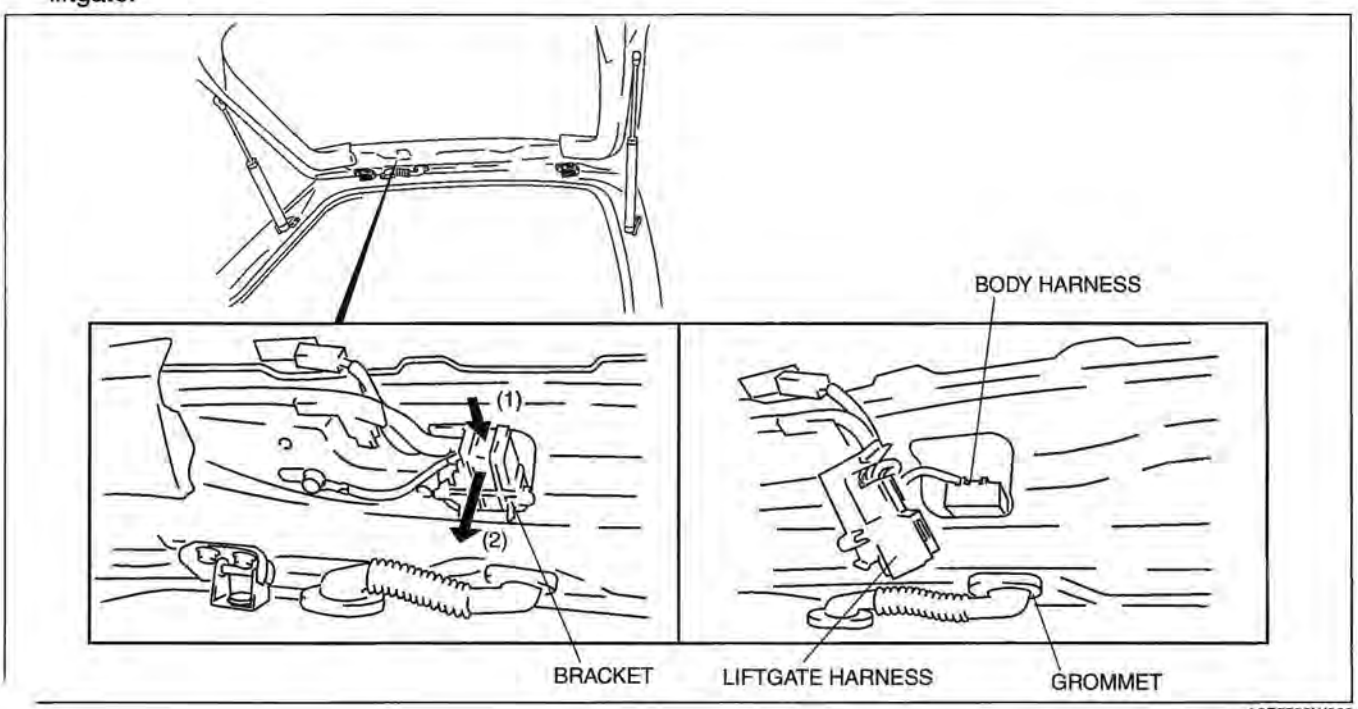

A6E7722W003

7. Pry away the stay damper's band with a screwdriver.
8. Pry out the connecting part of the stay damper and the hinge with a screwdriver to disconnect them. Then remove the stay damper.
9. Remove the bolts A, then remove the liftgate.
10. To remove the hinge, remove the headliner and the nut.

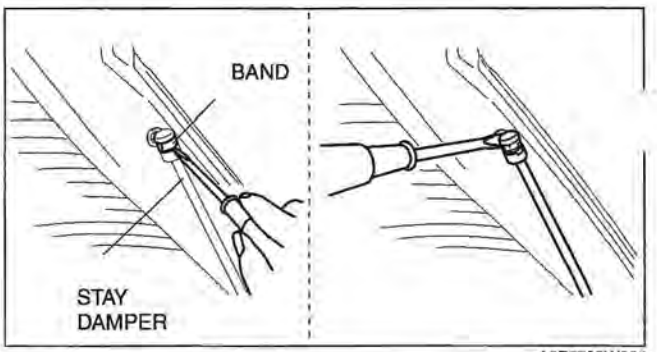

A6E7722W005

11. To remove the stay damper, remove the bolt B.

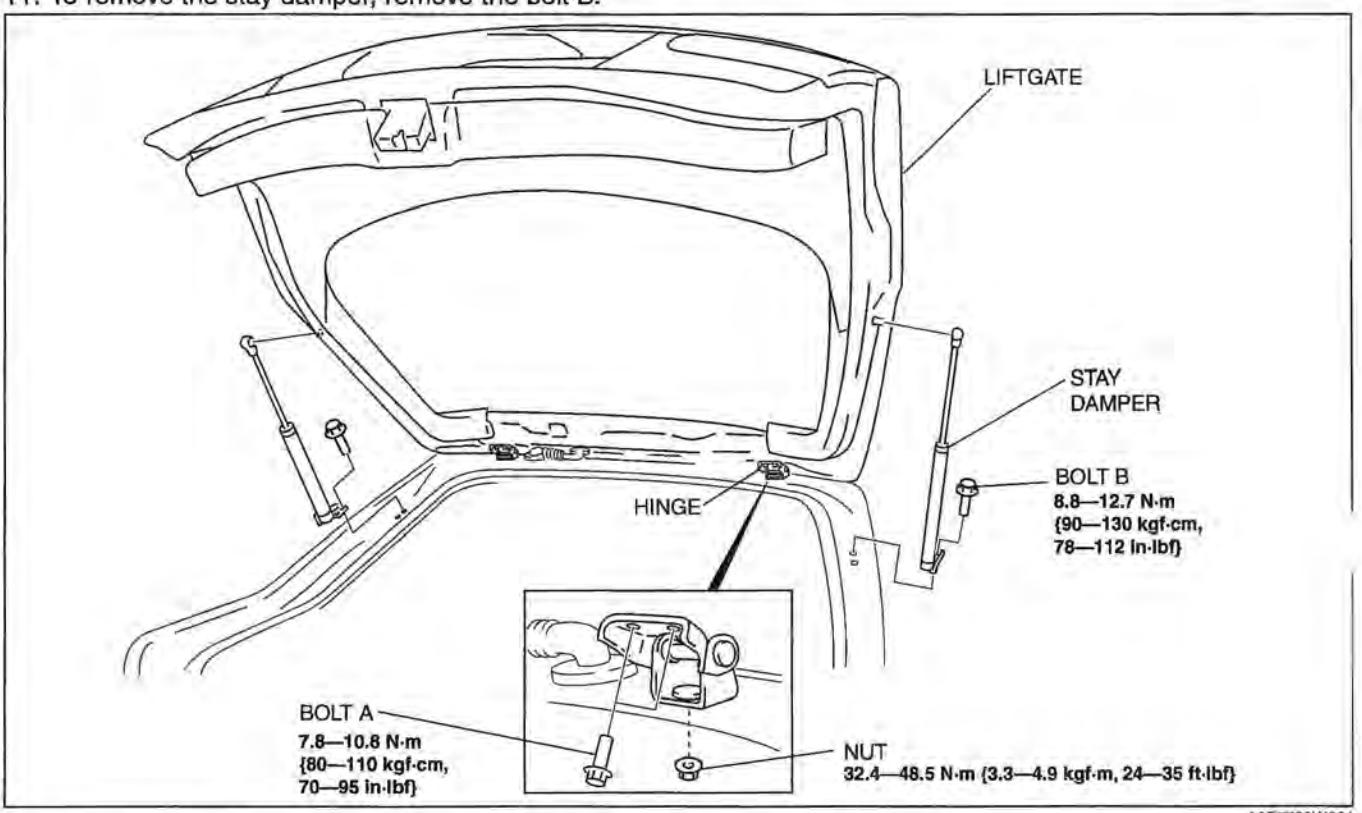

A6E7722W001

12. Install in the reverse order of removal.

LIFTGATE REMOVAL/INSTALLATION [SPORT WAGON]

E6U091162010W02

Warning

- **Removing the stay damper without supporting the liftgate can be dangerous. The liftgate may fall and injure you. Open the liftgate fully and support it before removing the stay damper.**

1. Disconnect the negative battery cable.
2. Remove the liftgate upper trim. (See 09–17–21 LIFTGATE UPPER TRIM REMOVAL/INSTALLATION [5-DOOR, SPORT WAGON])
3. Remove the liftgate side trim. (See 09–17–22 LIFTGATE SIDE TRIM REMOVAL/INSTALLATION [5-DOOR, SPORT WAGON])
4. Remove the liftgate lower trim. (See 09–17–23 LIFTGATE LOWER TRIM REMOVAL/INSTALLATION [5-DOOR, SPORT WAGON])
5. Disconnect the rear washer hose.

6. Disconnect the vehicle harness and the vehicle harness connector, attached to the liftgate, from the liftgate harness connector.

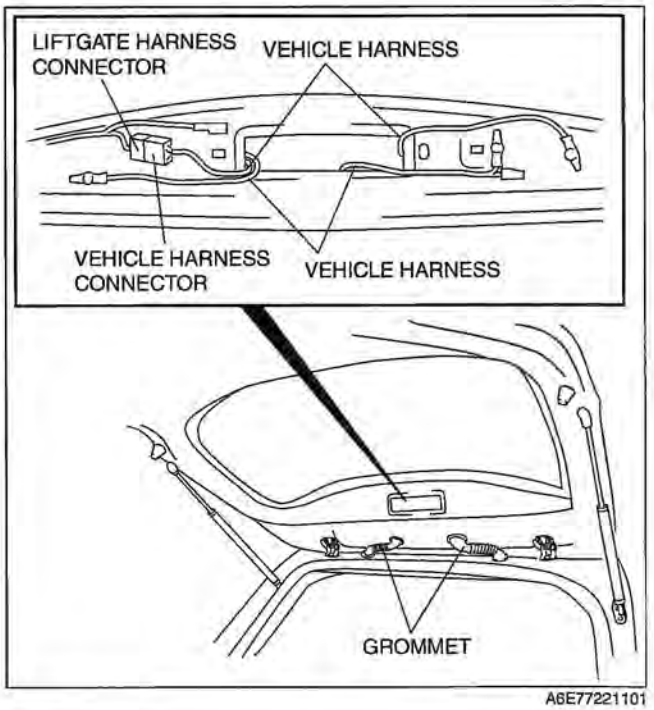

A6E77221101

7. Pry away the stay damper's band with a screwdriver.
8. Pry out the connecting part of the stay damper and the hinge with a screwdriver to disconnect them. Then remove the stay damper.
9. Remove the bolts A, then remove the liftgate.
10. To remove the hinge, remove the headliner and the nut.

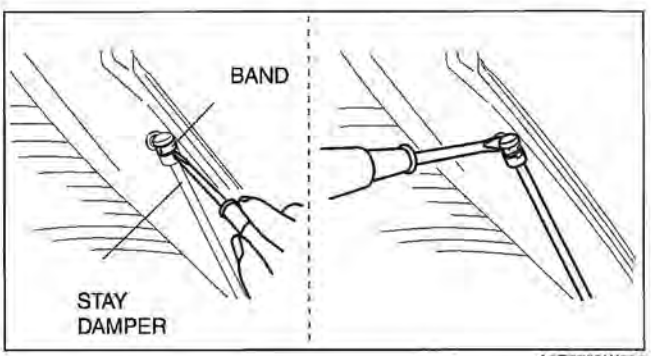

A6E7722W005

11. To remove the stay damper, remove the bolt B.
12. Install in the reverse order of removal.

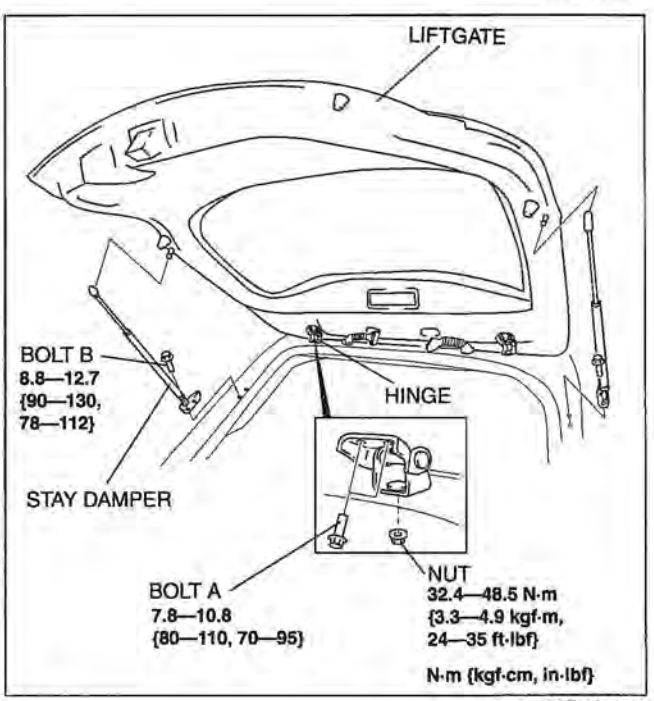

A6E77221102

LIFTGATE ADJUSTMENT [5-DOOR]

E6U091162010W03

1. Measure the gap and height between the liftgate and the body.
2. If not as specified, loosen the liftgate hinge installation bolts or the liftgate striker installation screws, and reposition the liftgate.

Clearance
a: 3.0—7.0 mm {0.12—0.28 in}
b: -1.0—3.4 mm {-0.04—013 in}
c: 2.8—5.2 mm {0.11—0.24 in}
d: -1.2—1.2 mm {0.05—0.05 in}
e: 2.8—5.8 mm {0.11—0.22 in}
f:4.0—8.0 mm {0.16—0.31 in}

3. Tighten the bolts or screws.

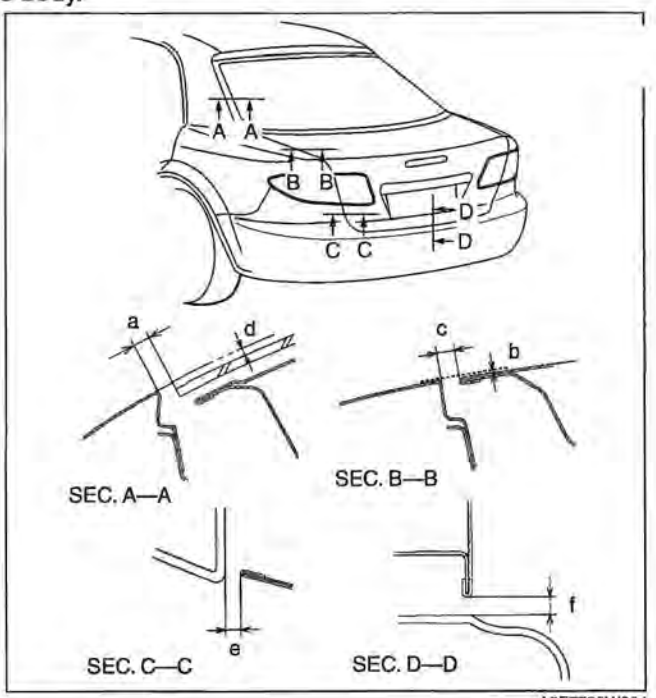

A6E7722W004

LIFTGATE ADJUSTMENT [SPORT WAGON]

E6U091162010W04

1. Measure the gap and height between the liftgate and the body.
2. If not as specified, loosen the liftgate hinge installation bolts or the liftgate striker installation screws, and reposition the liftgate.

Clearance
a: 0—2.0 mm {0—0.07 in}
b: 4.8—6.8 mm {0.19—0.26 in}
c: 3.5—7.5 mm {0.14—0.29 in}
d: 1.2—3.2 mm {0.05—0.12 in}
e: 2.8—5.2 mm {0.11—0.20 in}
f: -0.7—1.7 mm {-0.02—0.06 in}
g: 2.3—5.7 mm {0.10—0.22 in}
h: 4.0—8.0 mm {0.16—0.31 in}

3. Tighten the bolts or screws.

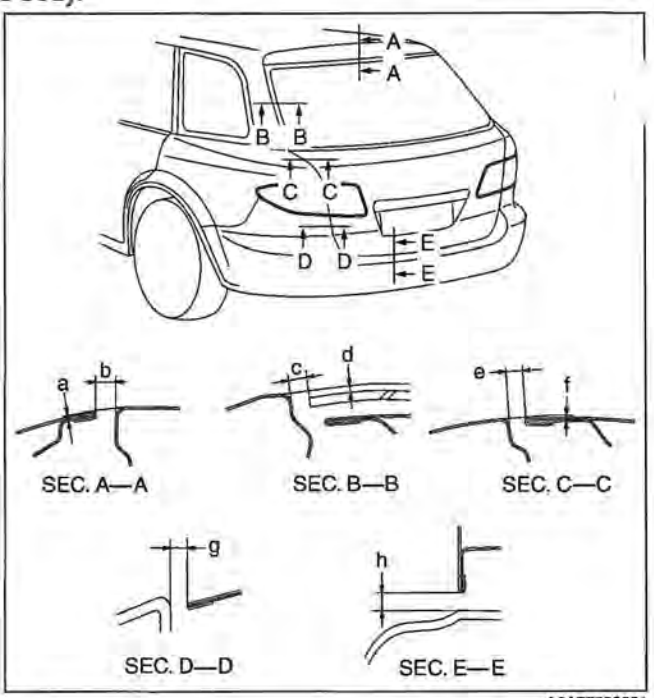

A6A77222001

STAY DAMPER DISPOSAL

E6U091162010W05

1. Referring to procedures for trunk lid stay damper disposal, dispose of the liftgate stay damper.

09–12 GLASS/WINDOWS/MIRRORS

LOCATION INDEX 09–12–2
FRONT DOOR GLASS REMOVAL/INSTALLATION 09–12–3
REAR DOOR GLASS REMOVAL/INSTALLATION 09–12–3
REAR DOOR QUARTER GLASS REMOVAL/INSTALLATION 09–12–4
POWER WINDOW REGULATOR REMOVAL/INSTALLATION 09–12–4
POWER WINDOW MOTOR REMOVAL/INSTALLATION 09–12–5
POWER WINDOW MOTOR INSPECTION 09–12–6
Driver's Side and Passenger's Side 09–12–6
Rear Side 09–12–6
POWER WINDOW SWITCH REMOVAL/INSTALLATION 09–12–6
POWER WINDOW MAIN SWITCH INSPECTION 09–12–7
Driver's Side 09–12–7
Rear Side 09–12–9
POWER WINDOW SUBSWITCH INSPECTION 09–12–9
Passenger's Side 09–12–9
Rear Side 09–12–10
POWER WINDOW INITIALIZATION PROCEDURE 09–12–11
TWO-STEP DOWN FUNCTION OPERATIVE/NON-OPERATIVE SWITCHING PROCEDURE 09–12–11
DOOR GLASS POSITION CHANGE PROCEDURE 09–12–12
WINDSHIELD REMOVAL 09–12–13
Not Reusing Windshield 09–12–13
Reusing Windshield 09–12–13
WINDSHIELD INSTALLATION 09–12–14
REAR WINDOW GLASS REMOVAL 09–12–16
Not Reusing Rear Window Glass 09–12–17
Reusing Rear Window Glass 09–12–18
REAR WINDOW GLASS INSTALLATION 09–12–19
QUARTER WINDOW GLASS REMOVAL [SPORT WAGON] 09–12–23
QUARTER WINDOW GLASS INSTALLATION [SPORT WAGON] 09–12–23
FILAMENT REPAIR 09–12–25
FILAMENT INSPECTION 09–12–25
POWER OUTER MIRROR REMOVAL/INSTALLATION 09–12–26
POWER OUTER MIRROR DISASSEMBLY/ASSEMBLY 09–12–26
Outer Mirror Glass Disassembly Note 09–12–26
Cover Disassembly Note 09–12–27
Outer Mirror Glass Assembly Note 09–12–27
POWER OUTER MIRROR INSPECTION 09–12–27
POWER OUTER MIRROR SWITCH REMOVAL/INSTALLATION 09–12–28
POWER OUTER MIRROR SWITCH INSPECTION 09–12–28
REARVIEW MIRROR REMOVAL/INSTALLATION 09–12–29
Auto-dimming Mirror 09–12–29
Normal Type 09–12–29
AUTO-DIMMING MIRROR INSPECTION 09–12–30
Terminal Voltage Table (Reference) 09–12–30
BASE REMOVAL 09–12–30
BASE INSTALLATION 09–12–31

09–12

LOCATION INDEX

E6U091200001W01

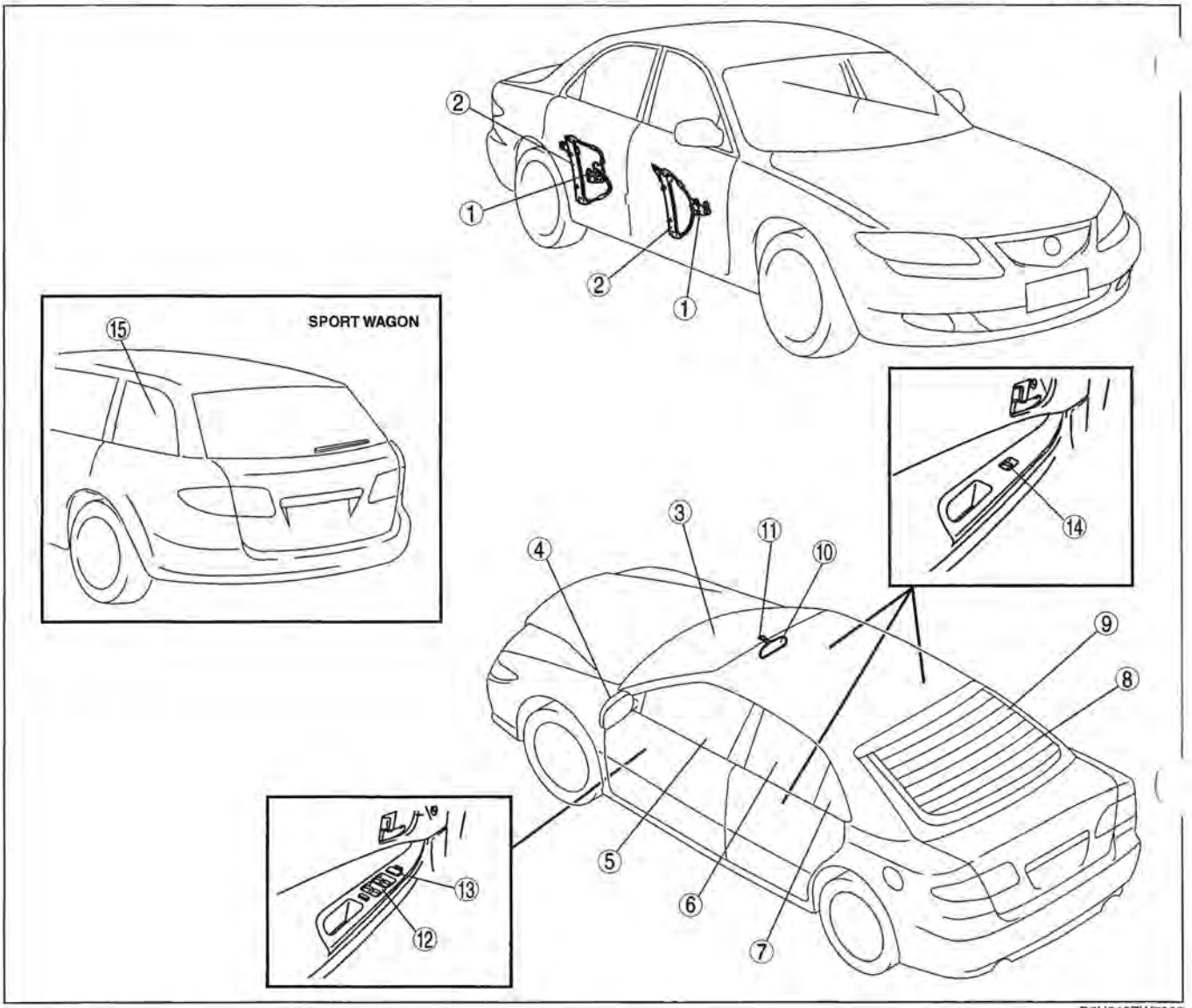

D6U912ZW7002

1	Power window motor (See 09–12–5 POWER WINDOW MOTOR REMOVAL/INSTALLATION.) (See 09–12–6 POWER WINDOW MOTOR INSPECTION.)
2	Power window regulator (See 09–12–4 POWER WINDOW REGULATOR REMOVAL/INSTALLATION.)
3	Windshield (See 09–12–13 WINDSHIELD REMOVAL.) (See 09–12–14 WINDSHIELD INSTALLATION.)
4	Power outer mirror (See 09–12–26 POWER OUTER MIRROR REMOVAL/INSTALLATION.) (See 09–12–26 POWER OUTER MIRROR DISASSEMBLY/ASSEMBLY.) (See 09–12–27 POWER OUTER MIRROR INSPECTION.)
5	Front door glass (See 09–12–3 FRONT DOOR GLASS REMOVAL/INSTALLATION.)
6	Rear door glass (See 09–12–3 REAR DOOR GLASS REMOVAL/INSTALLATION.)
7	Rear door quarter glass (See 09–12–4 REAR DOOR QUARTER GLASS REMOVAL/INSTALLATION.)
8	Filament (See 09–12–25 FILAMENT INSPECTION.) (See 09–12–25 FILAMENT REPAIR.)
9	Rear window glass (See 09–12–16 REAR WINDOW GLASS REMOVAL.) (See 09–12–19 REAR WINDOW GLASS INSTALLATION.)
10	Rearview mirror (See 09–12–29 REARVIEW MIRROR REMOVAL/INSTALLATION.) (See 09–12–30 AUTO-DIMMING MIRROR INSPECTION.)
11	Base (See 09–12–30 BASE REMOVAL.) (See 09–12–31 BASE INSTALLATION.)

12	Power window main switch (See 09–12–6 POWER WINDOW SWITCH REMOVAL/INSTALLATION.) (See 09–12–7 POWER WINDOW MAIN SWITCH INSPECTION.)
13	Power outer mirror switch (See 09–12–28 POWER OUTER MIRROR SWITCH REMOVAL/INSTALLATION.) (See 09–12–28 POWER OUTER MIRROR SWITCH INSPECTION.)

14	Power window subswitch (See 09–12–6 POWER WINDOW SWITCH REMOVAL/INSTALLATION.) (See 09–12–9 POWER WINDOW SUBSWITCH INSPECTION.)
15	Quarter window glass (See 09–12–23 QUARTER WINDOW GLASS REMOVAL [SPORT WAGON].) (See 09–12–23 QUARTER WINDOW GLASS INSTALLATION [SPORT WAGON].)

FRONT DOOR GLASS REMOVAL/INSTALLATION

1. Operate the front door glass so that the distance from the top of the front door glass to the upper part of the front beltline molding is **210 mm {8.3 in}**.
2. Remove the front door trim. (See 09–17–12 FRONT DOOR TRIM REMOVAL/INSTALLATION.)
3. Remove the hole cover.

E6U091259500W01

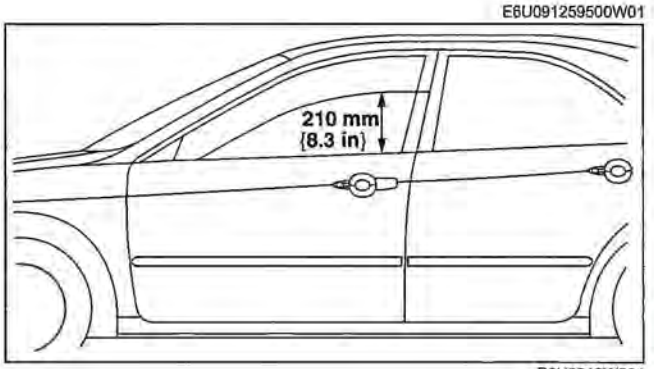

B6U0912W001

4. Remove the screws.
   Lift out the front door glass.
5. Install in the reverse order of removal.

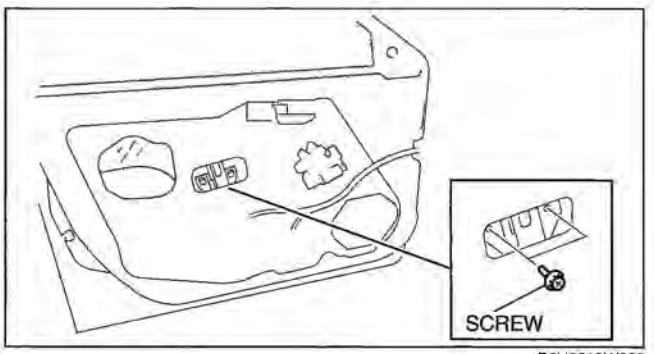

B6U0912W009

REAR DOOR GLASS REMOVAL/INSTALLATION

E6U091259500W02

1. Fully roll down the rear door glass.
2. Remove the rear door trim. (See 09–17–13 REAR DOOR TRIM REMOVAL/INSTALLATION.)
3. Remove the hole cover.
4. Pull up the rear door weatherstrip and remove the screw.
5. Remove the bolt.

6. Remove the glass run channel from the rear door glass guide.

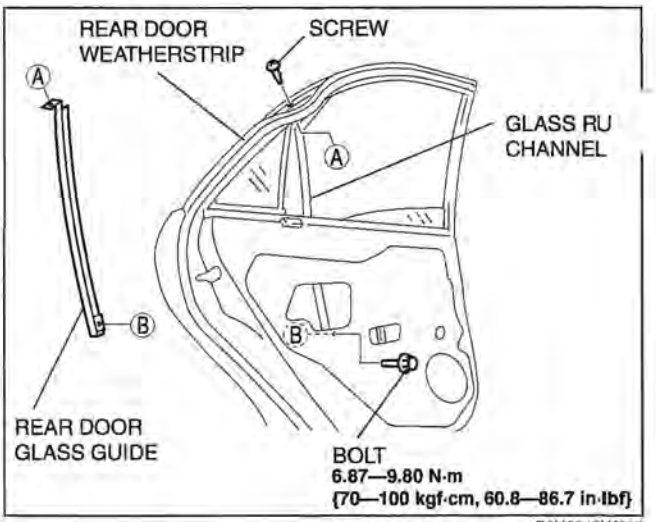

B6U0912W010

7. Lift the rear door glass to the position where the rear door glass installation screw is visible.
8. Remove the screw.
9. Lift out the rear door glass.
10. Install in the reverse order of removal.

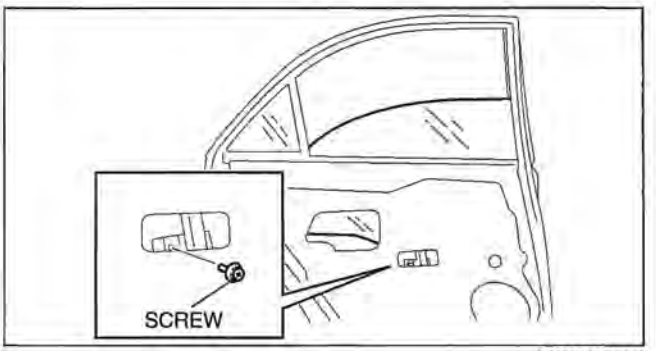

B6U0912W011

REAR DOOR QUARTER GLASS REMOVAL/INSTALLATION

E6U091259500v

1. Remove the rear door trim. (See 09–17–13 REAR DOOR TRIM REMOVAL/INSTALLATION.)
2. Remove the screw and bolt, then remove the rear door glass guide.
3. Remove the rear door quarter glass and the molding as a signal unit.
4. Remove the rear door quarter glass molding from the glass.
5. Install in the reverse order of removal.

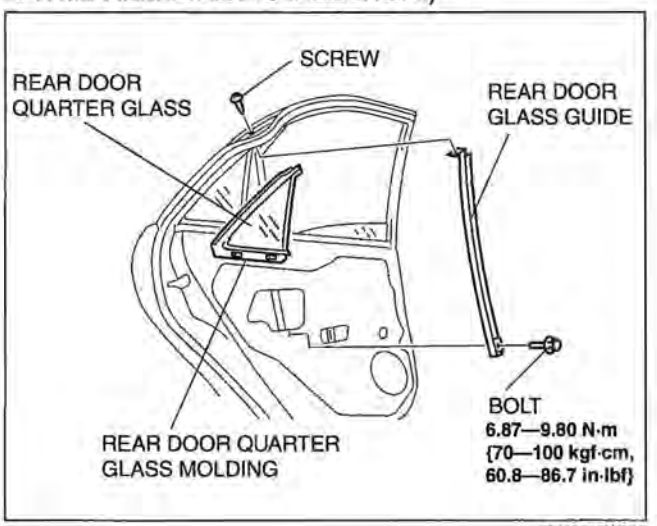

B6U0912W017

POWER WINDOW REGULATOR REMOVAL/INSTALLATION

E6U091258560W01

1. Disconnect the negative battery cable.
2. Remove the front door glass or rear door glass. (See 09–12–3 FRONT DOOR GLASS REMOVAL/INSTALLATION.) (See 09–12–3 REAR DOOR GLASS REMOVAL/INSTALLATION.)
3. Remove the front door speaker or rear door speaker. (See 09–20–9 FRONT DOOR SPEAKER REMOVAL/INSTALLATION.) (See 09–20–10 REAR DOOR SPEAKER REMOVAL/INSTALLATION.)
4. Remove the power window motor. (See 09–12–5 POWER WINDOW MOTOR REMOVAL/INSTALLATION.)

5. Remove the nuts.

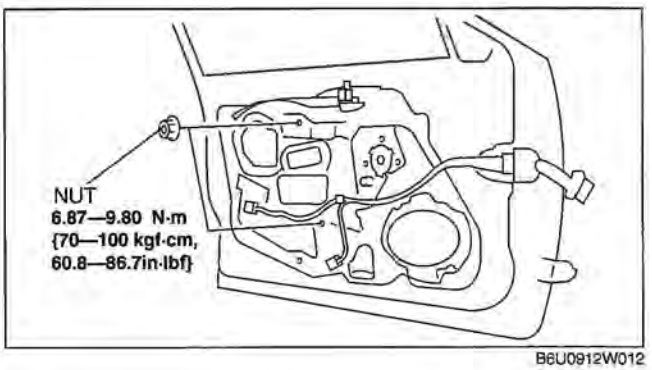

B6U0912W012

6. Insert hand through the speaker installation hole, rotate the regulator drum housing in the direction shown in the figure, and disengage the regulator drum housing from the door unit connection tabs.

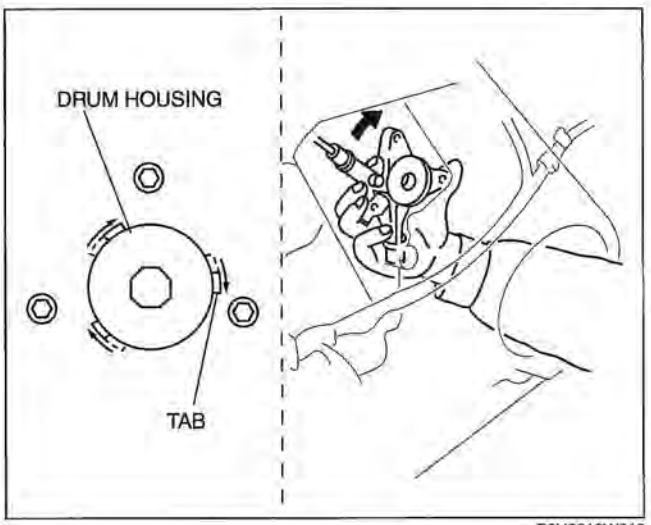

B6U0912W013

Remove the power window regulator from the speaker installation hole.

8. Install in the reverse order of removal.

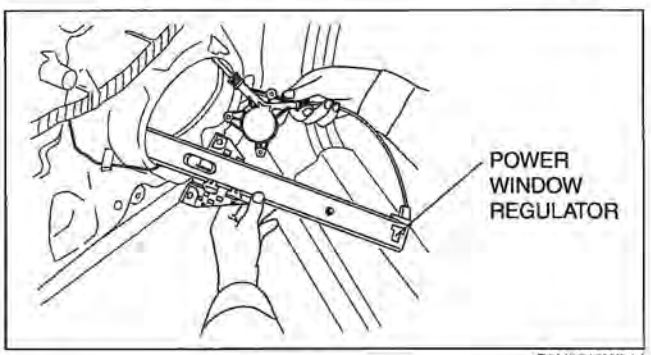

B6U0912W014

POWER WINDOW MOTOR REMOVAL/INSTALLATION

E6U091258560W02

1. Disconnect the negative battery cable.
2. Remove the front door trim or rear door trim. (See 09–17–12 FRONT DOOR TRIM REMOVAL/INSTALLATION.) (See 09–17–13 REAR DOOR TRIM REMOVAL/INSTALLATION.)
3. Disconnect the power window motor connector.
4. Remove the bolts.
5. Remove the power window motor from the power window regulator drum.
6. Install in the reverse order of removal.

Note

- When installing the power window motor to the power window regulator drum, the drum housing hook may come off the door unit. If this happens, remove the door speaker, insert your hand in the speaker installation hole, connect the drum housing hooks, and while supporting the drum housing, install the power window motor to the drum.

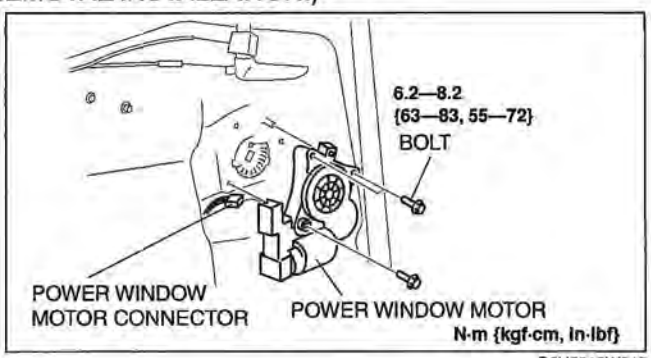

B6U0912W015

POWER WINDOW MOTOR INSPECTION

E6U091258560W03

Driver's Side and Passenger's Side

1. Disconnect the power window motor connector.
2. Apply battery positive voltage to the power window motor terminals E and F and inspect the operation the power window motor operation.
   - If there is any malfunction, replace the power window motor.

Motor operation	Terminal	
	F	E
UP	GND	B+
DOWN	B+	GND

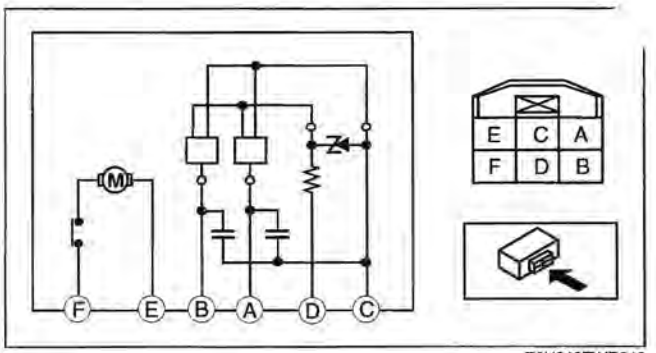

E6U912ZWB019

3. Apply **battery positive voltage** to the power window motor terminal D and connect terminal C to ground.
4. Measure the voltage at terminal B and A while performing Step 3.
   - If there is any malfunction, replace the power window motor.

Voltage
Pulse wave: MAX. 5 V, MIN. 0 V

Rear Side

1. Apply battery positive voltage to the power window motor terminals and inspect the power window motor operation.
   - If there is any malfunction, replace the power window motor.

Motor operation	Terminal	
	F	E
UP	GND	B+
DOWN	B+	GND

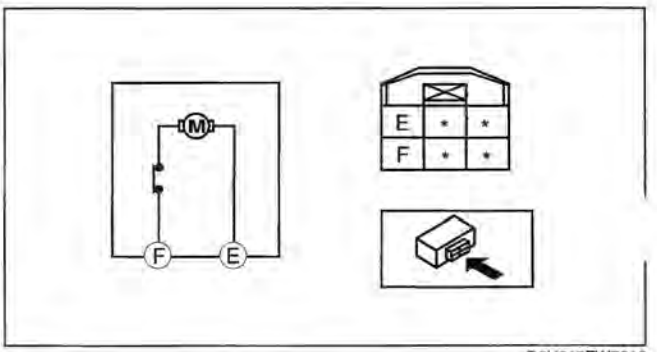

D6U912ZW7010

POWER WINDOW SWITCH REMOVAL/INSTALLATION

E6U091266330W01

1. Disconnect the negative battery cable.
2. Remove the front door trim or rear door trim. (See 09–17–12 FRONT DOOR TRIM REMOVAL/INSTALLATION.) (See 09–17–13 REAR DOOR TRIM REMOVAL/INSTALLATION.)
3. Remove the screws, then the power window switch.
4. Install in the reverse order of removal.

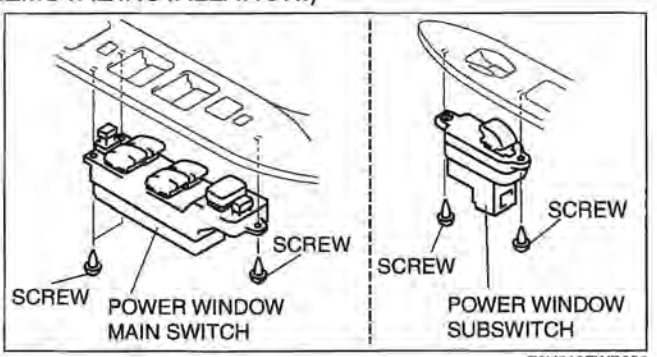

E6U912ZWB002

POWER WINDOW MAIN SWITCH INSPECTION

E6U091266330W02

Note
- Before proceeding with diagnosis of malfunctioning power windows, ensure the POWER WINDOW INITIALIZATION PROCEDURE has been performed.

Driver's Side

1. Measure the voltage at each terminal (other than terminals 1M and 2A).
   - If the voltage is not as specified in the Terminal Voltage Table, inspect the parts under "Inspection item(s)" and related wiring harnesses.
2. Disconnect the negative battery cable.
3. Inspect the power window main switch connector for continuity at terminal 1M and 2A.
4. If the system does not work properly even though the inspection items or related wiring harnesses do not have any malfunction, replace the power window main switch.

POWER WINDOW MAIN SWITCH HARNESS-SIDE CONNECTOR

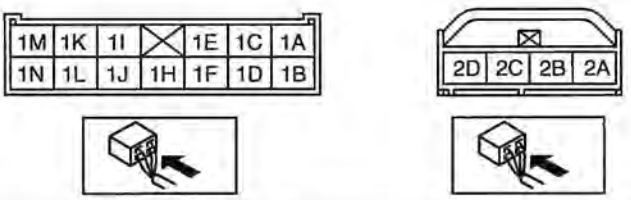

E6U912ZW5101

Terminal voltage list

Terminal	Signal name	Connected to	Measured condition	Voltage (V)/ Continuity	Inspection item(s)
1C	ACC	MIRR 5A	Ignition switch is at ACC position	B+	• Inspect MIRR 5A fuse • Related wiring harnesses
			Ignition switch is at LOCK position	Below 1.0	
1E	IG1	IG KEY1 30 A fuse	Ignition switch is at ON position	B+	• Inspect IG KEY1 30 A fuse • Related wiring harnesses
			Ignition switch is at LOCK position	Below 1.0	
1F	Power-cut signal	Power window subswitch	Ignition switch at ON and power-cut switch at UNLOCK	B+	• Power window subswitch (See 09–12–9 POWER WINDOW SUBSWITCH INSPECTION.) • Related wiring harnesses
1G	Communication	Power window subswitch passenger's side)	-	-	-
1H	Communication	BCM	-	-	-
1I	Close output	Power window motor	While door glass is opening	Below 1.0	• Power window motor (See 09–12–6 POWER WINDOW MOTOR INSPECTION.) • Related wiring harnesses
			While door glass is closing	B+	
1K	Open output	Power window motor	While door glass is opening	B+	• Power window motor (See 09–12–6 POWER WINDOW MOTOR INSPECTION.) • Related wiring harnesses
			While door glass is closing	Below 1.0	

09–12

Terminal	Signal name	Connected to	Measured condition	Voltage (V)/ Continuity	Inspection item(s)
1M	GND	Body Ground	Under any condition: inspect for continuity to ground	Continuity detected	• GND
1N	Power supply	P. WIND 30 A fuse	Under any condition	B+	• P. WIND 30 A fuse • Related wiring harnesses
2A	Sensor ground	Power window motor	Under any condition: inspect for continuity to ground	Continuity detected	• Power window motor (See 09–12–6 POWER WINDOW MOTOR INSPECTION.) • Related wiring harnesses
2B	Power supply	Power window motor	While IG ON or IG OFF timer works	B+	• Power window motor (See 09–12–6 POWER WINDOW MOTOR INSPECTION.) • Related wiring harnesses
2C	Pulse 1	Power window motor	Door glass is in motion	Alternates between 0 and B+	• Power window motor (See 09–12–6 POWER WINDOW MOTOR INSPECTION.) • Related wiring harnesses
			Door glass is not in motion	0 or B+	
2D	Pulse 2	Power window motor	Door glass is in motion	Alternates between 0 and B+	• Power window motor (See 09–12–6 POWER WINDOW MOTOR INSPECTION.) • Related wiring harnesses
			Door glass is not in motion	0 or B+	

Rear Side

1. Remove the power window main switch. (See 09–12–6 POWER WINDOW SWITCH REMOVAL/ INSTALLATION.)
2. When inspecting the rear, turn the power-cut switch UNLOCK.
3. Inspect for continuity between the power window main switch terminals.
   - If not as specified, replace the power window main switch.

Rear left ○—○ : Continuity

Switch position	Terminal			
	1B	1M	1D	1A
CLOSED	○		○	
		○		○
OFF		○	○	○
OPEN	○			○
		○	○	

Rear right ○—○ : Continuity

Switch position	Terminal			
	1B	1M	1L	1J
CLOSED	○		○	
		○		○
OFF		○	○	○
OPEN	○			○
		○	○	

E6U912ZW5103

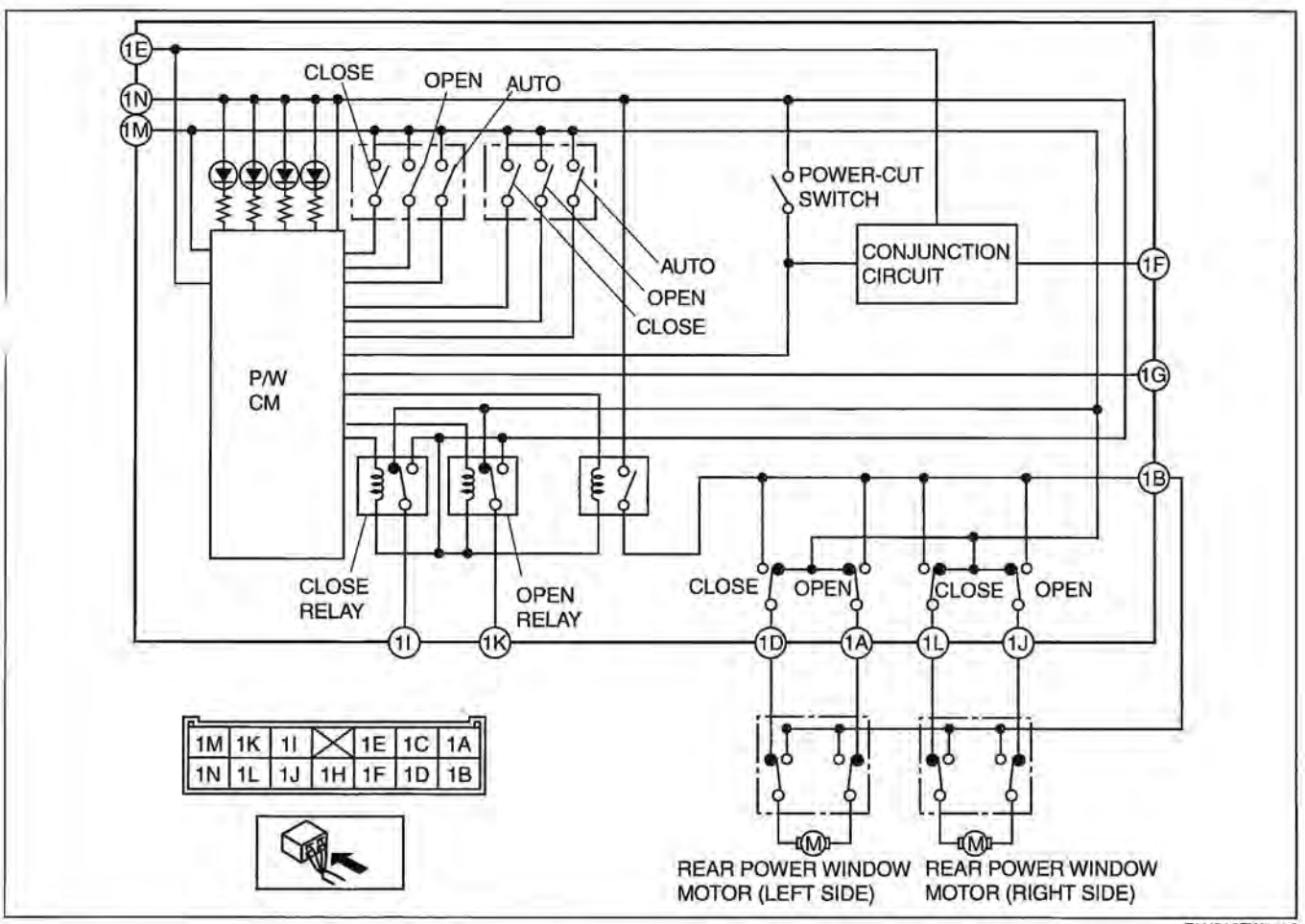

E6U912ZW5102

POWER WINDOW SUBSWITCH INSPECTION

E6U091266330W03

Passenger's Side

1. Measure the voltage at each terminal (other than terminals I and H).
   - If the voltage is not as specified in the Terminal Voltage Table, inspect the parts under "Inspection item(s)" and related wiring harnesses.
2. Disconnect the negative battery cable.
3. Inspect the power window subswitch connector for continuity at terminals I and H.
4. If the system does not work properly even though the inspection items or related wiring harnesses do not have any malfunction, replace the power window subswitch.

Terminal Voltage Table

Terminal	Signal name	Connected to	Measured condition	Voltage (V)/ Continuity	Inspection item(s)
A	Power-cut signal	Power window main switch	Ignition switch at ON and power-cut switch at UNLOCK	B+	• Power window main switch (See 09–12–7 POWER WINDOW MAIN SWITCH INSPECTION.) • Related wiring harnesses
B	Open output	Power window motor	While door glass is opening	B+	• Power window motor (See 09–12–6 POWER WINDOW MOTOR INSPECTION.) • Related wiring harnesses
			While door glass is closing	1.0 or less	
C	Pulse 1	Power window motor	Door glass moving	Alternates between 1.0 or less and B+.	• Power window motor (See 09–12–6 POWER WINDOW MOTOR INSPECTION.) • Related wiring harnesses
			Door glass stopped	1.0 or less or B+	
D	Power supply	P.WIND 30 A fuse	Under any condition	B+	• P.WIND 30 A fuse • Related wiring harnesses
F	Pulse 2	Power window motor	Door glass moving	Alternates between 1.0 or less and B+.	• Power window motor (See 09–12–6 POWER WINDOW MOTOR INSPECTION.) • Related wiring harnesses
			Door glass stopped	1.0 or less or B+	
H	GND	Body ground	Under any condition: Inspect for continuity to ground.	Continuity detected	• GND
I	Sensor ground	Power window motor	Under any condition: Inspect for continuity to ground.	Continuity detected	• Power window motor (See 09–12–6 POWER WINDOW MOTOR INSPECTION.) • Related wiring harnesses
J	Close output	Power window motor	While door glass is opening	1.0 or less	• Power window motor (See 09–12–6 POWER WINDOW MOTOR INSPECTION.) • Related wiring harnesses
			While door glass is closing	B+	
K	Power supply	Power window motor	Ignition switch at ON or during IG-OFF timer	B+	• Power window motor (See 09–12–6 POWER WINDOW MOTOR INSPECTION.) • Related wiring harnesses
L	Communication	Power window main switch	–	–	–

Rear Side

1. Inspect for continuity between the power window subswitch terminals.
   - If not as specified, replace the power window subswitch.

O—O : Continuity

Switch position	Terminal				
	A	B	C	D	E
CLOSED		O—O		O—O	
OFF	O—O		O—O		O—O
OPEN	O—O	O—O			

E6U912ZW5105

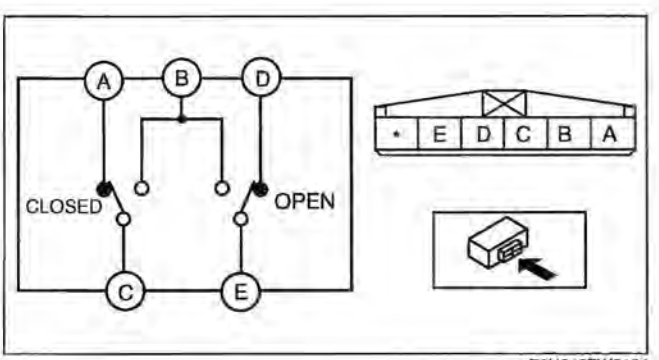

E6U912ZW5104

POWER WINDOW INITIALIZATION PROCEDURE

E6U091266330W04

Note

- Initial setting must be performed for the switch of each window front and rear.
- If the following operations have been performed, initial setting is reset, and auto up/down and two-step down operation are disabled. Therefore, performing initial setting is necessary.
  - — Negative battery cable disconnected or power window system power supply fuse removed (perform initial setting for the switches of all seats.)
  - — Power window switch connector disconnected (Perform initial setting for the switch connected with the connector.)
  - — Prolonged open/close operation of the power window main or sub switches causes the circuit breaker to activate and automatic operation is disabled.

1. Turn the ignition switch to the ON position.
2. Press the switch of each window and fully open the door glass.
3. Pull the switch of each window to the manual-up position to fully close the door glass, and keep holding the switch up at the position for **approx. 2 s.**

TWO-STEP DOWN FUNCTION OPERATIVE/NON-OPERATIVE SWITCHING PROCEDURE

E6U091266330W05

Note

- By following the procedure below, the two-step down function is switched to non-operative when it is operative, and to operative when it is non-operative.

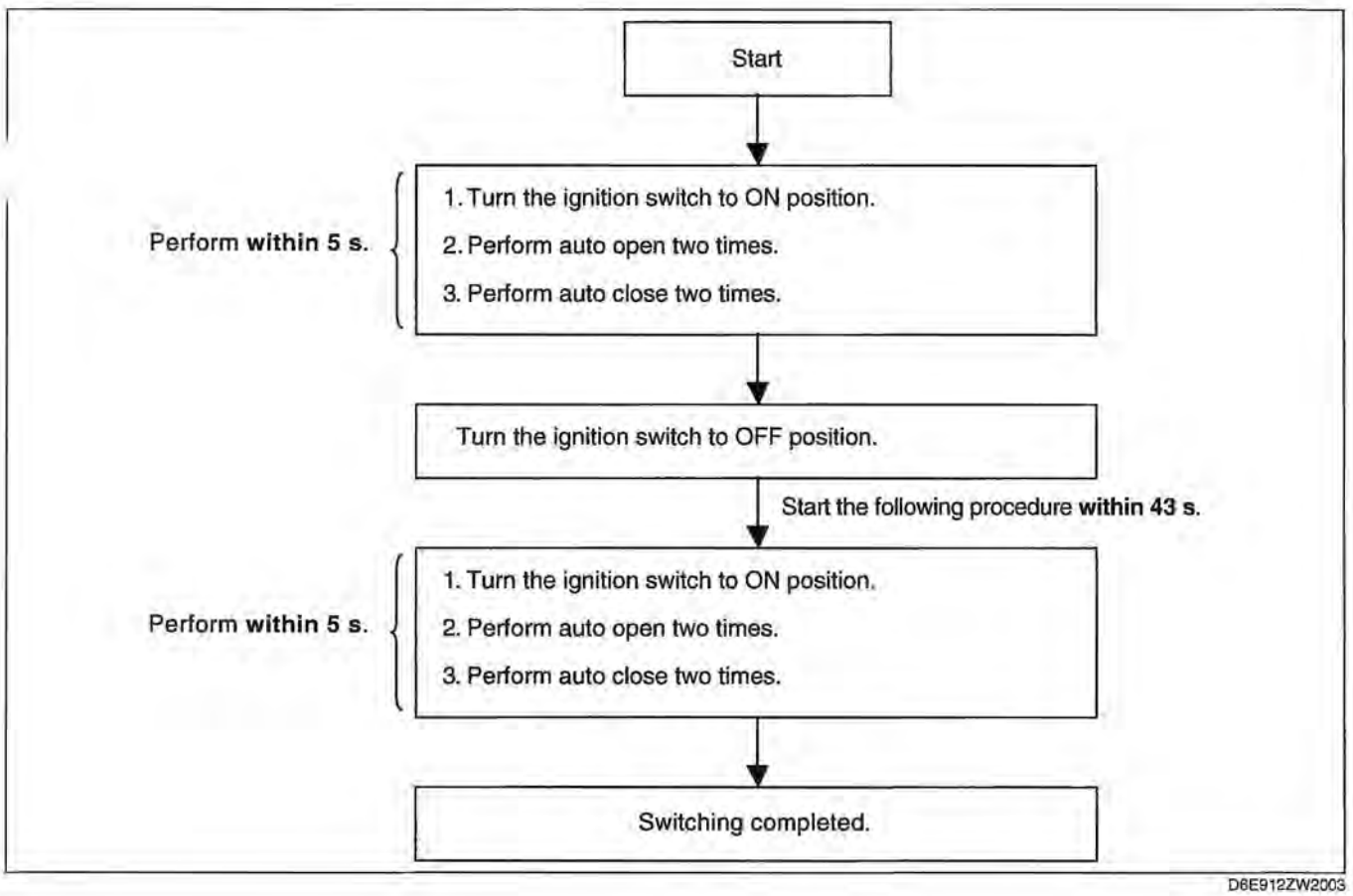

D6E912ZW2003

09–12

DOOR GLASS POSITION CHANGE PROCEDURE

E6U091266330W06

Note

- After performing the following procedure, verify that the two-step down function operates normally and th door glass position has changed. If the two-step down function does not operate or the door glass positic has not changed, the procedure was not performed properly. Repeat the procedure from the beginning.

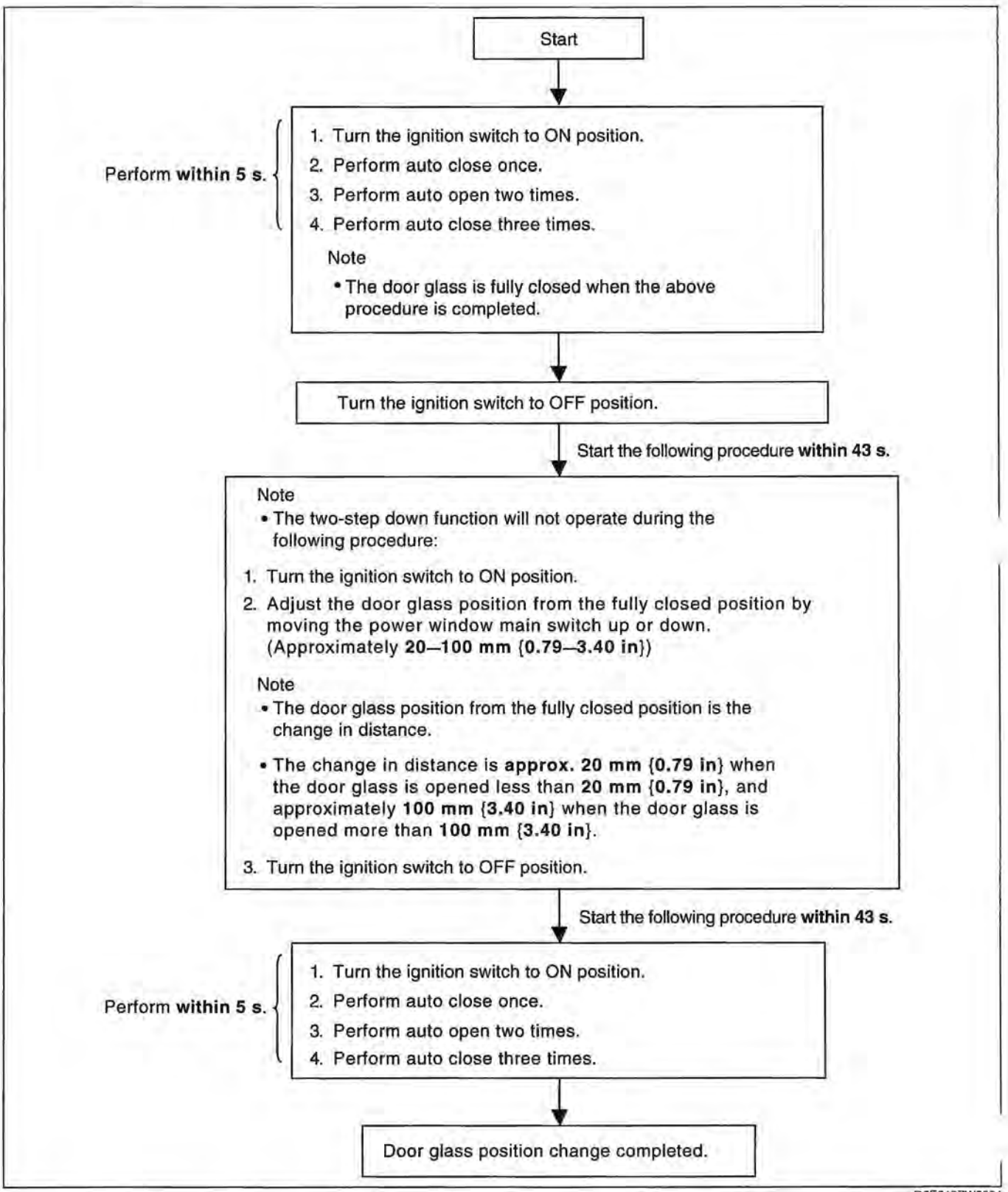

D6E912ZW2004

WINDSHIELD REMOVAL

E6U091263900W01

1. Remove the rearview mirror. (See 09–12–29 REARVIEW MIRROR REMOVAL/INSTALLATION.)
2. Remove the cowl grille. (See 09–16–4 COWL GRILLE REMOVAL/INSTALLATION [EXCEPT L3 WITH TC].) (See 09–16–4 COWL GRILLE REMOVAL/INSTALLATION [L3 WITH TC].)
3. Remove the headliner. (See 09–17–24 HEADLINER REMOVAL/INSTALLATION.)
4. Apply protective tape along the edge of the body to protect it from damage.
5. Apply protective tape to the dashboard to protect it from damage.
6. Cut the lip of the windshield molding using a razor.

Warning

- **Using a razor with bare hands can cause injury. Always wear gloves when using a razor.**

Note

- The windshield molding is a replacement part.

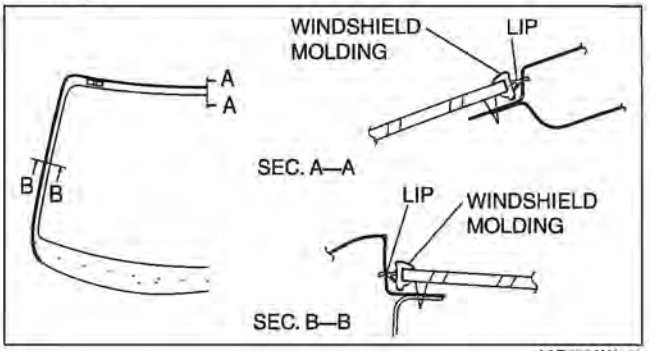

A6E7738W006

Not Reusing Windshield

1. Remove the base. (See 09–12–30 BASE REMOVAL.)

Note

- For the areas of the sealant that are difficult to cut, use the **SST** (piano wire) and follow the procedure under "Reusing Windshield."

2. Use the tool like that shown in the figure, and insert the blade into the sealant.
3. Pull through the sealant around the edge of the glass.
4. Remove the windshield.

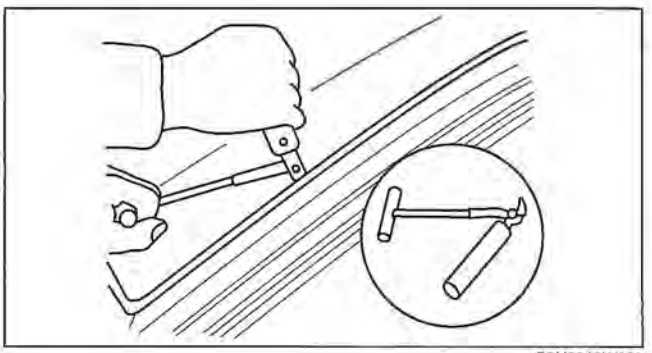

B6U0912W028

Reusing Windshield

Note

- Before removing the windshield from the body, mark the position of the windshield by affixing tape to the windshield and body panel.

1. Make a hole through the sealant, avoiding pins, from the inside of the vehicle using an awl.

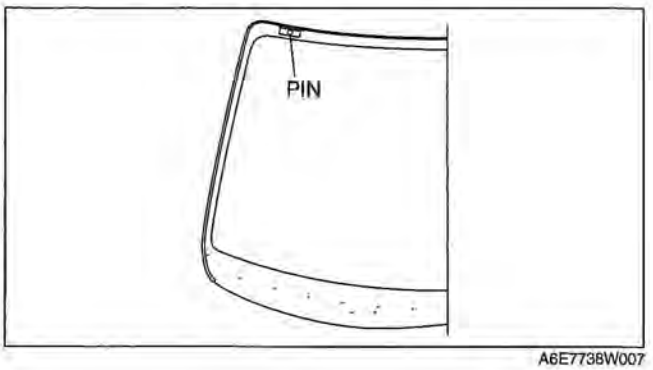

A6E7738W007

2. Pass the **SST** (piano wire) through the hole.

Warning
- **Using the SST (piano wire) with bare hands can cause injury. Always wear gloves when using the SST (piano wire).**

3. Wind each end of the **SST** (piano wire) around a bar.

Note
- Use a long sawing action to spread the work over the whole length of the **SST** (piano wire) to prevent it from breaking due to localized heating.

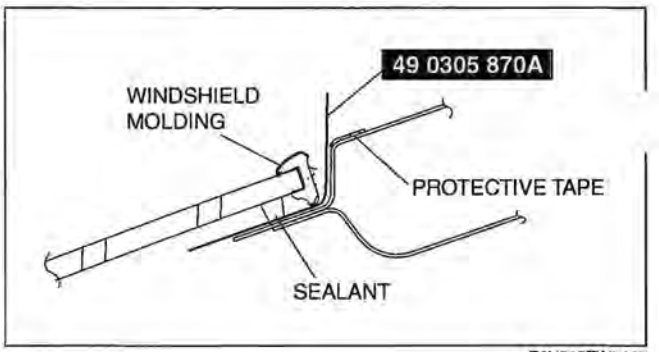

E6U912ZW5117

4. Fix one end of the **SST** (piano wire), and while pulling the other end, cut the sealant around the windshield.
5. Remove the windshield.
6. Remove the pins from the windshield.
7. Remove the windshield molding from the windshield glass.

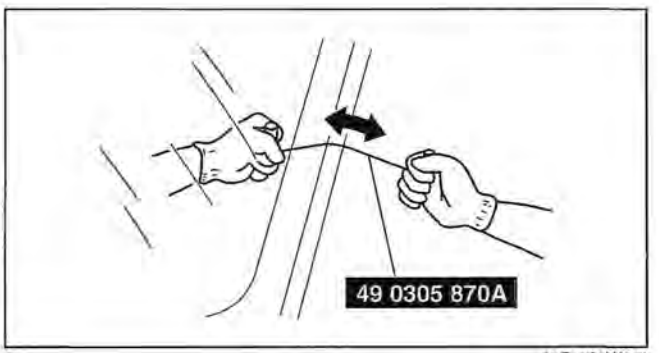

A6E7738W021

WINDSHIELD INSTALLATION

E6U091263900W02

Caution
- **To prevent the sealant from cracking or the glass from being pushed out by air pressure if a doc is closed, open all of the windows and leave them open until the sealant has hardened.**

1. Cut away the old sealant using a razor so that **1—2 mm {0.04—0.07 in}** thickness of sealant remains along the perimeter of the frame.

Warning
- **Using a razor with bare hands can cause injury. Always wear gloves when using a razor.**

2. If the sealant has come off completely in any one place, apply some primer after degreasing, and allow it **approx. 30 min** to dry. Then put on new sealant to create a **2 mm {0.08 in}** layer.
3. Clean and degrease an **approx. 50.0 mm {1.97 in}** wide strip along the perimeter of the glass and the bonding area on the body.

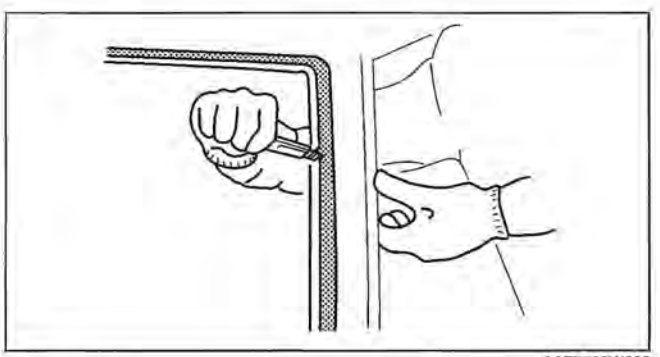
A6E7738W023

4. If installing reused glass, install pins at the ceramic void on the upper part of the windshield.
5. If installing reused glass, align the windshield molding marking and the center of the upper section of the windshield, then install the molding to the windshield.

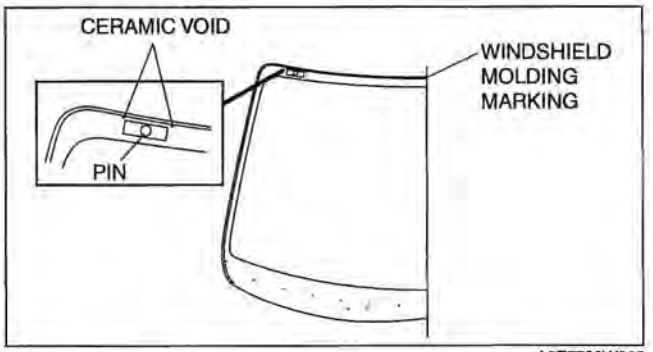

A6E7738W005

6. Use only glass primer on the glass. Allow it to dry for **approx. 30 min**.

Caution

- **Keep the area free of dirt and grease, and do not touch the surface. Otherwise, the primer may not properly bond to the surface of the glass and body, which may cause leaks to occur.**

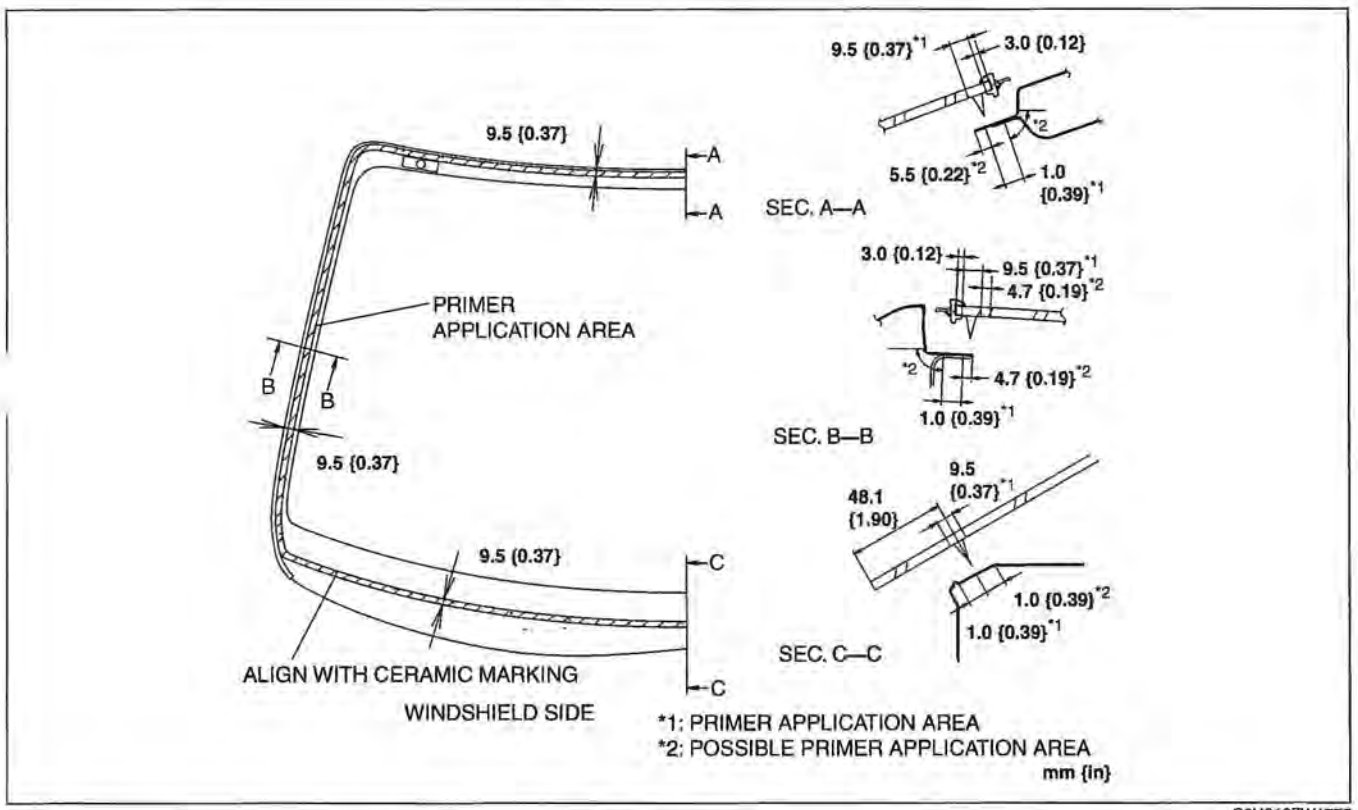

C6U912ZW1777

7. Apply sealant to the area of the glass surface as shown in the figure.
8. Set the windshield in place and insert the pins into the body. Install the windshield.

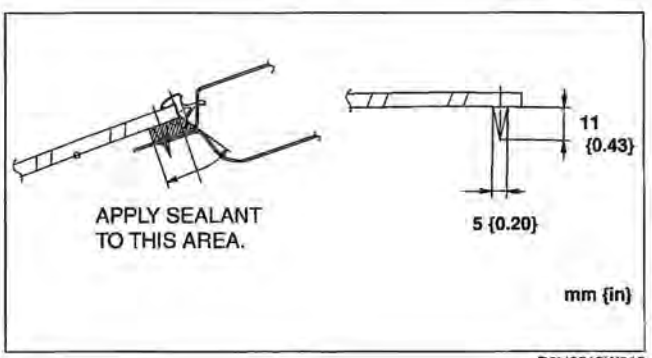

B6U0912W018

9. Verify that the gap of the A-pillar part as shown in the figure.

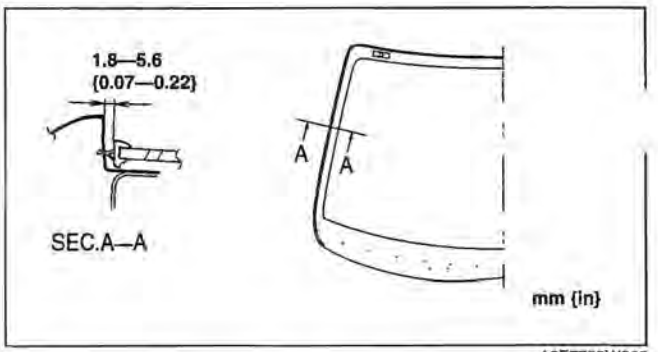

A6E7738W003

10. Keeping the measurement of the molding lip gap within specification, press completely along the perimeter of the glass.
11. Install the cowl grille. (See 09–16–4 COWL GRILLE REMOVAL/INSTALLATION [EXCEPT L3 WITH TC].) (See 09–16–4 COWL GRILLE REMOVAL/INSTALLATION [L3 WITH TC].)
12. Install the headliner (See 09–17–24 HEADLINER REMOVAL/INSTALLATION.)
13. Install the rearview mirror. (See 09–12–29 REARVIEW MIRROR REMOVAL/ INSTALLATION.)
14. Allow the sealant to harden completely.

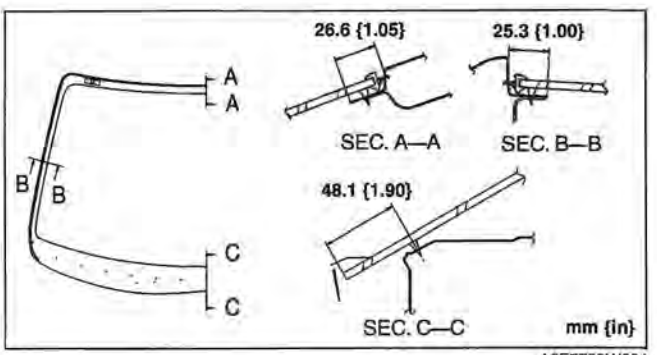

A6E7738W004

Sealant hardening time: 24 hours

REAR WINDOW GLASS REMOVAL

E6U091263900W00

1. For the Sport sedan, remove the following parts:
   (1) Remove the headliner. (See 09–17–24 HEADLINER REMOVAL/INSTALLATION.)
   (2) Remove the rear package trim. (See 09–17–16 REAR PACKAGE TRIM REMOVAL/INSTALLATION [SPORT SEDAN].)
2. For the 5-Door, remove the following parts:
   (1) Remove the rear wiper arm and blade. (See 09–19–14 REAR WIPER ARM AND BLADE REMOVAL/ INSTALLATION [5-DOOR, SPORT WAGON].)
   (2) Remove the liftgate lower trim. (See 09–17–23 LIFTGATE LOWER TRIM REMOVAL/INSTALLATION [5-DOOR, SPORT WAGON].)
   (3) Remove the liftgate side trim. (See 09–17–22 LIFTGATE SIDE TRIM REMOVAL/INSTALLATION [5-DOOR, SPORT WAGON].)
   (4) Remove the liftgate upper trim. (See 09–17–21 LIFTGATE UPPER TRIM REMOVAL/INSTALLATION [5-DOOR, SPORT WAGON].)
3. For the Sport Wagon, remove the following parts:
   (1) Remove the rear wiper arm and blade. (See 09–19–14 REAR WIPER ARM AND BLADE REMOVAL/ INSTALLATION [5-DOOR, SPORT WAGON].)
   (2) Remove the liftgate lower trim. (See 09–17–23 LIFTGATE LOWER TRIM REMOVAL/INSTALLATION [5-DOOR, SPORT WAGON].)
   (3) Remove the liftgate side trim. (See 09–17–22 LIFTGATE SIDE TRIM REMOVAL/INSTALLATION [5-DOOR, SPORT WAGON].)
   (4) Remove the liftgate upper trim. (See 09–17–21 LIFTGATE UPPER TRIM REMOVAL/INSTALLATION [5-DOOR, SPORT WAGON].)
   (5) Remove the rear wiper motor. (See 09–19–14 REAR WIPER ARM AND BLADE REMOVAL/ INSTALLATION [5-DOOR, SPORT WAGON].)
4. Apply protective tape along the edge of the body to protect it from damage.

5. Cut the lip of the rear window molding using a razor.

Warning

- **Using a razor with bare hands can cause injury. Always wear gloves when using a razor.**

Note

- The rear window molding is a replacement part.

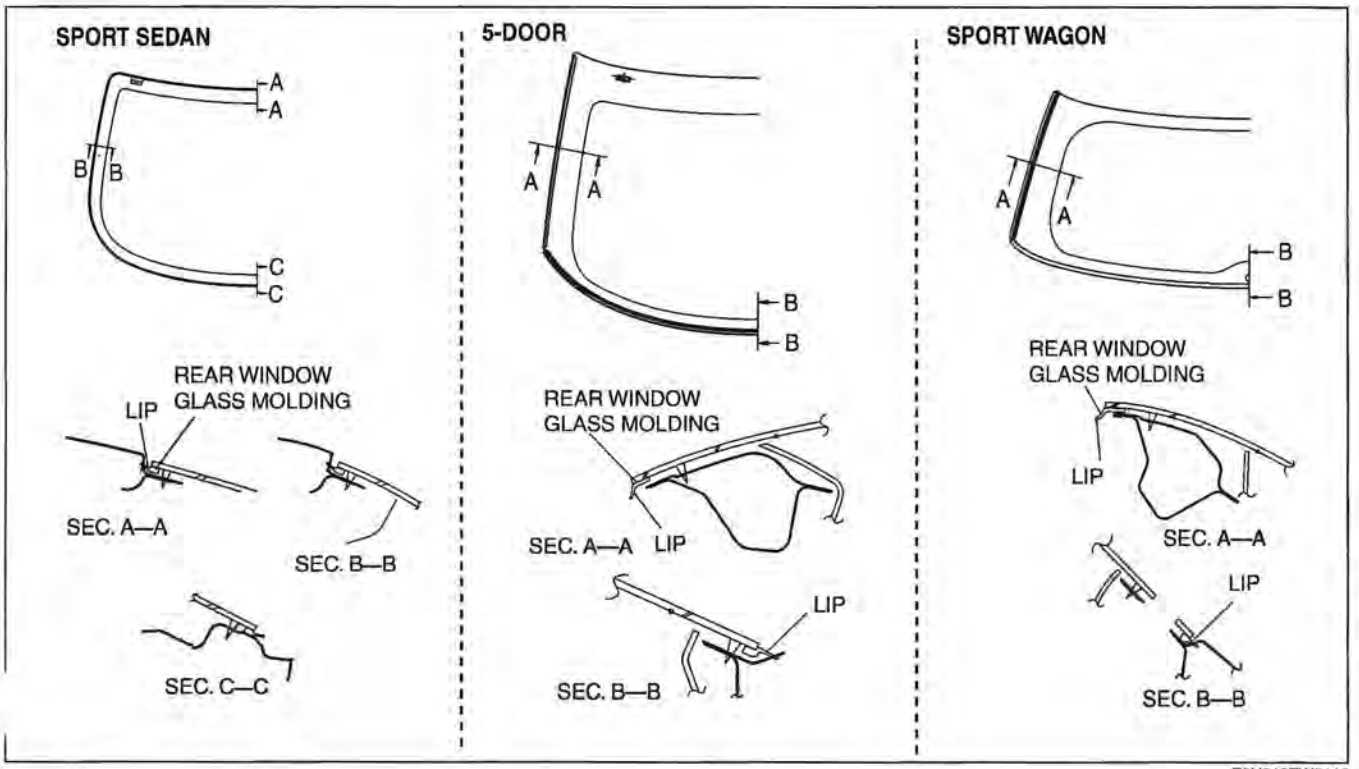

E6U912ZW5110

09–12

Not Reusing Rear Window Glass

Note

- For the areas of the sealant that are difficult to cut, use a **SST** (piano wire) and follow the procedure under "Reusing Rear Window Glass."

1. Use the tool like that shown in the figure, and insert the blade into the sealant.
2. Pull through the sealant around the edge of the glass.
3. Remove the rear window glass.

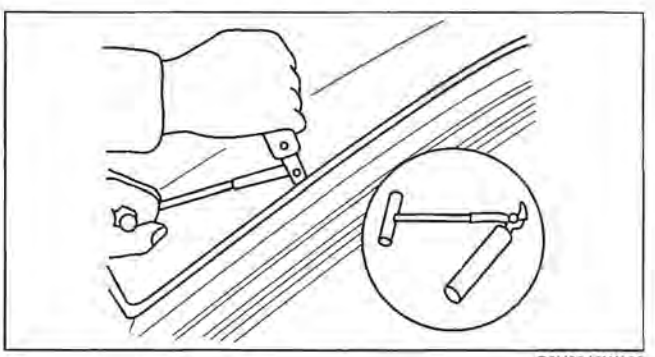

B6U0912W028

Reusing Rear Window Glass

Note
- Before removing the rear window glass from the body, mark the position of the glass by affixing tape to th glass and body panel.

1. Make a hole through the sealant, avoiding pins, from the inside of the vehicle using an awl.

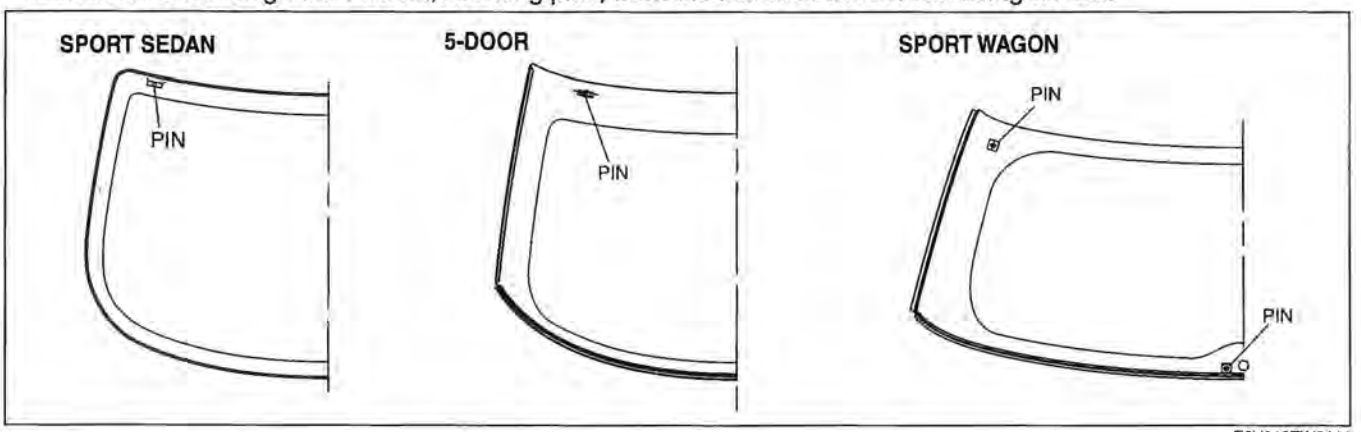

E6U912ZW5111

2. Pass the **SST** (piano wire) through the hole.

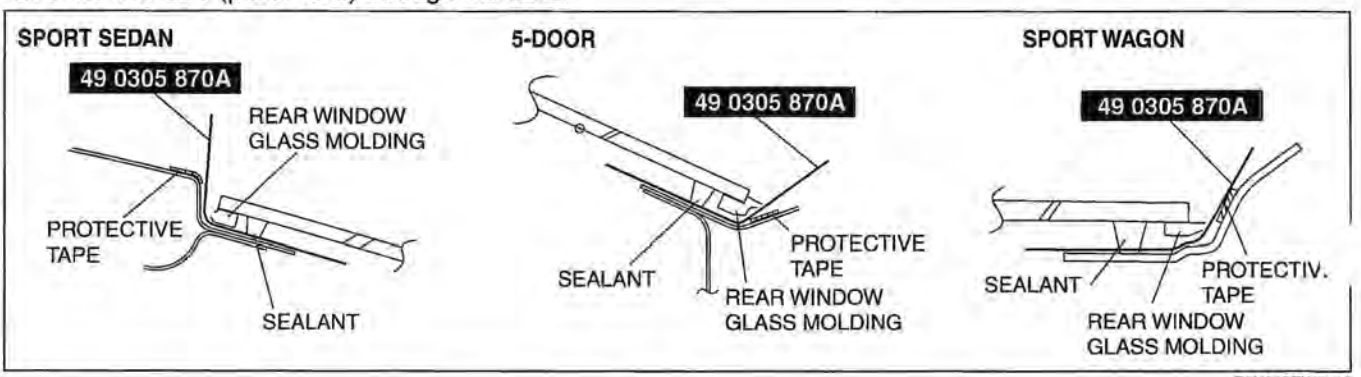

E6U912ZW5112

Warning
- **Using the SST (piano wire) with bare hands can cause injury. Always wear gloves when using the SST (piano wire).**

3. Wind each end of the **SST** (piano wire) around a bar.

Note
- Use a long sawing action to spread the work over the whole length of the **SST** (piano wire) to prevent it from breaking due to localized heating.

4. Fix one end of the **SST** (piano wire), and while pulling the other end, cut the sealant around the rear window glass.
5. Remove the rear window glass.
6. Remove the pins from the glass.
7. Remove the rear window molding from the glass.

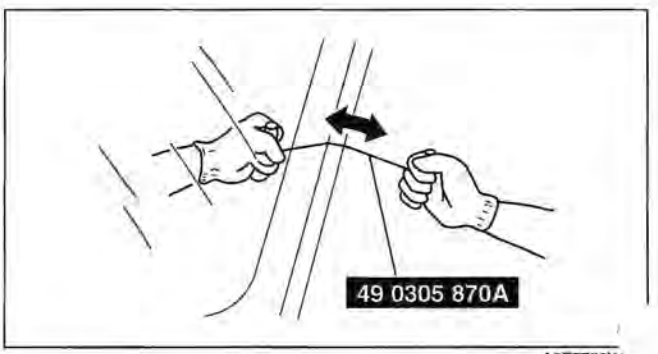

A6E7738W

REAR WINDOW GLASS INSTALLATION

E6U091263900W04

Caution
- **To prevent the sealant from cracking or the glass from being pushed out by air pressure if a door is closed, open all of the windows and leave them open until the sealant has hardened.**

1. Cut away the old sealant using a razor so that **1—2 mm {0.04—0.07 in}** thickness of sealant remains around the circumference of the frame.

Warning
- **Using a razor with bare hands can cause injury. Always wear gloves when using a razor.**

2. If the sealant has come off completely in any one place, apply some primer after degreasing, and allow it **approx. 30 min** to dry. Then put on new sealant to create a **2 mm {0.08 in}** layer.
3. Clean and degrease an **approx. 50.0 mm {1.97 in}** wide strip along the perimeter of the glass and the bonding area on the body.
4. Install the dams and spacer as shown in the figure. (Sport Wagon only)

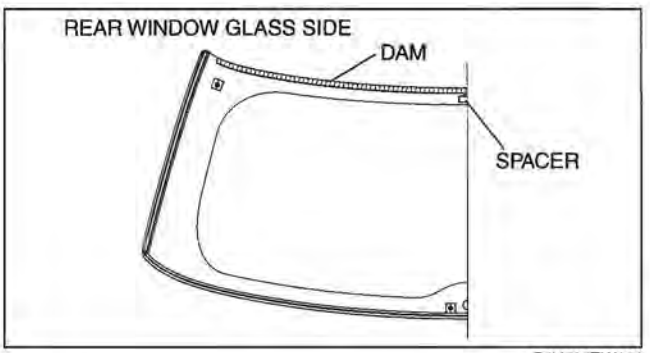

C6U912ZW101

5. Install the molding as shown in the figure.

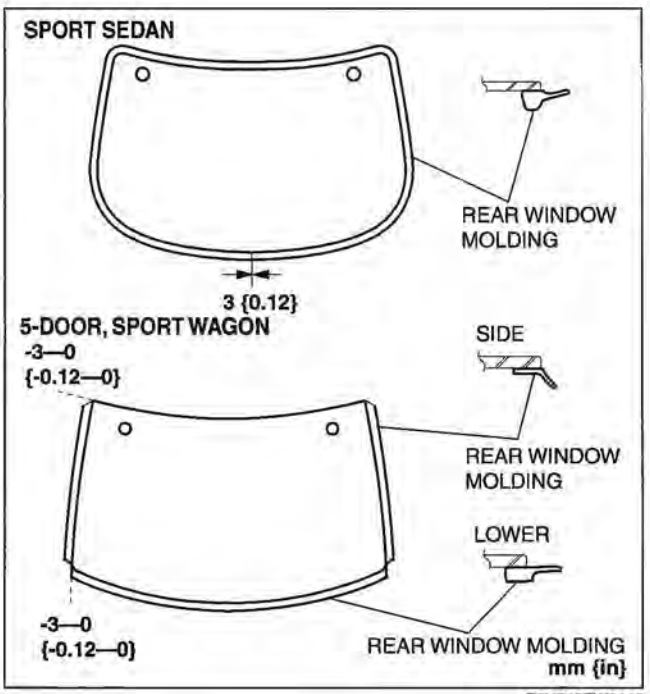

E6U912ZW5113

6. Use only glass primer on the glass. Allow it to dry for **approx. 30 min**.

Caution

- **Keep the area free of dirt and grease, and do not touch the surface or the primer may not proper' bond to the surface of the glass and body, which may cause leaks to occur.**

SPORT SEDAN

REAR WINDOW GLASS SIDE

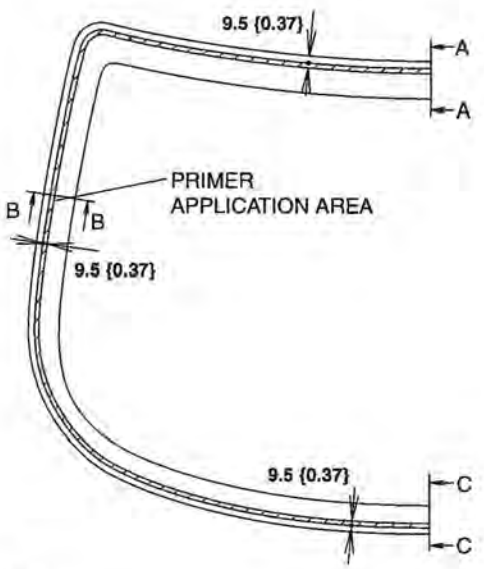

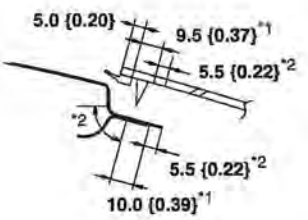

SEC. A—A

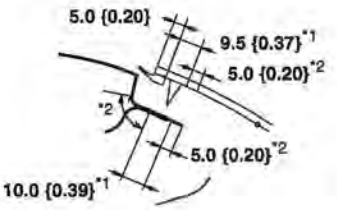

SEC. B—B

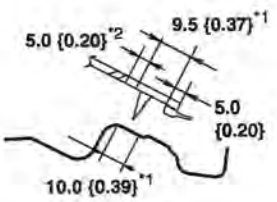

SEC. C—C

5-DOOR

REAR WINDOW GLASS SIDE

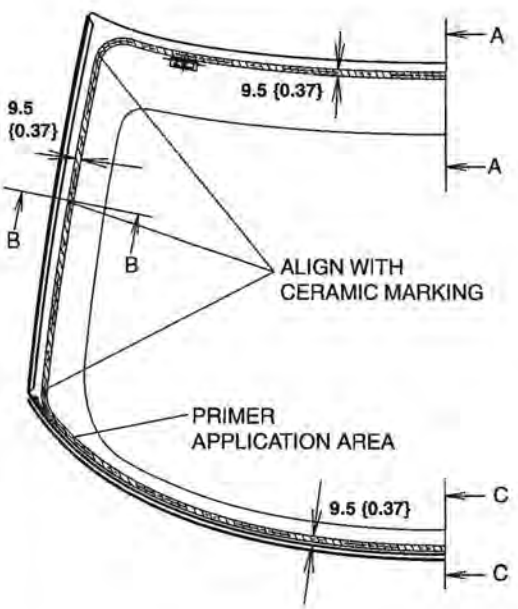

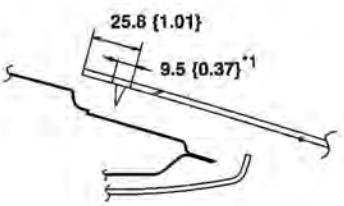

SEC. A—A

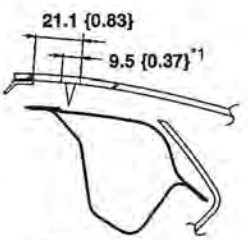

SEC. B—B

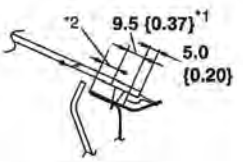

SEC. C—C

*1: PRIMER APPLICATION AREA
*2: POSSIBLE PRIMER APPLICATION AREA

mm {in}

E6U912ZW5114

SPORT WAGON

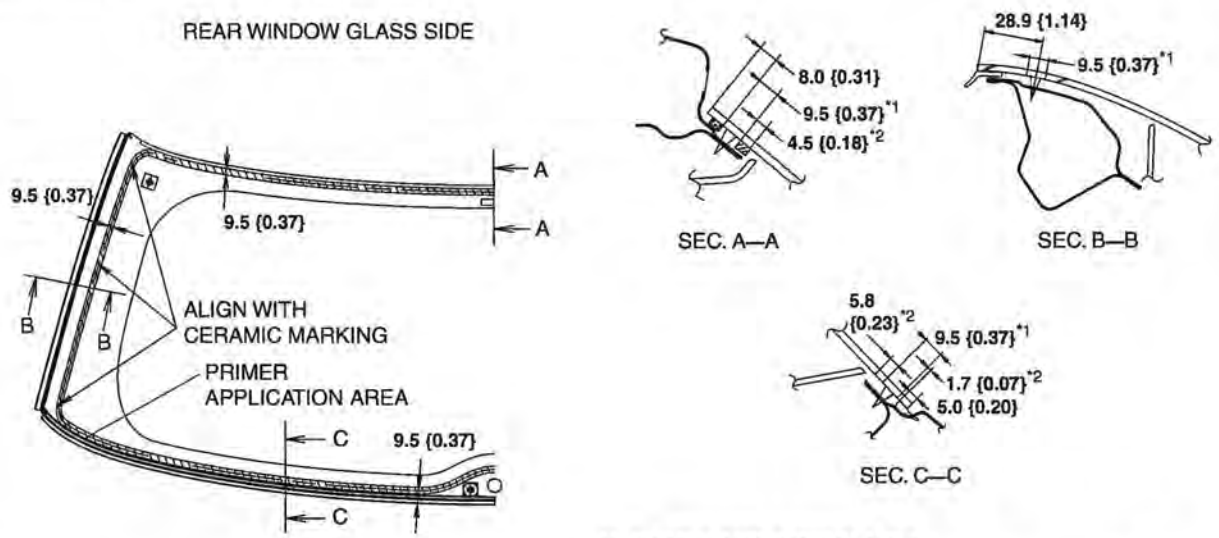

D6U912ZW7007

7. Apply sealant to the area of the glass surface as shown in the figure.

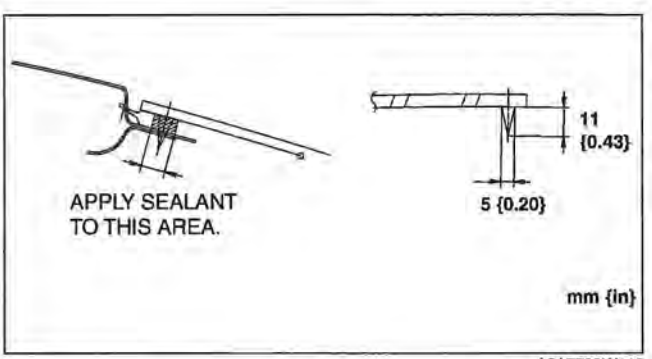

A6A7738W113

8. Set the position of the front windshield glass and insert a pin into the body. Install the glass.

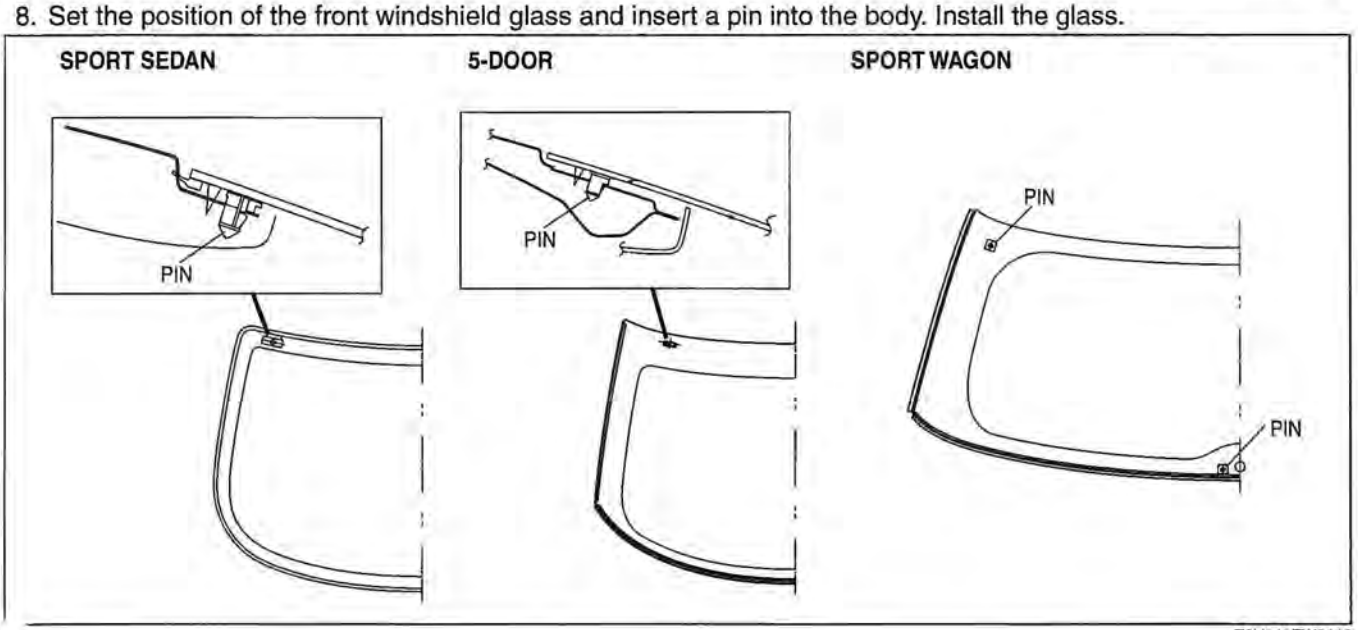

E6U912ZW5115

9. Verify that the gap of the upper part is **7.3 mm {0.29 in}** and the A pillar part is **6.8 mm {0.27 in}**. (Only for Sport sedan)

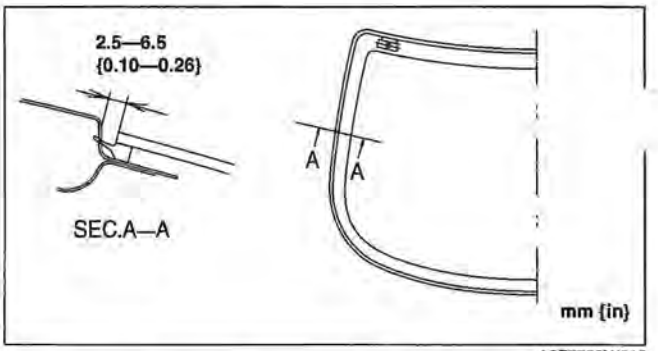

A6E7738W016

10. Keeping the measurement of the molding lip gap within specification, press completely along the perimeter of the glass.

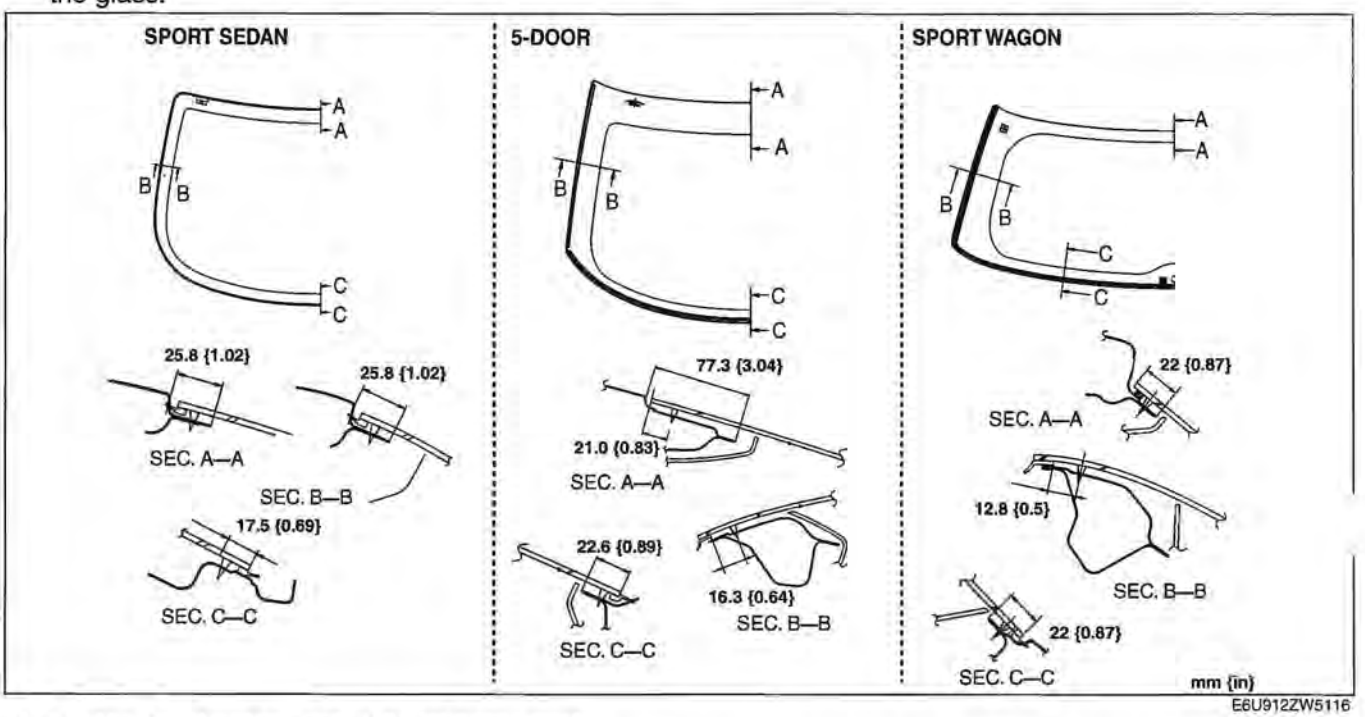

E6U912ZW5116

11. For the Sport sedan, install the following parts:
    (1) Install the rear package trim. (See 09–17–16 REAR PACKAGE TRIM REMOVAL/INSTALLATION [SPORT SEDAN].)
    (2) Install the headliner. (See 09–17–24 HEADLINER REMOVAL/INSTALLATION.)
12. For the 5-Door, install the following points.
    (1) Install the liftgate upper trim. (See 09–17–21 LIFTGATE UPPER TRIM REMOVAL/INSTALLATION [5-DOOR, SPORT WAGON].)
    (2) Install the liftgate side trim. (See 09–17–22 LIFTGATE SIDE TRIM REMOVAL/INSTALLATION [5-DOOR, SPORT WAGON].)
    (3) Install the liftgate lower trim. (See 09–17–23 LIFTGATE LOWER TRIM REMOVAL/INSTALLATION [5-DOOR, SPORT WAGON].)
    (4) Install the rear wiper arm and blade. (See 09–19–14 REAR WIPER ARM AND BLADE REMOVAL/INSTALLATION [5-DOOR, SPORT WAGON].)
13. For the Sport Wagon, install the following points.
    (1) Install the rear wiper motor. (See 09–19–13 REAR WIPER MOTOR REMOVAL/INSTALLATION [5-DOOR, SPORT WAGON].)
    (2) Install the liftgate upper trim. (See 09–17–21 LIFTGATE UPPER TRIM REMOVAL/INSTALLATION [5-DOOR, SPORT WAGON].)
    (3) Install the liftgate side trim. (See 09–17–22 LIFTGATE SIDE TRIM REMOVAL/INSTALLATION [5-DOOR, SPORT WAGON].)
    (4) Install the liftgate lower trim. (See 09–17–23 LIFTGATE LOWER TRIM REMOVAL/INSTALLATION [5-DOOR, SPORT WAGON].)
    (5) Install the rear wiper arm and blade. (See 09–19–14 REAR WIPER ARM AND BLADE REMOVAL/INSTALLATION [5-DOOR, SPORT WAGON].)
14. Allow the sealant to harden completely.

Sealant hardening time: 24 hours

QUARTER WINDOW GLASS REMOVAL [SPORT WAGON]

E6U091263900W05

1. Apply protective tape along the edge of the body to protect it from damage.
2. Make a hole through the sealant, avoiding pins, from the inside of the vehicle using an awl.

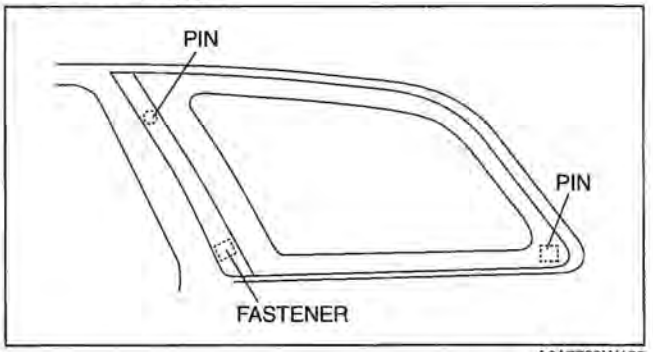

A6A7738W102

3. Pass the **SST** (piano wire) through the hole.

Warning
- **Using a SST (piano wire) with bare hands can cause injury. Always wear gloves when using a SST (piano wire).**

4. Wind each end of the **SST** (piano wire) around a bar.

Note
- Use a long sawing action to spread the work over the whole length of the **SST** (piano wire) to prevent it from breaking due to localized heating.

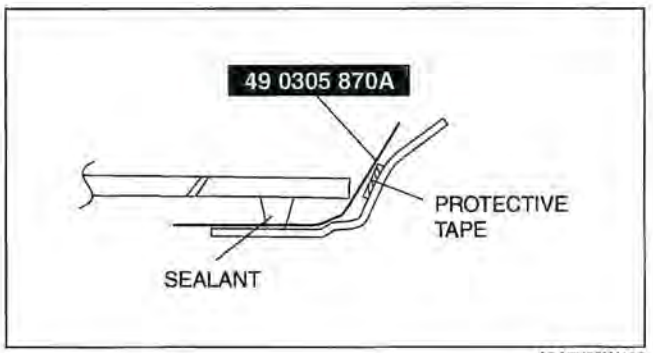

A6A7738W103

Fix one end of the **SST** (piano wire), and while pulling the other end, cut the sealant around the quarter window glass.

6. Remove the quarter window glass.

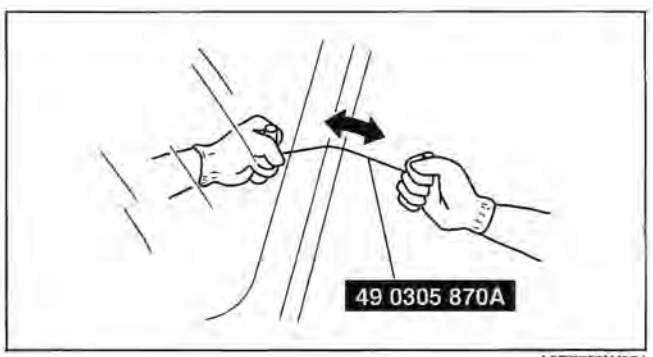

A6E7738W021

QUARTER WINDOW GLASS INSTALLATION [SPORT WAGON]

E6U091263900W06

Caution
- **To prevent the sealant from cracking or the glass from being pushed out by air pressure if a door is closed, open all of the windows and leave them open until the sealant has hardened.**

1. Cut away the old sealant using a razor so that **1—2 mm {0.04—0.07 in}** thickness of sealant remains around the circumference of the frame.

Warning
- **Using a razor with bare hands can cause injury. Always wear gloves when using a razor.**

2. If the sealant has come off completely in any one place, apply some primer after degreasing, and allow it **approx. 30 min** to dry. Then put on new sealant to create a **2 mm {0.08 in}** layer.
3. Clean and degrease an **approx. 50.0 mm {1.97 in}** wide strip around the circumference of the glass and the bonding area on the body.

4. Insert the spacer into the body.

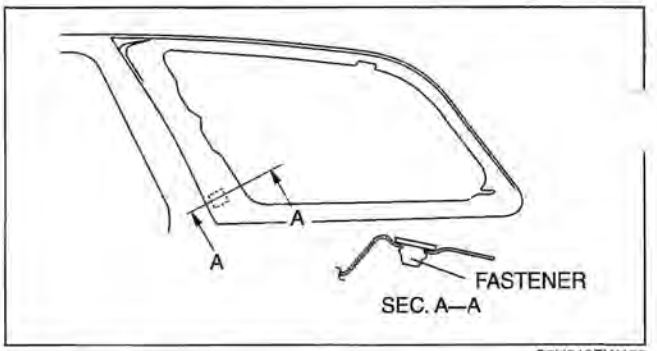

C6U912ZW100

5. Use only glass primer on the glass. Allow it to dry for **approx. 30 min.**

Caution

- **Keep the area free of dirt and grease, and do not touch the surface or the primer may not properly bond to the surface of the glass and body, which may cause leaks to occur.**

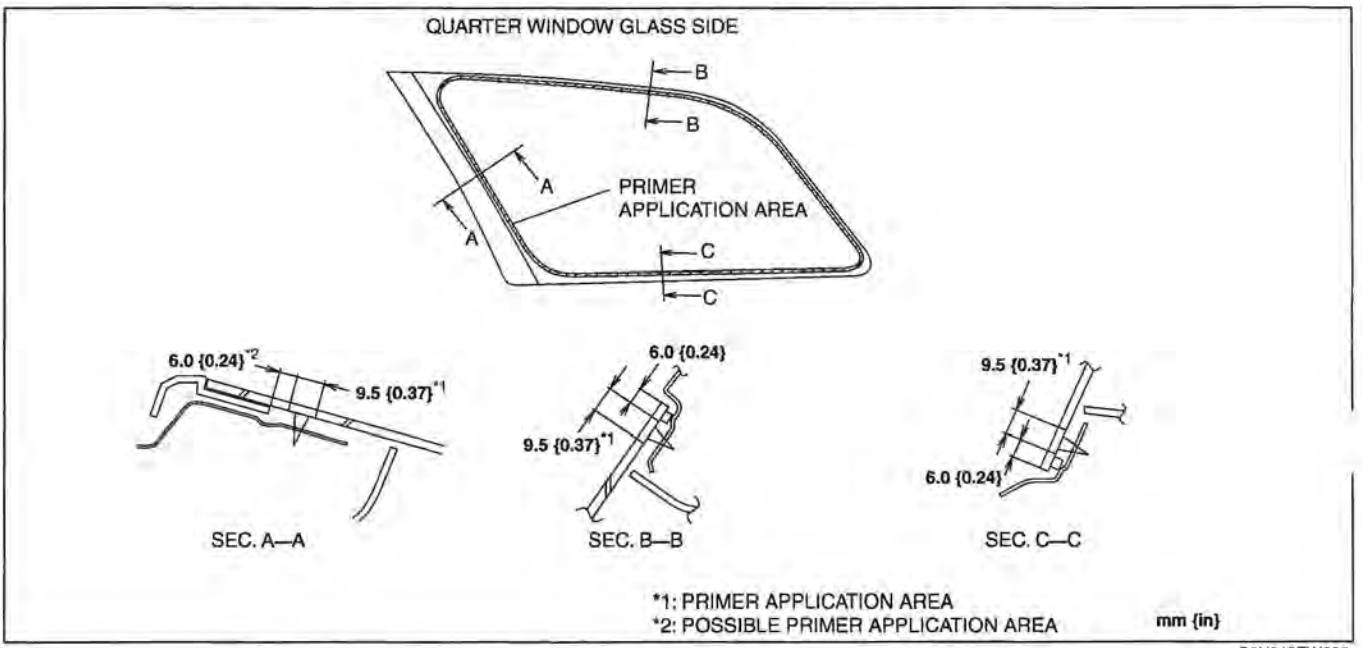

C6U919ZW005

6. Apply sealant to the area of the glass surface as shown in the figure.

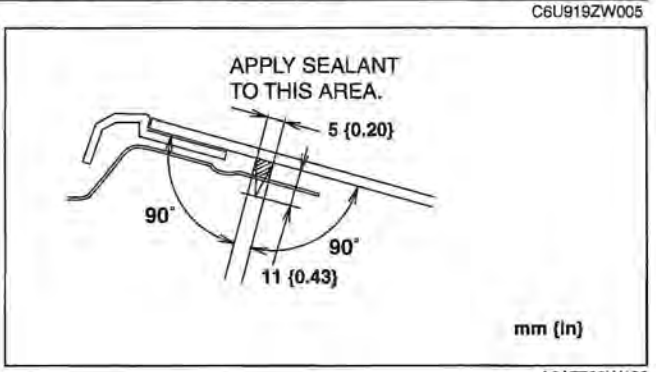

A6A7738W106

7. Set the quarter window glass in place and insert the pins and fastener into the body. Install the quarter window glass.
8. Allow the sealant to harden completely.

Sealant hardening time: 24 hours

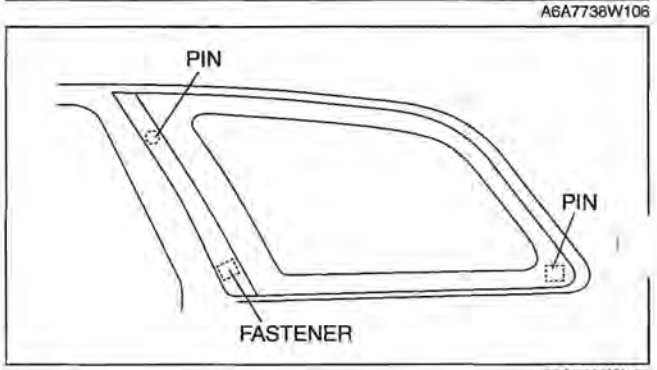

A6A7738W102

FILAMENT REPAIR

E6U091263000W01

1. Use isopropyl alcohol to clean around the damaged section of the filament.
2. Attach tape above and below the damaged section of the filament.
3. Using a small brush or marking pen, repair the filament with silver paint or equivalent.
4. After **2—3 min**, carefully remove the tape without disturbing the repaired area.

Caution
- **Do not use the rear window defroster until the paint is completely dry. It may cause other malfunctions if it is used before the paint is dry.**

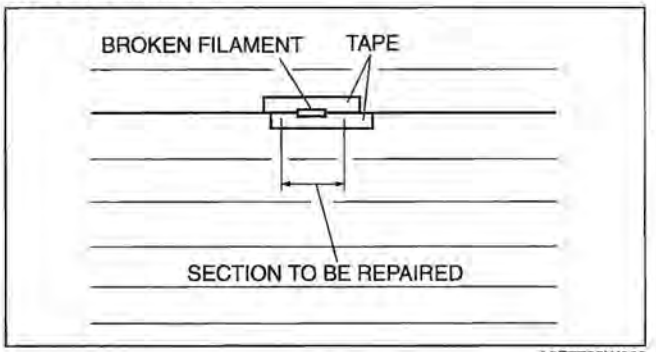

A6E7736W003

5. Use a hot air blower heated to **150 °C {302 °F}** for **30 min** or let the paint set for **24 hours** at **25 °C {77 °F}** to allow it to dry completely.

FILAMENT INSPECTION

E6U091263000W02

1. Turn the ignition switch to the ON position.
2. Turn the rear window defroster switch on.

Caution
- **Directly touching the rear window defroster filament with the lead of the voltmeter will damage it. Wrap aluminum foil around the end of the lead and test the filament by touching it with the foil.**

3. Connect the positive (+) lead of the voltmeter to the positive side of each filament and the negative (–) lead to ground.

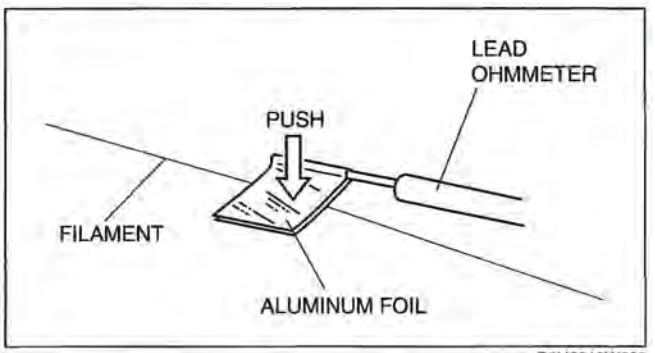

B6U0912W030

4. Gradually, slide the positive (+) lead from the positive side to the negative side and measure the voltage. Verify that the ohmmeter decreases accordingly.
   - If the voltage is not as specified or it changes rapidly, the filament is faulty. Repair the filament.

Measurement point	Voltage (Reference value)
(1)→(2)	Approx. 12 V→ Approx. 0 V

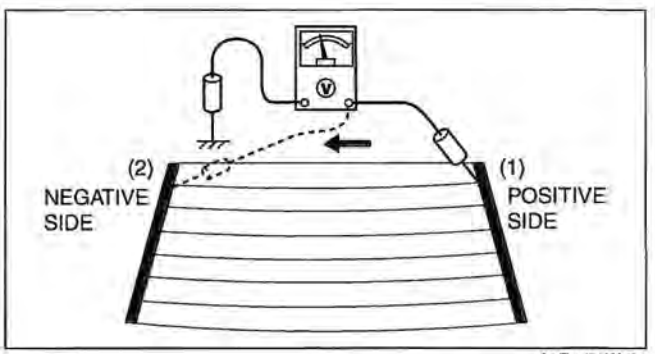

A6E7736W002

POWER OUTER MIRROR REMOVAL/INSTALLATION

E6U091269100W01

1. Disconnect the negative battery cable.
2. Remove the inner garnish.
3. Remove the front door trim. (See 09–17–12 FRONT DOOR TRIM REMOVAL/INSTALLATION.)
4. Disconnect the power outer mirror connector.
5. Remove the nuts.
6. Remove the power outer mirror.
7. Install in the reverse order of removal.

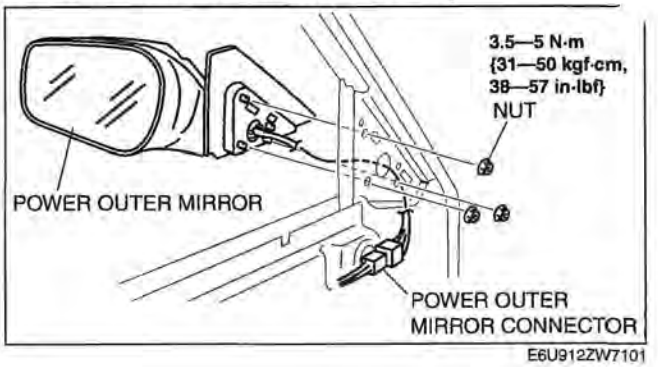

E6U912ZW7101

POWER OUTER MIRROR DISASSEMBLY/ASSEMBLY

E6U091269100W02

1. Disassemble in the order indicated in the table.

1	Outer mirror glass (See 09–12–26 Outer Mirror Glass Disassembly Note.) (See 09–12–27 Outer Mirror Glass Assembly Note.)
2	Connector (with heated outside mirror)
3	Cover (See 09–12–27 Cover Disassembly Note.)
4	Outside mirror

2. Assemble in the reverse order of disassembly.

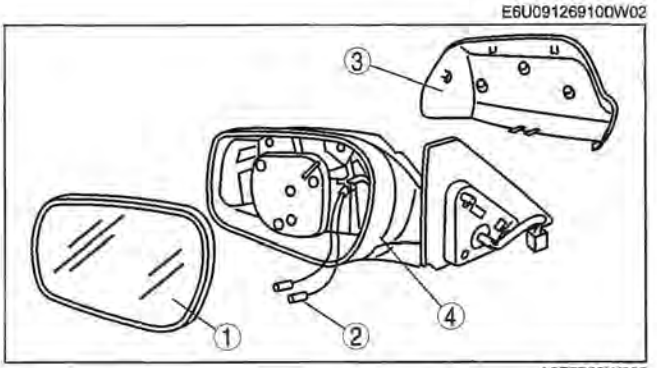

A6E7732W002

Outer Mirror Glass Disassembly Note

1. Press area A of the glass so that area B moves outward.
2. Insert a screwdriver into the notch and remove the glass from the mirror base.

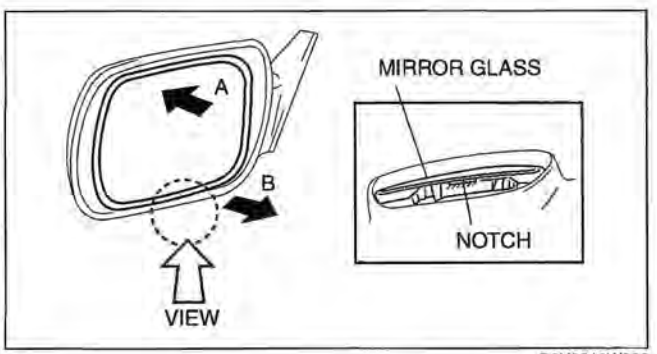

B6U0912W020

Cover Disassembly Note

1. Pull off the tab A with a screwdriver and press the tab B downward.

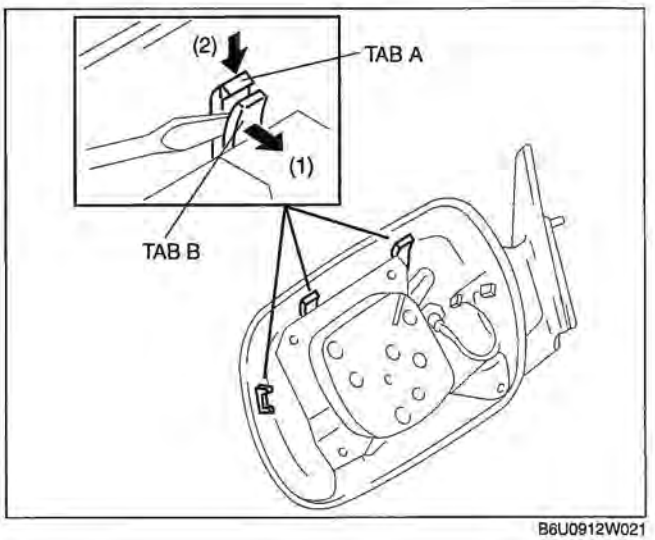

B6U0912W021

Outer Mirror Glass Assembly Note

1. Press the outer mirror into the base so that the pin does not dislodge.

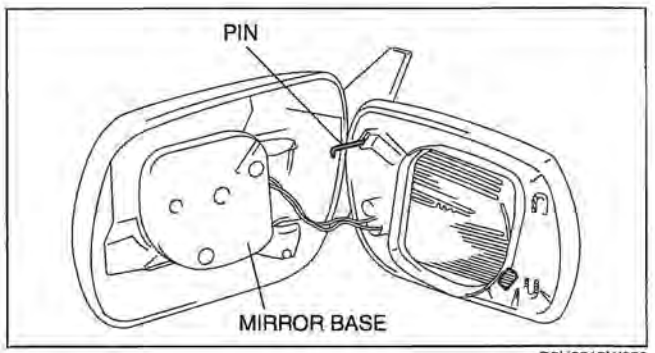

B6U0912W022

POWER OUTER MIRROR INSPECTION

E6U091269100W03

1. Disconnect the power outer mirror connector.
2. Apply battery positive voltage to the power outer mirror terminals, and inspect the operation of the power outer mirror.
   - If there is any malfunction, replace the power outer mirror.

Mirror operation	Terminal	
	B+	GND
Up	B	D
Down	D	B
Left	F	D
Right	D	F

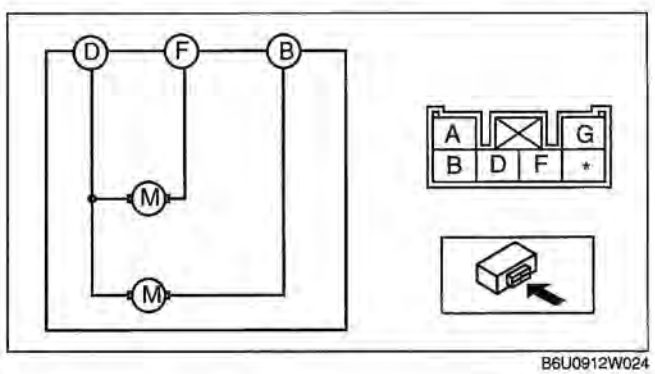

B6U0912W024

3. Inspect for continuity between the power outer mirror heater terminals.
   - If there is any malfunction, replace the power outer mirror.

O—O : Continuity

Mirror operation	Terminal	
	A	G
Heater	O——	——O

B6U0912W023

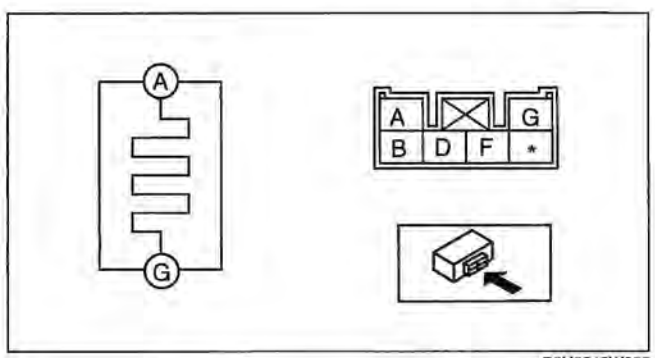

B6U0912W025

POWER OUTER MIRROR SWITCH REMOVAL/INSTALLATION

E6U091266600W01

Note
- The power outer mirror integrating the power window main switch.

1. Disconnect the negative battery cable.
2. Remove the driver-side front door trim. (See 09–17–12 FRONT DOOR TRIM REMOVAL/INSTALLATION.)
3. Remove the screws and the power outer mirror switch.
4. Install in the reverse order of removal.

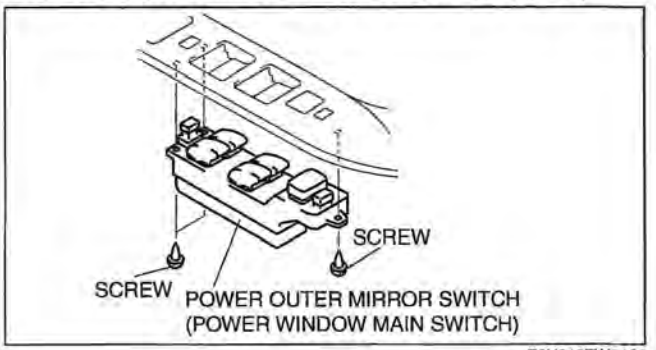

E6U912ZW5106

POWER OUTER MIRROR SWITCH INSPECTION

E6U091266600W02

1. Inspect for continuity between the power outer mirror switch terminals.
   - If there is any malfunction, replace the power window main switch.

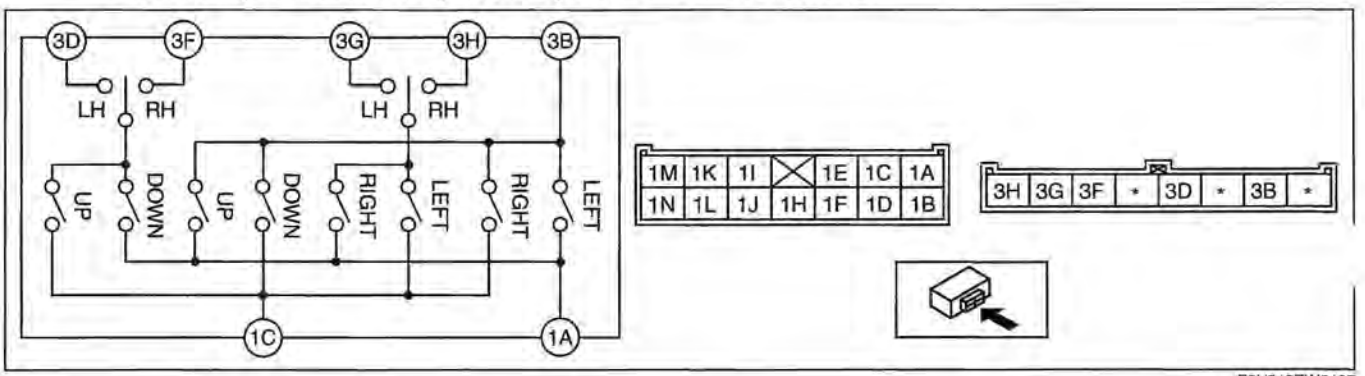

E6U912ZW5107

○—○ : Continuity

OPERATION		3D	3F	3G	3H	1C	1A	3B
LH	UP	○				○	○	○
	DOWN	○				○	○	○
	LEFT			○		○	○	○
	RIGHT			○		○	○	○
RH	UP		○			○	○	○
	DOWN		○			○	○	○
	LEFT				○	○	○	○
	RIGHT				○	○	○	○

E6U912ZW5108

REARVIEW MIRROR REMOVAL/INSTALLATION

E6U091269220W01

Auto-dimming Mirror

1. Disconnect the negative battery cable.
   Remove the cover.
3. Disconnect the auto-dimming mirror connector.
4. Remove the screw.
5. Remove the rearview mirror.
6. Install in the reverse order of removal.

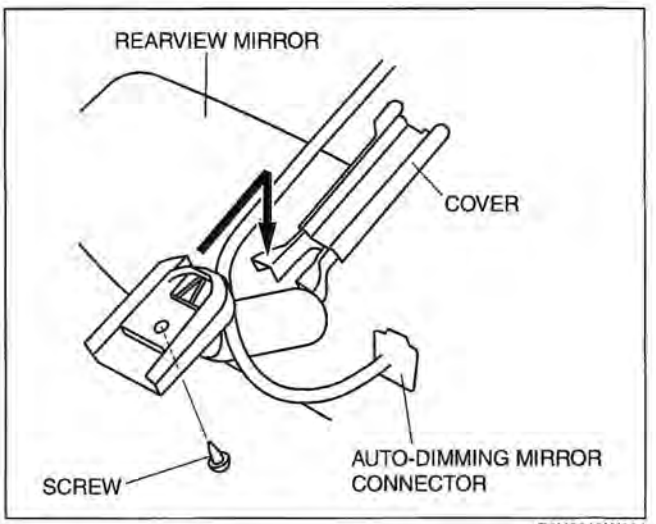

B6U0912W031

Normal Type

1. Pull the rearview mirror in the direction indicated by the arrow.
2. Install in the reverse order of removal.

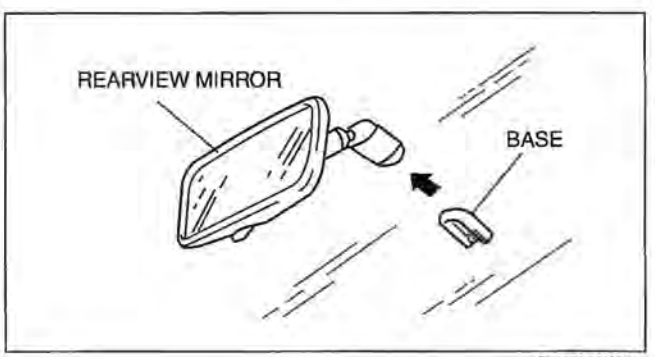

B6U0912W033

AUTO-DIMMING MIRROR INSPECTION

E6U091269220W02

1. Measure the voltage at each terminal (other than terminal F).
   - If the voltage is not as specified in the Terminal Voltage Table (Reference), inspect the parts under "Inspection item(s)" and related wiring harnesses.
2. Disconnect the negative battery cable.
3. Inspect the auto-dimming mirror connector for continuity at terminal F.
4. If the system does not work properly even though the inspection items or related wiring harnesses do not have any malfunction, replace the auto-dimming mirror.

Terminal Voltage Table (Reference)

AUTO-DIMMING MIRROR
HARNESS-SIDE CONNECTOR

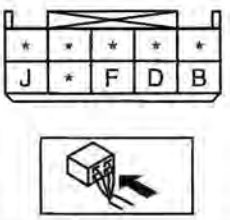

C6U912ZW001

Terminal	Signal name	Connected to	Measured condition	Voltage (V)/ Continuity	Inspection item(s)
B	Power supply	A/C 15 A fuse	Ignition switch at ON	B+	• A/C 15 A fuse • Related wiring harnesses
D	R range signal	Back-up light switch/TR switch	R range	B+	• Back-up light switch/TR switch • Related wiring harnesses
			Other than R range	1.0 or less	
F	GND	Body ground	Under any condition: Inspect for continuity to ground.	Continuity detected	• GND • Related wiring harnesses
J	Power supply	ROOM 15 A fuse	Under any condition	B+	• ROOM 15 A fuse • Related wiring harnesses

BASE REMOVAL

E6U091269220W03

1. Remove the rearview mirror.
2. Wind each end of a wire around a bar.

Warning

- **Using the SST (piano wire) with bare hands can cause injury. Always wear gloves when using the SST (piano wire).**

Note

- Use a long sawing action to spread the work over the whole length of the **SST** (piano wire) to prevent it from breaking.

3. Saw through the sealant to remove the base.

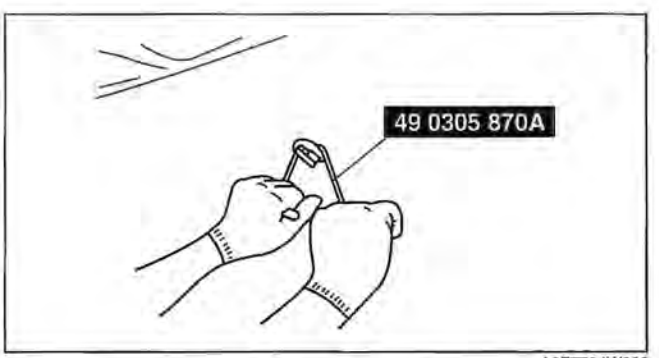

A6E7734W006

BASE INSTALLATION

E6U091269220W04

1. Cut away all of the original sealant using a razor.
2. Clean and degrease the ceramic coating on the glass and the base. Apply primer to the bonding area of the glass and the base.

Caution

- **Keep the area free of dirt and grease, and do not touch the surface. Otherwise, the primer may not properly bond to the surface of the glass.**

4. Apply a **3.0 mm {0.12 in}** layer of sealant to the base.

Note

- Use only glass primer on the glass, and body primer on the base. Allow the primer to dry for **approx. 30 min**.

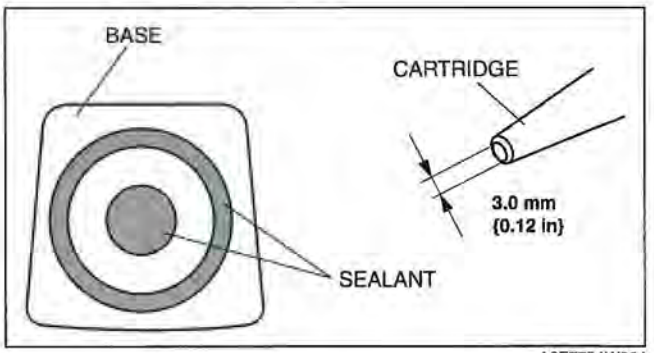

A6E7734W004

5. Center the base in the ceramic coating and press it onto the glass.
6. Use isopropyl alcohol to remove any excess repair sealant.

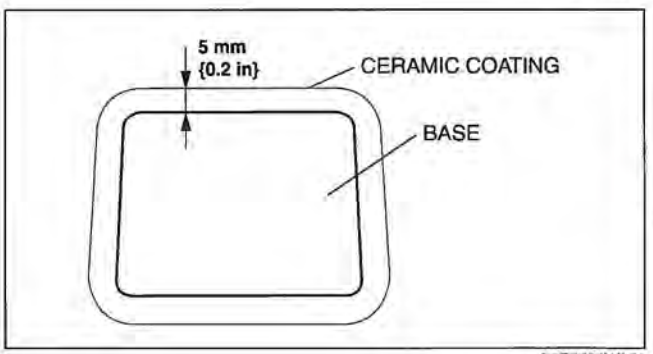

A6E7734W005

Hardening time of sealant

Temperature	Surface hardening time	Time required until vehicle can be put into service
5 °C {41 °F}	Approx. 1.5 h	Approx. 12 h
20 °C {68 °F}	Approx. 1 h	Approx. 4 h
35 °C {95 °F}	Approx. 10 min.	Approx. 2 h

7. Install the rearview mirror.

09–13 SEATS

LOCATION INDEX [L3 WITH TC] 09–13–2
LOCATION INDEX [EXCEPT L3 WITH TC] 09–13–3
FRONT SEAT REMOVAL/INSTALLATION [L3 WITH TC] 09–13–4
FRONT SEAT REMOVAL/INSTALLATION [EXCEPT L3 WITH TC] 09–13–5
FRONT SEAT DISASSEMBLY/ASSEMBLY [L3 WITH TC] 09–13–6
Driver's Seat (Normal Seat) 09–13–6
Driver's Seat (Power Seat) 09–13–7
Passenger's Seat 09–13–8
FRONT SEAT DISASSEMBLY/ASSEMBLY [EXCEPT L3 WITH TC] 09–13–9
Driver's Seat (Normal Seat) 09–13–10
Driver's Seat (Power Seat) 09–13–11
Passenger's Seat 09–13–12
REAR SEAT REMOVAL/INSTALLATION [MAZDASPEED6] 09–13–14
Rear Seat Cushion Removal Note 09–13–15
Rear Side Seat Removal Note 09–13–15
REAR SEAT REMOVAL/INSTALLATION [SPORT SEDAN] 09–13–16
Rear Seat Cushion Removal Note 09–13–16
Rear Side Seat Removal Note 09–13–17
REAR SEAT REMOVAL/INSTALLATION [5-DOOR, SPORT WAGON] 09–13–17
Remote wire removal note 09–13–18
Rear seat removal note 09–13–18
REAR SEAT DISASSEMBLY/ASSEMBLY [SPORT SEDAN, MAZDASPEED6] 09–13–19
REAR SEAT DISASSEMBLY/ASSEMBLY [5-DOOR, SPORT WAGON] 09–13–20
REMOTE HANDLE LEVER REMOVAL/INSTALLATION [SPORT SEDAN] 09–13–21
REMOTE HANDLE LEVER REMOVAL/INSTALLATION [5-DOOR, SPORT WAGON] 09–13–21
FRONT TILT MOTOR REMOVAL/INSTALLATION [L3 WITH TC] 09–13–22
Front Tilt Motor Removal Note 09–13–22
Front Tilt Motor Installation Note 09–13–23
FRONT TILT MOTOR INSPECTION [L3 WITH TC] 09–13–23
FRONT TILT MOTOR INSPECTION [EXCEPT L3 WITH TC] 09–13–24
REAR TILT MOTOR REMOVAL/INSTALLATION [L3 WITH TC] 09–13–24
Rear Tilt Motor Removal Note 09–13–24
Rear Tilt Motor Installation Note 09–13–25
REAR TILT MOTOR INSPECTION [L3 WITH TC] 09–13–26
REAR TILT MOTOR INSPECTION [EXCEPT L3 WITH TC] 09–13–26
SLIDE MOTOR INSPECTION [L3 WITH TC] 09–13–26
SLIDE MOTOR INSPECTION [EXCEPT L3 WITH TC] 09–13–26
RECLINER MOTOR REMOVAL/INSTALLATION [L3 WITH TC] 09–13–27
RECLINER MOTOR REMOVAL/INSTALLATION [EXCEPT L3 WITH TC] 09–13–27
RECLINER MOTOR INSPECTION [L3 WITH TC] 09–13–27
RECLINER MOTOR INSPECTION [EXCEPT L3 WITH TC] 09–13–28
POWER SEAT SWITCH INSPECTION 09–13–28
SEAT WARMER SWITCH REMOVAL/INSTALLATION 09–13–29
Seat Warmer Switch Removal Note 09–13–29
SEAT WARMER SWITCH INSPECTION 09–13–29
SEAT WARMER UNIT INSPECTION [L3 WITH TC] 09–13–30
Seat Cushion 09–13–30
Seat Back 09–13–31
SEAT WARMER UNIT INSPECTION [EXCEPT L3 WITH TC] 09–13–31
Seat Cushion 09–13–31
Seat Back 09–13–32

LOCATION INDEX [L3 WITH TC]

E6U091357000W01

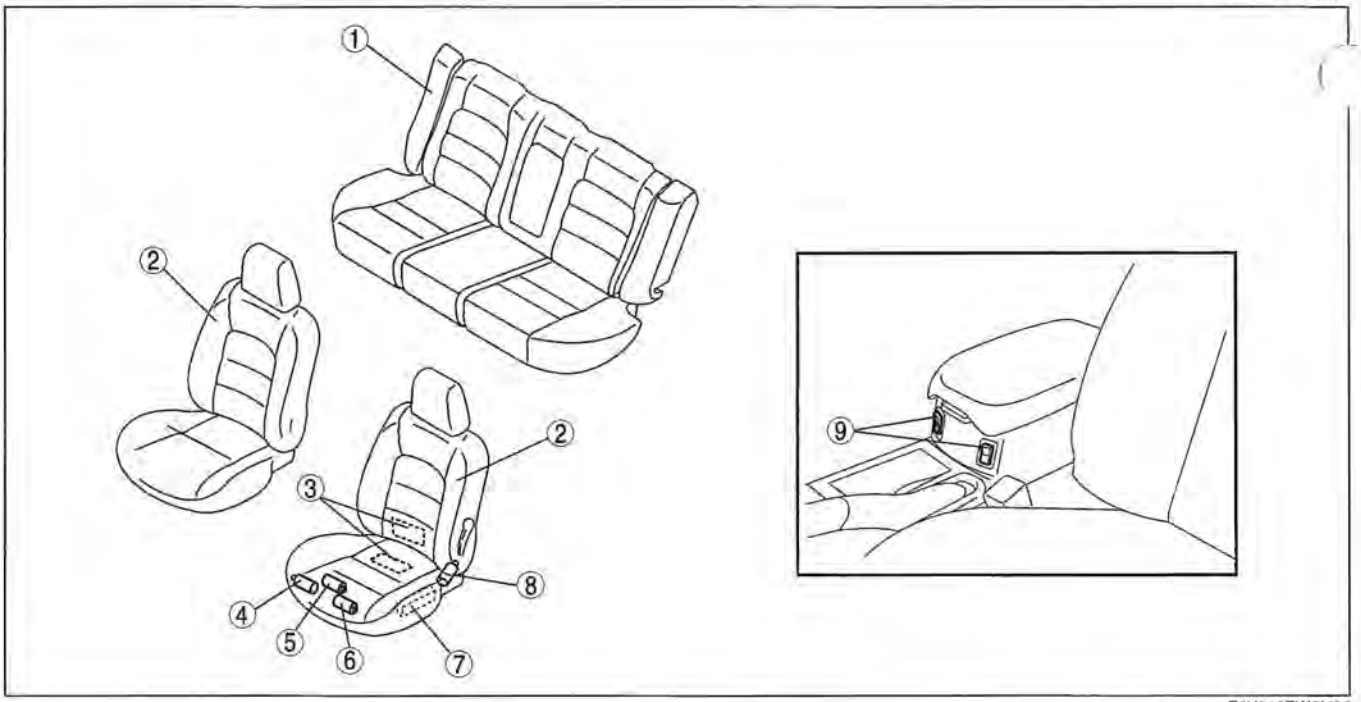

E6U913ZW6M00

1	• Rear seat [MAZDASPEED6] (See 09–13–14 REAR SEAT REMOVAL/ INSTALLATION [MAZDASPEED6]) (See 09–13–19 REAR SEAT DISASSEMBLY/ ASSEMBLY [SPORT SEDAN, MAZDASPEED6])
2	Front seat (See 09–13–4 FRONT SEAT REMOVAL/ INSTALLATION [L3 WITH TC]) (See 09–13–6 FRONT SEAT DISASSEMBLY/ ASSEMBLY [L3 WITH TC])
3	Seat warmer unit (See 09–13–30 SEAT WARMER UNIT INSPECTION [L3 WITH TC])
4	Rear tilt motor (See 09–13–24 REAR TILT MOTOR REMOVAL/ INSTALLATION [L3 WITH TC]) (See 09–13–26 REAR TILT MOTOR INSPECTION [L3 WITH TC])
5	Slide motor (See 09–13–26 SLIDE MOTOR INSPECTION [L3 WITH TC])
6	Front tilt motor (See 09–13–22 FRONT TILT MOTOR REMOVAL/ INSTALLATION [L3 WITH TC]) (See 09–13–23 FRONT TILT MOTOR INSPECTION [L3 WITH TC])
7	Power seat switch (See 09–13–28 POWER SEAT SWITCH INSPECTION)
8	Recliner motor (See 09–13–27 RECLINER MOTOR REMOVAL/ INSTALLATION [L3 WITH TC]) (See 09–13–27 RECLINER MOTOR INSPECTION [L3 WITH TC])
9	Seat warmer switch (See 09–13–29 SEAT WARMER SWITCH REMOVAL/INSTALLATION) (See 09–13–29 SEAT WARMER SWITCH INSPECTION)

LOCATION INDEX [EXCEPT L3 WITH TC]

E6U091357000W02

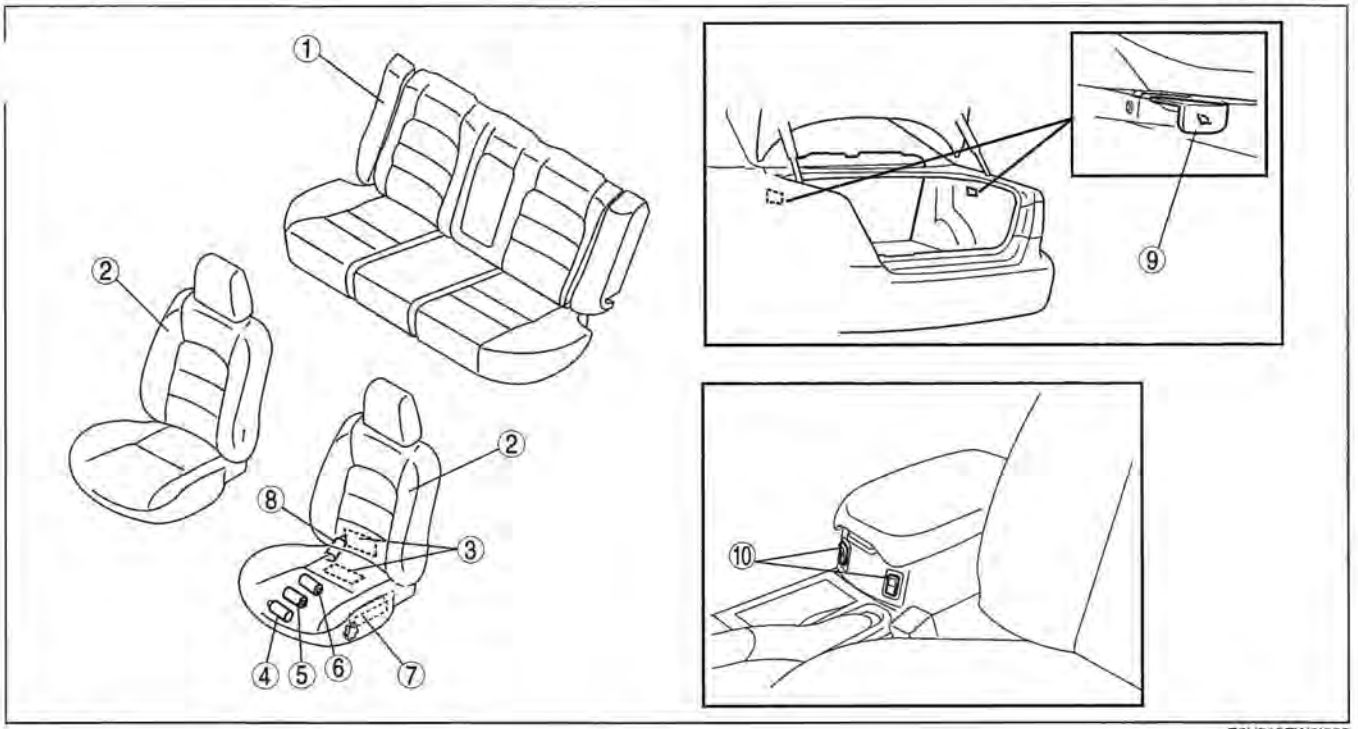

E6U913ZW6I003

1	• Rear seat [Sport Sedan, MAZDASPEED6] (See 09–13–16 REAR SEAT REMOVAL/ INSTALLATION [SPORT SEDAN]) (See 09–13–19 REAR SEAT DISASSEMBLY/ ASSEMBLY [SPORT SEDAN, MAZDASPEED6]) • Rear seat [5-Door, Sport Wagon] (See 09–13–17 REAR SEAT REMOVAL/ INSTALLATION [5-DOOR, SPORT WAGON]) (See 09–13–20 REAR SEAT DISASSEMBLY/ ASSEMBLY [5-DOOR, SPORT WAGON])
2	Front seat (See 09–13–5 FRONT SEAT REMOVAL/ INSTALLATION [EXCEPT L3 WITH TC]) (See 09–13–9 FRONT SEAT DISASSEMBLY/ ASSEMBLY [EXCEPT L3 WITH TC])
3	Seat warmer unit (See 09–13–31 SEAT WARMER UNIT INSPECTION [EXCEPT L3 WITH TC])
4	Slide motor (See 09–13–26 SLIDE MOTOR INSPECTION [EXCEPT L3 WITH TC])
5	Front tilt motor (See 09–13–24 FRONT TILT MOTOR INSPECTION [EXCEPT L3 WITH TC])
6	Rear tilt motor (See 09–13–26 REAR TILT MOTOR INSPECTION [EXCEPT L3 WITH TC])
7	Power seat switch (See 09–13–28 POWER SEAT SWITCH INSPECTION)
8	Recliner motor (See 09–13–27 RECLINER MOTOR REMOVAL/ INSTALLATION [EXCEPT L3 WITH TC]) (See 09–13–28 RECLINER MOTOR INSPECTION [EXCEPT L3 WITH TC])
9	Remote handle lever (See 09–13–21 REMOTE HANDLE LEVER REMOVAL/INSTALLATION [SPORT SEDAN]) (See 09–13–21 REMOTE HANDLE LEVER REMOVAL/INSTALLATION [5-DOOR, SPORT WAGON])
10	Seat warmer switch (See 09–13–29 SEAT WARMER SWITCH REMOVAL/INSTALLATION) (See 09–13–29 SEAT WARMER SWITCH INSPECTION)

FRONT SEAT REMOVAL/INSTALLATION [L3 WITH TC]

E6U091357100W01

Warning

- **Handling the front seat (with a side air bag) improperly can accidentally deploy the side air bag, which may seriously injure you. Read AIR BAG SYSTEM SERVICE WARNINGS before handling th front seat (with a side air bag). (See 08–10–3 SERVICE WARNINGS.)**

Caution

- **When the passenger's seat is removed, perform the seat weight sensor inspection using the WDS or equivalent after installing the passenger's seat. (See 08–10–15 SEAT WEIGHT SENSOR INSPECTION.)**
- **When the passenger's seat is replaced with a new one, perform the seat weight sensor calibration using the WDS or equivalent. (See 08–10–14 SEAT WEIGHT SENSOR CALIBRATION.)**

1. Turn the ignition switch to the LOCK position.
2. Disconnect the negative battery cable and wait for **more than 1 minute**.
3. Remove in the order indicated in the table.

1	Cover
2	Front seat
3	Connector

4. Install in the reverse order of removal.

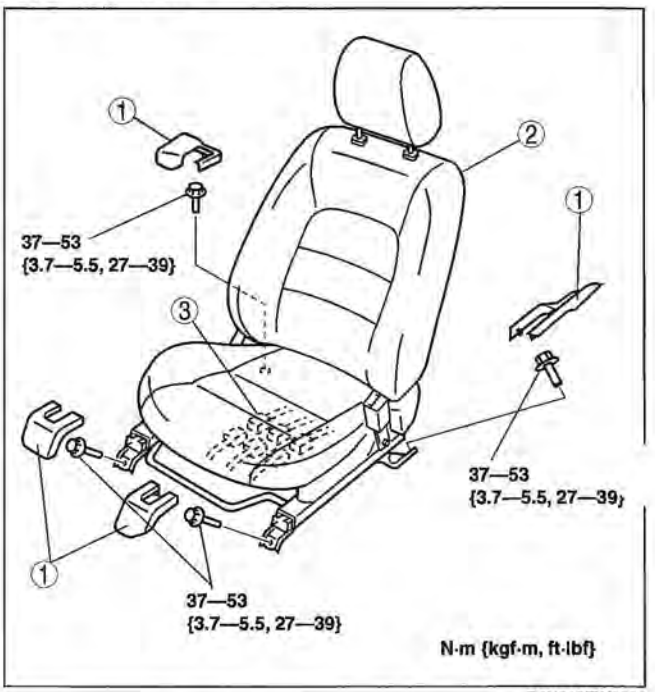

D6U913ZW7002

FRONT SEAT REMOVAL/INSTALLATION [EXCEPT L3 WITH TC]

E6U091357100W03

Warning

- **Handling the front seat (with a side air bag) improperly can accidentally deploy the side air bag, which may seriously injure you. Read air bag system service warnings and cautions before handling the front seat (with a side air bag). (See 08–10–3 SERVICE WARNINGS.) (See 08–10–5 SERVICE CAUTIONS.)**

Caution

- **When the passenger's seat is removed, perform the seat weight sensor inspection using the WDS or equivalent after installing the passenger's seat. (See 08–10–15 SEAT WEIGHT SENSOR INSPECTION.)**
- **When the passenger's seat is replaced with a new one, perform the seat weight sensor calibration using the WDS or equivalent. (See 08–10–14 SEAT WEIGHT SENSOR CALIBRATION.)**

1. Turn the ignition switch to the LOCK position.
2. Disconnect the negative battery cable and wait for **more than 1 minute**.
3. Remove the seat belt anchor (passenger's side). (See 08–11–3 FRONT SEAT BELT REMOVAL/INSTALLATION.)
4. Remove in the order indicated in the table.

1	Cover
2	Front seat
3	Connector

5. Install in the reverse order of removal.

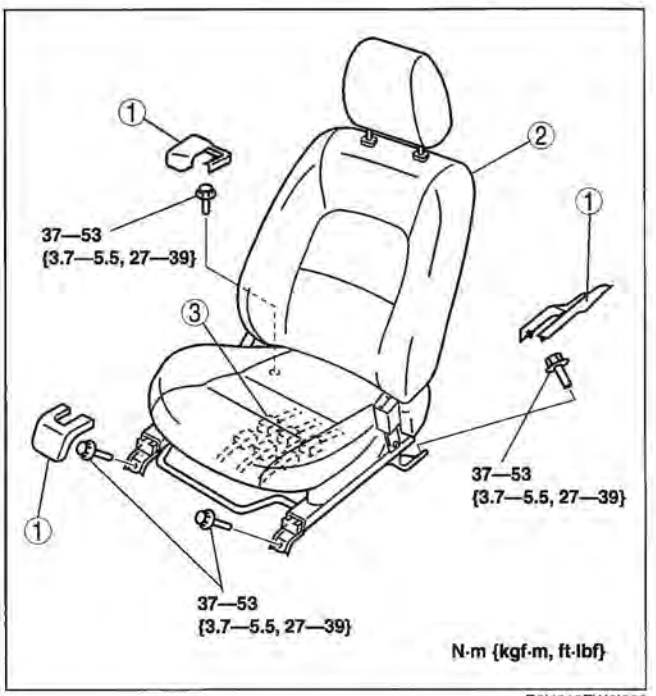

E6U913ZW6I009

FRONT SEAT DISASSEMBLY/ASSEMBLY [L3 WITH TC]

E6U091357100W02

Warning

- **Handling the front seat (with a side air bag) improperly can accidentally deploy the side air bag, which may seriously injure you. Read AIR BAG SYSTEM SERVICE WARNINGS before handling th. front seat (with a side air bag). (See 08–10–3 SERVICE WARNINGS.)**

Caution

- **If any of the following work is performed, perform the seat weight sensor calibration using the WDS or equivalent. (See 08–10–14 SEAT WEIGHT SENSOR CALIBRATION.)**
  - **— Replacement with a new seat weight sensor**
  - **— Replacement with a new seat weight sensor control module**
  - **— Replacement with new passenger-side seat parts**
  - **— Disassembly of the passenger-side seat**
- **If any of the following work is performed, perform the seat weight sensor inspection using the WDS or equivalent. (See 08–10–15 SEAT WEIGHT SENSOR INSPECTION.)**
  - **— Removal of the passenger-side seat**
  - **— Loosening and retightening of passenger's seat fixing bolts**

1. Disconnect the negative battery cable and wait for **more than 1 minute**.
2. Remove the side air bag module. (See 08–10–8 SIDE AIR BAG MODULE REMOVAL/INSTALLATION.)
3. Disassemble in the order indicated in the table.
4. Assemble in the reverse order of disassembly.

Driver's Seat (Normal Seat)

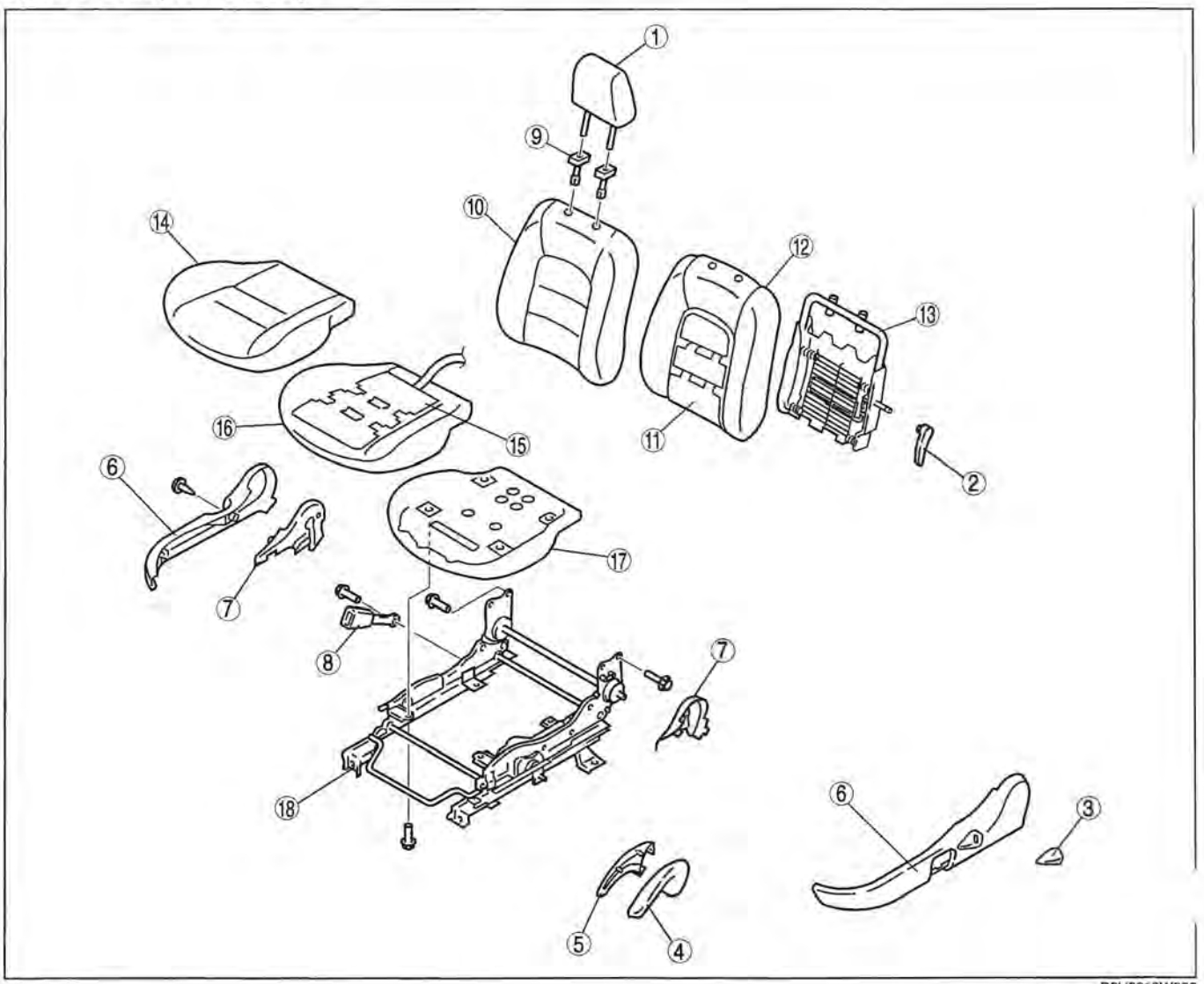

B6U0913W006

1	Headrest
2	Lumber support lever (See 09–13–9 Lumber support lever disassembly note.)
3	Recliner lever
4	Outer lift lever
5	Inner lift lever
6	Side cover (See 09–13–9 Side cover disassembly note.)
7	Reverse cover
8	Front buckle

9	Pole guide
10	Seat back trim
11	Seat warmer unit
12	Seat back pad
13	Seat back frame
14	Seat cushion trim
15	Seat warmer unit
16	Seat cushion pad
17	Seat cushion frame
18	Slide adjuster

Driver's Seat (Power Seat)

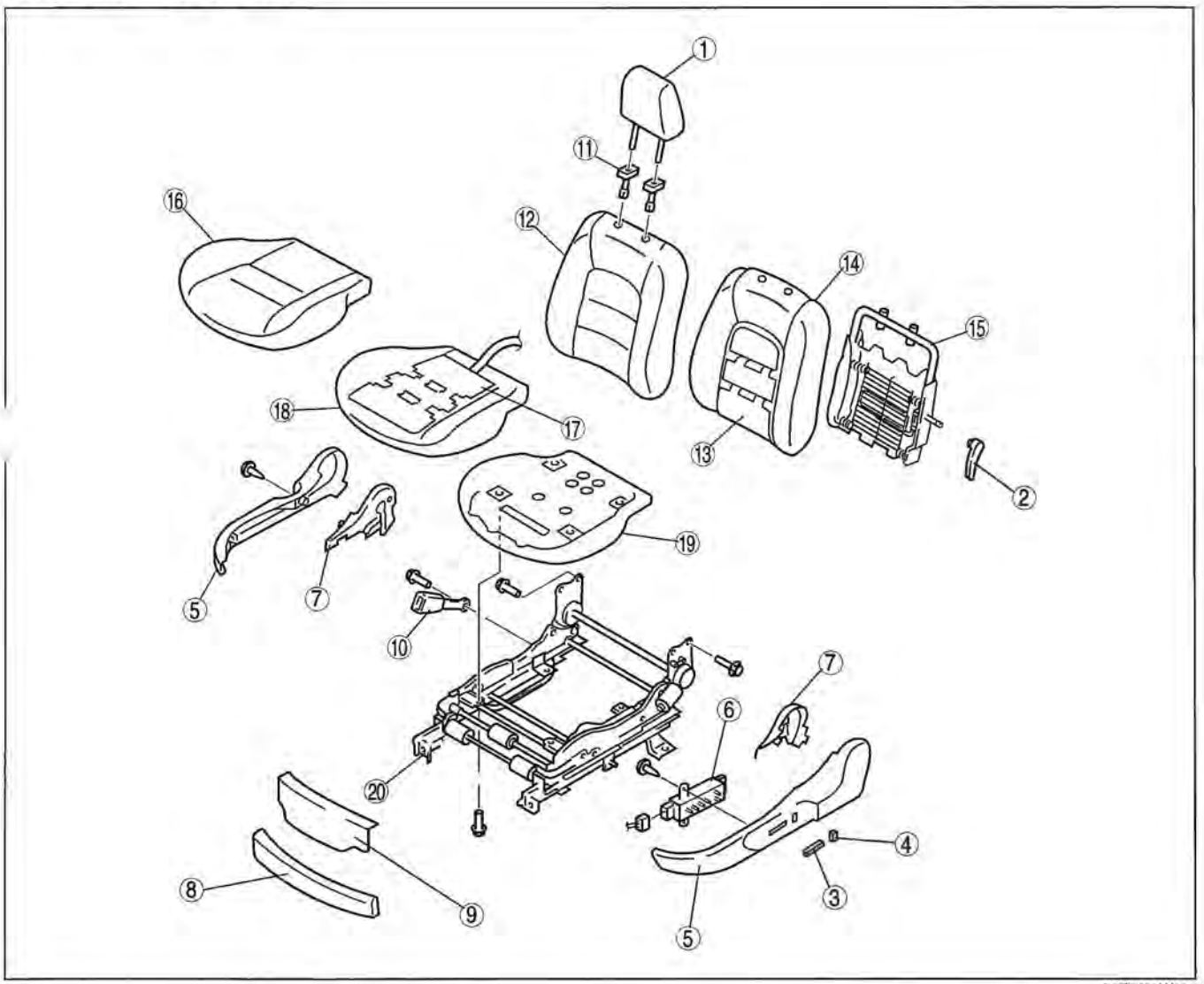

A6E7752W027

1	Headrest
2	Lumber support lever (See 09–13–9 Lumber support lever disassembly note.)
3	Slider and lifter switch knob
4	Recliner switch knob
5	Side cover (See 09–13–9 Side cover disassembly note.)
6	Power seat switch

7	Reverse cover
8	Front cover No. 1
9	Front cover No. 2
10	Front buckle
11	Pole guide
12	Seat back trim
13	Seat warmer unit
14	Seat back pad
15	Seat back frame

16	Seat cushion trim
17	Seat warmer unit
18	Seat cushion pad

19	Seat cushion frame
20	Slide adjuster

Passenger's Seat

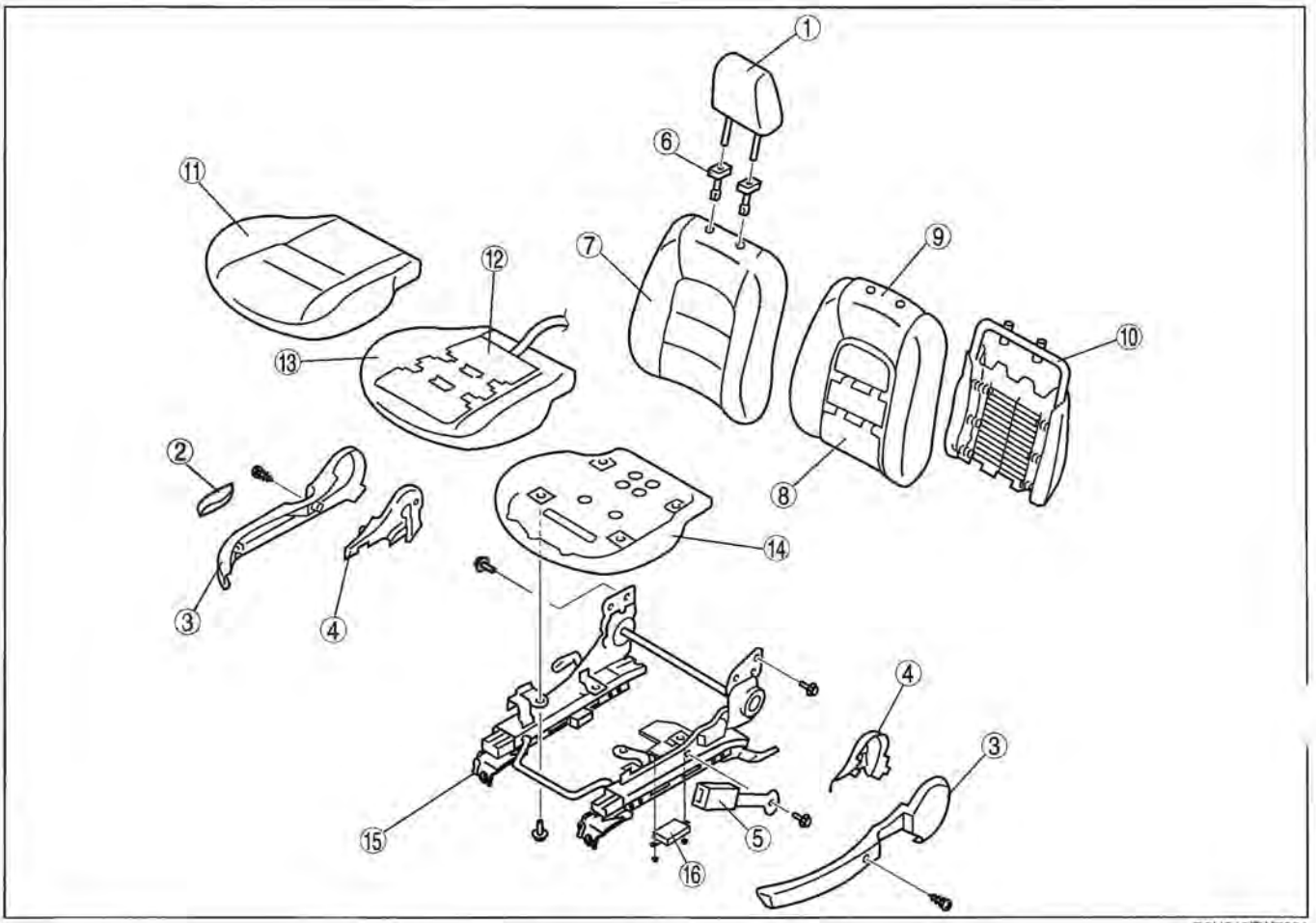

D6U913ZW7001

1	Headrest
2	Recliner lever
3	Side cover (See 09–13–9 Side cover disassembly note.)
4	Reverse cover
5	Front buckle
6	Pole guide
7	Seat back trim
8	Seat warmer unit

9	Seat back pad
10	Seat back frame
11	Seat cushion trim
12	Seat warmer unit
13	Seat cushion pad
14	Seat cushion frame
15	Slide adjuster
16	Seat weight sensor control module

Lumber support lever disassembly note

1. Remove the pin from the lumber support lever installation part with rag.

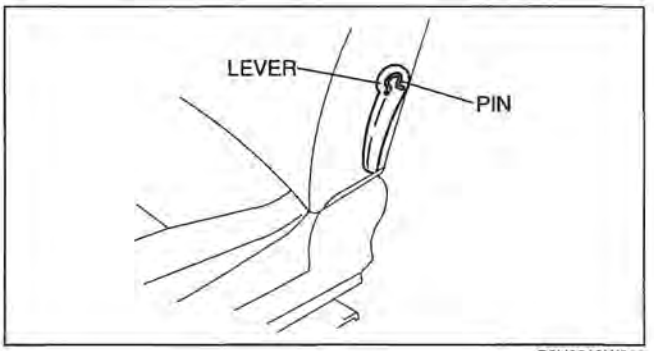

B6U0913W008

Side cover disassembly note

1. Remove the screws.
2. Disengage clips A.
3. Lift the side cover up in the direction of the arrow, then unhook it from slide adjuster.

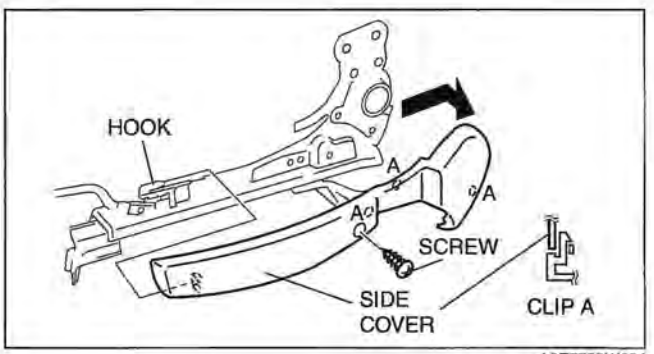

A6E7752W004

FRONT SEAT DISASSEMBLY/ASSEMBLY [EXCEPT L3 WITH TC]

E6U091357100W04

Warning

- **Handling the front seat (with a side air bag) improperly can accidentally deploy the side air bag, which may seriously injure you. Read air bag system service warnings and cautions before handling the front seat (with a side air bag). (See 08–10–3 SERVICE WARNINGS.) (See 08–10–5 SERVICE CAUTIONS.)**

Caution

- **If any of the following work is performed, perform the seat weight sensor calibration using the WDS or equivalent. (See 08–10–14 SEAT WEIGHT SENSOR CALIBRATION.)**
  - **— Replacement with a new seat weight sensor**
  - **— Replacement with a new seat weight sensor control module**
  - **— Replacement with new passenger-side seat parts**
  - **— Disassembly of the passenger-side seat**
- **If any of the following work is performed, perform the seat weight sensor inspection using the WDS or equivalent. (See 08–10–15 SEAT WEIGHT SENSOR INSPECTION.)**
  - **— Removal of the passenger-side seat**
  - **— Loosening and retightening of passenger's seat fixing bolts**

1. Disconnect the negative battery cable and wait for **more than 1 minute**.
2. Remove the side air bag module. (See 08–10–8 SIDE AIR BAG MODULE REMOVAL/INSTALLATION.)
3. Disassemble in the order indicated in the table.
4. Assemble in the reverse order of disassembly.

Driver's Seat (Normal Seat)

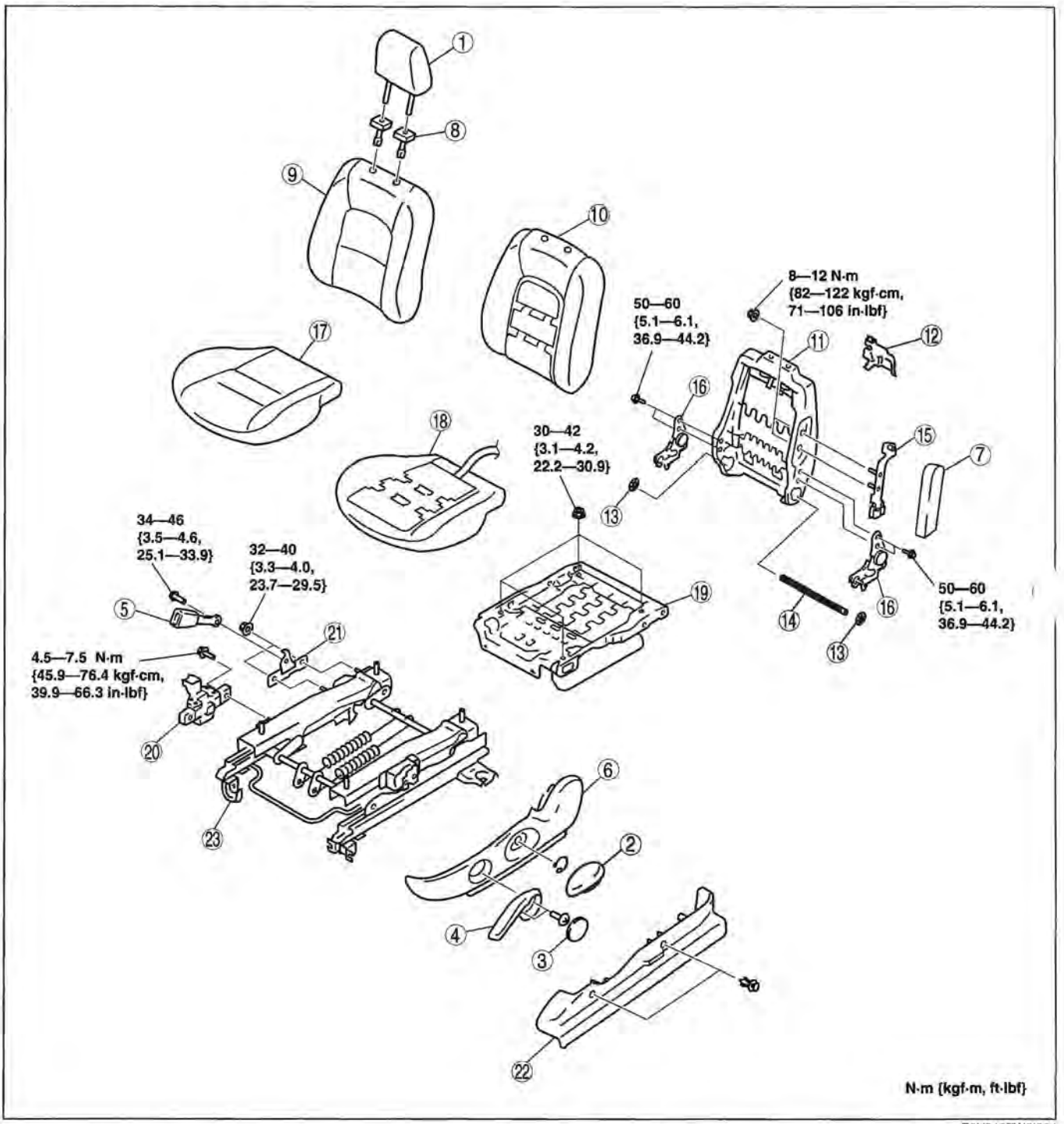

E6U913ZW6I004

1	Headrest (See 09–13–13 Headrest disassembly note)
2	Recliner lever
3	Lift lever cover
4	Lift lever
5	Front buckle

6	Side cover (See 09–13–13 Side cover disassembly note)
7	Side air bag module (See 08–10–8 SIDE AIR BAG MODULE REMOVA INSTALLATION)
8	Pole guide
9	Seat back trim

10	Seat back pad
11	Seat back frame
12	Harness protector
3	Washer
14	Recliner shaft
15	Bracket
16	Recliner knuckle

17	Seat cushion trim
18	Seat cushion pad
19	Seat cushion frame
20	Seat track position sensor
21	Seat belt buckle bracket
22	Rail cover
23	Slide adjuster

Driver's Seat (Power Seat)

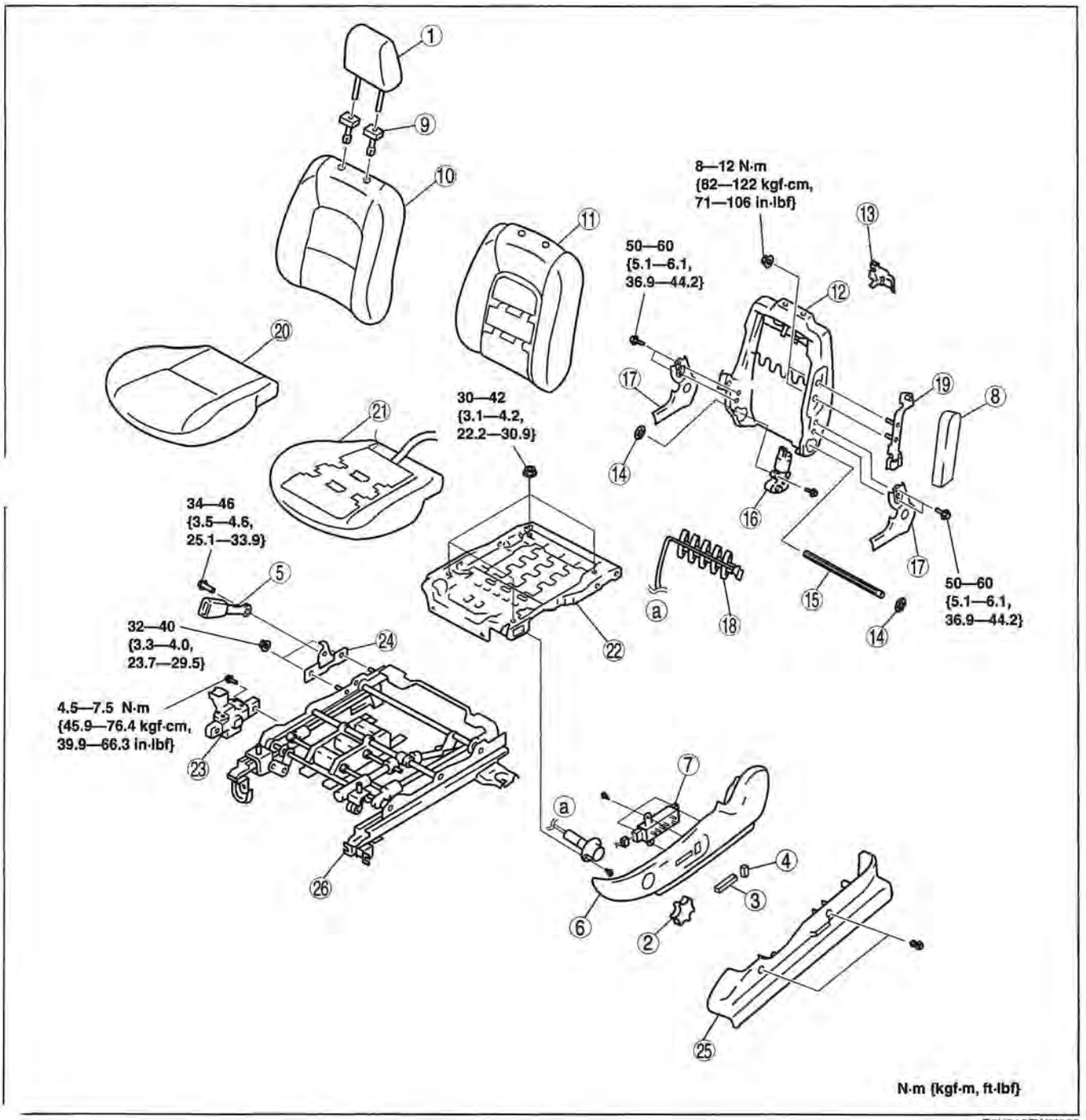

E6U913ZW6I005

1	Headrest (See 09–13–13 Headrest disassembly note)
2	Lumber support dial
3	Slider and lifter switch knob

4	Recliner switch knob
5	Front buckle
6	Side cover (See 09–13–13 Side cover disassembly note)

7	Power seat switch
8	Side air bag module (See 08–10–8 SIDE AIR BAG MODULE REMOVAL/ INSTALLATION)
9	Pole guide
10	Seat back trim
11	Seat back pad
12	Seat back frame
13	Harness protector
14	Washer
15	Recliner motor shaft
16	Recliner motor

17	Recliner knuckle
18	Lumber support
19	Bracket
20	Seat cushion trim
21	Seat cushion pad
22	Seat cushion frame
23	Seat track position sensor
24	Seat belt buckle bracket
25	Rail cover
26	Slide adjuster

Passenger's Seat

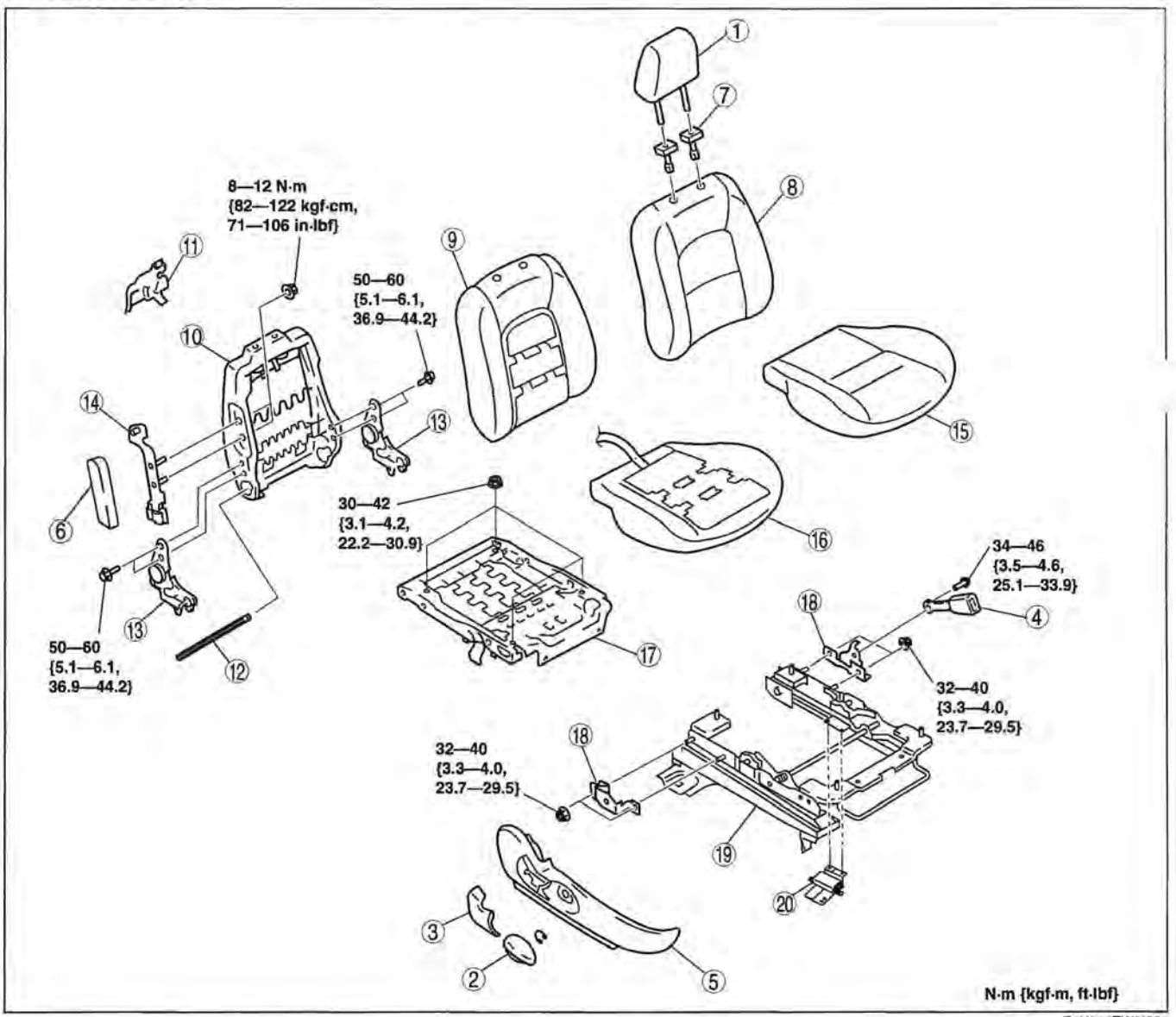

E6U913ZW6I006

1	Headrest (See 09–13–13 Headrest disassembly note)
2	Recliner lever
3	Anchor cover (See 09–13–13 Anchor cover disassembly note)
4	Front buckle

5	Side cover (See 09–13–13 Side cover disassembly note)
6	Side air bag module (See 08–10–8 SIDE AIR BAG MODULE REMOVAL/ INSTALLATION)
7	Pole guide

8	Seat back trim
9	Seat back pad
10	Seat back frame
11	Harness protector
12	Recliner shaft
13	Recliner knuckle
14	Bracket

15	Seat cushion trim
16	Seat cushion pad
17	Seat cushion frame
18	Seat belt buckle bracket
19	Slide adjuster
20	Seat weight sensor control module (See 08–10–13 SEAT WEIGHT SENSOR CONTROL MODULE REMOVAL/INSTALLATION [EXCEPT L3 WITH TC])

Headrest disassembly note

1. Insert a wire as shown in the figure and remove the headrest in the direction shown by the arrow.

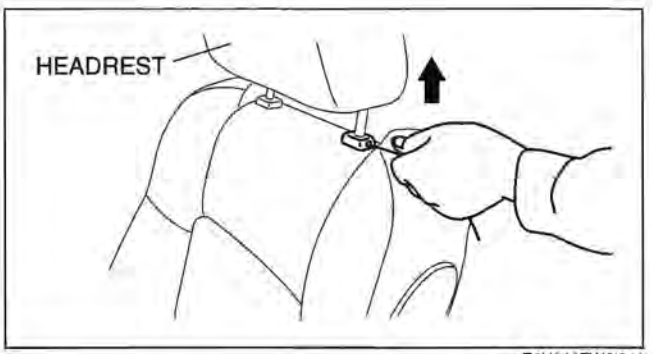

E6U913ZW6I010

Side cover disassembly note

1. Remove the clips A and B.
2. Lift the side cover up in the direction of the arrow, then unhook slide adjuster.

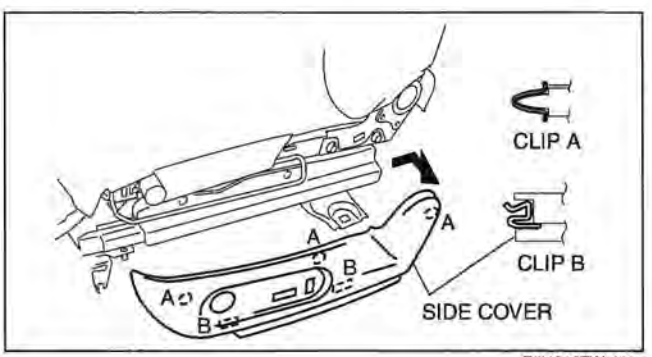

E6U913ZW6I007

Anchor cover disassembly note

1. Remove the pins A and clips B from the side cover using a tape-wrapped flathead screwdriver.
2. Lift the anchor cover up in the direction of the arrow and remove it from the side cover.

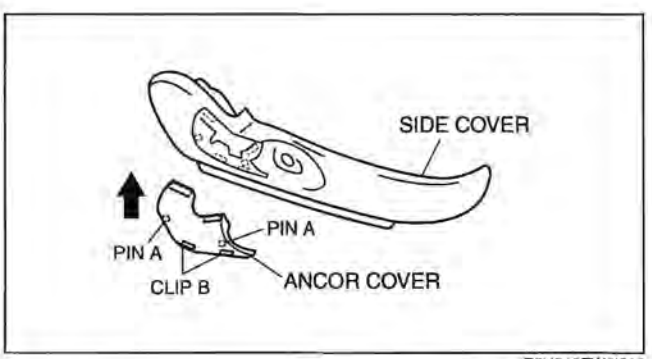

E6U913ZW6I011

REAR SEAT REMOVAL/INSTALLATION [MAZDASPEED6]

E6U091357200W07

1. Remove the partition board. (See 09–17–19 PARTITION BOARD REMOVAL/INSTALLATION.)
2. Release the remote catch.
   (1) Insert a flathead screwdriver into the hole A.
   (2) Move the flathead screwdriver towards the out side of the vehicle.
3. Remove in the order indicated in the table.

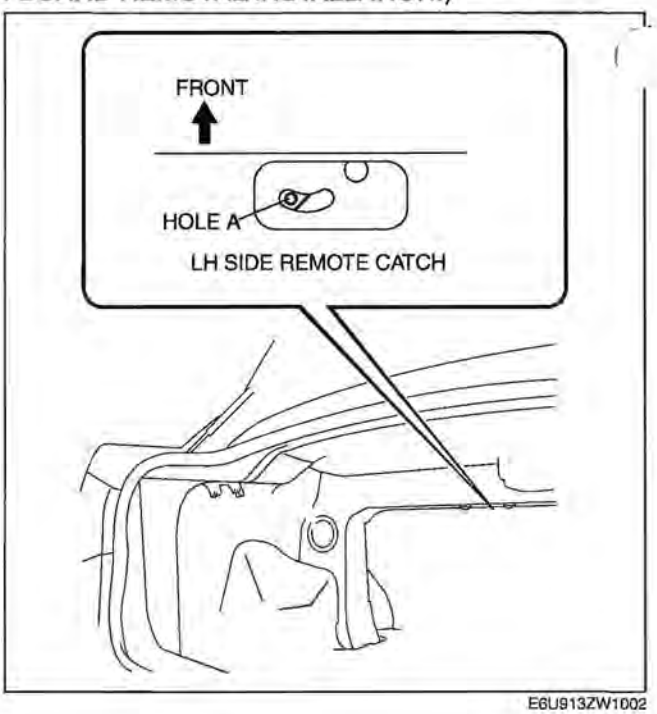

E6U913ZW1002

4. Install in the reverse order of removal.

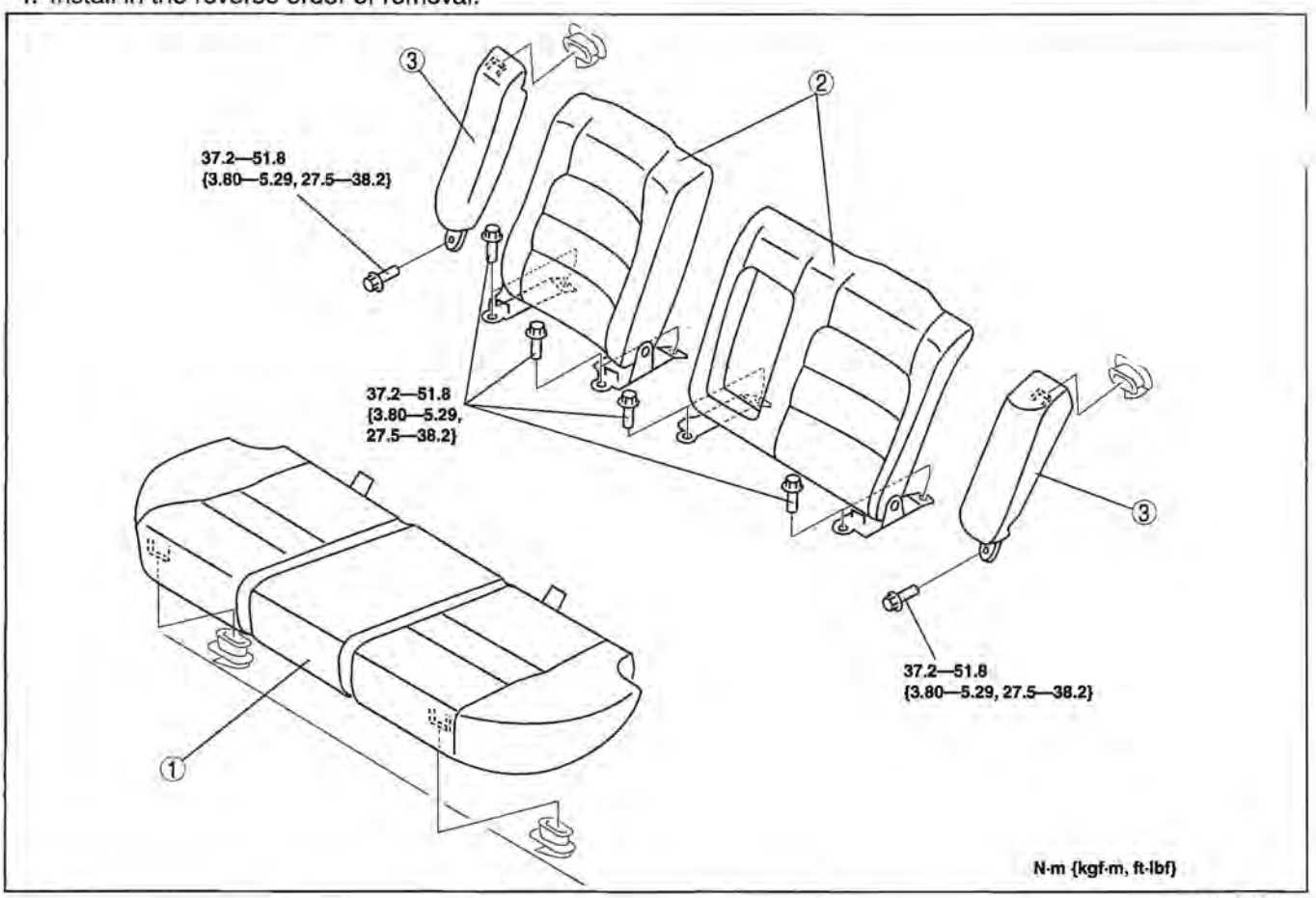

C6U0913W1

1	Rear seat cushion (See 09–13–15 Rear Seat Cushion Removal Note)
2	Rear seat back
3	Rear side seat (See 09–13–15 Rear Side Seat Removal Note)

Rear Seat Cushion Removal Note

1. Remove the rear seat cushion while pushing the lever in the direction of the arrow.

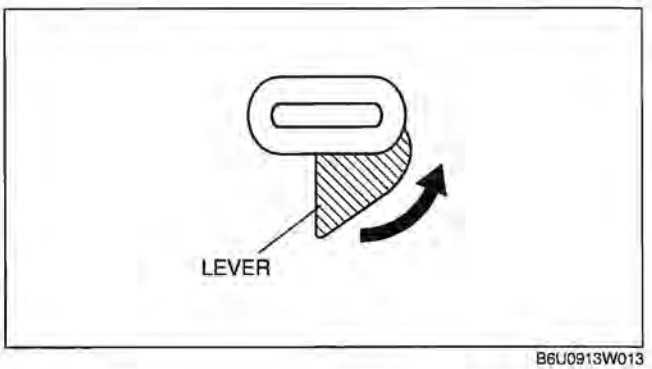

B6U0913W013

Rear Side Seat Removal Note

1. Partially peel back the trunk side trim.
2. Remove the rear side seat while pushing the lever in the direction of the arrow.

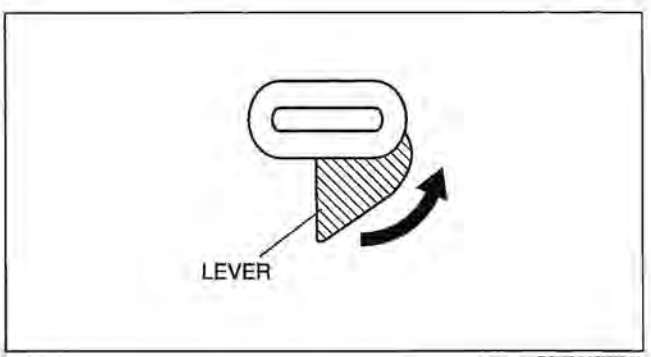

B6U0913W013

REAR SEAT REMOVAL/INSTALLATION [SPORT SEDAN]

E6U091357200W01

1. Remove in the order indicated in the table.
2. Install in the reverse order of removal.

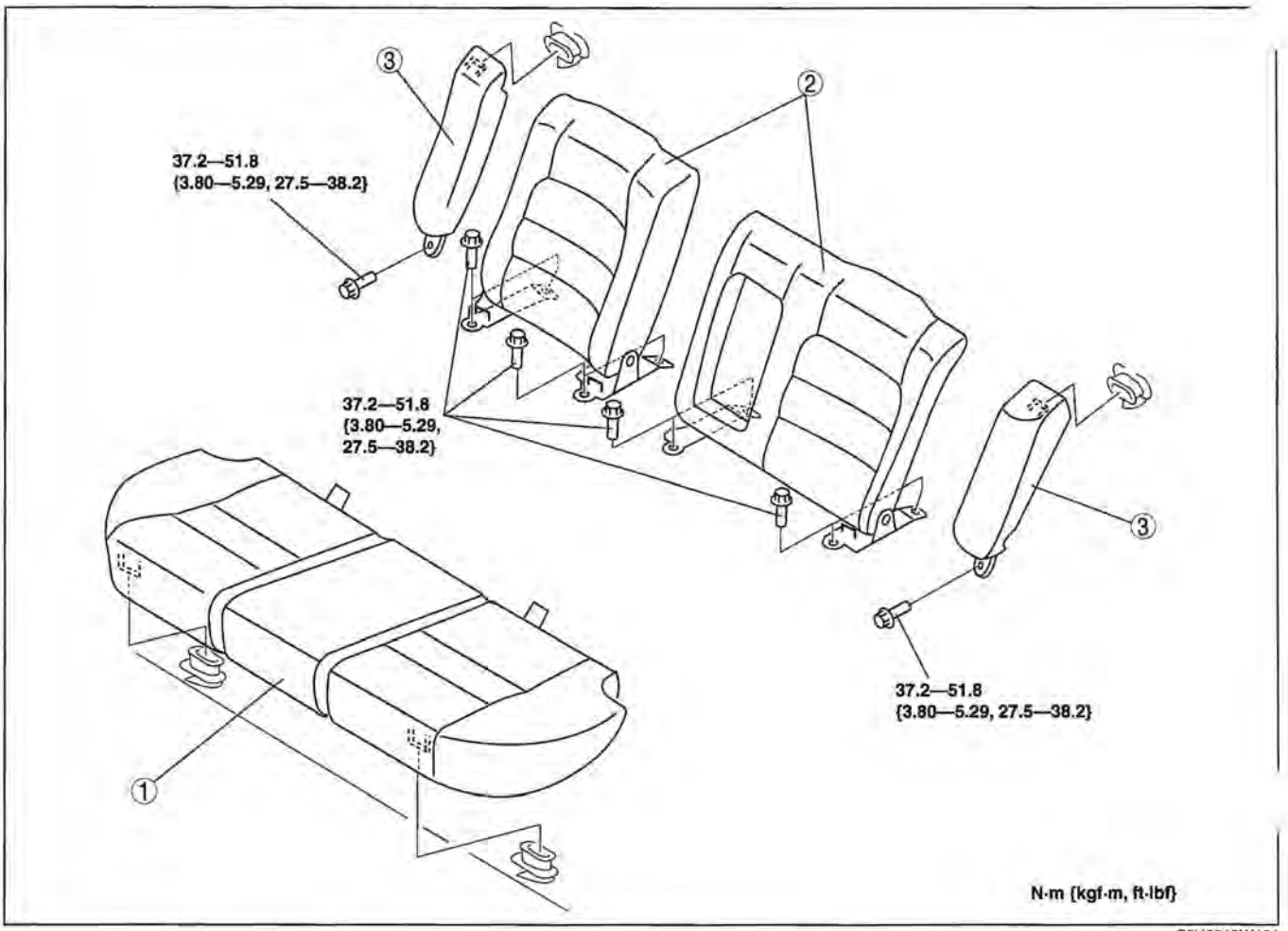

C8U0913W101

1	Rear seat cushion (See 09–13–16 Rear Seat Cushion Removal Note)
2	Rear seat back

3	Rear side seat (See 09–13–17 Rear Side Seat Removal Note)

Rear Seat Cushion Removal Note

1. Remove the rear seat cushion while pushing the lever in the direction of the arrow.

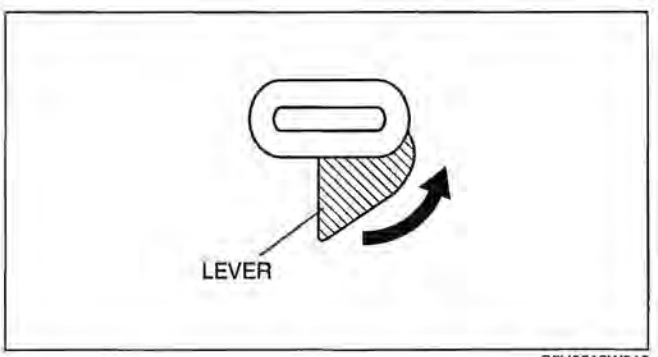

B6U0913W013

Rear Side Seat Removal Note

1. Partially peel back the trunk side trim.
2. Remove the rear side seat while pushing the lever in the direction of the arrow.

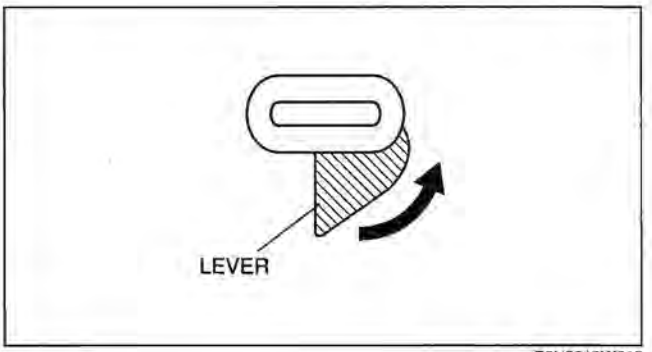

B6U0913W013

REAR SEAT REMOVAL/INSTALLATION [5-DOOR, SPORT WAGON]

E6U091357200W02

1. Remove in the order indicated in the table.
2. Install in the reverse order of removal.

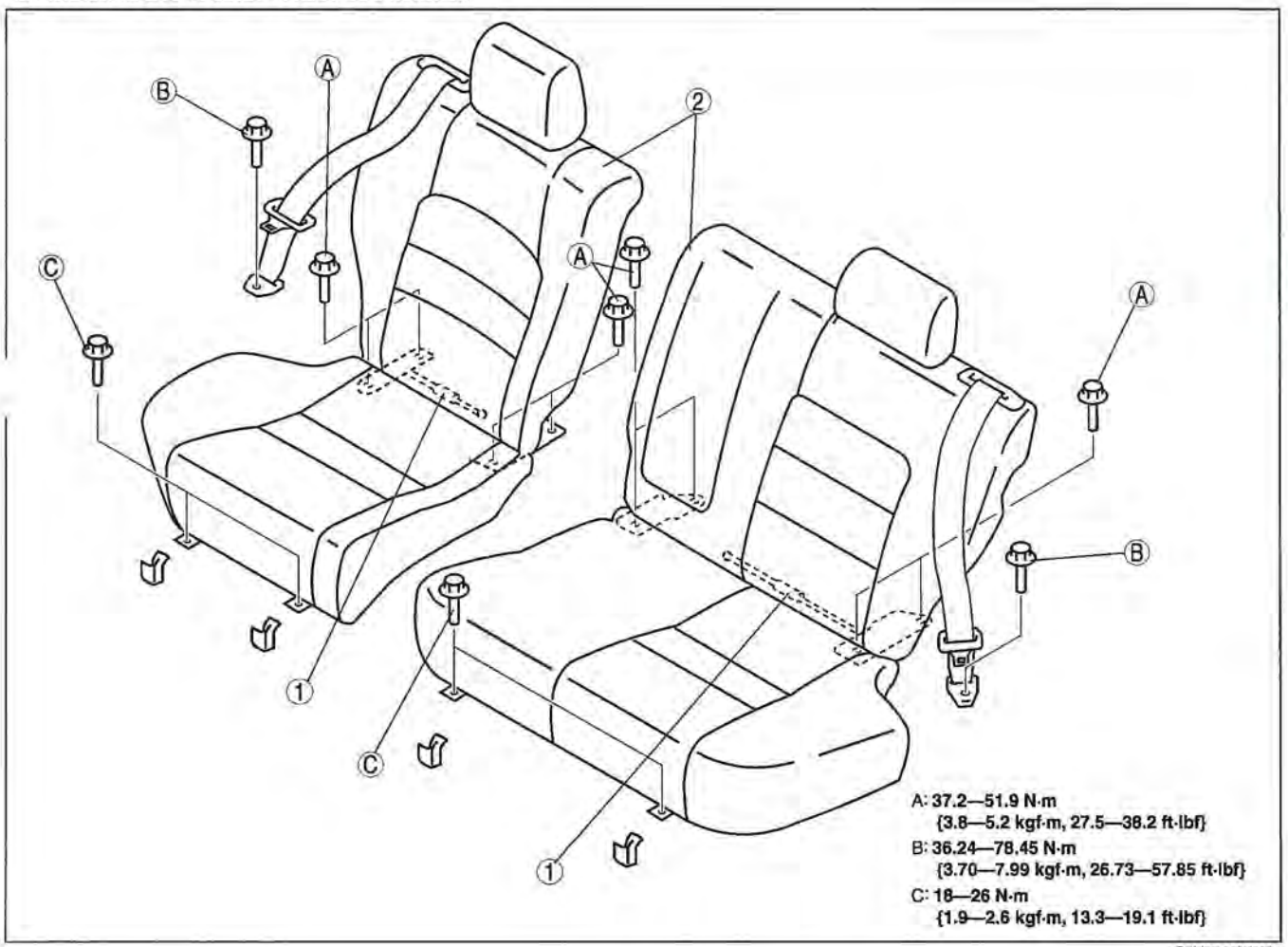

C6U0913WM01

1	Remote wire (See 09–13–18 Remote wire removal note.)
2	Rear seat (See 09–13–18 Rear seat removal note.)

Remote wire removal note

1. Turn over the trunk floor mat.
2. Remove the case.
3. Remove the remote wire.

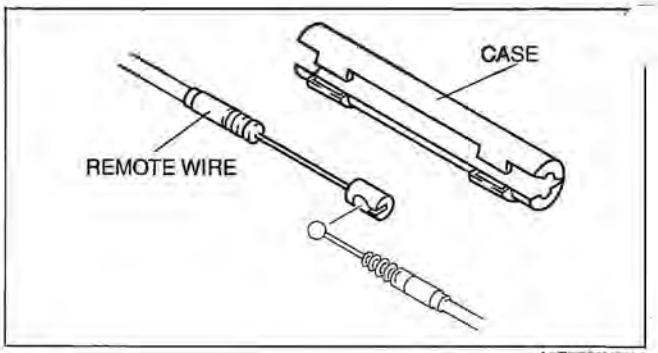

A6E7752W014

Rear seat removal note

1. Remove the front hinge installation bolts.
2. Lift the rear seat cushion, then remove the rear hinge installation bolts.

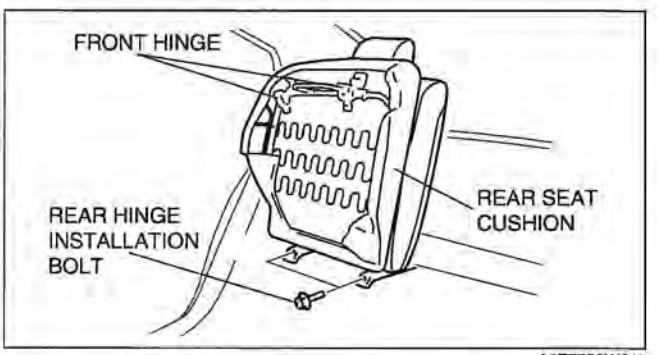

A6E7752W01

REAR SEAT DISASSEMBLY/ASSEMBLY [SPORT SEDAN, MAZDASPEED6]

E6U091357200W03

1. Disassemble in the order indicated in the table.
2. Assemble in the reverse order of disassembly.

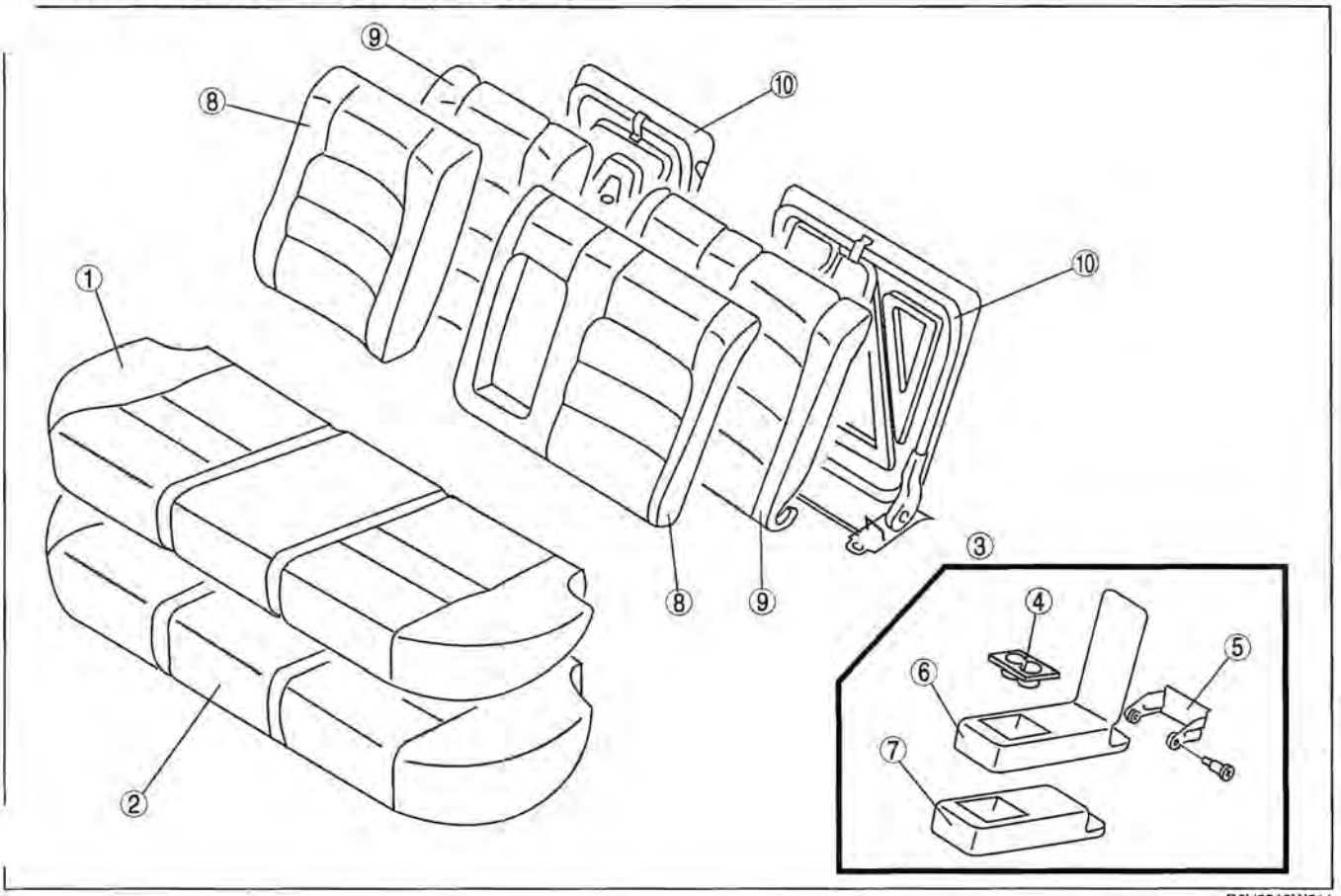

B6U0913W011

1	Seat cushion trim
2	Seat cushion pad
3	Armrest
4	Cup holder
5	Armrest hinge

6	Armrest trim
7	Armrest pad
8	Seat back trim
9	Seat back pad
10	Seat back frame

REAR SEAT DISASSEMBLY/ASSEMBLY [5-DOOR, SPORT WAGON]

E6U091357200W04

1. Disassemble in the order indicated in the table.
2. Assemble in the reverse order of disassembly.

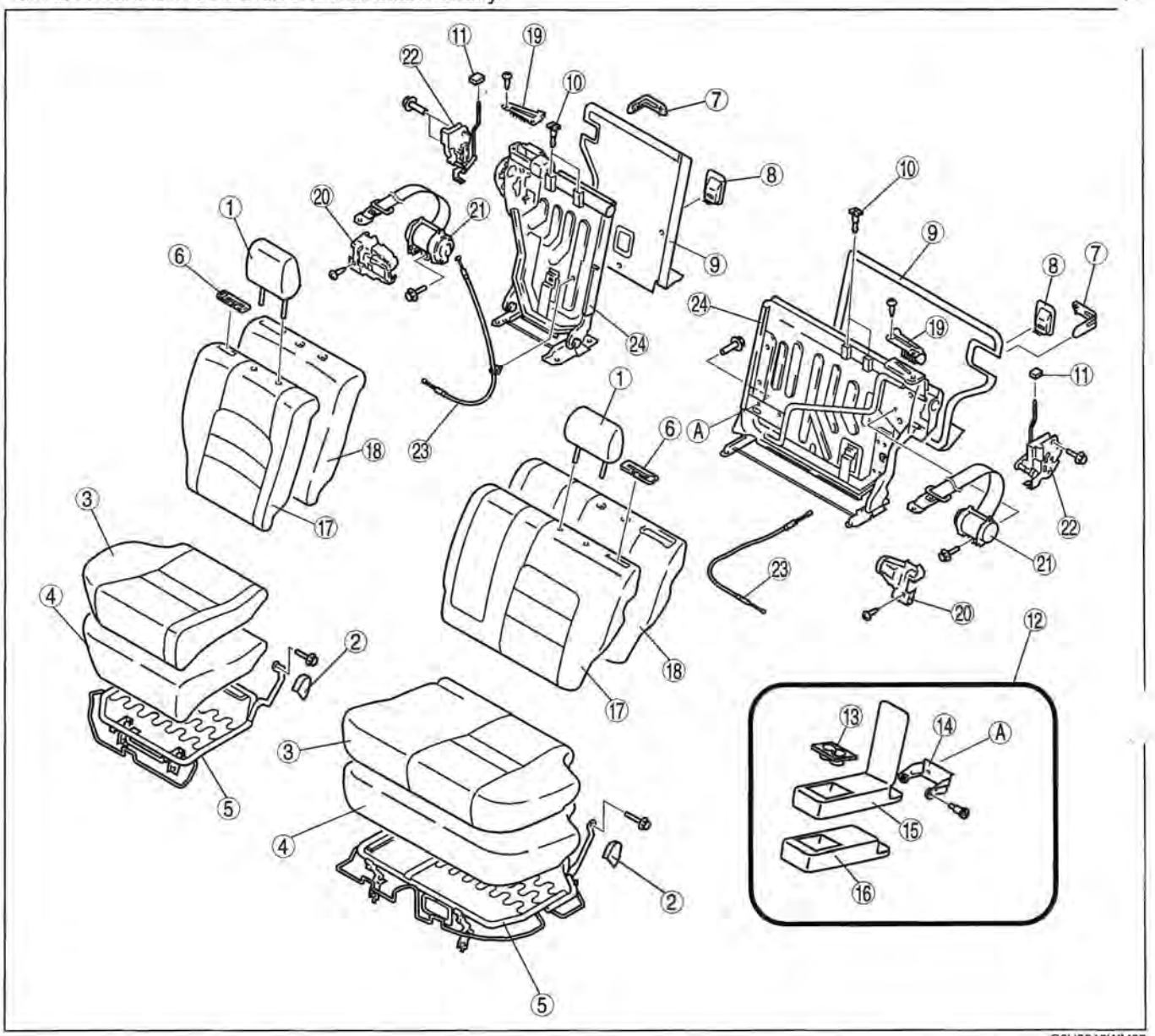

C6U0913WM02

1	Headrest
2	Hinge cover
3	Seat cushion trim
4	Seat cushion pad
5	Seat cushion frame
6	Remote button cover
7	Seat back catch cover
8	Child seat anchor cover
9	Seat back board
10	Pole guide
11	Remote button
12	Armrest assembly

13	Cup holder
14	Armrest hinge
15	Armrest trim
16	Armrest pad
17	Seat back trim
18	Seat back pad
19	Seat belt guide
20	Retractor cover
21	Rear seat belt
22	Seat back catch
23	Remote wire
24	Seat back frame

REMOTE HANDLE LEVER REMOVAL/INSTALLATION [SPORT SEDAN]

E6U091357200W05

1. To remove the remote wire, remove the trunk side trim.
2. Remove in the order indicated in the table.

1	Remote handle lever
2	Remote wire
3	Remote catch
4	Seat bracket

3. Install in the reverse order of removal.

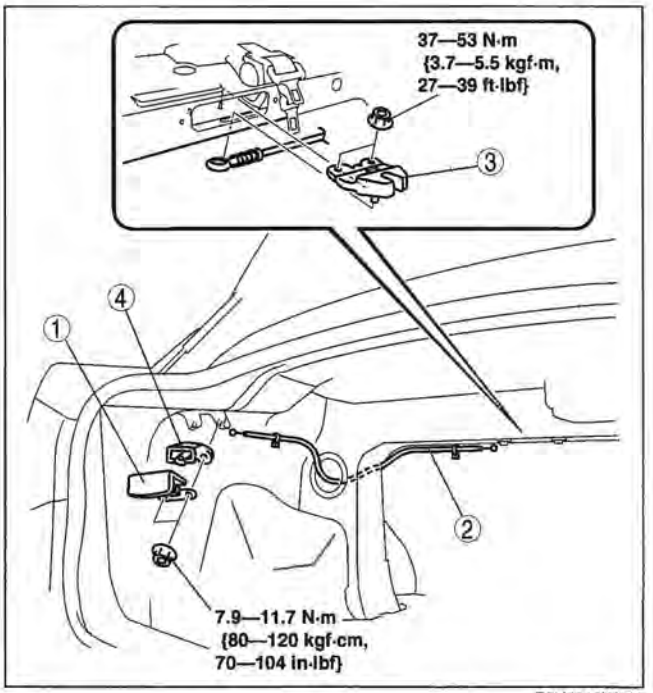

B6U0913W016

REMOTE HANDLE LEVER REMOVAL/INSTALLATION [5-DOOR, SPORT WAGON]

E6U091357200W06

1. To remove the remote wire, remove the trunk side upper trim and trunk side lower trim.
2. Remove in the order indicated in the table.

1	Remote handle lever
2	Cover
3	Remote wire

3. Install in the reverse order of removal.

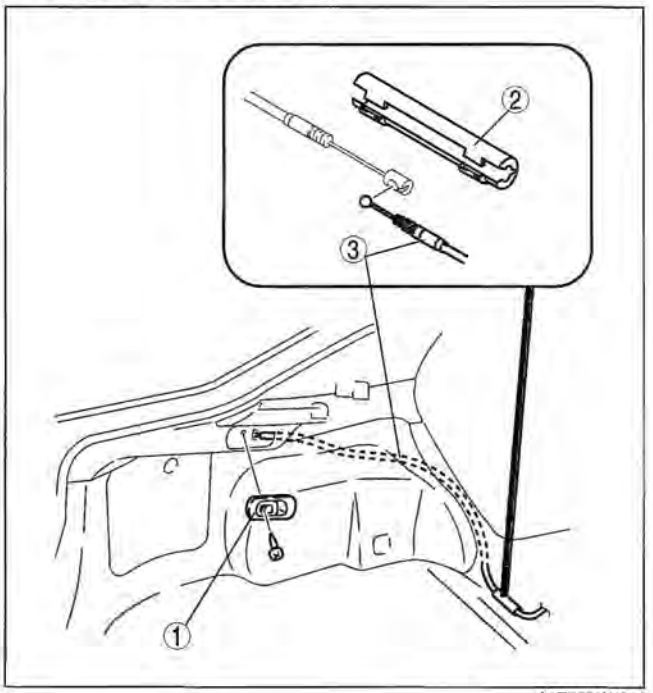

A6E7752W011

FRONT TILT MOTOR REMOVAL/INSTALLATION [L3 WITH TC]

E6U091358000W01

1. Operate the power seat switch and move the seat back to the full-upright position.
2. Disconnect the negative battery cable.
3. Remove the driver's side front seat. (See 09–13–4 FRONT SEAT REMOVAL/INSTALLATION [L3 WITH TC])
4. Remove the front cover (No.1, No.2) and side cover. (See 09–13–6 FRONT SEAT DISASSEMBLY/ASSEMBL. [L3 WITH TC])
5. Remove the seat cushion. (See 09–13–6 FRONT SEAT DISASSEMBLY/ASSEMBLY [L3 WITH TC])
6. Remove in the order indicated in the table.

1	U ring
2	Washer
3	Nut
4	Front tilt motor (See 09–13–22 Front Tilt Motor Removal Note) (See 09–13–23 Front Tilt Motor Installation Note)
5	Connector

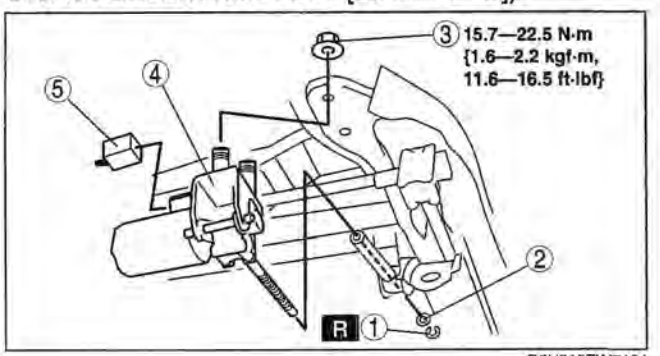

D6U913ZW7101

7. Install in the reverse order of removal.

Front Tilt Motor Removal Note

When motor is operable

1. Connect battery positive voltage to front seat connector terminal G and connect terminal F to ground.
2. Operate the power seat switch in the tilt-up direction so that the front tilt motor rotates and the shaft comes out from the guide.

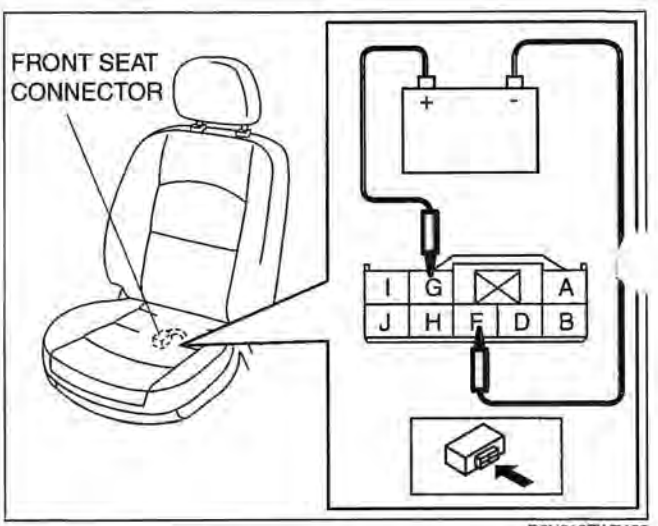

D6U913ZW7102

When motor is not operable

Caution

- **This procedure should be performed when the front tilt motor is replaced with a new one. A front tilt motor removed using this procedure should not be reinstalled to the vehicle as it may cause abnormal operation or noise.**

1. Remove the screws.
2. Remove the bracket.
3. Remove the front tilt motor and washer.
4. Turn the shaft in the direction indicated in the figure and remove it from the guide.

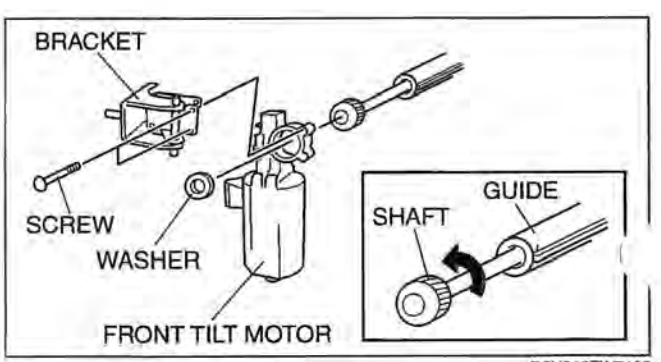

D6U913ZW7103

Front Tilt Motor Installation Note

1. Rotate the shaft by hand and insert it **approx. 5 mm** into the guide.
2. Connect battery positive voltage to front seat connector terminal G and connect terminal F to ground.

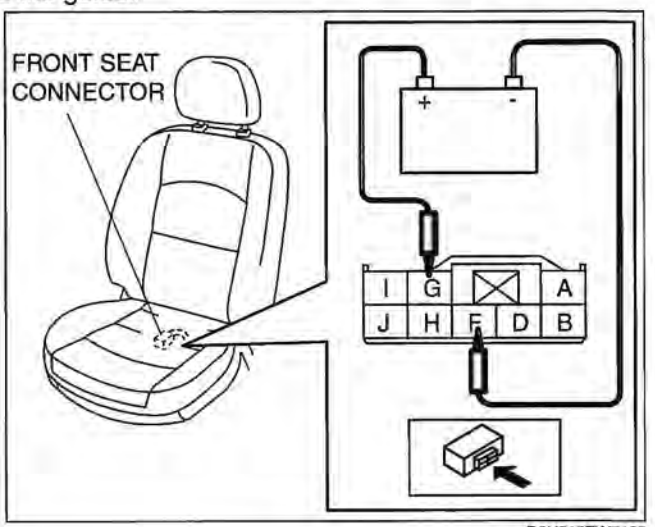

D6U913ZW7102

3. Operate the power seat switch in the tilt-down direction so that the front tilt motor rotates and the shaft is inserted into the guide.

Caution

- **If the lift nut is not in the correct position, it may strip the shaft screw, thereby causing the unit to not operate properly. Verify the lift nut position while inserting the shaft.**

Note

- Operate the motor until the notch for installing the U-ring is visible out of the guide.

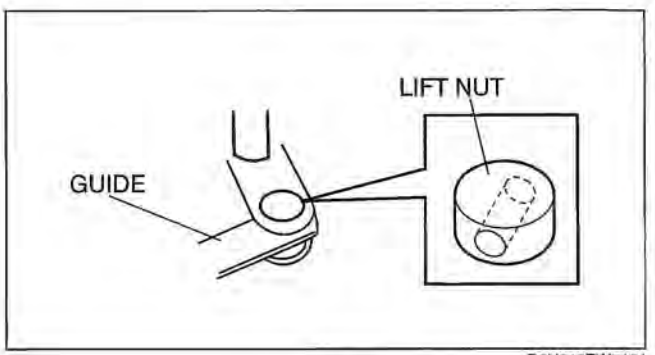

D6U913ZW7104

09-13

FRONT TILT MOTOR INSPECTION [L3 WITH TC]

E6U091358000W02

1. Disconnect the front tilt motor connector.
2. Apply battery positive voltage to the front tilt motor terminals and inspect the front tilt motor operation
   - If not as specified, replace the front tilt motor.

Motor operation	Connection	
	B+	GND
Up	A	B
Down	B	A

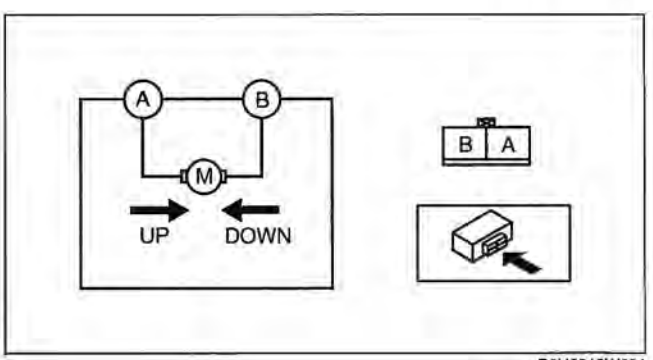

B6U0913W001

FRONT TILT MOTOR INSPECTION [EXCEPT L3 WITH TC]

E6U091358000W09

1. Disconnect the front tilt motor connector.
2. Apply battery positive voltage to the front tilt motor terminals and inspect the front tilt motor operation
   - If not as specified, replace the front tilt motor.

Motor operation	Connection	
	B+	GND
Up	C	E
Down	E	C

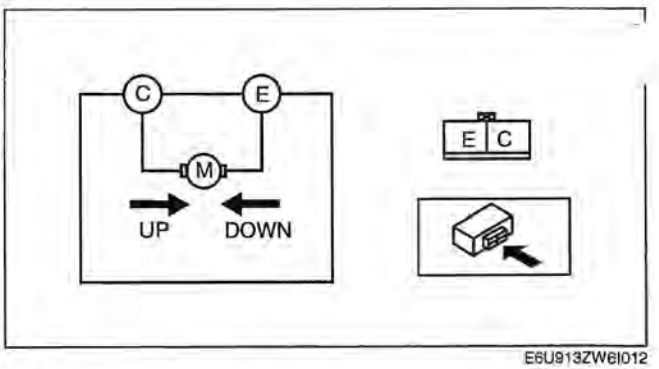

E6U913ZW6I012

REAR TILT MOTOR REMOVAL/INSTALLATION [L3 WITH TC]

E6U091358000W03

1. Operate the power seat switch and move the seat back to the full-upright position.
2. Disconnect the negative battery cable.
3. Remove the driver's side front seat. (See 09–13–4 FRONT SEAT REMOVAL/INSTALLATION [L3 WITH TC])
4. Remove the front cover (No.1, No.2) and side cover. (See 09–13–6 FRONT SEAT DISASSEMBLY/ASSEMBLY [L3 WITH TC])
5. Remove the seat cushion. (See 09–13–6 FRONT SEAT DISASSEMBLY/ASSEMBLY [L3 WITH TC])
6. Remove in the order indicated in the table.

1	U ring
2	Washer
3	Nut
4	Rear tilt motor (See 09–13–24 Rear Tilt Motor Removal Note) (See 09–13–25 Rear Tilt Motor Installation Note)
5	Connector

7. Install in the reverse order of removal.

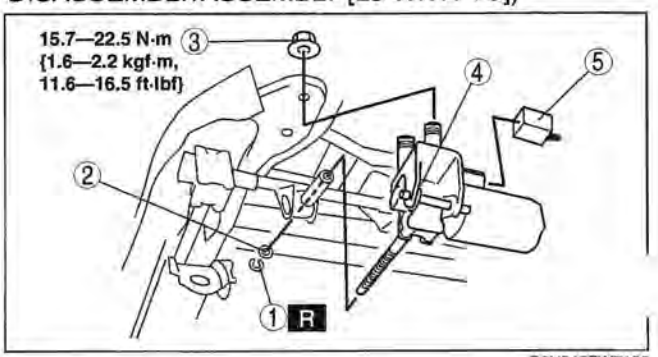

D6U913ZW7105

Rear Tilt Motor Removal Note

When motor is operable

1. Connect battery positive voltage to front seat connector terminal G and connect terminal F to ground.
2. Operate the power seat switch in the tilt-up direction so that the rear tilt motor rotates and the shaft comes out from the guide.

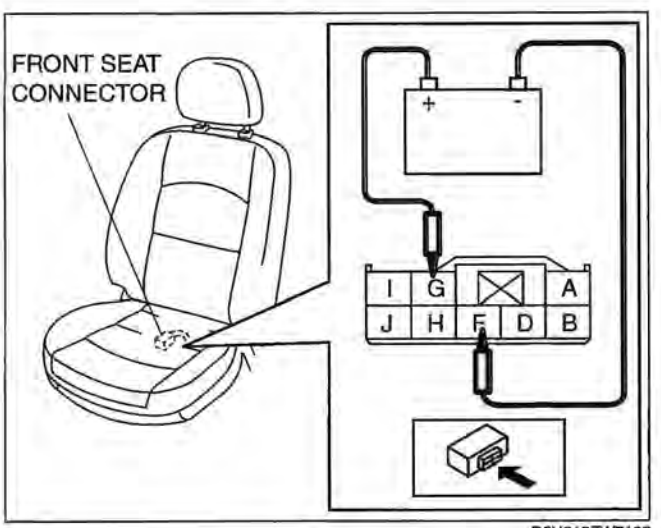

D6U913ZW7102

When motor is not operable

Caution
- **This procedure should be performed when the rear tilt motor is replaced with a new one. A rear tilt motor removed using this procedure should not be reinstalled to the vehicle as it may cause abnormal operation or noise.**

1. Remove the screws.
2. Remove the bracket.
3. Remove the rear tilt motor and washer.
4. Turn the shaft in the direction indicated in the figure and remove it from the guide.

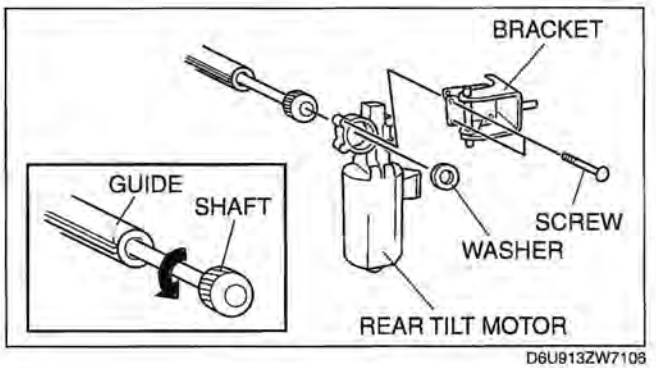

D6U913ZW7108

Rear Tilt Motor Installation Note

1. Rotate the shaft by hand and insert it **approx. 5 mm** into the guide.
2. Connect battery positive voltage to front seat connector terminal G and connect terminal F to ground.

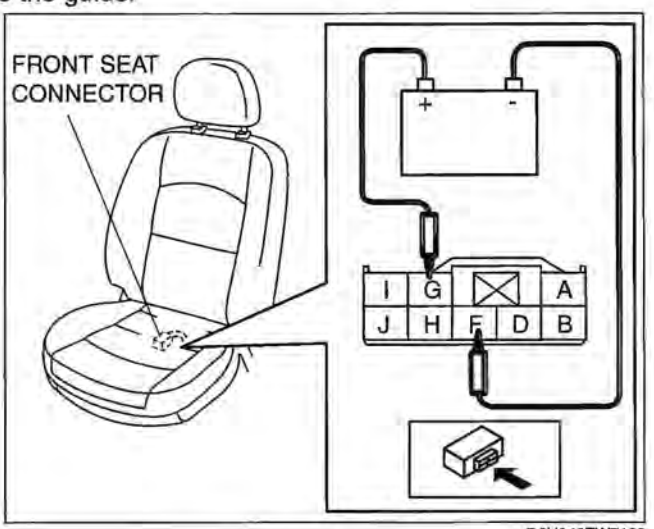

D6U913ZW7102

3. Operate the power seat switch in the tilt-down direction so that the rear tilt motor rotates and the shaft is inserted into the guide.

Caution
- **If the lift nut is not in the correct position, it may strip the shaft screw, thereby causing the unit to not operate properly. Verify the lift nut position while inserting the shaft.**

Note
- Operate the motor until the bracket contacts the guide.

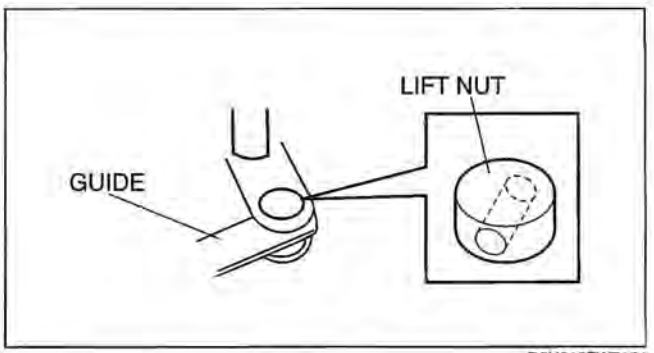

D6U913ZW7104

REAR TILT MOTOR INSPECTION [L3 WITH TC]

E6U091358000W04

1. Disconnect the rear tilt motor connector.
2. Apply battery positive voltage to the rear tilt motor terminals and inspect the rear tilt motor operation
   - If not as specified, replace the rear tilt motor.

Motor operation	Connection	
	B+	GND
Up	A	B
Down	B	A

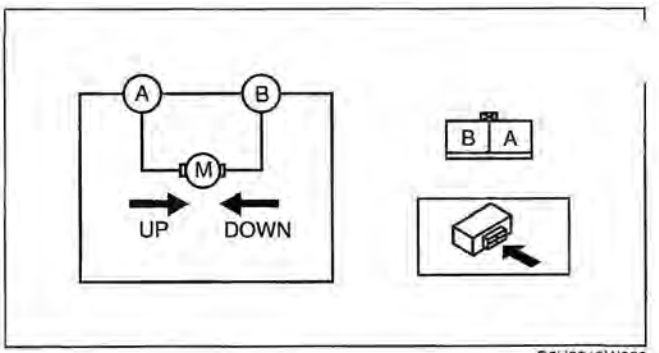

B6U0913W002

REAR TILT MOTOR INSPECTION [EXCEPT L3 WITH TC]

E6U091358000W10

1. Disconnect the rear tilt motor connector.
2. Apply battery positive voltage to the rear tilt motor terminals and inspect the rear tilt motor operation
   - If not as specified, replace the rear tilt motor.

Motor operation	Connection	
	B+	GND
Up	J	H
Down	H	J

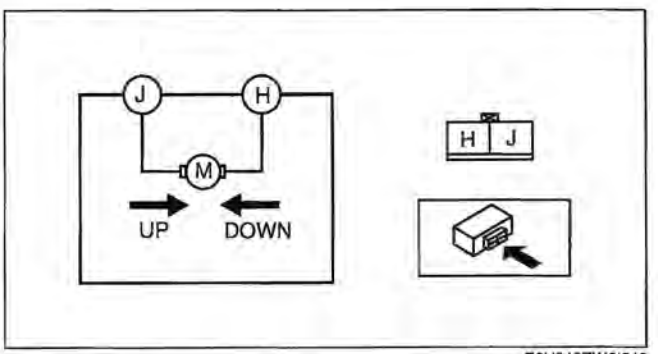

E6U913ZW6I013

SLIDE MOTOR INSPECTION [L3 WITH TC]

E6U091358000

1. Disconnect the slide motor connector.
2. Apply battery positive voltage to the slide motor terminals and inspect the slide motor operation
   - If not as specified, replace the seat cushion frame.

Motor operation	Connection	
	B+	GND
Forward	A	B
Backward	B	A

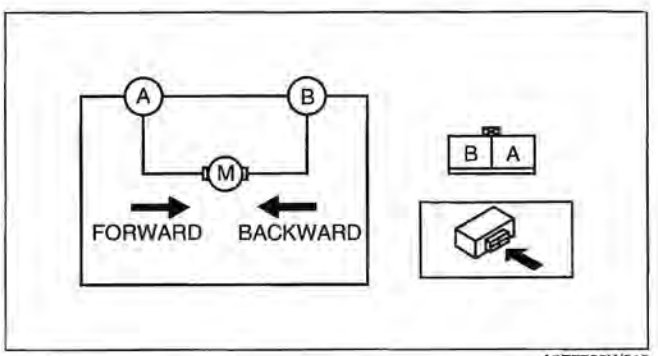

A6E7752W010

SLIDE MOTOR INSPECTION [EXCEPT L3 WITH TC]

E6U091358000W11

1. Disconnect the slide motor connector.
2. Apply battery positive voltage to the slide motor terminals and inspect the slide motor operation
   - If not as specified, replace the seat cushion frame.

Motor operation	Connection	
	B+	GND
Forward	G	D
Backward	D	G

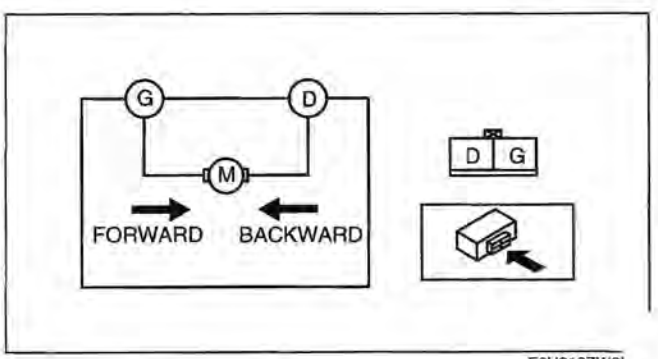

E6U913ZW6I

RECLINER MOTOR REMOVAL/INSTALLATION [L3 WITH TC]

E6U091358000W06

1. Disconnect the negative battery cable.
2. Remove the driver's side front seat. (See 09–13–4 FRONT SEAT REMOVAL/INSTALLATION [L3 WITH TC]) Remove the front cover (No.1, No.2) and side cover. (See 09–13–6 FRONT SEAT DISASSEMBLY/ASSEMBLY [L3 WITH TC])
4. Remove in the order indicated in the table.

1	Bolt
2	Connector
3	Recliner motor

5. Install in the reverse order of removal.

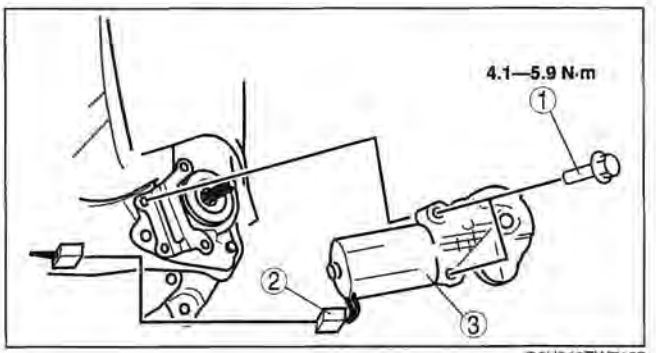

D6U913ZW7107

RECLINER MOTOR REMOVAL/INSTALLATION [EXCEPT L3 WITH TC]

E6U091358000W12

1. Disconnect the negative battery cable.
2. Remove the driver's side front seat. (See 09–13–5 FRONT SEAT REMOVAL/INSTALLATION [EXCEPT L3 WITH TC].)
3. Remove the seat back frame. (See 09–13–9 FRONT SEAT DISASSEMBLY/ASSEMBLY [EXCEPT L3 WITH TC].)
4. Remove one of the two washers on either side from the recliner motor shaft.
5. Pull out the recliner motor shaft in the direction of the arrow and disconnect it from the recliner motor.
6. Remove the bolt.
7. Remove the recliner motor from the seat back frame.
8. Remove the connector.
9. Install in the reverse order of removal.

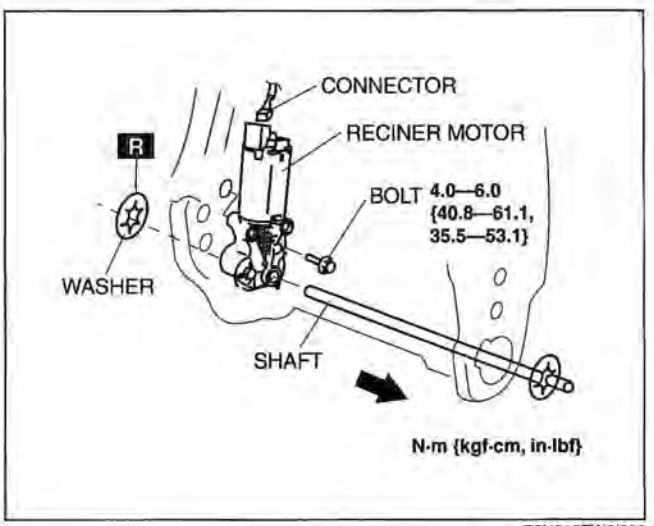

E6U913ZW6I008

RECLINER MOTOR INSPECTION [L3 WITH TC]

E6U091358000W07

1. Disconnect the recliner motor connector.
2. Apply battery positive voltage to the recliner motor terminals and inspect the recliner motor operation.
   - If not as specified, replace the recliner motor.

Motor operation	Connection	
	B+	GND
Forward	A	B
Backward	B	A

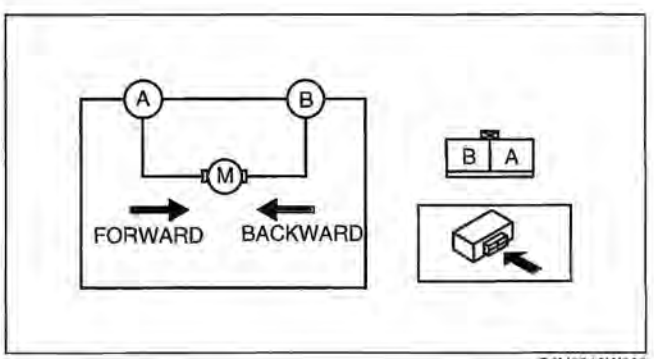

B6U0913W009

RECLINER MOTOR INSPECTION [EXCEPT L3 WITH TC]

E6U091358000W13

1. Disconnect the recliner motor connector.
2. Apply battery positive voltage to the recliner motor terminals and inspect the recliner motor operation.
   - If not as specified, replace the recliner motor.

Motor operation	Connection	
	B+	GND
Forward	L	B
Backward	B	L

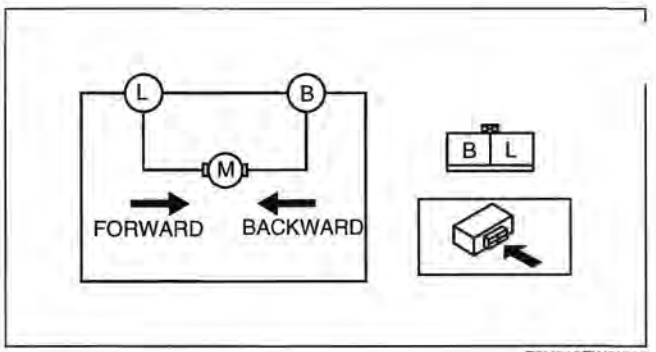

E6U913ZW6I015

POWER SEAT SWITCH INSPECTION

E6U091358000W08

1. Disconnect the power seat switch connector.
2. Disconnect the rear tilt motor connector.
3. Inspect for continuity between the power seat switch connector terminals using an ohmmeter.
   - If not as specified, replace the power seat switch.

O—O : Continuity

Switch position		Terminal									
		A	B	C	D	E	G	H	J	K	L
Recliner	Forward	O	O							O	O
	Off		O							O	O
	Backward	O	O							O	O
Slide	Forward	O			O		O			O	
	Off				O		O			O	
	Backward	O			O		O			O	
Front tilt	Up	O		O		O				O	
	Off			O		O				O	
	Down	O		O		O				O	
Rear tilt	Up	O						O	O	O	
	Off							O	O	O	
	Down	O						O	O	O	

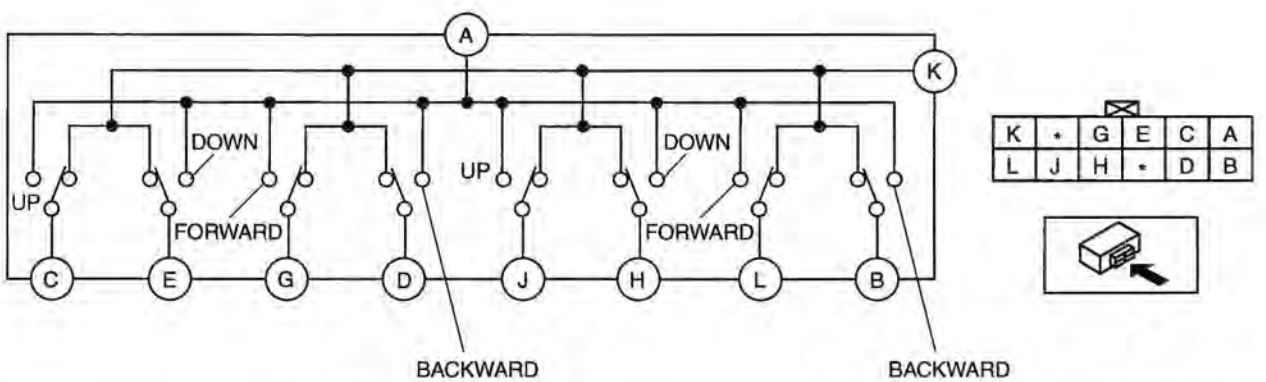

B6U0913W003

SEAT WARMER SWITCH REMOVAL/INSTALLATION

E6U091388110W01

1. Disconnect the negative battery cable.
2. Remove the panel No.1. (See 09–17–8 CONSOLE REMOVAL/INSTALLATION.)
   Remove in the order indicated in the table.

1	Seat warmer switch (See 09–13–29 Seat Warmer Switch Removal Note.)
2	Connector

4. Install in the reverse order of removal.

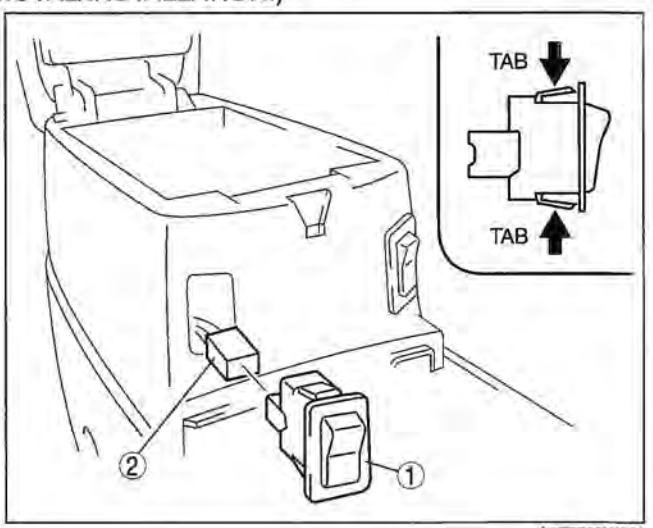

A6E7752W001

Seat Warmer Switch Removal Note

1. Squeeze the tabs of seat warmer switch and pull it outward to remove it.

SEAT WARMER SWITCH INSPECTION

1. Inspect for continuity between the seat warmer switch terminals using an ohmmeter.
   - If not as specified, replace the seat warmer switch.

○—○: Continuity ○—⓪—○ : Bulb

Switch position	Terminal				
	B	H	F	A	G
ON	○—⓪—○		○	○—⓪—○	
OFF	○—⓪—○			○—⓪—○	

A6E7752W024

E6U091388110W02

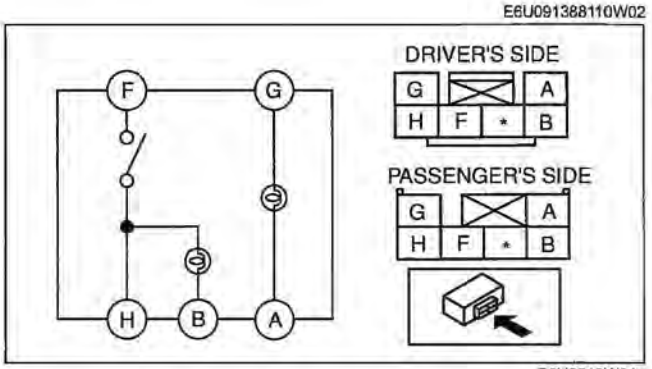

B6U0913W017

09–13

SEAT WARMER UNIT INSPECTION [L3 WITH TC]

E6U09138811OW03

Seat Cushion

1. Remove the front seat. (See 09–13–4 FRONT SEAT REMOVAL/INSTALLATION [L3 WITH TC].)
2. Remove the seat cushion trim.
3. While inspecting for continuity between the connector terminals A and B, use a dryer to warm the thermostat of the seat warmer unit on seat cushion.

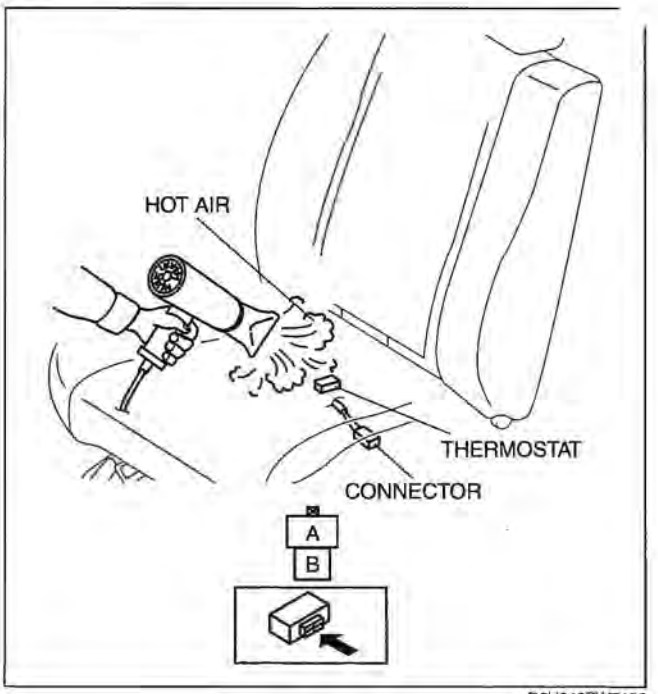

D6U913ZW7108

4. When the ohmmeter indicates that there is no continuity, turn off the dryer, then use a thermometer to measure the temperature of the thermostat.
5. Verify that the temperature is **approx. 37 °C {99 °F}**.

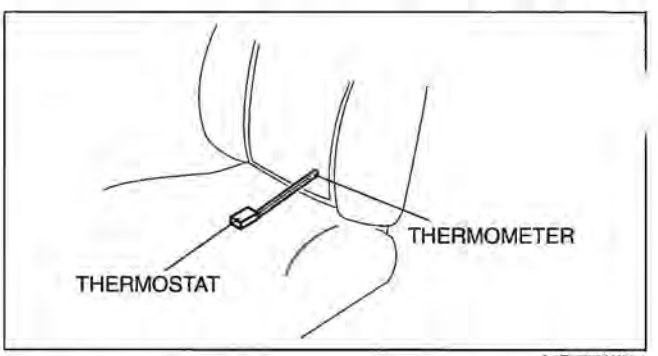

A6E7752W021

6. Using an ohmmeter, verify that there is continuity between the seat warmer unit connector terminals when temperature drops to **approx. 28 °C {82 °F}**.
   - If not as indicated in the table, replace the seat warmer unit.

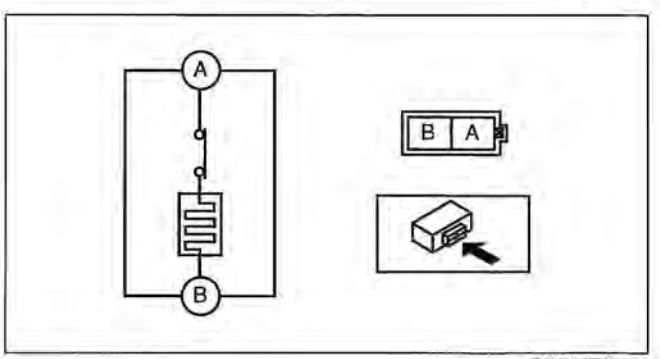

E6U913ZW5006

○—○ : Continuity

Thermostat temperature	Terminal	
	A	B
More than approx. 37 °C {99 °F}		
Less than approx. 28 °C {82 °F}	○	○

C6U0913W102

Seat Back

1. Remove the front seat. (See 09–13–4 FRONT SEAT REMOVAL/INSTALLATION [L3 WITH TC].)
2. Verify that the continuity between terminals A and B is as indicated in the table.
   - If not as indicated in the table, replace the seat warmer unit.

O—O : Continuity

Test condition	Terminal	
	A	B
Under any condition	O	O

D6U913ZW7100

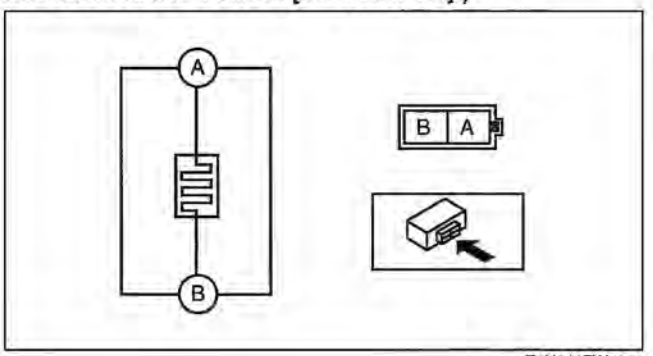

E6U913ZW5007

SEAT WARMER UNIT INSPECTION [EXCEPT L3 WITH TC]

E6U091388110W04

Seat Cushion

1. Remove the front seat. (See 09–13–5 FRONT SEAT REMOVAL/INSTALLATION [EXCEPT L3 WITH TC].)
2. Remove the seat cushion trim. (See 09–13–9 FRONT SEAT DISASSEMBLY/ASSEMBLY [EXCEPT L3 WITH TC].)
3. While inspecting for continuity between the connector terminals A and B, use a dryer to warm the thermostat of the seat warmer unit on seat cushion.

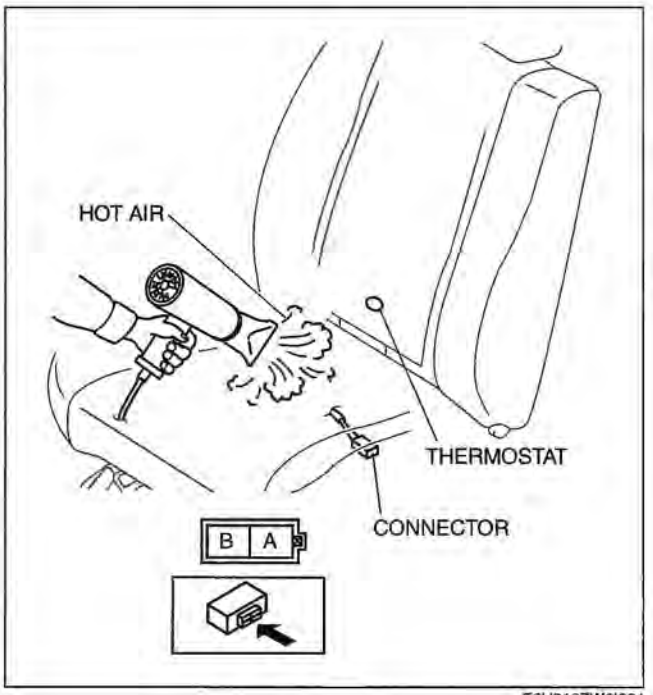

E6U913ZW6I001

4. When the ohmmeter indicates that there is no continuity, turn off the dryer, then use a thermometer to measure the temperature of the thermostat.
5. Verify that the temperature is **approx. 37 °C {99 °F}**.

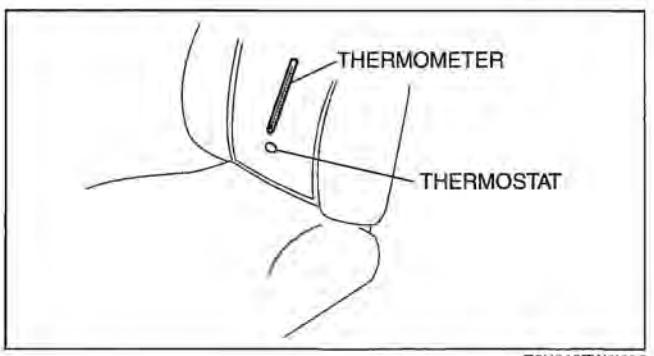

E6U913ZW6I002

6. Using an ohmmeter, verify that there is continuity between the seat warmer unit connector terminals when temperature drops to **approx. 28 °C {82 °F}**.
   - If not as indicated in the table, replace the seat warmer unit.

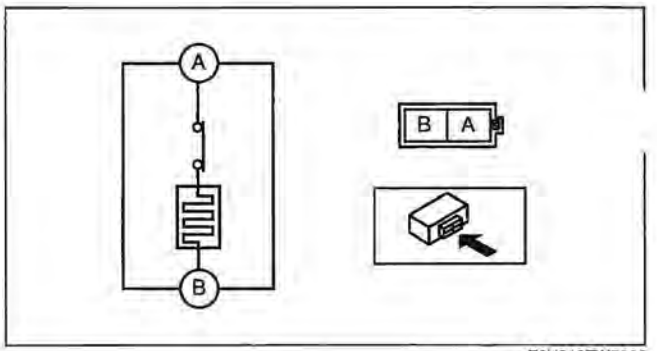

E6U913ZW5006

O—O : Continuity

Thermostat temperature	Terminal	
	A	B
More than approx. 37 °C {99 °F}		
Less than approx. 28 °C {82 °F}	O	O

C6U0913W102

Seat Back

1. Remove the front seat. (See 09–13–5 FRONT SEAT REMOVAL/INSTALLATION [EXCEPT L3 WITH TC].)
2. Verify that the continuity between terminals A and B is as indicated in the table.
   - If not as indicated in the table, replace the seat warmer unit.

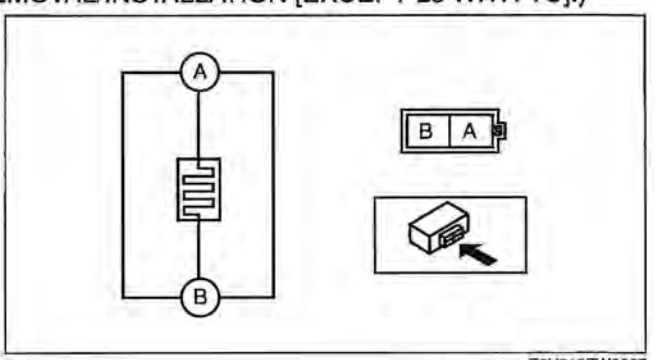

E6U913ZW5007

O—O : Continuity

Test condition	Terminal	
	A	B
Under any condition	O	O

D6U913ZW7100

09–14 SECURITY AND LOCKS

POWER DOOR LOCK SYSTEM AND KEYLESS ENTRY SYSTEM LOCATION INDEX [WITH ADVANCED KEYLESS SYSTEM] 09–14–3
POWER DOOR LOCK SYSTEM AND KEYLESS ENTRY SYSTEM LOCATION INDEX [WITH KEYLESS ENTRY SYSTEM] 09–14–4
THEFT-DETERRENT SYSTEM LOCATION INDEX 09–14–5
IMMOBILIZER SYSTEM LOCATION INDEX [WITH ADVANCED KEYLESS SYSTEM] 09–14–6
IMMOBILIZER SYSTEM LOCATION INDEX [WITH KEYLESS ENTRY SYSTEM] 09–14–7
FRONT DOOR KEY CYLINDER REMOVAL/INSTALLATION 09–14–8
FRONT DOOR LATCH AND LOCK ACTUATOR REMOVAL/INSTALLATION 09–14–8
FRONT DOOR LOCK ACTUATOR INSPECTION 09–14–8
Door Lock Actuator 09–14–8
Door Lock-link Switch 09–14–8
Door Key Cylinder Switch 09–14–9
REAR DOOR LATCH AND LOCK ACTUATOR REMOVAL/INSTALLATION 09–14–9
REAR DOOR LOCK ACTUATOR INSPECTION 09–14–9
Door Lock Actuator 09–14–9
Door Lock-link Switch (With Theft-deterrent System) 09–14–9
INNER HANDLE REMOVAL/INSTALLATION 09–14–10
FRONT OUTER HANDLE REMOVAL/INSTALLATION 09–14–10
REAR OUTER HANDLE REMOVAL/INSTALLATION 09–14–11
DOOR LOCK SWITCH REMOVAL/INSTALLATION 09–14–11
DOOR LOCK SWITCH INSPECTION 09–14–11
KEYLESS CONTROL MODULE REMOVAL/INSTALLATION [WITH ADVANCED KEYLESS SYSTEM] 09–14–12
KEYLESS CONTROL MODULE INSPECTION [WITH ADVANCED KEYLESS SYSTEM] 09–14–13
Terminal Voltage Table (Reference) 09–14–13
CARD KEY ID CODE REGISTRATION [WITH ADVANCED KEYLESS SYSTEM] 09–14–15
With two programmed card keys 09–14–15
Using WDS or Equivalent 09–14–16
CLEARING CARD KEY 09–14–16
STEERING LOCK UNIT ID CODE REGISTRATION [WITH ADVANCED KEYLESS SYSTEM] 09–14–17
KEYLESS CONTROL MODULE CONFIGURATION [WITH ADVANCED KEYLESS SYSTEM] 09–14–17
CUSTOMIZED FUNCTION SETTING PROCEDURE 09–14–18
KEYLESS RECEIVER REMOVAL/INSTALLATION 09–14–18
KEYLESS RECEIVER INSPECTION 09–14–18
Terminal Voltage Table (Reference) 09–14–18
KEYLESS ANTENNA REMOVAL/INSTALLATION 09–14–19
Driver-side/passenger-side 09–14–19
Trunk Lid 09–14–19
Interior, Front 09–14–19
Interior, Middle 09–14–20
Interior, Rear 09–14–20
KEYLESS BEEPER REMOVAL/INSTALLATION 09–14–20
REQUEST SWITCH REMOVAL/INSTALLATION 09–14–21
Deiver-side/passenger-side 09–14–21
Trunk Lid 09–14–21
REQUEST SWITCH INSPECTION 09–14–21
CARD KEY BATTERY REPLACEMENT [WITH ADVANCED KEYLESS SYSTEM] 09–14–22
Card Key Type 09–14–22
TRANSMITTER BATTERY REPLACEMENT [KEYLESS ENTRY SYSTEM] 09–14–23
Retractable Key Type 09–14–23
FUEL-FILLER LID AND OPENER REMOVAL/INSTALLATION 09–14–24
TRUNK LID OPENER REMOVAL/INSTALLATION [SPORT SEDAN] 09–14–24
TRUNK LID OPENER INSPECTION [SPORT SEDAN] 09–14–25
LIFTGATE OUTER HANDLE REMOVAL/INSTALLATION [5-DOOR, SPORT WAGON] 09–14–25
LIFTGATE LATCH AND LOCK ACTUATOR REMOVAL/INSTALLATION [5-DOOR, SPORT WAGON] 09–14–25
LIFTGATE LOCK ACTUATOR INSPECTION [5-DOOR, SPORT WAGON] 09–14–26
TRUNK LID OPENER SWITCH REMOVAL/INSTALLATION [SPORT SEDAN] 09–14–26
TRUNK LID OPEN CANCEL SWITCH REMOVAL/INSTALLATION 09–14–26
TRUNK LID OPEN CANCEL SWITCH INSPECTION 09–14–26
TRUNK KEY CYLINDER REMOVAL/INSTALLATION [SPORT SEDAN] 09–14–27
TRUNK KEY CYLINDER SWITCH INSPECTION [SPORT SEDAN] 09–14–27
HOOD SWITCH INSPECTION 09–14–27

COIL REMOVAL/INSTALLATION **09–14–28**
Coil Installation Note **09–14–28**
IMMOBILIZER SYSTEM COMPONENT REPLACEMENT/KEY ADDITION AND CLEARING [WITH ADVANCED KEYLESS SYSTEM] **09–14–28**
Foreword **09–14–28**
WDS or Equivalent Connecting Procedure **09–14–31**
No.1 Additional Key Programming Procedure (Using Two Valid Keys) **09–14–32**
No. 2 Key Additional Programming Procedure (Using the WDS or Equivalent) **09–14–33**
No.3 PCM, and Key Replacement Procedure (Clearing Previously Programmed Key ID Numbers, Key Re-program) **09–14–34**
No. 4 Key Additional Programming Procedure Changing **09–14–36**
No.5 Resetting Procedure for the Immobilizer System when Replacing the PCM, Keyless Control Module, or Steering Lock Unit **09–14–37**
SECURITY ACCESS PROCEDURE **09–14–39**
IMMOBILIZER SYSTEM REPROGRAM PROCEDURE [WITH KEYLESS ENTRY SYSTEM] **09–14–39**
Key Addition **09–14–40**
Key Replacement **09–14–41**
PCM Replacement **09–14–42**
Customer Spare Key Programming Without Using SST (WDS or equivalent) Set-up **09–14–42**
Security Access Procedure **09–14–42**
TRANSMITTER ID CODE REGISTRATION [KEYLESS ENTRY SYSTEM] **09–14–43**

POWER DOOR LOCK SYSTEM AND KEYLESS ENTRY SYSTEM LOCATION INDEX [WITH ADVANCED KEYLESS SYSTEM]

E6U091466000W02

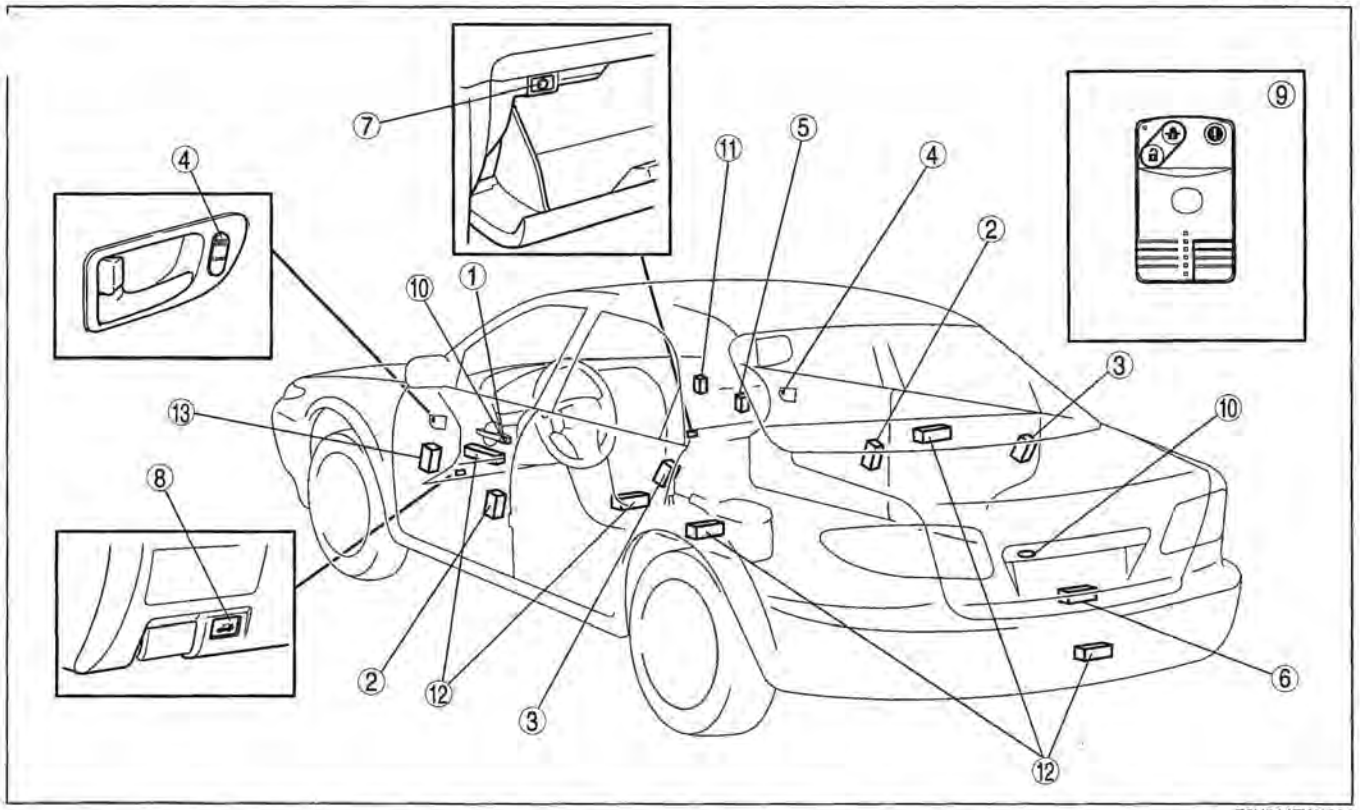

E6U914ZW1001

1	Door key cylinder (See 09–14–8 FRONT DOOR KEY CYLINDER REMOVAL/INSTALLATION)
2	Front door lock actuator (See 09–14–8 FRONT DOOR LOCK ACTUATOR INSPECTION)
3	Rear door lock actuator (See 09–14–9 REAR DOOR LOCK ACTUATOR INSPECTION)
4	Door lock switch (See 09–14–11 DOOR LOCK SWITCH REMOVAL/INSTALLATION) (See 09–14–11 DOOR LOCK SWITCH INSPECTION)
5	Keyless control module (See 09–14–12 KEYLESS CONTROL MODULE REMOVAL/INSTALLATION [WITH ADVANCED KEYLESS SYSTEM]) (See 09–14–13 KEYLESS CONTROL MODULE INSPECTION [WITH ADVANCED KEYLESS SYSTEM]) (See 09–14–17 STEERING LOCK UNIT ID CODE REGISTRATION [WITH ADVANCED KEYLESS SYSTEM]) (See 09–14–17 KEYLESS CONTROL MODULE CONFIGURATION [WITH ADVANCED KEYLESS SYSTEM])
6	Trunk lid opener (See 09–14–24 TRUNK LID OPENER REMOVAL/INSTALLATION [SPORT SEDAN]) (See 09–14–25 TRUNK LID OPENER INSPECTION [SPORT SEDAN])
7	Trunk lid open cancel switch (See 09–14–26 TRUNK LID OPEN CANCEL SWITCH REMOVAL/INSTALLATION) (See 09–14–26 TRUNK LID OPEN CANCEL SWITCH INSPECTION)
8	Trunk lid open switch (See 09–14–26 TRUNK LID OPENER SWITCH REMOVAL/INSTALLATION [SPORT SEDAN])
9	Card key (transmitter) (See 09–14–22 CARD KEY BATTERY REPLACEMENT [WITH ADVANCED KEYLESS SYSTEM]) (See 09–14–15 CARD KEY ID CODE REGISTRATION [WITH ADVANCED KEYLESS SYSTEM])
10	Request switch (See 09–14–21 REQUEST SWITCH REMOVAL/INSTALLATION) (See 09–14–21 REQUEST SWITCH INSPECTION)
11	Keyless receiver (See 09–14–18 KEYLESS RECEIVER REMOVAL/INSTALLATION) (See 09–14–18 KEYLESS RECEIVER INSPECTION)
12	Keyless antenna (See 09–14–19 KEYLESS ANTENNA REMOVAL/INSTALLATION)
13	Keyless beeper (See 09–14–20 KEYLESS BEEPER REMOVAL/INSTALLATION)

POWER DOOR LOCK SYSTEM AND KEYLESS ENTRY SYSTEM LOCATION INDEX [WITH KEYLESS ENTRY SYSTEM]

E6U091466000W01

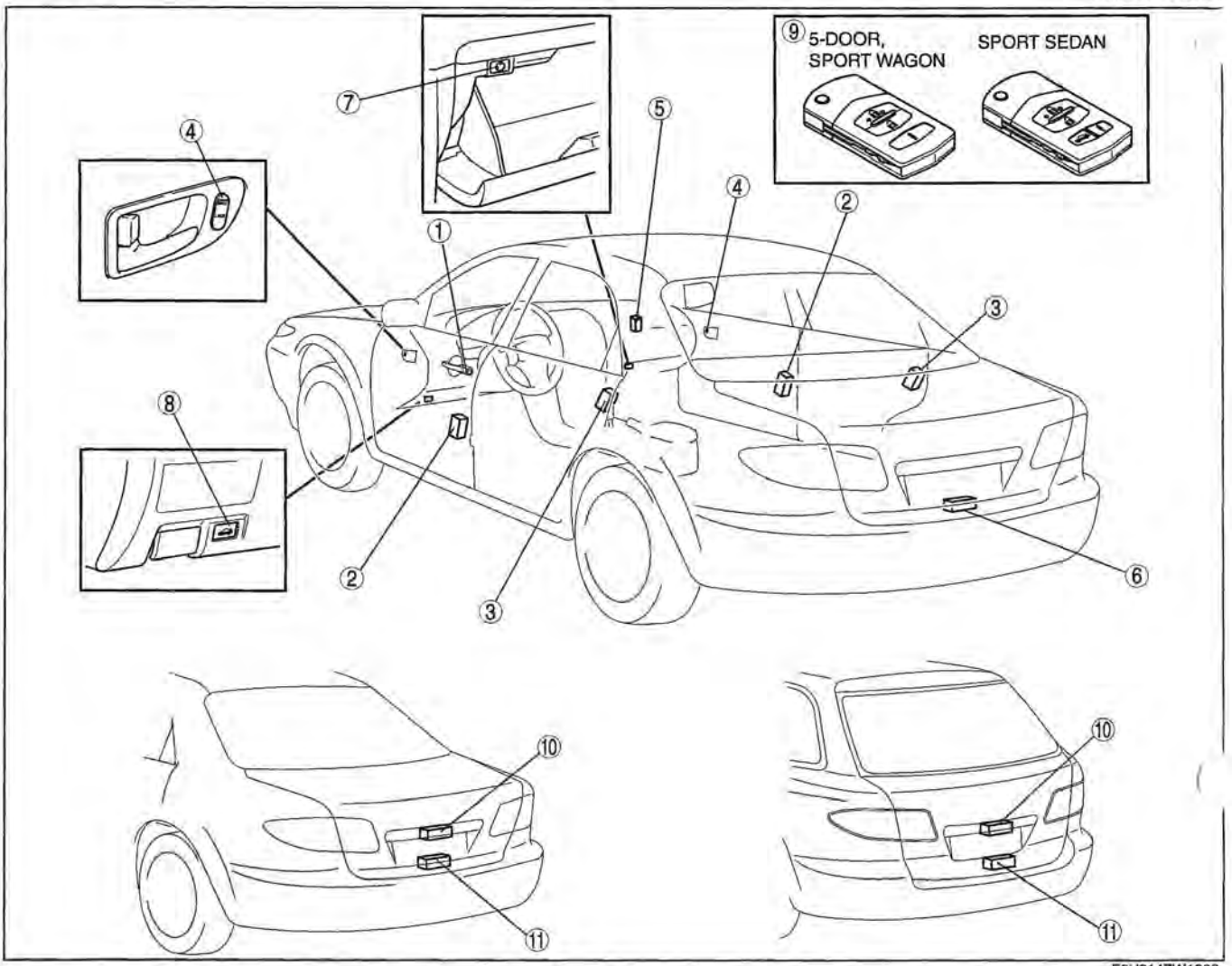

E6U914ZW1002

1	Door key cylinder (See 09–14–8 FRONT DOOR KEY CYLINDER REMOVAL/INSTALLATION)
2	Front door lock actuator (See 09–14–8 FRONT DOOR LOCK ACTUATOR INSPECTION)
3	Rear door lock actuator (See 09–14–9 REAR DOOR LOCK ACTUATOR INSPECTION)
4	Door lock switch (See 09–14–11 DOOR LOCK SWITCH REMOVAL/INSTALLATION) (See 09–14–11 DOOR LOCK SWITCH INSPECTION)
5	Keyless receiver (See 09–14–18 KEYLESS RECEIVER REMOVAL/INSTALLATION) (See 09–14–18 KEYLESS RECEIVER INSPECTION)
6	Trunk lid opener (See 09–14–24 TRUNK LID OPENER REMOVAL/INSTALLATION [SPORT SEDAN]) (See 09–14–25 TRUNK LID OPENER INSPECTION [SPORT SEDAN])

7	Trunk lid open cancel switch (See 09–14–26 TRUNK LID OPEN CANCEL SWITCH REMOVAL/INSTALLATION) (See 09–14–26 TRUNK LID OPEN CANCEL SWITCH INSPECTION)
8	Trunk lid open switch (See 09–14–26 TRUNK LID OPENER SWITCH REMOVAL/INSTALLATION [SPORT SEDAN])
9	Transmitter (See 09–14–23 TRANSMITTER BATTERY REPLACEMENT [KEYLESS ENTRY SYSTEM])
10	Liftgate outer handle [5-Door, Sport Wagon] (See 09–14–25 LIFTGATE OUTER HANDLE REMOVAL/INSTALLATION [5-DOOR, SPORT WAGON])
11	Liftgate latch and lock actuator [5-Door, Sport Wagon] (See 09–14–25 LIFTGATE LATCH AND LOCK ACTUATOR REMOVAL/INSTALLATION [5-DOOR, SPORT WAGON]) (See 09–14–26 LIFTGATE LOCK ACTUATOR INSPECTION [5-DOOR, SPORT WAGON])

THEFT-DETERRENT SYSTEM LOCATION INDEX

E6U091450000W02

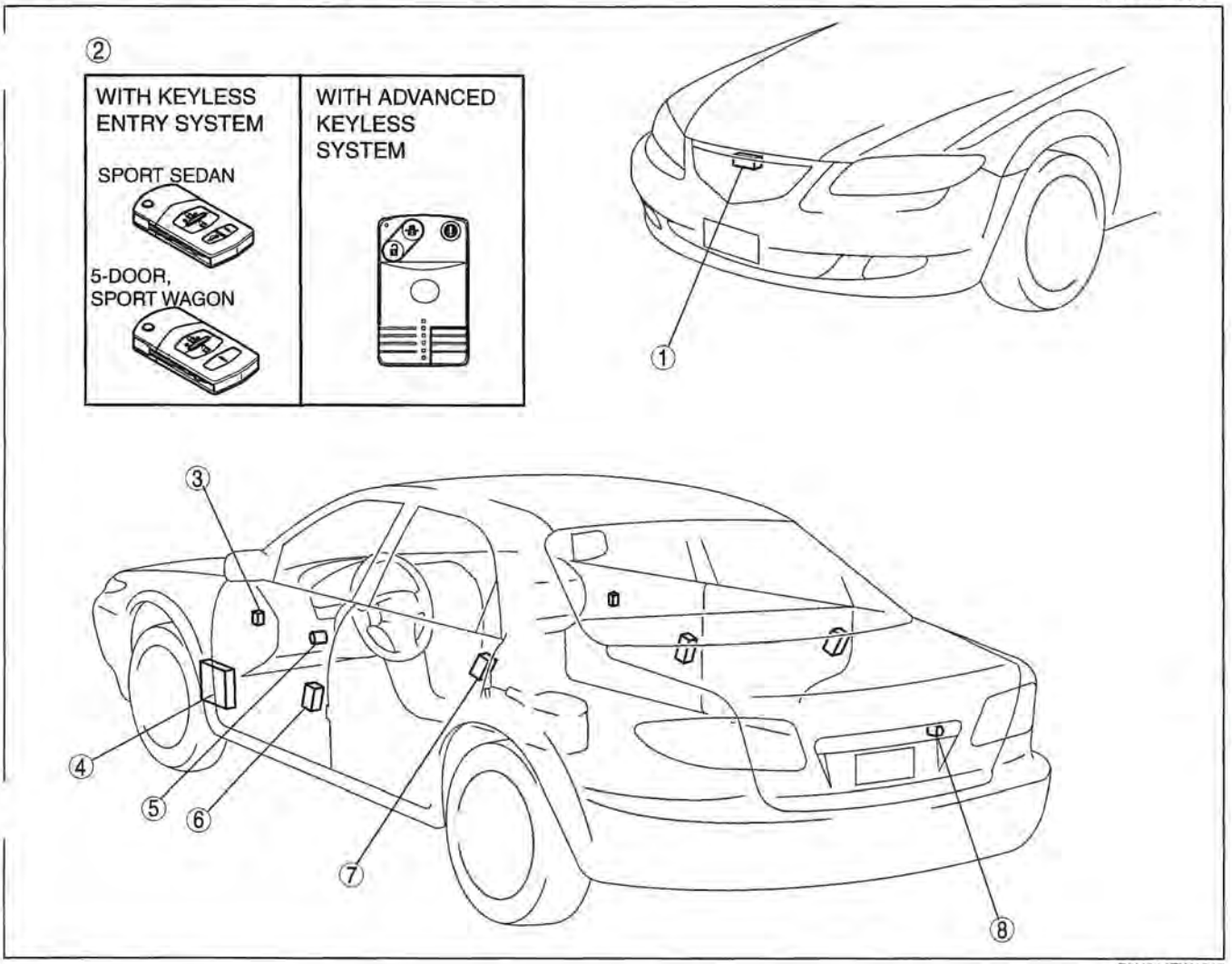

E6U914ZW1017

1	Hood switch (See 09–14–27 HOOD SWITCH INSPECTION)
2	Transmitter (See 09–14–23 TRANSMITTER BATTERY REPLACEMENT [KEYLESS ENTRY SYSTEM])
	Card key (transmitter) (See 09–14–22 CARD KEY BATTERY REPLACEMENT [WITH ADVANCED KEYLESS SYSTEM]) (See 09–14–15 CARD KEY ID CODE REGISTRATION [WITH ADVANCED KEYLESS SYSTEM])
3	Door lock switch (See 09–14–11 DOOR LOCK SWITCH REMOVAL/INSTALLATION) (See 09–14–11 DOOR LOCK SWITCH INSPECTION)
4	BCM (See 09–40–1 BODY CONTROL MODULE (BCM) REMOVAL/INSTALLATION) (See 09–40–2 BODY CONTROL MODULE (BCM) INSPECTION)

5	Front door key cylinder (See 09–14–8 FRONT DOOR KEY CYLINDER REMOVAL/INSTALLATION)
6	Front door lock-link switch (See 09–14–8 FRONT DOOR LATCH AND LOCK ACTUATOR REMOVAL/INSTALLATION) (See 09–14–8 FRONT DOOR LOCK ACTUATOR INSPECTION)
7	Rear door lock-link switch (See 09–14–9 REAR DOOR LATCH AND LOCK ACTUATOR REMOVAL/INSTALLATION) (See 09–14–9 REAR DOOR LOCK ACTUATOR INSPECTION)
8	Trunk key cylinder switch [Sport Sedan] (See 09–14–27 TRUNK KEY CYLINDER REMOVAL/INSTALLATION [SPORT SEDAN]) (See 09–14–27 TRUNK KEY CYLINDER SWITCH INSPECTION [SPORT SEDAN])

IMMOBILIZER SYSTEM LOCATION INDEX [WITH ADVANCED KEYLESS SYSTEM]

E6U091467000W05

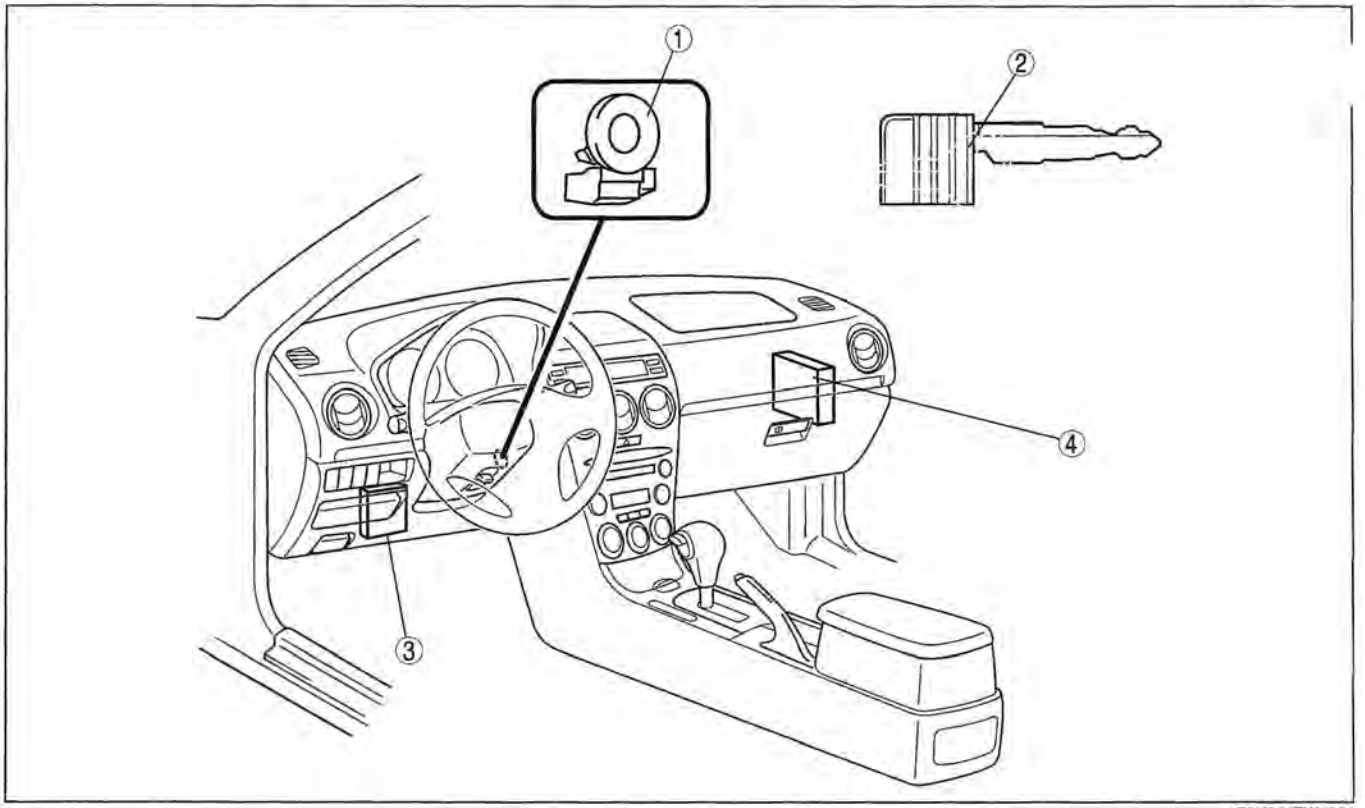

E6U914ZW1004

1	Coil (See 09–14–28 COIL REMOVAL/INSTALLATION)
2	Key (transponder) (See 09–14–28 IMMOBILIZER SYSTEM COMPONENT REPLACEMENT/KEY ADDITION AND CLEARING [WITH ADVANCED KEYLESS SYSTEM])

3	PCM (See 09–14–28 IMMOBILIZER SYSTEM COMPONENT REPLACEMENT/KEY ADDITION AND CLEARING [WITH ADVANCED KEYLESS SYSTEM])
4	Keyless control module (See 09–14–28 IMMOBILIZER SYSTEM COMPONENT REPLACEMENT/KEY ADDITION AND CLEARING [WITH ADVANCED KEYLESS SYSTEM])

IMMOBILIZER SYSTEM LOCATION INDEX [WITH KEYLESS ENTRY SYSTEM]

E6U091467000W01

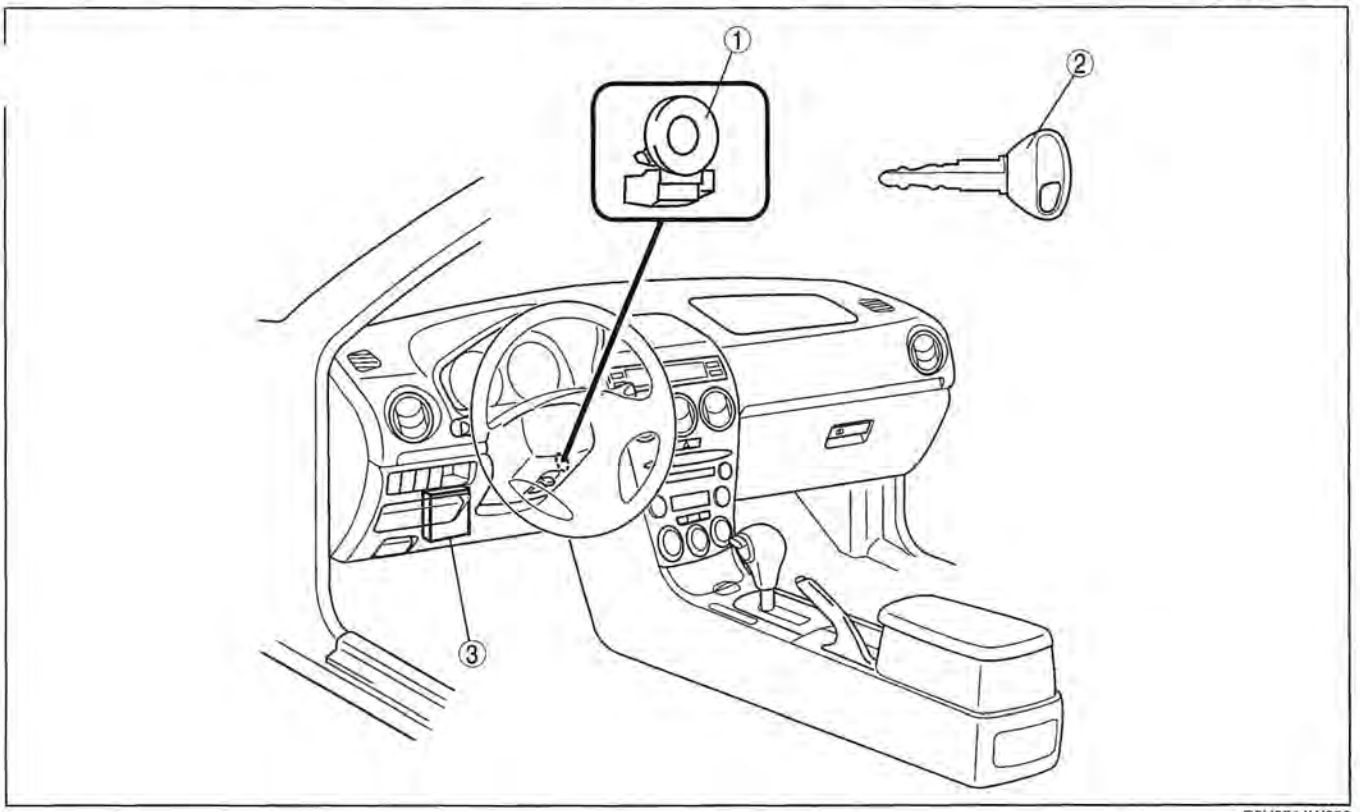

B6U0914W202

1	Coil (See 09–14–28 COIL REMOVAL/INSTALLATION)
2	Key (transponder) (See 09–14–39 IMMOBILIZER SYSTEM REPROGRAM PROCEDURE [WITH KEYLESS ENTRY SYSTEM])
3	PCM (See 09–14–39 IMMOBILIZER SYSTEM REPROGRAM PROCEDURE [WITH KEYLESS ENTRY SYSTEM])

FRONT DOOR KEY CYLINDER REMOVAL/INSTALLATION

E6U091458490W01

1. Disconnect the rod.
2. Remove the front outer handle.
3. Turn the key cylinder in the direction indicated by the arrow and move the tab to the notch.
4. Pull the key cylinder outward to remove it.
5. Install in the reverse order of removal.

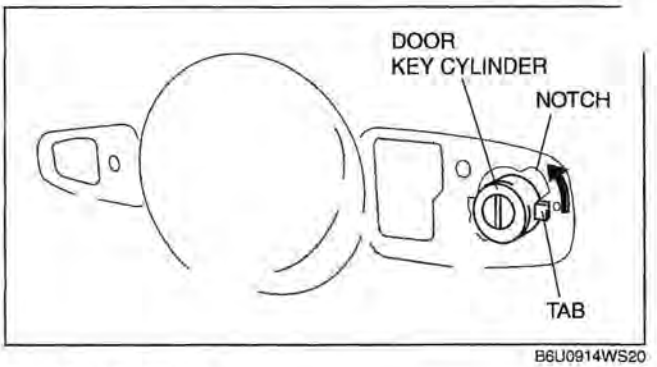

B6U0914WS20

FRONT DOOR LATCH AND LOCK ACTUATOR REMOVAL/INSTALLATION

E6U091458490W02

1. Remove the front door unit.
2. Remove the screws, then remove the front door latch and door lock actuator.
3. Install in the reverse order of removal.

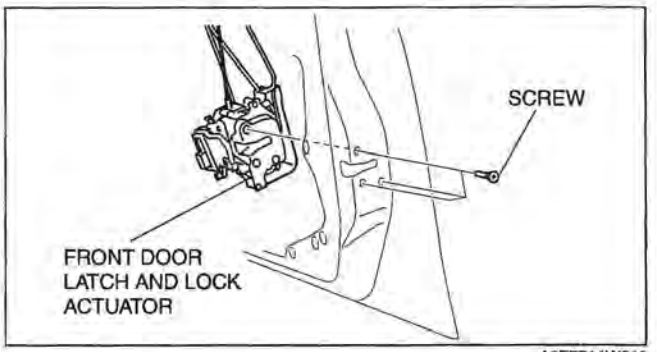

A6E7714W013

FRONT DOOR LOCK ACTUATOR INSPECTION

E6U091458490V

Door Lock Actuator

1. Disconnect the front door lock actuator connector.
2. Apply battery positive voltage to the front door lock actuator terminals and inspect the front door lock actuator operation.
   - If not as specified, replace the front door lock actuator.

Actuator operation	Connection	
	GND	B+
Lock	A (F)	B (E)
Unlock	A (F)	B (E)

( ) : RH

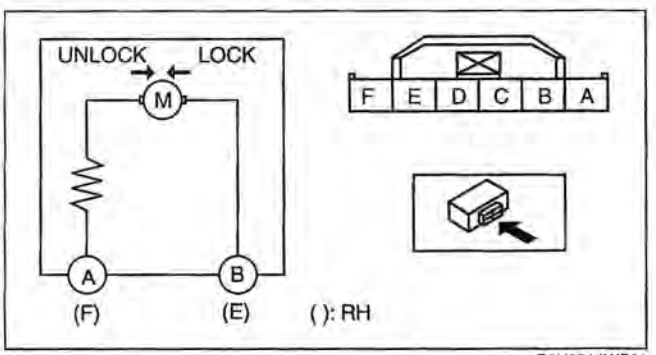

B6U0914WS01

Door Lock-link Switch

1. Disconnect the front door lock actuator connector.
2. Inspect for continuity between the door lock-link switch terminals using an ohmmeter.
   - If not as specified, replace the front door lock actuator.

O—O : Continuity

Lock knob position	Terminal		
	E (B)	F (A)	D (C)
Lock		O	O
Unlock	O	O	

( ): RH

B6U0914WS03

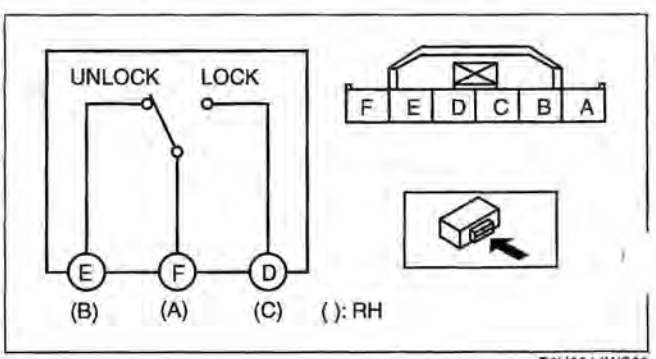

B6U0914WS02

Door Key Cylinder Switch

1. Disconnect the front door lock actuator connector.
2. Inspect for continuity between the door lock-link switch terminals using an ohmmeter.
   - If not as specified, replace the front door lock actuator.

O—O : Continuity O⩘O: Resistance

Key cylinder position	Terminal	
	C	F
Neutral		
Lock	O—⩘—O	R
Unlock	O——	—O

R: 950—1050 Ω

B6U0914WS05

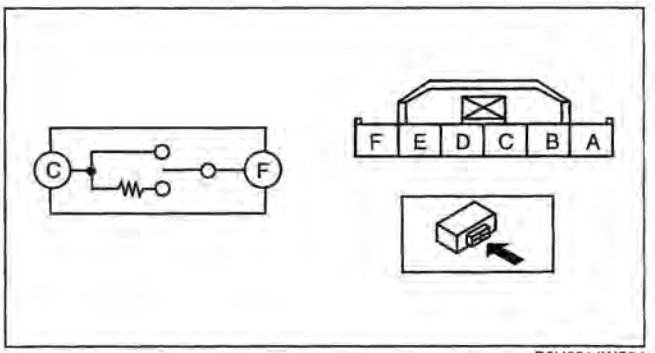

B6U0914WS04

REAR DOOR LATCH AND LOCK ACTUATOR REMOVAL/INSTALLATION

E6U091458490W04

1. Remove the rear door unit.
2. Remove the screws, then remove the rear door latch and lock actuator.
3. Install in the reverse order of removal.

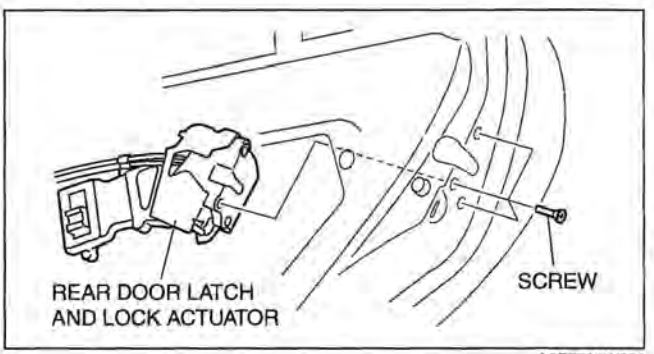

A6E7714W020

REAR DOOR LOCK ACTUATOR INSPECTION

E6U091458490W05

Door Lock Actuator

1. Disconnect the rear door lock actuator connector.
2. Apply battery positive voltage to the rear door lock actuator terminals and inspect the rear door lock actuator operation.
   - If not as specified, replace the rear door lock actuator.

Actuator operation	Connection	
	GND	B+
Lock	A (F)	B (E)
Unlock	B (E)	A (F)

( ) : RH

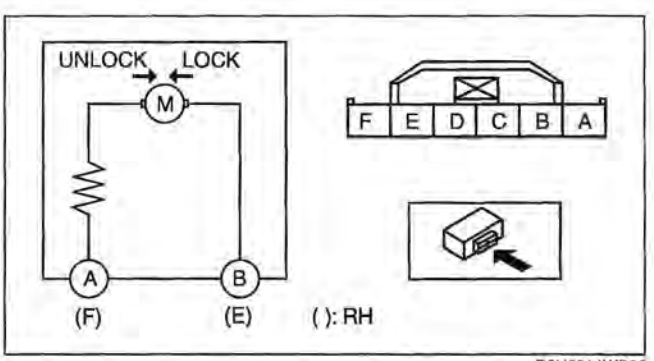

B6U0914WS06

Door Lock-link Switch (With Theft-deterrent System)

1. Disconnect the rear door lock actuator connector.
2. Inspect for continuity between the door lock-link switch terminals using an ohmmeter.
   - If not as specified, replace the rear door lock actuator.

O—O : Continuity

Lock knob position	Terminal	
	D (C)	F (A)
Lock		
Unlock	O——	—O

( ): RH

A6E7718W019

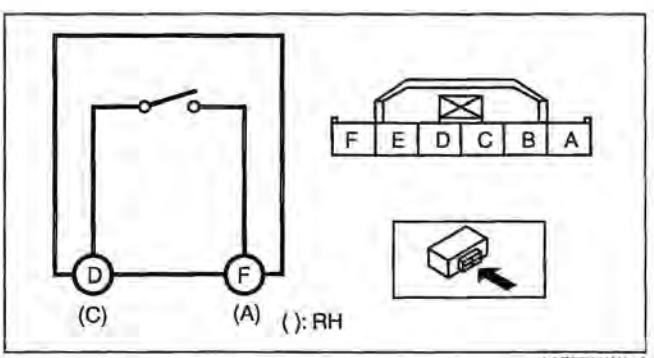

A6E7718W010

INNER HANDLE REMOVAL/INSTALLATION

E6U091459320W01

1. Remove the front door trim.
2. Using a flathead screwdriver, press and hold the tab in the direction indicated by arrow (1), and remove the shaft by pulling it in the direction indicated by arrow (2).
3. Pull off the inner handle, and remove the door lock knob cable and inner handle cable.
4. Install in the reverse order of removal.

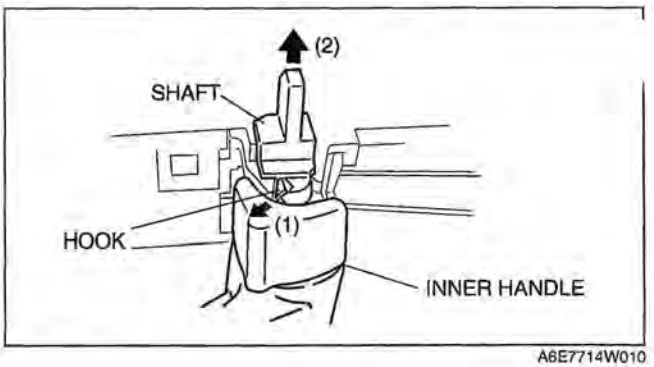

A6E7714W010

FRONT OUTER HANDLE REMOVAL/INSTALLATION

E6U091458410W01

1. Remove the front door glass.
2. Detach the outer handle and front door latch rod.
3. For protector-equipped vehicles, refer to key cylinder removal/installation to remove the protector.
4. Remove the bolts.

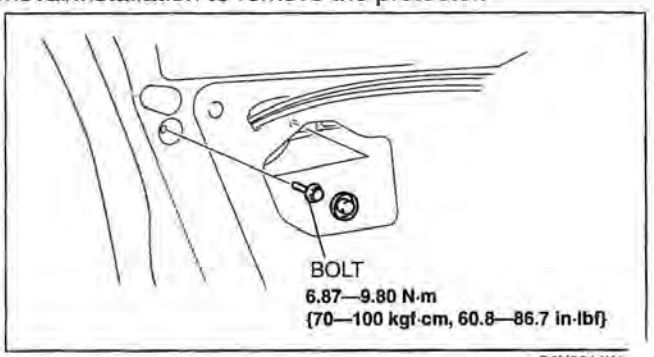

B6U0914W

5. With the rear side of the outer handle fixed and the outer handle lever pulled out (1), remove the rear side of the outer handle from the front door.
6. Pull out the front side of the outer handle from the front door.
7. Remove the request switch harness from the door. (with advanced keyless system)
8. Install in the reverse order of removal.

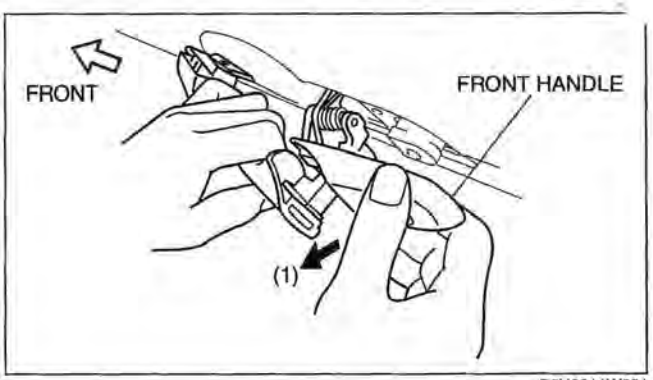

B6U0911W001

REAR OUTER HANDLE REMOVAL/INSTALLATION

E6U091458410W02

1. Remove the rear door glass.
2. Remove the rear door unit.
   Remove the rear door latch.
3. Remove the bolts.
5. Detach the rear outer handle and rear door latch rod.

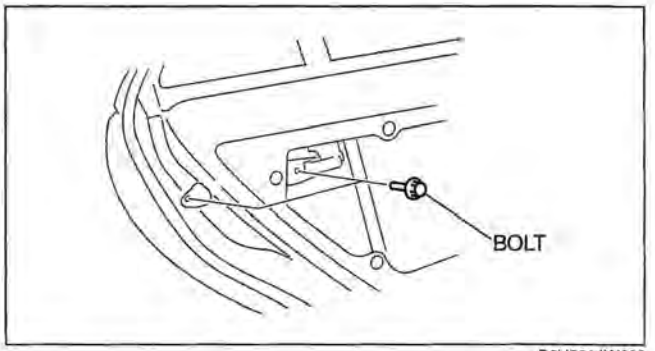

B6U0914W003

6. With the rear side of the rear outer handle fixed and the outer handle lever pulled out (1), remove the rear side of the rear outer handle from the rear door.
7. Pull out the front side of the rear outer handle from the rear door.
8. Install in the reverse order of removal.

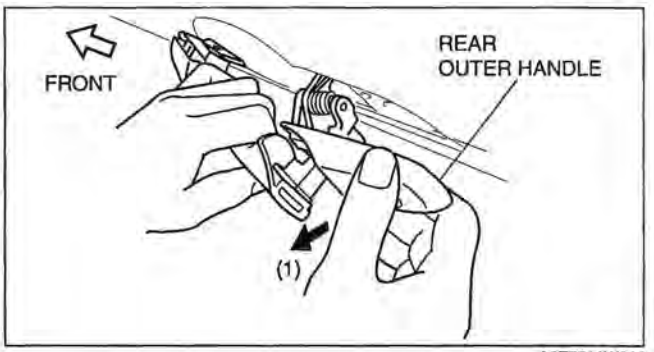

A6E7714W019

DOOR LOCK SWITCH REMOVAL/INSTALLATION

E6U091458490W06

Disconnect the negative battery cable.
2. Remove the inner handle cover. (See09–17–12 FRONT DOOR TRIM REMOVAL/INSTALLATION.)
3. Remove the screws, then remove the door lock switch.
4. Install in the reverse order of removal.

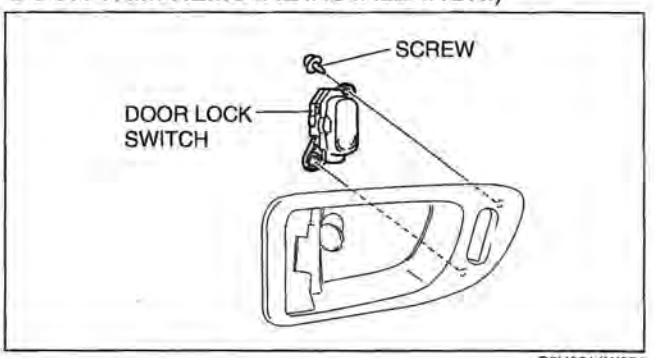

B6U0914W004

DOOR LOCK SWITCH INSPECTION

E6U091458490W07

1. Remove the door lock switch.
2. Inspect for continuity between the door lock switch terminals using an ohmmeter.
   - If not as specified, replace the door lock switch.

O—O : Continuity O-W-O : Resistance

Position	Terminal	
	A	B
Lock	O—W—O	R
Unlock	O	O

R: 940—1060 Ω

B6U0914WSS1

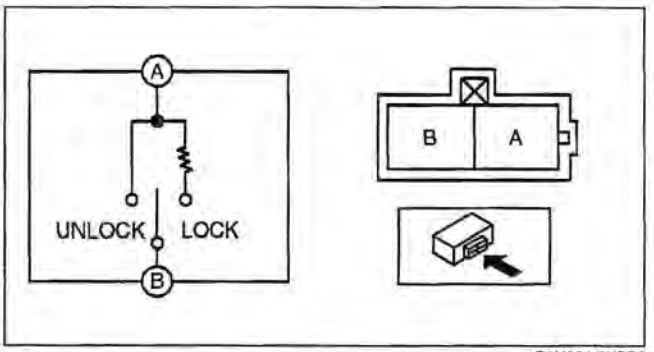

B6U0914WSS2

KEYLESS CONTROL MODULE REMOVAL/INSTALLATION [WITH ADVANCED KEYLESS SYSTEM]

E6U091467820W01

Note

- If the keyless control module is replaced, always perform the following procedure.

Without immobilizer system

— Card key programming (See 09–14–15 CARD KEY ID CODE REGISTRATION [WITH ADVANCED KEYLESS SYSTEM].)

— Steering lock unit programming (See 09–14–17 STEERING LOCK UNIT ID CODE REGISTRATION [WITH ADVANCED KEYLESS SYSTEM].)

With immobilizer system

— Card key programming (See 09–14–15 CARD KEY ID CODE REGISTRATION [WITH ADVANCED KEYLESS SYSTEM].)

— Steering lock unit programming (See 09–14–17 STEERING LOCK UNIT ID CODE REGISTRATION [WITH ADVANCED KEYLESS SYSTEM].)

— Immobilizer system resetting (See 09–14–28 IMMOBILIZER SYSTEM COMPONENT REPLACEMENT/KEY ADDITION AND CLEARING [WITH ADVANCED KEYLESS SYSTEM].)

1. Disconnect the negative battery cable.
2. Remove the glove compartment.
3. Remove the bolt.
4. While inclining the keyless control module along the body panel in the direction indicated by the arrow, disengage the bracket tab from the hole in the body panel.
5. Disconnect the keyless control module connector.
6. Remove the keyless control module.

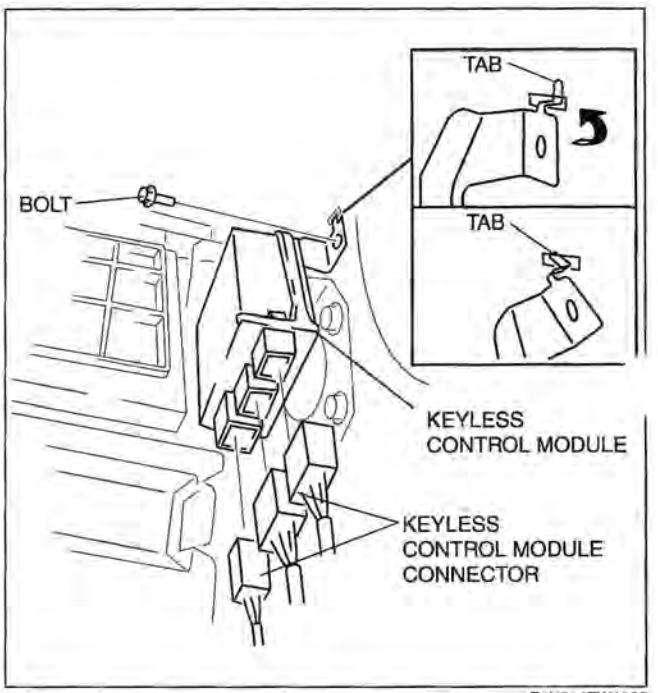

E6U914ZW1005

7. Remove the screw, then remove the bracket.

Note

- The screw which fixes the keyless control module and bracket is for a body ground connection. Be sure to secure the screw when installing.

8. Install in the reverse order of removal.

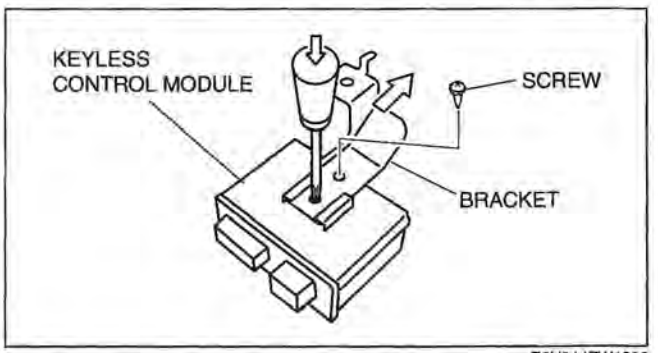

E6U914ZW1006

KEYLESS CONTROL MODULE INSPECTION [WITH ADVANCED KEYLESS SYSTEM]

E6U091467820W02

1. Measure the voltage or inspect for continuity according to the Terminal Voltage Table (Reference).
   - If the voltage is not as specified in the Terminal Voltage Table (Reference), inspect the parts under "Inspection item(s)" and related wiring harnesses.
2. If the system does not work properly even though the inspection items or related wiring harnesses do not have any malfunction, perform symptom troubleshooting [KEYLESS ENTRY SYSTEM].

Terminal Voltage Table (Reference)

KEYLESS CONTROL MODULE WIRING HARNESS SIDE CONNECTOR

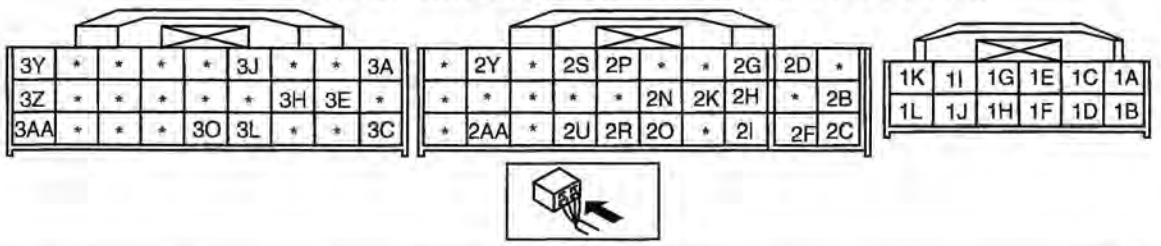

D6E914AW4013

Terminal	Signal name	Connected to	Measured condition	Voltage (V)/ Continuity	Inspection item(s)
1A	keyless antenna (driver-side)(+)	keyless antenna (driver-side)	Under any condition: Inspect for continuity to keyless antenna.	Continuity detected	keyless antenna (driver-side)
1B	keyless antenna (driver-side)(-)	keyless antenna (driver-side)	Under any condition: Inspect for continuity to keyless antenna.	Continuity detected	keyless antenna (driver-side)
1C	keyless antenna (passenger-side)(+)	keyless antenna (passenger-side)	Under any condition: Inspect for continuity to keyless antenna.	Continuity detected	keyless antenna (passenger-side)
1D	keyless antenna (passenger-side)(-)	keyless antenna (passenger-side)	Under any condition: Inspect for continuity to keyless antenna.	Continuity detected	keyless antenna (passenger-side)
1E	keyless antenna (interior, rear)(+)	keyless antenna (interior, rear)	Under any condition: Inspect for continuity to keyless antenna.	Continuity detected	keyless antenna (interior, rear)
1F	keyless antenna (interior, rear)(-)	keyless antenna (interior, rear)	Under any condition: Inspect for continuity to keyless antenna.	Continuity detected	keyless antenna (interior, rear)
1G	keyless antenna (trunk lid)(+)	keyless antenna (trunk lid)	Under any condition: Inspect for continuity to keyless antenna.	Continuity detected	keyless antenna (trunk lid)
1H	keyless antenna (trunk lid)(-)	keyless antenna (trunk lid)	Under any condition: Inspect for continuity to keyless antenna.	Continuity detected	keyless antenna (trunk lid)
1K	keyless antenna (interior, middle)(+)	keyless antenna (interior, middle)	Under any condition: Inspect for continuity to keyless antenna.	Continuity detected	keyless antenna (interior, middle)
1L	keyless antenna (interior, middle)(-)	keyless antenna (interior, middle)	Under any condition: Inspect for continuity to keyless antenna.	Continuity detected	keyless antenna (interior, middle)
2B	IG1	ENGINE 10 A fuse	Ignition switch is at ON position	B+	ENGINE 10 A fuse
			Ignition switch is at LOCK or ACC position	1.0 or less	
2C	GND	body ground	Under any condition: Inspect for continuity to ground.	Continuity detected	GND

Terminal	Signal name	Connected to	Measured condition	Voltage (V)/ Continuity	Inspection item(s)
2D	Power supply	ROOM 15 A fuse	Under any condition	B+	• ROOM 15 A fuse • Battery
2I	ACC	METER 10 A fuse	Ignition switch is at ACC position	B+	METER 10 A fuse
			Ignition switch is at LOCK or ON position	1.0 or less	
2K	Buzzer (interior)	Instrument cluster	Buzzer operated	1.0 or less	Instrument cluster
			Other	5.0	
2N	Start knob (push switch)	Steering lock unit	Start knob is Pushed	B+	Steering lock unit
			Other	1.0 or less	
2O	Key reminder switch	Steering lock unit	Key reminder switch is ON	B+	Steering lock unit
			Other	1.0 or less	
2P	Communication (steering lock unit)	Steering lock unit	Under any condition: Inspect for continuity to steering lock unit.	Continuity detected	Steering lock unit
2R	Communication (BCM)	BCM	Under any condition: Inspect for continuity to BCM.	Continuity detected	BCM
2S	Power supply (keyless receiver)	Keyless receiver	Under any condition	B+	Keyless receiver
2U	Communication (keyless receiver)	Keyless receiver	Under any condition: Inspect for continuity to keyless receiver.	Continuity detected	Keyless receiver
2Y*	Tx-SKE	Coil	Ignition switch is at ON position	B+	Coil
			Ignition switch is at LOCK or ACC position	1.0 or less	
2AA*	Rx-SKE	Coil	Ignition switch is at ON position	5.0	Coil
			Ignition switch is at LOCK or ACC position	1.0 or less	
3A*	Tx	PCM	Ignition switch is at ON position	B+	PCM
			Ignition switch is at LOCK or ACC position	1.0 or less	
3C*	Rx	PCM	Ignition switch is at ON position	B+	PCM
			Ignition switch is at LOCK or ACC position	1.0 or less	
3E	Lock signal input	Door lock-link switch	Driver-side door is locked: Inspect for continuity to ground.	Continuity detected	Door lock-link switch
			Driver-side door is unlocked: Inspect for continuity to ground.	No continuity	
3H	Request switch input (driver-side)	Request switch (driver-side)	Driver-side request switch is ON: Inspect for continuity to ground.	Continuity detected	Request switch (driver-side)
			Driver-side request switch is OFF: Inspect for continuity to ground.	No continuity	
3J	Request switch input (passenger-side)	Request switch (passenger-side)	Passenger-side request switch is ON: Inspect for continuity to ground.	Continuity detected	Request switch (passenger-side)
			Passenger-side request switch is OFF: Inspect for continuity to ground.	No continuity	

Terminal	Signal name	Connected to	Measured condition	Voltage (V)/ Continuity	Inspection item(s)
3L	Request switch input (trunk lid)	Request switch (trunk lid)	Trunk lid request switch is ON: Inspect for continuity to ground.	Continuity detected	Request switch (trunk lid)
			Trunk lid request switch is OFF: Inspect for continuity to ground.	No continuity	
3O	Brake signal	Brake switch	Stop light switch is ON	B+	Brake switch
			Stop light switch is OFF	1.0 or less	
3Y	Keyless beeper output	Keyless beeper	Keyless beeper operated	B+	Keyless beeper
			Other	1.0 or less	
3Z	HS-CAN+	PCM	Under any condition: • Inspect for continuity to PCM. • Inspect for continuity to instrument cluster.	Continuity detected	-
3AA	HS-CAN-	PCM	Under any condition: • Inspect for continuity to PCM. • Inspect for continuity to instrument cluster.	Continuity detected	-

* : With immobilizer system

CARD KEY ID CODE REGISTRATION [WITH ADVANCED KEYLESS SYSTEM]

E6U091469000W09

09-14

Caution

- **Do not place the following devices in the vehicle while programming, otherwise programming cannot be performed.**
  - **— WDS or equivalent**
  - **— Personal computer**
  - **— Device that can send/receive radio waves**
- **Verify that the other transmitter is not being operated around the servicing area during card key programming.**

Note

- Use the WDS or equivalent and start programming if the condition corresponds to the following:
  - — One or No Programmed Card Keys
  - — Keyless control module is replaced
- If six card keys are already programmed, the programming mode does not activate. If programming is needed, use the WDS or equivalent to erase the unnecessary card key programming.

With two programmed card keys

1. Bring the programmed card keys (2) and a unprogrammed card key into the vehicle.
2. Close all doors.
3. Insert the supplementary key into the ignition key cylinder.

Note

- Complete the procedures up to Step 7 within **30 s** after the supplementary key is inserted.

4. Turn the ignition switch to the ON position.
5. Press the UNLOCK button on card key 1.
6. Press the UNLOCK button on card key 2.
7. From the ignition switch in the ON position, switch the ignition switch in the order indicated below.
   — ACC→ON→ACC→ON→ACC→ON
8. Open the driver-side front door, press the door switch **twice**, and then close the door.

Note

- After Step 3 is completed and the card key programming mode is activated, the door lock actuator operates to lock, and then operates to unlock.
- If the door lock actuator does not operate, repeat the procedure from Step 2.

9. Press the UNLOCK button on the unprogrammed card key **twice**.

Note
- After Step 8 is completed and the card key is programmed, the door lock actuator operates to lock, and then operates to unlock.

10. If programming more card keys, remove the supplementary key once, and then repeat the procedure from Step 2.

Using WDS or Equivalent

1. Fully lower the driver-side door glass.
2. Connect the WDS or equivalent to the DLC-2.
3. Pull out the WDS or equivalent cable from the door glass opening and set the WDS or equivalent outside the vehicle.

Caution
- **Protect the cable and body contact area with a clean rag, otherwise they could be damaged.**

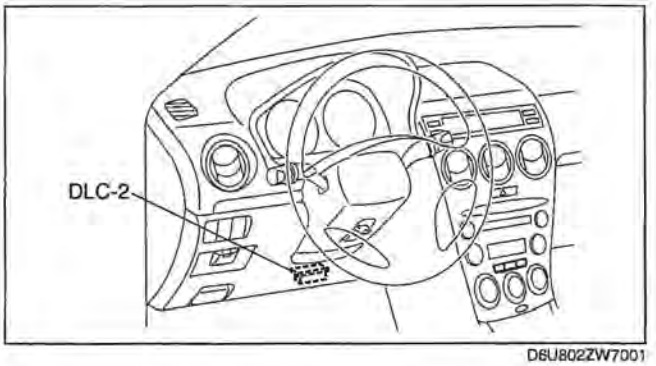

D6U802ZW7001

4. Select "BODY/SECURITY/PATS (immobilizer)" from the WDS or equivalent screen menu.
5. Security access begins and the WDS or equivalent displays the "OUT-CODE".

Note
- When "OUT-CODE" is first displayed, turning the ignition switch from the LOCK to the ON position **5 times** will change the "OUT-CODE".

6. Input the "IN-CODE" that corresponds to the "OUT-CODE " displayed on the WDS or equivalent screen.
7. Select "CARD KEY PROGRAMMING" from the WDS or equivalent screen menu.

Note
- After Step 7 is completed and the card key programming is activated, the door lock actuator operates to lock, and then operates to unlock.

8. Press the unprogrammed card key UNLOCK button **twice**.

Note
- After Step 8 is completed and the card key is programmed, the door lock actuator operates to lock, and then operates to unlock.

9. If programming more card keys, remove the supplementary key once, and then repeat the procedure from Step 7 by following the instructions on the WDS or equivalent screen.

CLEARING CARD KEY

E6U091469000W10

1. Fully lower the driver-side door glass.
2. Connect the WDS or equivalent to the DLC-2.
3. Pull out the WDS or equivalent cable from the door glass opening and set the WDS or equivalent outside the vehicle.

Caution
- **Protect the cable and body contact area with a clean rag, otherwise they could be damaged.**

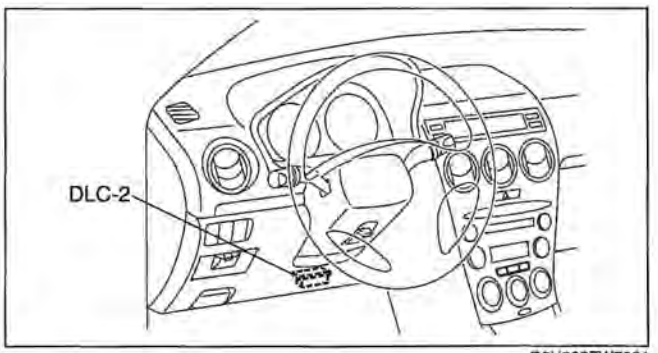

D6U802ZW7001

4. Select "BODY/SECURITY/PATS (immobilizer)" from the WDS or equivalent screen menu.
5. Security access begins and the WDS or equivalent displays the "OUT-CODE".

Note
- When "OUT-CODE" is first displayed, turning the ignition switch from the LOCK to the ON position **5 time** will change the "OUT-CODE".

6. Input the "IN-CODE" that corresponds to the "OUT-CODE" displayed in the WDS or equivalent screen.
7. Select "CARD KEY CLEARING" from the WDS or equivalent screen menu.

STEERING LOCK UNIT ID CODE REGISTRATION [WITH ADVANCED KEYLESS SYSTEM]

E6U091469000W11

Caution

- **Do not place the following devices in the vehicle while programming, otherwise programming cannot be performed.**
  - **— WDS or equivalent**
  - **— Personal computer**
  - **— Device that can send/receive radio waves**

Note

- The steering lock unit and steering lock component are a single unit. Therefore, replace the steering lock component when replacing steering lock unit. (See 06–12–7 STEERING WHEEL AND COLUMN REMOVAL/INSTALLATION.)
- For this procedure, a programmed card key is necessary. If there is no programmed card key, perform the steering lock unit programming after the card key programming.

1. Bring the programmed card key into the vehicle.
2. Fully lower the driver-side door glass.
3. Connect the WDS or equivalent to the DLC-2.
4. Pull out the WDS or equivalent cable from the door glass opening and set the WDS or equivalent outside the vehicle.
5. Select "BODY/SECURITY/PATS (immobilizer)" from the WDS or equivalent screen menu.
6. Perform the security access according to the directions on the WDS or equivalent screen. (See 09–14–39 SECURITY ACCESS PROCEDURE.)
7. The security access begins and the WDS or equivalent displays "OUT-CODE".

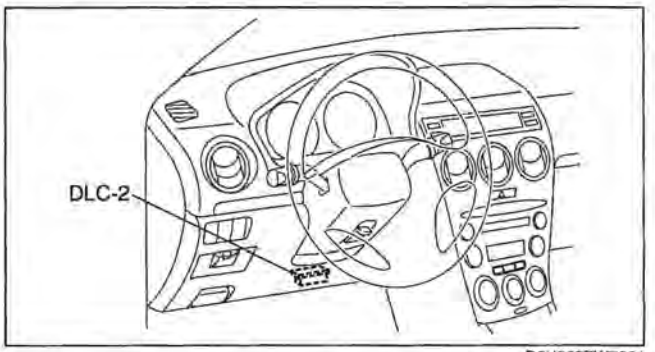

D6U802ZW7001

Note

- When "OUT-CODE" is first displayed, turning the ignition switch from the LOCK to the ON position **5 times** will change the "OUT-CODE".

8. Input the "IN-CODE" that corresponds to the "OUT-CODE" displayed on the WDS or equivalent screen.
9. Select "STEERING LOCK UNIT PROGRAMMING" and perform procedures according to the directions on the WDS or equivalent screen.

KEYLESS CONTROL MODULE CONFIGURATION [WITH ADVANCED KEYLESS SYSTEM]

E6U091469000W12

1. Connect the WDS or equivalent to the DLC-2.
2. Select "Module Programming".
3. Select "Configuration/PMI".
4. Select "RKE" and perform procedures according to directions on the screen.

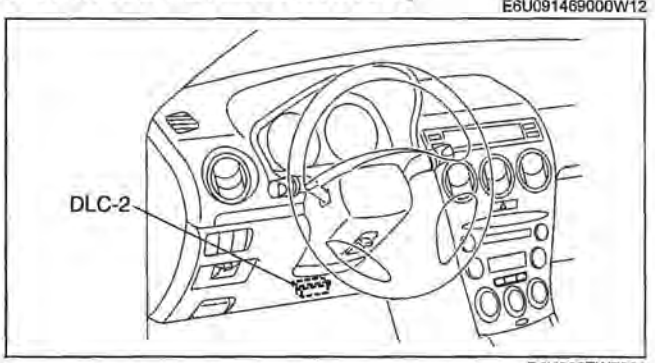

D6U802ZW7001

CUSTOMIZED FUNCTION SETTING PROCEDURE

E6U091469000W13

1. Connect the WDS or equivalent to the DLC-2.
2. Select "Module Programming".
3. Select "Programming change available parameter/RKE".
4. Select the item name, and than select either "Disable/Enable".

Items

- Automatic Lock
- Answer Back Buzzer
- Card Key Carrying Out Alarm
- Low Battery Warning

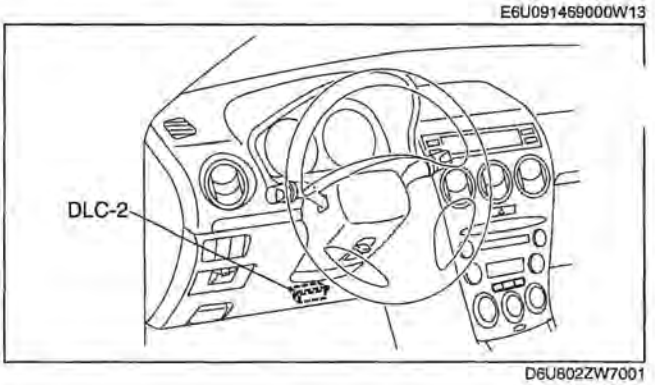

D6U802ZW7001

KEYLESS RECEIVER REMOVAL/INSTALLATION

E6U091469000W07

1. Disconnect the negative battery cable.
2. Remove the glove compartment. (See 09–17–9 GLOVE COMPARTMENT REMOVAL/INSTALLATION.)
3. Disconnect the keyless receiver module connector.
4. Remove the nut, then remove the keyless receiver.
5. Install in the reverse order of removal.

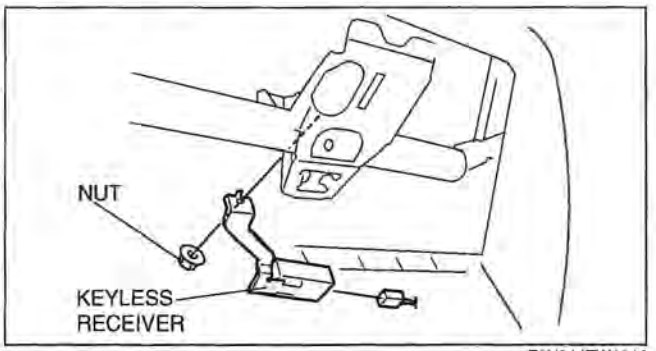

E6U914ZW1016

KEYLESS RECEIVER INSPECTION

E6U091469000W

1. Measure the voltage or inspect for continuity according to the Terminal Voltage Table (Reference).
   - If the voltage is not as specified in the Terminal Voltage Table (Reference), inspect the parts under "Inspection item(s)" and related wiring harnesses.
2. If the system does not work properly even though the inspection items or related wiring harnesses do not have any malfunction, perform symptom troubleshooting [KEYLESS ENTRY SYSTEM].

Terminal Voltage Table (Reference)

KEYLESS RECEIVER
WIRING HARNESS-SIDE CONNECTOR

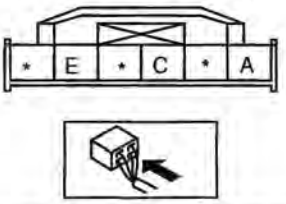

E6U914ZW1007

Terminal	Signal name	Connected to	Measured condition	Voltage (V)/ Continuity	Inspection item(s)
A	Power supply	• BCM	Under any condition	B+	• BCM • Related wiring harnesses
C	Data	• BCM	• Under any condition: Inspect the wiring harness between the keyless receiver and BCM terminal 7I for continuity.	Continuity detected	• BCM • Related wiring harnesses
E	GND	Body ground	Under any condition: Inspect for continuity to ground.	Continuity detected	GND

KEYLESS ANTENNA REMOVAL/INSTALLATION

E6U091469000W14

Driver-side/passenger-side

1. Disconnect the negative battery cable.
   Remove the front door trim. (See 09–17–12 FRONT DOOR TRIM REMOVAL/INSTALLATION.)
2. Remove the screws.
4. Disconnect the connector, then remove the keyless antenna.

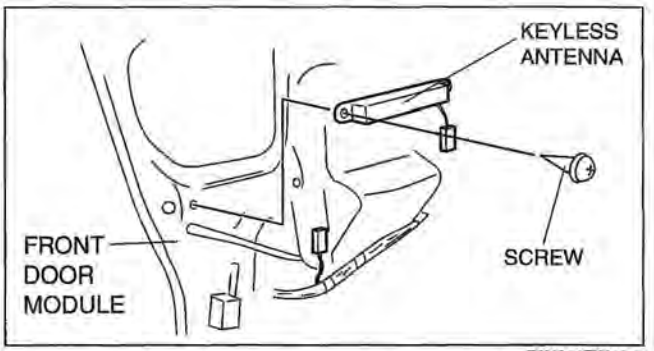

E6U914ZW1010

Trunk Lid

1. Disconnect the negative battery cable.
2. Remove the screws.
3. Disconnect the connector, then remove the keyless antenna.

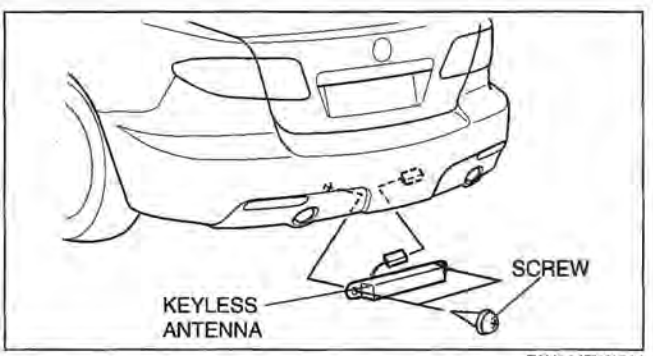

E6U914ZW1014

Interior, Front

1. Disconnect the negative battery cable.
2. Remove the console. (See 09–17–8 CONSOLE REMOVAL/INSTALLATION.)
3. Remove the bolts.
4. Disconnect the connector, then remove the keyless antenna.

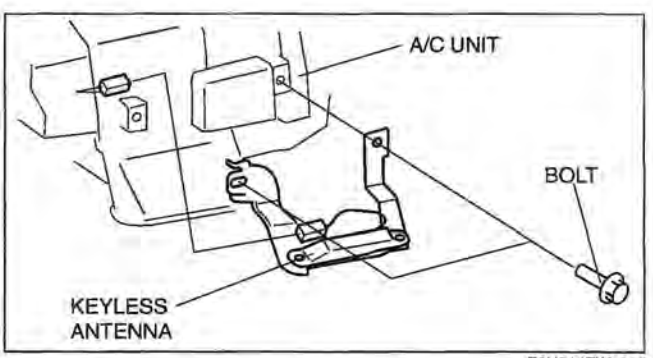

E6U914ZW1015

Interior, Middle

1. Disconnect the negative battery cable.
2. Remove the console. (See 09–17–8 CONSOLE REMOVAL/INSTALLATION.)
3. Remove the screws.
4. Disconnect the connector, then remove the keyless antenna.

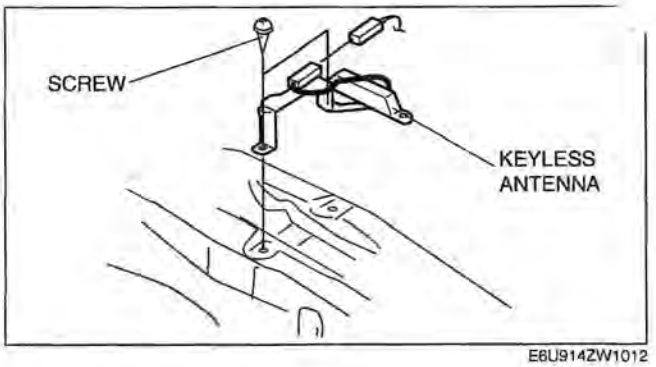

E6U914ZW1012

Interior, Rear

1. Disconnect the negative battery cable.
2. Remove the partition board. (See 09–17–19 PARTITION BOARD REMOVAL/INSTALLATION.)

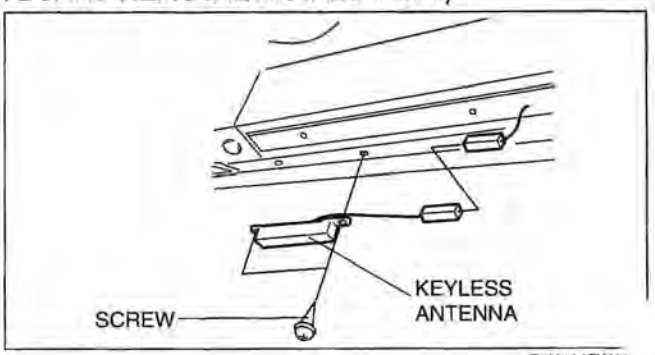

E6U914ZW10

KEYLESS BEEPER REMOVAL/INSTALLATION

E6U091469000W21

1. Disconnect the negative battery cable.
2. Remove the front door trim. (See 09–17–12 FRONT DOOR TRIM REMOVAL/INSTALLATION.)
3. Remove the front door speaker. (See 09–17–12 FRONT DOOR TRIM REMOVAL/INSTALLATION.)
4. Remove the screws.
5. Disconnect the connector.
6. Remove the keyless beeper from the speaker installation hole.

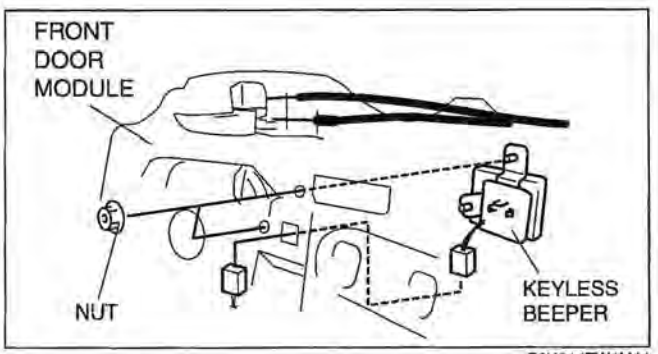

E6U914ZW1M11

REQUEST SWITCH REMOVAL/INSTALLATION

E6U091469000W22

Deiver-side/passenger-side

1. Disconnect the negative battery cable.
   Remove the front door trim. (See 09–17–12 FRONT DOOR TRIM REMOVAL/INSTALLATION.)
3. Remove the front outer handle. (See 09–14–10 FRONT OUTER HANDLE REMOVAL/INSTALLATION.)
4. Remove the screws A, then remove the handle seat and plate.
5. Remove screw B, then remove the request switch.

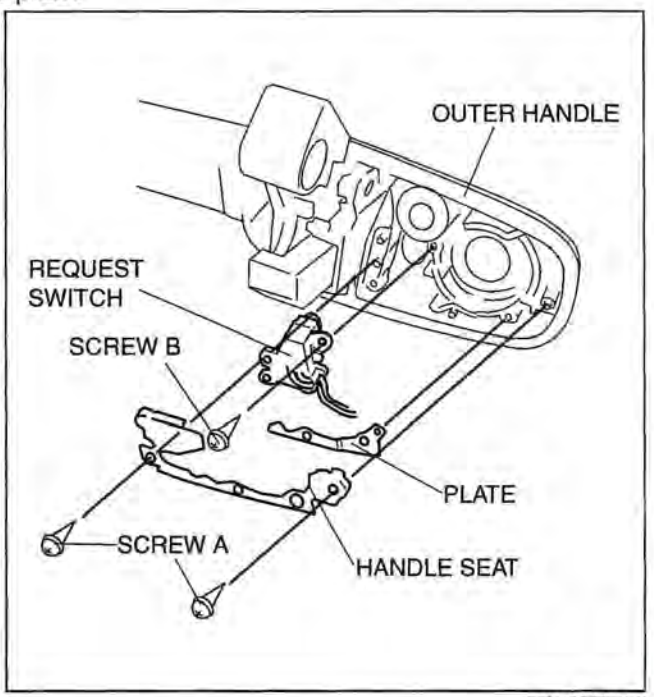

E6U914ZW1009

ınk Lld

1. Disconnect the negative battery cable.
2. Remove the rear finisher. (See 09–16–7 REAR FINISHER REMOVAL/INSTALLATION.)
3. Remove the screws, then remove the request switch.

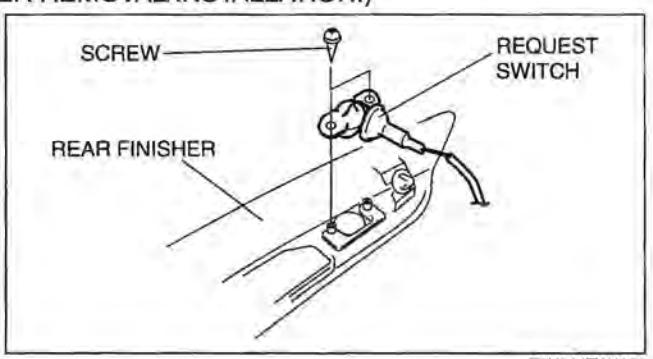

E6U914ZW1008

REQUEST SWITCH INSPECTION

E6U091469000W23

1. Inspect for continuity between request switch terminals A and B.
   - If not as specified, replace the request switch.

O—O : Continuity

Switch position	Terminal	
	A	B
Push (ON)	O	O
Not push (OFF)		

E6U914ZW1018

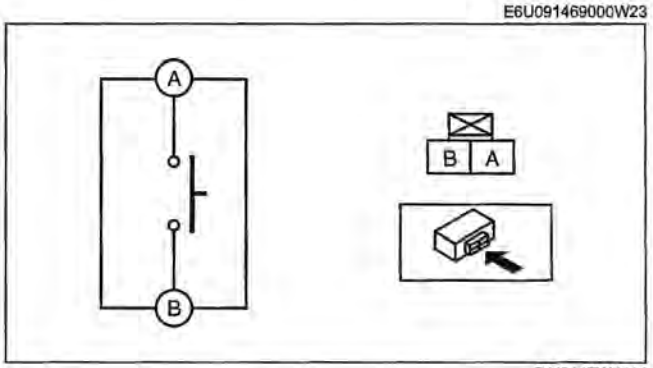

CJJ914ZW5014

CARD KEY BATTERY REPLACEMENT [WITH ADVANCED KEYLESS SYSTEM]

E6U091467543W03

Card Key Type

1. Pull out the auxiliary key.

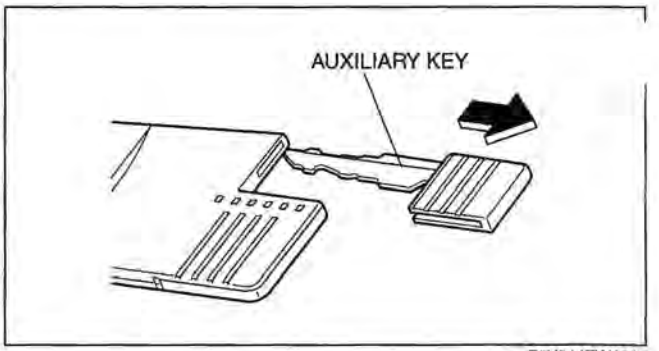

E6U914ZW1019

2. Replace the cap using a flathead screwdriver, then rotate and remove the cap.

   Caution
   - **Do not turn the cap excessively. The cap may be damaged.**

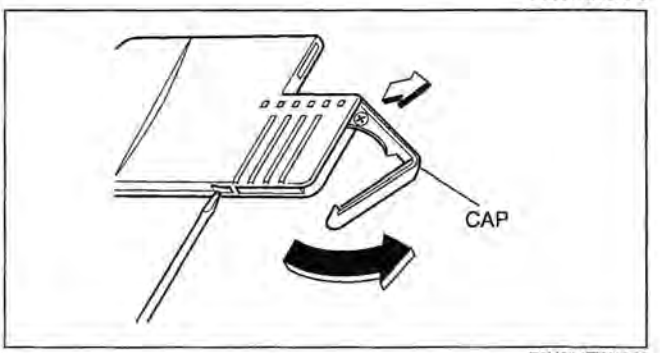

E6U914ZW1020

3. Insert a flathead screwdriver into the crack and press the battery out.

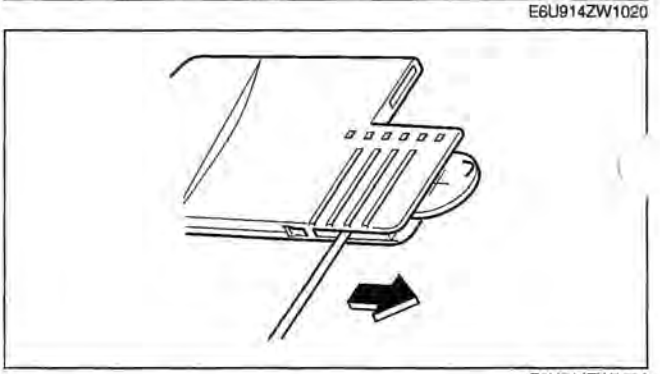

E6U914ZW1021

4. Insert the new battery (CR2025) with the positive pole (+) facing the (+) mark on the cap.

   Battery specification
   Lithium CR2025 × 1

   Note
   - The batteries will last about **1 years** when used **10 times** a day.

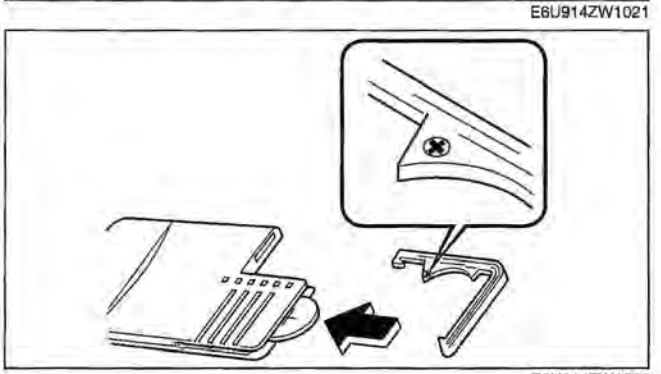

E6U914ZW1022

5. Rotate and close the cap.
6. Reinsert the auxiliary key.

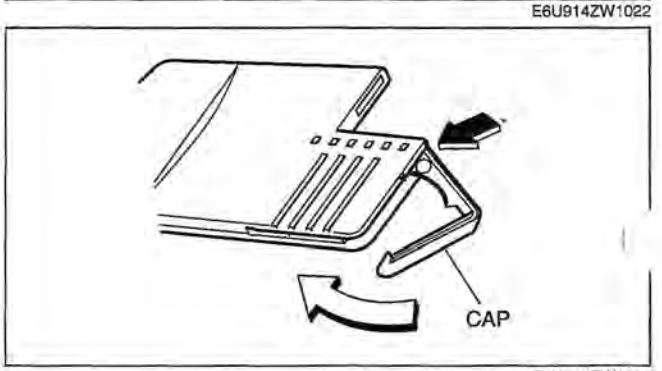

E6U914ZW1023

TRANSMITTER BATTERY REPLACEMENT [KEYLESS ENTRY SYSTEM]

EBU091467543W02

Retractable Key Type

1. Insert a small screwdriver into the slot and push the tab to remove the key from the transmitter.

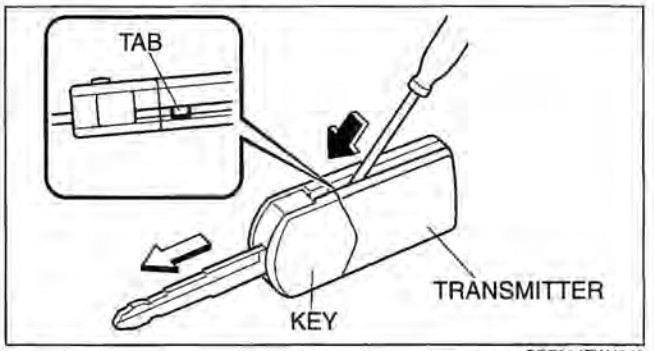

CBE914ZW4002

2. Insert a small screwdriver into the slot and gently pry open the transmitter.

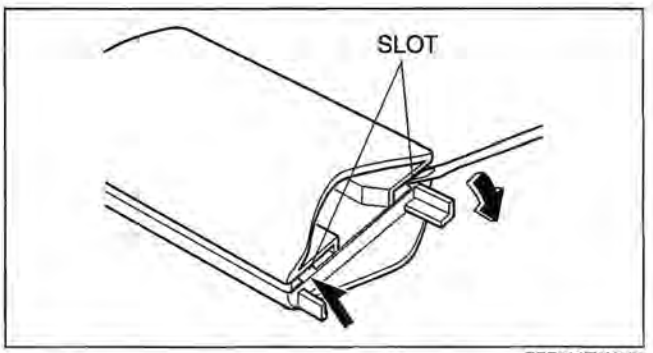

CBE914ZW4003

3. Remove the battery.

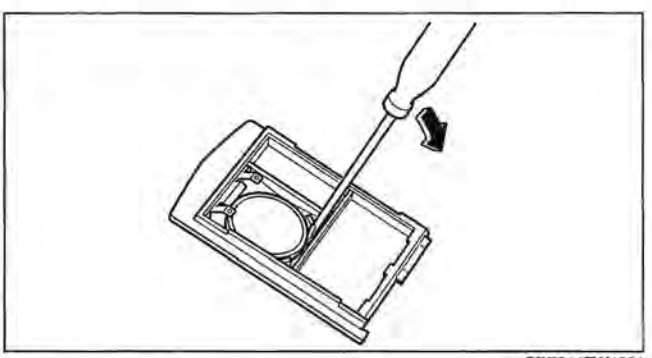

CBE914ZW4004

4. Put in the new battery (CR1620) with the positive pole (+) facing down.
5. Align the front and back covers and snap the transmitter shut.

Battery specification
Lithium CR1620 × 1

Note
- The batteries will last about **2 years** when used **10 times** a day.

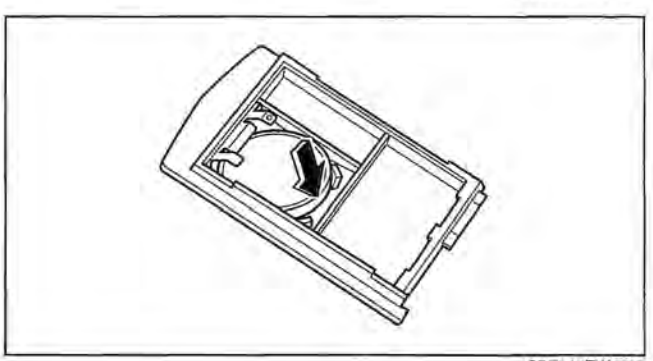

CBE914ZW4005

6. Install the key to the transmitter.

FUEL-FILLER LID AND OPENER REMOVAL/INSTALLATION

E6U091466640W01

1. To remove the fuel-filler lid opener, remove the left side trunk side trim.
2. To remove the fuel-filler lid opener cable, perform the following and partially peel back the floor covering.
   (1) Remove the driver-side front seat.
   (2) Remove the driver-side front scuff plate.
   (3) Remove the driver-side rear scuff plate.
   (4) Remove the driver-side B-pillar lower trim.
   (5) Remove the driver-side tire house trim.
3. Remove in the order indicated in the table.

1	Fuel-filler lid
2	Lift spring
3	Fuel-filler lid opener
4	Cover
5	Fuel-filler lid opener lever
6	Fuel-filler lid opener cable

4. Install in the reverse order of removal.
5. Adjust the fuel-filler lid. (See 09–10–3 FUEL-FILLER LID ADJUSTMENT.)

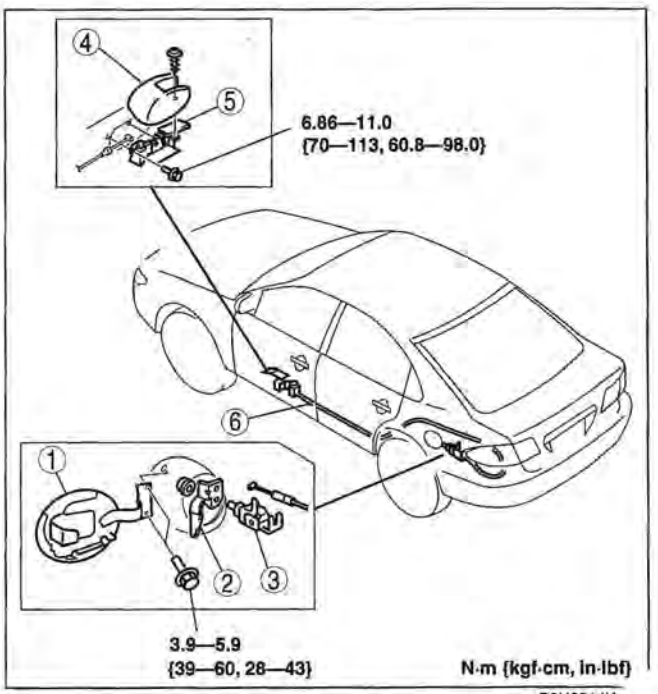

B6U0914W

TRUNK LID OPENER REMOVAL/INSTALLATION [SPORT SEDAN]

E6U091467002W01

1. Disconnect the negative battery cable.
2. Disconnect the trunk lid opener connector.
3. Squeeze the tabs of the connector and pull it downward to remove it.
4. Disconnect the rod
5. Remove the bolts
6. Install in the reverse order of removal.

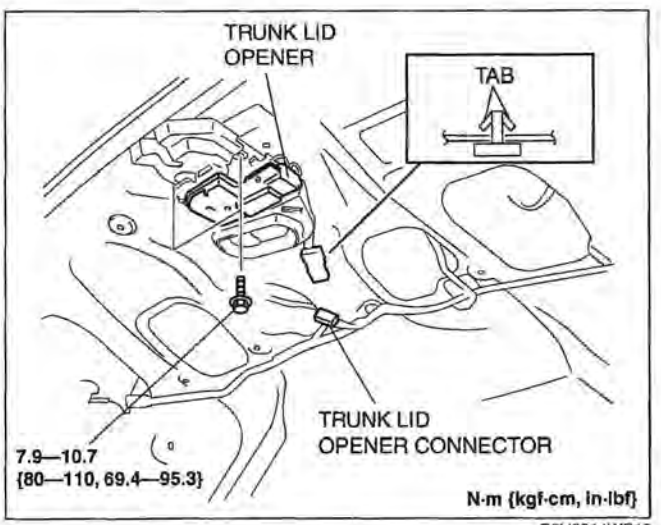

B6U0914WS16

TRUNK LID OPENER INSPECTION [SPORT SEDAN]

E6U091467002W02

1. Disconnect the trunk lid opener connector.
2. Apply battery positive voltage to the trunk lid opener terminals and inspect the trunk lid opener operation.
   - If not as specified, replace the trunk lid opener.

Actuator operation	Connection	
	B+	GND
Open	B	C

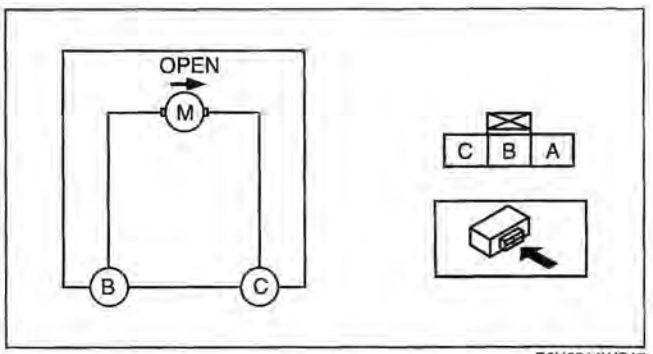

B6U0914WS17

LIFTGATE OUTER HANDLE REMOVAL/INSTALLATION [5-DOOR, SPORT WAGON]

E6U091462490W01

1. Disconnect the negative battery cable.
2. Remove the liftgate upper trim. (See 09–17–21 LIFTGATE UPPER TRIM REMOVAL/INSTALLATION [5-DOOR, SPORT WAGON].)
3. Remove the liftgate side trim. (See 09–17–22 LIFTGATE SIDE TRIM REMOVAL/INSTALLATION [5-DOOR, SPORT WAGON].)
4. Remove the liftgate lower trim. (See 09–17–23 LIFTGATE LOWER TRIM REMOVAL/INSTALLATION [5-DOOR, SPORT WAGON].)
5. Remove the rear finisher. (See 09–16–7 REAR FINISHER REMOVAL/INSTALLATION.)
6. Remove in the order indicated in the table.

1	Nut
2	Liftgate outer handle

7. Install in the reverse order of removal.

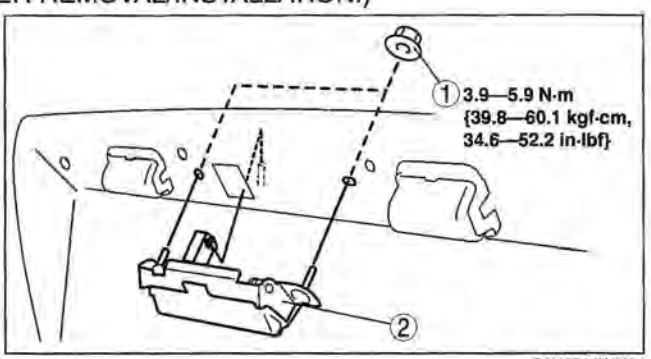

C6U0914WM04

LIFTGATE LATCH AND LOCK ACTUATOR REMOVAL/INSTALLATION [5-DOOR, SPORT WAGON]

E6U091462490W02

1. Disconnect the negative battery cable.
2. Remove the liftgate upper trim. (See 09–17–21 LIFTGATE UPPER TRIM REMOVAL/INSTALLATION [5-DOOR, SPORT WAGON].)
3. Remove the liftgate side trim. (See 09–17–22 LIFTGATE SIDE TRIM REMOVAL/INSTALLATION [5-DOOR, SPORT WAGON].)
4. Remove the liftgate lower trim. (See 09–17–23 LIFTGATE LOWER TRIM REMOVAL/INSTALLATION [5-DOOR, SPORT WAGON].)
5. Remove in the order indicated in the table.

1	Bolt
2	Connector
3	Liftgate latch and lock actuator

6. Install in the reverse order of removal.

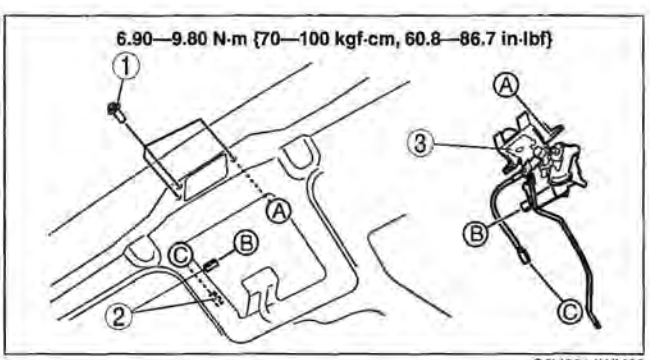

C6U0914WM02

LIFTGATE LOCK ACTUATOR INSPECTION [5-DOOR, SPORT WAGON]

E6U091462490W03

1. Apply battery positive voltage and connect ground to the corresponding liftgate lock actuator terminals, and inspect the liftgate lock actuator operation.
   - If not as specified, replace the liftgate latch and lock actuator.

Lock actuator operation	Connection	
	B+	GND
Lock	A	B
Unlock	B	A

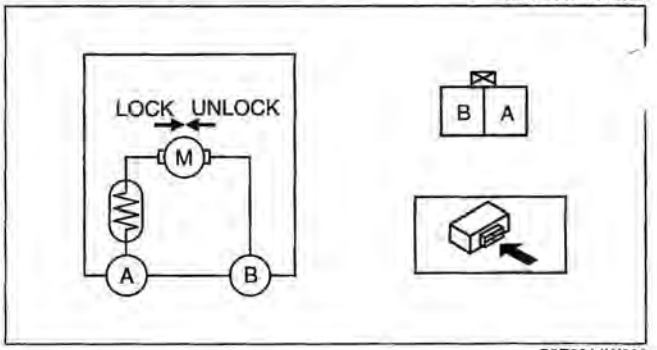

B3E0914W028

TRUNK LID OPENER SWITCH REMOVAL/INSTALLATION [SPORT SEDAN]

E6U091467002W03

1. Disconnect the negative battery cable.
2. Remove the lower panel.
3. Disconnect the trunk lid open switch connector.
4. Squeeze the tabs of the trunk lid open switch and pull it toward you to remove it.
5. Remove the trunk lid open switch.
6. Install in the reverse order of removal.

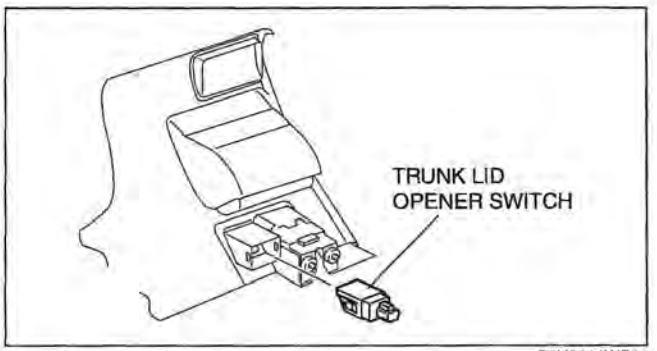

B6U0914WS21

TRUNK LID OPEN CANCEL SWITCH REMOVAL/INSTALLATION

E6U091467002

1. Disconnect the negative battery cable.
2. Remove the glove compartment.
3. Squeeze the tabs of the trunk lid open cancel switch and pull it forward to remove it.
4. Disconnect the trunk lid open cancel switch connector.
5. Remove the trunk lid open cancel switch.
6. Install in the reverse order of removal.

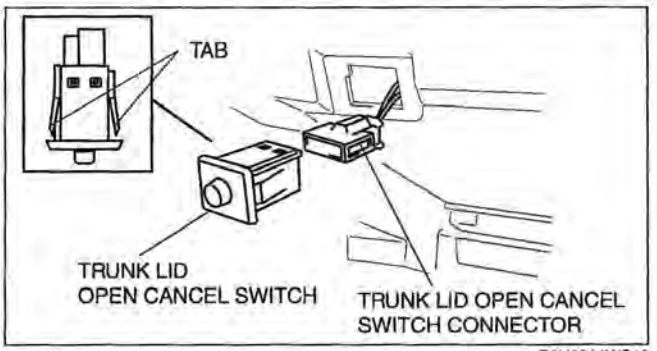

B6U0914WS13

TRUNK LID OPEN CANCEL SWITCH INSPECTION

E6U091467002W05

1. Remove the trunk lid open cancel switch.
2. Inspect for continuity between the trunk lid open cancel switch terminals using an ohmmeter.
   - If not as specified, replace the trunk lid open cancel switch.

O—O : Continuity

Operation	Terminal	
	A	B
On	O	O
Off		

B6U0914WS12

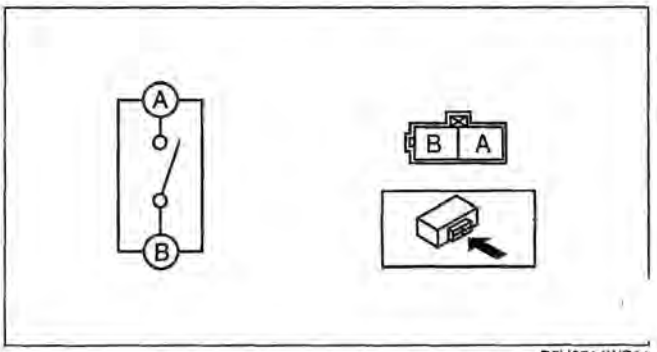

B6U0914WS11

TRUNK KEY CYLINDER REMOVAL/INSTALLATION [SPORT SEDAN]

E6U091467002W06

1. Disconnect the negative battery cable.
2. Remove the trunk key cylinder switch connector.
3. Remove the nuts
4. Remove the trunk key cylinder.
5. Install in the reverse order of removal.

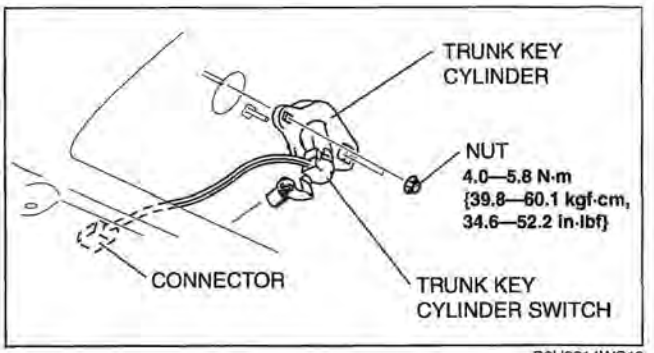

B6U0914WS18

TRUNK KEY CYLINDER SWITCH INSPECTION [SPORT SEDAN]

E6U091467002W07

1. Remove the trunk key cylinder switch.
2. Inspect for continuity between the trunk key cylinder switch terminals using an ohmmeter.
   - If not as specified, replace the trunk key cylinder switch.

O—O : Continuity

Operation	Terminal	
	A	B
On	O	O
Off		

B6U0914WS12

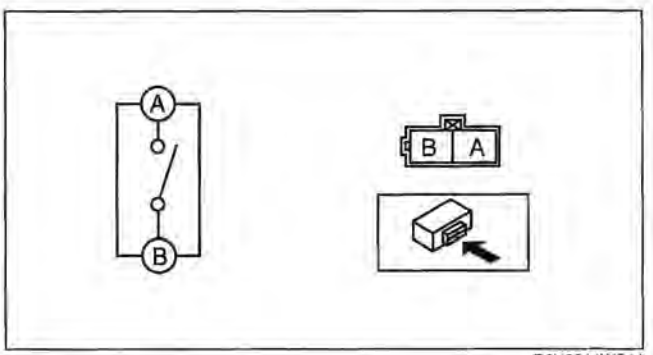

B6U0914WS11

HOOD SWITCH INSPECTION

E6U091456100W01

Note
- Hood switch has a built-in hood lock.

1. Open the hood.
2. Disconnect the negative battery cable.
3. Remove the radiator grille.
4. Disconnect the hood switch connector.
5. Inspect for continuity between the hood switch terminals A and B using an ohmmeter.
   - If there is no continuity, replace the hood switch.

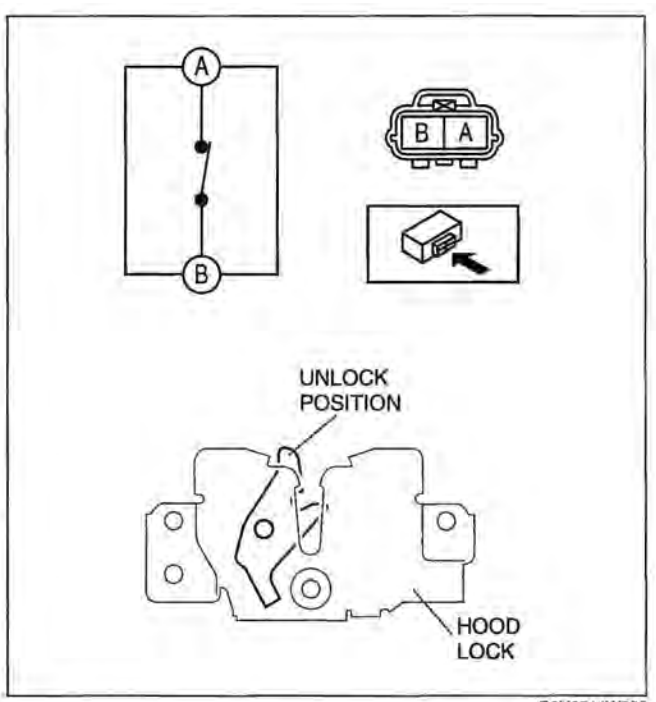

B6U0914W300

6. Lock the hood lock using a flathead screwdriver or equivalent as shown.
7. Inspect for continuity between the hood switch terminals A and B using an ohmmeter.
   - If there is continuity, replace the hood switch.

Caution
- **After the inspection, unlock the hood lock. If closing the hood with the hood lock locked, the hood lock and/or hood striker may be broken.**

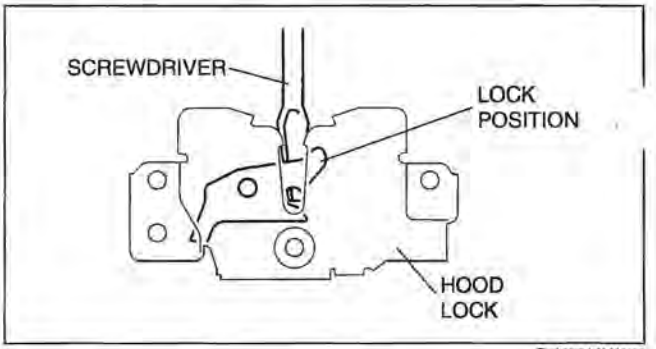

B6U0914W301

COIL REMOVAL/INSTALLATION

E6U091467004W01

Note
- Do not remove the coil unless you are replacing it.
- When only the coil is replaced, the immobilizer system reprogram procedure is not necessary.

1. Disconnect the negative battery cable.
2. Remove the column cover.
3. Remove in the order indicated in the table.

1	Connector
2	Coil (See 09–14–28 Coil Installation Note)

4. Install in the reverse order of removal.

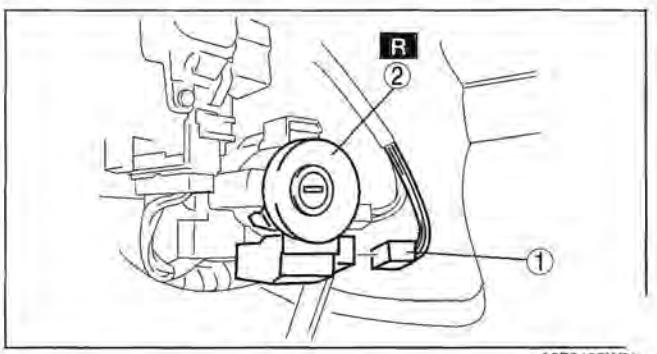

A6E8122W001

Coil Installation Note
1. Install the hole of coil to the tab of steering lock.
2. Install the hook of coil to the steering lock.

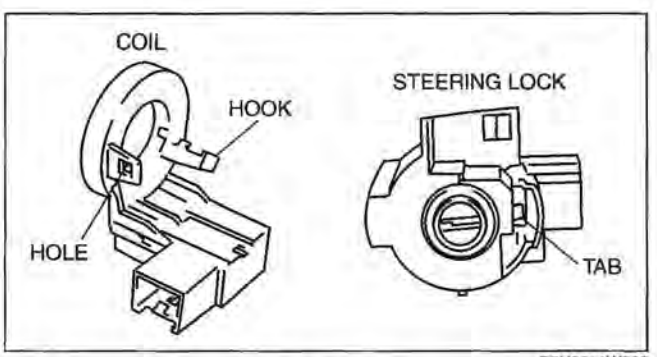

B6U0914W302

IMMOBILIZER SYSTEM COMPONENT REPLACEMENT/KEY ADDITION AND CLEARING [WITH ADVANCED KEYLESS SYSTEM]

E6U091467000W06

Foreword
- When performing the following procedures, the immobilizer resetting procedure using the WDS or equivalent must also always be performed: "Keyless control module replacement", "PCM replacement", "Steering lock unit replacement", "Keyless control module and PCM joint replacement", "Keyless control module, PCM, and steering lock unit joint replacement", and "Key ID number clearing". The engine will not start unless all work is performed using the WDS or equivalent.
- A card key that can start the engine is necessary for the key programming. If there is no card key that can start the engine, perform the key programming after the card key programming. (See 09–14–15 CARD KEY ID CODE REGISTRATION [WITH ADVANCED KEYLESS SYSTEM].)
- There are two ways to add supplemental key: Using the WDS or equivalent or using two keys that can start the engine to program.
- When replacing any of the immobilizer system component parts, adding/clearing keys, or performing other functions, refer to the following table and perform the applicable procedure (No.1 to 5).
- Verify that the room fuse is equipped.

Ref. No.	Condition	Items necessary for procedure (prepare before starting procedure)	Cautionary notes
1	Since two or more keys that can start the engine are necessary, make a spare key. Or program an additional key.	• Programming key	• The WDS or equivalent is necessary for the additional key programming if "Customer spare key programming disable" is performed before the procedure using the WDS or equivalent. In this case, perform No. 2.
2	If there is only one key that can start the engine, make a spare key. If there is no key, program an additional key.	• Programmed card key • Programming key • WDS or equivalent	-
3	Clearing the programmed key ID number.	• Programming keys (two or more) • WDS or equivalent	• The key ID number programmed to the vehicle will be completely cleared. • The engine cannot be started unless the key is reprogrammed after the procedure. Before beginning the procedure, verify that the customer has turned in all of the keys for the vehicle. • The engine cannot be started unless two or more keys are reprogrammed after the procedure. • The two or more keys prepared before the procedure do not have to be new ones and there is no problem with using the key that was used to start the engine before the procedure.
3	Replacing all the keys. (Steering lock unit is not replaced)	• Programmed card key • Programming keys (two or more) • WDS or equivalent	• The keys (two or more) prepared before the procedure do not have to be new ones, and there is no problem with using the key that was used to start the engine before the procedure. • The engine cannot be started unless the key is reprogrammed after the procedure.
3	Replacing the PCM only.	• New PCM • Programmed card key • Programming keys (two or more) • WDS or equivalent	-
4	Changing the additional key programming procedure. (Method for programming other keys using two keys that can start the engine is disabled.)	• WDS or equivalent	• The additional key programming using No. 1 cannot be performed after the procedure. It is possible to restore the setting. For restoring the setting, the WDS or equivalent is necessary.
4	Changing the additional key programming procedure. Allows programming using two keys that can start the engine.	• WDS or equivalent	• New vehicles have this setting.
5	Replacing the steering lock unit only.	• New steering lock unit • Programmed card key • New keys (two or more) • WDS or equivalent	• Have two or more keys ready for programming before beginning the procedure, since the previous keys will be invalid. • The steering lock unit programming is necessary for the keyless control module before the key programming. • Two or more keys need to be programmed after the procedure to start the engine.
5	Replacing the PCM and steering lock unit at the same time.	• New PCM • New steering lock unit • Programmed card key • New keys (two or more) • WDS or equivalent	• Have two or more keys ready for programming before beginning the procedure, since the previous keys will be invalid. • Perform the steering lock unit programming. • Two or more keys need to be programmed after the procedure to start the engine.

Ref. No.	Condition	Items necessary for procedure (prepare before starting procedure)	Cautionary notes
5	Replacing the keyless control module only.	• New keyless control module • Programming card key • Programming keys (two or more) • WDS or equivalent	• Unless keys are reprogrammed after the procedure, the engine cannot be started. Before beginning the procedure, verify that the customer has turned in all of the card keys and keys for the vehicle. • Perform the card key programming. • Perform the steering lock unit programming. • Unless card keys and keys (two or more) are programmed after the procedure, the engine cannot be started. • The card key and keys (two or more) prepared before the procedure do not have to be new ones and there is no problem with using the keys that were used to start the engine before the procedure.
5	Replacing the keyless control module and steering lock unit at the same time.	• New keyless control module • New steering lock unit • Programming card key • New keys (two or more) • WDS or equivalent	• Unless keys are re-programmed after the procedure, the engine cannot be started. Before beginning the procedure, verify that the customer has turned in all of the card keys and keys for the vehicle. • Perform the card key programming. • Perform the steering lock unit programming. • The engine cannot be started unless a card key and keys (two or more) are programmed. • The card key and keys (two or more) prepared before the procedure do not have to be new ones and there is no problem with using the keys that were used to start the engine before the procedure.
5	Replacing the PCM and keyless control module at the same time.	• New PCM • New keyless control module • Programming card key • Programming keys (two or more) • WDS or equivalent	• Unless keys are reprogrammed after the procedure, the engine cannot be started. Befor beginning the procedure, verify that the customer has turned in all of the card keys and keys for the vehicle. • Perform the card key programming. • Perform the steering lock unit programming. • The engine cannot be started unless a card key and two or more keys are programmed after the procedure. • The card key and keys (two or more) prepared before the procedure do not have to be new ones and there is no problem with using the keys that were used to start the engine before the procedure.
5	Replacing the PCM, keyless control module, and steering lock unit at the same time.	• New PCM • New keyless control module • New steering lock unit • Programming card key • Programming keys (two or more) • WDS or equivalent	• Unless keys are reprogrammed after the procedure, the engine cannot be started. Before beginning the procedure, verify that the customer has turned in all of the card keys and keys for the vehicle. • Perform the card key programming. • Perform the steering lock unit programming. • The engine cannot be started unless a card key and two or more keys are programmed after the procedure. • The card key and keys (two or more) prepared before the procedure do not have to be new ones and there is no problem with using the keys that were used to start the engine before the procedure.
-	Replacing the coil antenna.	• New coil antenna	• Immobilizer system resetting is not necessary.

Caution

- **The following conditions may cause poor signal communication between the key and vehicle, resulting in the engine not starting or a key registration error. Do not perform any work under the following conditions:**
  - **— Placing the following items close to the key grip or contacting it.**
    - **Spare keys**
    - **Keys for other vehicles equipped with an immobilizer system**
    - **Any metallic object**
    - **Any electronic device, or any credit or other card with magnetic strips**
- **Do not place the following devices in the vehicle while programming, otherwise programming cannot be performed:**
  - **— WDS or equivalent**
  - **— Personal computer**
  - **— Devices that can send/receive the radio waves**

Note

- The "valid key" used in this manual indicates the key that can start the engine.
- If the key adding, programming, clearing, and immobilizer system construction parts replacement are performed, verify that the all keys can start the engine within **5 s** after the procedure.
- When verifying that the engine starts, wait at least **5 s or more** before starting the engine using the next key.
- If the engine cannot be started using a programmed key, repeat the procedure from the beginning.
- Do not start the engine unless indicated in the procedure. If the engine is started during the programming procedure, programming is stopped at that point. Repeat the procedure starting from the beginning if the engine is started before completion.
- Do not place the card key in the vehicle or bring it **within approx. 1 m** of the vehicle unless indicated in the procedure.
- Two or more key ID numbers must be programmed for the engine to start.
- A maximum of eight key ID numbers can be programmed for one vehicle. The WDS or equivalent can be used to verify the number of key ID numbers programmed to a single vehicle.
- Do not select a WDS or equivalent screen menu other than one indicated in the procedure.

)S or Equivalent Connecting Procedure

Caution

- **Do not place the WDS or equivalent in the vehicle while programming, otherwise programming cannot be performed.**

1. Fully lower the door glass.
2. Connect the WDS or equivalent to the DLC-2.
3. Pull out the WDS or equivalent cable from the door glass opening and set the WDS or equivalent outside the vehicle.

Caution

- **Protect the cable and body contact area with a clean rag, otherwise they could be damaged.**

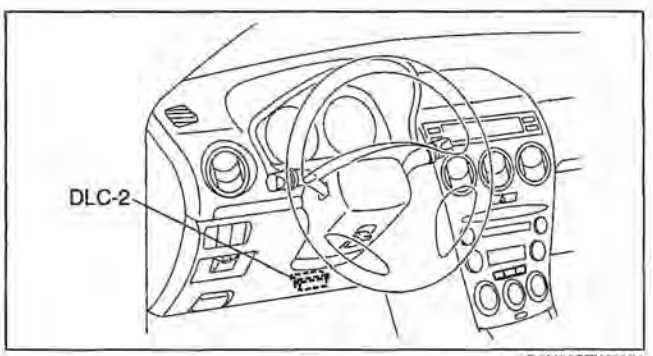

D6U802ZW7001

No.1 Additional Key Programming Procedure (Using Two Valid Keys)

Caution

- **Do not place the following devices in the vehicle while programming, otherwise programming cannot be performed:**
  - **— Card key**
  - **— WDS or equivalent**
  - **— Personal computer**
  - **— Devices that can send/receive the radio waves**

Condition

- Have two or more valid keys.

Note

- A maximum of eight keys can be programmed for one vehicle. If key programming is not successful and DTC 15 appears even though the procedure was performed properly, use the PID/data monitor function of the WDS or equivalent and verify the number of keys that have been programmed.
- If eight keys have already been programmed, and it is necessary to program other keys, the previously programmed key ID numbers must first be cleared. To clear the key, refer to "09–14–34 No.3 PCM, and Key Replacement Procedure (Clearing Previously Programmed Key ID Numbers, Key Re-program)".

Procedure

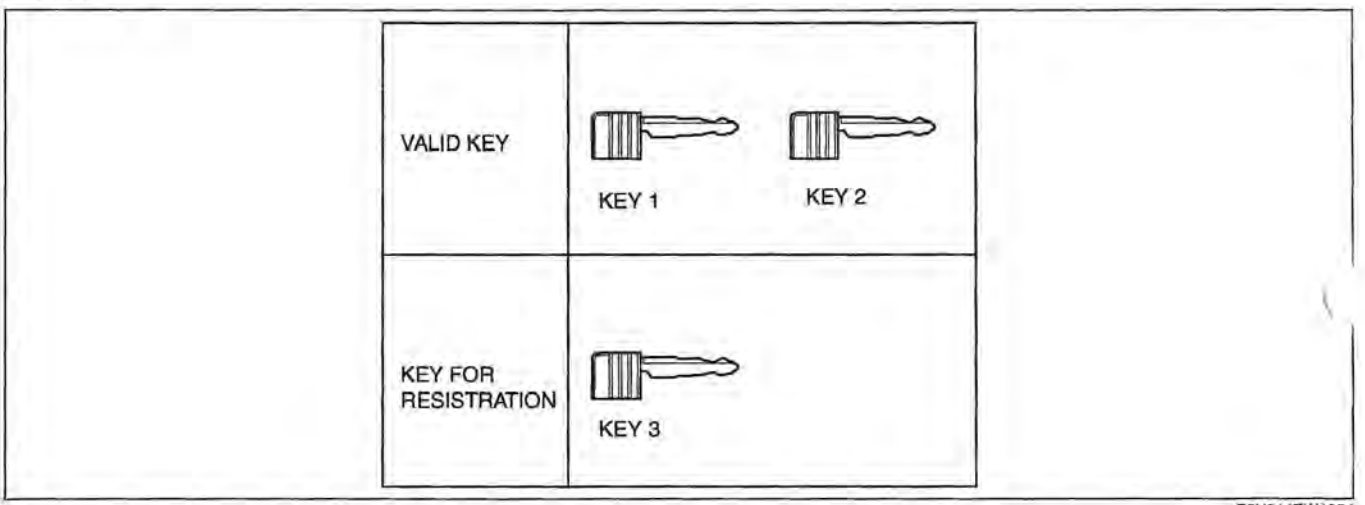

E6U914ZW1024

1. Prepare key 3 for programming.
2. Start the engine using key 1.
3. Verify that the security light illuminates for **approx. 3 s**, and then goes out.
4. Turn the ignition switch to the LOCK position.
5. Using key 1, turn the ignition switch to the ON position.
6. Verify that the security light illuminates for **approx. 3 s**, and then goes out.
7. Using key 1, turn the ignition switch to the LOCK position **within approx. 4 s** after the security light goes out.
8. Remove key 1.
9. Repeat Steps 2—5 using key 2 instead of key 1.
10. Repeat Steps 5—8 using key 3 instead of key 1.
11. If additional keys need to be programmed, repeat Steps 1—10, and replace key 3 in Step 10 with the key to be programmed (key 4).

No. 2 Key Additional Programming Procedure (Using the WDS or Equivalent)
Condition

- There is only one valid key. Or, there is no valid key but there is a card key that can start the engine.

Note

- A maximum of eight keys can be programmed for one vehicle. If key registration is not successful and DTC 15 appears even though the procedure was performed properly, use the PID/data monitor function of the WDS or equivalent and verify the number of keys that have been programmed.
- If eight keys have already been programmed, and it is necessary to program other keys, the previously programmed key ID numbers must first be cleared. To clear the key ID number, refer to "09–14–34 No.3 PCM, and Key Replacement Procedure (Clearing Previously Programmed Key ID Numbers, Key Re-program)".

Procedure

1. Prepare key 1 for programming.
2. Start the engine using a valid key or card key.

Caution

- **Do not place the card key in the vehicle when starting the engine with the valid key, otherwise programming cannot be performed. If the engine is started with the card key, remove the card key from the vehicle after the engine is started.**

3. Verify that the security light illuminates for **approx. 3 s**, and then goes out.
4. Turn the ignition switch to the LOCK position.
5. Connect the WDS or equivalent to the DLC-2. (See 09–14–31 WDS or Equivalent Connecting Procedure.)
6. Using key 1, turn the ignition switch to the ON position.

Note

- Although the security light flashes and DTC 15 is displayed, this does not indicate an improper procedure. Continue to perform the procedure as indicated.

Select "BODY/SECURITY/PATS (immobilizer) function" from the WDS or equivalent screen menu.
Select "Ignition key additional programming" from the WDS or equivalent screen menu.

Note

- After selecting the above menu, "operation is successful" is displayed. At this point, the key that turned the ignition switch to the ON position is completely programmed.

- In this procedure, the necessary number of the keys are completely programmed. To finish the additional key programming, go to Step 13.
- If additional keys need to be programmed, go to the next step.

9. Perform the security access according to the directions on the WDS or equivalent screen. (See 09–14–39 SECURITY ACCESS PROCEDURE.)
10. After verifying that the PATS function menu is displayed again on the WDS or equivalent screen, turn the ignition switch to the LOCK position and remove key 1.
11. Using the key to be programmed, turn the ignition switch to the ON position.
12. Return to the Step 6.
13. After verifying that the PATS function menu is displayed again on the WDS or equivalent screen, select the "Finish (this menu)" to finish the WDS or equivalent procedure.
14. After Step 10, wait **5 s or more**, and then turn the ignition switch to the LOCK position.

No.3 PCM, and Key Replacement Procedure (Clearing Previously Programmed Key ID Numbers, Key Reprogram)

Condition

- Have two or more keys to be programmed after the key ID number clearing.

Caution

- **Before starting Step 1, complete the procedure for PCM replacement.**

Procedure

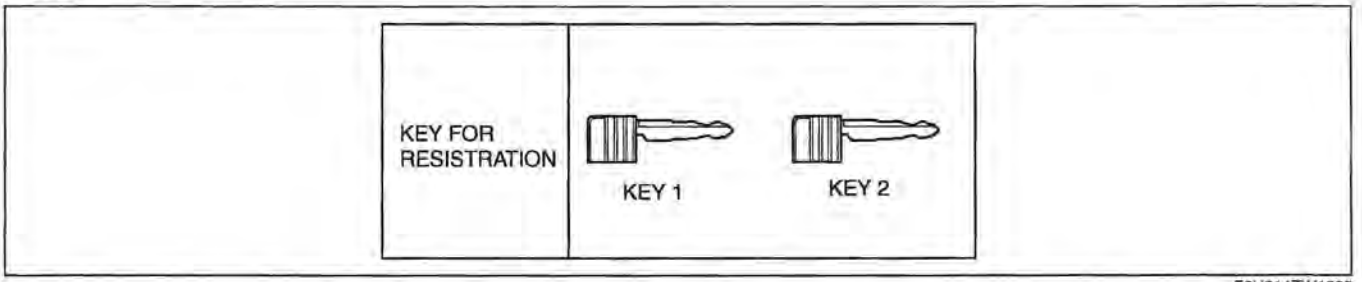

E6U914ZW1025

1. Prepare two or more keys to be programmed after the key ID number clearing.
2. Connect the WDS or equivalent to the DLC-2. (See 09–14–31 WDS or Equivalent Connecting Procedure.)
3. Using key 1, turn the ignition switch to the ON position.

Note

- Although the security light flashes and DTC 15 or 21 is displayed, this does not indicate an improper procedure. Continue to perform the procedure as indicated.

4. Verify that the keyless warning light illuminates for **approx. 3 s**, and then goes out.
5. Select "BODY/SECURITY/PATS (immobilizer) function" from the menu.
6. Select "Ignition key ID number Clearing" from the WDS or equivalent screen menu and perform the procedure according to the WDS or equivalent screen.
7. Perform the security access according to the direction of the WDS or equivalent screen. (See 09–14–39 SECURITY ACCESS PROCEDURE.)
8. After verifying that the PATS function menu is displayed again on the WDS or equivalent screen, select "Finish (this menu)" to finish the WDS or equivalent procedure.
9. After Step 9, wait **5 s or more**, and then turn the ignition switch to the LOCK position.
10. Using key 1, turn the ignition switch to the ON position.
11. After verifying that the security light and keyless warning light illuminates **for 3 s or more** turn the ignition switch to the LOCK position and remove key 1.

Note

- Although the security light flashes and DTC 21 is displayed, this does not indicate an improper procedure. Continue to perform the procedure as indicated.

12. Using key 2, turn the ignition switch to the ON position.
13. Verify that the security light and keyless warning light illuminates **for approx. 3 s**, and then goes out.
14. After verifying that the security light goes out, turn the ignition switch to the LOCK position using key 2, and then remove key 2.
15. If an additional key needs to be programmed, repeat Steps 13—15 with the additional key being key 3. If the ignition switch is held in the ON position **for 1 min or more**, the additional key programming procedure according to Steps 13—15 will not be possible. If this occurs, refer to "09–14–32 No.1 Additional Key Programming Procedure (Using Two Valid Keys)" to register any additional keys.
16. Start the engine with the key 1.

17. Verify that the security light and keyless warning light operate as follows:
    - From the point when the ignition switch is turned to the ON position, the security light illuminates **for approx. 3 s** and goes out.
    - The keyless warning light illuminates with the ignition switch turned to the ON position, and after **approx. 1 s** after the engine is started, it goes out and displays the number of programmed keys.

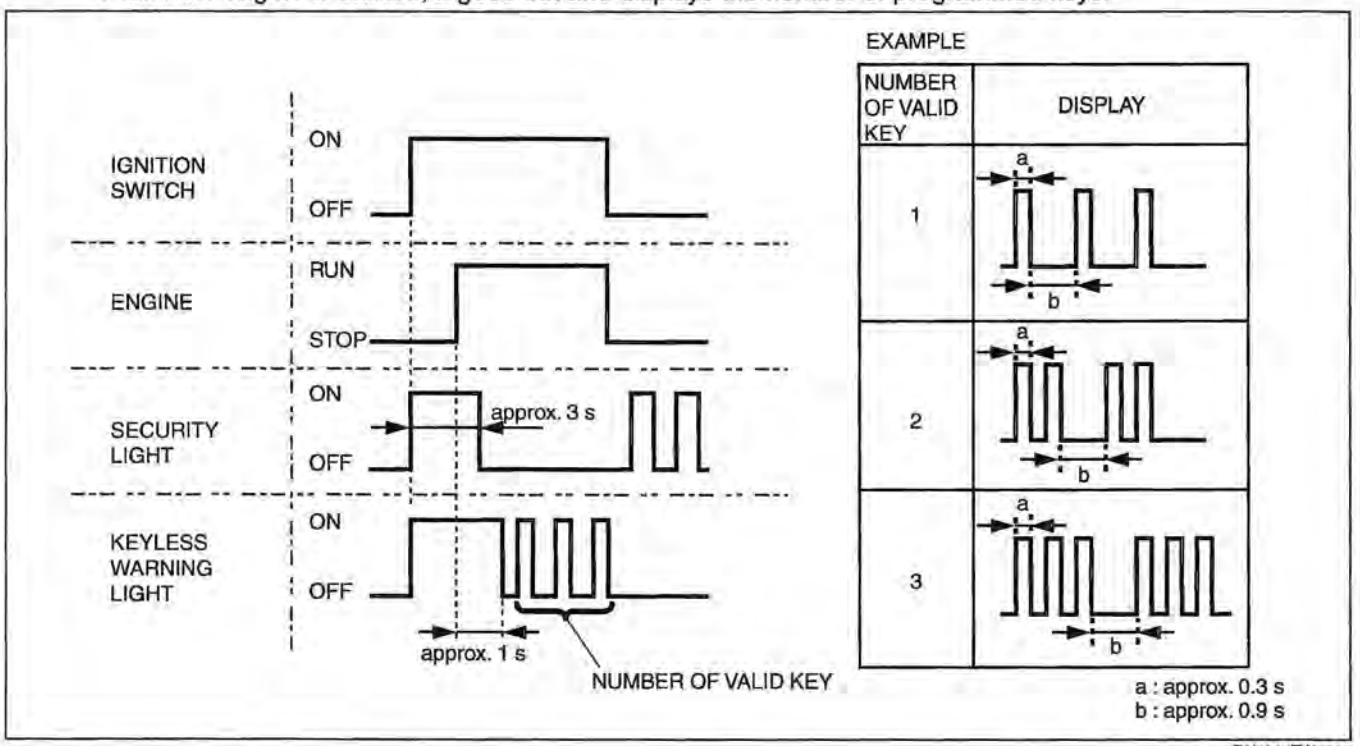

E6U914ZW1026

After verifying that the keyless warning light goes out, turn the ignition switch to the LOCK position using key 1.

18. Repeat Steps 17—19 using key 2 instead of key 1.

Note
- Perform Steps 17—19 as well when there are three or more programmed keys.

20. Start the engine with the card key and remove any key from the key cylinder.

Caution
- **Remove any key from the key cylinder.**

21. Verify that the security light and keyless warning light operate as follows:
    - From the point when the ignition switch is turned to the ON position, the security light illuminates **for approx. 3 s**, and goes out.
    - The keyless warning light illuminates when the ignition switch is turned to the ON position, and after **approx. 1 s** after the engine is started, it goes out.
22. Turn the ignition switch to the LOCK position after verifying that the keyless warning light goes out.

No. 4 Key Additional Programming Procedure Changing

Note
- This procedure is performed for enabling/diabling the "No.1 Additional Key Programming Procedure (Using Two Valid Keys)" setting.
- This procedure is possible when the vehicle is new, and when replacing the keyless unit with a new one.
- If "No.1 Additional Key Programming Procedure (Using Two Valid Keys)" is set to disable, the additional key programming can be only performed using the WDS or equivalent preventing the forging of a spare key by using two keys that can start the engine. This function is for use by rental car agencies or other companies with vehicle fleets.

Procedure
1. Using the key, turn the ignition switch to the ON position. (The key can be either the valid key or an unprogrammed key)

Note
- Although the security light flashes and DTC 15 is displayed when an unprogrammed key is used, this does not indicate an improper procedure. Continue to perform the procedure as indicated.

2. Connect the WDS or equivalent to the DLC-2.
3. Select "BODY/SECURITY/PATS (immobilizer) function" from the WDS or equivalent screen menu.
4. Select "Customer spare key programming enable" or "Customer spare key programming disable" from the WDS or equivalent screen menu. The key additional programming procedure is as follows according to the selected menu:

Setting	Additional key programming procedure	
	Method using two valid keys	Method using the WDS or equivalent
Customer spare key programming enable	–	–
Customer spare key programming disable	×	–

– : Available

× : Unavailable

5. Perform the security access according to the directions on the WDS or equivalent screen. (See 09–14–39 SECURITY ACCESS PROCEDURE.)
6. After verifying that the PATS function menu is displayed again on the WDS or equivalent screen, select "Finish (this menu)" to finish the WDS or equivalent procedure.
7. After Step 6, wait **5 s or more** and then turn the ignition switch to the LOCK position.

No.5 Resetting Procedure for the Immobilizer System when Replacing the PCM, Keyless Control Module, or Steering Lock Unit

Condition

When the keyless control module is replaced
- — Have one or more card keys to be programmed after the replacement.
- — Have two or more keys to be programmed after the replacement.

• When the keyless control module is not to be replaced
- — Have one or more card keys to be programmed.
- — Have two or more keys to be programmed after the replacement.

Caution
- **Perform the procedures in the following order: "Key ID number clearing", "Card key programming", "Steering lock unit programming", and "Key programming". If there is a failure in the programming, the engine may not be started.**
- **When replacing only the PCM, start from Step 2. Key 1 in the procedure can be any valid key.**
- **Perform the "card key programming procedure" in Step 9 only when the keyless control module is replaced.**
- **Perform the "steering lock unit programming procedure" in Step 10 only when either the keyless control module or steering lock unit is replaced.**

Procedure

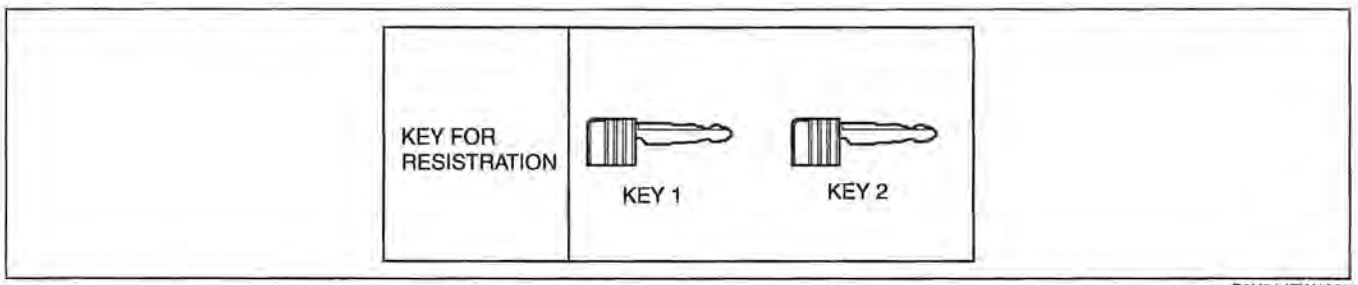

E6U914ZW1025

Prepare two or more keys to be programmed after the key ID number is cleared.
2. Connect the WDS or equivalent to the DLC-2. (See 09–14–31 WDS or Equivalent Connecting Procedure.)
3. Using key 1, turn the ignition switch to the ON position.

Note
- Although the security light flashes and DTC 15 or 21 is displayed, this does not indicate an improper procedure. Continue to perform the procedure as indicated.

4. Verify that the keyless warning light illuminates for **approx. 3 s** and then goes out.
5. Select "BODY/SECURITY/PATS (immobilizer) function" from the WDS or equivalent screen menu.
6. Select "Ignition key ID number clearing" from the WDS or equivalent screen menu and perform the procedure according to the WDS or equivalent screen.
7. Perform the security access according to the directions on the WDS or equivalent screen. (See 09–14–39 SECURITY ACCESS PROCEDURE.)

Caution
- **The WDS or equivalent displays "At least two or more keys must be programmed", however, do not perform the key programming and proceed to Step 8 or 9. If the procedure is not followed, the engine may not be started.**
  The key programming procedure is performed at Step 12—15.

8. Perform the card key programming. (when the keyless control module is replaced) (See 09–14–15 CARD KEY ID CODE REGISTRATION [WITH ADVANCED KEYLESS SYSTEM].)
9. Perform the steering lock unit programming. (when either the keyless control module or steering lock unit is replaced) (See 09–14–17 STEERING LOCK UNIT ID CODE REGISTRATION [WITH ADVANCED KEYLESS SYSTEM].)
10. After verifying that the PATS function menu is displayed again on the WDS or equivalent screen, select "Finish (this menu)" to finish the WDS or equivalent procedure.
11. After Step 11, wait **5 s or more** and then turn the ignition switch to the LOCK position.
12. Using key 1, turn the ignition switch to the ON position.

13. After verifying that the security light and keyless warning light illuminate **for 3 s or more**, turn the ignition switch to the LOCK position and remove key 1.

Note
- Although the security light flashes and DTC 21 is displayed, this does not indicate an improper procedur. Continue to perform the procedure as indicated.

14. Using key 2, turn the ignition switch to the ON position.
15. Verify that the security light and keyless warning light illuminate **for approx. 3 s**, and then goes out.
16. After verifying that the security light goes out, turn the ignition switch to the LOCK position using key 2, and then remove key 2.
17. If additional keys need to be programmed, repeat Steps 15—17 with the additional key to be programmed being key 3. If the ignition switch is held in the ON position **for 1 min or more**, additional key programming according to Steps 15—17 will not be possible. If this occurs, refer to "09–14–32 No.1 Additional Key Programming Procedure (Using Two Valid Keys)" to program any additional keys.
18. Start the engine with key 1.
19. Verify that the security light and keyless warning light operate as follows:
    - From the point when the ignition switch is turned to the ON position, the security light illuminates **for approx. 3 s**, and goes out.
    - The keyless warning light illuminates when the ignition switch is turned to the ON position, and the light goes out after **approx. 1 s**, and then displays the number of the programmed keys.

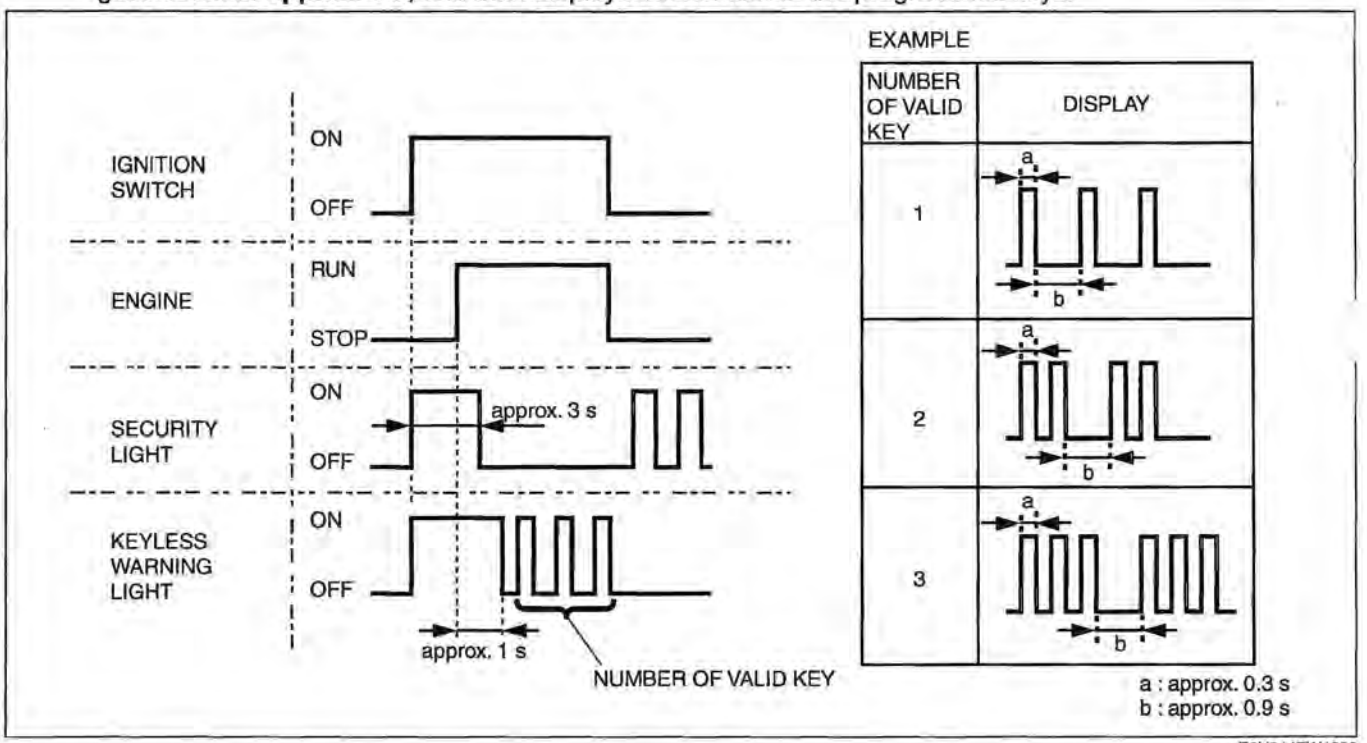

E6U914ZW1026

20. After verifying that the keyless warning light goes out, turn the ignition switch to the LOCK position using key 1, and then remove the key.
21. Repeat Steps 19—21 using key 2 instead of key 1.

Note
- Perform Steps 19—21 as well when three or more keys are to be programmed.

22. Start the engine using the card key.

Caution
- **Remove any key from the key cylinder.**

23. Verify that the security light and keyless warning light operate as follows:
    - From the point that ignition switch is turned to the ON position, the security light illuminates **for approx. 3** and goes out.
    - The keyless warning light illuminate when the ignition switch is turned to the ON position for **approx. 1 min**, and goes out.
24. After verifying that the keyless warning light goes out, turn the ignition switch to the LOCK position.

SECURITY ACCESS PROCEDURE

E6U091467000W07

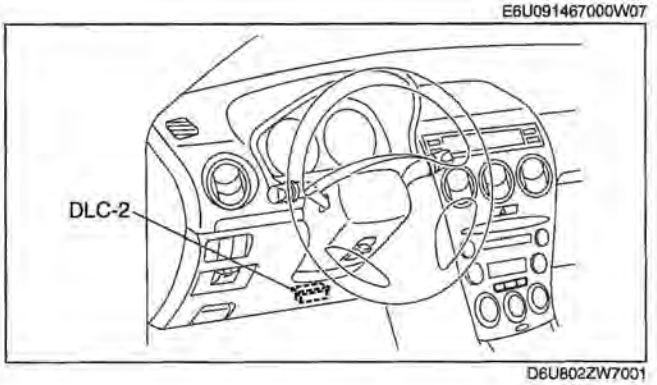

D6U802ZW7001

1. Connect the WDS or equivalent to the DLC-2.
2. Select "BODY/SECURITY/PATS (immobilizer) function" from the WDS or equivalent screen menu.
3. Select the items to be performed from the following:
   - Additional card key programming
   - Card key ID number clearing
   - Steering lock unit programming
   - Ignition key additional programming (with immobilizer system)
   - Ignition key ID number clearing (with immobilizer system)
   - Customer spare key programming enable (with immobilizer system)
   - Customer spare key programming disable (with immobilizer system)
4. The security access begins and the WDS or equivalent displays the "OUT-CODE".

Note
- When "OUT-CODE" is first displayed, turning the ignition switch from the LOCK to the ON position **5 times** will change the "OUT-CODE".

5. Input "IN-CODE" corresponding to "OUT-CODE" displayed on the WDS or equivalent screen.
6. If the security access is successful, selected item can be performed.

IMMOBILIZER SYSTEM REPROGRAM PROCEDURE [WITH KEYLESS ENTRY SYSTEM]

E6U091467000W04

09-14

Caution
- **Do not perform key registration or start the engine under the following conditions. Doing so could result in a key registration error or the engine not starting even with a correctly programmed key.**
  - **— If a large, metal object is close to a valid key**
  - **— If an electrical device is close to a valid key**
  - **— If two or more valid keys are on the same key ring**

Note
- When an error occurs during the reprogram procedures, except when the PCM is replaced, repeat the procedure from Step 1. If you still cannot reprogram, confirm how many keys can start the engine. Then, perform the key replacement or addition reprogram procedure according to the valid key number.
- To make a copy of the key or replace the immobilizer system component parts (the key(s), and/or PCM), the customer should bring all keys to the dealer. This is because the previously programmed key IDs are erased when reprogramming the key IDs into the PCM.
- The immobilizer system cannot be deactivated.
- Confirm that all keys programmed can start the engine after the reprogram procedure. When confirming, wait for **more than 5 seconds** before inserting the next key.
- When the customer does not need to register more than two keys, the following procedures can be stopped after programming two keys.
- If the engine is started during the key registration procedure, the key registration mode will be erased. Therefore, do not start the engine until the key registration procedure for all the necessary keys is finished.
- A maximum of 8 keys can be programmed for one vehicle.
- To start the engine, two or more keys need to be programmed.

Key Addition
When the customer has two or more valid keys

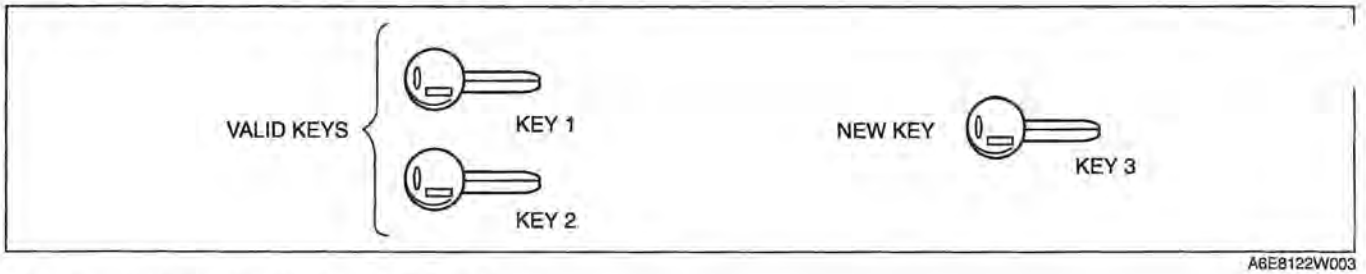

A6E8122W003

1. Cut new transponder-equipped key(s).
2. Using key 1, turn ignition switch to ON position.
   (1) Observe illumination of security light in instrument cluster.
   (2) After the security light turns off (after approx. 3 seconds from when ignition switch is turned to the ON position), turn key 1 to the LOCK position **within approx. 4 seconds** and remove it from the steering lock.
3. Repeat Step 2 with key 2.
4. Repeat Step 2 with key 3.
5. If there are 4—8 keys (new keys), repeat Step 2.
6. Verify that the engine starts using the programmed key.

When the customer has only one or no valid key

- If only one or no valid key is available, use the **SST** (WDS or equivalent) to register additional keys. (See 09–14–40 Key registration using SST (WDS or equivalent))

Key registration using SST (WDS or equivalent)

Note
- Additional keys can be programmed without having to erase the key codes already programmed.
- If 8 keys have already been programmed, this procedure cannot be used to register a key. To register a key under this condition, it is necessary to first erase all the key codes. (See 09–14–41 Key Replacemer

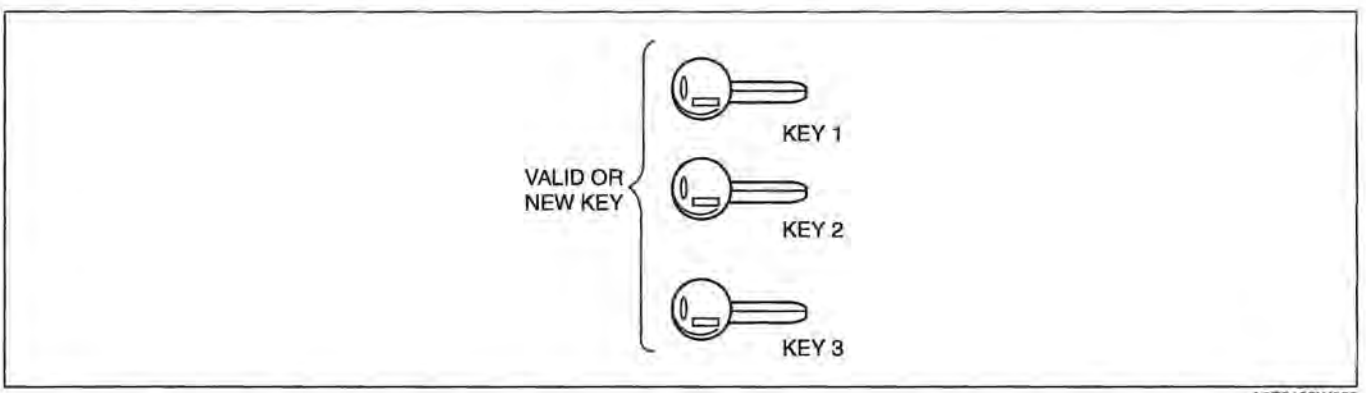

A6E8122W002

1. Cut new transponder equipped key(s) if necessary.
2. Connect the **SST** (WDS or equivalent).
3. Using key 1, turn ignition switch to the ON position.
   - Valid key: The security light illuminates, then turns off after **approx. 3 seconds**.
   - New key: The security light flashes rapidly for **approx. 1 minute** and start displaying the DTC 15 (WDS or equivalent: DTC B1601).
   (1) Perform security access approval. (See 09–14–42 Security Access Procedure.)
   (2) Select "Program additional ignition key".
   (3) Turn key 1 to the LOCK position and remove from the steering lock.
4. Using key 2, turn ignition switch to the ON position.
   (1) Select "Program additional ignition key".
   (2) Turn key 2 to the LOCK position and remove from the steering lock.
5. If there are 3—8 keys (new keys), repeat Step 4.
6. Verify that the engine starts using the programmed key.

Key Replacement

Note
- Perform this procedure to erase a previously programmed key code and register a new key.
- If a new key code is programmed by following this procedure, the engine will not start using the previously programmed keys. The keys need to be re-programmed.

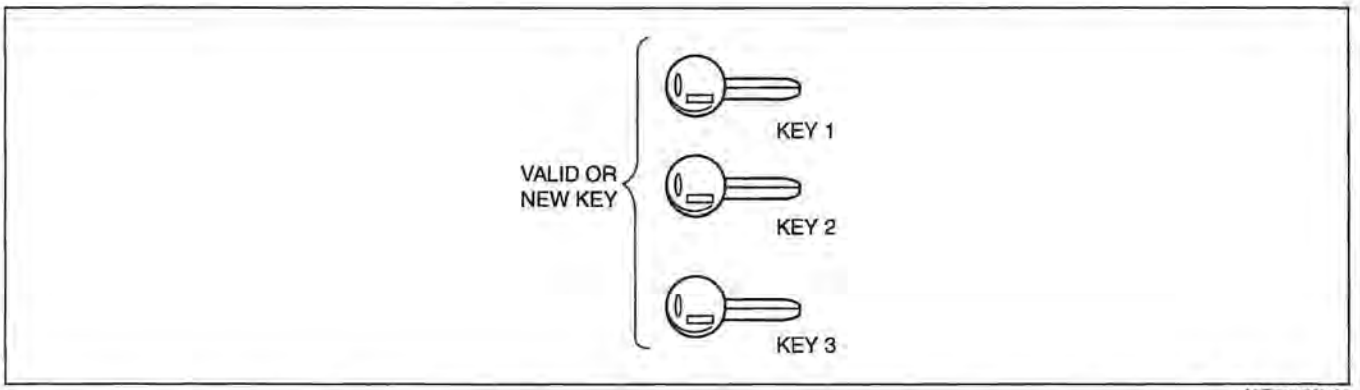

A6E8122W002

1. Cut new transponder equipped key(s) if necessary.
2. Connect the **SST** (WDS or equivalent).
3. Using key 1, turn ignition switch to the ON position.
   - Valid key: The security light illuminates, then turns off after **approx. 3 seconds.**
   - New key: The security light flashes rapidly for **approx. 1 minute** and start displaying the DTC 15 (WDS or equivalent: DTC B1601).
   (1) Perform security access approval. (See 09–14–42 Security Access Procedure.)
   (2) Select "Ignition Key Code Erase".

   Note
   - Do not select any other command from this menu.

   (3) Turn key 1 to the LOCK position for **more than 1 second**.
   (4) Turn key 1 to the ON position for **more than 3 seconds**.

   Note
   - Security light will remain illuminated as long as key is in the ON position.

   (5) Remove key 1 from the steering lock.

   Note
   - After **approx. 1 minute** security light: DTC 21 (WDS or equivalent: DTC B1213) is output

4. Using key 2, turn ignition switch to the ON position for **more than 3 seconds**. Observe that security light illuminates (for **approx. 3 seconds**).
   (1) Verify that the security light is not illuminated, then turn key 2 to the LOCK position and remove from the steering lock.
5. If there are 3—8 keys (valid and/or new keys), repeat Step 4.
6. Verify that the engine starts using the programmed key.

PCM Replacement

- PCM must be replaced by performing "Programmable Module Installation Procedure." (See 01–40A–24 PCM REPLACEMENT [L3])(See 01–40B–20 PCM CONFIGURATION [L3 WITH TC]) (See 01–40C–23 PCM REPLACEMENT [AJ])
- After PCM replacement, and programmable module installation has been performed, refer to the procedure fo "Key Replacement", and perform key programming. (See 09–14–41 Key Replacement.)

Note

- To start the engine, two or more keys need to be programmed.

Customer Spare Key Programming Without Using SST (WDS or equivalent) Set-up

Note

- With this function, enabling and disabling of the "When the customer has two or more valid keys" function can be set using the **SST** (WDS or equivalent). This function is provided to prohibit drivers from performing the reprogram procedure on vehicles owned by rental car companies or other large vehicle fleet owners.

1. Connect the **SST** (WDS or equivalent).
2. Using valid or new key, turn ignition switch to the ON position.
3. Perform security access approval. (See 09–14–42 Security Access Procedure.)
4. Select "Customer Spare Key Programming Enable/Disable".
5. The following chart indicates setting of the customer spare key programming.

X: Applicable
–: Not applicable

Setting	Key registration method	
	Using 2 valid key	Using SST (WDS or equivalent)
Enable (Default)	X	X
Disable	–	X

Note

- At the time of new vehicle delivery, the function is set on "Enable".

Security Access Procedure

Note

- When using the **SST** (WDS or equivalent) to perform "Ignition Key Code Erase" or "Customer Spare Key Programming Enable/Disable", it is necessary to obtain security access approval.

1. Connect the **SST** (WDS or equivalent).
2. Select "Tool box", "Body", "Security", and then "PATS Functions" (in this order).
3. The **SST** (WDS or equivalent) will read out an outcode depending on the designated procedure.

Caution

- **After reading out the outcode, do not turn ignition switch from LOCK to ON position 5 times, otherwise the outcode value will be changed.**

4. Access the Mazda official website to obtain the incode that corresponds to the outcode. Refer to Service Information Ref. No. A001/02 for details of this procedure.
5. Input the incode to the **SST** (WDS or equivalent).
6. Verify that the security access procedure finishes normally.

TRANSMITTER ID CODE REGISTRATION [KEYLESS ENTRY SYSTEM]

E6U091467820W03

Note

- When programming the ID code into a keyless control module, verify that other transmitters are not being operated in the vicinity.

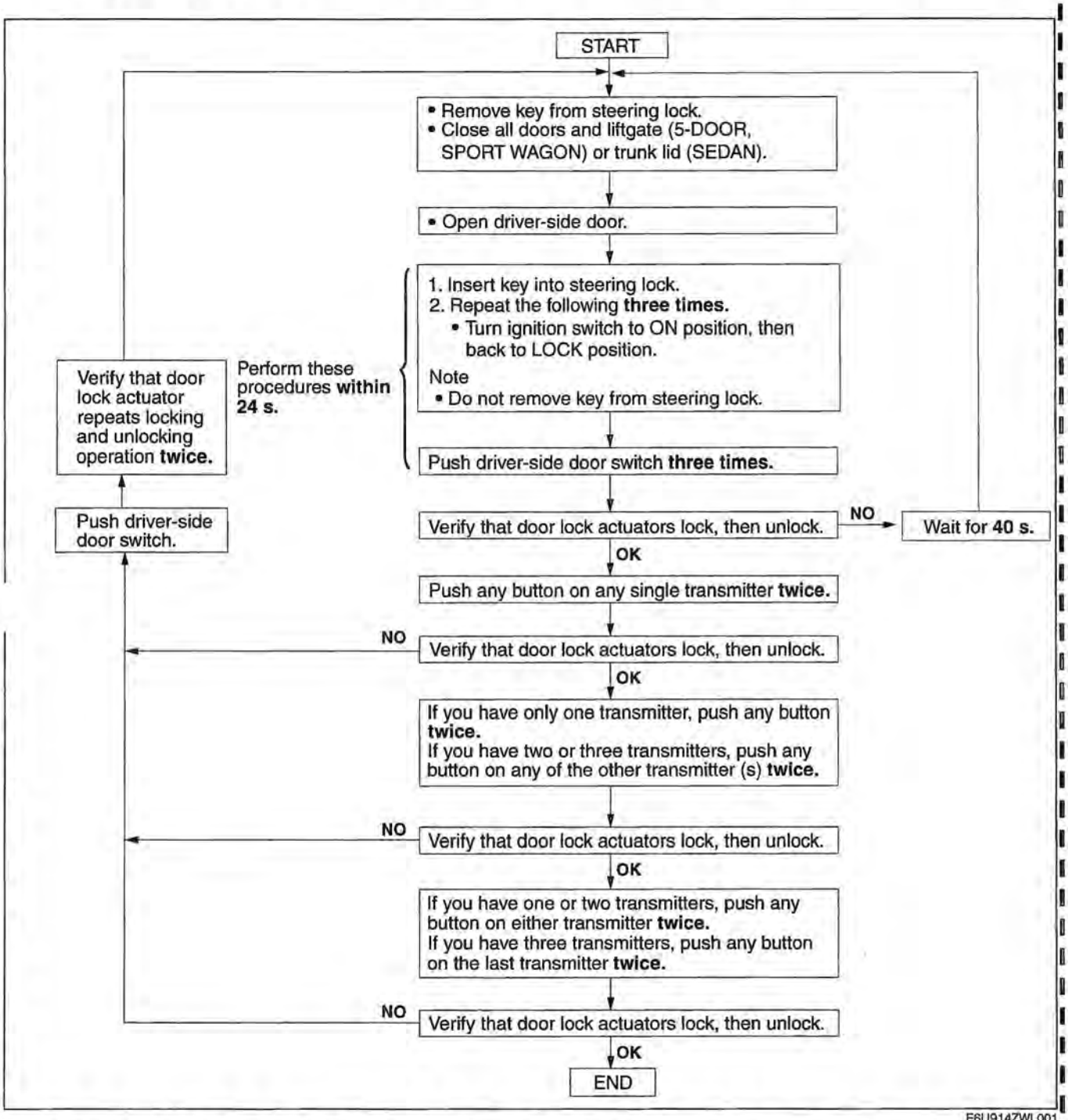

E6U914ZWL001

09–14

09–15 SUNROOF

SUNROOF LOCATION INDEX 09–15–2
DEFLECTOR REMOVAL/INSTALLATION 09–15–3
GLASS PANEL REMOVAL/INSTALLATION 09–15–4
GLASS PANEL ADJUSTMENT 09–15–4
FRONT DRAIN HOSE REMOVAL 09–15–5
FRONT DRAIN HOSE INSTALLATION 09–15–5
REAR DRAIN HOSE REMOVAL [SPORT SEDAN, 5-DOOR] 09–15–6
REAR DRAIN HOSE REMOVAL [SPORT WAGON] 09–15–7
REAR DRAIN HOSE INSTALLATION 09–15–8
SUNROOF UNIT REMOVAL/INSTALLATION 09–15–8
SUNROOF UNIT DISASSEMBLY/ASSEMBLY 09–15–9
Slider Disassembly Note 09–15–10
Guide Disassembly Note 09–15–10
Decoration Link Assembly Note 09–15–10
Guide Assembly Note 09–15–10
SUNROOF MOTOR REMOVAL 09–15–11
SUNROOF MOTOR INSTALLATION 09–15–11
SUNROOF MOTOR INSPECTION 09–15–12
Motor 09–15–12
Limit Switch 09–15–12
SUNROOF RELAY INSPECTION 09–15–13
Terminal voltage list (Reference) 09–15–13
SUNROOF SWITCH REMOVAL/INSTALLATION 09–15–14
SUNROOF SWITCH INSPECTION 09–15–14

SUNROOF LOCATION INDEX

E6U091500000W01

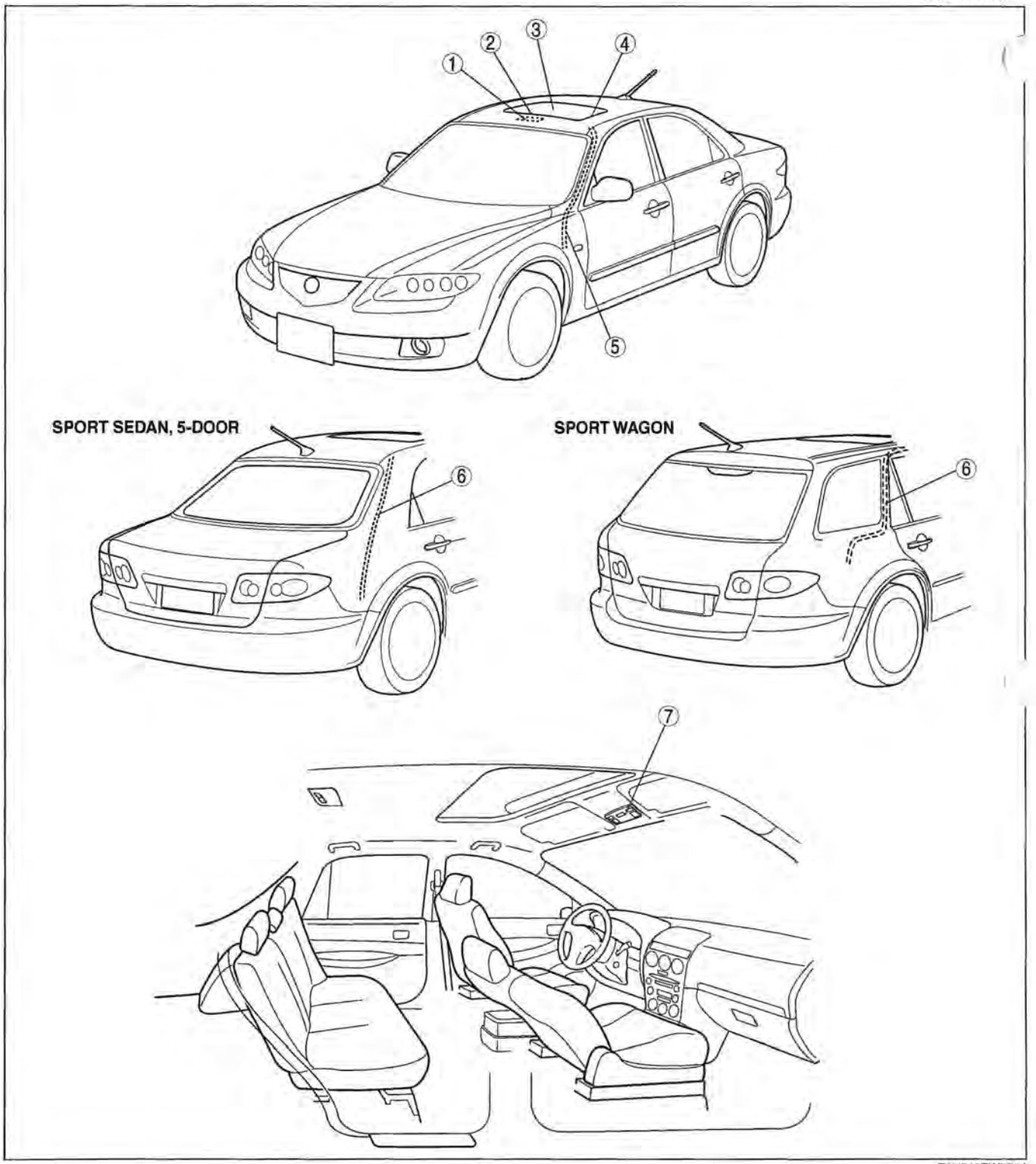

E6U915ZW5001

1	Sunroof motor and relay (See 09–15–11 SUNROOF MOTOR REMOVAL) (See 09–15–11 SUNROOF MOTOR INSTALLATION) (See 09–15–12 SUNROOF MOTOR INSPECTION) (See 09–15–13 SUNROOF RELAY INSPECTION)
2	Deflector (See 09–15–3 DEFLECTOR REMOVAL/ INSTALLATION)

3	Glass panel (See 09–15–4 GLASS PANEL REMOVAL/ INSTALLATION) (See 09–15–4 GLASS PANEL ADJUSTMENT)
4	Sunroof unit (See 09–15–8 SUNROOF UNIT REMOVAL/ INSTALLATION) (See 09–15–9 SUNROOF UNIT DISASSEMBLY/ ASSEMBLY)

5	Front drain hose (See 09–15–5 FRONT DRAIN HOSE REMOVAL) (See 09–15–5 FRONT DRAIN HOSE INSTALLATION)
6	Rear drain hose (See 09–15–6 REAR DRAIN HOSE REMOVAL [SPORT SEDAN, 5-DOOR]) (See 09–15–7 REAR DRAIN HOSE REMOVAL [SPORT WAGON]) (See 09–15–8 REAR DRAIN HOSE INSTALLATION)

7	Sunroof switch (See 09–15–14 SUNROOF SWITCH REMOVAL/INSTALLATION) (See 09–15–14 SUNROOF SWITCH INSPECTION)

DEFLECTOR REMOVAL/INSTALLATION

E6U091569850W01

1. Fully open the glass panel.
2. Disconnect the negative battery cable.
3. Partially peel back the seaming welt.
4. Remove the following parts:
   (1) Microphone (vehicles with car-navigation system)(See 09–20–14 MICROPHONE REMOVAL/INSTALLATION.)
   (2) Sunroof seaming welt (vehicles with sunroof only)
   (3) A-pillar trims (See 09–17–10 A-PILLAR TRIM REMOVAL/INSTALLATION.)
   (4) Upper anchor of the front seat belt (See 08–11–3 FRONT SEAT BELT REMOVAL/INSTALLATION.)
   (5) Front scuff plate (See 09–17–11 FRONT SCUFF PLATE REMOVAL/INSTALLATION.)
   (6) Rear scuff plate (See 09–17–12 REAR SCUFF PLATE REMOVAL/INSTALLATION.)
   (7) B-pillar lower trims (See 09–17–10 B-PILLAR LOWER TRIM REMOVAL/INSTALLATION.)
   (8) B-pillar upper trims (See 09–17–11 B-PILLAR UPPER TRIM REMOVAL/INSTALLATION.)
   (9) C-pillar trims (See 09–17–14 C-PILLAR TRIM REMOVAL/INSTALLATION.)
   (10) D-pillar trims (Sport Wagon) (See 09–17–15 D-PILLAR TRIM REMOVAL/INSTALLATION [SPORT WAGON].)
   (11) Front and rear map lights (See 09–18–27 FRONT MAP LIGHT REMOVAL/INSTALLATION.) (See 09–18–28 REAR MAP LIGHT REMOVAL/INSTALLATION.)
   (12) Cargo compartment light (See 09–18–29 CARGO COMPARTMENT LIGHT REMOVAL/INSTALLATION [5-DOOR, SPORT WAGON].)
5. Disconnect the auto-dimming mirror connector. (vehicles with auto-dimming mirror only)
6. Remove the sunvisors. (See 09–17–25 SUNVISOR REMOVAL/INSTALLATION.)
7. Remove the assist handle. (See 09–17–26 ASSIST HANDLE REMOVAL/INSTALLATION.)
8. Remove the (See 09–17–2 HEADLINER REMOVAL/INSTALLATION.)
9. Remove the screws.
10. Disengage the hooks.
    (1) Press the rear end of each hook.
    (2) After sliding the hooks rearward, press them upward.
11. Remove the deflector.
12. Install in the reverse order of removal.

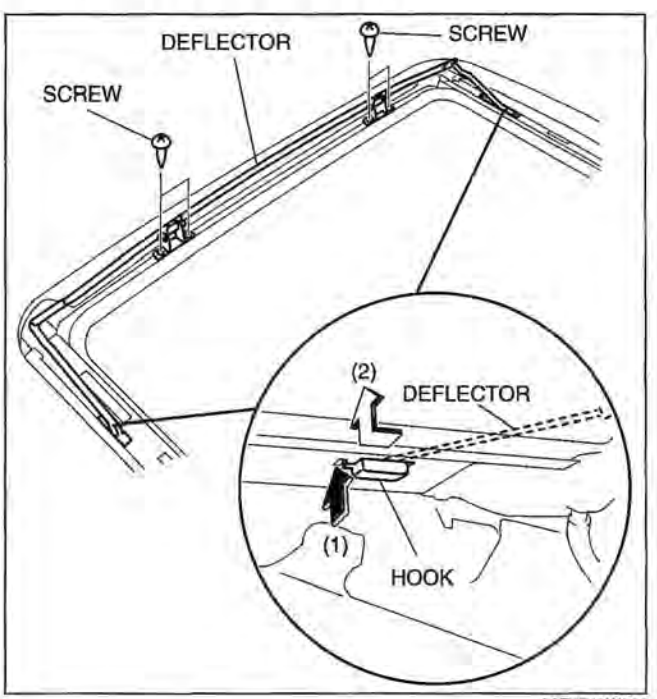

A6E7740W003

09–15

GLASS PANEL REMOVAL/INSTALLATION

E6U091569850W02

1. Fully close the glass panel.
2. Fully open the sunshade.
3. Remove the screws, and then remove the glass panel.

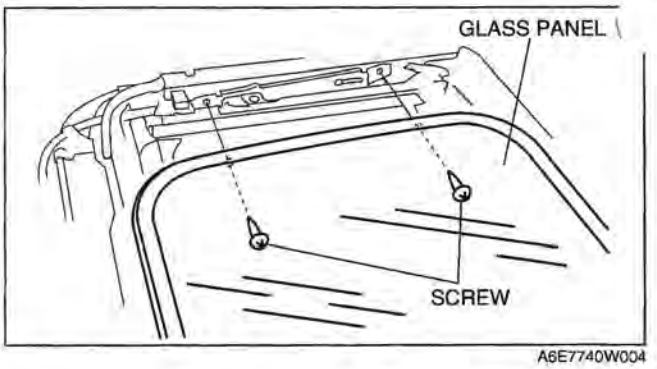

A6E7740W004

4. Peel the weatherstrip off the glass panel.
5. Install in the reverse order of removal.
6. Adjust the glass panel. (See 09–15–4 GLASS PANEL ADJUSTMENT.)

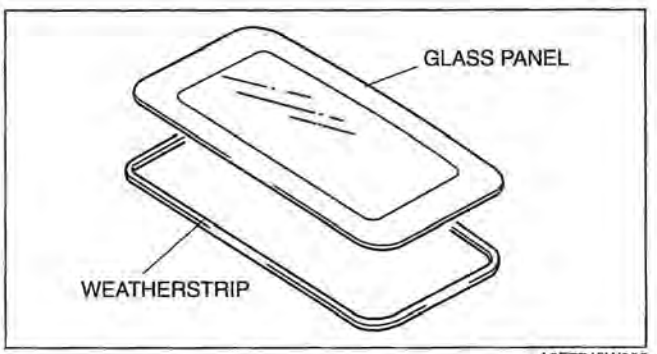

A6E7740W006

GLASS PANEL ADJUSTMENT

E6U091569850W03

1. Fully close the glass panel.
2. Measure the gap and height between the glass panel and body.
3. If not as specified, loosen the glass panel installation screws and reposition the glass panel.

Clearance
a: 2.0—2.2 mm {0.079—0.086 in}
b: 0 mm {0 in}

4. Tighten the installation screws.

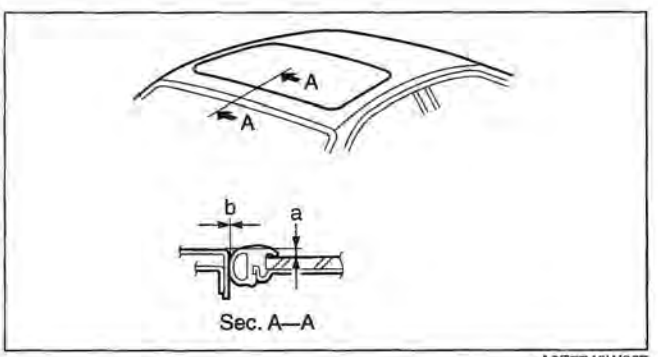

A6E7740W007

5. Insert a credit card between the weatherstrip and the body of the vehicle. Verify that the sunroof is shut tightly (there is resistance when the credit card is moved).
   - If the sunroof is not shut tightly, readjust by performing Steps 3 and 4.

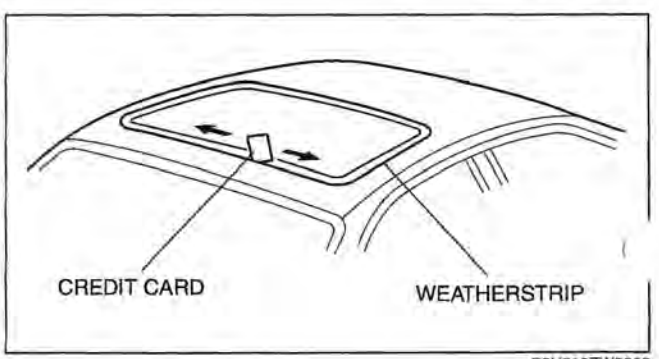

E6U915ZW5002

FRONT DRAIN HOSE REMOVAL

E6U091569920W01

1. Disconnect the negative battery cable.
2. Partially peel back the seaming welt.
   Remove the following parts:
   (1) Microphone (vehicles with car-navigation system)(See 09–20–14 MICROPHONE REMOVAL/INSTALLATION.)
   (2) Sunroof seaming welt (vehicles with sunroof only)
   (3) A-pillar trims (See 09–17–10 A-PILLAR TRIM REMOVAL/INSTALLATION.)
   (4) Upper anchor of the front seat belt (See 08–11–3 FRONT SEAT BELT REMOVAL/INSTALLATION.)
   (5) Front scuff plate (See 09–17–11 FRONT SCUFF PLATE REMOVAL/INSTALLATION.)
   (6) Rear scuff plate (See 09–17–12 REAR SCUFF PLATE REMOVAL/INSTALLATION.)
   (7) B-pillar lower trims (See 09–17–10 B-PILLAR LOWER TRIM REMOVAL/INSTALLATION.)
   (8) B-pillar upper trims (See 09–17–11 B-PILLAR UPPER TRIM REMOVAL/INSTALLATION.)
   (9) C-pillar trims (See 09–17–14 C-PILLAR TRIM REMOVAL/INSTALLATION.)
   (10) D-pillar trims (Sport Wagon) (See 09–17–15 D-PILLAR TRIM REMOVAL/INSTALLATION [SPORT WAGON].)
   (11) Front and rear map lights (See 09–18–27 FRONT MAP LIGHT REMOVAL/INSTALLATION.) (See 09–18–28 REAR MAP LIGHT REMOVAL/INSTALLATION.)
   (12) Cargo compartment light (See 09–18–29 CARGO COMPARTMENT LIGHT REMOVAL/INSTALLATION [5-DOOR, SPORT WAGON].)
4. Disconnect the auto-dimming mirror connector. (vehicles with auto-dimming mirror only)
5. Remove the sunvisors. (See 09–17–25 SUNVISOR REMOVAL/INSTALLATION.)
6. Remove the assist handle. (See 09–17–26 ASSIST HANDLE REMOVAL/INSTALLATION.)
7. Remove the headliner. (See 09–17–24 HEADLINER REMOVAL/INSTALLATION.)
8. Disconnect the front drain hose from the sunroof frame.
9. Remove the front drain hose from the clips.
10. Pull the front drain hose into the room side.
11. Remove the front drain hose.

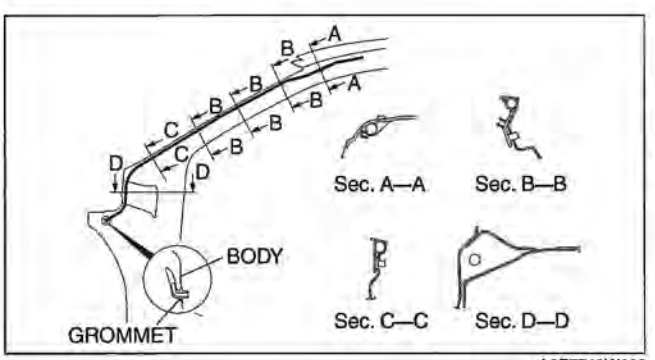

A6E7740W009

09–15

FRONT DRAIN HOSE INSTALLATION

E6U091569920W02

Caution

- **If the front drain hose is pinched or bent anywhere, the water in the hose may not discharge and enter the inside of the vehicle. During and after installation of the trims and the headliner, always make sure there is no interference with the front drain hose. Fix any problem if found.**

1. Apply soapy water to the front drain hose inserting area.
2. Insert one end (the wider end) of the front drain hose into the sunroof frame.
3. Install the front drain hose to the clips, parallel to the pillar and free of slack.
4. Insert the front drain hose joint into the hinge pillar inner hole.
5. Install the headliner. (See 09–17–24 HEADLINER REMOVAL/INSTALLATION.)
6. Install the assist handle. (See 09–17–26 ASSIST HANDLE REMOVAL/INSTALLATION.)
7. Install the sunvisors. (See 09–17–25 SUNVISOR REMOVAL/INSTALLATION.)
8. Connect the auto-dimming mirror connector. (vehicles with auto-dimming mirror only)
9. Install the following parts:
   (1) Cargo compartment light (See 09–18–29 CARGO COMPARTMENT LIGHT REMOVAL/INSTALLATION [5-DOOR, SPORT WAGON].)
   (2) Front and rear map lights (See 09–18–27 FRONT MAP LIGHT REMOVAL/INSTALLATION.) (See 09–18–28 REAR MAP LIGHT REMOVAL/INSTALLATION.)
   (3) D-pillar trims (Sport Wagon) (See 09–17–15 D-PILLAR TRIM REMOVAL/INSTALLATION [SPORT WAGON].)
   (4) C-pillar trims (See 09–17–14 C-PILLAR TRIM REMOVAL/INSTALLATION.)
   (5) B-pillar upper trims (See 09–17–11 B-PILLAR UPPER TRIM REMOVAL/INSTALLATION.)
   (6) B-pillar lower trims (See 09–17–10 B-PILLAR LOWER TRIM REMOVAL/INSTALLATION.)
   (7) Rear scuff plate (See 09–17–12 REAR SCUFF PLATE REMOVAL/INSTALLATION.)
   (8) Front scuff plate (See 09–17–11 FRONT SCUFF PLATE REMOVAL/INSTALLATION.)
   (9) Upper anchor of the front seat belt (See 08–11–3 FRONT SEAT BELT REMOVAL/INSTALLATION.)
   (10) A-pillar trims (See 09–17–10 A-PILLAR TRIM REMOVAL/INSTALLATION.)
   (11) Sunroof seaming welt (vehicles with sunroof only)
   (12) Microphone (vehicles with car-navigation system)(See 09–20–14 MICROPHONE REMOVAL/INSTALLATION.)
10. Install the seaming welt.

REAR DRAIN HOSE REMOVAL [SPORT SEDAN, 5-DOOR]

E6U091569920W03

1. Disconnect the negative battery cable.
2. Partially peel back the seaming welt.
3. Remove the following parts:
   (1) Microphone (vehicles with car-navigation system)(See 09–20–14 MICROPHONE REMOVAL/INSTALLATION.)
   (2) Sunroof seaming welt (vehicles with sunroof only)
   (3) A-pillar trims (See 09–17–10 A-PILLAR TRIM REMOVAL/INSTALLATION.)
   (4) Upper anchor of the front seat belt (See 08–11–3 FRONT SEAT BELT REMOVAL/INSTALLATION.)
   (5) Front scuff plate (See 09–17–11 FRONT SCUFF PLATE REMOVAL/INSTALLATION.)
   (6) Rear scuff plate (See 09–17–12 REAR SCUFF PLATE REMOVAL/INSTALLATION.)
   (7) B-pillar lower trims (See 09–17–10 B-PILLAR LOWER TRIM REMOVAL/INSTALLATION.)
   (8) B-pillar upper trims (See 09–17–11 B-PILLAR UPPER TRIM REMOVAL/INSTALLATION.)
   (9) C-pillar trims (See 09–17–14 C-PILLAR TRIM REMOVAL/INSTALLATION.)
   (10) D-pillar trims (Sport Wagon) (See 09–17–15 D-PILLAR TRIM REMOVAL/INSTALLATION [SPORT WAGON].)
   (11) Front and rear map lights (See 09–18–27 FRONT MAP LIGHT REMOVAL/INSTALLATION.) (See 09–18–28 REAR MAP LIGHT REMOVAL/INSTALLATION.)
   (12) Cargo compartment light (See 09–18–29 CARGO COMPARTMENT LIGHT REMOVAL/INSTALLATION [5-DOOR, SPORT WAGON].)
4. Disconnect the auto-dimming mirror connector. (vehicles with auto-dimming mirror only)
5. Remove the sunvisors. (See 09–17–25 SUNVISOR REMOVAL/INSTALLATION.)
6. Remove the assist handle. (See 09–17–26 ASSIST HANDLE REMOVAL/INSTALLATION.)
7. Remove the headliner. (See 09–17–24 HEADLINER REMOVAL/INSTALLATION.)
8. Remove the trunk side trim.(See 09–17–17 TRUNK SIDE TRIM REMOVAL/INSTALLATION.)
9. Remove the trunk side upper trim.(5-DOOR)(See 09–17–18 TRUNK SIDE UPPER TRIM REMOVAL/INSTALLATION [5-DOOR, SPORT WAGON].)
10. Disconnect the rear drain hose from the sunroof frame.
11. Remove the rear drain hose from the clips.

SPORT SEDAN

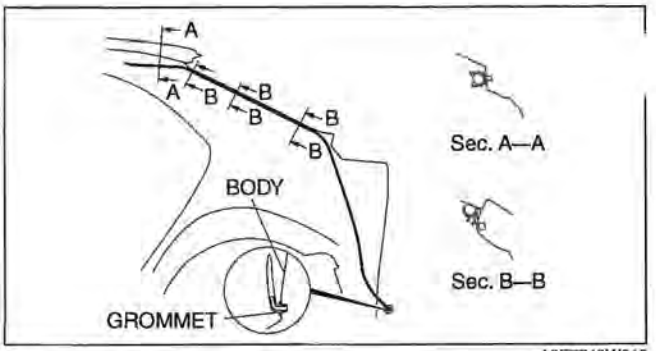

A6E7740W010

5-DOOR

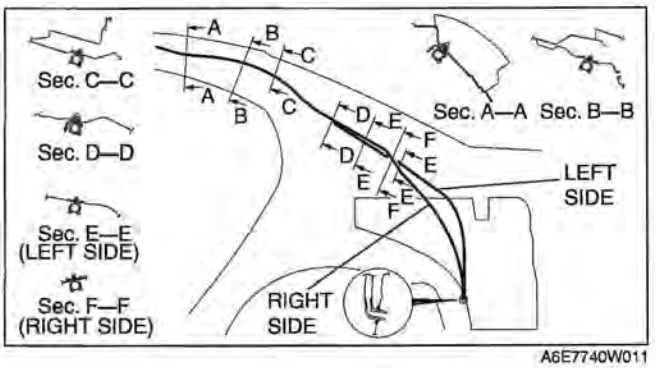

A6E7740W011

12. Pull the rear drain hose into the room side.
13. Remove the rear drain hose.

REAR DRAIN HOSE REMOVAL [SPORT WAGON]

E6U091569920W04

1. Disconnect the negative battery cable.
2. Partially peel back the seaming welt.
   Remove the following parts:
   (1) Microphone (vehicles with car-navigation system)(See 09–20–14 MICROPHONE REMOVAL/INSTALLATION.)
   (2) Sunroof seaming welt (vehicles with sunroof only)
   (3) A-pillar trims (See 09–17–10 A-PILLAR TRIM REMOVAL/INSTALLATION.)
   (4) Upper anchor of the front seat belt (See 08–11–3 FRONT SEAT BELT REMOVAL/INSTALLATION.)
   (5) Front scuff plate (See 09–17–11 FRONT SCUFF PLATE REMOVAL/INSTALLATION.)
   (6) Rear scuff plate (See 09–17–12 REAR SCUFF PLATE REMOVAL/INSTALLATION.)
   (7) B-pillar lower trims (See 09–17–10 B-PILLAR LOWER TRIM REMOVAL/INSTALLATION.)
   (8) B-pillar upper trims (See 09–17–11 B-PILLAR UPPER TRIM REMOVAL/INSTALLATION.)
   (9) C-pillar trims (See 09–17–14 C-PILLAR TRIM REMOVAL/INSTALLATION.)
   (10) D-pillar trims (Sport Wagon) (See 09–17–15 D-PILLAR TRIM REMOVAL/INSTALLATION [SPORT WAGON].)
   (11) Front and rear map lights (See 09–18–27 FRONT MAP LIGHT REMOVAL/INSTALLATION.) (See 09–18–28 REAR MAP LIGHT REMOVAL/INSTALLATION.)
   (12) Cargo compartment light (See 09–18–29 CARGO COMPARTMENT LIGHT REMOVAL/INSTALLATION [5-DOOR, SPORT WAGON].)
4. Disconnect the auto-dimming mirror connector. (vehicles with auto-dimming mirror only)
5. Remove the sunvisors. (See 09–17–25 SUNVISOR REMOVAL/INSTALLATION.)
6. Remove the assist handle. (See 09–17–26 ASSIST HANDLE REMOVAL/INSTALLATION.)
7. Remove the headliner. (See 09–17–24 HEADLINER REMOVAL/INSTALLATION.)
8. Remove the trunk side trim.(See 09–17–17 TRUNK SIDE TRIM REMOVAL/INSTALLATION.)
9. Remove the trunk side upper trim.(See 09–17–18 TRUNK SIDE UPPER TRIM REMOVAL/INSTALLATION [5-DOOR, SPORT WAGON].)
10. Disconnect the rear drain hose from the sunroof frame.
11. Remove the rear drain hose from the clips.
12. Pull the rear drain hose into the room side.
13. Remove the rear drain hose.

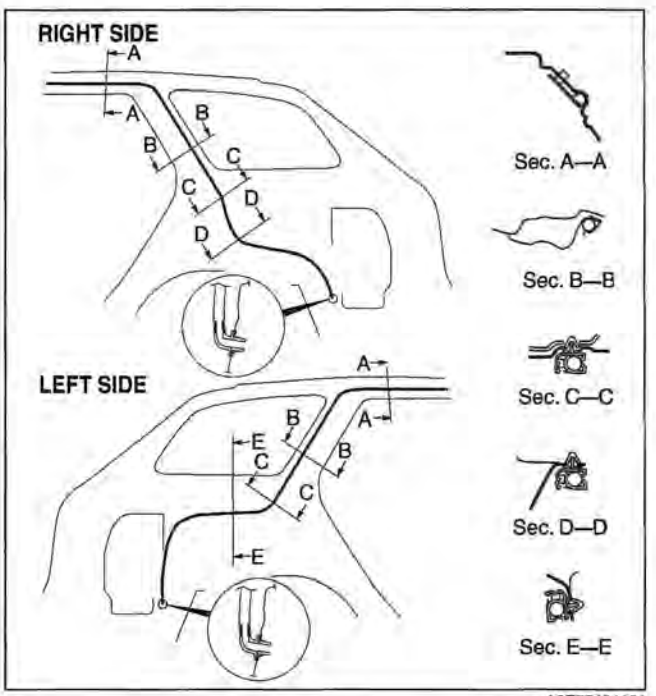

A6E77401101

REAR DRAIN HOSE INSTALLATION

E6U091569920W05

Caution

- **If the rear drain hose is pinched or bent anywhere, the water in the hose may not discharge and enter the inside of the vehicle. During and after installation of the trims and the headliner, always make sure there is no interference with the rear drain hose. Fix any problem if found.**

1. Apply soapy water to the rear drain hose inserting area.
2. Insert one end (the wider side) of the rear drain hose into the sunroof frame.
3. Install the rear drain hose to the clips parallel to the pillar and free of slack.
4. Insert the rear drain hose joint into the rear pillar inner hole.
5. Install the trunk side trim.(See 09–17–17 TRUNK SIDE TRIM REMOVAL/INSTALLATION.)
6. Install the trunk side upper trim (5-DOOR, SPORT WAGON).(See 09–17–18 TRUNK SIDE UPPER TRIM REMOVAL/INSTALLATION [5-DOOR, SPORT WAGON].)
7. Install the headliner. (See 09–17–24 HEADLINER REMOVAL/INSTALLATION.)
8. Install the assist handle. (See 09–17–26 ASSIST HANDLE REMOVAL/INSTALLATION.)
9. Install the sunvisors. (See 09–17–25 SUNVISOR REMOVAL/INSTALLATION.)
10. Connect the auto-dimming mirror connector. (vehicles with auto-dimming mirror only)
11. Install the following parts:
    (1) Cargo compartment light (See 09–18–29 CARGO COMPARTMENT LIGHT REMOVAL/INSTALLATION [5-DOOR, SPORT WAGON].)
    (2) Front and rear map lights (See 09–18–27 FRONT MAP LIGHT REMOVAL/INSTALLATION.) (See 09–18–28 REAR MAP LIGHT REMOVAL/INSTALLATION.)
    (3) D-pillar trims (Sport Wagon) (See 09–17–15 D-PILLAR TRIM REMOVAL/INSTALLATION [SPORT WAGON].)
    (4) C-pillar trims (See 09–17–14 C-PILLAR TRIM REMOVAL/INSTALLATION.)
    (5) B-pillar upper trims (See 09–17–11 B-PILLAR UPPER TRIM REMOVAL/INSTALLATION.)
    (6) B-pillar lower trims (See 09–17–10 B-PILLAR LOWER TRIM REMOVAL/INSTALLATION.)
    (7) Rear scuff plate (See 09–17–12 REAR SCUFF PLATE REMOVAL/INSTALLATION.)
    (8) Front scuff plate (See 09–17–11 FRONT SCUFF PLATE REMOVAL/INSTALLATION.)
    (9) Upper anchor of the front seat belt (See 08–11–3 FRONT SEAT BELT REMOVAL/INSTALLATION.)
    (10) A-pillar trims (See 09–17–10 A-PILLAR TRIM REMOVAL/INSTALLATION.)
    (11) Sunroof seaming welt (vehicles with sunroof only)
    (12) Microphone (vehicles with car-navigation system)(See 09–20–14 MICROPHONE REMOVAL/INSTALLATION.)
12. Install the seaming welt.

SUNROOF UNIT REMOVAL/INSTALLATION

E6U091569850W04

1. Disconnect the negative battery cable.
2. Partially peel back the seaming welt.
3. Remove the following parts:
    (1) Microphone (vehicles with car-navigation system)(See 09–20–14 MICROPHONE REMOVAL/INSTALLATION.)
    (2) Sunroof seaming welt (vehicles with sunroof only)
    (3) A-pillar trims (See 09–17–10 A-PILLAR TRIM REMOVAL/INSTALLATION.)
    (4) Upper anchor of the front seat belt (See 08–11–3 FRONT SEAT BELT REMOVAL/INSTALLATION.)
    (5) Front scuff plate (See 09–17–11 FRONT SCUFF PLATE REMOVAL/INSTALLATION.)
    (6) Rear scuff plate (See 09–17–12 REAR SCUFF PLATE REMOVAL/INSTALLATION.)
    (7) B-pillar lower trims (See 09–17–10 B-PILLAR LOWER TRIM REMOVAL/INSTALLATION.)
    (8) B-pillar upper trims (See 09–17–11 B-PILLAR UPPER TRIM REMOVAL/INSTALLATION.)
    (9) C-pillar trims (See 09–17–14 C-PILLAR TRIM REMOVAL/INSTALLATION.)
    (10) D-pillar trims (Sport Wagon) (See 09–17–15 D-PILLAR TRIM REMOVAL/INSTALLATION [SPORT WAGON].)
    (11) Front and rear map lights (See 09–18–27 FRONT MAP LIGHT REMOVAL/INSTALLATION.) (See 09–18–28 REAR MAP LIGHT REMOVAL/INSTALLATION.)
    (12) Cargo compartment light (See 09–18–29 CARGO COMPARTMENT LIGHT REMOVAL/INSTALLATION [5-DOOR, SPORT WAGON].)
4. Disconnect the auto-dimming mirror connector. (vehicles with auto-dimming mirror only)
5. Remove the sunvisors. (See 09–17–25 SUNVISOR REMOVAL/INSTALLATION.)
6. Remove the assist handle. (See 09–17–26 ASSIST HANDLE REMOVAL/INSTALLATION.)
7. Remove the headliner. (See 09–17–24 HEADLINER REMOVAL/INSTALLATION.)
8. Remove the glass panel.(See 09–15–4 GLASS PANEL REMOVAL/INSTALLATION.)
9. Disconnect the front and rear drain hose from the sunroof frame.

10. Remove the bolt A, and then remove the rear set bracket.
11. Remove the bolt B and nuts, and then remove the sunroof unit.
13. Install in the reverse order of removal.
13. Adjust the glass panel. (See 09–15–4 GLASS PANEL ADJUSTMENT.)

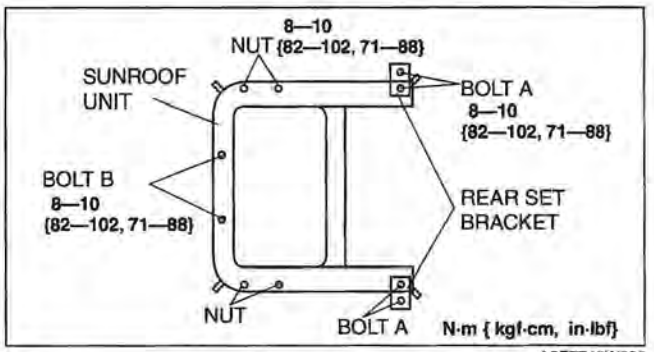

A6E7740W005

SUNROOF UNIT DISASSEMBLY/ASSEMBLY

E6U091569850W05

1. Disassemble in the order indicated in the table.
2. Assemble in the reverse order of disassembly.

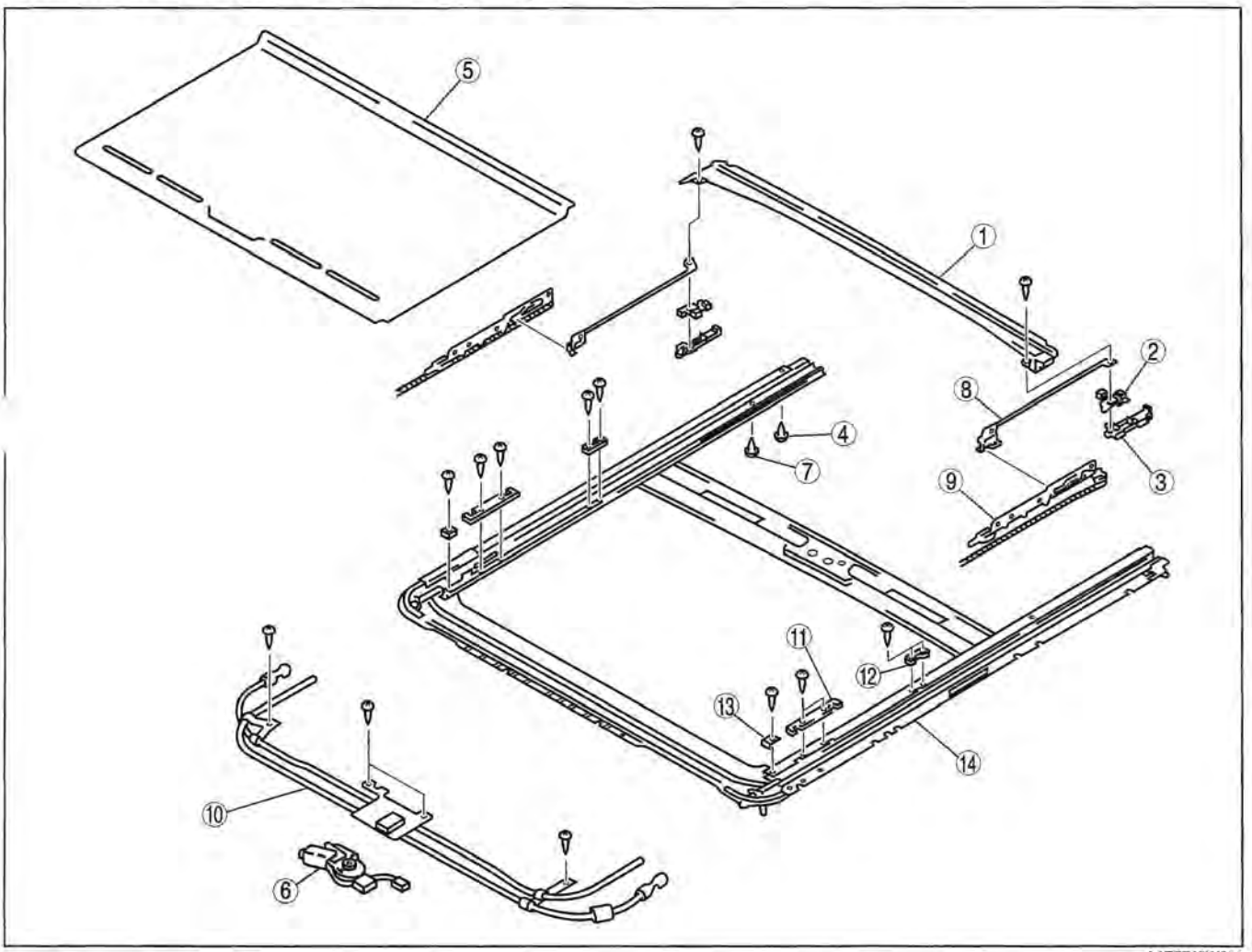

A6E7740W001

1	Drip rail
2	Position plate
3	Slider (See 09–15–10 Slider Disassembly Note)
4	Rear stopper A
5	Sunshade
6	Sunroof motor
7	Rear stopper B

8	Decoration link (See 09–15–10 Decoration Link Assembly Note)
9	Guide (See 09–15–10 Guide Disassembly Note)
10	Drive unit (See 09–15–10 Guide Assembly Note)
11	Set plate A
12	Set plate B
13	Front stopper
14	Frame

Slider Disassembly Note

1. Remove the screw.
2. Slide the slider rearward, and remove it from the sunroof frame.

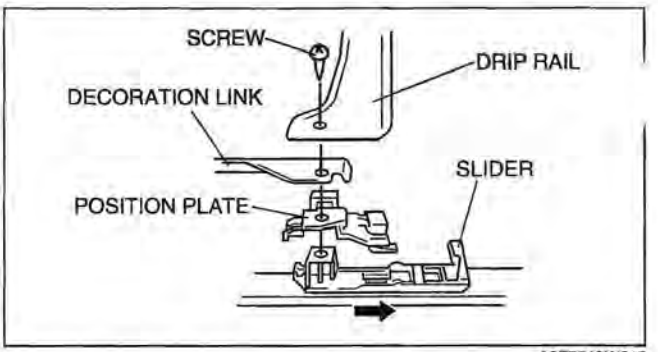

A6E7740W012

Guide Disassembly Note

1. Slide the guide rearward, and remove it from the sunroof frame.

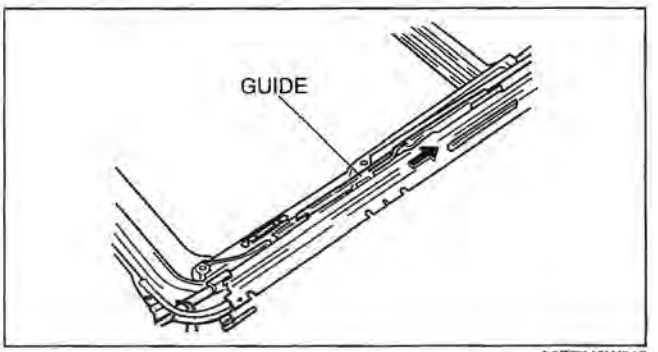

A6E7740W013

Decoration Link Assembly Note

1. Set the pin in the decoration link.

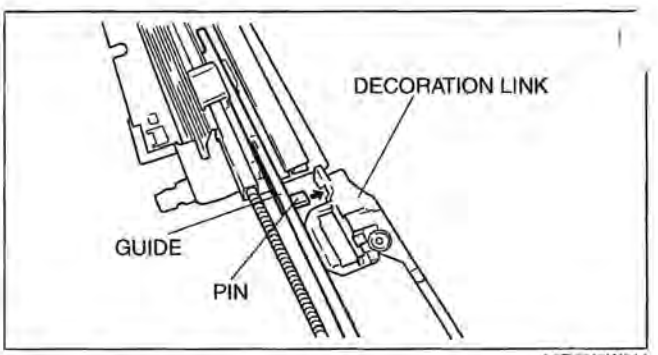

A6E7740W014

Guide Assembly Note

1. Move the guide by hand until it comes to the front stopper.
2. Move the guide by hand until center of pin comes between mark A and B.

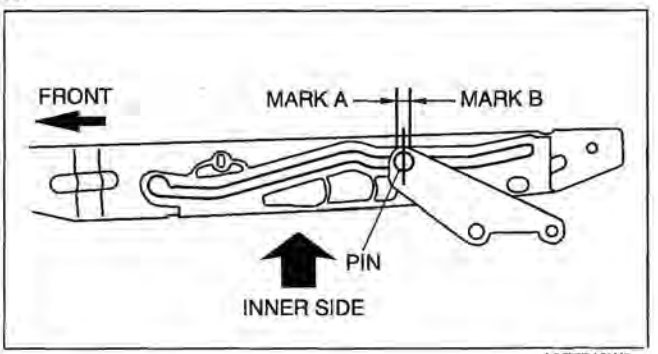

A6E7740W

SUNROOF MOTOR REMOVAL

E6U091569873W01

1. Disconnect the negative battery cable.
2. Partially peel back the seaming welt.
   Remove the following parts:
   (1) Microphone (vehicles with car-navigation system)(See 09–20–14 MICROPHONE REMOVAL/INSTALLATION.)
   (2) Sunroof seaming welt (vehicles with sunroof only)
   (3) A-pillar trims (See 09–17–10 A-PILLAR TRIM REMOVAL/INSTALLATION.)
   (4) Upper anchor of the front seat belt (See 08–11–3 FRONT SEAT BELT REMOVAL/INSTALLATION.)
   (5) Front scuff plate (See 09–17–11 FRONT SCUFF PLATE REMOVAL/INSTALLATION.)
   (6) Rear scuff plate (See 09–17–12 REAR SCUFF PLATE REMOVAL/INSTALLATION.)
   (7) B-pillar lower trims (See 09–17–10 B-PILLAR LOWER TRIM REMOVAL/INSTALLATION.)
   (8) B-pillar upper trims (See 09–17–11 B-PILLAR UPPER TRIM REMOVAL/INSTALLATION.)
   (9) C-pillar trims (See 09–17–14 C-PILLAR TRIM REMOVAL/INSTALLATION.)
   (10) D-pillar trims (Sport Wagon) (See 09–17–15 D-PILLAR TRIM REMOVAL/INSTALLATION [SPORT WAGON].)
   (11) Front and rear map lights (See 09–18–27 FRONT MAP LIGHT REMOVAL/INSTALLATION.) (See 09–18–28 REAR MAP LIGHT REMOVAL/INSTALLATION.)
   (12) Cargo compartment light (See 09–18–29 CARGO COMPARTMENT LIGHT REMOVAL/INSTALLATION [5-DOOR, SPORT WAGON].)
4. Disconnect the auto-dimming mirror connector. (vehicles with auto-dimming mirror only)
5. Remove the sunvisors. (See 09–17–25 SUNVISOR REMOVAL/INSTALLATION.)
6. Remove the assist handle. (See 09–17–26 ASSIST HANDLE REMOVAL/INSTALLATION.)
7. Remove the headliner. (See 09–17–24 HEADLINER REMOVAL/INSTALLATION.)
8. Disconnect the connector.
9. Remove the screws, and then remove the sunroof motor.

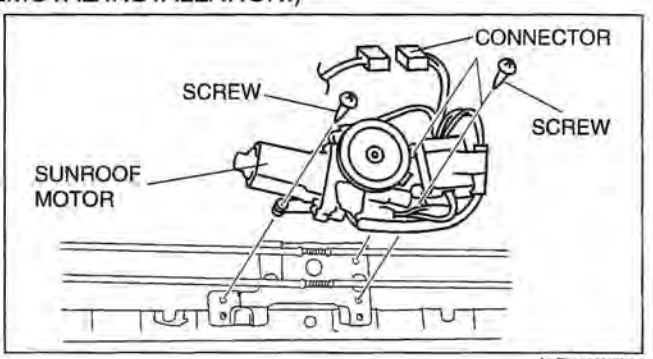

A6E7740W002

SUNROOF MOTOR INSTALLATION

E6U091569873W02

1. Connect the sunroof motor connector.
2. Connect the sunroof switch connector.
3. Connect the negative battery cable.
4. Turn the ignition switch to ON position.
5. Press the CLOSE side of the slide switch until the sunroof motor stops.
6. Disconnect the sunroof switch connector.
7. Install the screws, and then install the sunroof motor.
8. Install the headliner. (See 09–17–24 HEADLINER REMOVAL/INSTALLATION.)
9. Install the assist handle. (See 09–17–26 ASSIST HANDLE REMOVAL/INSTALLATION.)
10. Install the sunvisors. (See 09–17–25 SUNVISOR REMOVAL/INSTALLATION.)
11. Connect the auto-dimming mirror connector. (vehicles with auto-dimming mirror only)
12. Install the following parts:
    (1) Cargo compartment light (See 09–18–29 CARGO COMPARTMENT LIGHT REMOVAL/INSTALLATION [5-DOOR, SPORT WAGON].)
    (2) Front and rear map lights (See 09–18–27 FRONT MAP LIGHT REMOVAL/INSTALLATION.) (See 09–18–28 REAR MAP LIGHT REMOVAL/INSTALLATION.)
    (3) D-pillar trims (Sport Wagon) (See 09–17–15 D-PILLAR TRIM REMOVAL/INSTALLATION [SPORT WAGON].)
    (4) C-pillar trims (See 09–17–14 C-PILLAR TRIM REMOVAL/INSTALLATION.)
    (5) B-pillar upper trims (See 09–17–11 B-PILLAR UPPER TRIM REMOVAL/INSTALLATION.)
    (6) B-pillar lower trims (See 09–17–10 B-PILLAR LOWER TRIM REMOVAL/INSTALLATION.)
    (7) Rear scuff plate (See 09–17–12 REAR SCUFF PLATE REMOVAL/INSTALLATION.)
    (8) Front scuff plate (See 09–17–11 FRONT SCUFF PLATE REMOVAL/INSTALLATION.)
    (9) Upper anchor of the front seat belt (See 08–11–3 FRONT SEAT BELT REMOVAL/INSTALLATION.)
    (10) A-pillar trims (See 09–17–10 A-PILLAR TRIM REMOVAL/INSTALLATION.)
    (11) Sunroof seaming welt (vehicles with sunroof only)
    (12) Microphone (vehicles with car-navigation system)(See 09–20–14 MICROPHONE REMOVAL/INSTALLATION.)
13. Install the seaming welt.

SUNROOF MOTOR INSPECTION

E6U091569873W03

Motor

1. Apply battery positive voltage to the sunroof motor terminals and inspect the operation of the sunroof motor.
   - If not as specified, replace the sunroof motor.

Connection		Motor operation
2A	2B	
B+	GND	Turn left (Slide close/Tilt up)
GND	B+	Turn right (Slide open/Tilt down)

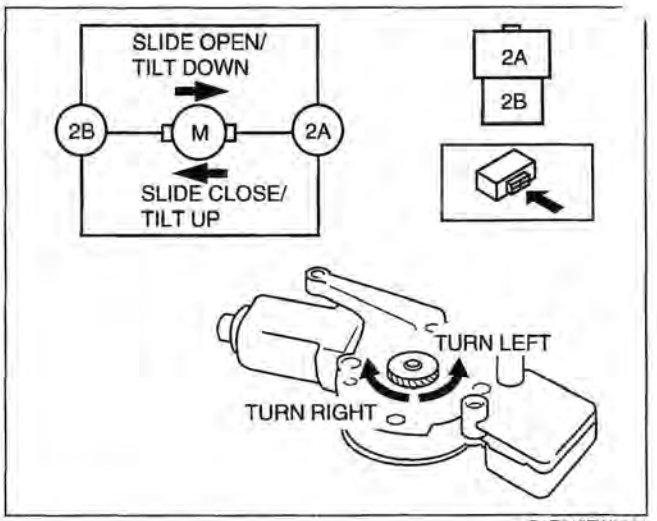

D6E915ZW5001

Limit Switch

1. Inspect for continuity between the sunroof motor terminals using an ohmmeter.
   - If not as specified, replace the sunroof motor.

O—O : Continuity

Glass panel position	Terminal						
	1A	1D	1F	1H	GND	2A	2B
Fully open			O		O	O	
Fully closed	O	O		O			O
Fully tilt up				O	O		O

A6E7740W021

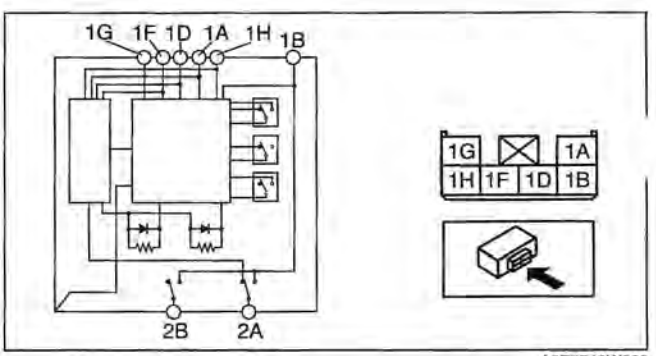

A6E7740W020

SUNROOF RELAY INSPECTION

E6U091569873W04

Note
- Sunroof relay is built in the sunroof motor.

1. Measure the voltage at the sunroof relay terminals as indicated below.
2. Disconnect the sunroof relay connector before inspecting for continuity at terminal 1G
   - If not as specified, inspect the parts listed under "Action" and the related wiring harnesses.
   - If the parts and wiring harnesses are okay but the system still does not work properly, replace the sunroof relay.

Terminal voltage list (Reference)

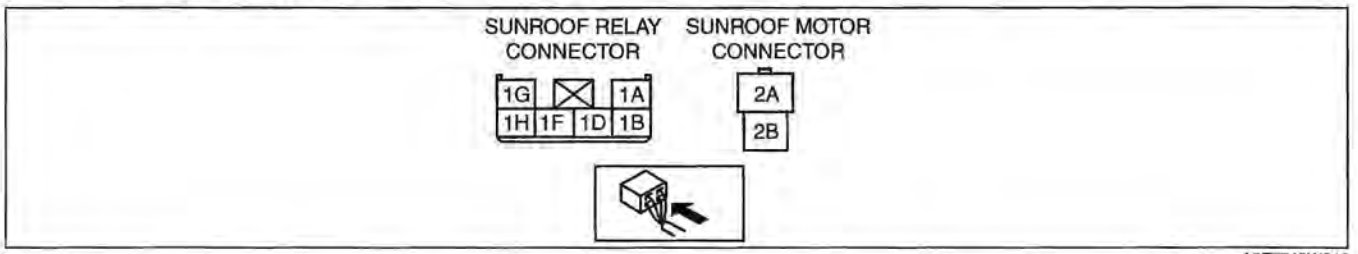

A6E7740W019

Terminal	Signal	Connected to	Test condition	Voltage (V)/ Continuity	Action
1A	Tilt down	Sunroof switch	Sunroof is tilting down. (Not including position when fully closed)	0	• Inspect sunroof switch (See 09–15–14 SUNROOF SWITCH INSPECTION) • Inspect related harness
			Other	B+	
1B	IG2	Sunroof motor	Ignition switch is at ON position.	B+	• Inspect A/C 15 A fuse • Inspect sunroof switch (See 09–15–14 SUNROOF SWITCH INSPECTION) • Inspect related harness
			Other	0	
1C	—	—	—	—	—
1D	Slide close	Sunroof switch	Sunroof is closing. (Including position when fully closed and open)	0	• Inspect sunroof switch (See 09–15–14 SUNROOF SWITCH INSPECTION) • Inspect related harness
			Other	B+	
1E	—	—	—	—	—
1F	Slide open	Sunroof switch	Sunroof is fully opening.	0	• Inspect sunroof switch (See 09–15–14 SUNROOF SWITCH INSPECTION) • Inspect related harness
			Other	B+	
1G	Sunroof relay ground	GND	Under any condition: inspect for continuity to ground.	Yes	• Inspect related harness
1H	Tilt up	Sunroof switch	Sunroof is tilting up. (Including position when fully closed)	0	• Inspect sunroof switch (See 09–15–14 SUNROOF SWITCH INSPECTION) • Inspect related harness
			Other	B+	
2A	Slide close/ tilt up	Sunroof motor	Sunroof is opening/tilting down.	0	• Inspect sunroof switch (See 09–15–14 SUNROOF SWITCH INSPECTION) • Inspect sunroof motor (See 09–15–12 SUNROOF MOTOR INSPECTION) • Inspect related harness
			Sunroof is closing/tilting up.	B+	
			Other	0	
2B	Slide open/tilt down	Sunroof motor	Sunroof is opening/tilting down.	B+	• Inspect sunroof switch (See 09–15–14 SUNROOF SWITCH INSPECTION) • Inspect sunroof motor (See 09–15–12 SUNROOF MOTOR INSPECTION) • Inspect related harness
			Sunroof is closing/tilting up.	0	
			Other	0	

SUNROOF SWITCH REMOVAL/INSTALLATION

E6U091566560W01

Note
- The sunroof switch is together with the front map light.

1. Disconnect the negative battery cable.
2. Remove the front map light from the headliner.(See 09–18–27 FRONT MAP LIGHT REMOVAL/ INSTALLATION.)
3. Install in the reverse order of removal.

SUNROOF SWITCH INSPECTION

E6U091566560W02

1. Inspect for continuity between the sunroof switch terminals using an ohmmeter.
   - If not as specified, replace the sunroof switch.

O—O : Continuity

Switch position	Terminal						
	1A	1D	1F	1G	1H	1B	2D
Slide open			O—O			O—O	
Slide closed		O——		O		O—O	
Tilt up				O—O		O—O	
Tilt down	O——			O		O—O	
Off						O—O	

A6E7740W022

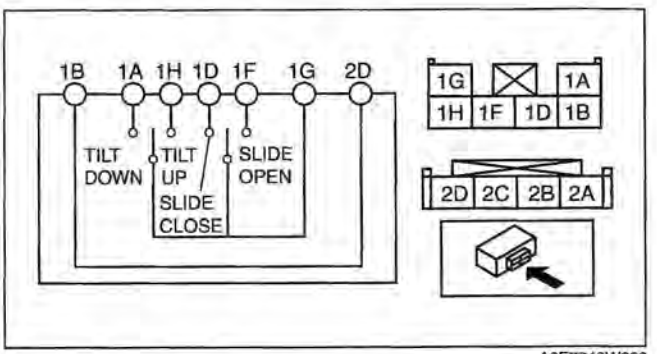

A6E7740W023

09–16 EXTERIOR TRIM

LOCATION INDEX..... 09–16–2
RADIATOR GRILLE
REMOVAL/INSTALLATION..... 09–16–3
Standard Type 09–16–3
Sport Type 09–16–3
L3 With TC..... 09–16–3
COWL GRILLE
REMOVAL/INSTALLATION
[L3 WITH TC] 09–16–4
COWL GRILLE REMOVAL/INSTALLATION
[EXCEPT L3 WITH TC]..... 09–16–4
FRONT FLAP
REMOVAL/INSTALLATION..... 09–16–4
SIDE STEP MOLDING
REMOVAL/INSTALLATION..... 09–16–5
SIDE PROTECTOR REMOVAL..... 09–16–5
SIDE PROTECTOR INSTALLATION.... 09–16–6
DOOR GARNISH REMOVAL 09–16–6
DOOR GARNISH INSTALLATION 09–16–7
EXTRACTOR CHAMBER
REMOVAL/INSTALLATION..... 09–16–7
REAR FINISHER
REMOVAL/INSTALLATION 09–16–7
REAR SPOILER
REMOVAL/INSTALLATION.....09–16–8
ROOF CARRIER BRACKET
REMOVAL/INSTALLATION
[SPORT WAGON].....09–16–8
FRONT BELTLINE
MOLDING REMOVAL.....09–16–9
FRONT BELTLINE
MOLDING INSTALLATION.....09–16–9
REAR BELTLINE
MOLDING REMOVAL.....09–16–10
REAR BELTLINE
MOLDING INSTALLATION.....09–16–10
ROOF MOLDING REMOVAL.....09–16–11
ROOF MOLDING INSTALLATION.....09–16–11
Vehicle with T-stud.....09–16–12
Vehicle without T-stud
(When replacing roof panel) 09–16–12

LOCATION INDEX

E6U091600000W01

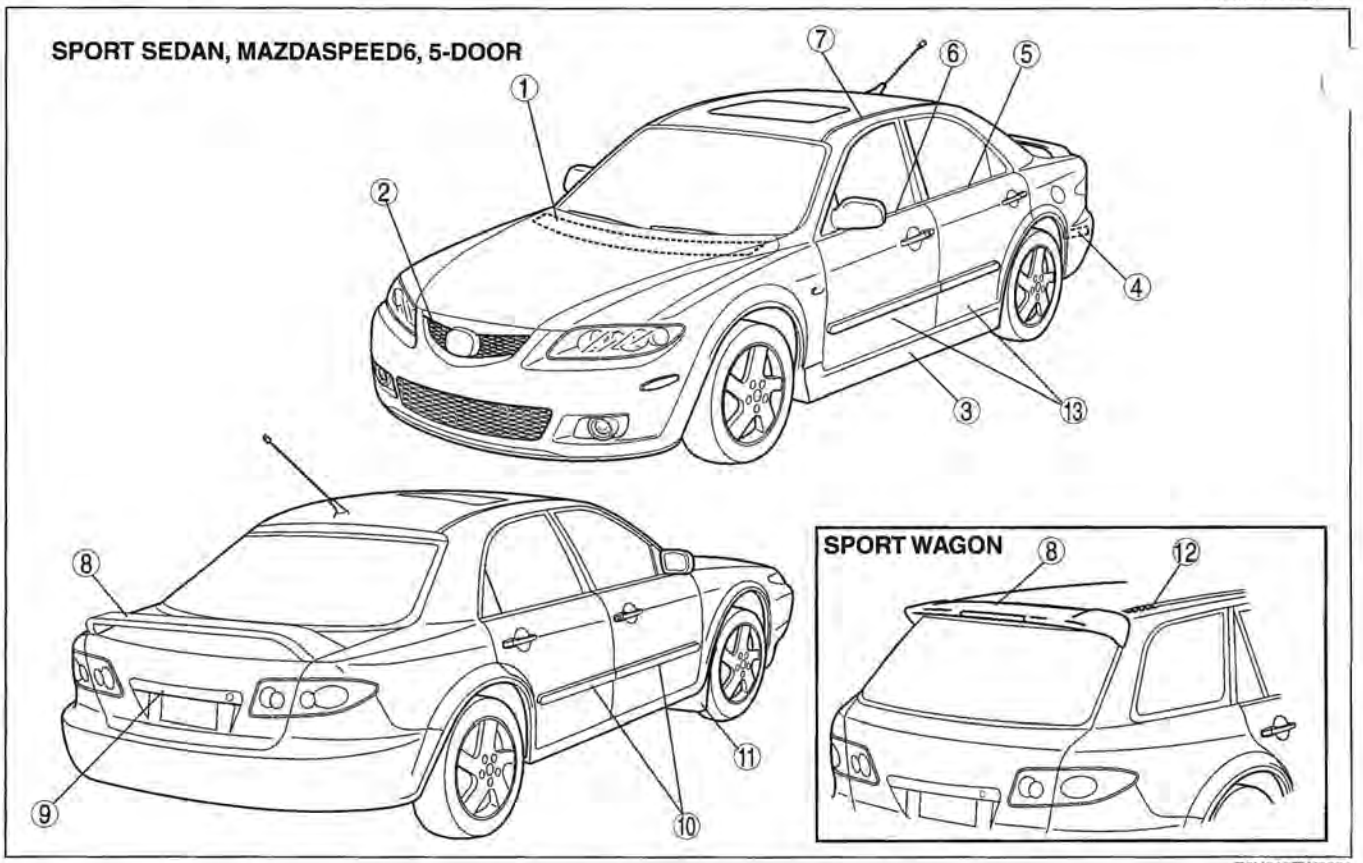

E6U916ZW5001

1	Cowl grille (See 09–16–4 COWL GRILLE REMOVAL/ INSTALLATION [L3 WITH TC]) (See 09–16–4 COWL GRILLE REMOVAL/ INSTALLATION [EXCEPT L3 WITH TC])
2	Radiator grille (See 09–16–3 RADIATOR GRILLE REMOVAL/ INSTALLATION)
3	Side step molding (See 09–16–5 SIDE STEP MOLDING REMOVAL/ INSTALLATION)
4	Extractor chamber (See 09–16–7 EXTRACTOR CHAMBER REMOVAL/INSTALLATION)
5	Rear beltline molding (See 09–16–10 REAR BELTLINE MOLDING REMOVAL) (See 09–16–10 REAR BELTLINE MOLDING INSTALLATION)
6	Front beltline molding (See 09–16–9 FRONT BELTLINE MOLDING REMOVAL) (See 09–16–9 FRONT BELTLINE MOLDING INSTALLATION)

7	Roof molding (See 09–16–11 ROOF MOLDING REMOVAL) (See 09–16–11 ROOF MOLDING INSTALLATION)
8	Rear spoiler (See 09–16–8 REAR SPOILER REMOVAL/ INSTALLATION)
9	Rear finisher (See 09–16–7 REAR FINISHER REMOVAL/ INSTALLATION)
10	Side protector (See 09–16–5 SIDE PROTECTOR REMOVAL) (See 09–16–6 SIDE PROTECTOR INSTALLATION)
11	Front flap (See 09–16–4 FRONT FLAP REMOVAL/ INSTALLATION)
12	Roof carrier bracket (See 09–16–8 ROOF CARRIER BRACKET REMOVAL/INSTALLATION [SPORT WAGON])
13	Door garnish [L3 with TC] (See 09–16–6 DOOR GARNISH REMOVAL) (See 09–16–7 DOOR GARNISH INSTALLATION)

RADIATOR GRILLE REMOVAL/INSTALLATION

E6U091650710W01

Standard Type

1. Remove the screws.
   Remove the fasteners.
2. Press clips A in the direction of the arrow, pull the radiator grille outward, and remove it from the front bumper.
3. Install in the reverse order of removal.

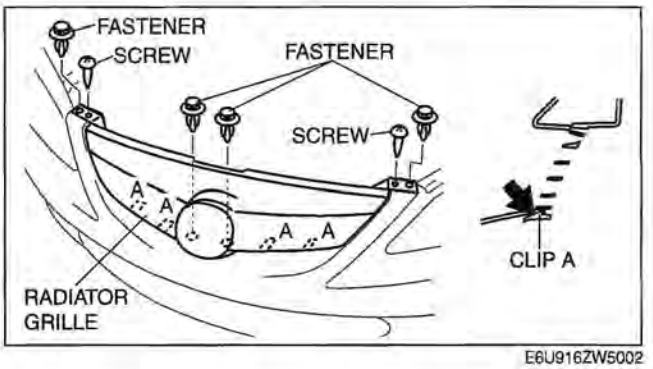

E6U916ZW5002

Sport Type

1. Remove the screws.
2. Remove the fasteners.
3. Press clips A in the direction of the arrow, pull the radiator grille outward, and remove it from the front bumper.
4. Install in the reverse order of removal.

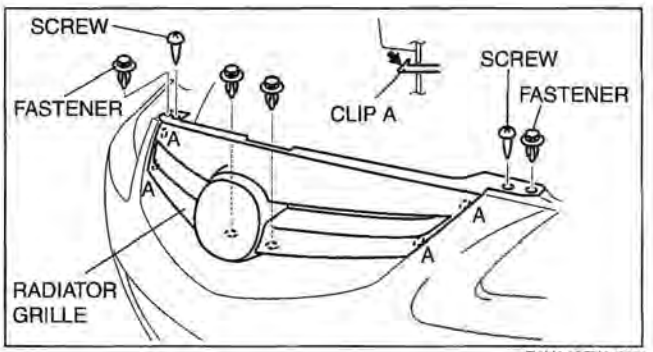

E6U916ZW5003

With TC

1. Remove the front bumper. (See 09–10–10 FRONT BUMPER REMOVAL/INSTALLATION.)
2. Remove the screws.
3. Press clips A in the direction of the arrow, pull the radiator grille outward, and remove it from the front bumper.
4. Install in the reverse order of removal.

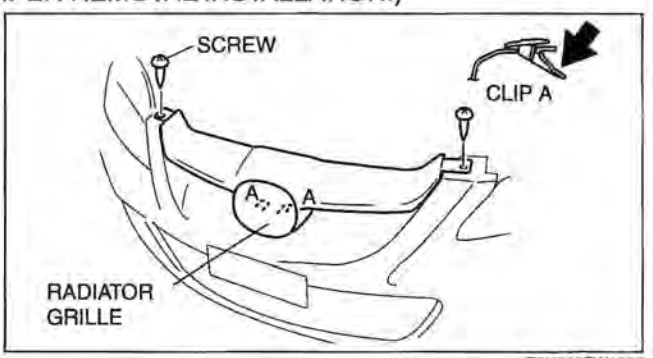

E6U916ZW1005

COWL GRILLE REMOVAL/INSTALLATION [L3 WITH TC]

E6U091650710W10

1. Remove the windshield wiper arm and blade. (See 09–19–4 WINDSHIELD WIPER ARM AND BLADE REMOVAL/INSTALLATION.)
2. Remove in the order indicated in the table.

1	Front fender molding
2	Weatherstrip
3	Cover
4	Cowl grille

3. Remove the washer nozzle. (See 09–19–11 WINDSHIELD WASHER NOZZLE REMOVAL/ INSTALLATION [L3 WITH TC].)
4. Install in the reverse order of removal.

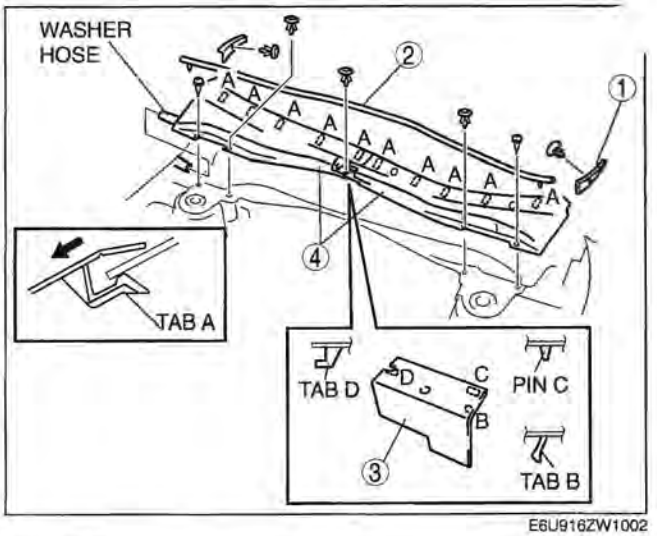

E6U916ZW1002

COWL GRILLE REMOVAL/INSTALLATION [EXCEPT L3 WITH TC]

E6U091650710W02

1. Remove the windshield wiper arm and blade. (See 09–19–4 WINDSHIELD WIPER ARM AND BLADE REMOVAL/INSTALLATION.)
2. Remove in the order indicated in the table.

1	Front fender molding
2	Weatherstrip
3	Cowl grille

3. Install in the reverse order of removal.

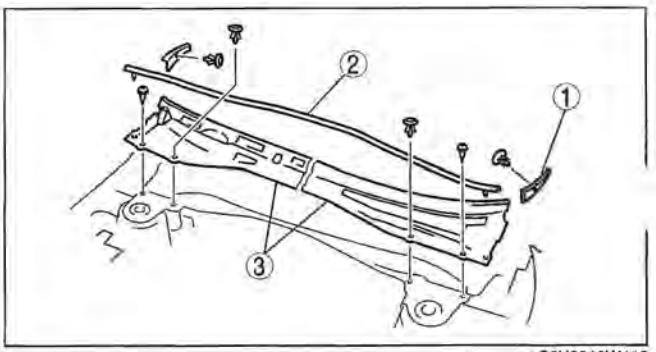

C6U0916W116

FRONT FLAP REMOVAL/INSTALLATION

E6U091651840W01

1. Remove the screws and fasteners.
2. Remove the front flap.
3. Install in the reverse order of removal.

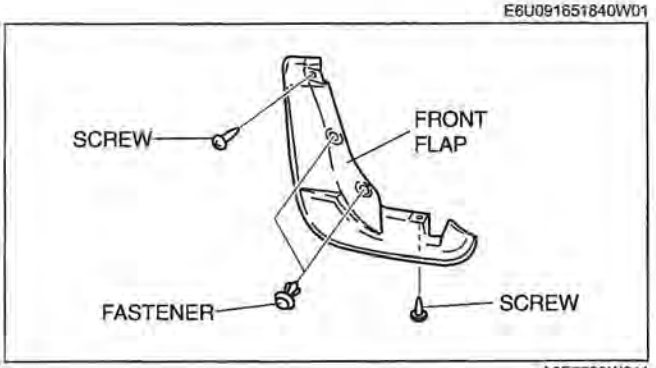

A6E7728W011

SIDE STEP MOLDING REMOVAL/INSTALLATION

1. Remove the fastener.
2. Pull the side step molding outward, then disengage clips A from the body.

E6U091651100W01

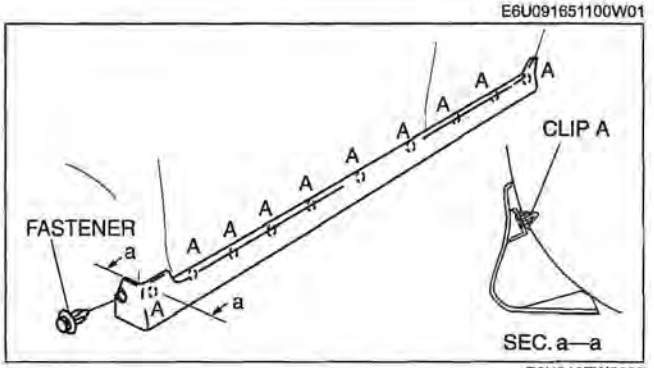

E6U916ZW5005

3. Slide the side step molding towards the front of the vehicle and remove clips B from the molding.
4. Remove the side step molding.
5. Install in the reverse order of removal.

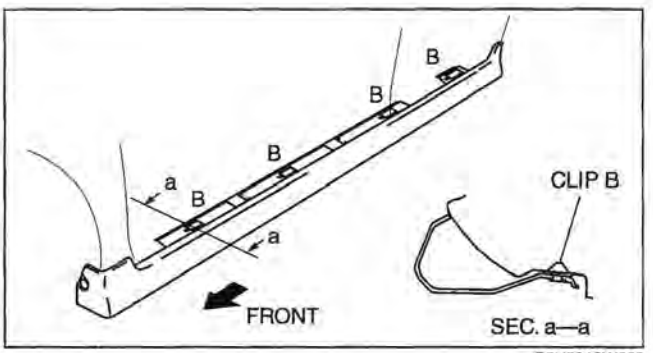

B6U0916W002

SIDE PROTECTOR REMOVAL

1. Pry the side protector end **20—30 mm {0.8—1.1 in}** using a flathead screwdriver or a razor.

Warning
- **Using a razor with bare hands can cause injury. Always wear gloves when using a razor.**

Note
- The side protector is installed with double-sided adhesive tape. If the side protector is difficult to remove, soften the double-sided adhesive tape using a hot air blower.

2. Pull the side protector outward, then remove it.

E6U091650710W03

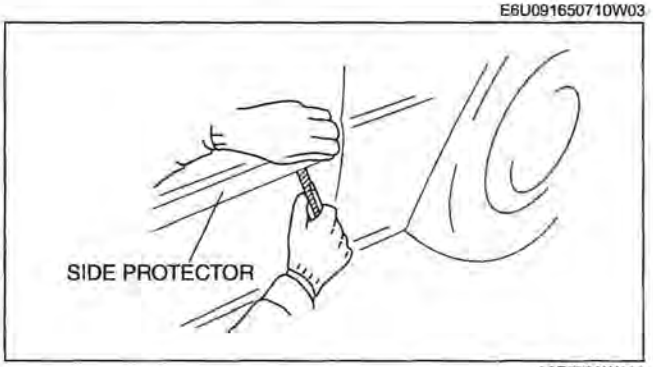

A6E7728W006

SIDE PROTECTOR INSTALLATION

E6U091650710W04

1. Remove the adhesive remaining on the side protector (if it will be reused) and the body using a razor.
2. Remove any grease or dirt from the adhesion surface of the side protector (if it will be reused) and the body.
3. Attach double-sided adhesive tape to the side protector as shown (if it will be reused).

Clearance
- **a: 50.0 mm {1.97 in}**
- **b: 2.0 mm {0.79 in}**
- **c: 12.0 mm {0.47 in}**
- **d: 3.0 mm {0.11 in}**
- **e: 3.0 mm {0.11 in}**
- **f: 1.0—3.0 mm {0.04—0.11 in}**
- **g: 5.0 mm {0.19 in}**
- **h: 1.0 mm {0.04 in}**

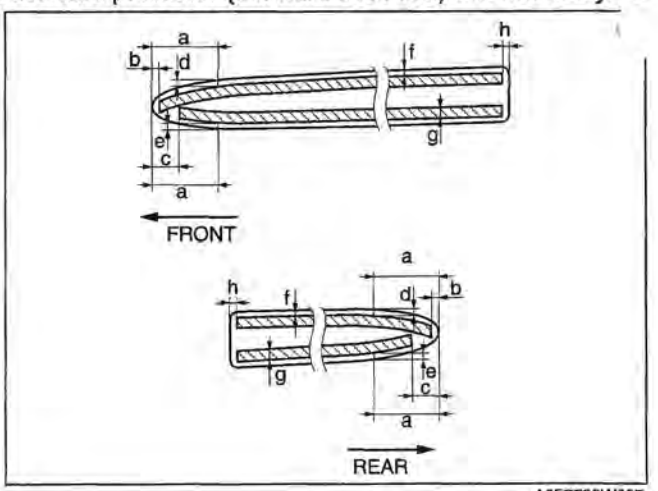

A6E7728W007

4. Peel off the backing of the double-sided adhesive tape and attach the side protector onto the body as shown.

Clearance
- **a: 1.2—4.2 mm {0.05—0.16 in}**
- **b: 3.2—6.2 mm {0.13—0.24 in}**

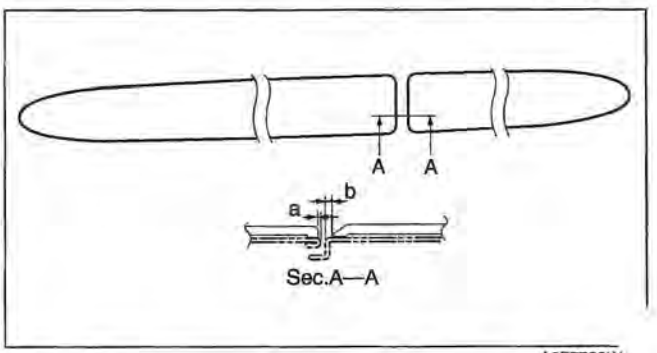

A6E7726W

DOOR GARNISH REMOVAL

E6U091650710W08

1. Cut the double-sided adhesive tape using a razor.

Warning
- **Using a razor with bare hands can cause injury. Always wear gloves when using a razor.**

Note
- The side protector is installed with double-sided adhesive tape. If the side protector is difficult to remove, soften the double-sided adhesive tape using a hot air blower.

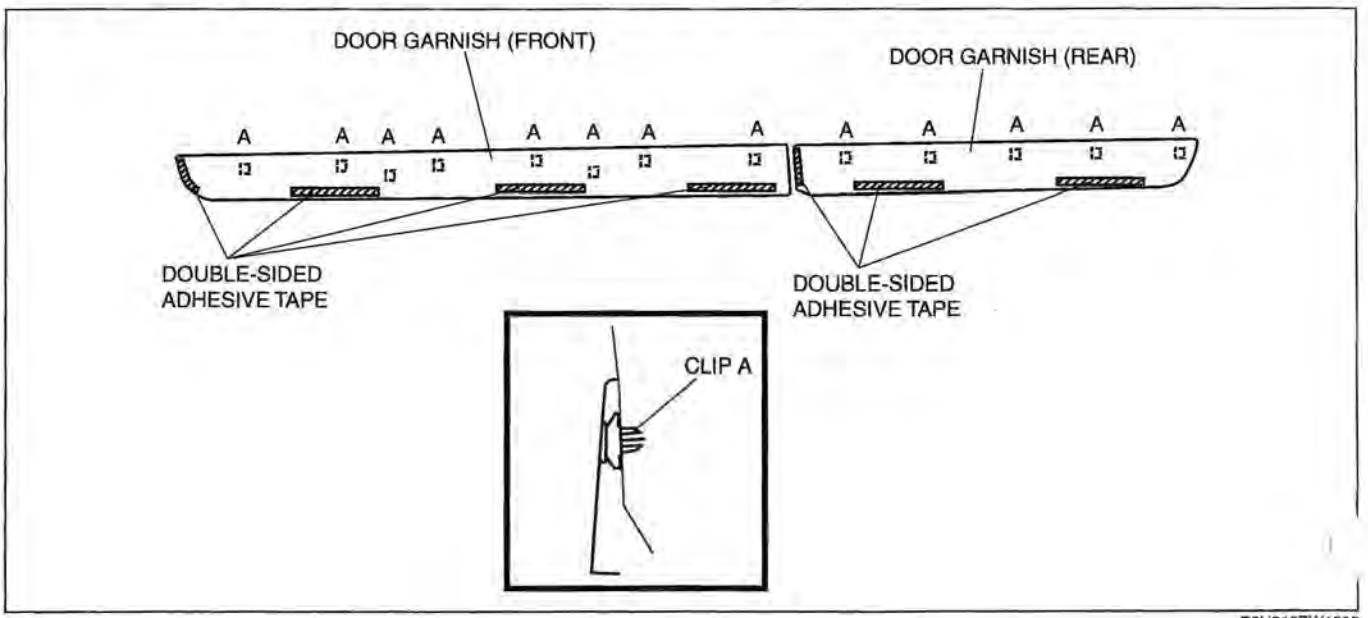

E6U916ZW1006

2. Remove the clip A.
3. Pull the door garnish outward, then remove it.

DOOR GARNISH INSTALLATION

E6U091650710W09

1. Remove the adhesive remaining on the side protector (if it will be reused) and the body using a razor.
2. Remove any grease or dirt from the adhesion surface of the side protector (if it will be reused) and the body. Attach double-sided adhesive tape to the side protector as shown (if it will be reused).

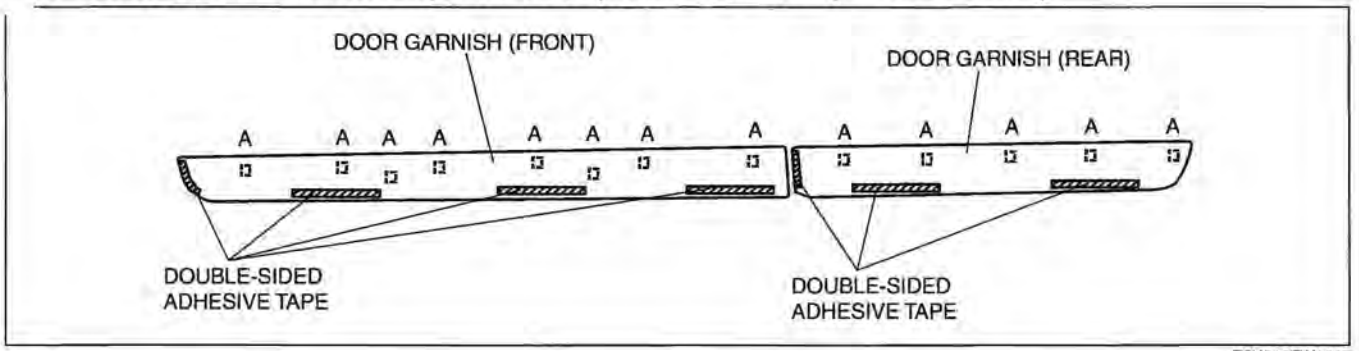

E8U916ZW1007

4. Peel off the backing of the double-sided adhesive tape and attach the door garnish onto the body.

EXTRACTOR CHAMBER REMOVAL/INSTALLATION

E6U091650710W05

1. Remove the trunk side trim. (See09–17–17 TRUNK SIDE TRIM REMOVAL/INSTALLATION.)
2. Remove the rear combination light. (See 09–18–14 REAR COMBINATION LIGHT REMOVAL/INSTALLATION.)
3. Remove the rear bumper. (See 09–10–13 REAR BUMPER REMOVAL/INSTALLATION.)
4. Remove the screw. (Sport Sedan, 5-Door)

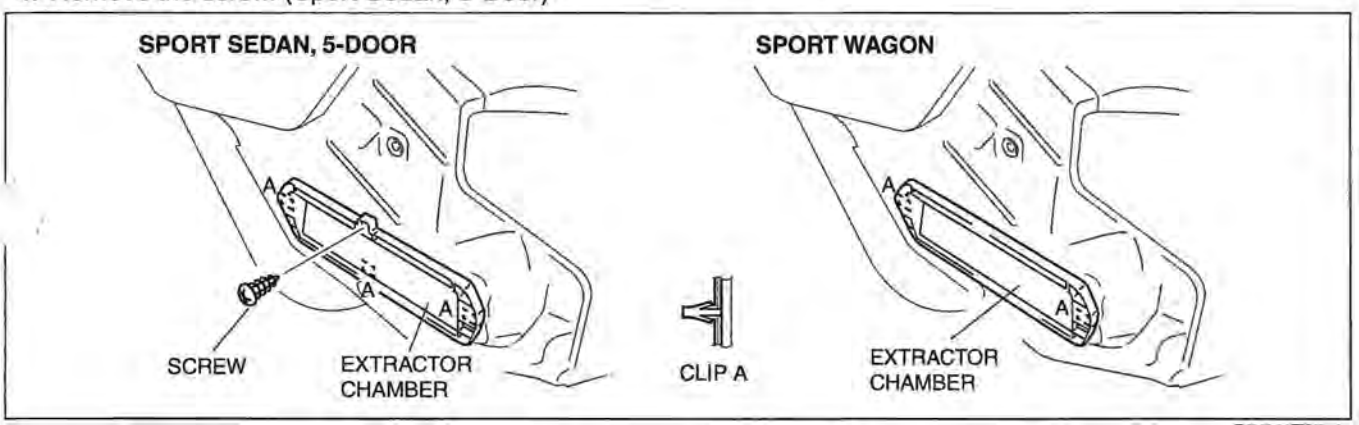

E6U916ZW5000

5. Squeeze the clips A and remove the extractor chamber from the vehicle side.
6. Install in the reverse order of removal.

REAR FINISHER REMOVAL/INSTALLATION

E6U091650030W01

1. Remove the trunk lid trim. (Sport Sedan) (See 09–17–20 TRUNK LID TRIM REMOVAL/INSTALLATION [SPORT SEDAN].)
2. Remove the liftgate upper trim, liftgate side trim and liftgate lower trim. (5-Door, Sport Wagon) (See 09–17–21 LIFTGATE UPPER TRIM REMOVAL/INSTALLATION [5-DOOR, SPORT WAGON], 09–17–22 LIFTGATE SIDE TRIM REMOVAL/INSTALLATION [5-DOOR, SPORT WAGON], 09–17–23 LIFTGATE LOWER TRIM REMOVAL/INSTALLATION [5-DOOR, SPORT WAGON].)
3. Remove the nuts.
4. Pull the rear finisher outward, then disengage clip A from the body.
5. Install in the reverse order of removal.

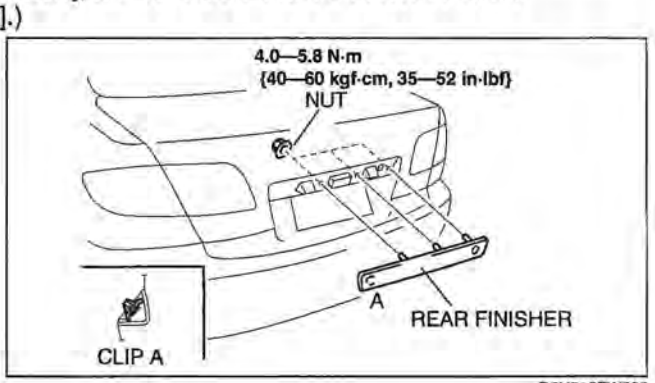

D6U916ZW003

REAR SPOILER REMOVAL/INSTALLATION

E6U091650710W06

1. Remove the trunk lid trim. (Sport Sedan) (See 09–17–20 TRUNK LID TRIM REMOVAL/INSTALLATION [SPORT SEDAN].)
2. Remove the liftgate upper trim, liftgate side trim and liftgate lower trim. (5-Door) (See 09–17–21 LIFTGATE UPPER TRIM REMOVAL/INSTALLATION [5-DOOR, SPORT WAGON], 09–17–22 LIFTGATE SIDE TRIM REMOVAL/INSTALLATION [5-DOOR, SPORT WAGON], 09–17–23 LIFTGATE LOWER TRIM REMOVAL/INSTALLATION [5-DOOR, SPORT WAGON].)
3. Remove the liftgate upper trim. (Sport Wagon) (See 09–17–21 LIFTGATE UPPER TRIM REMOVAL/INSTALLATION [5-DOOR, SPORT WAGON].)
4. Remove the bolts and nuts.

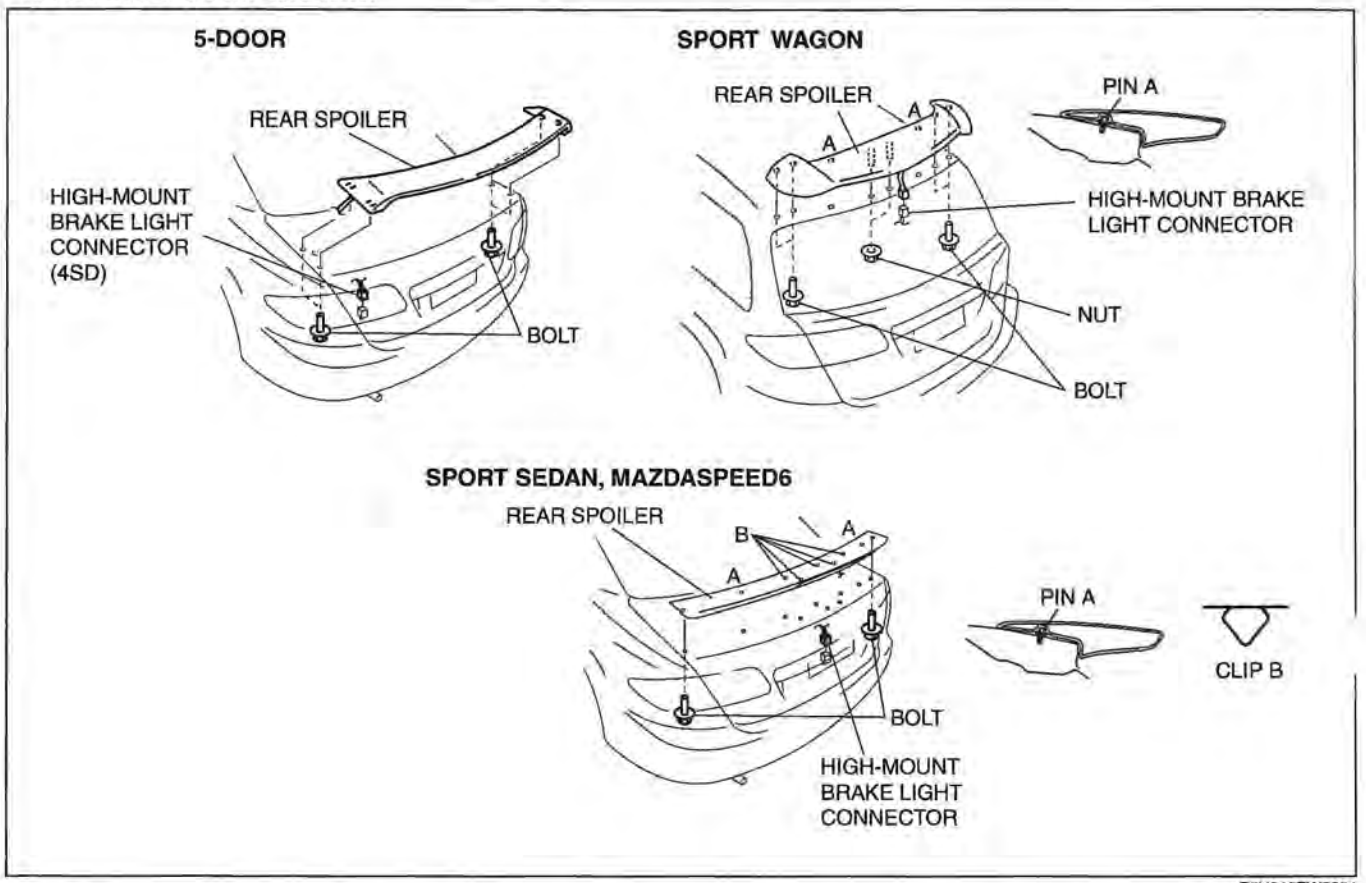

E6U916ZW5004

5. Disconnect the high-mount brake light connector. (Sport Sedan, Mazdaspeed6, Sport Wagon)
6. Remove the rear spoiler.
7. Install in the reverse order of removal.

ROOF CARRIER BRACKET REMOVAL/INSTALLATION [SPORT WAGON]

E6U091650710W07

1. Remove the following parts:
   (1) Microphone (vehicles with car-navigation system) (See 09–20–14 MICROPHONE REMOVAL/INSTALLATION.)
   (2) Sunroof seaming welt (vehicles with sunroof only)
   (3) A-pillar trims (See 09–17–10 A-PILLAR TRIM REMOVAL/INSTALLATION.)
   (4) Upper anchor of the front seat belt (See 08–11–3 FRONT SEAT BELT REMOVAL/INSTALLATION.)
   (5) Front scuff plate (See 09–17–11 FRONT SCUFF PLATE REMOVAL/INSTALLATION.)
   (6) Rear scuff plate (See 09–17–12 REAR SCUFF PLATE REMOVAL/INSTALLATION.)
   (7) B-pillar lower trims (See 09–17–10 B-PILLAR LOWER TRIM REMOVAL/INSTALLATION.)
   (8) B-pillar upper trims (See 09–17–11 B-PILLAR UPPER TRIM REMOVAL/INSTALLATION.)
   (9) C-pillar trims (See 09–17–14 C-PILLAR TRIM REMOVAL/INSTALLATION.)
   (10) D-pillar trims (Sport Wagon) (See 09–17–15 D-PILLAR TRIM REMOVAL/INSTALLATION [SPORT WAGON].)
   (11) Front and rear map lights (See 09–18–27 FRONT MAP LIGHT REMOVAL/INSTALLATION.) (See 09–18–28 REAR MAP LIGHT REMOVAL/INSTALLATION.)
   (12) Cargo compartment light (See 09–18–29 CARGO COMPARTMENT LIGHT REMOVAL/INSTALLATION [5-DOOR, SPORT WAGON].)
2. Disconnect the auto-dimming mirror connector. (vehicles with auto-dimming mirror only)

3. Remove the sunvisors. (See 09–17–25 SUNVISOR REMOVAL/INSTALLATION.)
4. Remove the assist handle. (See 09–17–26 ASSIST HANDLE REMOVAL/INSTALLATION.)
5. Remove the headliner. (See 09–17–24 HEADLINER REMOVAL/INSTALLATION.)
   Remove the nuts.
   Remove the roof carrier bracket.
8. Install in the reverse order of removal.

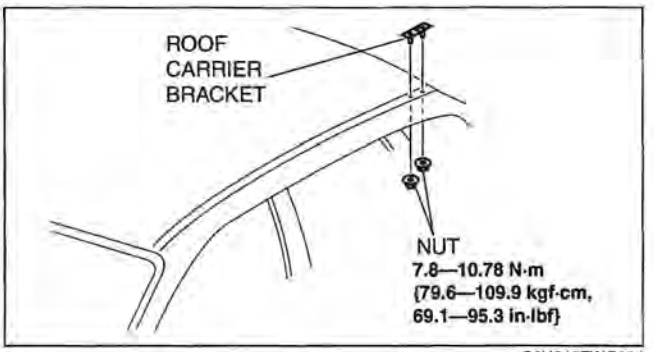

C6U916ZWC004

FRONT BELTLINE MOLDING REMOVAL

E6U091650641W01

Note
- When removing the front beltline molding, the clip may be damaged. If the clip is damaged, replace the front beltline molding with a new one.

1. Pull section A upward and remove the clip.
2. Rotate section B of the front beltline molding in direction (2), along the direction (1) shown in the figure, and remove it from the body.

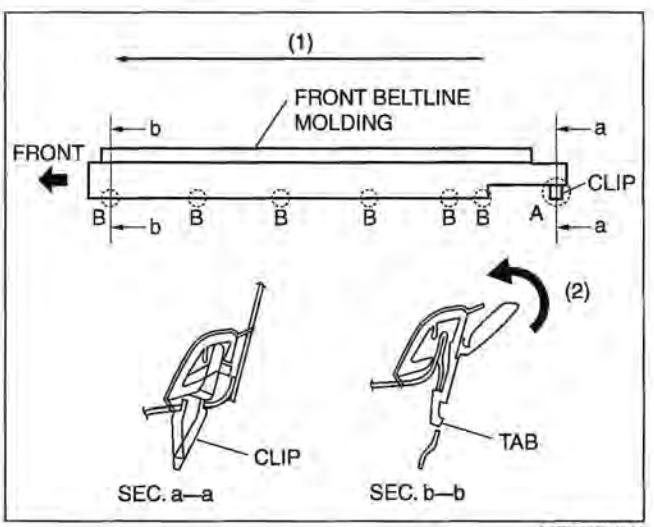

A6E7730W001

FRONT BELTLINE MOLDING INSTALLATION

E6U091650641W02

1. Press the clip into the body.
2. Press in section B of the front beltline molding along the direction (1) shown in the figure to attach it to the body.

Note
- If the front beltline molding is difficult to attach, apply soapy water.

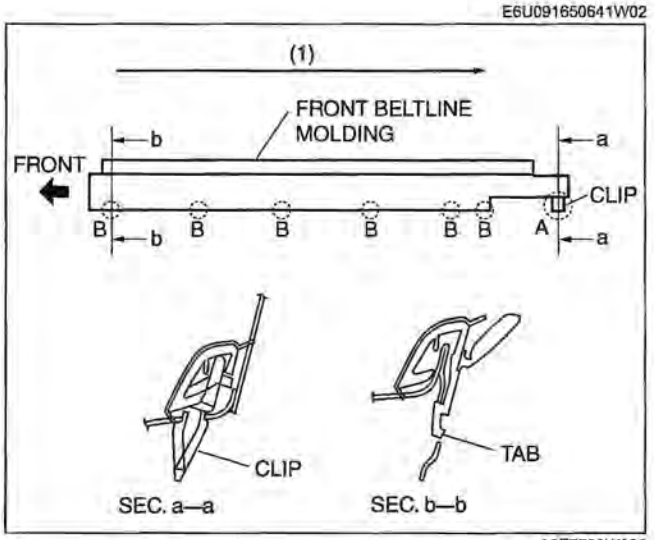

A6E7730W003

REAR BELTLINE MOLDING REMOVAL

E6U091650641W03

Note
- When removing the rear beltline molding, the clip may be damaged. If the clip is damaged, replace the rear beltline molding with a new one.

1. Pull section A upward and remove the clip.
2. Rotate section B of the rear beltline molding in direction (2), along the direction (1) shown in the figure and remove it from the body.
3. Pull section C upward and remove the clip. Then remove the rear beltline molding.

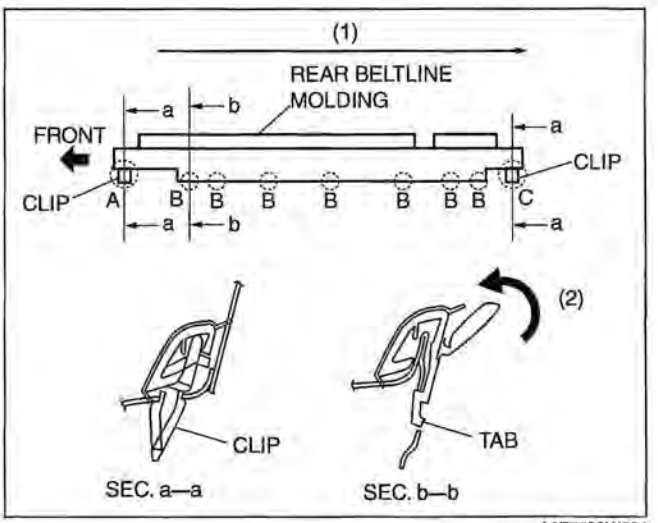

A6E7730W004

REAR BELTLINE MOLDING INSTALLATION

E6U091650641W04

1. Press the clip at section C into the body.
2. Press in section B of the rear beltline molding along the direction (1) to attach it to the body.
3. Press the clip at section A in and attach the rear beltline molding.

Note
- If the rear beltline molding is difficult to attach, apply soapy water.

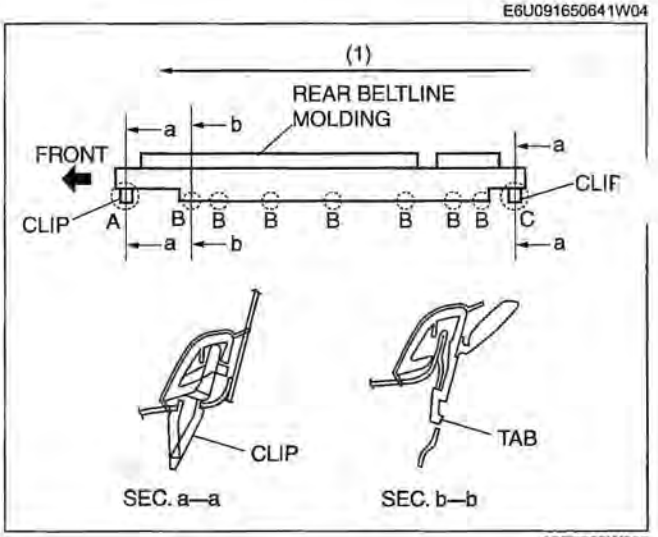

A6E7730W005

ROOF MOLDING REMOVAL

E6U091650641W05

1. Detach the T-stud which secure sections A of roof molding, using a screwdriver or equivalent tool.
2. While pulling the roof molding up, detach it from the clips at section B, and then remove the roof molding.

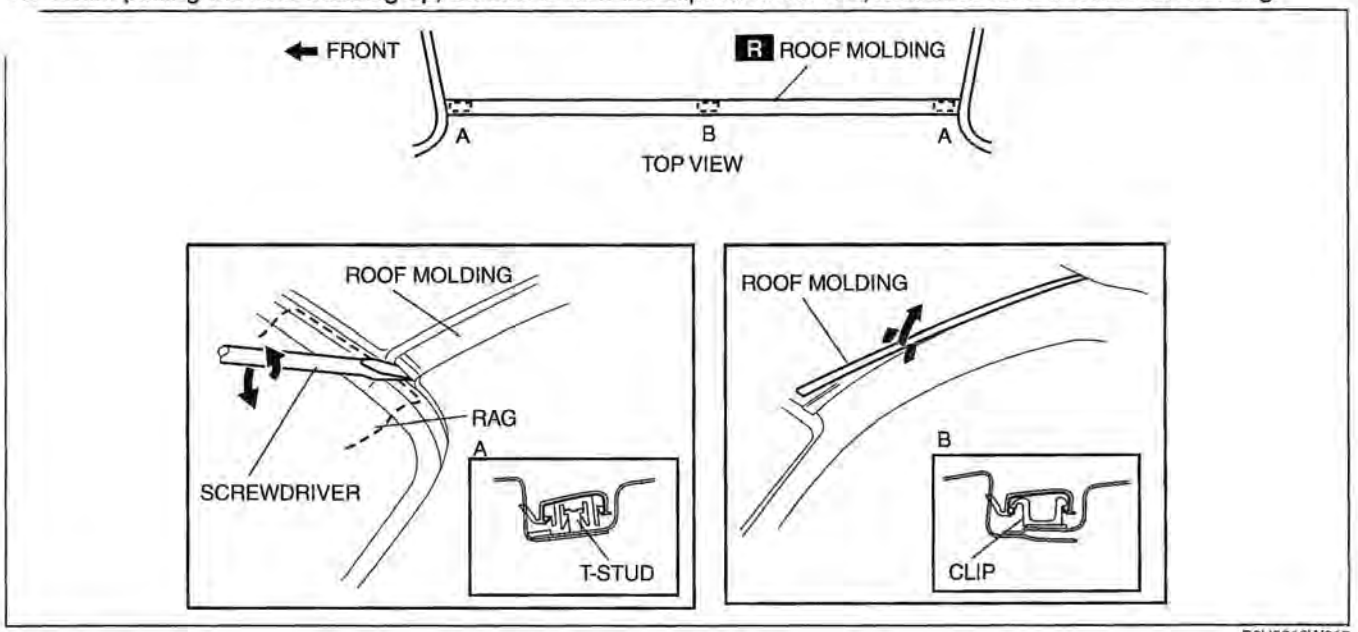

B6U0916W015

ROOF MOLDING INSTALLATION

E6U091650641W06

1. Follow the following procedure when installing a new clip.
   (1) Remove the faulty clip.
   (2) Clean and degrease the area of the roof panel where the clip will be affixed.
   (3) If the temperature is **less than 20 °C {68 °F}**, warm the clip installation surface to **20 °C—40 °C {68—104 °F}** using a hot air blower.
   (4) Peel off the backing of the double-sided adhesive tape of the clip.
   (5) Install the clip by pressing it on the vehicle.

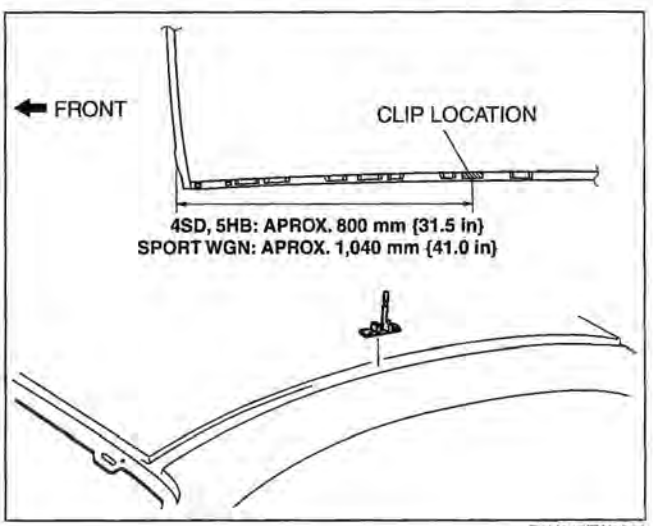

E6U916ZW5006

   (6) Remove section A of the clip.

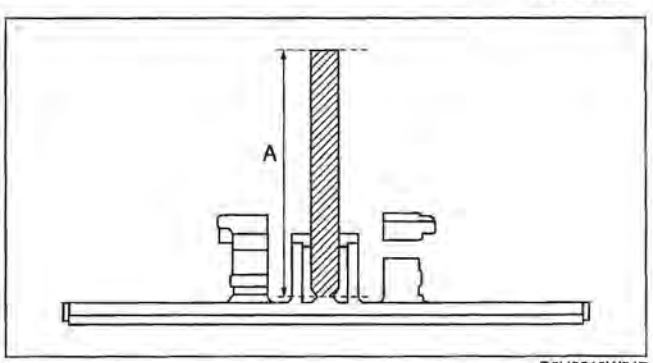

B6U0916W017

Vehicle with T-stud

1. Attach the roof molding to the T-stud at section A.

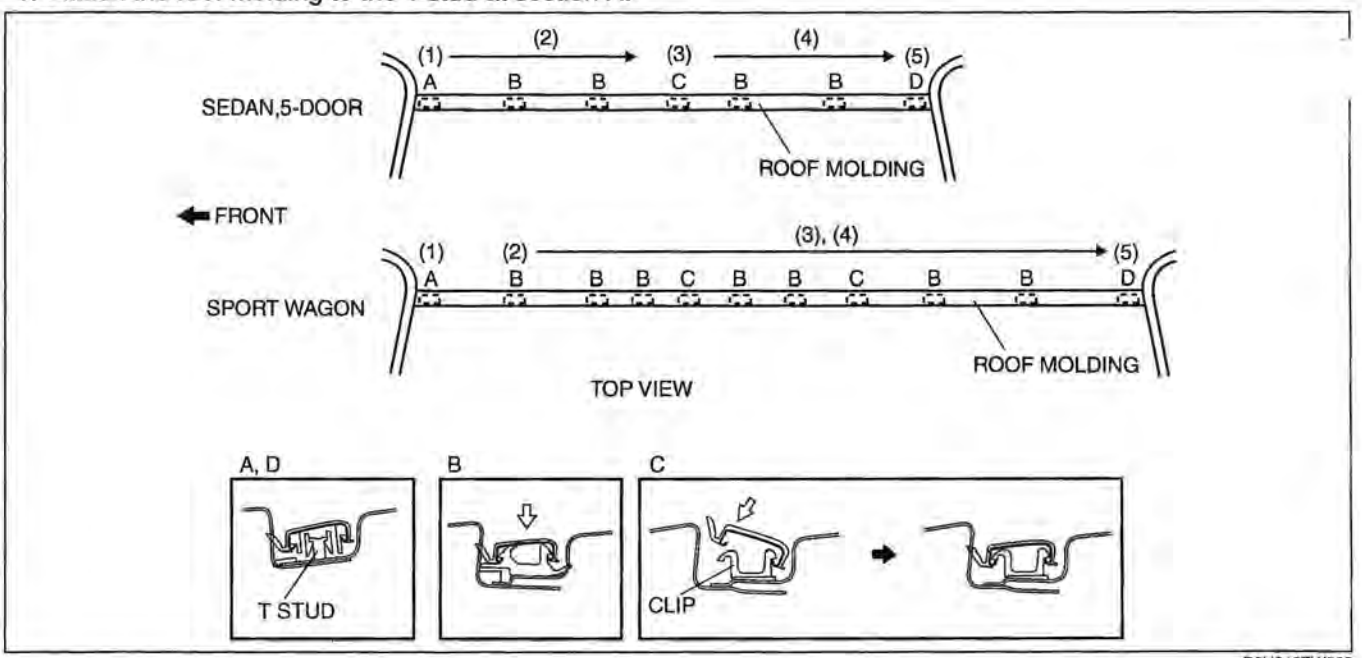

D6U916ZW005

2. Press in the roof molding following the arrows.
3. Hook the roof molding to the clip, and then press it in to attach the roof molding to the clip.
4. Press in the roof molding following the arrows.
5. Attach the roof molding to the T-stud at section D.

Vehicle without T-stud (When replacing roof panel)

1. Apply primer to the areas of the roof panel indicated in the figure.

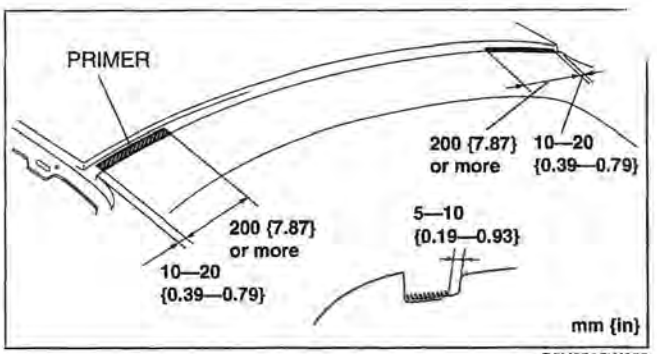

B6U0916W008

2. Cut the spring off of the front and rear ends of the roof molding.
3. Apply primer to the areas of the roof molding indicated in the figure.

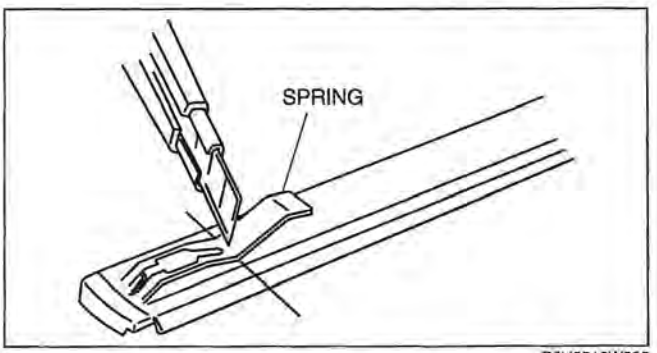

B6U0916W009

4. Apply sealant to the areas of the roof molding indicated in the figure.

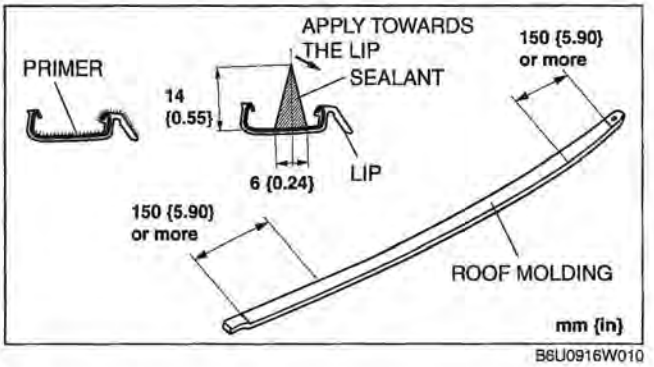

B6U0916W010

5. Install the roof molding to the clips as shown in the figure.

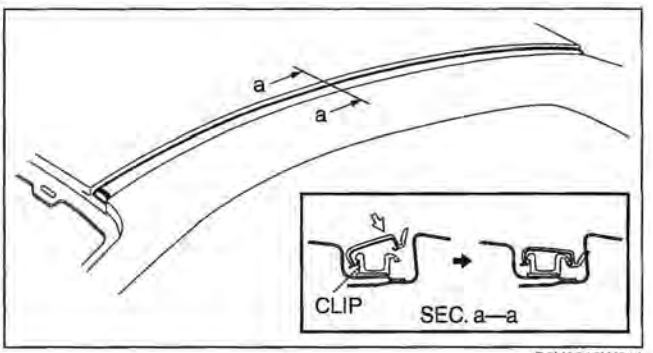

B6U0916W011

6. Use a plastic card (**10 mm {0.39 in}** width, **30 mm {1.18 in}** length) to adjust the front and rear gaps of the roof molding.

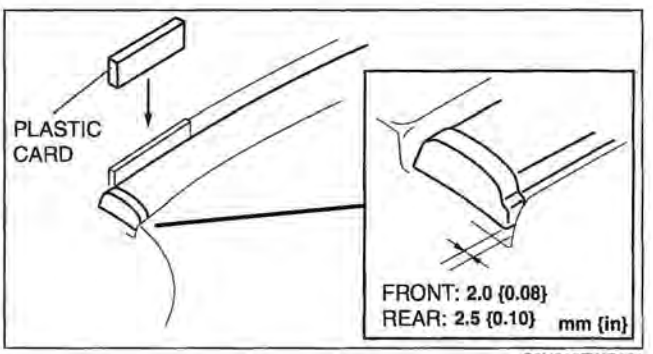

C6U916ZWC101

7. Secure the front and rear ends of the roof molding as shown in the figure.
8. After the adhesive material has hardened, remove the securing parts.

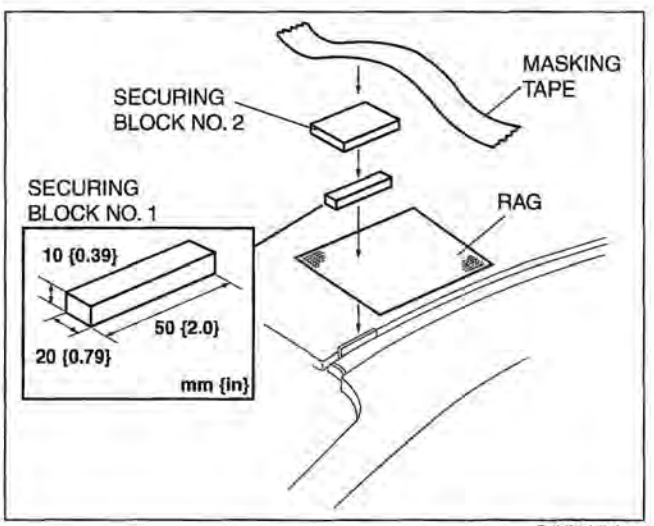

B6U0916W013

09–17 INTERIOR TRIM

LOCATION INDEX 09–17–2
DASHBOARD
REMOVAL/INSTALLATION 09–17–4
DASHBOARD
DISASSEMBLY/ASSEMBLY 09–17–5
SIDE PANEL
REMOVAL/INSTALLATION 09–17–6
COLUMN COVER
REMOVAL/INSTALLATION 09–17–6
METER HOOD
REMOVAL/INSTALLATION 09–17–6
INNER GARNISH
REMOVAL/INSTALLATION 09–17–7
LOWER PANEL
REMOVAL/INSTALLATION 09–17–7
CONSOLE
REMOVAL/INSTALLATION 09–17–8
CONSOLE
DISASSEMBLY/ASSEMBLY 09–17–9
CENTER BOX
REMOVAL/INSTALLATION 09–17–9
GLOVE COMPARTMENT
REMOVAL/INSTALLATION 09–17–9
A-PILLAR TRIM
REMOVAL/INSTALLATION 09–17–10
B-PILLAR LOWER TRIM
REMOVAL/INSTALLATION 09–17–10
B-PILLAR UPPER TRIM
REMOVAL/INSTALLATION 09–17–11
FRONT SIDE TRIM
REMOVAL/INSTALLATION 09–17–11
FRONT SCUFF PLATE
REMOVAL/INSTALLATION 09–17–11
REAR SCUFF PLATE
REMOVAL/INSTALLATION 09–17–12
FRONT DOOR TRIM
REMOVAL/INSTALLATION 09–17–12
Driver's Side 09–17–12
Passenger's Side 09–17–13
REAR DOOR TRIM
REMOVAL/INSTALLATION 09–17–13
C-PILLAR TRIM
REMOVAL/INSTALLATION 09–17–14
Sport Sedan 09–17–14
5-Door 09–17–14
Sport Wagon 09–17–15
D-PILLAR TRIM
REMOVAL/INSTALLATION
[SPORT WAGON] 09–17–15
TIRE HOUSE TRIM
REMOVAL/INSTALLATION 09–17–15
Sport Sedan 09–17–15
5-Door, Sport Wagon 09–17–16
REAR PACKAGE TRIM
REMOVAL/INSTALLATION
[SPORT SEDAN] 09–17–16
TRUNK SIDE TRIM
REMOVAL/INSTALLATION 09–17–17
Sport Sedan 09–17–17
5-Door 09–17–17
Spot Wagon 09–17–18
TRUNK SIDE UPPER TRIM
REMOVAL/INSTALLATION
[5-DOOR, SPORT WAGON] 09–17–18
5-Door 09–17–18
Sport Wagon 09–17–19
PARTITION BOARD
REMOVAL/INSTALLATION 09–17–19
TRUNK END TRIM
REMOVAL/INSTALLATION 09–17–19
Sport Sedan 09–17–19
5-Door 09–17–20
Sport Wagon 09–17–20
TRUNK LID TRIM
REMOVAL/INSTALLATION
[SPORT SEDAN] 09–17–20
LIFTGATE UPPER TRIM
REMOVAL/INSTALLATION
[5-DOOR, SPORT WAGON] 09–17–21
5-Door 09–17–21
Sport Wagon 09–17–21
LIFTGATE SIDE TRIM
REMOVAL/INSTALLATION
[5-DOOR, SPORT WAGON] 09–17–22
5-Door 09–17–22
Sport Wagon 09–17–22
LIFTGATE LOWER TRIM
REMOVAL/INSTALLATION
[5-DOOR, SPORT WAGON] 09–17–23
5-Door 09–17–23
Sport Wagon 09–17–23
HEADLINER
REMOVAL/INSTALLATION 09–17–24
SUNVISOR
REMOVAL/INSTALLATION 09–17–25
ASSIST HANDLE
REMOVAL/INSTALLATION 09–17–26
SHOCK ABSORBING PAD
REMOVAL/INSTALLATION 09–17–26
TONNEAU COVER ANCHOR
REMOVAL/INSTALLATION
[SPORT WAGON] 09–17–27
FLOOR COVERING
REMOVAL/INSTALLATION 09–17–27

LOCATION INDEX

E6U091755000W01

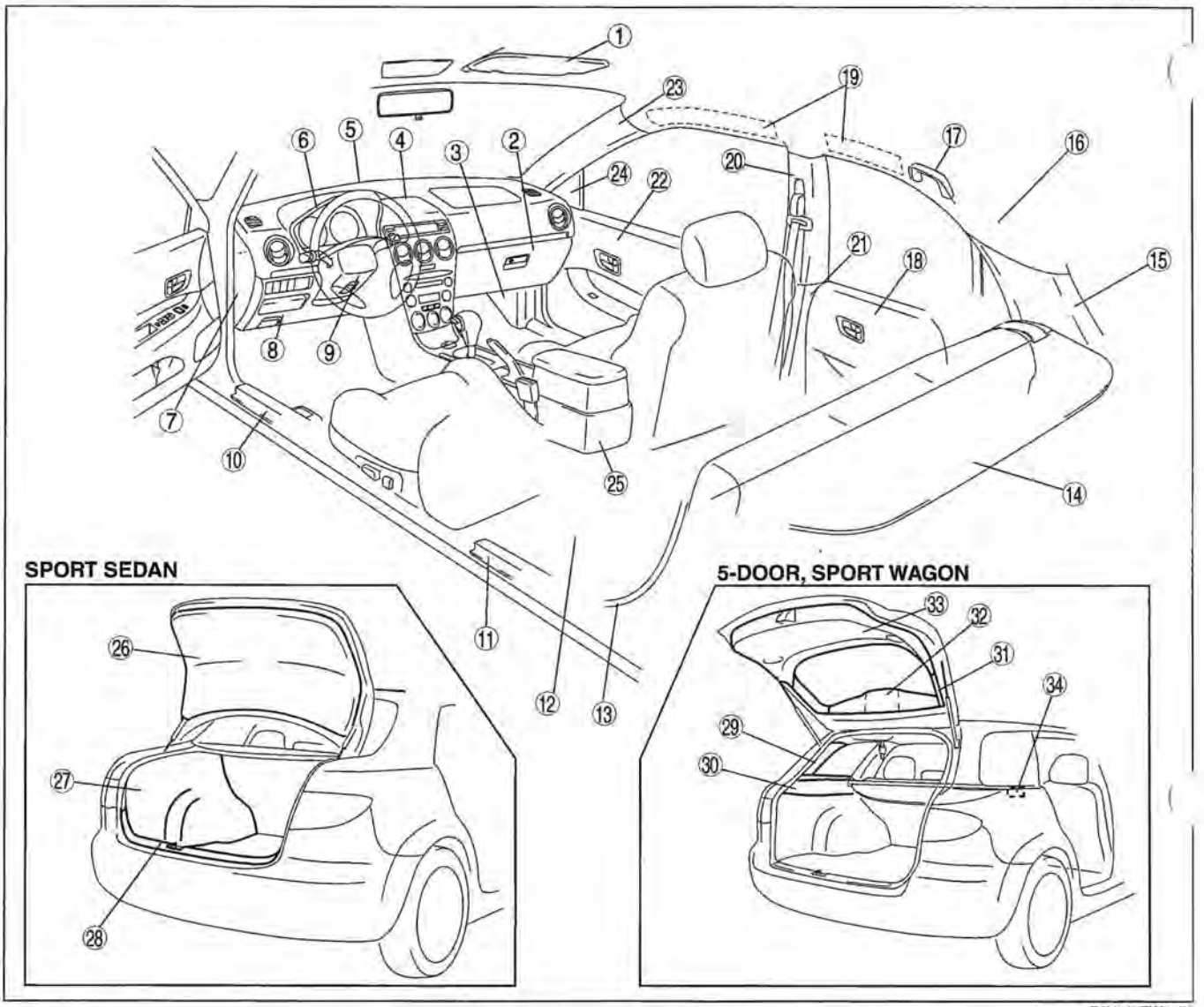

E6U917ZW5002

1	Sunvisor (See 09–17–25 SUNVISOR REMOVAL/ INSTALLATION)
2	Glove compartment (See 09–17–9 GLOVE COMPARTMENT REMOVAL/INSTALLATION)
3	Front side trim (See 09–17–11 FRONT SIDE TRIM REMOVAL/ INSTALLATION)
4	Center box (See 09–17–9 CENTER BOX REMOVAL/ INSTALLATION)
5	Dashboard (See 09–17–4 DASHBOARD REMOVAL/ INSTALLATION) (See 09–17–5 DASHBOARD DISASSEMBLY/ ASSEMBLY)
6	Meter hood (See 09–17–6 METER HOOD REMOVAL/ INSTALLATION)
7	Side panel (See 09–17–6 SIDE PANEL REMOVAL/ INSTALLATION)

8	Lower panel (See 09–17–7 LOWER PANEL REMOVAL/ INSTALLATION)
9	Column cover (See 09–17–6 COLUMN COVER REMOVAL/ INSTALLATION)
10	Front scuff plate (See 09–17–11 FRONT SCUFF PLATE REMOVAL/ INSTALLATION)
11	Rear scuff plate (See 09–17–12 REAR SCUFF PLATE REMOVAL/ INSTALLATION)
12	Floor covering (See 09–17–27 FLOOR COVERING REMOVAL/ INSTALLATION)
13	Tire house trim (See 09–17–15 TIRE HOUSE TRIM REMOVAL/ INSTALLATION)
14	Rear package trim (Sport Sedan) (See 09–17–16 REAR PACKAGE TRIM REMOVAL/ INSTALLATION [SPORT SEDAN])

15	C-pillar trim (See 09–17–14 C-PILLAR TRIM REMOVAL/ INSTALLATION)
6	Headliner (See 09–17–24 HEADLINER REMOVAL/ INSTALLATION)
17	Assist handle (See 09–17–26 ASSIST HANDLE REMOVAL/ INSTALLATION)
18	Rear door trim (See 09–17–13 REAR DOOR TRIM REMOVAL/ INSTALLATION)
19	Shock absorbing pad (See 09–17–26 SHOCK ABSORBING PAD REMOVAL/INSTALLATION)
20	B-pillar upper trim (See 09–17–11 B-PILLAR UPPER TRIM REMOVAL/INSTALLATION)
21	B-pillar lower trim (See 09–17–10 B-PILLAR LOWER TRIM REMOVAL/INSTALLATION)
22	Front door trim (See 09–17–12 FRONT DOOR TRIM REMOVAL/ INSTALLATION)
23	A-pillar trim (See 09–17–10 A-PILLAR TRIM REMOVAL/ INSTALLATION)
24	Inner garnish (See 09–17–7 INNER GARNISH REMOVAL/ INSTALLATION)
25	Console (See 09–17–8 CONSOLE REMOVAL/ INSTALLATION) (See 09–17–9 CONSOLE DISASSEMBLY/ ASSEMBLY)

26	Trunk lid trim (See 09–17–20 TRUNK LID TRIM REMOVAL/ INSTALLATION [SPORT SEDAN])
27	Trunk side trim (See 09–17–17 TRUNK SIDE TRIM REMOVAL/ INSTALLATION)
28	Trunk end trim (See 09–17–19 TRUNK END TRIM REMOVAL/ INSTALLATION)
29	D-pillar trim (Sport Wagon) (See 09–17–15 D-PILLAR TRIM REMOVAL/ INSTALLATION [SPORT WAGON])
30	Trunk side upper trim (5-Door, Sport Wagon) (See 09–17–18 TRUNK SIDE UPPER TRIM REMOVAL/INSTALLATION [5-DOOR, SPORT WAGON])
31	Liftgate side trim (5-Door, Sport Wagon) (See 09–17–22 LIFTGATE SIDE TRIM REMOVAL/INSTALLATION [5-DOOR, SPORT WAGON])
32	Liftgate upper trim (5-Door, Sport Wagon) (See 09–17–21 LIFTGATE UPPER TRIM REMOVAL/INSTALLATION [5-DOOR, SPORT WAGON])
33	Liftgate lower trim (5-Door, Sport Wagon) (See 09–17–23 LIFTGATE LOWER TRIM REMOVAL/INSTALLATION [5-DOOR, SPORT WAGON])
34	Tonneau cover anchor (Sport Wagon) (See 09–17–27 TONNEAU COVER ANCHOR REMOVAL/INSTALLATION [SPORT WAGON])

DASHBOARD REMOVAL/INSTALLATION

E6U091755000W02

1. Disconnect the negative battery cable.
2. Remove the following parts:
   (1) Glove compartment (See 09–17–9 GLOVE COMPARTMENT REMOVAL/INSTALLATION.)
   (2) Console (See 09–17–8 CONSOLE REMOVAL/INSTALLATION.)
   (3) Meter hood (See 09–17–6 METER HOOD REMOVAL/INSTALLATION.)
   (4) Instrument cluster (See 09–22–3 INSTRUMENT CLUSTER REMOVAL/INSTALLATION.)
   (5) Column cover (See 09–17–6 COLUMN COVER REMOVAL/INSTALLATION.)
   (6) Driver-side air bag module (See 08–10–6 DRIVER-SIDE AIR BAG MODULE REMOVAL/INSTALLATION.)
   (7) Steering wheel (See 06–12–7 STEERING WHEEL AND COLUMN REMOVAL/INSTALLATION.)
   (8) Combination switch (See 09–18–19 COMBINATION SWITCH REMOVAL/INSTALLATION.)
   (9) Lower panel (See 09–17–7 LOWER PANEL REMOVAL/INSTALLATION.)
   (10) Steering shaft (See 06–12–7 STEERING WHEEL AND COLUMN REMOVAL/INSTALLATION.)
   (11) A-pillar trims (See 09–17–10 A-PILLAR TRIM REMOVAL/INSTALLATION.)
   (12) Front scuff plates (See 09–17–11 FRONT SCUFF PLATE REMOVAL/INSTALLATION.)
   (13) Front side trims (See 09–17–11 FRONT SIDE TRIM REMOVAL/INSTALLATION.)
   (14) Side panels (See 09–17–6 SIDE PANEL REMOVAL/INSTALLATION.)
3. For vehicles equipped with the wire-type climate control unit, disconnect the wires for the front A/C unit. (See 07–40–30 CLIMATE CONTROL UNIT REMOVAL [L3, AJ].) (See 07–40–30 CLIMATE CONTROL UNIT INSTALLATION [L3, AJ].) (See 07–40–31 CLIMATE CONTROL UNIT REMOVAL/INSTALLATION [L3 WITH TC].)
4. Disconnect the dashboard harness connectors.
5. Remove the bolts.

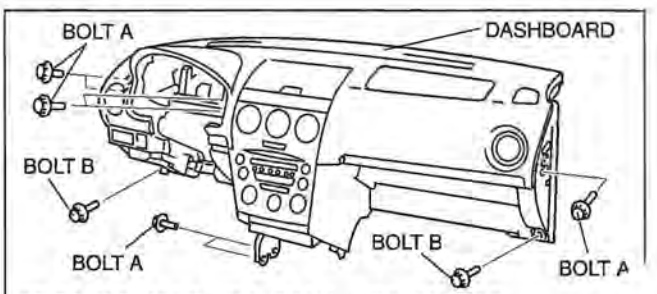

BOLT A: **18.6—25.5 N·m {1.9—2.6 kgf·m, 13.2—18.8 ft·lbf}**
BOLT B: **2.1—2.9 N·m {21—30 kgf·cm, 19—26 in·lbf}**

C6U0917W121

6. Pull out the support pins from the body to remove the dashboard.

   Warning
   - **Removing the dashboard without supporting it can be dangerous. The dashboard may fall and injure you. Always perform these procedures together with at least another person.**

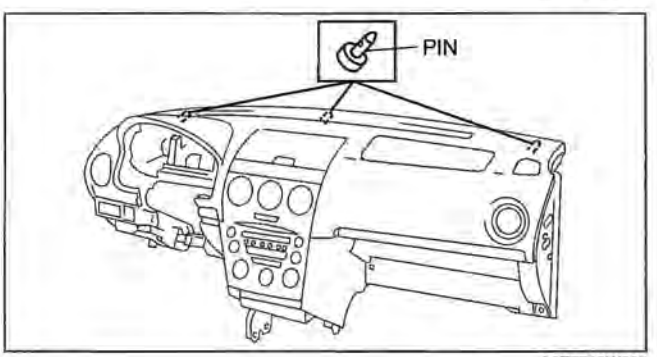

A6E7742W005

7. Take the dashboard off from the driver-side door opening.
8. Install in the reverse order of removal.

DASHBOARD DISASSEMBLY/ASSEMBLY

E6U091755000W03

1. Remove the following parts:
   (1) Passenger-side air bag module (See 08–10–7 PASSENGER-SIDE AIR BAG MODULE REMOVAL/INSTALLATION.)
   (2) Ventilator grilles
   (3) Center panel unit (See 09–20–4 CENTER PANEL UNIT REMOVAL/INSTALLATION.)
   (4) LCD unit (vehicles with car-navigation system) (See 09–20–6 LCD UNIT REMOVAL/INSTALLATION.)
   (5) Center box (vehicles without car-navigation system) (See 09–17–9 CENTER BOX REMOVAL/INSTALLATION.)
   (6) Climate control unit (See 07–40–30 CLIMATE CONTROL UNIT REMOVAL [L3, AJ].) (See 07–40–31 CLIMATE CONTROL UNIT REMOVAL/INSTALLATION [L3 WITH TC].)
2. Disassemble in the order indicated in the table.
3. Assemble in the reverse order of disassembly.

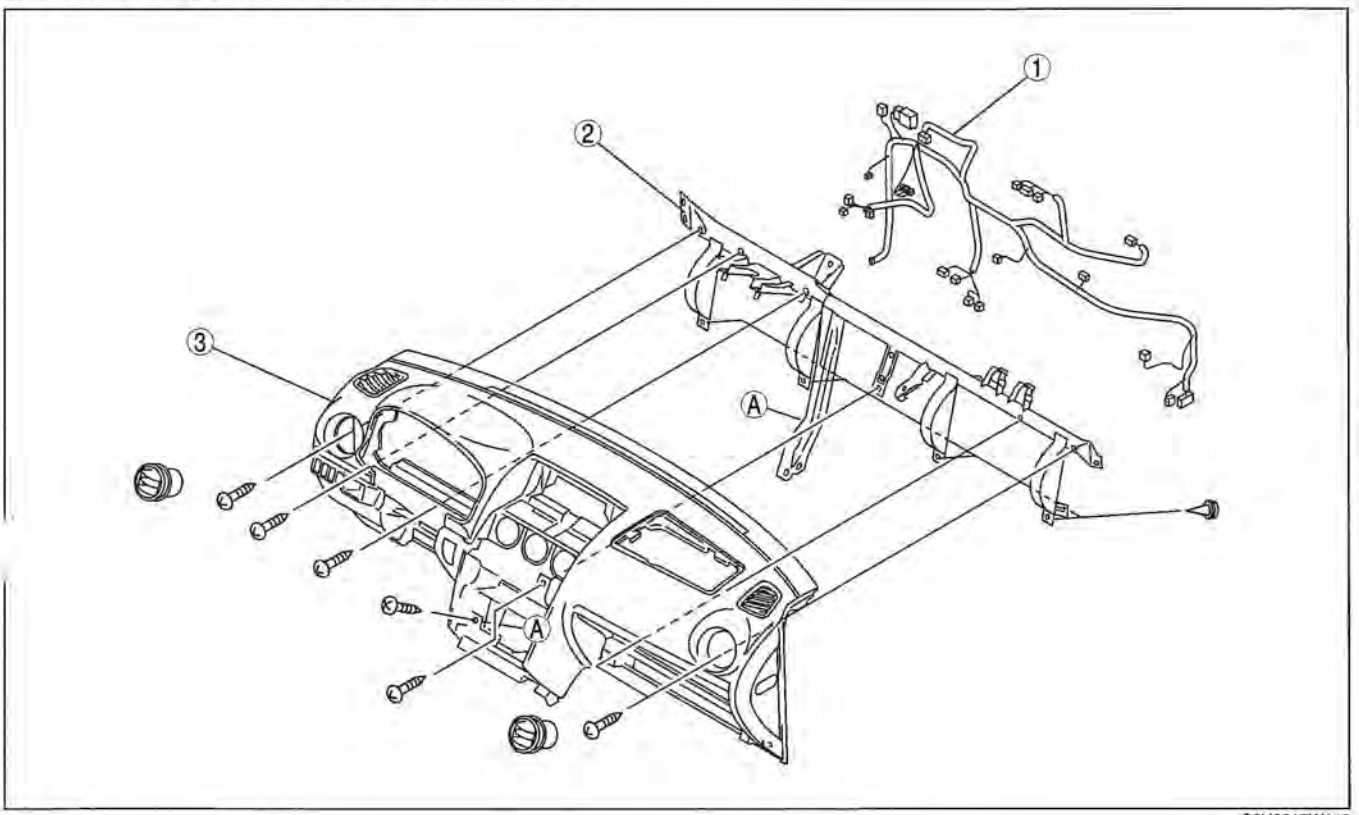

C6U0917W119

1	Dashboard wiring harness
2	Dashboard member
3	Dashboard

SIDE PANEL REMOVAL/INSTALLATION

1. Disengage clips using a tape-wrapped flathead screwdriver.
2. Pull the side panel outward, then disengage tabs from dashboard, and remove the side panel.
3. Install in the reverse order of removal.

E6U091755000W04

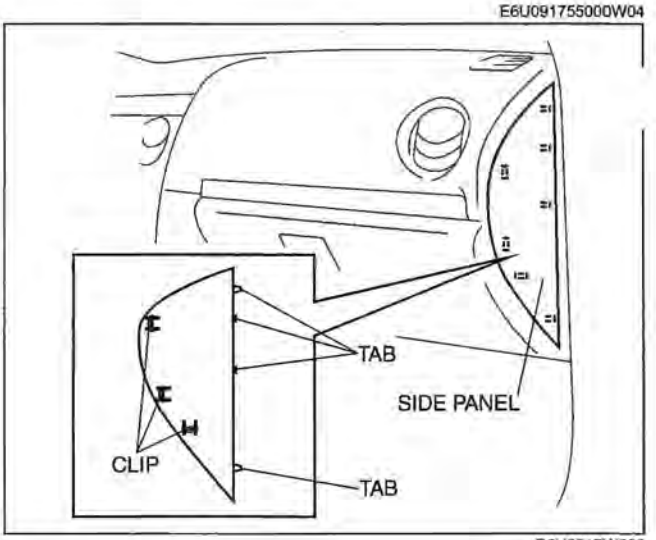

B6U0917W003

COLUMN COVER REMOVAL/INSTALLATION

1. Detach the fitting parts of the upper column cover from the meter hood rubber.
2. Remove the upper column cover.
3. Remove the screws.
4. Remove the lower column cover.
5. Remove the ignition key illumination.
6. Install in the reverse order of removal.

E6U091755000W05

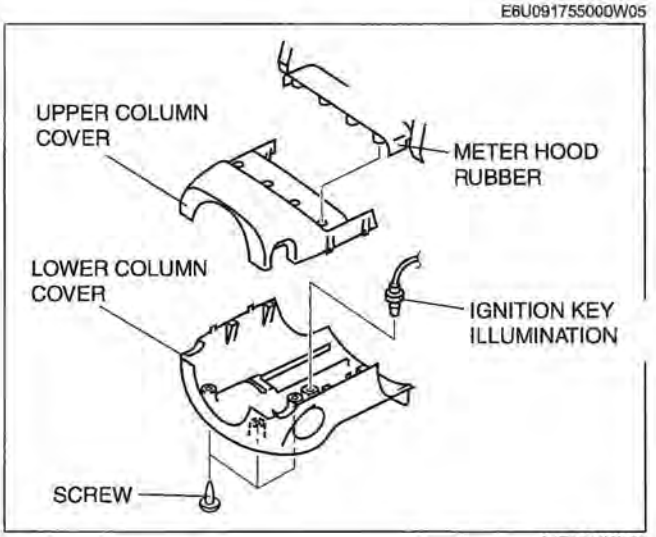

A6E7742W008

METER HOOD REMOVAL/INSTALLATION

1. Remove the screws.
2. Pull the meter hood outward, then detach the column cover.
3. Install in the reverse order of removal.

E6U091755000W06

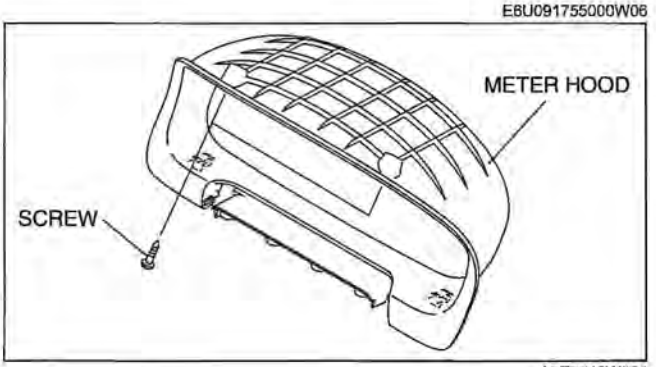

A6E7742W002

INNER GARNISH REMOVAL/INSTALLATION

E6U091755000W10

1. Disconnect the negative battery cable.
2. Pull the inner garnish outward and detach clips A and pins B.
3. Remove the inner garnish.
4. Disconnect the front tweeter connector.
5. Install in the reverse order of removal.

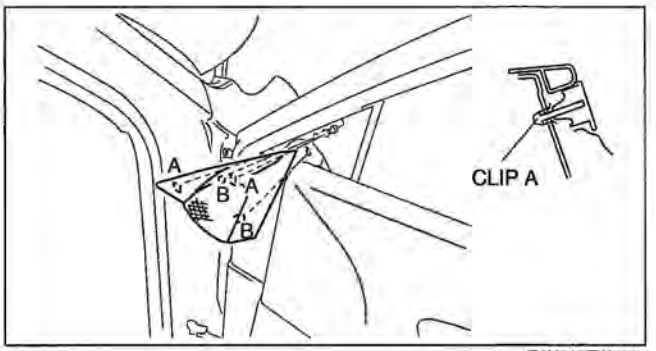

E6U917ZW5007

LOWER PANEL REMOVAL/INSTALLATION

E6U091755000W07

1. Remove the hood release lever. (See 09–10–3 HOOD REMOVAL/INSTALLATION [EXCEPT L3 WITH TC].) (See 09–10–4 HOOD REMOVAL/INSTALLATION [L3 WITH TC].)
2. Remove the screws.
3. Pull the lower panel outward, disengage clips A and tabs B from the dashboard, and remove the lower panel.
4. Install in the reverse order of removal.

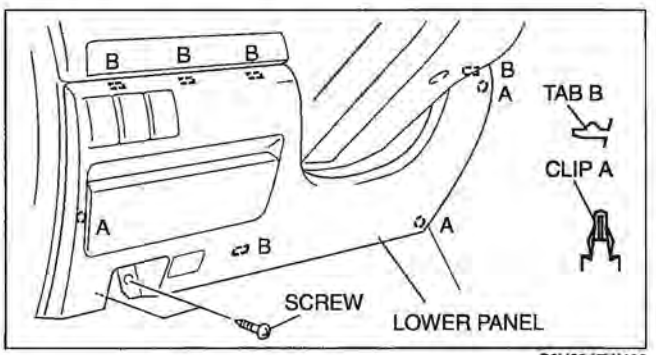

C6U0917W108

CONSOLE REMOVAL/INSTALLATION

E6U091764270W01

1. Disconnect the negative battery cable.
2. For MTX vehicle, remove the shift lever knob.
3. Remove the panel No.1 using a tape-wrapped screwdriver.

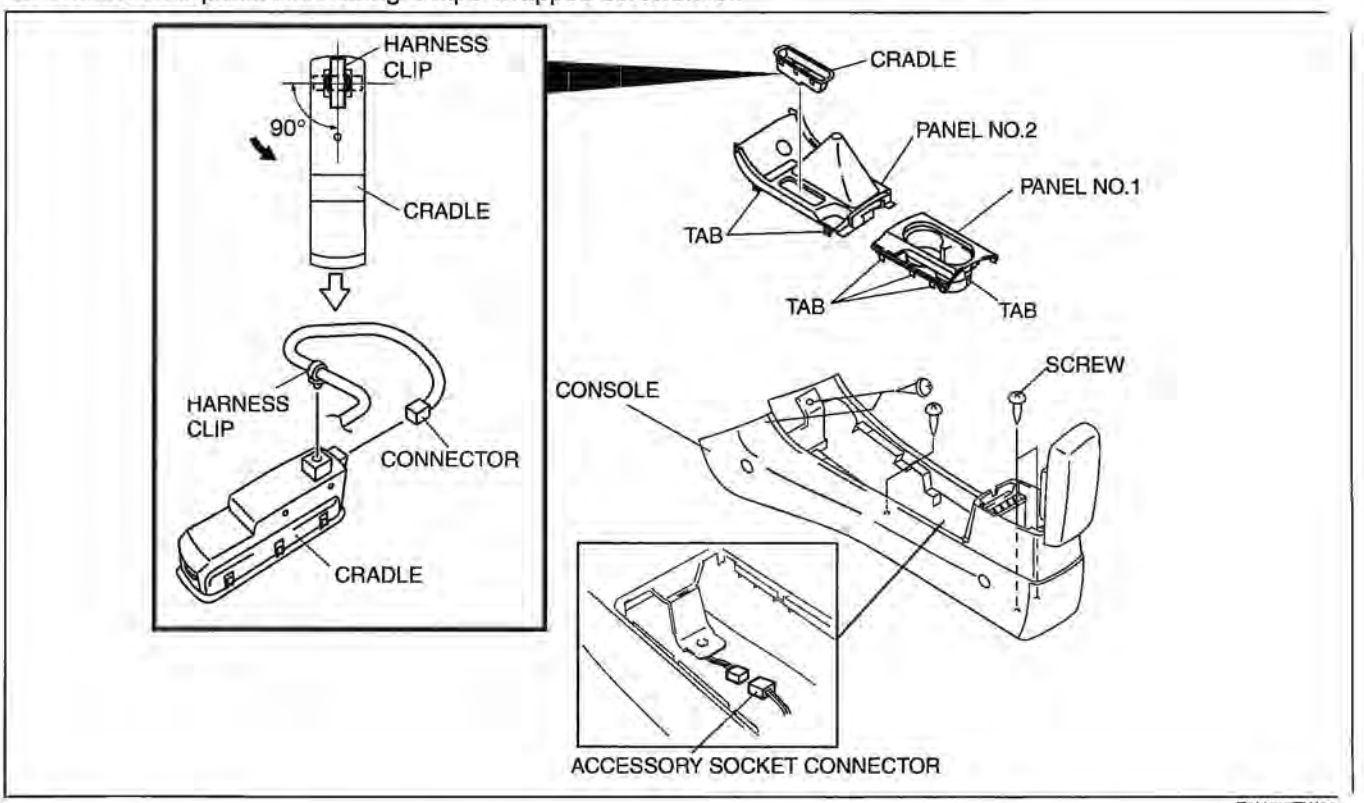

E6U917ZW5

4. Remove the panel No.2 using a tape-wrapped screwdriver, disconnect the cigarette lighter connector, and remove the front ashtray illumination.
5. Rotate the wiring harness clip installed on the cradle 90° in the direction indicated by the arrow in the figure and pull it out. (with car-navigation system)
6. Disconnect the cradle connector.
7. Remove the screws.
8. Remove the seat warmer switch. (See 09–13–29 SEAT WARMER SWITCH REMOVAL/INSTALLATION.)
9. Disconnect the accessory socket connector.
10. Remove the console.
11. Install in the reverse order of removal.

CONSOLE DISASSEMBLY/ASSEMBLY

1. Disassemble in the order indicated in the table.

1	Console lid
2	Cover
3	Box
4	Bracket
5	Console
6	Boot (only MTX vehicle)
7	Panel No.2
8	Cup holder
9	Panel No.1

2. Assemble in the reverse order of disassembly.

E6U091764270W02

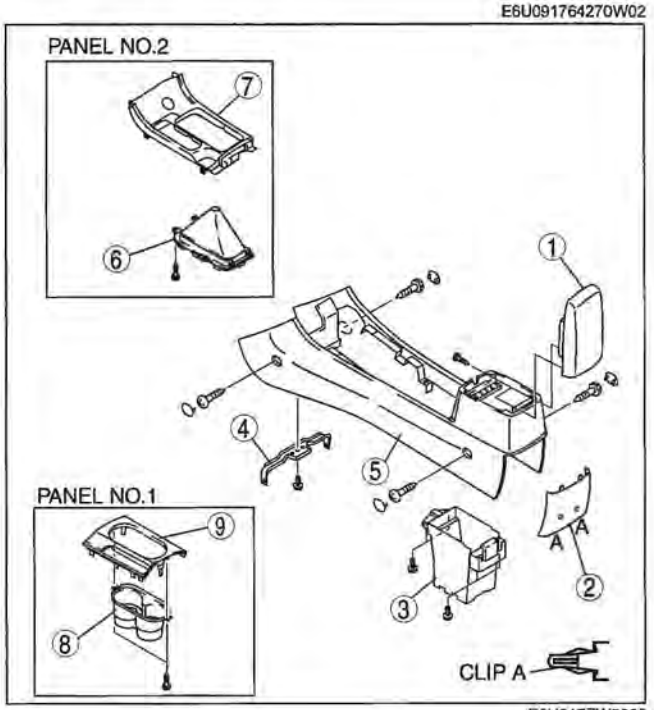

E6U917ZW5000

CENTER BOX REMOVAL/INSTALLATION

E6U091755000W08

1. Disconnect the negative battery cable.
2. Remove the center panel unit. (See 09–20–4 CENTER PANEL UNIT REMOVAL/INSTALLATION.)
3. Remove the screws.
4. Pull the center box outward, then disengage the tabs.
5. Disconnect the information display connector.
6. Install in the reverse order of removal.

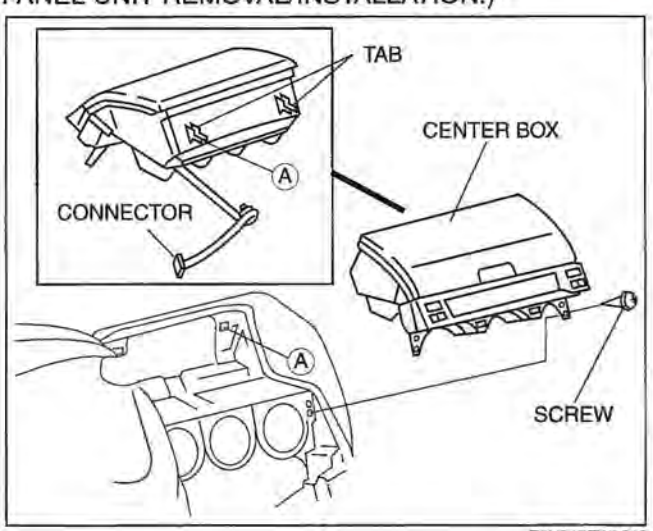

E6U917ZW5010

GLOVE COMPARTMENT REMOVAL/INSTALLATION

E6U091755000W09

1. Remove the damper clip.
2. Bend the stoppers inward to remove.

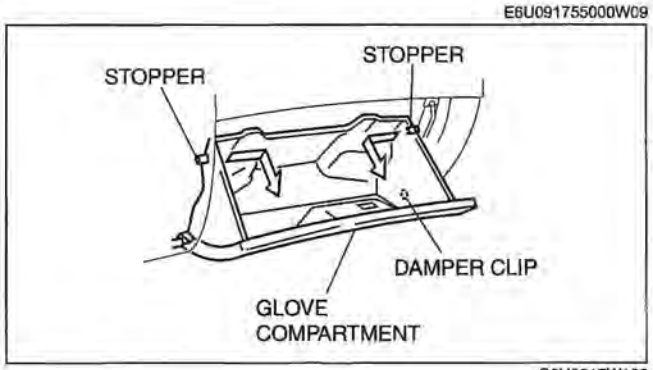

C6U0917W103

3. Open the glove compartment lid until it is completely horizontal and remove the clips by pulling them in the direction of the arrow.
4. Remove the glove compartment.
5. Install in the reverse order of removal.

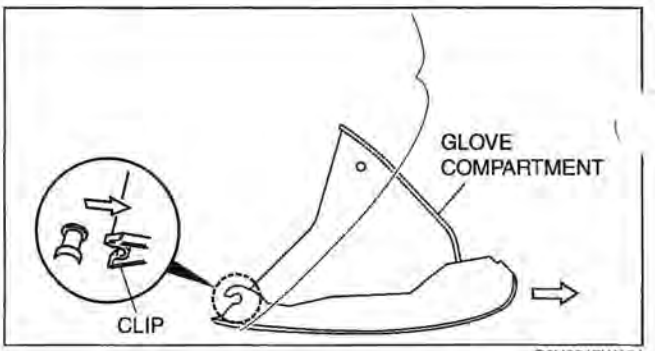

C6U0917W104

A-PILLAR TRIM REMOVAL/INSTALLATION

E6U091768150W01

1. Partially peel back the seaming welt.
2. Pull the A-pillar trim, then disengage clips A.
3. Pull the A-pillar trim, then disengage clip B (1).
4. Pull the A-pillar trim upward, then disengage clip B from the A-pillar trim (2).
5. Disengage the tabs from the dashboard, then remove the A-pillar trim.

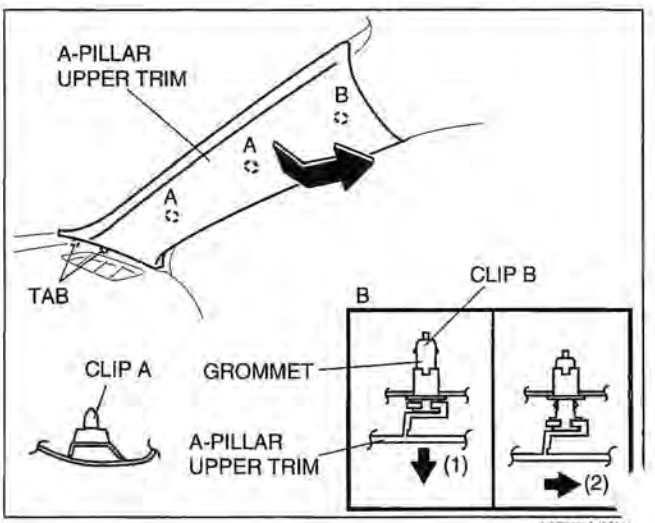

A6E7744W02

6. Pull clip B out, then rotate 45°.
7. Remove clip B from the grommet by pulling it outward.
8. Install in the reverse order of removal.

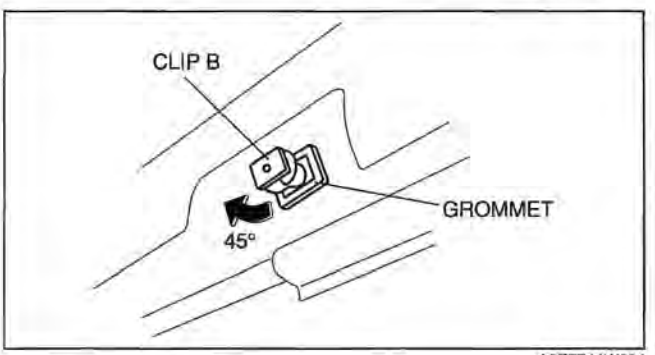

A6E7744W024

B-PILLAR LOWER TRIM REMOVAL/INSTALLATION

E6U091768150W02

1. Remove the front scuff plate. (See 09–17–11 FRONT SCUFF PLATE REMOVAL/INSTALLATION.)
2. Remove the rear scuff plate. (See 09–17–12 REAR SCUFF PLATE REMOVAL/INSTALLATION.)
3. Pull the area marked A, then remove one side of the B-pillar lower trim.
4. Pull the B-pillar lower trim, then remove the pin from the body.
5. Remove the B-pillar lower trim.
6. Install in the reverse order of removal.

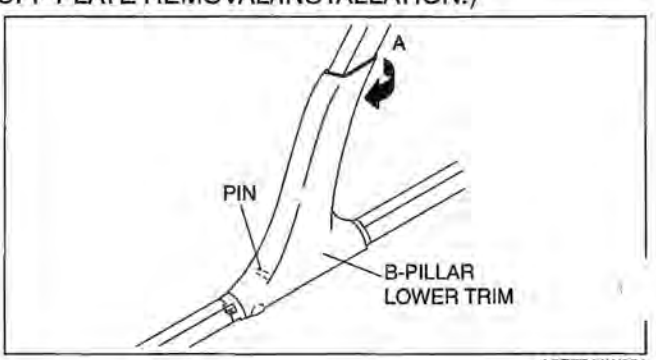

A6E7744W021

B-PILLAR UPPER TRIM REMOVAL/INSTALLATION

E6U091768150W03

1. Remove the following parts:
   (1) Remove the upper anchor of the front seat belt. (See 08–11–3 FRONT SEAT BELT REMOVAL/INSTALLATION.)
   (2) Front scuff plate (See 09–17–11 FRONT SCUFF PLATE REMOVAL/INSTALLATION.)
   (3) Rear scuff plate (See 09–17–12 REAR SCUFF PLATE REMOVAL/INSTALLATION.)
   (4) B-pillar lower trim (See 09–17–10 B-PILLAR LOWER TRIM REMOVAL/INSTALLATION.)
2. Partially peel back the seaming welt.
3. Pull the B-pillar upper trim outward, then disengage clip B and pin C from the body.
4. Disengage tab A from the body, then remove B-pillar upper trim.
5. Install in the reverse order of removal.

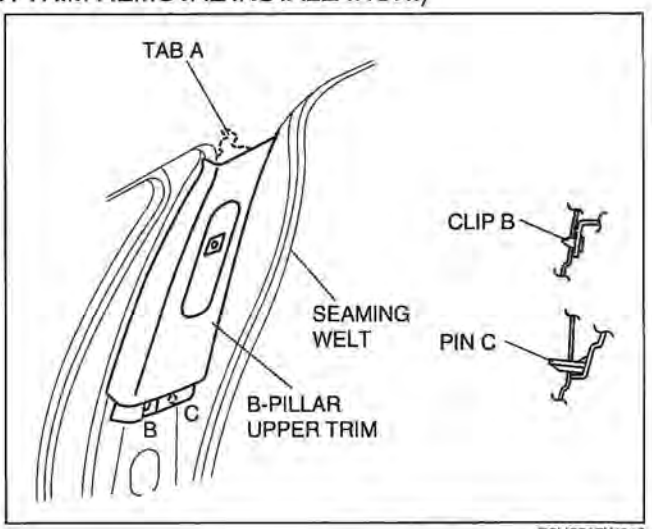

B6U0917W010

FRONT SIDE TRIM REMOVAL/INSTALLATION

E6U091768370W01

1. Remove the front scuff plate. (See 09–17–11 FRONT SCUFF PLATE REMOVAL/INSTALLATION.)
2. Partially peel back the seaming welt.
3. Pull the front side trim outward, disengage clip A and the stud bolt, then remove the front side trim. Install in the reverse order of removal.

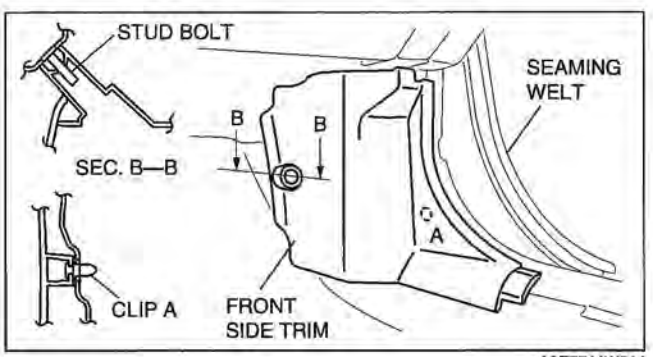

A6E7744W014

FRONT SCUFF PLATE REMOVAL/INSTALLATION

E6U091767870W01

1. Pull the front scuff plate upward, disengage clips B, pins C, D and tabs E from the body, and remove the front scuff plate.
2. Install in the reverse order of removal.

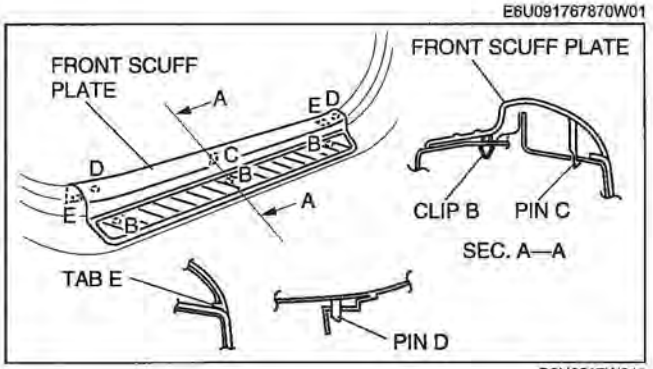

B6U0917W011

REAR SCUFF PLATE REMOVAL/INSTALLATION

1. Pull the rear scuff plate upward, then disengage clips A, pins B, and tabs C from the body, and remove the rear scuff plate.
2. Install in the reverse order of removal.

E6U091767870W02

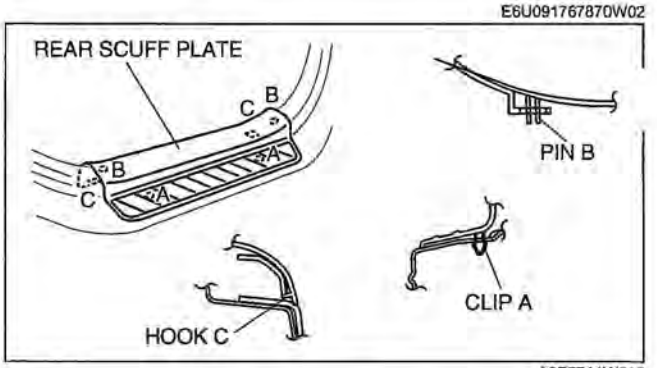

A6E7744W018

FRONT DOOR TRIM REMOVAL/INSTALLATION

Driver's Side

E6U091768400W01

1. Disconnect the negative battery cable.
2. Open the cap using a small screwdriver, then remove the screw.
3. Remove the inner handle cover.
4. Disconnect the door lock switch connector.
5. Remove the inner garnish.

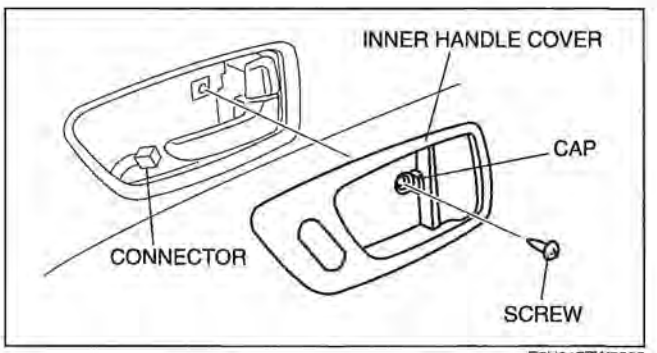

E6U917ZW5003

6. Remove the cover, then remove screw A.
7. Remove the lens cover, then remove screw.
8. Disengage clips A from the front door using a fastener remover.
9. Pull the front door trim upward, then disengage tabs B from the front door.
10. Disconnect the power door mirror switch connector and the power window main switch connector.
11. Remove the courtesy light.
12. Remove the front door trim.
13. Remove the switch panel from the front door trim.
14. Install in the reverse order of removal.

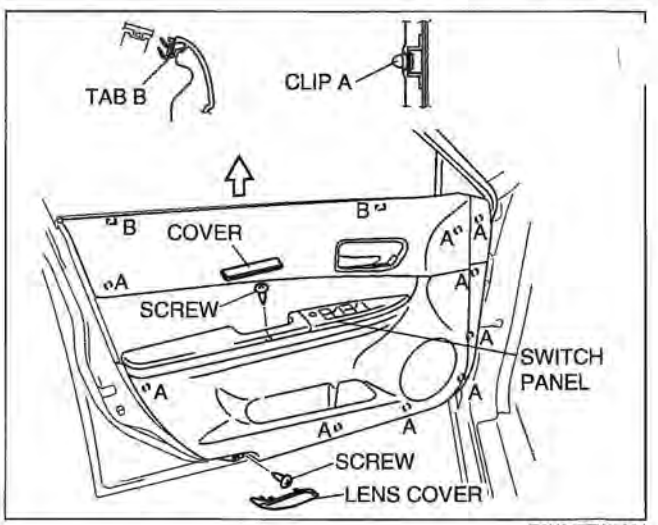

E6U917ZW5004

Passenger's Side

1. Disconnect the negative battery cable.
2. Remove the inner garnish. (See 09–17–7 INNER GARNISH REMOVAL/INSTALLATION.)
3. Open the cap using a small screwdriver, then remove the screw.
4. Remove the inner handle cover.
5. Disconnect the door lock switch connector.

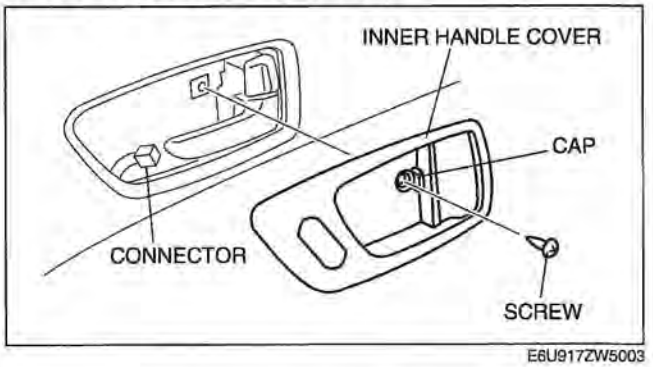

E6U917ZW5003

6. Remove the cover, then remove screw A.
7. Remove the lens cover, then remove screw.
8. Disengage clips A from the front door using a fastener remover.
9. Pull the front door trim upward, then disengage tabs B from the front door.
10. Disconnect the power window subswitch connector.
11. Remove the courtesy light.
12. Remove the front door trim.
13. Remove the switch panel from the front door trim.
14. Install in the reverse order of removal.

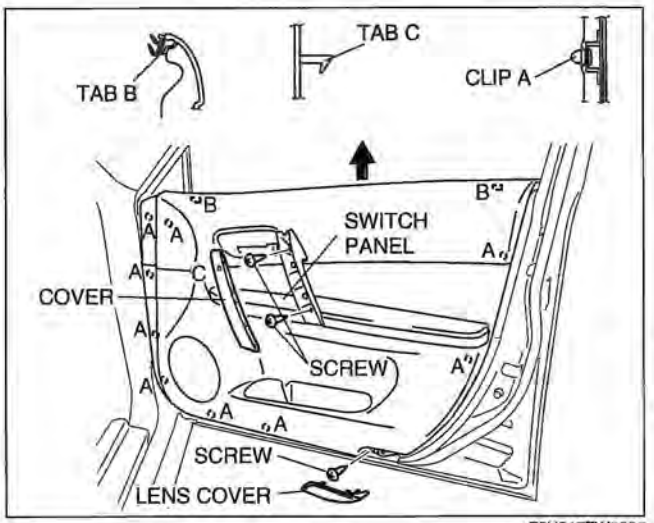

E6U917ZW5005

REAR DOOR TRIM REMOVAL/INSTALLATION

E6U091768400W02

1. Disconnect the negative battery cable.
2. Open the cap using a small screwdriver, then remove the screw.
3. Remove the inner handle cover.

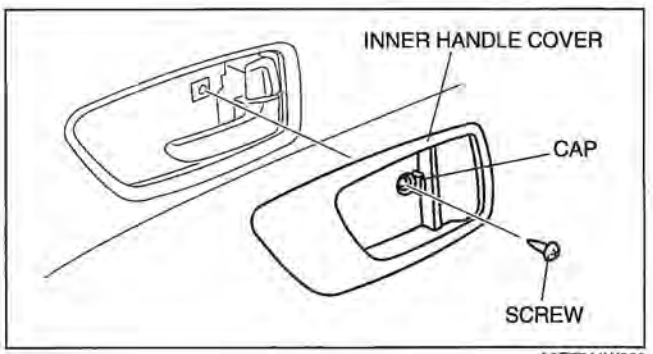

A6E7744W009

4. Remove the cover, then remove screws.
5. Disengage clips A from the rear door using a fastener remover.
6. Pull the rear door trim upward, then disengage tabs B from the rear door.
7. Disconnect the power window subswitch connector.
8. Remove the rear door trim.
9. Remove the switch panel from the rear door trim.
10. Install in the reverse order of removal.

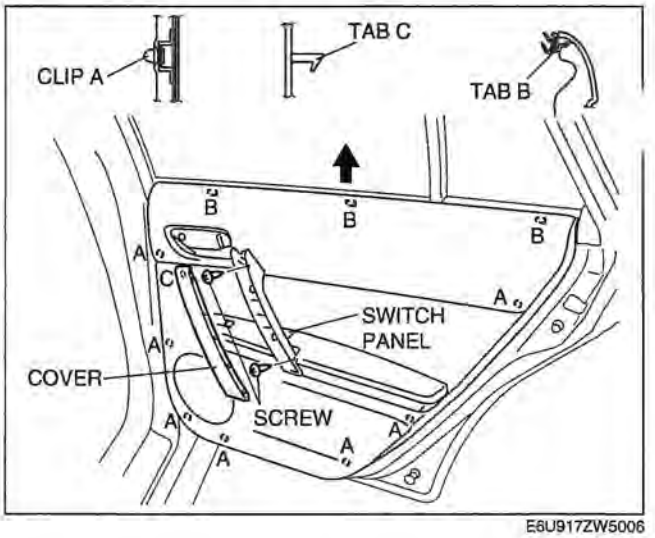

E6U917ZW5006

C-PILLAR TRIM REMOVAL/INSTALLATION

E6U091768150W04

Sport Sedan

1. Remove the rear scuff plate. (See 09–17–12 REAR SCUFF PLATE REMOVAL/INSTALLATION.)
2. Remove the rear side seat. (See 09–13–16 REAR SEAT REMOVAL/INSTALLATION [SPORT SEDAN].)
3. Remove the tire house trim. (See 09–17–15 TIRE HOUSE TRIM REMOVAL/INSTALLATION.)
4. Partially peel back the seaming welt.
5. Remove the cap using a fastener remover, and remove the bolt (with curtain air bag system).
6. Disengage clips A and pin B using a fastener remover.
7. Pull the C-pillar trim outward, then disengage the tab from the body.
8. Install in the reverse order of removal.

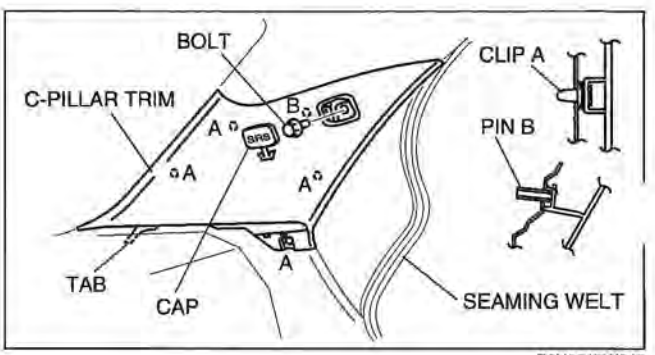

B6U0917W015

5-Door

1. Remove the rear scuff plate. (See 09–17–12 REAR SCUFF PLATE REMOVAL/INSTALLATION
2. Remove the tire house trim. (See 09–17–15 TIRE HOUSE TRIM REMOVAL/INSTALLATION.)
3. Remove the trunk side upper trim. (See 09–17–17 TRUNK SIDE TRIM REMOVAL/INSTALLATION.)
4. Turn the seaming welt over.
5. Remove the cap using a fastener remover the bolt. (with curtain air bag system)
6. Disengage clips A and pin B using a fastener remover.
7. Pull the C-pillar trim forward, then disengage the hook from the body.
8. Remove the rear center seat belt tongue from the C-pillar trim. (LH only)
9. Remove the C-pillar trim.
10. Install in the reverse order of removal.

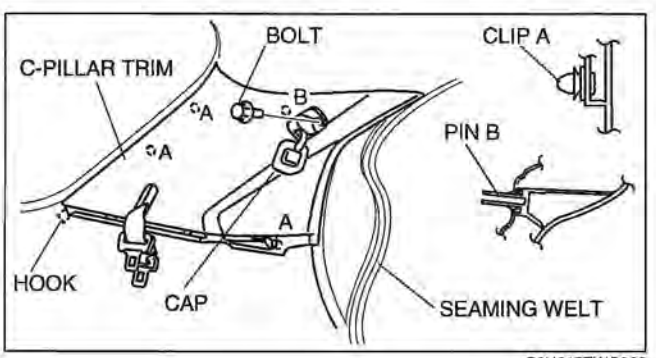

C6U917ZWC002

Sport Wagon

1. Remove the rear scuff plate. (See 09–17–12 REAR SCUFF PLATE REMOVAL/INSTALLATION
2. Remove the tire house trim. (See 09–17–15 TIRE HOUSE TRIM REMOVAL/INSTALLATION.)
   Remove the trunk side upper trim. (See 09–17–18 TRUNK SIDE UPPER TRIM REMOVAL/INSTALLATION [5-DOOR, SPORT WAGON].)
4. Turn the seaming welt over.
5. Remove the fastener.
6. Pull the C-pillar trim forward, then disengage the clip A and pin B from the body.
7. Remove the hook from the body, then remove the C-pillar trim.
8. Install in the reverse order of removal.

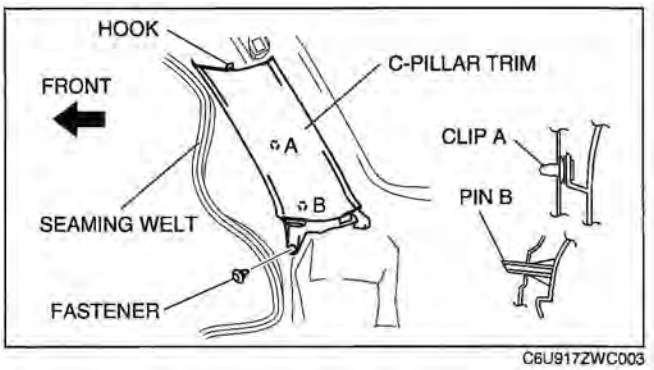

C6U917ZWC003

D-PILLAR TRIM REMOVAL/INSTALLATION [SPORT WAGON]

E6U091768150W05

1. Remove the rear scuff plate. (See 09–17–12 REAR SCUFF PLATE REMOVAL/INSTALLATION
2. Remove the tire house trim. (See 09–17–15 TIRE HOUSE TRIM REMOVAL/INSTALLATION.)
3. Remove the trunk side upper trim. (See 09–17–18 TRUNK SIDE UPPER TRIM REMOVAL/INSTALLATION [5-DOOR, SPORT WAGON].)
4. Pull the D-pillar trim forward, then disengage the clips A and pin B from the body.
5. Remove the hook from the body, then remove the D-pillar trim.
6. Install in the reverse order of removal.

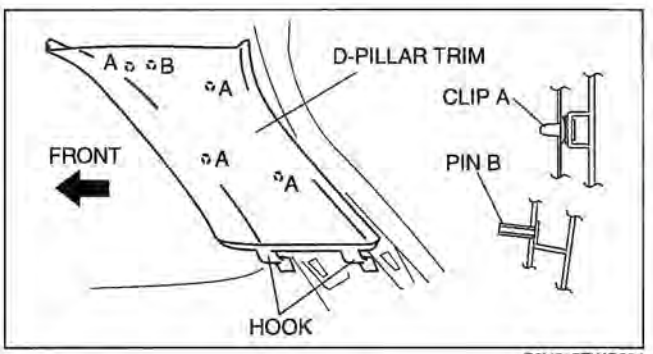

C6U917ZWC004

TIRE HOUSE TRIM REMOVAL/INSTALLATION

E6U091768580W01

Sport Sedan

1. Remove the rear scuff plate. (See 09–17–12 REAR SCUFF PLATE REMOVAL/INSTALLATION.)
2. Remove the rear side seat. (See 09–13–16 REAR SEAT REMOVAL/INSTALLATION [SPORT SEDAN].) (See 09–13–14 REAR SEAT REMOVAL/INSTALLATION [MAZDASPEED6].)
3. Remove the fastener.
4. Pull the tire house trim outward, disengage clips A from the body, and remove the tire house trim.
5. Install in the reverse order of removal.

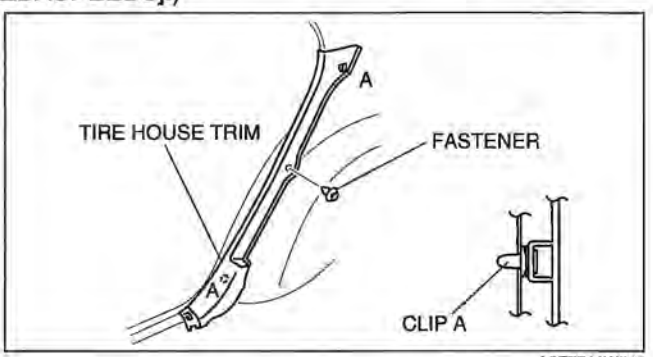

A6E7744W015

5-Door, Sport Wagon

1. Remove the rear scuff plate. (See 09–17–12 REAR SCUFF PLATE REMOVAL/INSTALLATION.)
2. Pull the tire house trim toward you, then disengage clip B from the body and clip A, hooks C, D from the trunk side trim.
3. Remove the tire house trim.
4. Install in the reverse order of removal.

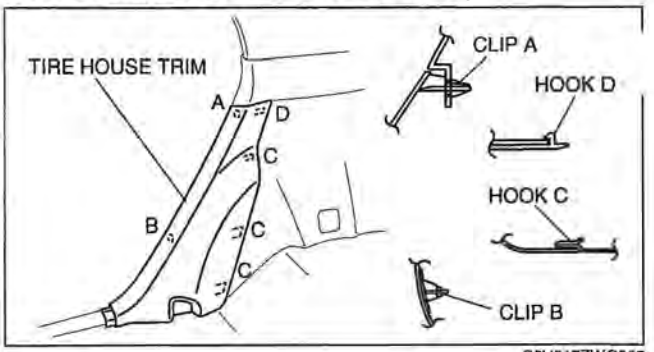

C6U917ZWC005

REAR PACKAGE TRIM REMOVAL/INSTALLATION [SPORT SEDAN]

E6U091768580W02

1. Remove the high-mount brake light.
2. Fold down the rear seat back.
3. Remove the fasteners.
4. Pull the rear package trim upward, then disengage the clips from the body.
5. Disengage the tabs, then remove the rear package trim.
6. Install in the reverse order of removal.

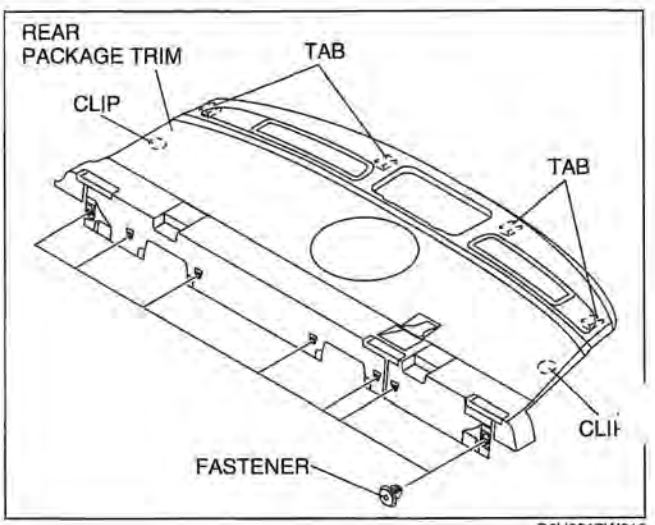

B6U0917W016

TRUNK SIDE TRIM REMOVAL/INSTALLATION

E6U091768810W01

Sport Sedan

1. Remove the trunk end trim. (See 09–17–19 TRUNK END TRIM REMOVAL/INSTALLATION.)
   Remove the fasteners, then remove the trunk side trim.
3. Install in the reverse order of removal.

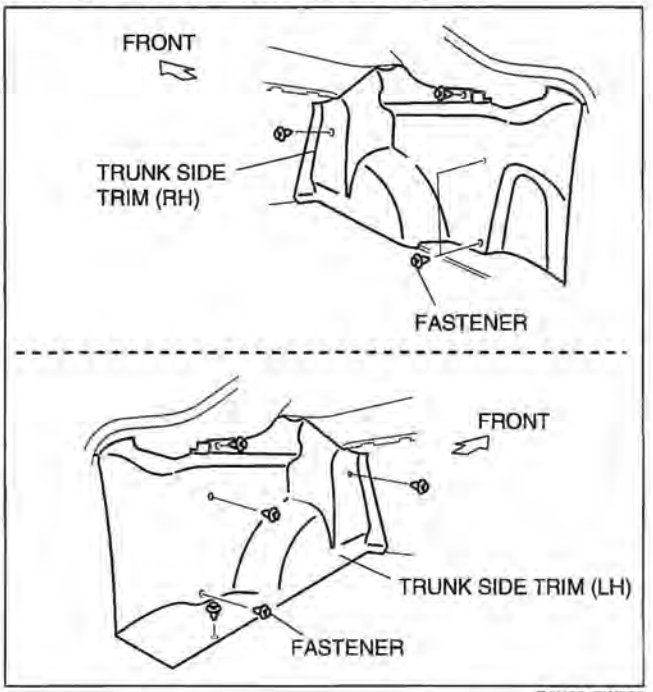

B6U0917W022

09–17

5-Door

1. Remove the following parts:
   (1) Trunk end trim (See 09–17–19 TRUNK END TRIM REMOVAL/INSTALLATION.)
   (2) Rear scuff plate (See 09–17–12 REAR SCUFF PLATE REMOVAL/INSTALLATION
   (3) Tire house trim (See 09–17–15 TIRE HOUSE TRIM REMOVAL/INSTALLATION.)
   (4) Trunk side upper trim (See 09–17–18 TRUNK SIDE UPPER TRIM REMOVAL/INSTALLATION [5-DOOR, SPORT WAGON].)
2. Remove the trunk side trim cover.
3. Remove the cargo hooks.
4. Remove the fasteners.
5. Pull the trunk side trim toward you, then disengage clips A from the body.
6. Install in the reverse order of removal.

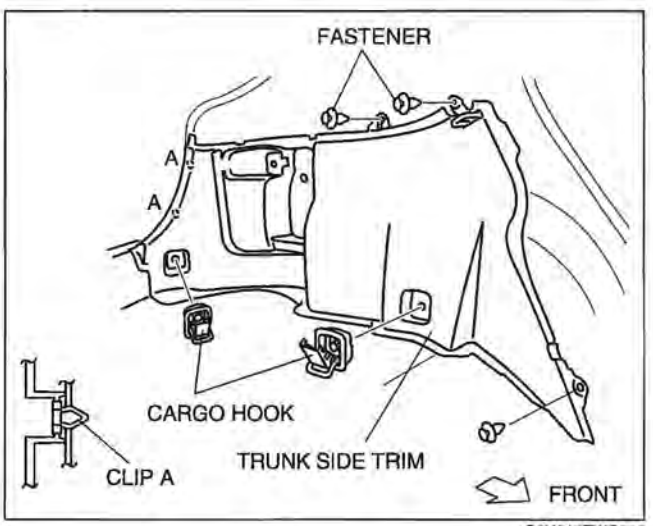

C6U917ZWC006

Spot Wagon

1. Remove the following parts:
   (1) Trunk end trim (See 09–17–19 TRUNK END TRIM REMOVAL/INSTALLATION.)
   (2) Rear scuff plate (See 09–17–12 REAR SCUFF PLATE REMOVAL/INSTALLATION
   (3) Tire house trim (See 09–17–15 TIRE HOUSE TRIM REMOVAL/INSTALLATION.)
   (4) Trunk side upper trim (See 09–17–18 TRUNK SIDE UPPER TRIM REMOVAL/INSTALLATION [5-DOOR, SPORT WAGON].)
2. Remove the trunk side trim cover.



C6U917ZWC007

3. Remove the cargo hooks.
4. Remove the fasteners.
5. Pull the trunk side trim toward you, then disengage clips A from the body.
6. Install in the reverse order of removal.

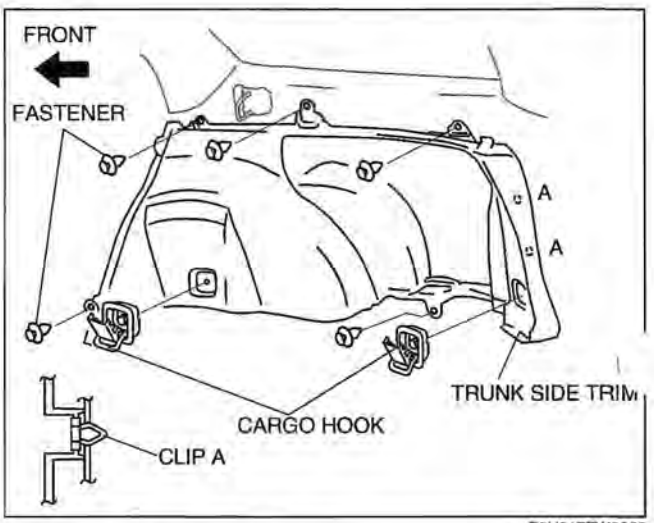

E6U917ZW5009

TRUNK SIDE UPPER TRIM REMOVAL/INSTALLATION [5-DOOR, SPORT WAGON]

E6U091768810W02

5-Door

1. Disconnect the negative battery cable. (LH only)
2. Remove the rear scuff plate. (See 09–17–12 REAR SCUFF PLATE REMOVAL/INSTALLATION.)
3. Remove the tire house trim. (See 09–17–15 TIRE HOUSE TRIM REMOVAL/INSTALLATION.)
4. Remove the cargo compartment light. (LH only) (See 09–18–29 CARGO COMPARTMENT LIGHT REMOVAL/INSTALLATION [5-DOOR, SPORT WAGON].)
5. Remove the rear seat remote lever.
6. Remove the screw.
7. Pull the trunk side upper trim toward you, then disengage clips A from the body.
8. Install in the reverse order of removal.

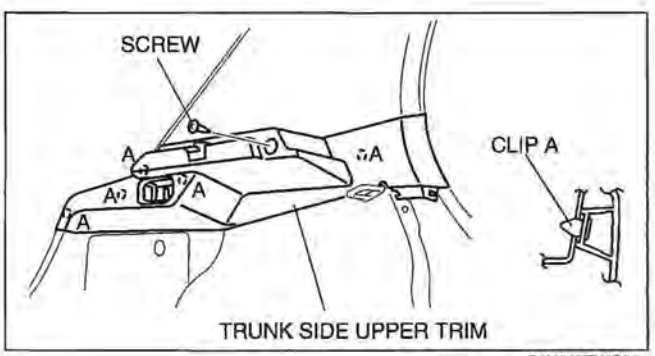

C6U917ZWC0

Sport Wagon

1. Remove the rear scuff plate. (See 09–17–12 REAR SCUFF PLATE REMOVAL/INSTALLATION.)
2. Remove the tire house trim. (See 09–17–15 TIRE HOUSE TRIM REMOVAL/INSTALLATION.)
   Remove the rear seat remote lever.
   Remove the cargo hooks.
5. Remove the screw.
6. Pull the trunk side upper trim toward you, then remove the hooks A, C, D, F and clips B, pin E from the body.
7. Remove the trunk side upper trim.
8. Install in the reverse order of removal.

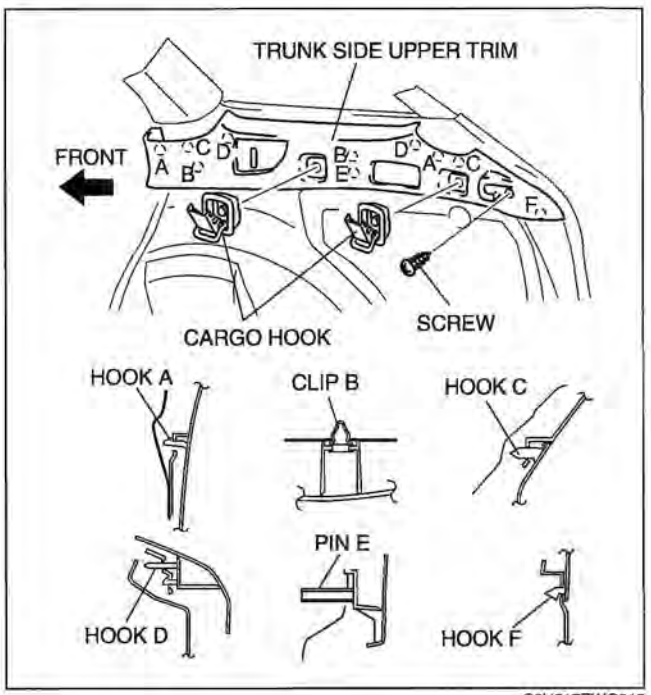

C6U917ZWC010

09–17

PARTITION BOARD REMOVAL/INSTALLATION

E6U091768810W05

1. Remove the fasteners.
2. Remove the partition board.
   Install in the reverse order of removal.

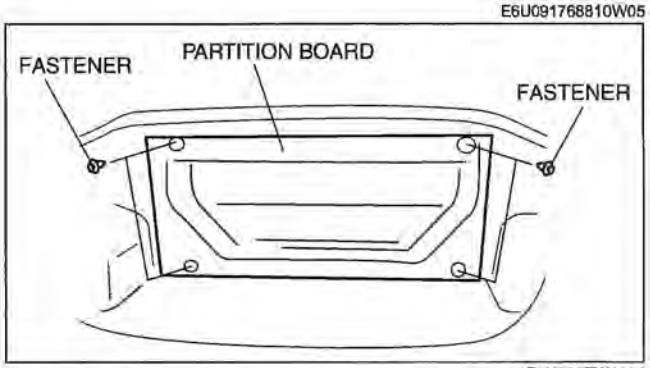

E6U917ZW1004

TRUNK END TRIM REMOVAL/INSTALLATION

E6U091768810W03

Sport Sedan

1. Remove the fasteners.
2. Pull the trunk end trim upward, then disengage clips A, pins B, and the tabs.
3. Remove the trunk end trim.
4. Install in the reverse order of removal.

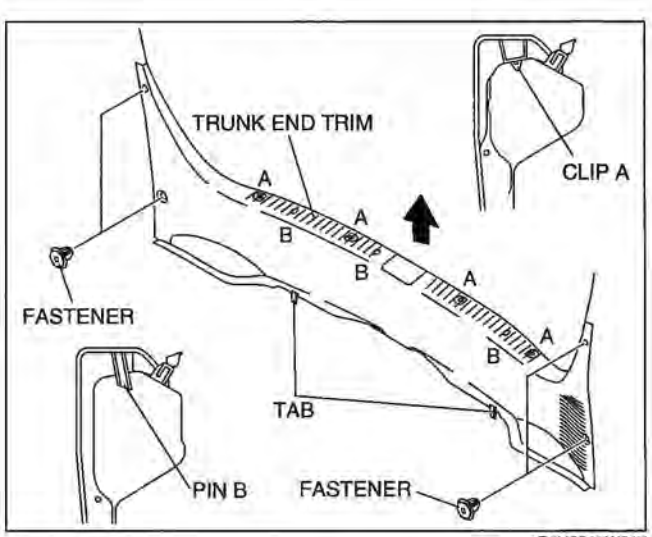

B6U0917W017

5-Door

1. Pull the trunk end trim upward, then disengage clips A, pins B, and hooks.
2. Remove the trunk end trim.
3. Install in the reverse order of removal.

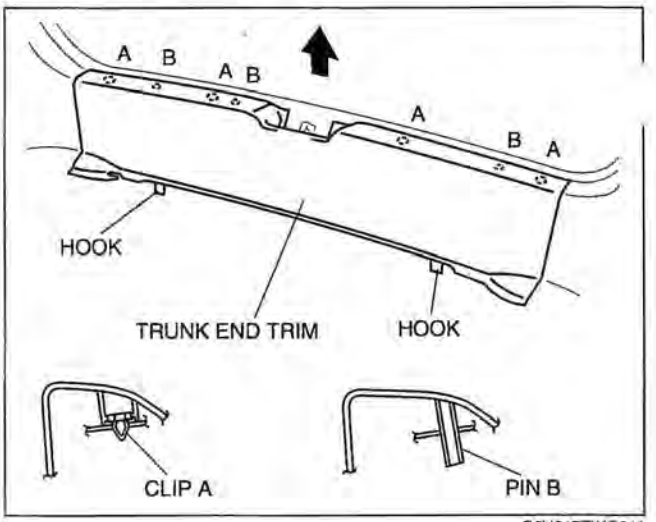

C6U917ZWC011

Sport Wagon

1. Pull the trunk end trim upward, then disengage clips A and pins B from the body.
2. Remove the trunk end trim.
3. Install in the reverse order of removal.

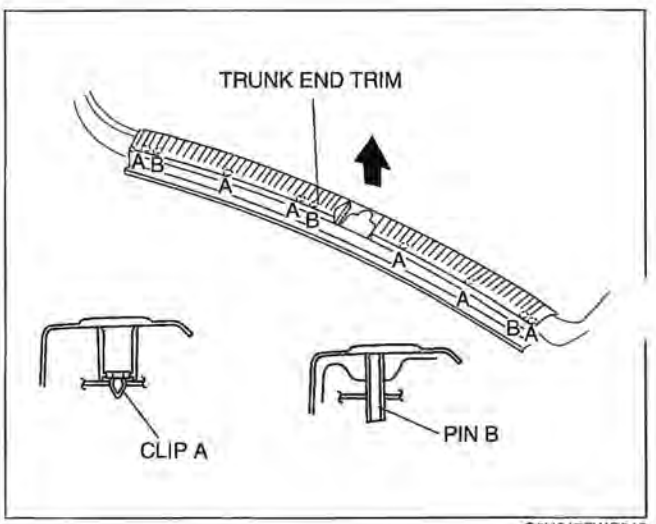

C6U917ZWC012

TRUNK LID TRIM REMOVAL/INSTALLATION [SPORT SEDAN]

E6U091768810W04

1. Pull the handle outward, then remove the handle.
2. Remove the fasteners, then remove the trunk lid trim.
3. Install in the reverse order of removal.

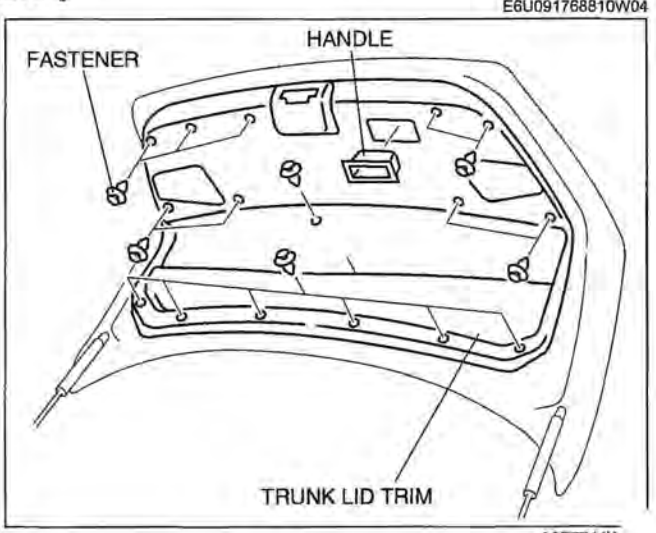

A6E7744W

LIFTGATE UPPER TRIM REMOVAL/INSTALLATION [5-DOOR, SPORT WAGON]

E6U091768940W01

5-Door

1. Pull the liftgate upper trim toward you, then disengage clips A, and pin B from the body.
2. Remove the liftgate upper trim.
3. Install in the reverse order of removal.

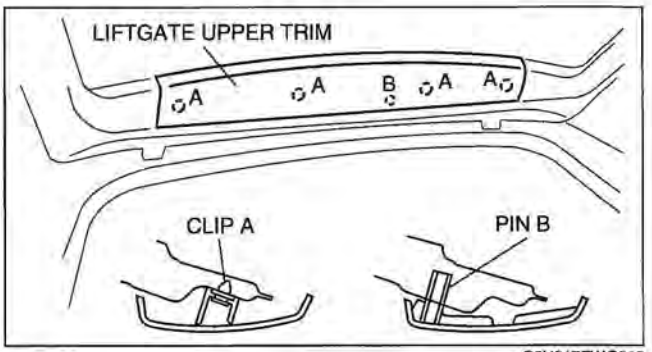

C6U917ZWC013

Sport Wagon
Without rear spoiler

Caution

- **Removing the liftgate upper trim by pulling on the middle section of the trim could damage the high-mount brake light. When removing the trim, be sure to pull on the side edges of the trim only.**

1. Pull the liftgate upper trim on the side edges towards you, then disengage pins A from the body.
2. Pull the middle section of the trim towards you and disengage clips B and pin C from the body.
3. Remove the liftgate upper trim.
4. Install in the reverse order of removal.

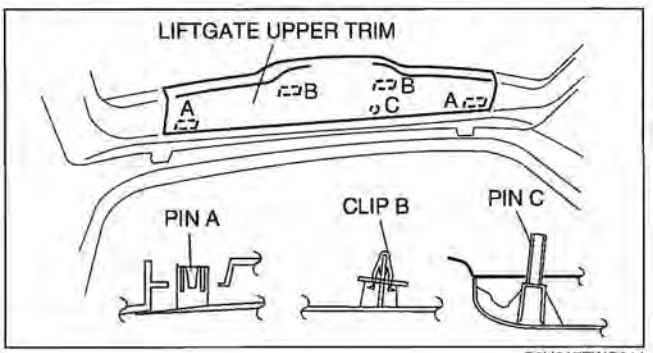

C6U917ZWC014

With rear spoiler

1. Pull the liftgate upper trim toward you, then disengage the pin A, C and clip B from the body.
2. Remove the liftgate upper trim.
3. Install in the reverse order of removal.

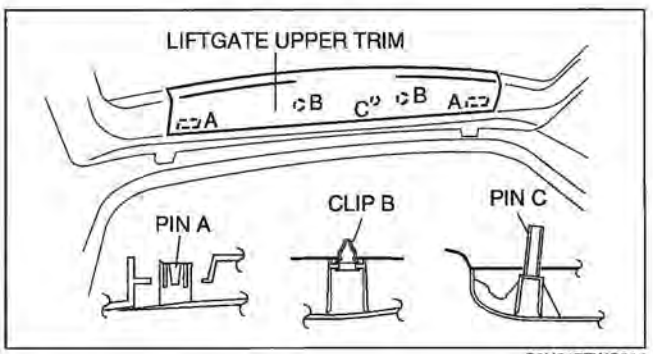

C6U917ZWC015

LIFTGATE SIDE TRIM REMOVAL/INSTALLATION [5-DOOR, SPORT WAGON]

E6U091768940W02

5-Door

1. Remove the liftgate upper trim. (See09–17–21 LIFTGATE UPPER TRIM REMOVAL/INSTALLATION [5-DOOR, SPORT WAGON])
2. Position the strap hanger as shown in the figure.

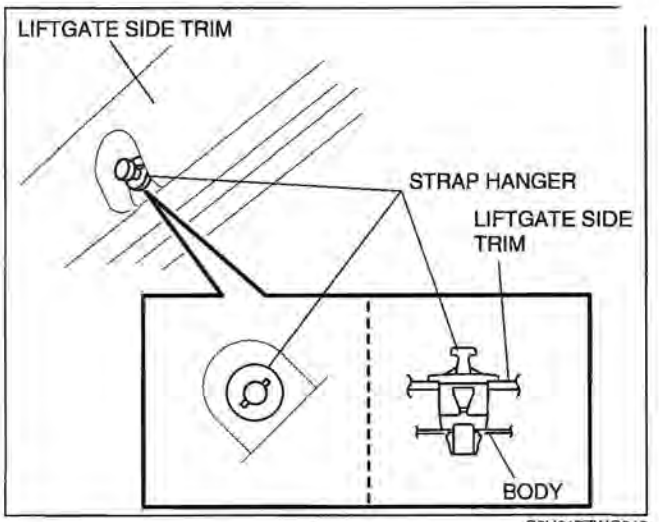

C6U917ZWC016

3. Pull the liftgate side trim toward you, then disengage clips A, pin B and the strap hanger from the body and pin B, hook C, D from the liftgate lower trim.
4. Remove the liftgate side trim.
5. Remove the hanger strap from the liftgate side trim.
6. Install in the reverse order of removal.

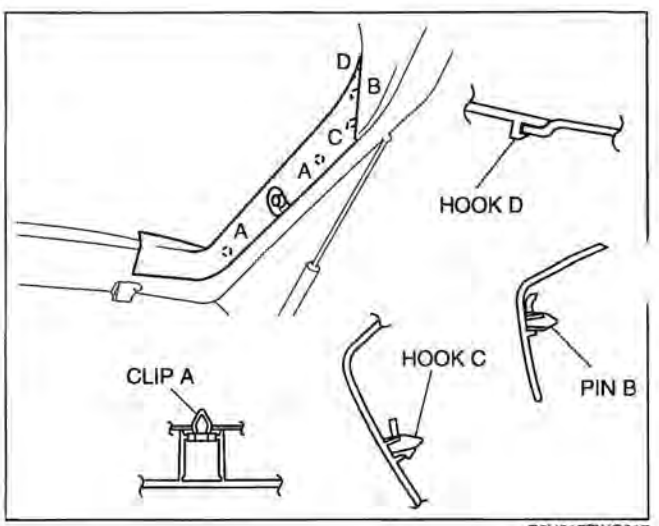

C6U917ZWC017

Sport Wagon

1. Remove the liftgate upper trim. (See09–17–21 LIFTGATE UPPER TRIM REMOVAL/INSTALLATION [5-DOOR, SPORT WAGON])
2. Remove the fastener.
3. Pull the liftgate side trim toward you, then disengage the clips A and hook B, C from the body.
4. Remove the liftgate side trim.
5. Install in the reverse order of removal.

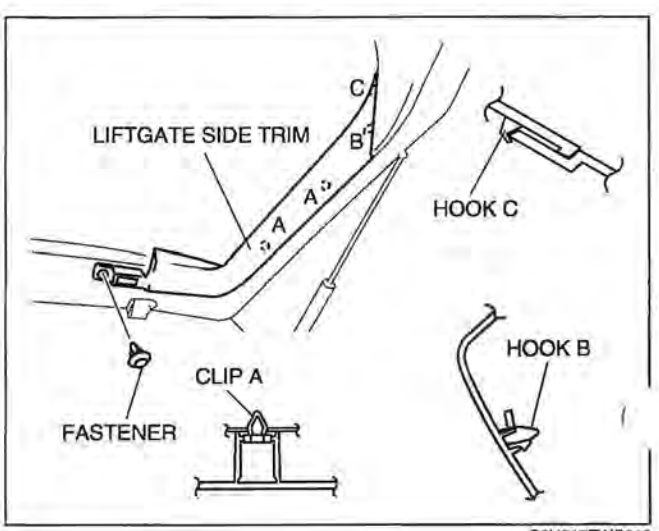

C6U917ZWC018

LIFTGATE LOWER TRIM REMOVAL/INSTALLATION [5-DOOR, SPORT WAGON]

E6U091768940W03

5-Door

1. Remove the liftgate upper trim. (See09–17–21 LIFTGATE UPPER TRIM REMOVAL/INSTALLATION [5-DOOR, SPORT WAGON])
2. Remove the liftgate side trim. (See09–17–22 LIFTGATE SIDE TRIM REMOVAL/INSTALLATION [5-DOOR, SPORT WAGON])
3. Pull the handle toward you, then remove the handle.
4. Pull the liftgate lower trim toward you, then disengage clips A, B and pins C, D from the body.
5. Remove the liftgate lower trim.
6. Install in the reverse order of removal.

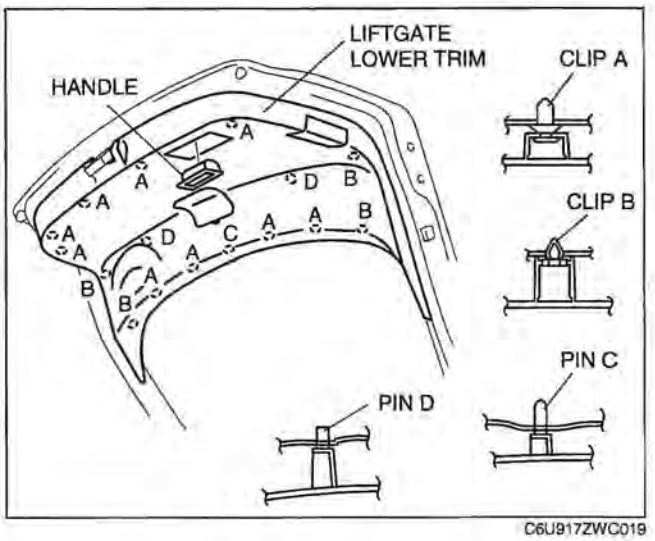

C6U917ZWC019

Sport Wagon

1. Remove the liftgate upper trim. (See09–17–21 LIFTGATE UPPER TRIM REMOVAL/INSTALLATION [5-DOOR, SPORT WAGON])
2. Remove the liftgate side trim. (See09–17–22 LIFTGATE SIDE TRIM REMOVAL/INSTALLATION [5-DOOR, SPORT WAGON])
   Pull the handle toward you, then remove it.

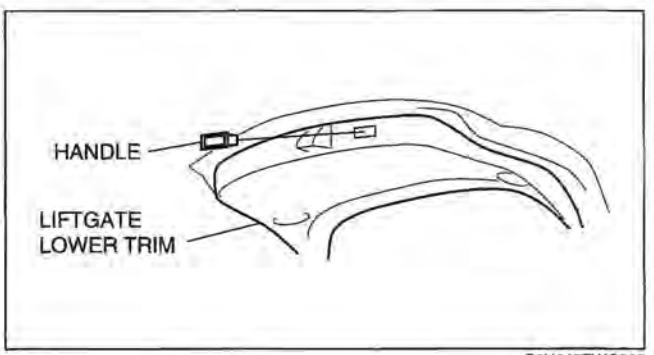

C6U917ZWC020

4. Pull the liftgate lower trim toward you, then disengage the clips A and pins B, C from the body.
5. Remove the liftgate lower trim.
6. Install in the reverse order of removal.

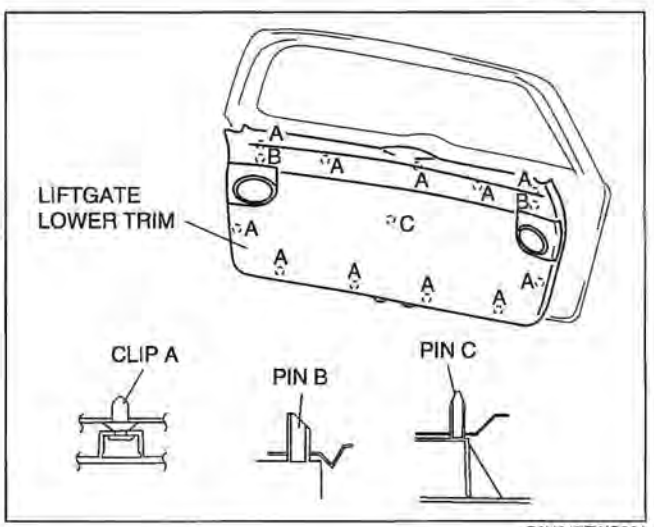

C6U917ZWC021

HEADLINER REMOVAL/INSTALLATION

E6U091768030W01

1. Disconnect the negative battery cable.
2. Partially peel back the seaming welt.
3. Remove the following parts:
   (1) Microphone (vehicles with car-navigation system) (See 09–20–14 MICROPHONE REMOVAL/INSTALLATION.)
   (2) Sunroof seaming welt (vehicles with sunroof only)
   (3) A-pillar trims (See 09–17–10 A-PILLAR TRIM REMOVAL/INSTALLATION.)
   (4) Upper anchor of the front seat belt (See 08–11–3 FRONT SEAT BELT REMOVAL/INSTALLATION.)
   (5) Front scuff plate (See 09–17–11 FRONT SCUFF PLATE REMOVAL/INSTALLATION.)
   (6) Rear scuff plate (See 09–17–12 REAR SCUFF PLATE REMOVAL/INSTALLATION.)
   (7) B-pillar lower trims (See 09–17–10 B-PILLAR LOWER TRIM REMOVAL/INSTALLATION.)
   (8) B-pillar upper trims (See 09–17–11 B-PILLAR UPPER TRIM REMOVAL/INSTALLATION.)
   (9) C-pillar trims (See 09–17–14 C-PILLAR TRIM REMOVAL/INSTALLATION.)
   (10) D-pillar trims (Sport Wagon) (See 09–17–15 D-PILLAR TRIM REMOVAL/INSTALLATION [SPORT WAGON].)
   (11) Front and rear map lights (See 09–18–27 FRONT MAP LIGHT REMOVAL/INSTALLATION.) (See 09–18–28 REAR MAP LIGHT REMOVAL/INSTALLATION.)
   (12) Cargo compartment light (See 09–18–29 CARGO COMPARTMENT LIGHT REMOVAL/INSTALLATION [5-DOOR, SPORT WAGON].)
4. Disconnect the auto-dimming mirror connector. (vehicles with auto-dimming mirror only)
5. Remove the sunvisors. (See 09–17–25 SUNVISOR REMOVAL/INSTALLATION.)
6. Remove the assist handle. (See 09–17–26 ASSIST HANDLE REMOVAL/INSTALLATION.)
7. Remove the net anchor. (Sport Wagon)
8. Disconnect the roof harness connector, remove the clip, and remove the connector.
9. Disconnect the rear washer hose. (5-Door, Sport Wagon)
10. Place the rear center seat belt bezel out of the way of the headliner. (Sport Wagon)
11. Remove the fasteners.
12. Remove the retainer holding the roof panel and remove the headliner.

Sport Sedan, 5-Door

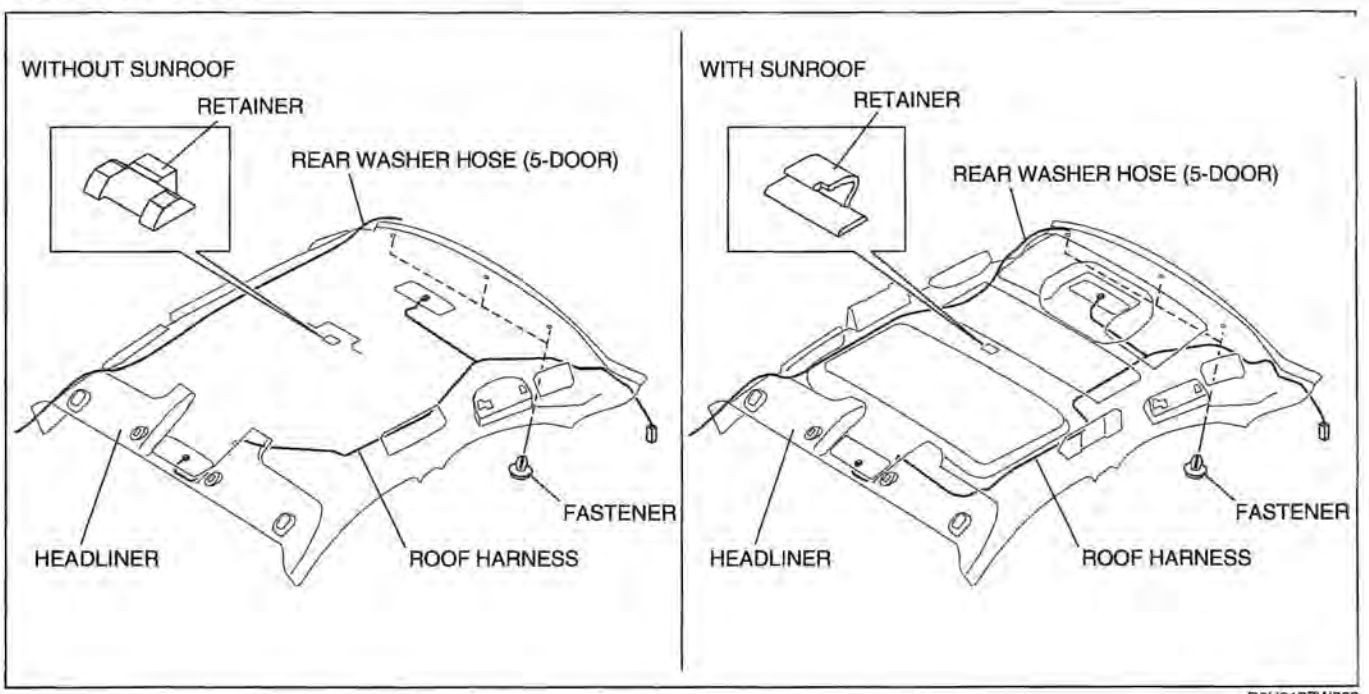

D6U917ZW002

Sport Wagon

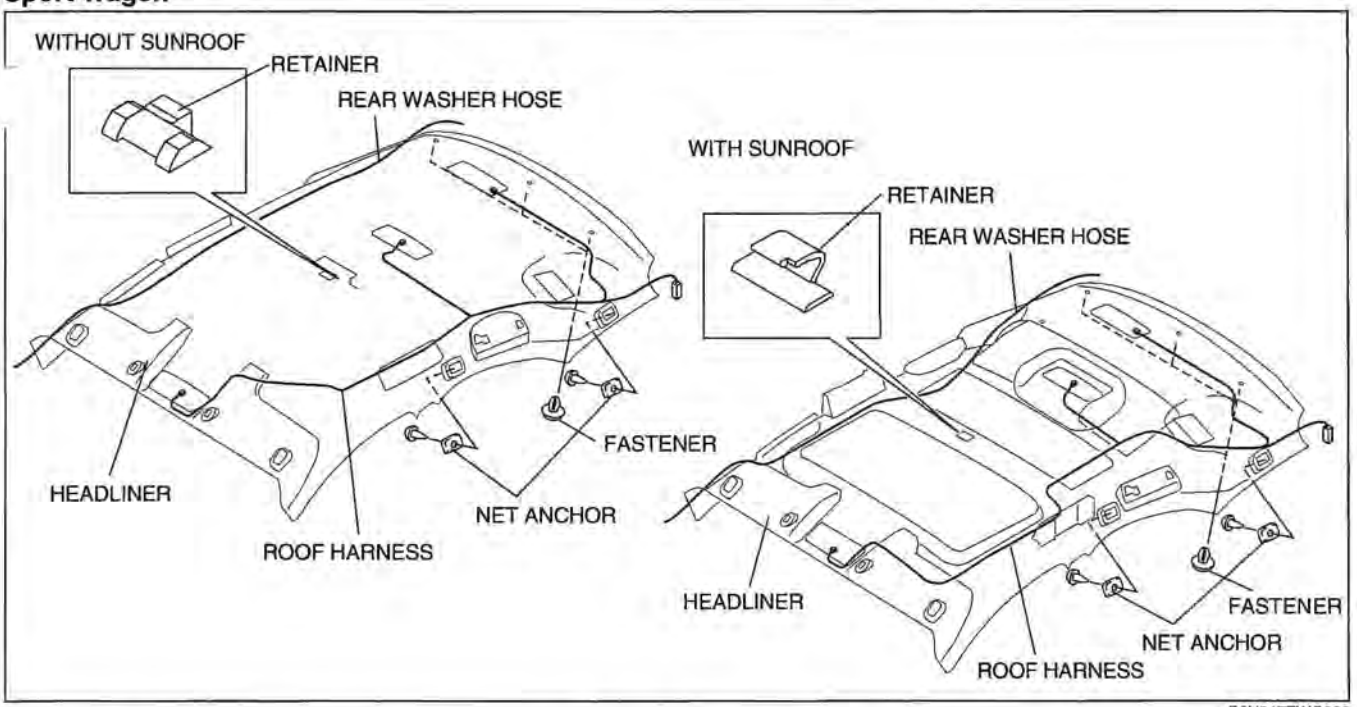

C6U917ZWC023

13. Take the headliner off from the passenger-side door opening. (Sport Sedan, 5-Door)
14. Take the headliner off from the liftgate opening. (Sport Wagon)
15. Install in the reverse order of removal.

09–17

SUNVISOR REMOVAL/INSTALLATION

Remove the screw, then the sunvisor.
.. Disconnect the vanity mirror illumination connector.

E6U091768030W02

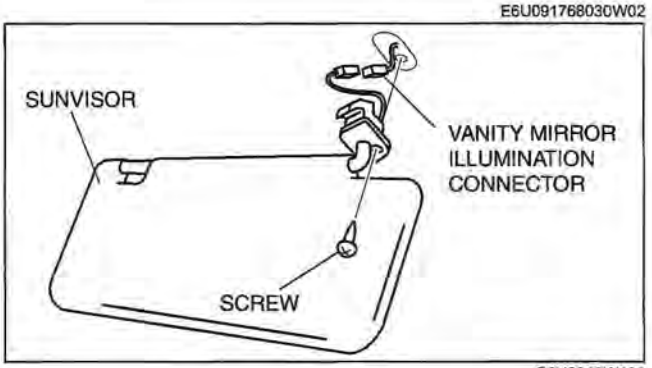

C6U0917W101

3. Disengage the center adapter (sunvisor stopper) from the body using a fastener remover.
4. Install in the reverse order of removal.

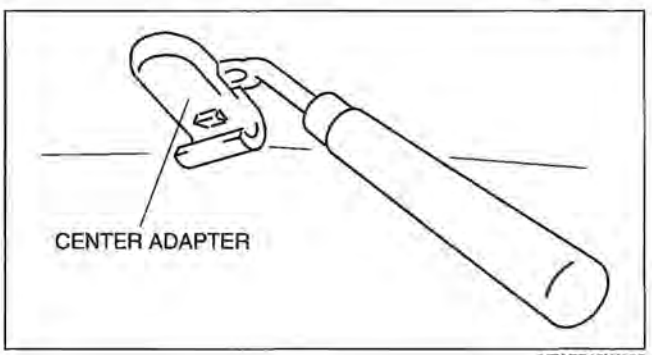

YTA7746W103

ASSIST HANDLE REMOVAL/INSTALLATION

E6U091768030W03

1. Insert a screwdriver into the assist handle notch and remove the assist handle cover.

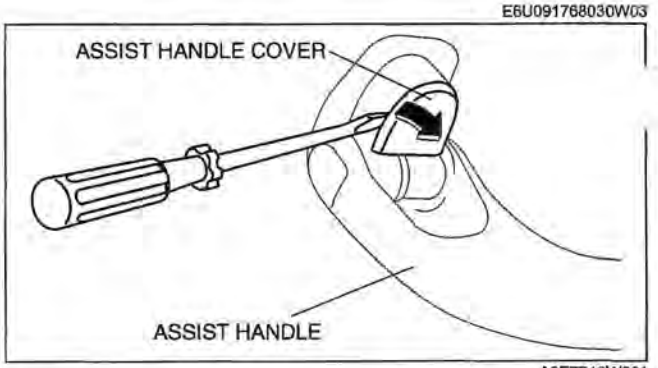

A6E7746W001

2. Pull the assist handle outward, then remove the assist handle.
3. Install in the reverse order of removal.

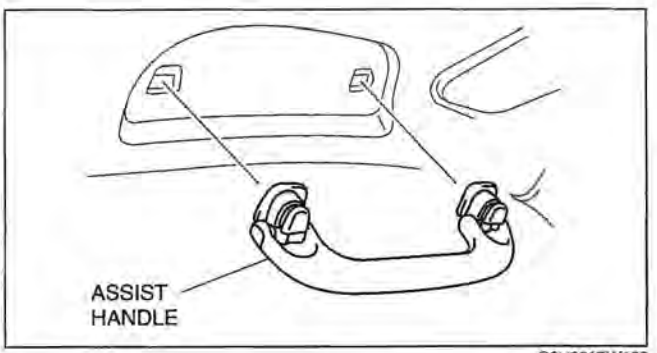

C6U0917W102

SHOCK ABSORBING PAD REMOVAL/INSTALLATION

E6U091700113W01

1. Disconnect the negative battery cable.
2. Partially peel back the seaming welt.
3. Remove the following parts:
   (1) Microphone (vehicles with car-navigation system) (See 09–20–14 MICROPHONE REMOVAL/INSTALLATION.)
   (2) Sunroof seaming welt (vehicles with sunroof only)
   (3) A-pillar trims (See 09–17–10 A-PILLAR TRIM REMOVAL/INSTALLATION.)
   (4) Upper anchor of the front seat belt (See 08–11–3 FRONT SEAT BELT REMOVAL/INSTALLATION.)
   (5) Front scuff plate (See 09–17–11 FRONT SCUFF PLATE REMOVAL/INSTALLATION.)
   (6) Rear scuff plate (See 09–17–12 REAR SCUFF PLATE REMOVAL/INSTALLATION.)
   (7) B-pillar lower trims (See 09–17–10 B-PILLAR LOWER TRIM REMOVAL/INSTALLATION.)
   (8) B-pillar upper trims (See 09–17–11 B-PILLAR UPPER TRIM REMOVAL/INSTALLATION.)
   (9) C-pillar trims (See 09–17–14 C-PILLAR TRIM REMOVAL/INSTALLATION.)
   (10) D-pillar trims (Sport Wagon) (See 09–17–15 D-PILLAR TRIM REMOVAL/INSTALLATION [SPORT WAGON].)
   (11) Front and rear map lights (See 09–18–27 FRONT MAP LIGHT REMOVAL/INSTALLATION.) (See 09–18–28 REAR MAP LIGHT REMOVAL/INSTALLATION.)
   (12) Cargo compartment light (See 09–18–29 CARGO COMPARTMENT LIGHT REMOVAL/INSTALLATION [5-DOOR, SPORT WAGON].)
4. Disconnect the auto-dimming mirror connector. (vehicles with auto-dimming mirror only)
5. Remove the sunvisors. (See 09–17–25 SUNVISOR REMOVAL/INSTALLATION.)
6. Remove the assist handle. (See 09–17–26 ASSIST HANDLE REMOVAL/INSTALLATION.)
7. Remove the headliner. (See 09–17–24 HEADLINER REMOVAL/INSTALLATION.)

8. Remove the fasteners.
9. Pull the shock absorbing pad, then disengage the clip A or B from the body.
   Install in the reverse order of removal.

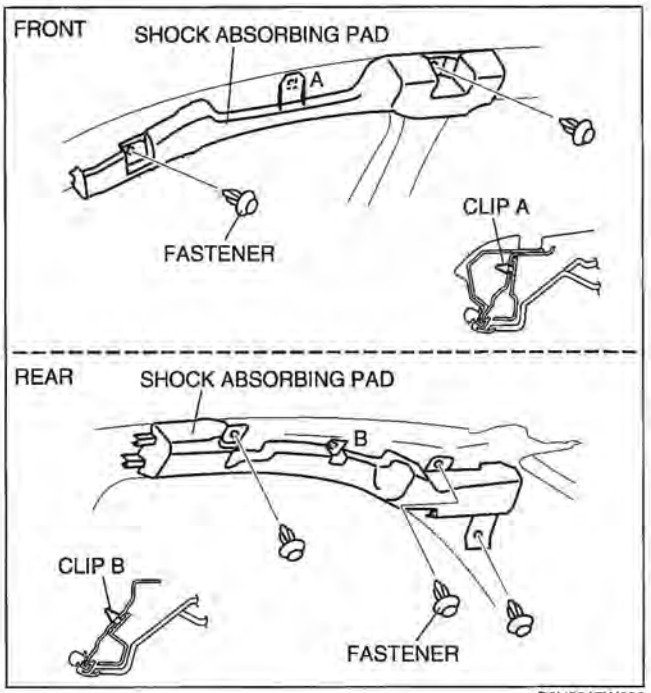

B6U0917W023

TONNEAU COVER ANCHOR REMOVAL/INSTALLATION [SPORT WAGON]

E6U091768580W03

1. Remove the rear scuff plate. (See 09–17–12 REAR SCUFF PLATE REMOVAL/INSTALLATION.)
2. Remove the tire house trim. (See 09–17–15 TIRE HOUSE TRIM REMOVAL/INSTALLATION.)
3. Remove the trunk side upper trim. (See 09–17–18 TRUNK SIDE UPPER TRIM REMOVAL/INSTALLATION [5-DOOR, SPORT WAGON].)
4. Remove the screws.
   Remove the tonneau cover anchor.
   Install in the reverse order of removal.

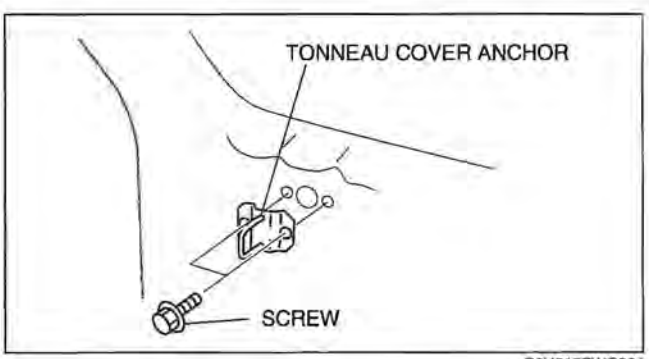

C6U917ZWC024

FLOOR COVERING REMOVAL/INSTALLATION

E6U091768660W01

1. Disconnect the negative battery cable.
2. Remove the following parts:
   (1) Front seats (See 09–13–4 FRONT SEAT REMOVAL/INSTALLATION [L3 WITH TC].)(See 09–13–5 FRONT SEAT REMOVAL/INSTALLATION [EXCEPT L3 WITH TC].)
   (2) Rear seat (See 09–13–16 REAR SEAT REMOVAL/INSTALLATION [SPORT SEDAN].) (See 09–13–14 REAR SEAT REMOVAL/INSTALLATION [MAZDASPEED6].) (See 09–13–17 REAR SEAT REMOVAL/INSTALLATION [5-DOOR, SPORT WAGON].)
   (3) Car-navigation unit (vehicles with car-navigation system) (See 09–20–6 CAR-NAVIGATION UNIT REMOVAL/INSTALLATION.)
   (4) Audio amplifier (BOSE) (See 09–20–8 AUDIO AMPLIFIER REMOVAL/INSTALLATION.)
   (5) Front scuff plates (See 09–17–11 FRONT SCUFF PLATE REMOVAL/INSTALLATION.)
   (6) Rear scuff plates (See 09–17–12 REAR SCUFF PLATE REMOVAL/INSTALLATION.)
   (7) Console (See 09–17–8 CONSOLE REMOVAL/INSTALLATION.)
   (8) Front side trims (See 09–17–11 FRONT SIDE TRIM REMOVAL/INSTALLATION.)
   (9) B-pillar lower trims (See 09–17–10 B-PILLAR LOWER TRIM REMOVAL/INSTALLATION.)
   (10)Lower anchor of the front seat belt installation bolts (See 08–11–3 FRONT SEAT BELT REMOVAL/INSTALLATION.)
   (11)Tire house trims (5-Door, Sport Wagon) (See 09–17–15 TIRE HOUSE TRIM REMOVAL/INSTALLATION.)

3. Remove the fuel-filler lid opener bezel.

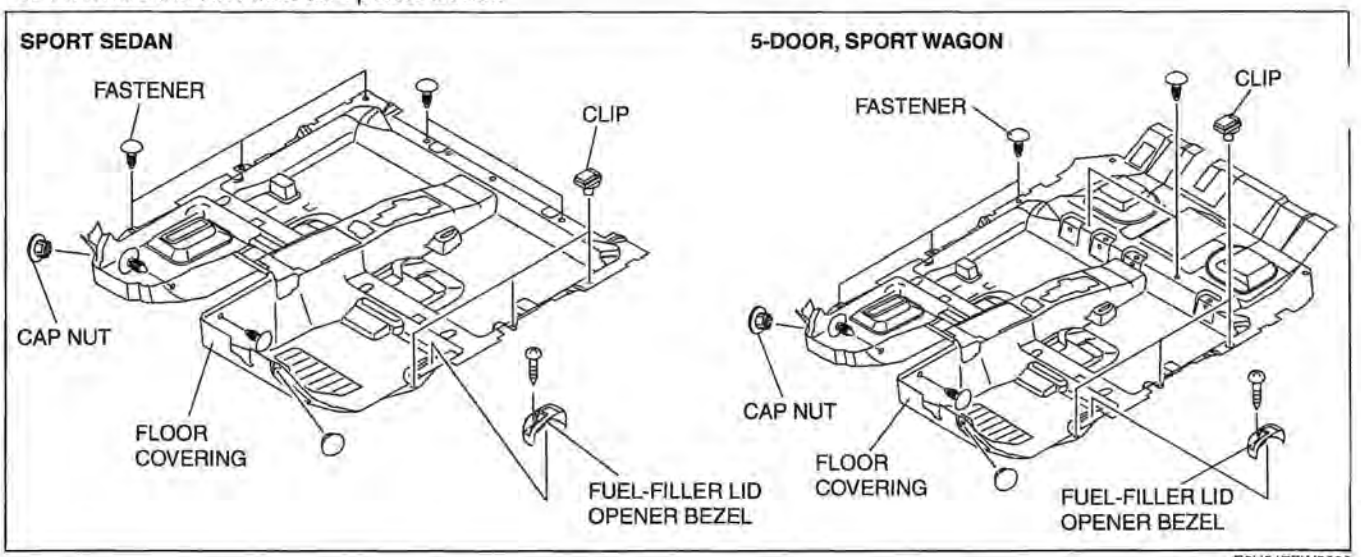

4. Remove the fasteners.
5. Remove the cap nuts.
6. Remove the clips.
7. Take the floor covering off from the front passenger-side door opening.
8. Install in the reverse order of removal.

09–18 LIGHTING SYSTEMS

EXTERIOR LIGHTING SYSTEM LOCATION INDEX. 09–18–3
INTERIOR LIGHTING SYSTEM LOCATION INDEX. 09–18–6
DISCHARGE HEADLIGHT SERVICE WARNINGS. 09–18–7
Discharge Headlight Bulb Service Warnings. 09–18–7
Discharge Headlight Control Module Service Warnings 09–18–7
Discharge Headlight Control Module Reuse 09–18–8
FRONT COMBINATION LIGHT REMOVAL/INSTALLATION. 09–18–8
HEADLIGHT ADJUSTMENT. 09–18–8
HEADLIGHT BULB REMOVAL/INSTALLATION. 09–18–9
Low-beam 09–18–9
High-beam 09–18–10
DISCHARGE HEADLIGHT CONTROL MODULE REMOVAL/INSTALLATION. 09–18–10
DISCHARGE HEADLIGHT SYSTEM INSPECTION. 09–18–11
Discharge Headlight Inoperative 09–18–11
PARKING LIGHT BULB REMOVAL/INSTALLATION. 09–18–12
FRONT TURN LIGHT REMOVAL/INSTALLATION. 09–18–12
FRONT SIDE MARKER LIGHT REMOVAL/INSTALLATION. 09–18–13
Front Side Marker Light Removal Note 09–18–13
FRONT FOG LIGHT REMOVAL/INSTALLATION. 09–18–13
FRONT FOG LIGHT ADJUSTMENT. . . . 09–18–13
FRONT FOG LIGHT BULB REMOVAL/INSTALLATION. 09–18–14
REAR COMBINATION LIGHT REMOVAL/INSTALLATION. 09–18–14
REAR COMBINATION LIGHT BULB REMOVAL/INSTALLATION [5-DOOR, SPORT WAGON] 09–18–15
INBOARD COMBINATION LIGHT REMOVAL/INSTALLATION. 09–18–15
Inboard Combination Light Installation Note. 09–18–15
HIGH-MOUNT BRAKE LIGHT REMOVAL/INSTALLATION [SPORT SEDAN]. 09–18–16
In-Vehicle-Type. 09–18–16
Rear Spoiler Type 09–18–16
HIGH-MOUNT BRAKE LIGHT REMOVAL/INSTALLATION [5-DOOR, SPORT WAGON] 09–18–17
5-Door 09–18–17
Sport Wagon 09–18–17
HIGH-MOUNT BRAKE LIGHT REMOVAL/INSTALLATION [L3 WITH TC] 09–18–18
LICENSE PLATE LIGHT REMOVAL/INSTALLATION. 09–18–18
BACK-UP LIGHT SWITCH REMOVAL/INSTALLATION [G35M-R] 09–18–19
BACK-UP LIGHT SWITCH REMOVAL/INSTALLATION [L3 WITH TC] 09–18–19
BACK-UP LIGHT SWITCH INSPECTION. 09–18–19
COMBINATION SWITCH REMOVAL/INSTALLATION 09–18–19
COMBINATION SWITCH DISASSEMBLY/ASSEMBLY 09–18–20
STEERING ANGLE SENSOR INSPECTION 09–18–20
LIGHT SWITCH REMOVAL/INSTALLATION 09–18–21
LIGHT SWITCH INSPECTION 09–18–21
HAZARD WARNING SWITCH INSPECTION 09–18–21
FRONT FOG LIGHT SWITCH INSPECTION 09–18–22
HEADLIGHT LEVELING SWITCH REMOVAL/INSTALLATION 09–18–22
Headlight Leveling Switch Removal Note 09–18–22
HEADLIGHT LEVELING SWITCH INSPECTION. 09–18–22
AUTO LIGHT-OFF CONTROL MODULE REMOVAL/INSTALLATION 09–18–23
DRL AND AUTO LIGHT-OFF SYSTEM WIRING DIAGRAM. 09–18–24
AUTO LIGHT-OFF CONTROL MODULE INSPECTION 09–18–25
Terminal Voltage List (Reference) 09–18–25
FRONT MAP LIGHT REMOVAL/INSTALLATION 09–18–27
Front Map Light Removal Note 09–18–27
FRONT MAP LIGHT REMOVAL/INSTALLATION [L3 WITH TC] 09–18–27
Front Map Light Removal Note 09–18–28
FRONT MAP LIGHT INSPECTION 09–18–28
REAR MAP LIGHT REMOVAL/INSTALLATION 09–18–28
Rear Map Light Removal Note 09–18–29
REAR MAP LIGHT INSPECTION 09–18–29
CARGO COMPARTMENT LIGHT REMOVAL/INSTALLATION [5-DOOR, SPORT WAGON]. 09–18–29
5-Door. 09–18–29
Sport Wagon 09–18–30
CARGO COMPARTMENT LIGHT INSPECTION [5-DOOR, SPORT WAGON]. 09–18–30
5-Door. 09–18–30
Sport Wagon 09–18–30
CARGO COMPARTMENT LIGHT SWITCH INSPECTION [5-DOOR, SPORT WAGON]. 09–18–31
IGNITION KEY ILLUMINATION BULB REMOVAL/INSTALLATION 09–18–31

ASHTRAY ILLUMINATION BULB REMOVAL/INSTALLATION **09–18–31**
VANITY MIRROR ILLUMINATION BULB REMOVAL/INSTALLATION **09–18–32**
Lens Removal Note..... **09–18–32**
VANITY MIRROR ILLUMINATION INSPECTION **09–18–32**
GLOVE COMPARTMENT LIGHT BULB REMOVAL/INSTALLATION **09–18–33**
COURTESY LIGHT BULB REMOVAL/INSTALLATION **09–18–33**
TRUNK COMPARTMENT LIGHT BULB REMOVAL/INSTALLATION [SPORT SEDAN] **09–18–33**
TRUNK COMPARTMENT LIGHT SWITCH INSPECTION [SPORT SEDAN] **09–18–34**
PANEL LIGHT CONTROL SWITCH REMOVAL/INSTALLATION..... **09–18–34**
Panel Light Control Switch Removal Note..... **09–18–34**
PANEL LIGHT CONTROL SWITCH INSPECTION **09–18–34**
Terminal Voltage Table (Reference) **09–18–34**
Terminals A and F Inspection..... **09–18–35**
DOOR SWITCH REMOVAL/INSTALLATION..... **09–18–36**
DOOR SWITCH INSPECTION **09–18–36**

EXTERIOR LIGHTING SYSTEM LOCATION INDEX

E6U091800000W01

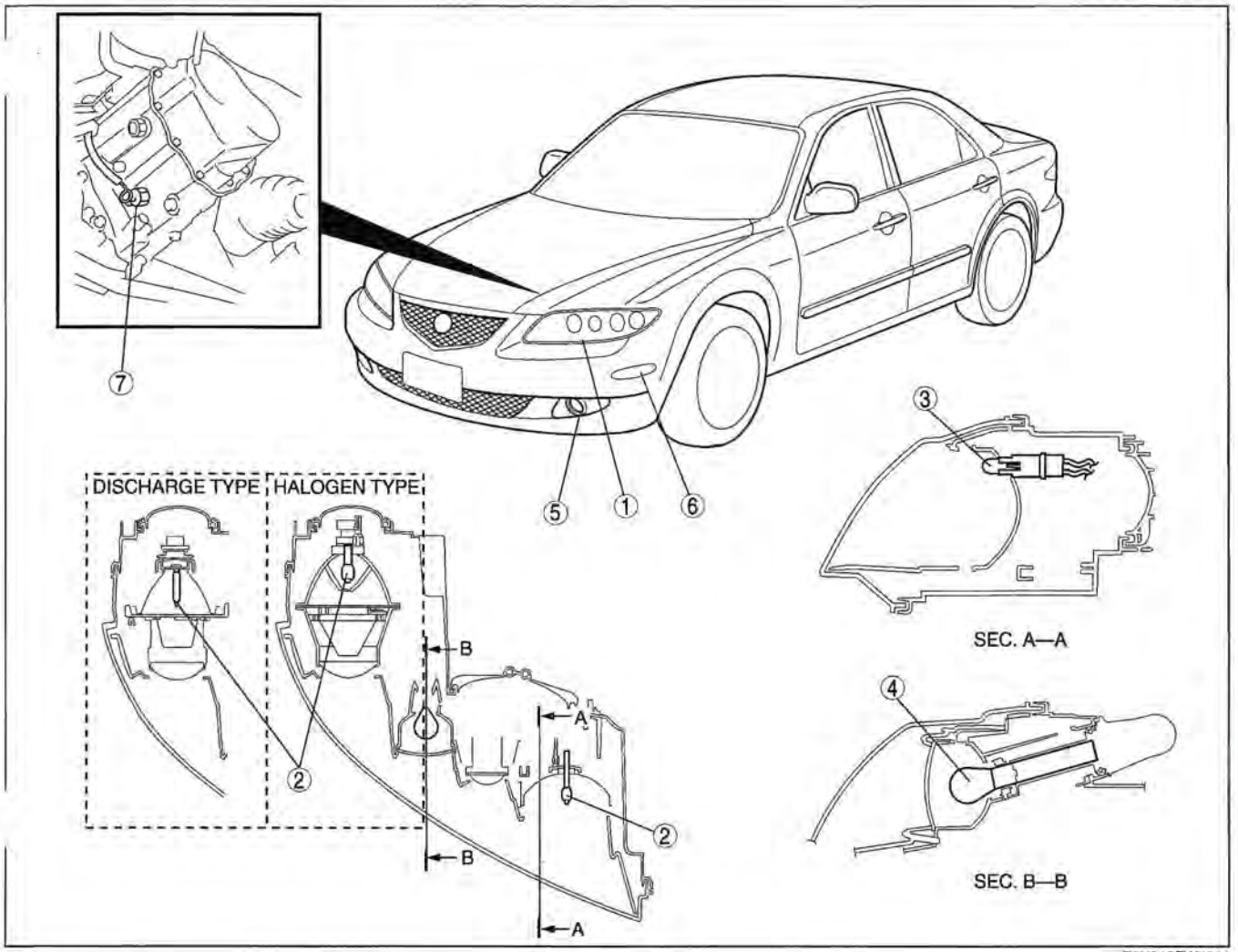

E6U918ZW5001

1	Front combination light (See 09–18–8 FRONT COMBINATION LIGHT REMOVAL/INSTALLATION.) (See 09–18–8 HEADLIGHT ADJUSTMENT.)
2	Headlight bulb (See 09–18–9 HEADLIGHT BULB REMOVAL/INSTALLATION.)
3	Parking light bulb (See 09–18–12 PARKING LIGHT BULB REMOVAL/INSTALLATION.)
4	Front turn light (See 09–18–12 FRONT TURN LIGHT REMOVAL/INSTALLATION.)

5	Front fog light bulb (See 09–18–13 FRONT FOG LIGHT REMOVAL/INSTALLATION.) (See 09–18–14 FRONT FOG LIGHT BULB REMOVAL/INSTALLATION.) (See 09–18–13 FRONT FOG LIGHT ADJUSTMENT.)
6	Front side marker light (See 09–18–13 FRONT SIDE MARKER LIGHT REMOVAL/INSTALLATION.)
7	Back-up light switch (See 09–18–19 BACK-UP LIGHT SWITCH REMOVAL/INSTALLATION [G35M-R].) (See 09–18–19 BACK-UP LIGHT SWITCH REMOVAL/INSTALLATION [L3 WITH TC].) (See 09–18–19 BACK-UP LIGHT SWITCH INSPECTION.)

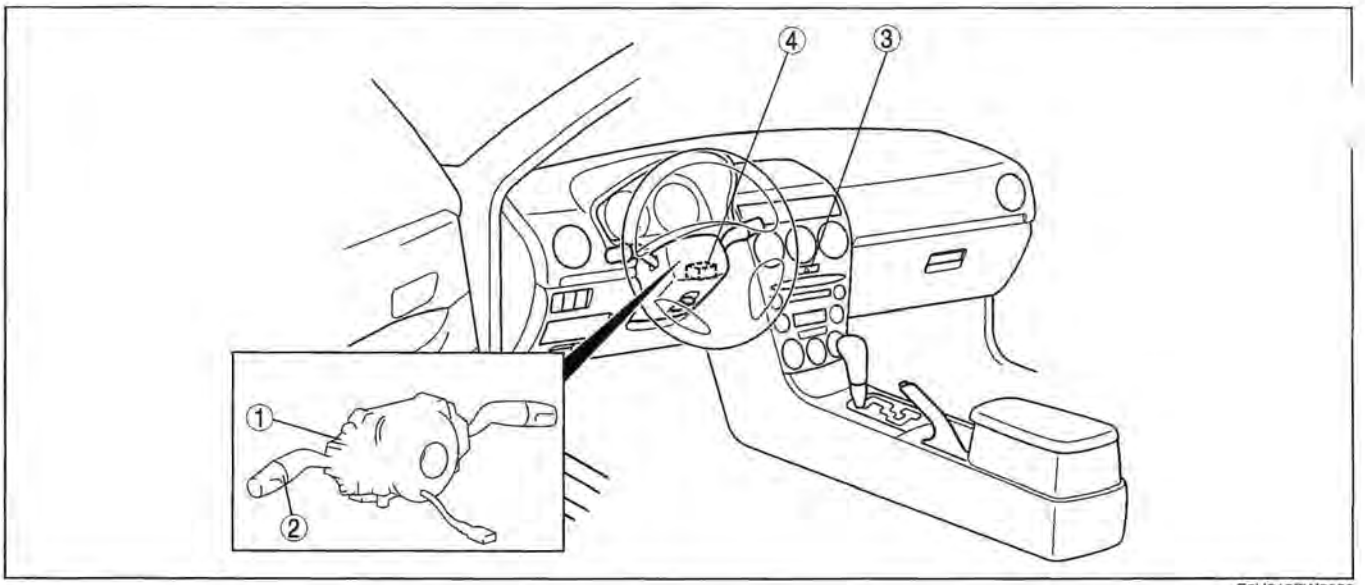

E6U918ZW5002

1	Combination switch (See 09–18–19 COMBINATION SWITCH REMOVAL/INSTALLATION.) (See 09–18–20 COMBINATION SWITCH DISASSEMBLY/ASSEMBLY.)
2	Light switch (See 09–18–21 LIGHT SWITCH REMOVAL/INSTALLATION.) (See 09–18–21 LIGHT SWITCH INSPECTION.) (See 09–18–22 FRONT FOG LIGHT SWITCH INSPECTION.)
3	Hazard warning switch (See 09–18–21 WARNING SWITCH INSPECTION.)
4	Auto light-off control module (See 09–18–23 AUTO LIGHT-OFF CONTROL MODULE REMOVAL/INSTALLATION.) (See 09–18–24 DRL AND AUTO LIGHT-OFF SYSTEM WIRING DIAGRAM.) (See 09–18–25 AUTO LIGHT-OFF CONTROL MODULE INSPECTION.)

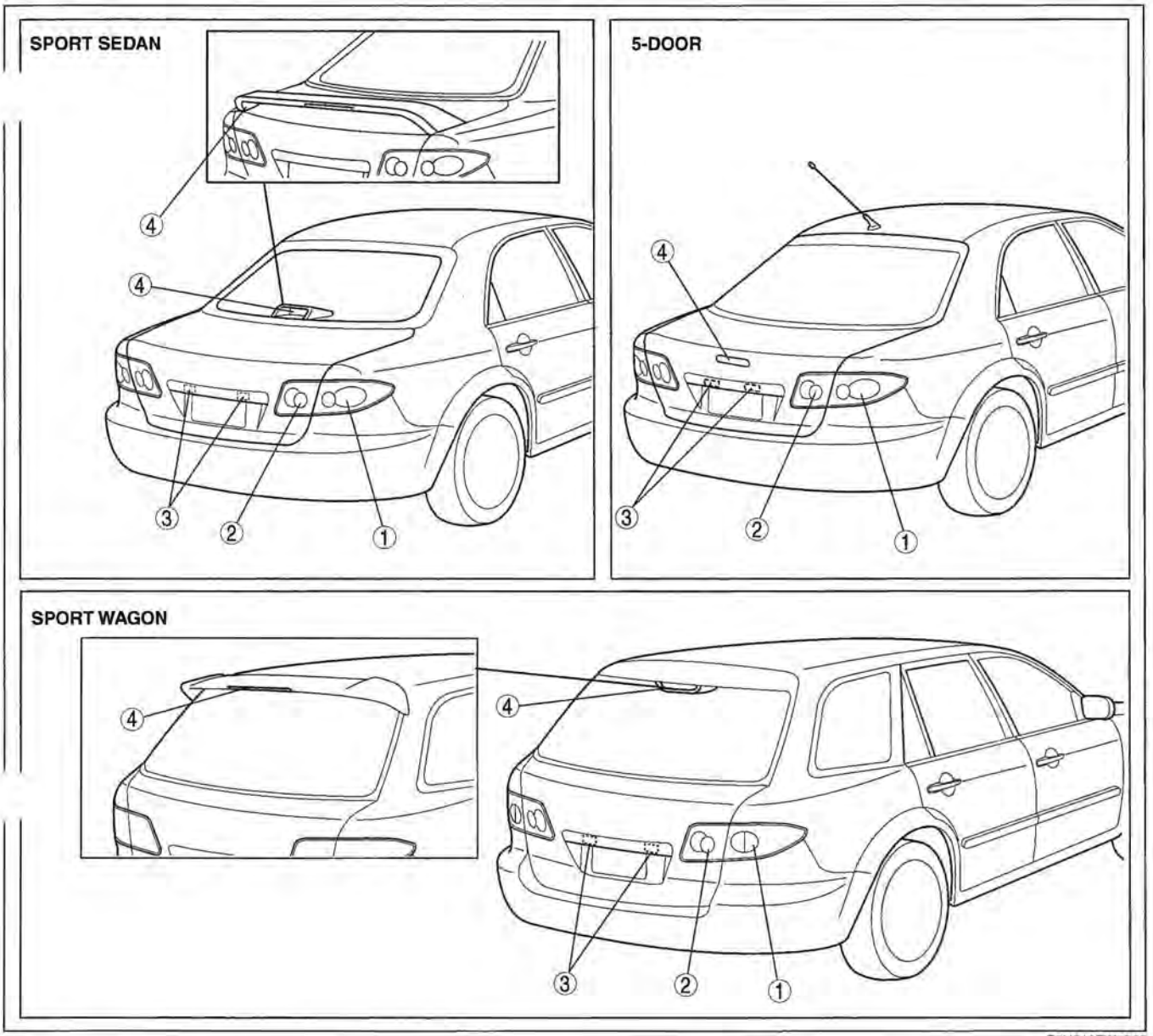

E6U918ZW5003

1	Rear combination light (See 09–18–14 REAR COMBINATION LIGHT REMOVAL/INSTALLATION.)
2	Inboard combination light (See 09–18–15 INBOARD COMBINATION LIGHT REMOVAL/INSTALLATION.)

3	License plate light (See 09–18–18 LICENSE PLATE LIGHT REMOVAL/INSTALLATION.)
4	High-mount brake light (See 09–18–16 HIGH-MOUNT BRAKE LIGHT REMOVAL/INSTALLATION [SPORT SEDAN].) (See 09–18–17 HIGH-MOUNT BRAKE LIGHT REMOVAL/INSTALLATION [5-DOOR, SPORT WAGON].)

INTERIOR LIGHTING SYSTEM LOCATION INDEX

E6U091800000W02

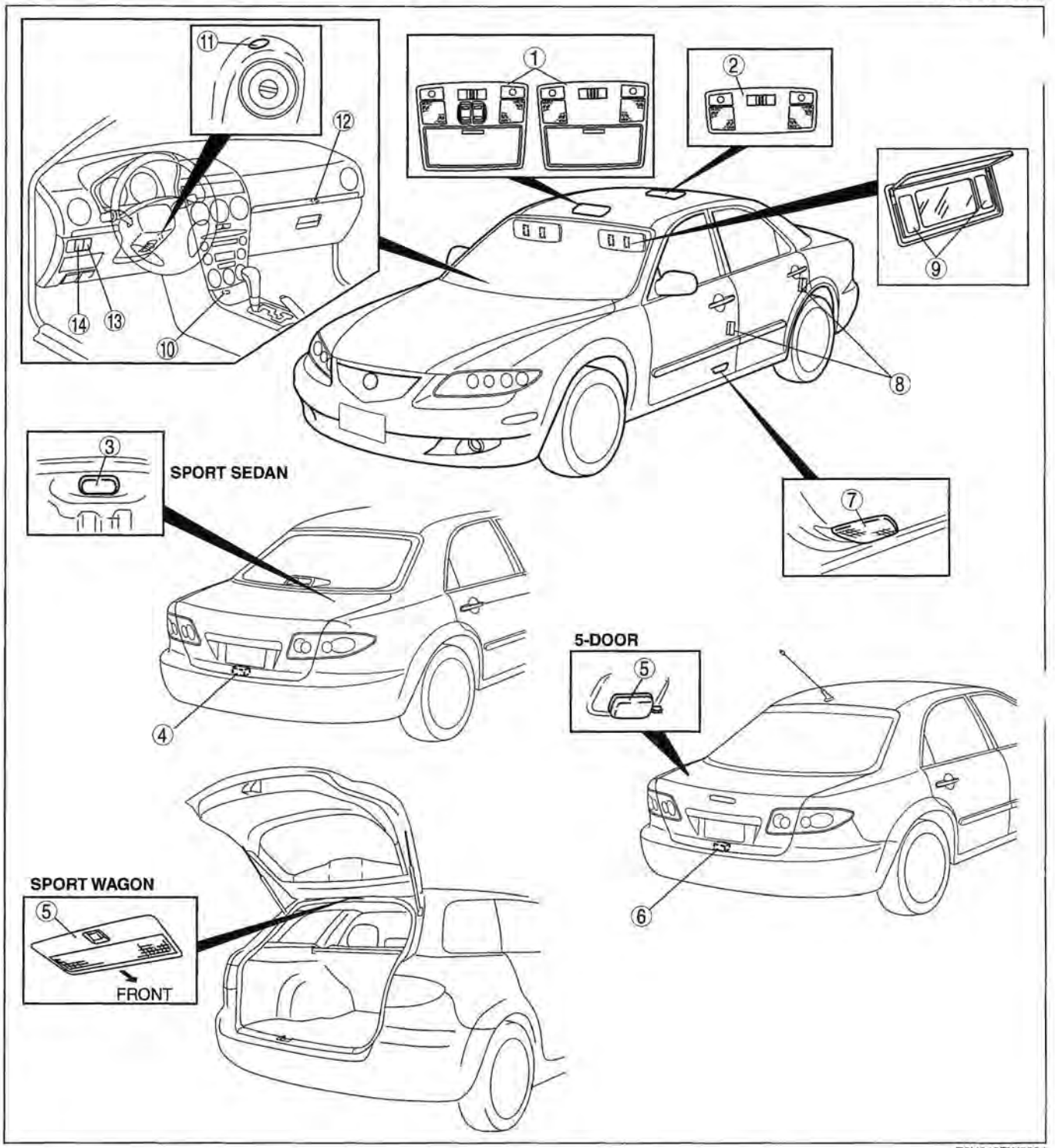

E6U918ZW5004

1	Front map light (See 09–18–27 FRONT MAP LIGHT REMOVAL/INSTALLATION.) (See 09–18–28 FRONT MAP LIGHT INSPECTION.)
2	Rear map light (See 09–18–28 REAR MAP LIGHT REMOVAL/INSTALLATION.) (See 09–18–29 REAR MAP LIGHT INSPECTION.)

3	Trunk compartment light (See 09–18–33 TRUNK COMPARTMENT LIGHT BULB REMOVAL/INSTALLATION [SPORT SEDAN].)
4	Trunk compartment light switch (See 09–18–34 TRUNK COMPARTMENT LIGHT SWITCH INSPECTION [SPORT SEDAN].)
5	Cargo compartment light (See 09–18–29 CARGO COMPARTMENT LIGHT REMOVAL/INSTALLATION [5-DOOR, SPORT WAGON].)

6	Cargo compartment light switch (See 09–18–31 CARGO COMPARTMENT LIGHT SWITCH INSPECTION [5-DOOR, SPORT WAGON].)
7	Courtesy light (See 09–18–33 COURTESY LIGHT BULB REMOVAL/INSTALLATION.)
8	Door switch (See 09–18–36 DOOR SWITCH REMOVAL/INSTALLATION.) (See 09–18–36 DOOR SWITCH INSPECTION.)
9	Vanity mirror illumination (See 09–18–32 VANITY MIRROR ILLUMINATION BULB REMOVAL/INSTALLATION.) (See 09–18–32 VANITY MIRROR ILLUMINATION INSPECTION.)
10	Ashtray illumination (See 09–18–31 ASHTRAY ILLUMINATION BULB REMOVAL/INSTALLATION.)
11	Ignition key illumination (See 09–18–31 IGNITION KEY ILLUMINATION BULB REMOVAL/INSTALLATION.)
12	Glove compartment light (See 09–18–33 GLOVE COMPARTMENT LIGHT BULB REMOVAL/INSTALLATION.)
13	Panel light control switch (See 09–18–34 PANEL LIGHT CONTROL SWITCH REMOVAL/INSTALLATION.) (See 09–18–34 PANEL LIGHT CONTROL SWITCH INSPECTION.)
14	Headlight leveling switch (See 09–18–22 HEADLIGHT LEVELING SWITCH REMOVAL/INSTALLATION.) (See 09–18–22 HEADLIGHT LEVELING SWITCH INSPECTION.)

DISCHARGE HEADLIGHT SERVICE WARNINGS

E6U091800000W03

Discharge Headlight Bulb Service Warnings

- **To prevent electrical shock when replacing the discharge headlight bulb, dry hands thoroughly, and carry out work in an area out of rain.**
- **When the light switch is on, approx. 25,000 V of high voltage passes through the discharge headlight bulb socket. Because of the danger of electrical shock, do not insert fingers or a tester.**
- **When the headlights are on, high voltage flows around the socket and bulb. When turning on the discharge headlights while working, always leave the headlights in the vehicle-installed condition to prevent electrical shock.**

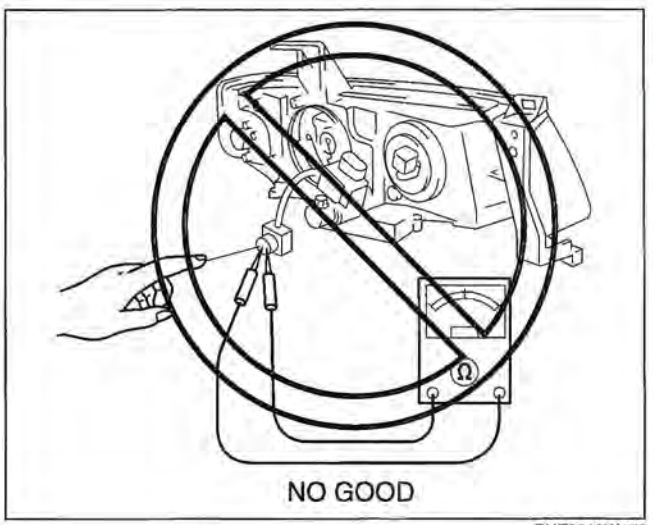

BHE0918W172

Discharge Headlight Control Module Service Warnings

- **Because of the danger of electrical shock, when inspecting with a tester, do not inspect the discharge headlight control module as a single unit or disassemble it.**

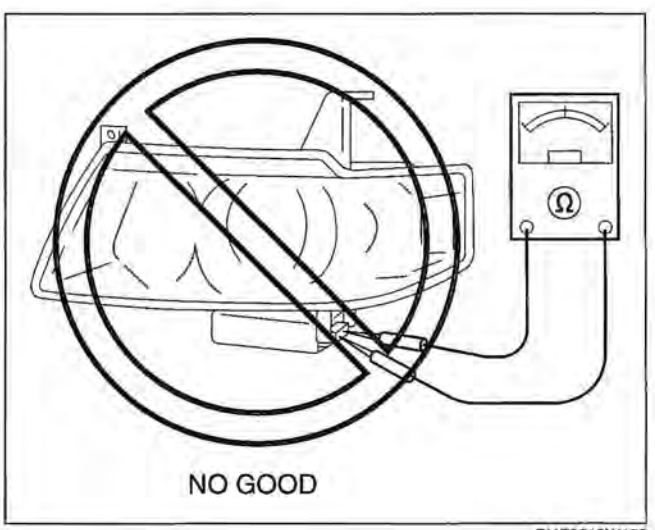

BHE0918W173

Discharge Headlight Control Module Reuse

- **If the discharge headlight control module is dented or damaged in any way, replace the module with a new one to prevent electrical shock and improper operation.**
- **Although the control module may temporarily operate normally even though it has received an impac' it is possible that the interior may have been damaged. When reusing the control module, inspect the following items regarding discharge headlight illumination to verify that there are no malfunctions.**
  - **— Verify that the discharge headlights illuminate normally by testing them several times under cold illumination (headlights off for approx. 10 min or more and then turned on) and hot illumination (headlights on for approx. 15 min or more, turned off for approx. 1 min, and then turned on again) conditions.**
  - **— Inspect the headlight illumination in the period from directly after cold illumination until they are uniformly illuminated (approx. 5 min) and verify that there is no flickering or inconsistent brightness.**
  - **— Turn on the headlights for approx. 30 min with normal condition bulbs and verify that there is no brightness difference between the right and left, and that illumination is consistent.**

FRONT COMBINATION LIGHT REMOVAL/INSTALLATION

E6U091851060W01

1. Disconnect the negative battery cable.
2. Remove the front bumper. (See 09–10–10 FRONT BUMPER REMOVAL/INSTALLATION.)
3. Remove in the order indicated in the table.

1	Connector
2	Bolt
3	Fastener
4	Front combination light

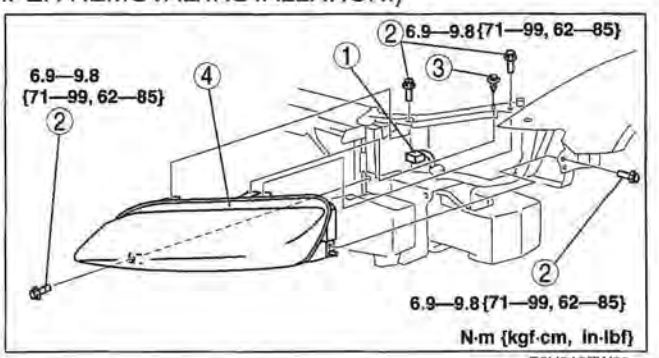

E6U918ZW5

4. Install in the reverse order of removal.
5. Adjust the headlight aiming. (See 09–18–8 HEADLIGHT ADJUSTMENT.)

HEADLIGHT ADJUSTMENT

E6U091851030W01

1. Adjust the tire air pressure to the specification.
2. Position the unloaded vehicle on a flat, level surface.
3. Seat one person in the driver's seat.
4. Position the vehicle straight ahead and perpendicular to a wall.
5. Set the headlights **3 m {10 ft}** from the white screen.
6. While adjusting one headlight, mask the other.
7. Start the engine to charge the battery.
8. Turn on the lower-beam headlight.

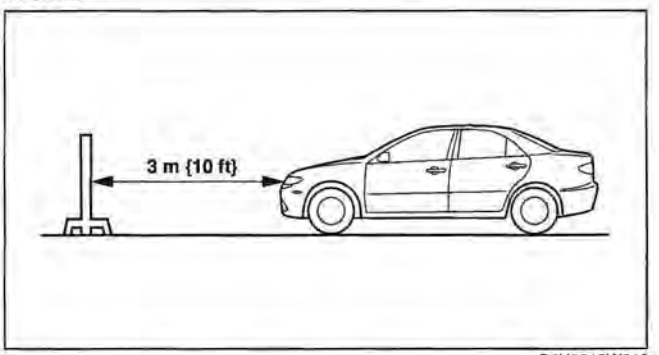

B6U0918W013

9. Adjust the headlights as shown in the figure.

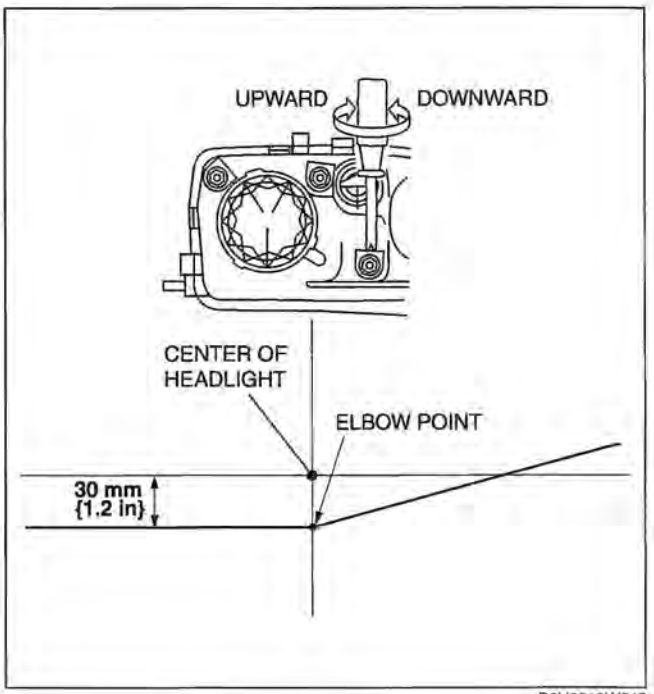

B6U0918W012

HEADLIGHT BULB REMOVAL/INSTALLATION

E6U091851030W02

Low-beam

Halogen type

1. Disconnect the negative battery cable.
2. Set the coolant reserve tank out of the way (RH).
3. Remove in the order indicated in the table.

1	Cover
2	Connector
3	Halogen headlight bulb (See 09–18–9 Halogen headlight bulb removal note)

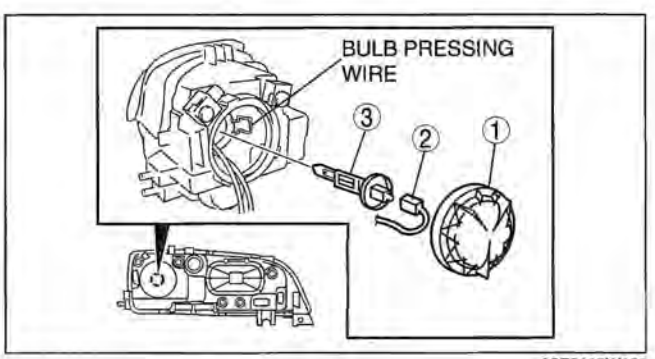

A6E8112W105

Caution

- **A halogen bulb generates extremely high heat when it is used. If the surface of the bulb is soiled, excessive heat will build up and the light's life will be shortened. When replacing the bulb, hold the metal flange, not the glass.**

4. Install in the reverse order of removal.

Halogen headlight bulb removal note

1. Release the bulb pressing wire to remove the Halogen headlight bulb.

Discharge type

Warning

- **Incorrect servicing of the discharge headlights could result in electrical shock. Before servicing the discharge headlights, always refer to the discharge headlight service warnings. (See 09–18–7 DISCHARGE HEADLIGHT SERVICE WARNINGS.)**

1. Disconnect the negative battery cable.
2. Set the coolant reserve tank out of the way (RH).

3. Remove in the order indicated in the table.

1	Cover
2	Connector
3	Bulb cover
4	Discharge headlight bulb

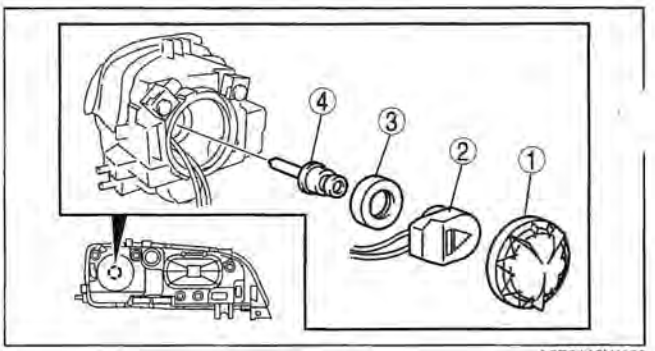

A6E8112W106

Caution
- **The bulb generates extremely high heat when it is illuminated. If the surface of the bulb is soiled, excessive heat will build up and the life of the bulb will be shortened. When replacing the bulb, hold the metal flange, not the glass.**

4. Install in the reverse order of removal.

High-beam
1. Disconnect the negative battery cable.
2. Set the air cleaner case out of the way (LH).(See 01–13A–4 INTAKE AIR SYSTEM REMOVAL/INSTALLATION [L3].)(See 01–13C–2 INTAKE AIR SYSTEM REMOVAL/INSTALLATION [AJ].)
3. Remove in the order indicated in the table.

1	Cover
2	Connector
3	Headlight bulb (See 09–18–10 Headlight bulb removal note)

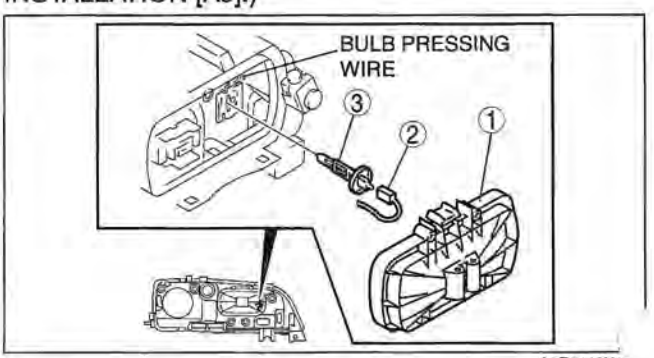

A6E8112W

Caution
- **A halogen bulb generates extremely high heat when it is used. If the surface of the bulb is soiled, excessive heat will build up and the light's life will be shortened. When replacing the bulb, hold the metal flange, not the glass.**

4. Install in the reverse order of removal.

Headlight bulb removal note
1. Release the bulb pressing wire to remove the headlight bulb.

DISCHARGE HEADLIGHT CONTROL MODULE REMOVAL/INSTALLATION

E6U091851030W04

Caution
- **Incorrect servicing of the discharge headlight control module could result in electrical shock. Before servicing the discharge headlight control module, always refer to the "Discharge headlight service warnings." (See 09–18–7 DISCHARGE HEADLIGHT SERVICE WARNINGS.)**

1. Disconnect the negative battery cable.
2. Remove the front bumper. (See 09–10–10 FRONT BUMPER REMOVAL/INSTALLATION.)
3. Remove the front combination light. (See 09–18–8 FRONT COMBINATION LIGHT REMOVAL/INSTALLATION.)
4. Remove in the order indicated in the table.

1	Bolt
2	Discharge headlight control module

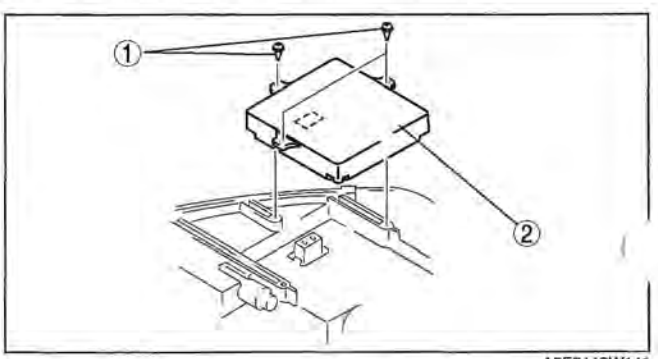

A6E8112W141

5. Install in the reverse order of removal.

DISCHARGE HEADLIGHT SYSTEM INSPECTION

E6U091851030W05

Discharge Headlight Inoperative

Warning

- **Incorrect servicing of the discharge headlights could result in electrical shock. Before servicing the discharge headlights, always refer to the discharge headlight service warnings. (See 09–18–7 DISCHARGE HEADLIGHT SERVICE WARNINGS.)**

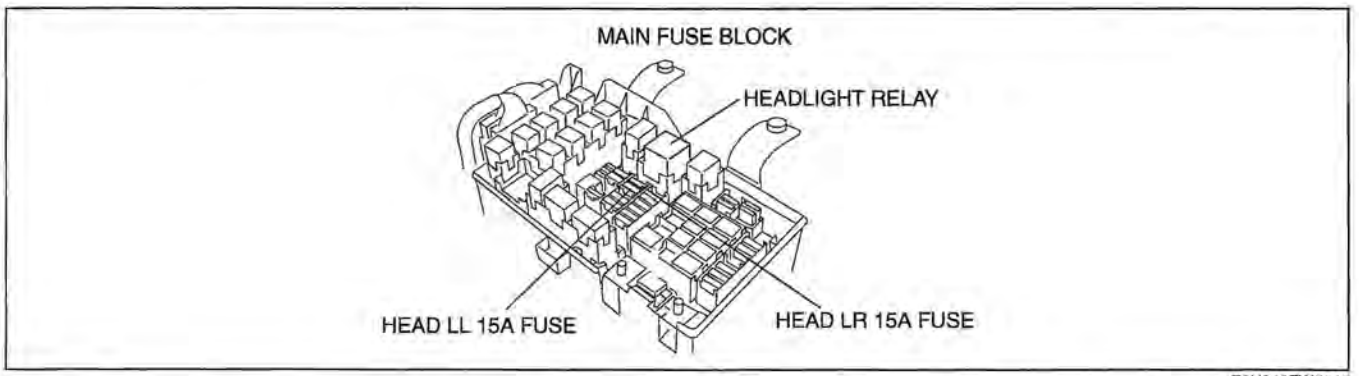

E6U918ZW5017

Inspection procedure

STEP	INSPECTION		ACTION
1	**INSPECT POWER SUPPLY CIRCUIT OF DISCHARGE HEADLIGHT CONTROL MODULE** • Disconnect the discharge headlight control module connector. • Turn the headlight switch to the HEADLIGHT (LO) position. • Measure the voltage at discharge headlight control module terminal D (wiring harness-side). • Is the voltage **approx. 12 V**?	Yes	Go to Step 6.
		No	Go to the next step.
2	**INSPECT FUSE** • Turn the headlight switch to the OFF position. • Remove the HEAD LR 15 A fuse (RH) or HEAD LL 15 A fuse (LH). • Inspect the fuses. • Are the fuses normal?	Yes	Go to the next step.
		No	Replace the fuse.
3	**INSPECT HEADLIGHT LOW RELAY** • Inspect the headlight relay. (See 09–21–7 RELAY INSPECTION.) • Is the headlight relay normal?	Yes	Go to the next step.
		No	Replace the headlight relay. (See 09–21–7 RELAY INSPECTION.)
4	**INSPECT LIGHT SWITCH** • Inspect the light switch. (See 09–18–21 LIGHT SWITCH INSPECTION.) • Is the light switch normal?	Yes	Go to the next step.
		No	Replace the light switch. (See 09–18–21 LIGHT SWITCH REMOVAL/INSTALLATION.)
5	**INSPECT WIRING HARNESS BETWEEN BATTERY AND DISCHARGE HEADLIGHT CONTROL MODULE** • Disconnect the negative battery cable. • Inspect for continuity between the following terminals: — Battery (positive terminal) and headlight relay terminal E. — HEAD LR 15 A fuse (RH) and discharge headlight control module terminal D — HEAD LL 15 A fuse (LH) discharge headlight control module terminal D • Are the wiring harnesses normal?	Yes	Go to the next step.
		No	Replace the related wiring harness.

STEP	INSPECTION		ACTION
6	**INSPECT WIRING HARNESS BETWEEN DISCHARGE HEADLIGHT CONTROL MODULE AND GROUND** • Inspect the wiring harness between discharge headlight control module terminal E and ground for the following: — Short to power supply — Open circuit • Is the wiring harness normal?	Yes	Go to the next step.
		No	Replace the related wiring harness.
7	**VERIFY WHETHER MALFUNCTION IS IN DISCHARGE HEADLIGHT BULB OR DISCHARGE HEADLIGHT CONTROL MODULE** • Install the discharge headlight low bulb (previously verified as illuminating normally). (See 09–18–9 HEADLIGHT BULB REMOVAL/INSTALLATION.) • Connect the discharge headlight control module connector. • Turn the headlight switch to the HEADLIGHT (LO) position. • Does the headlight (low-beam) illuminate?	Yes	System inspection completed.
		No	Replace the discharge headlight control module. (See 09–18–10 DISCHARGE HEADLIGHT CONTROL MODULE REMOVAL/INSTALLATION.)

PARKING LIGHT BULB REMOVAL/INSTALLATION

E6U091851040W01

1. Disconnect the negative battery cable.
2. Set the air cleaner case out of the way (LH).(See 01–13A–4 INTAKE AIR SYSTEM REMOVAL/INSTALLATION [L3].)(See 01–13C–2 INTAKE AIR SYSTEM REMOVAL/INSTALLATION [AJ].)
3. Remove in the order indicated in the table.

1	Cover
2	Socket
3	Parking light bulb

4. Install in the reverse order of removal.

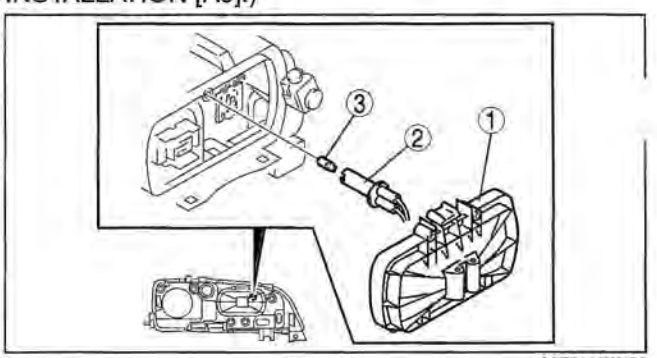

A6E8112W109

FRONT TURN LIGHT REMOVAL/INSTALLATION

E6U091851050W01

1. Disconnect the negative battery cable.
2. Remove in the order indicated in the table.

1	Socket
2	Front turn light bulb

3. Install in the reverse order of removal.

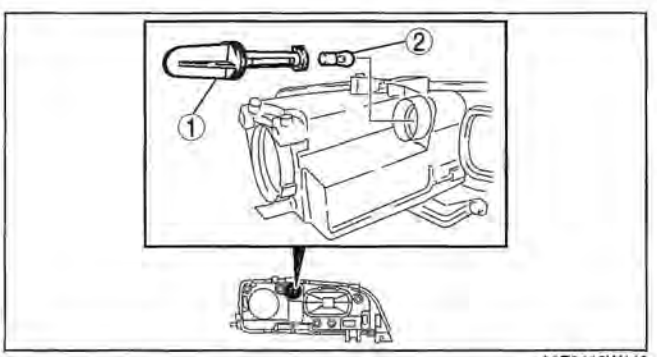

A6E8112W110

FRONT SIDE MARKER LIGHT REMOVAL/INSTALLATION

E6U091851120W01

1. Disconnect the negative battery cable.
2. Partially peel off the mud guard.
   Remove in the order indicated in the table.

1	Front side marker light (See 09–18–13 Front Side Marker Light Removal Note)
2	Connector
3	Socket
4	Front side marker light bulb

4. Install in the reverse order of removal.

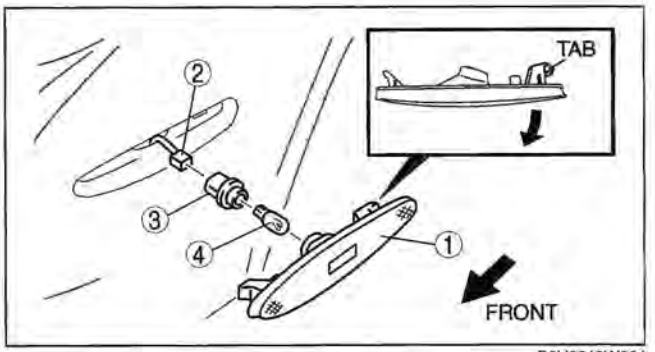

B6U0918W024

Front Side Marker Light Removal Note

1. Insert your hand into where the mud guard is bent back and push the tab to remove the front side marker light.
2. Pull the front side marker light toward you to remove it.

FRONT FOG LIGHT REMOVAL/INSTALLATION

E6U091851680W03

1. Disconnect the negative battery cable.
2. Remove the front bumper (RH).(See 09–10–10 FRONT BUMPER REMOVAL/INSTALLATION.)
3. Remove the fasteners, then slightly bend back the mudguard (LH).
4. Remove in the order indicated in the table.

1	Connector
2	Screw
3	Bolt
4	Front fog light

5. Install in the reverse order of removal.
6. Adjust the front fog light aiming.(See 09–18–13 FRONT FOG LIGHT ADJUSTMENT.)

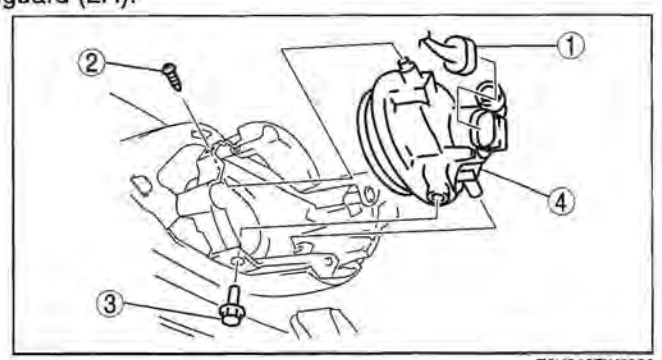

E6U918ZW5023

FRONT FOG LIGHT ADJUSTMENT

E6U091851680W01

1. Adjust the tire air pressure to the specification.
2. Position the unloaded vehicle on a flat, level surface.
3. Seat one person in the driver's seat.
4. Position the vehicle **3 m {10 ft}** in front of a white screen.
5. While adjusting one fog light, mask the other.
6. Start the engine to charge the battery.
7. Turn the front fog light on.

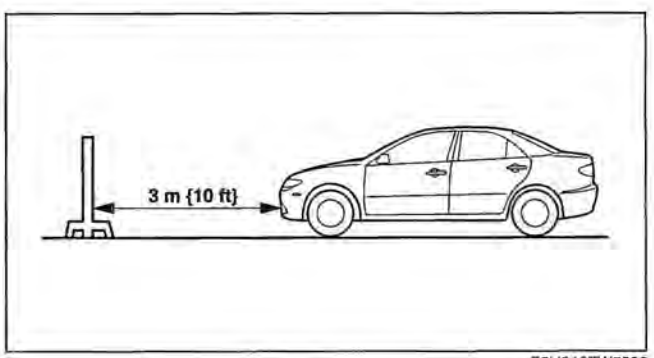

E6U918ZW5008

8. Loosen the screw and the bolt, move the front fog light in the direction of the arrows,and adjust the front fog light beam to the position shown in the figure.
9. Tighten the bolt, then tighten the screw.

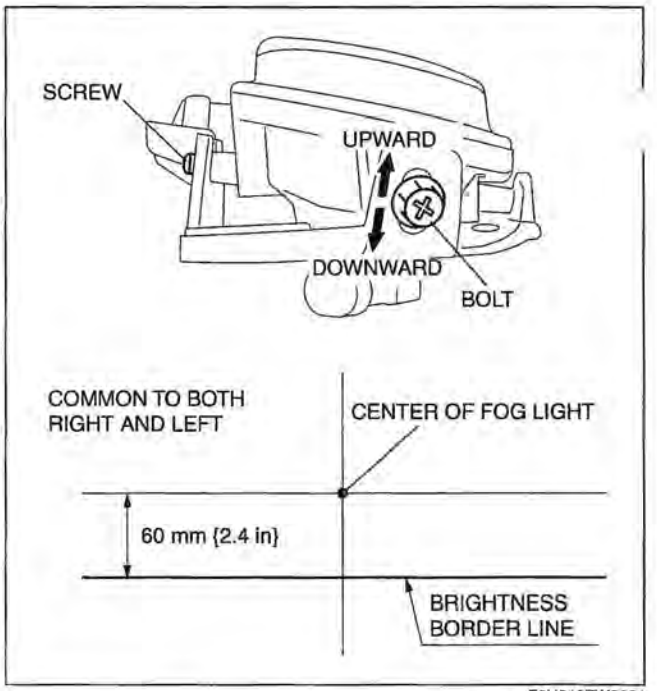

E6U918ZW5021

FRONT FOG LIGHT BULB REMOVAL/INSTALLATION

E6U091851680W02

1. Disconnect the negative battery cable.
2. Remove the fasteners, then slightly bend back the mudguard.
3. Remove in the order indicated in the table.

1	Connector
2	Socket
3	Front fog light bulb

Caution

- **A halogen bulb generates extremely high heat when it is used. If the surface of the bulb is soiled, excessive heat will build up and the light's life will be shortened. When replacing the bulb, hold the metal flange, not the glass.**

4. Install in the reverse order of removal.

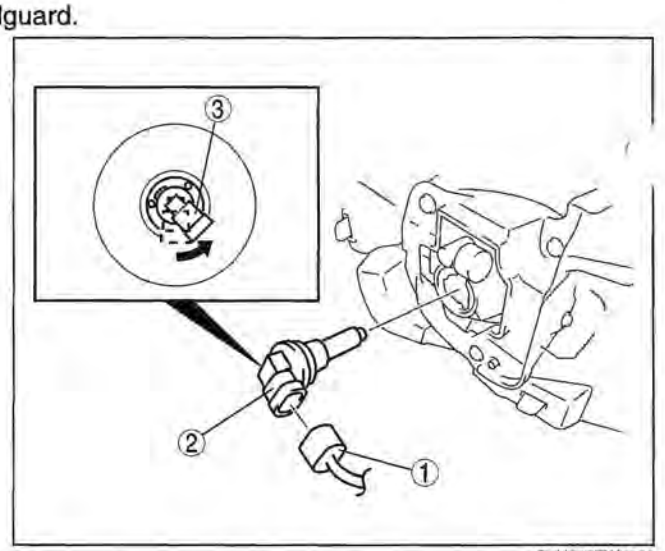

E6U918ZW5020

REAR COMBINATION LIGHT REMOVAL/INSTALLATION

E6U091851150W01

1. Disconnect the negative battery cable.
2. Remove the trunk side trim.(Sport Sedan)(See 09–17–17 TRUNK SIDE TRIM REMOVAL/INSTALLATION.)
3. Remove in the order indicated in the table.

1	Connector
2	Nut
3	Rear combination light
4	Socket
5	Rear turn light bulb
6	Brake light/taillight bulb

4. Install in the reverse order of removal.

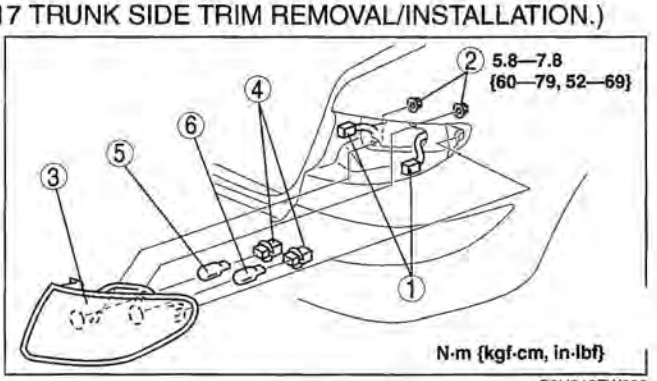

C6U918ZW003

REAR COMBINATION LIGHT BULB REMOVAL/INSTALLATION [5-DOOR, SPORT WAGON]

E6U091851150W02

1. Disconnect the negative battery cable.
2. Turn over the service hole cover.
   Remove in the order indicated in the table.

1	Connector
2	Socket
3	Brake/taillight bulb
4	Rear turn light bulb (Sport Wagon)

4. Install in the reverse order of removal.

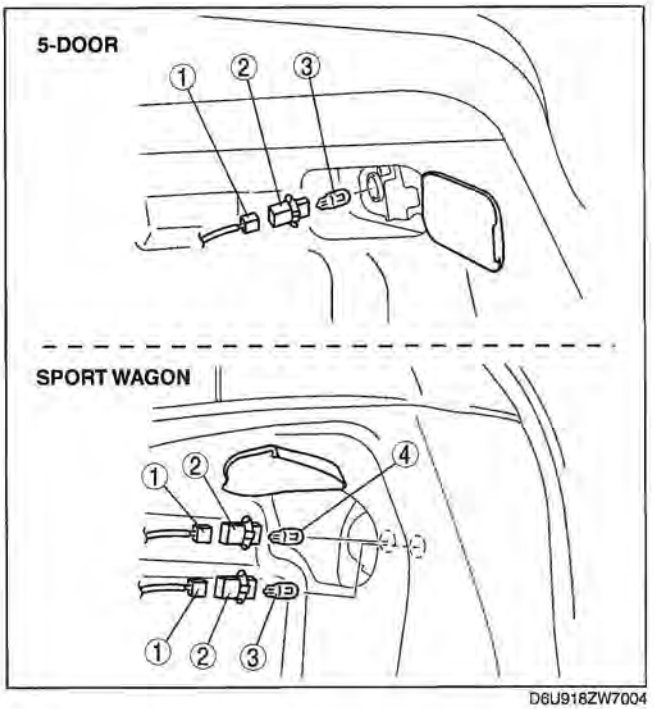

D6U918ZW7004

INBOARD COMBINATION LIGHT REMOVAL/INSTALLATION

E6U091851360W01

1. Disconnect the negative battery cable.
2. Remove the trunk lid trim. (See 09–17–20 TRUNK LID TRIM REMOVAL/INSTALLATION [SPORT SEDAN].)
   Remove in the order indicated in the table.

1	Connector
2	Nut
3	Inboard combination light (See 09–18–15 Inboard Combination Light Installation Note)
4	Socket
5	Back-up light bulb
6	Taillight bulb

4. Install in the reverse order of removal.

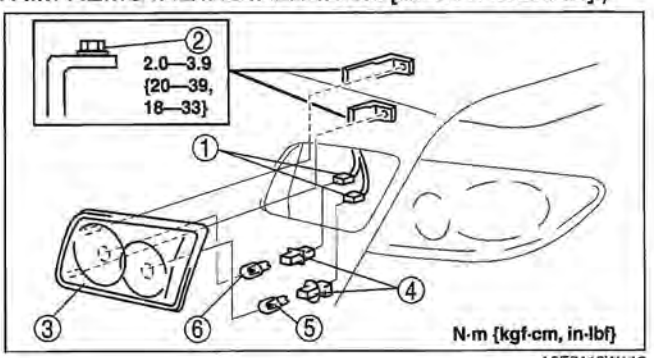

A6E8112W119

Inboard Combination Light Installation Note

1. Insert the inboard combination light into the trunk lid as shown in the figure, then pivot it inward and fix in place.

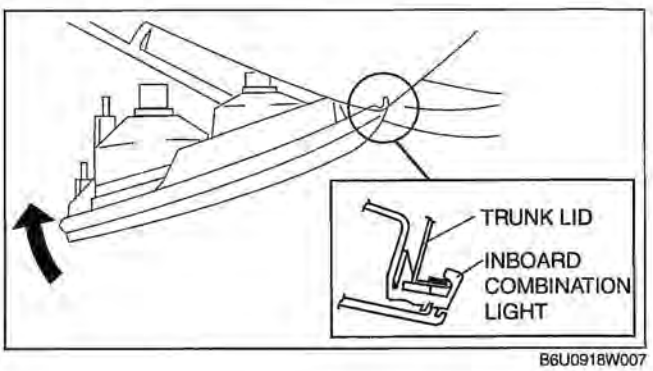

B6U0918W007

2. Place the bracket in the proper position as shown in the figure and press it to the trunk lid to attach.

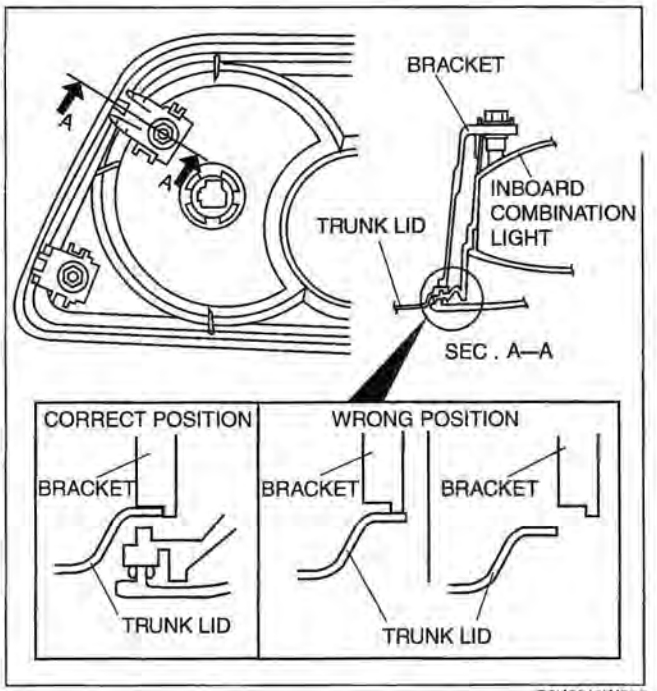

B6U0918W006

HIGH-MOUNT BRAKE LIGHT REMOVAL/INSTALLATION [SPORT SEDAN]

E6U091851580W01

In-Vehicle-Type

1. Disconnect the negative battery cable.
2. Remove in the order indicated in the table.

1	Connector
2	High-mount brake light
3	Socket
4	High-mount brake light bulb

3. Install in the reverse order of removal.

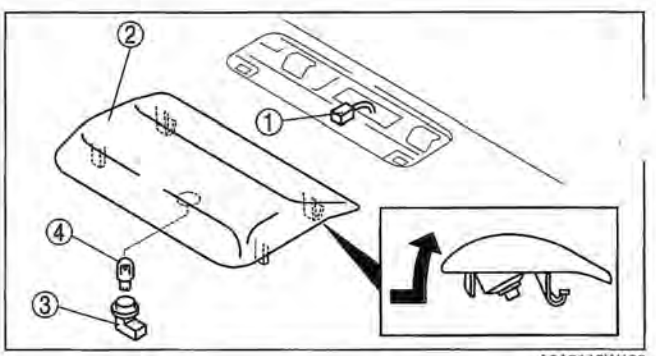

A6A8112W123

Rear Spoiler Type

1. Disconnect the negative battery cable.
2. Remove the rear spoiler. (See 09–16–8 REAR SPOILER REMOVAL/INSTALLATION.)
3. Remove in the order indicated in the table.

1	Bolt
2	High-mount brake light (See 09–18–17 High-mount brake light removal note)

4. Install in the reverse order of removal.

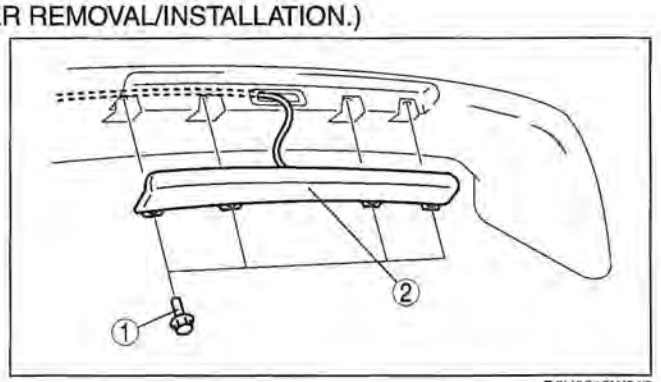

B6U0918W017

High-mount brake light removal note

1. Tie a string to the end of the high-mount brake light connector beforehand so that the connector can be passed easily through the rear spoiler during installation.

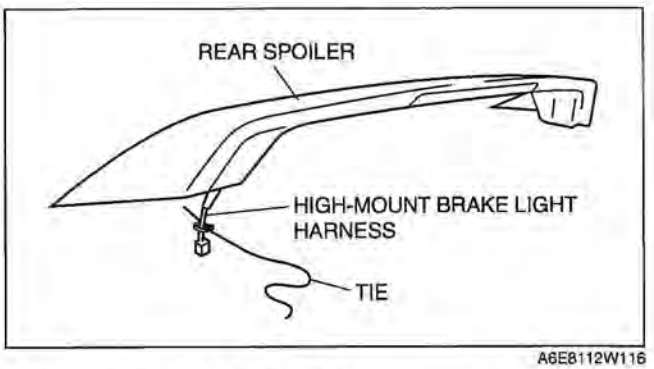

A6E8112W116

HIGH-MOUNT BRAKE LIGHT REMOVAL/INSTALLATION [5-DOOR, SPORT WAGON]

E6U091851580W02

5-Door

1. Disconnect the negative battery cable.
2. Remove the liftgate lower trim. (See 09–17–23 LIFTGATE LOWER TRIM REMOVAL/INSTALLATION [5-DOOR, SPORT WAGON])
3. Remove in the order indicated in the table.

1	Connector
2	Nut
3	High-mount brake light
4	Lens
5	Socket
6	High-mount brake light bulb

4. Install in the reverse order of removal.

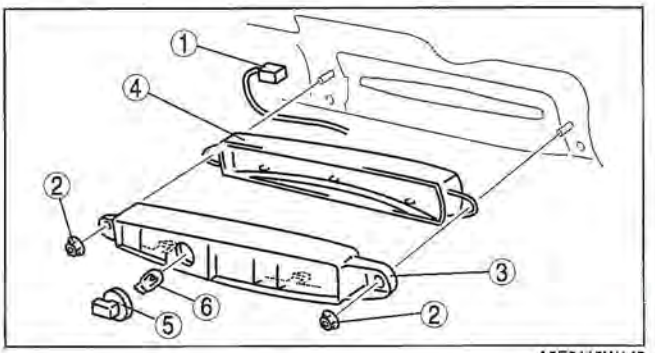

A6E8112W142

Sport Wagon
In-vehicle-type

1. Disconnect the negative battery cable.
2. Remove the liftgate upper trim.
3. Remove in the order indicated in the table.

1	Connector
2	Socket
3	High-mount brake light bulb
4	High-mount brake light

4. Install in the reverse order of removal.

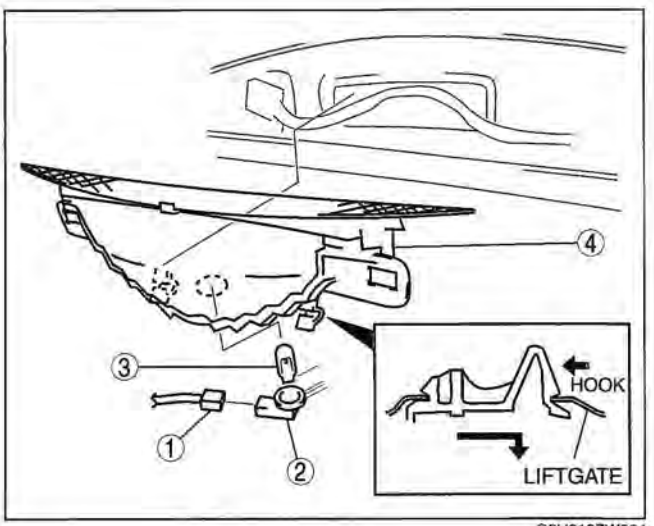

C6U918ZW004

Rear spoiler type

1. Disconnect the negative battery cable.
2. Remove the rear spoiler.
3. Remove in the order indicated in the table.

1	Bolt
2	Cover
3	Connector
4	High-mount brake light

4. Install in the reverse order of removal.

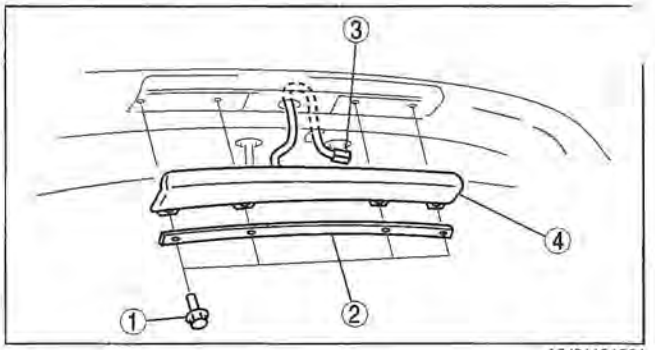

A6J81121004

HIGH-MOUNT BRAKE LIGHT REMOVAL/INSTALLATION [L3 WITH TC]

E6U091851580W03

1. Disconnect the negative battery cable.
2. Remove the rear spoiler. (See 09–16–8 REAR SPOILER REMOVAL/INSTALLATION.)
3. Remove in the order indicated in the table.

1	Nut
2	Bracket
3	Screw
4	High-mount brake light

4. Install in the reverse order of removal.

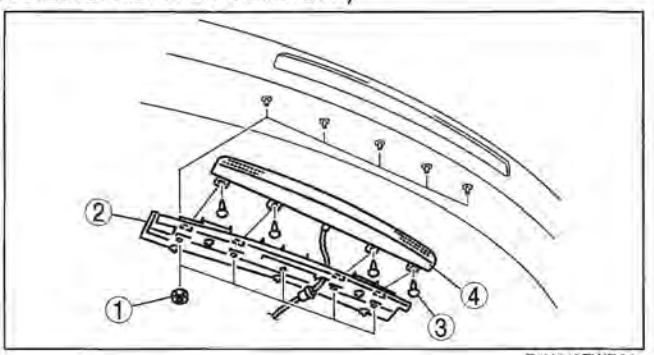

E6U918ZWB0

LICENSE PLATE LIGHT REMOVAL/INSTALLATION

E6U091851270W01

1. Disconnect the negative battery cable.
2. Remove the rear finisher. (See 09–16–7 REAR FINISHER REMOVAL/INSTALLATION.)
3. Remove in the order indicated in the table.

1	Connector
2	License plate light
3	Lens
4	License plate light bulb

4. Install in the reverse order of removal.

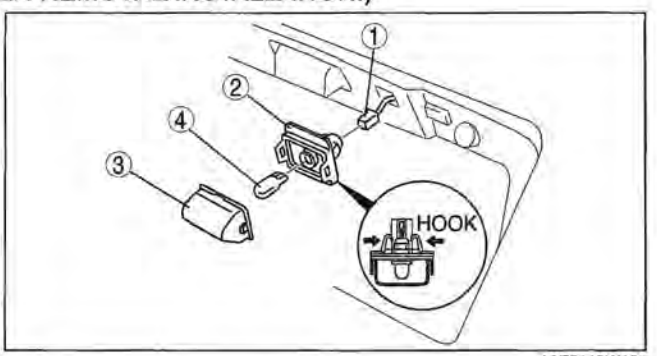

A8E8112W108

BACK-UP LIGHT SWITCH REMOVAL/INSTALLATION [G35M-R]

E6U091817640W01

1. Disconnect the negative battery cable.
2. Drain the oil.(See05–15A–2 TRANSAXLE OIL REPLACEMENT [G35M-R].)
   Remove in the order indicated in the table.

1	Connector
2	Back-up light switch

4. Install in the reverse order of removal.
5. Refill the oil.(See05–15A–2 TRANSAXLE OIL REPLACEMENT [G35M-R].)

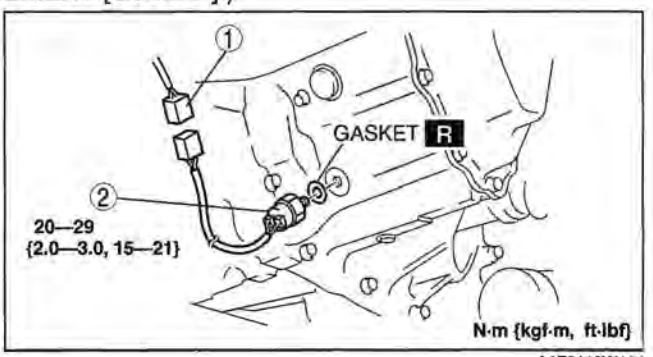

A6E8112W104

BACK-UP LIGHT SWITCH REMOVAL/INSTALLATION [L3 WITH TC]

E6U091817640W03

1. Disconnect the negative battery cable.
2. Remove in the order indicated in the table.

1	Connector
2	Back-up light switch

3. Install in the reverse order of removal.

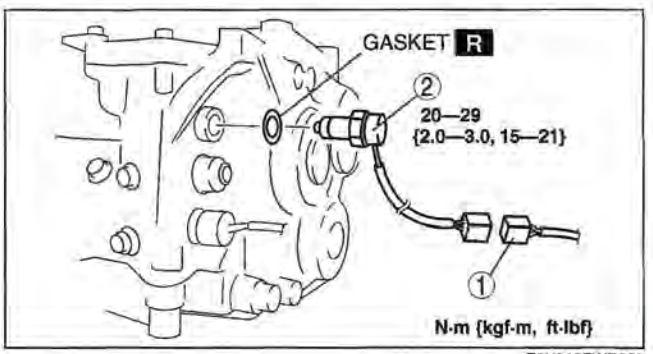

E6U918ZWB009

09–18

CK-UP LIGHT SWITCH INSPECTION

E6U091817640W02

1. Disconnect the back-up light switch connector.
2. Inspect for continuity between the back-up light switch terminals using an ohmmeter.
   - If not as specified, replace the back-up light switch.

O—O : Continuity

Shift lever position	Terminal	
	A	B
Reverse	O	O
Other		

A6E8112W128

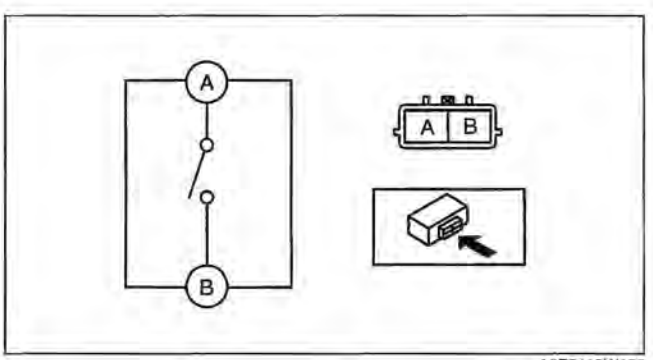

A6E8112W153

COMBINATION SWITCH REMOVAL/INSTALLATION

E6U091866120W03

1. Disconnect the negative battery cable.
2. Remove the driver-side air bag module. (See 08–10–6 DRIVER-SIDE AIR BAG MODULE REMOVAL/INSTALLATION.)
3. Remove the steering wheel. (See 06–12–7 STEERING WHEEL AND COLUMN REMOVAL/INSTALLATION.)
4. Remove the column cover. (See 09–17–6 COLUMN COVER REMOVAL/INSTALLATION.)

Caution

- **The clock spring is generally not to be removed from the combination switch as may result in a malfunction of the steering angle sensor. However, remove it only when replacing the clock spring as a single unit by referring to CLOCK SPRING REMOVAL/INSTALLATION. (See 08–10–15 CLOCK SPRING REMOVAL/INSTALLATION.)**

5. Remove in the order indicated in the table.

1	Connector
2	Screw
3	Combination switch

6. Install in the reverse order of removal.

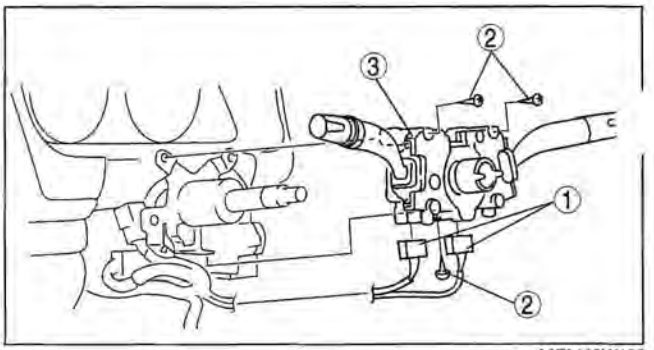

A6E8112W102

COMBINATION SWITCH DISASSEMBLY/ASSEMBLY

E6U091866120W04

Caution

- **The clock spring is generally not to be removed from the combination switch as may result in a malfunction of the steering angle sensor. However, remove it only when replacing the clock spring as a single unit by referring to CLOCK SPRING REMOVAL/INSTALLATION. (See 08–10–15 CLOCK SPRING REMOVAL/INSTALLATION.)**

1. Disassemble in the order indicated in the table.
2. Assemble in the reverse order of disassembly.

1	Screw
2	Wiper and washer switch
3	Light switch
4	Body

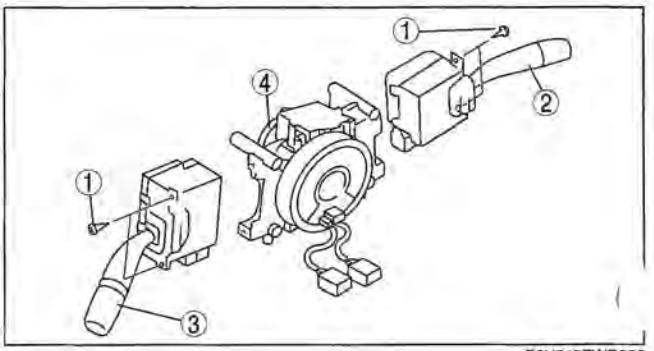

E6U918ZWB020

STEERING ANGLE SENSOR INSPECTION

E6U091866120W05

1. Disconnect the steering angle sensor connector.
2. Connect battery positive voltage to terminal A and ground to terminal F of the steering angle sensor.
3. Turn the steering wheel to the right and left, and verify that the voltage and pulses at the terminals are as shown in the figure.
   - If there is any malfunction, replace the body of the combination switch.

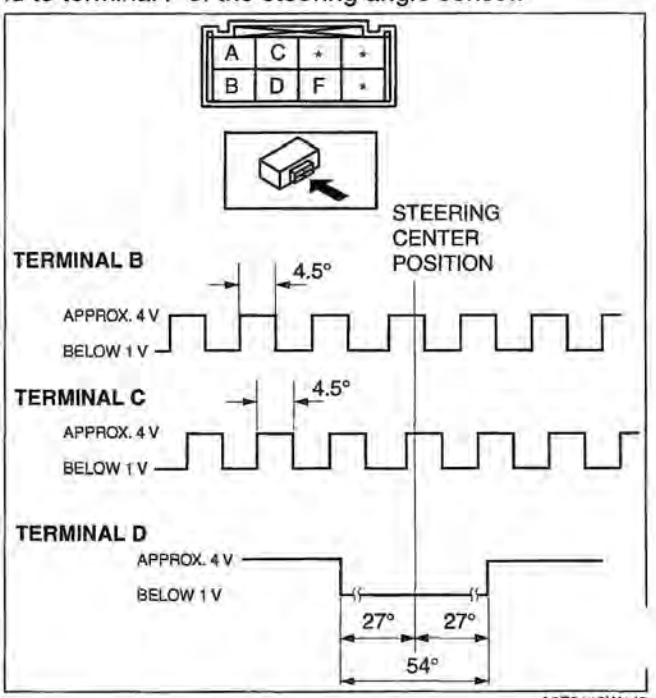

A6E6112W143

LIGHT SWITCH REMOVAL/INSTALLATION

E6U091866121W01

1. Disconnect the negative battery cable.
2. Remove the column cover.(See 09–17–6 COLUMN COVER REMOVAL/INSTALLATION.)
   Remove in the order indicated in the table.

1	Connector
2	Screw
3	Light switch

4. Install in the reverse order of removal.

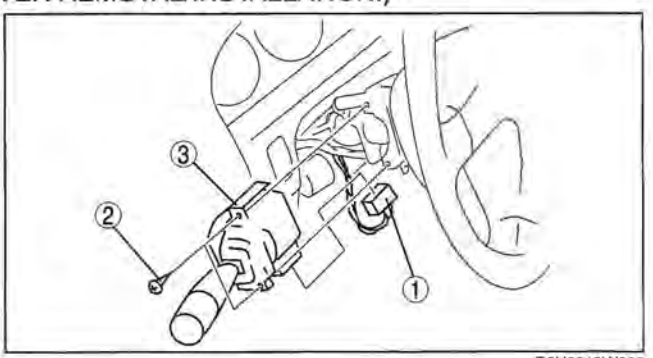

B6U0918W009

LIGHT SWITCH INSPECTION

E6U091866121W02

1. Inspect for continuity between the light switch terminals using an ohmmeter.
   - If not as specified, replace the light switch.

Headlight switch

O—O : Continuity

Switch position			Terminal					
Light	Dimmer	Flash-to-pass	J	L	P	Q	O	R
OFF	-	Off						
		On			O	O	O	
TNS	-	Off		O	O			
		On		O	O	O	O	
Head-light	LO	Off	O	O	O			O
		On	O	O	O	O	O	
	HI	-	O	O	O		O	

B6U0918W210

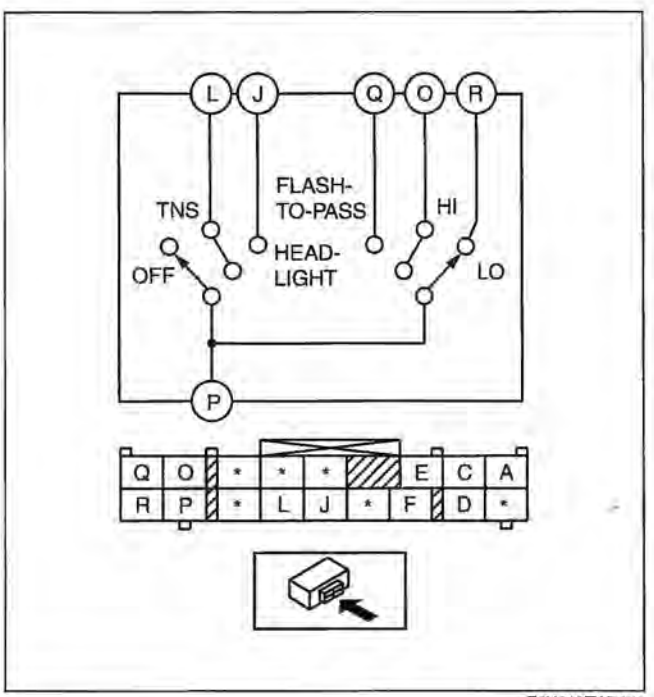

E6U918ZW7100

Turn switch

O—O : Continuity

Switch position	Terminal		
	C	A	E
Left	O	O	
Off			
Right	O		O

A6E8112W130

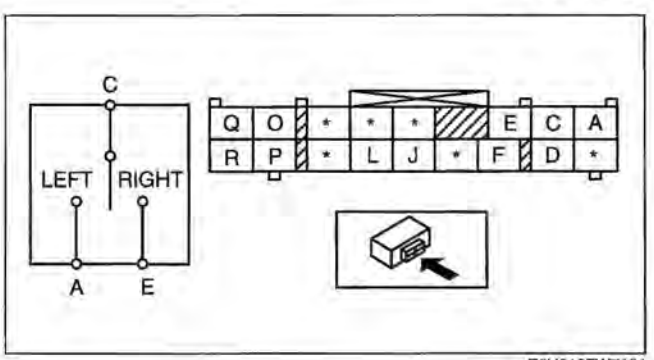

E6U918ZW7101

WARNING SWITCH INSPECTION

E6U091866401W01

Inspect the hazard warning switch. (See 07–40–33 CLIMATE CONTROL UNIT INSPECTION [L3, AJ].)(See 07–40–39 CLIMATE CONTROL UNIT INSPECTION [L3 WITH TC].)

FRONT FOG LIGHT SWITCH INSPECTION

1. Inspect for continuity between the light switch terminals using an ohmmeter.
   - If not as specified, replace the light switch.

O—O : Continuity

Switch position	Terminal	
	D	P
Off		
On	O	O

B6U0918W600

E6U091866402W01

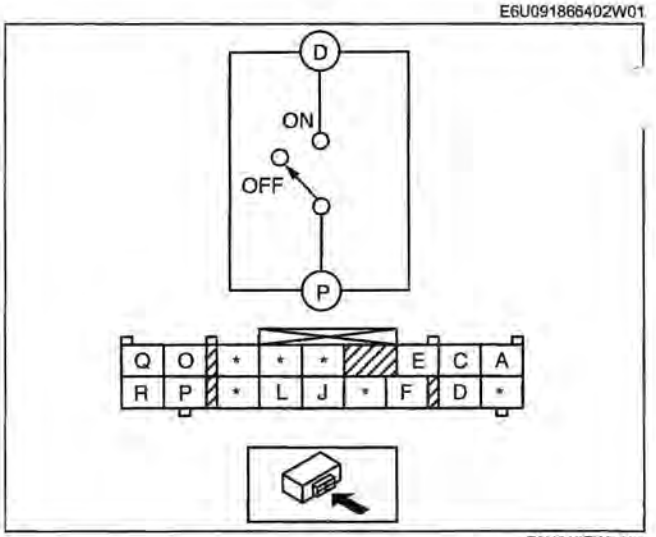

E6U918ZW7102

HEADLIGHT LEVELING SWITCH REMOVAL/INSTALLATION

E6U091866610W01

1. Disconnect the negative battery cable.
2. Remove in the order indicated in the table.

1	Headlight leveling switch (See 09–18–22 Headlight Leveling Switch Removal Note)
2	Connector

3. Install in the reverse order of removal.

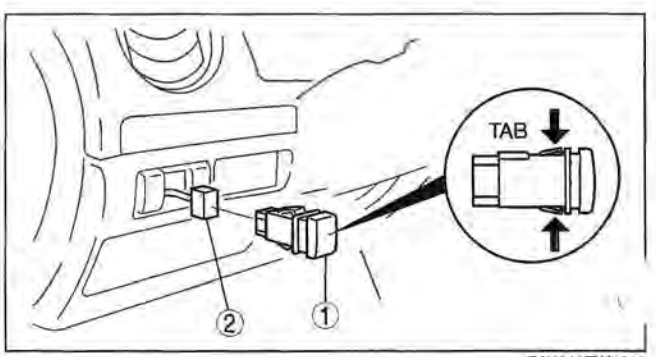

E6U918ZW5014

Headlight Leveling Switch Removal Note

1. Insert your hand from the lower side of the dashboard and squeeze the tabs of the panel light control switch.
2. Pull the panel light control switch toward you to remove it.

HEADLIGHT LEVELING SWITCH INSPECTION

1. Verify that continuity between the headlight leveling switch terminals is as indicated in the table.
   - If not as indicated in the table, replace the headlight leveling switch.

O-WW-O : Resistance O-(0)-O : Bulb

Switch position	Terminal				
	E	C	D	B	A
0	O-WW-O-WW-O (R_1 R_2)			O-(0)-O	
1	O-WW-O-WW-O (R_1 R_3)			O-(0)-O	
2	O-WW-O-WW-O (R_1 R_4)			O-(0)-O	
3	O-WW-O-WW-O (R_1 R_5)			O-(0)-O	

R_1 : 966–986 ohms R_2 : 1900–2100 ohms
R_3 : 966–986 ohms R_4 : 532–588 ohms
R_5 : 190–210 ohms

DPE918ZW1045

E6U091866610W02

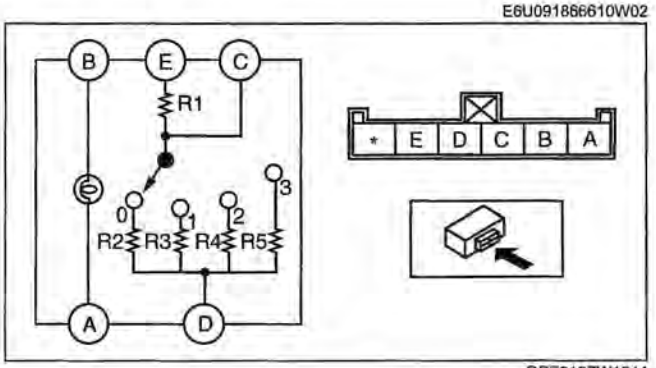

DPE918ZW1044

AUTO LIGHT-OFF CONTROL MODULE REMOVAL/INSTALLATION

E6U091867750W01

1. Disconnect the negative battery cable.
2. Remove in the order indicated in the table.

1	Nut
2	Auto light-off control module
3	Connector

3. Install in the reverse order of removal.

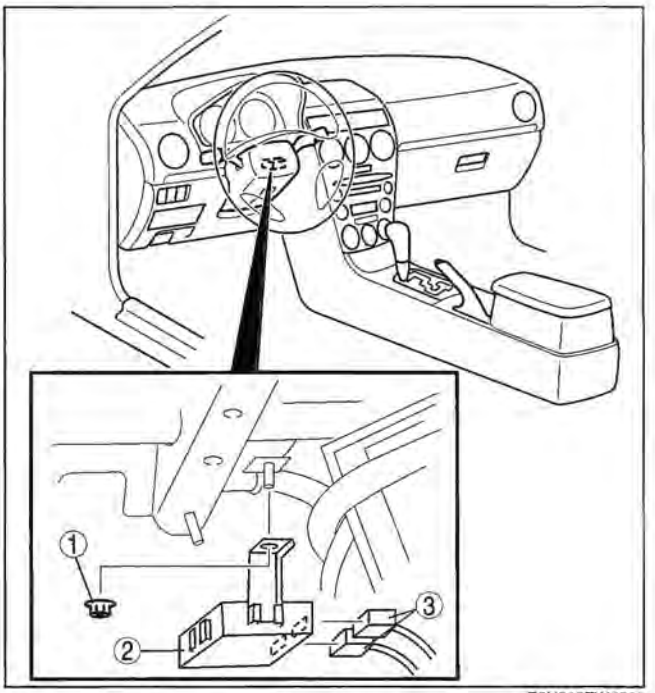

E6U918ZW5015

DRL AND AUTO LIGHT-OFF SYSTEM WIRING DIAGRAM

E6U091867750W02

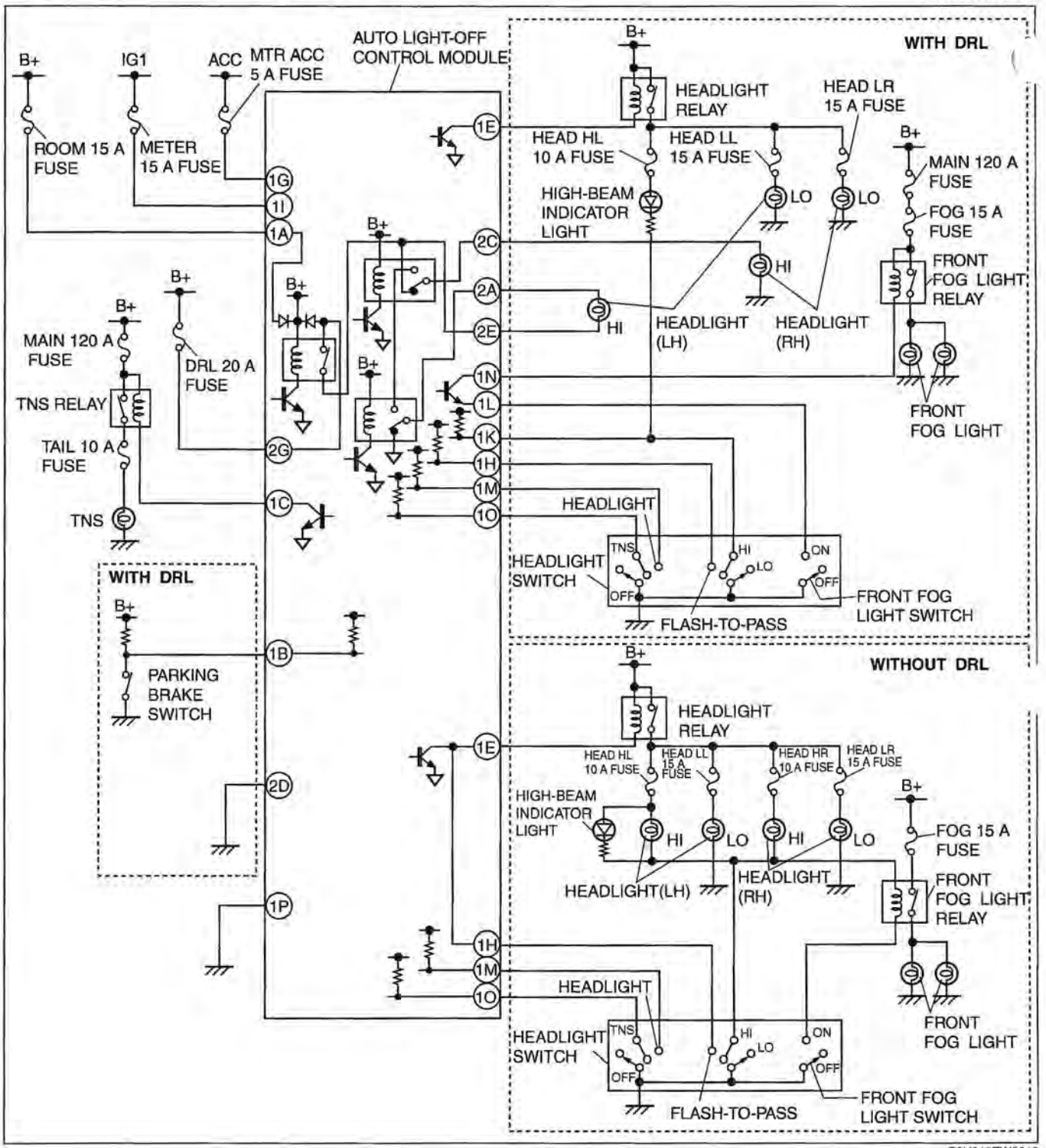

E6U918ZW5018

AUTO LIGHT-OFF CONTROL MODULE INSPECTION

E6U091867750W03

1. Measure the voltage at the auto light-off control module terminals as indicated below.
2. Disconnect the auto light-off control module connector before inspecting for continuity at terminals 1B, 1P and 2D.
   - If not as specified, inspect the parts listed under "Action."
   - If the parts and wiring harnesses are okay but the system still does not work properly, replace the auto light-off control module.

Terminal Voltage List (Reference)

AUTO LIGHT-OFF CONTROL MODULE
HARNESS SIDE CONNECTOR

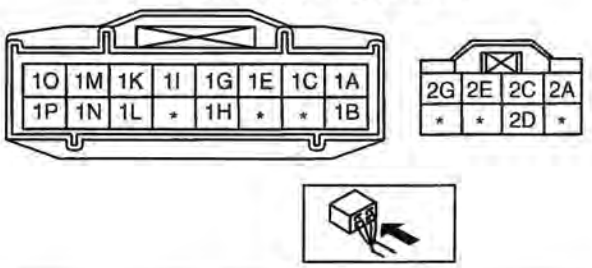

E6U918ZW5019

Terminal	Signal	Connection	Test condition		Voltage (V)/ Continuity	Action
1A	Power supply	ROOM 15 A fuse	Constant		B+	• Inspect ROOM 15 A fuse • Inspect related harness
1B*	Parking brake lever pulled/ released	Parking brake switch	Parking brake lever pulled: check for continuity to ground		Yes	• Inspect parking brake switch • Inspect related harness
			Parking brake lever released: check for continuity to ground		No	
1C	TNS relay operation	TNS relay	Headlight switch at 1st or 2nd position		Below 1.5	• Inspect TAIL 10 A fuse • Inspect TNS relay • Inspect related harness
			Headlight switch at OFF		B+	
1E	Headlight relay operation	Headlight relay	Headlight switch at 2nd position		Below 1.5	• Inspect headlight relay • Inspect related harness
			Headlight switch at OFF or 1st position		B+	
1G	ACC	MTR ACC 5 A fuse	Ignition switch at ACC or ON		B+	• Inspect MTR ACC 5 A fuse • Inspect related harness
			Ignition switch at LOCK		Below 1.0	
1H	Flash-to-pass	Headlight switch	Ignition switch at ON	Flash-to-pass activated	Below 1.0	• Inspect combination switch • Inspect related harness
				Flash-to-pass not activated	B+	
1I	IG1	METER 15 A fuse	Ignition switch at ON		B+	• Inspect METER 15 A fuse • Inspect related harness
			Ignition switch at LOCK or ACC		Below 1.0	
1K*	High-beam on/ off	Headlight switch	Ignition switch at ON	Dimmer switch at HI	Below 1.0	• Inspect combination switch • Inspect related harness
				Dimmer switch at LO	B+	
1L*	Front fog light switch on/off	Front fog light switch	Headlight switch at 2nd position and dimmer switch at LO	Front fog light switch at ON	Below 1.0	• Inspect combination switch • Inspect related harness
				Front fog light switch at OFF	B+	

Terminal	Signal	Connection	Test condition		Voltage (V)/ Continuity	Action
1M	Headlight switch on/off	Headlight switch	Ignition switch at ON	Headlight switch at 2nd position	Below 1.0	• Inspect combination switch • Inspect related harness
				Headlight switch at OFF or 1st position	B+	
1N*	Front fog light relay operation	Front fog light relay	Headlight switch at 2nd position and dimmer switch at LO	Front fog light switch at ON	Below 1.0	• Inspect FOG 15 A fuse • Inspect front fog light relay • Inspect related harness
				Front fog light switch at OFF	B+	
1O	TNS switch on/ off	Headlight switch	Ignition switch at ON	Headlight switch at 1st or 2nd position	Below 1.0	• Inspect combination switch • Inspect related harness
				Headlight switch at OFF	B+	
1P	Ground	GND	Constant: check for continuity to ground		Yes	Inspect GND
2A*	LH headlight operation (high-beam)	LH headlight (high-beam)	Headlight switch at 2nd position	Dimmer switch at the high-beam position	Below 1.0	• Inspect LH headlight • Inspect related harness
			DRL mode		Approx 6.0	
2C*	RH headlight operation (high-beam)	RH headlight (high-beam)	Headlight switch at 2nd position	Dimmer switch at the high-beam position	B+	• Inspect RH headlight • Inspect related harness
				Dimmer switch at the low-beam position	Below 1.0	
2D*	Ground	GND	Constant: check for continuity to ground		Yes	Inspect GND
2E*	LH headlight operation (high-beam)	LH headlight (high-beam)	Headlight switch at 2nd position	Dimmer switch at the high-beam position	B+	• Inspect LH headligl • Inspect related harness
				Dimmer switch at the low-beam position	Below 1.0	
2G*	Power supply	DRL 20 A fuse	Constant		B+	• Inspect DRL 20 A fuse • Inspect related harness

* : For vehicles with DRL only.

FRONT MAP LIGHT REMOVAL/INSTALLATION

E6U091851311W01

1. Disconnect the negative battery cable.
2. Remove in the order indicated in the table.

1	Screw
2	Front map light (See 09–18–27 Front Map Light Removal Note)
3	Connector
4	Socket
5	Front map light bulb

3. Install in the reverse order of removal.

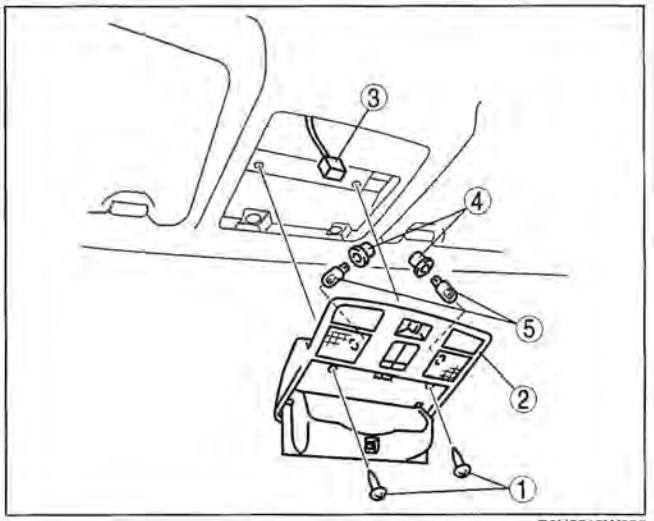

B6U0918W026

Front Map Light Removal Note

1. Insert a tape-wrapped flathead screwdriver into the gap between the headliner and the front map light.
2. Push the tabs to remove the front map light.

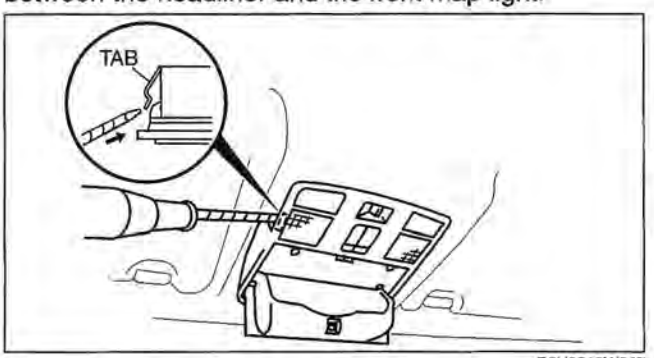

B6U0918W027

09–18

FRONT MAP LIGHT REMOVAL/INSTALLATION [L3 WITH TC]

E6U091851311W05

1. Disconnect the negative battery cable.
2. Remove in the order indicated in the table.

1	Front map light (See 09–18–28 Front Map Light Removal Note.)
2	Connector
3	Socket
4	Front map light bulb

3. Install in the reverse order of removal.

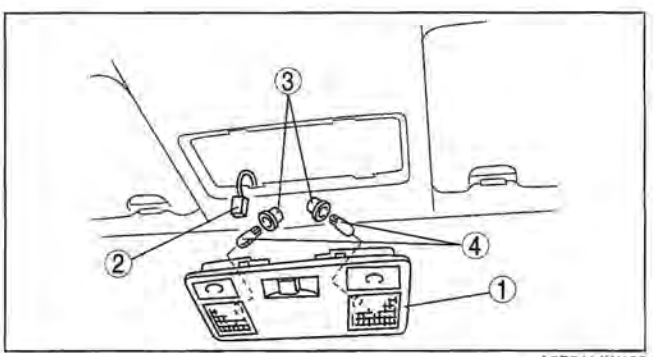

A6E8114W102

Front Map Light Removal Note

1. Insert a tape-wrapped flathead screwdriver into the gap between the headliner and the front map light.
2. Push the tabs to remove the front map light.

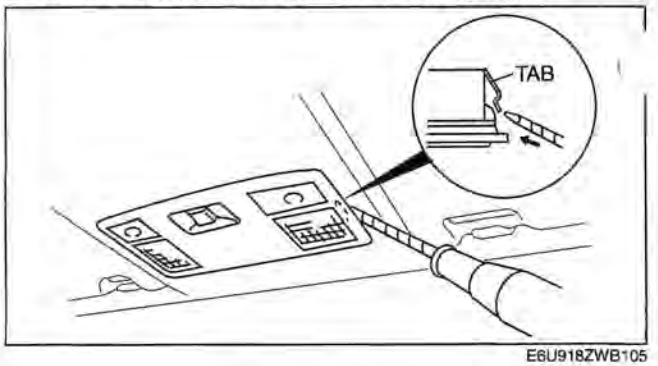

E6U918ZWB105

FRONT MAP LIGHT INSPECTION

E6U091851311W02

1. Inspect for continuity between the front map light terminals using an ohmmeter.
   - If not as specified, replace the front map light.

○—⓪—○ : Bulb

Switch position		Terminal		
Front map light switch	Interior light switch	B	C	A
ON	-	○	⓪	○
OFF	DOOR	○	⓪	○
	OFF			

A6E8114W117

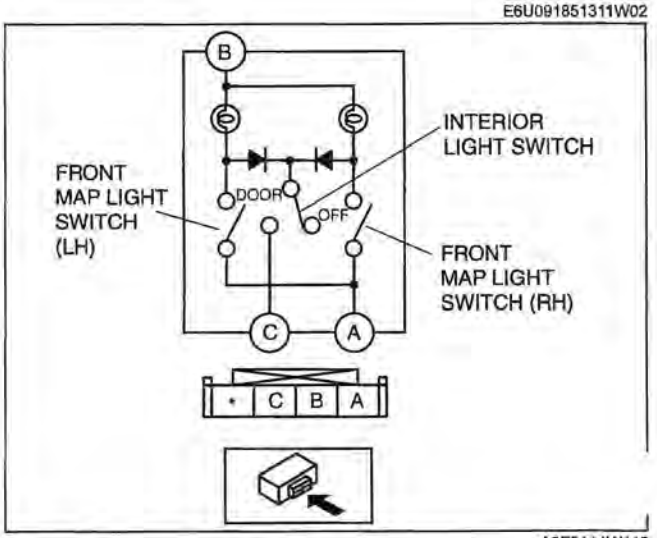

A6E8114W118

REAR MAP LIGHT REMOVAL/INSTALLATION

E6U091851311W03

1. Disconnect the negative battery cable.
2. Remove in the order indicated in the table.

1	Rear map light (See 09–18–29 Rear Map Light Removal Note)
2	Connector
3	Socket
4	Rear map light bulb

3. Install in the reverse order of removal.

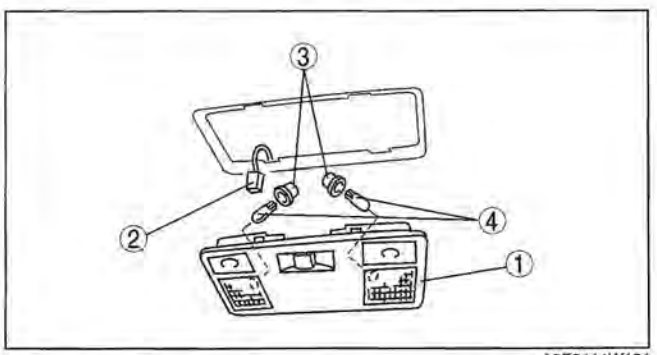

A6E8114W104

Rear Map Light Removal Note

1. Insert a tape-wrapped flathead screwdriver into the gap between the headliner and the rear map light.
2. Push the tabs to remove the rear map light.

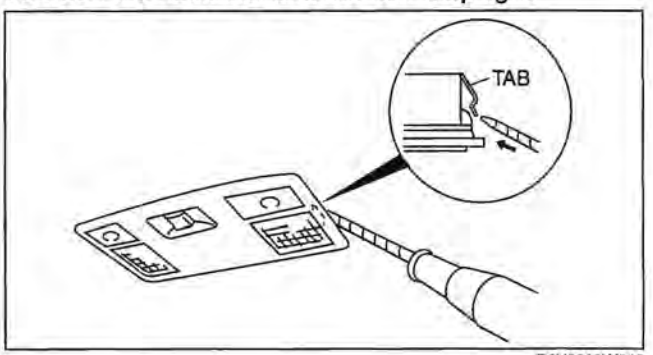

B6U0918W018

REAR MAP LIGHT INSPECTION

E6U091851311W04

1. Inspect for continuity between the rear map light terminals using an ohmmeter.
   - If not as specified, replace the rear map light.

○-⓪-○ : Bulb

Switch position		Terminal		
Rear map light switch	Interior light switch	B	C	A
ON	-	○	⓪	○
OFF	DOOR	○	⓪	○
	OFF			

A6E8114W127

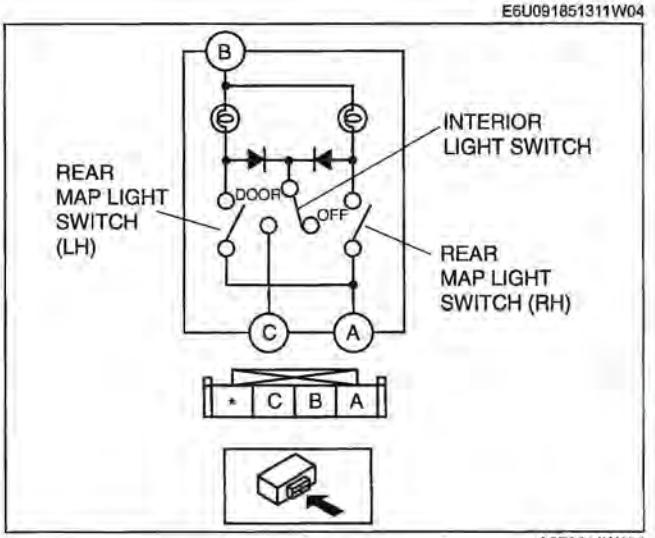

A6E8114W128

09–18

CARGO COMPARTMENT LIGHT REMOVAL/INSTALLATION [5-DOOR, SPORT WAGON]

E6U091851441W01

5-Door

1. Disconnect the negative battery cable.
2. Remove in the order indicated in the table.

1	Cargo compartment light
2	Connector
3	Lens
4	Cargo compartment light bulb

3. Install in the reverse order of removal.

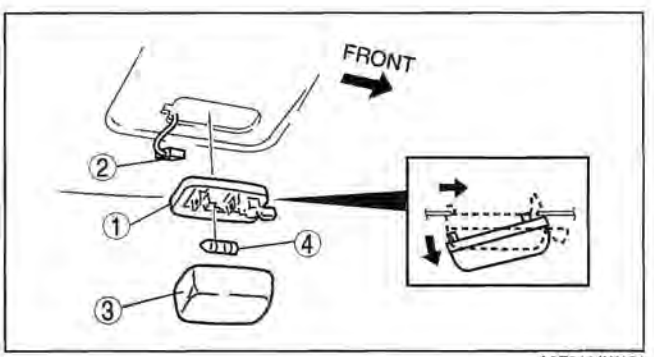

A6E8114W101

Sport Wagon

1. Disconnect the negative battery cable.
2. Remove in the order indicated in the table.

1	Lens (See09–18–30 Lens removal note)
2	Cargo compartment light bulb
3	Screw
4	Cargo compartment light
5	Connector

3. Install in the reverse order of removal.

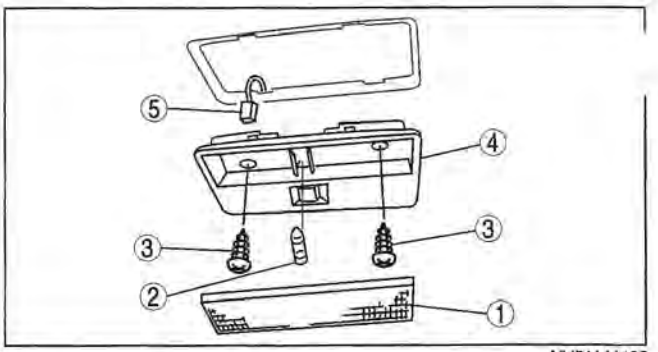

A6J81141102

Lens removal note

1. Insert a tape-wrapped flathead screwdriver into the service hole.
2. Twist the flathead screwdriver as indicated by the arrow to remove the lens.

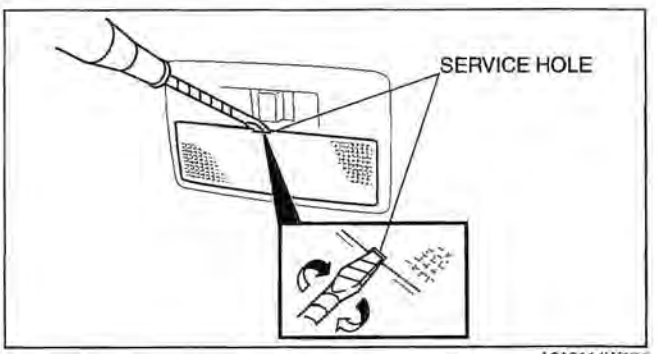

A6A8114W104

CARGO COMPARTMENT LIGHT INSPECTION [5-DOOR, SPORT WAGON]

E6U091851441W02

5-Door

1. Inspect for continuity between the cargo compartment light terminals using an ohmmeter.
   - If not as specified, replace the cargo compartment light.

: Bulb

Switch position	Terminal	
	A	B
ON	○	○
OFF		

A6E8114W1142

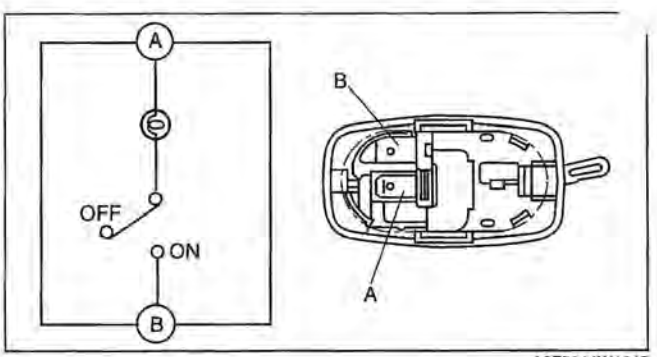

A6E8114W1112

Sport Wagon

1. Inspect for continuity between the cargo compartment light terminals using an ohmmeter.
   - If not as specified, replace the cargo compartment light.

: Bulb

Switch position	Terminal	
	A	B
DOOR	○	○
OFF		

A6A81141119

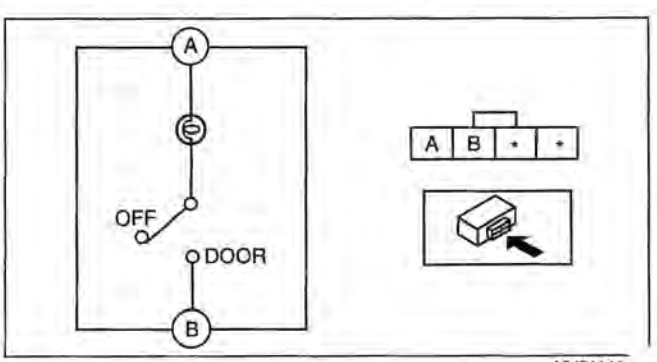

A6J81141

CARGO COMPARTMENT LIGHT SWITCH INSPECTION [5-DOOR, SPORT WAGON]

E6U091851441W03

1. Remove the liftgate lower trim. (See 09–17–23 LIFTGATE LOWER TRIM REMOVAL/INSTALLATION [5-DOOR, SPORT WAGON].)
   Disconnect the cargo compartment light switch connector.
2. Inspect for continuity between the cargo compartment light switch terminals using an ohmmeter.
   - If not as specified, replace the liftgate lock.

O—O : Continuity

Switch position	Terminal	
	A	B
On (liftgate open)	O	O
Off (liftgate closed)		

A6E8114W120

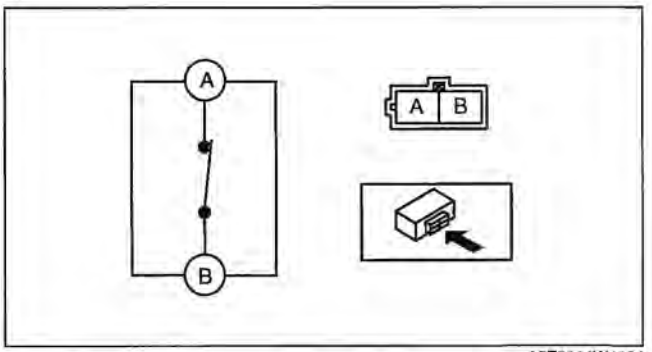

A6E8114W1194

IGNITION KEY ILLUMINATION BULB REMOVAL/INSTALLATION

E6U091860231W01

1. Disconnect the negative battery cable.
2. Remove the column cover.
3. Remove the ignition key illumination bulb.
4. Install in the reverse order of removal.

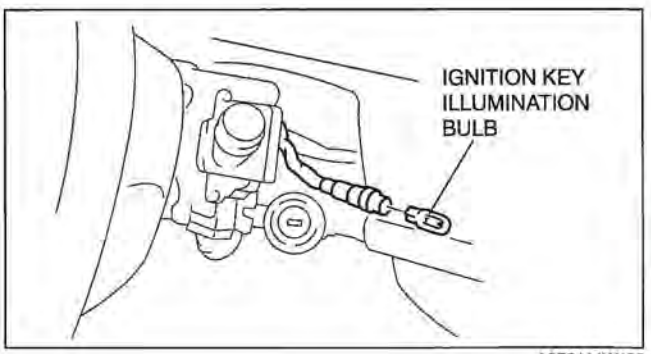

A6E8114W129

ASHTRAY ILLUMINATION BULB REMOVAL/INSTALLATION

E6U091864610W01

1. Disconnect the negative battery cable.
2. Remove the boot panel.
3. Remove in the order indicated in the table.

1	Socket
2	Ashtray illumination bulb

4. Install in the reverse order of removal.

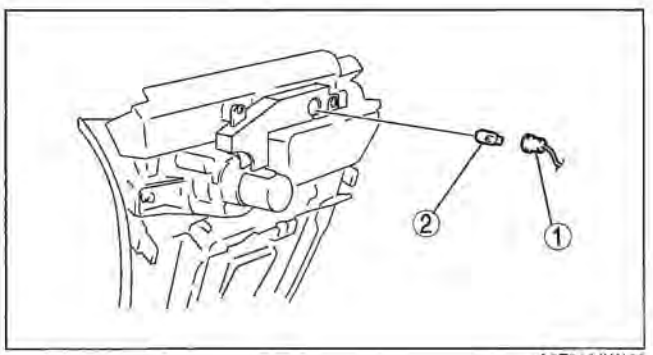

A6E8114W106

VANITY MIRROR ILLUMINATION BULB REMOVAL/INSTALLATION

E6U091869270W01

1. Disconnect the negative battery cable.
2. Remove in the order indicated in the table.

1	Lens (See 09–18–32 Lens Removal Note)
2	Vanity mirror illumination bulb

3. Install in the reverse order of removal.

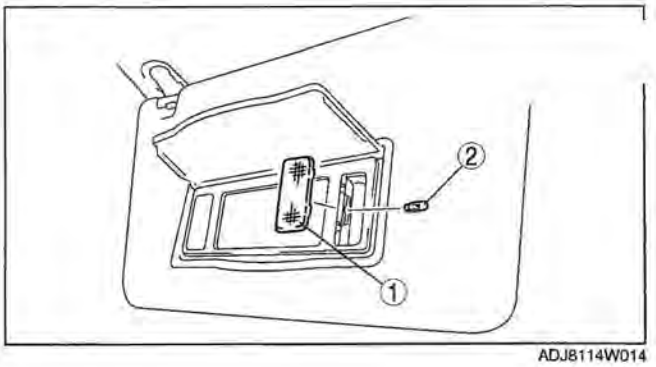

ADJ8114W014

Lens Removal Note

1. Insert a tape-wrapped flathead screwdriver into the service hole, and pry the screwdriver in the direction indicated by the arrow to remove the lens.

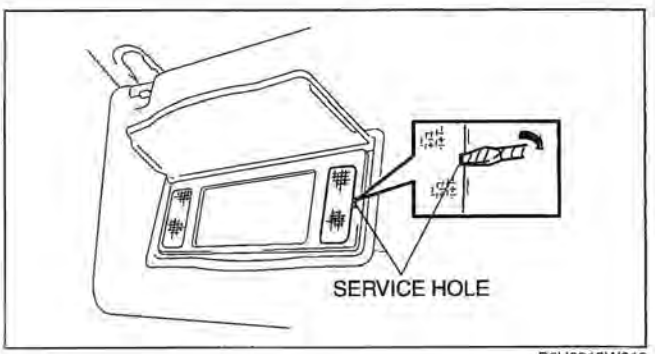

B6U0918W019

VANITY MIRROR ILLUMINATION INSPECTION

E6U091869270W

1. Remove the sunvisor.
2. Inspect for continuity between the vanity mirror illumination terminals using an ohmmeter.
   - If not as specified, replace the sunvisor.

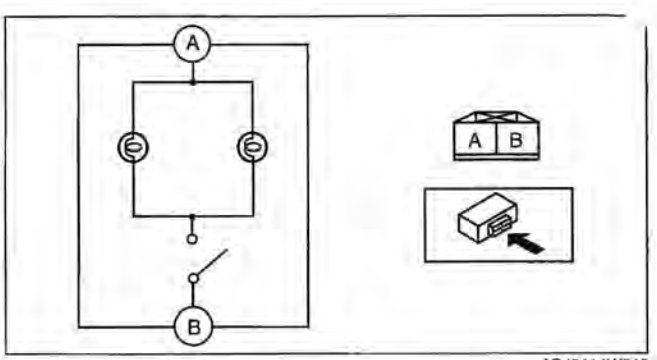

ADJ8114W013

: Bulb

Vanity mirror cover codition	Terminal	
	A	B
OPEN		
CLOSED		

B6U0918W020

GLOVE COMPARTMENT LIGHT BULB REMOVAL/INSTALLATION

E6U091851445W01

1. Disconnect the negative battery cable.
2. Remove in the order indicated in the table.

1	Socket
2	Glove compartment light bulb

3. Install in the reverse order of removal.

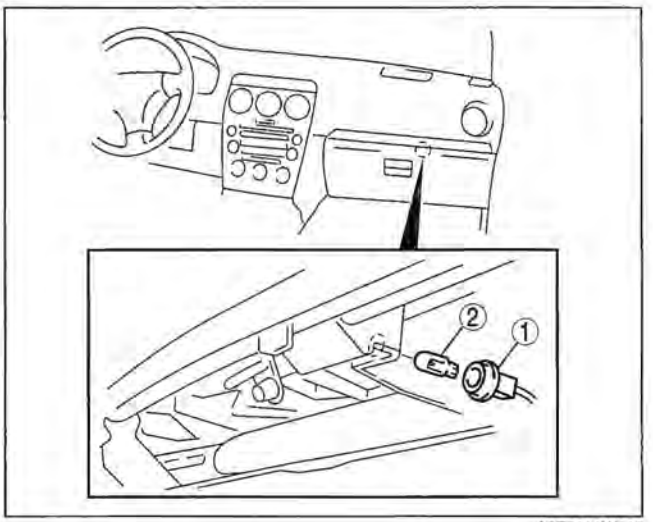

A6E8114W113

COURTESY LIGHT BULB REMOVAL/INSTALLATION

E6U091869971W01

1. Disconnect the negative battery cable.
2. Remove in the order indicated in the table.

1	Lens
2	Courtesy light bulb

3. Install in the reverse order of removal.

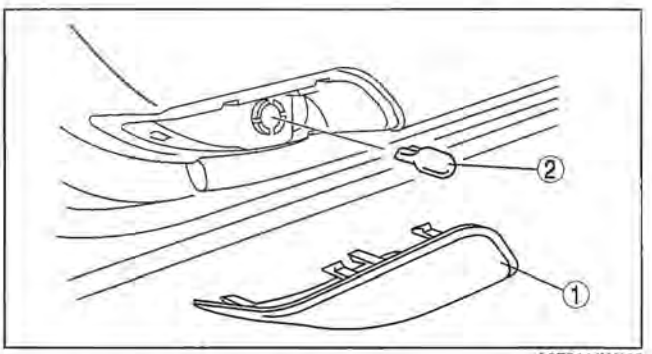

A6E8114W110

TRUNK COMPARTMENT LIGHT BULB REMOVAL/INSTALLATION [SPORT SEDAN]

E6U091851440W01

1. Disconnect the negative battery cable.
2. Remove in the order indicated in the table.

1	Lens
2	Trunk compartment light bulb

3. Install in the reverse order of removal.

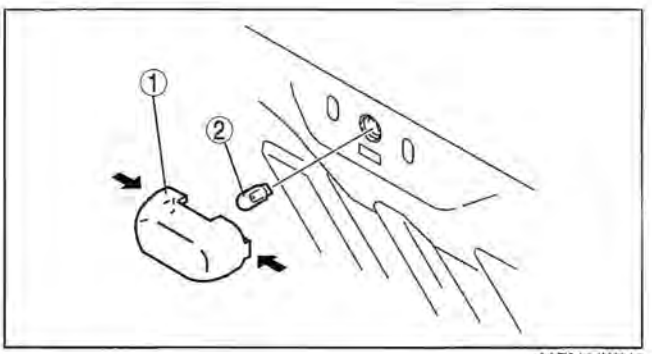

A6E8114W112

TRUNK COMPARTMENT LIGHT SWITCH INSPECTION [SPORT SEDAN]

E6U09185144CW02

1. Remove the trunk lid trim. (See 09–17–20 TRUNK LID TRIM REMOVAL/INSTALLATION [SPORT SEDAN].)
2. Disconnect the trunk compartment light switch connector.
3. Inspect for continuity between the trunk compartment light switch terminals using an ohmmeter.
   - If not as specified, replace the trunk lid lock.

O—O : Continuity

Switch position	Terminal	
	A	B
On (trunk open)	O	O
Off (trunk closed)		

A6E8114W121

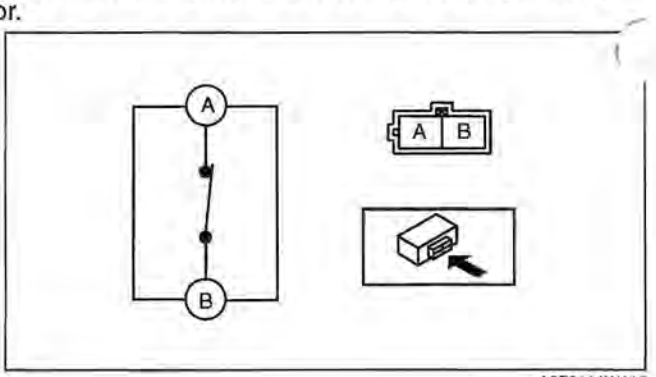

A6E8114W119

PANEL LIGHT CONTROL SWITCH REMOVAL/INSTALLATION

E6U091866600W01

1. Disconnect the negative battery cable.
2. Remove in the order indicated in the table.

1	Panel light control switch (See 09–18–34 Panel Light Control Switch Removal Note)
2	Connector

3. Install in the reverse order of removal.

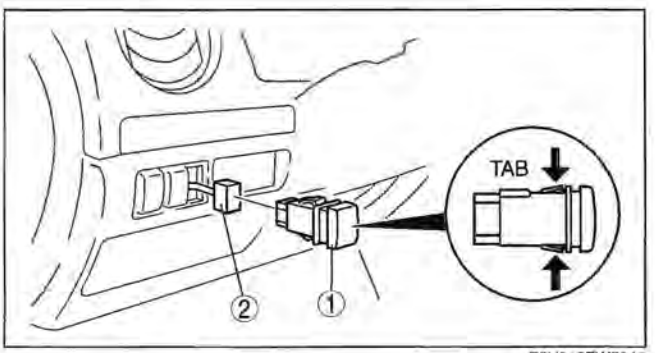

E6U918ZW50

Panel Light Control Switch Removal Note

1. Insert your hand from the lower side of the dashboard and squeeze the tabs of the panel light control switch.
2. Pull the panel light control switch toward you to remove it.

PANEL LIGHT CONTROL SWITCH INSPECTION

E6U091866600W02

1. Connect the panel light control switch connector.
2. Connect the negative battery cable.
3. Measure the voltage at each terminal (other than terminal D).
   - If the voltage is not as specified in the Terminal Voltage Table (Reference), inspect the parts under "Inspection item(s)".
4. Disconnect the panel light control switch connector.
5. Verify that continuity at terminal D is as indicated in the Terminal Voltage Table (Reference).
   - If there is any malfunction, inspect the parts under "Inspection item(s)".
     — If the system does not work properly even though the parts or related wiring harnesses do not have any malfunction, replace the panel light control switch.

Terminal Voltage Table (Reference)

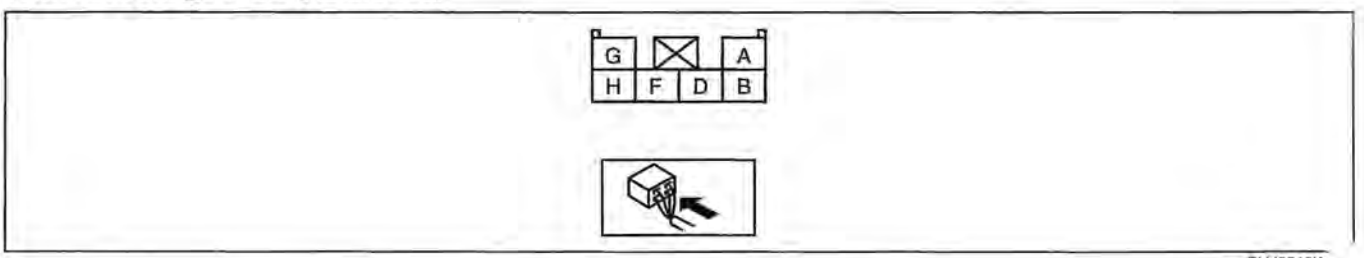

BHJ0918V

Terminal	Signal name	Connected to	Measured condition	Measured condition	Voltage (V)/ Continuity	Inspection item(s)
A	Illumination	Instrument cluster	Inspect using an oscilloscope. (See 09–18–35 Terminals A and F Inspection.)		–	• Instrument cluster • Each illumination • Related wiring harnesses
F		Each illumination				
B	TNS	TNS relay	Turn the light switch to the TNS or ON position.		B+	• TNS relay (See09–21–7 RELAY INSPECTION.) • ILLUMI 10 A fuse • Related wiring harnesses
			Turn the light switch to the OFF position.		1.0 or less	
D	GND	Body ground	Under any condition: Inspect for continuity to ground.		Continuity detected	• GND • Related wiring harnesses
G	IG1	Ignition switch	Turn the ignition switch to the ON position.		B+	• Ignition switch (See09–21–3 IGNITION SWITCH INSPECTION [WITHOUT ADVANCED KEYLESS SYSTEM].) (See09–21–5 IGNITION SWITCH INSPECTION [WITH ADVANCED KEYLESS SYSTEM].) • Related wiring harnesses
			Turn the ignition switch to the ACC or LOCK position.		1.0 or less	
H	Dimmer cancel	Instrument cluster/ center panel module	Turn the light switch to the TNS or ON position.	Dimmer cancel switch is on.	B+	• Instrument cluster • Center panel module • Related wiring harnesses
				Dimmer cancel switch is off.	1.0 or less	

09–18

Terminals A and F Inspection

Measure the wave pattern of panel light control switch terminals A and F using an oscilloscope.

- Oscilloscope setting :
  5 V/DIV (Y) , 5 ms/div (X) , DC range

2. Turn the light switch to the TNS or ON position.
3. Turn the panel light control switch to the brightest setting.

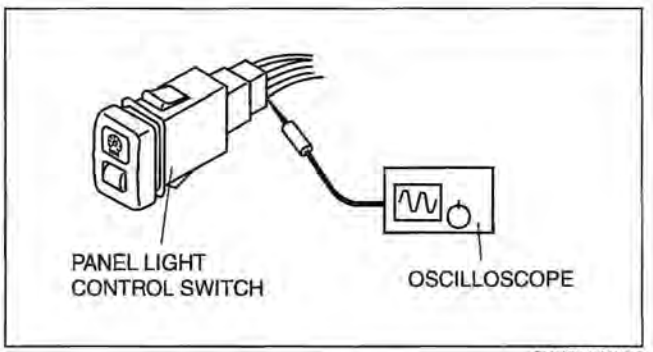

CHU0918W168

4. Verify that the wave pattern is as shown in the figure.

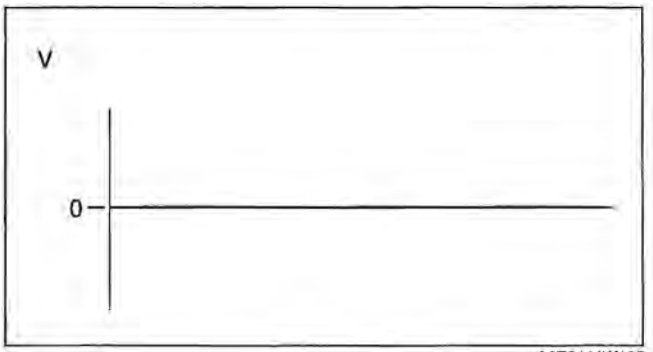

A6E8114W125

5. Turn the panel light control switch to the darkest position and verify that the wave pattern is as shown in the figure.

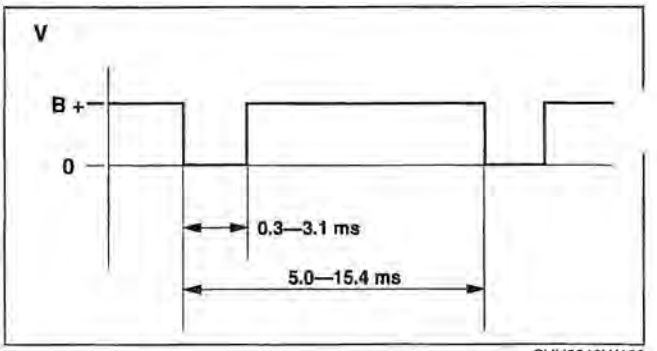

CHU0918W169

DOOR SWITCH REMOVAL/INSTALLATION

E6U091866540W01

1. Disconnect the negative battery cable.
2. Remove in the order indicated in the table.

1	Screw
2	Door switch
3	Connector

3. Install in the reverse order of removal.

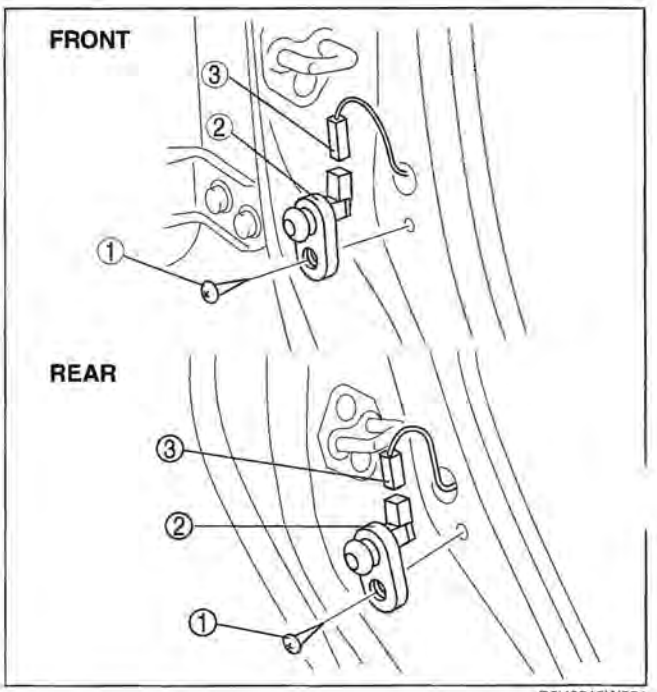

B6U0918W021

DOOR SWITCH INSPECTION

E6U091866540W02

1. Remove the door switch. (See 09–18–36 DOOR SWITCH REMOVAL/INSTALLATION.)
2. Inspect for continuity between the door switch terminal and a body ground using an ohmmeter.
   - If not as specified, replace the door switch.

O—O : Continuity

Switch position	Terminal	
	A	Body GND
Pressed		
Released	O	O

A6E8114W122

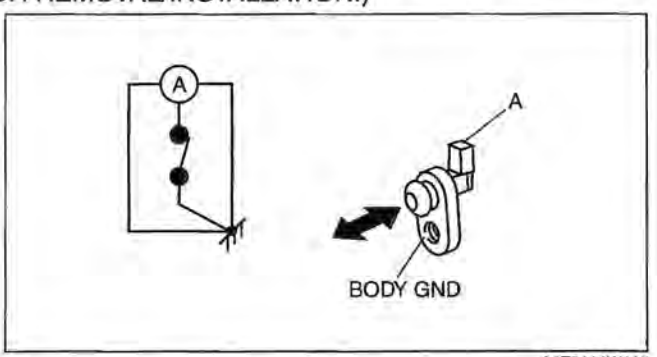

A6E8114W115

09–19 WIPER/WASHER SYSTEM

WIPER AND WASHER SYSTEM LOCATION INDEX 09–19–2
WIPER AND WASHER SYSTEM LOCATION INDEX [L3 WITH TC] 09–19–3
WINDSHIELD WIPER ARM AND BLADE ADJUSTMENT 09–19–4
WINDSHIELD WIPER ARM AND BLADE REMOVAL/INSTALLATION 09–19–4
Windshield Wiper Arm Installation Note 09–19–4
WINDSHIELD WIPER MOTOR REMOVAL/INSTALLATION 09–19–5
WINDSHIELD WIPER MOTOR DISASSEMBLY/ASSEMBLY 09–19–5
Windshield Wiper Link Removal Note 09–19–5
WINDSHIELD WIPER MOTOR INSPECTION 09–19–5
WASHER TANK REMOVAL/INSTALLATION [SPORT SEDAN] 09–19–6
Windshield Washer Hose Installation Note 09–19–6
WASHER TANK REMOVAL/INSTALLATION [5-DOOR, SPORT WAGON] 09–19–6
Washer Hose Installation Note 09–19–6
WASHER TANK REMOVAL/INSTALLATION [L3 WITH TC] 09–19–7
WINDSHIELD WASHER MOTOR REMOVAL/INSTALLATION 09–19–7
WINDSHIELD WASHER MOTOR REMOVAL/INSTALLATION [L3 WITH TC] 09–19–7
WINDSHIELD WASHER MOTOR INSPECTION 09–19–8
WINDSHIELD WASHER MOTOR INSPECTION [L3 WITH TC] 09–19–8
WASHER FLUID-LEVEL SENSOR REMOVAL/INSTALLATION 09–19–8
WASHER FLUID-LEVEL SENSOR REMOVAL/INSTALLATION [L3 WITH TC] 09–19–9
WASHER FLUID-LEVEL SENSOR INSPECTION 09–19–9
WIPER AND WASHER SWITCH REMOVAL/INSTALLATION 09–19–9
WIPER AND WASHER SWITCH INSPECTION 09–19–10
REAR WIPER AND WASHER SWITCH INSPECTION [5-DOOR, SPORT WAGON] 09–19–10
WINDSHIELD WASHER NOZZLE REMOVAL/INSTALLATION 09–19–10
WINDSHIELD WASHER NOZZLE REMOVAL/INSTALLATION [L3 WITH TC] 09–19–11
WINDSHIELD WASHER HOSE REMOVAL/INSTALLATION 09–19–11
Windshield Washer Hose Installation Note 09–19–11
WINDSHIELD WASHER HOSE REMOVAL/INSTALLATION [L3 WITH TC] 09–19–12
REAR WASHER MOTOR REMOVAL/INSTALLATION [5-DOOR, SPORT WAGON] 09–19–12
REAR WASHER MOTOR INSPECTION [5-DOOR, SPORT WAGON] 09–19–12
REAR WIPER MOTOR REMOVAL/INSTALLATION [5-DOOR, SPORT WAGON] 09–19–13
REAR WIPER MOTOR INSPECTION [5-DOOR, SPORT WAGON] 09–19–13
REAR WIPER ARM AND BLADE REMOVAL/INSTALLATION [5-DOOR, SPORT WAGON] 09–19–14
Rear Wiper Arm Installation Note 09–19–15
REAR WIPER ARM AND BLADE ADJUSTMENT [5-DOOR, SPORT WAGON] 09–19–15
REAR WASHER NOZZLE REMOVAL/INSTALLATION [5-DOOR, SPORT WAGON] 09–19–15
REAR WASHER NOZZLE ADJUSTMENT [5-DOOR, SPORT WAGON] 09–19–16
REAR WASHER HOSE REMOVAL/INSTALLATION [5-DOOR, SPORT WAGON] 09–19–16

WIPER AND WASHER SYSTEM LOCATION INDEX

E6U091900000W01

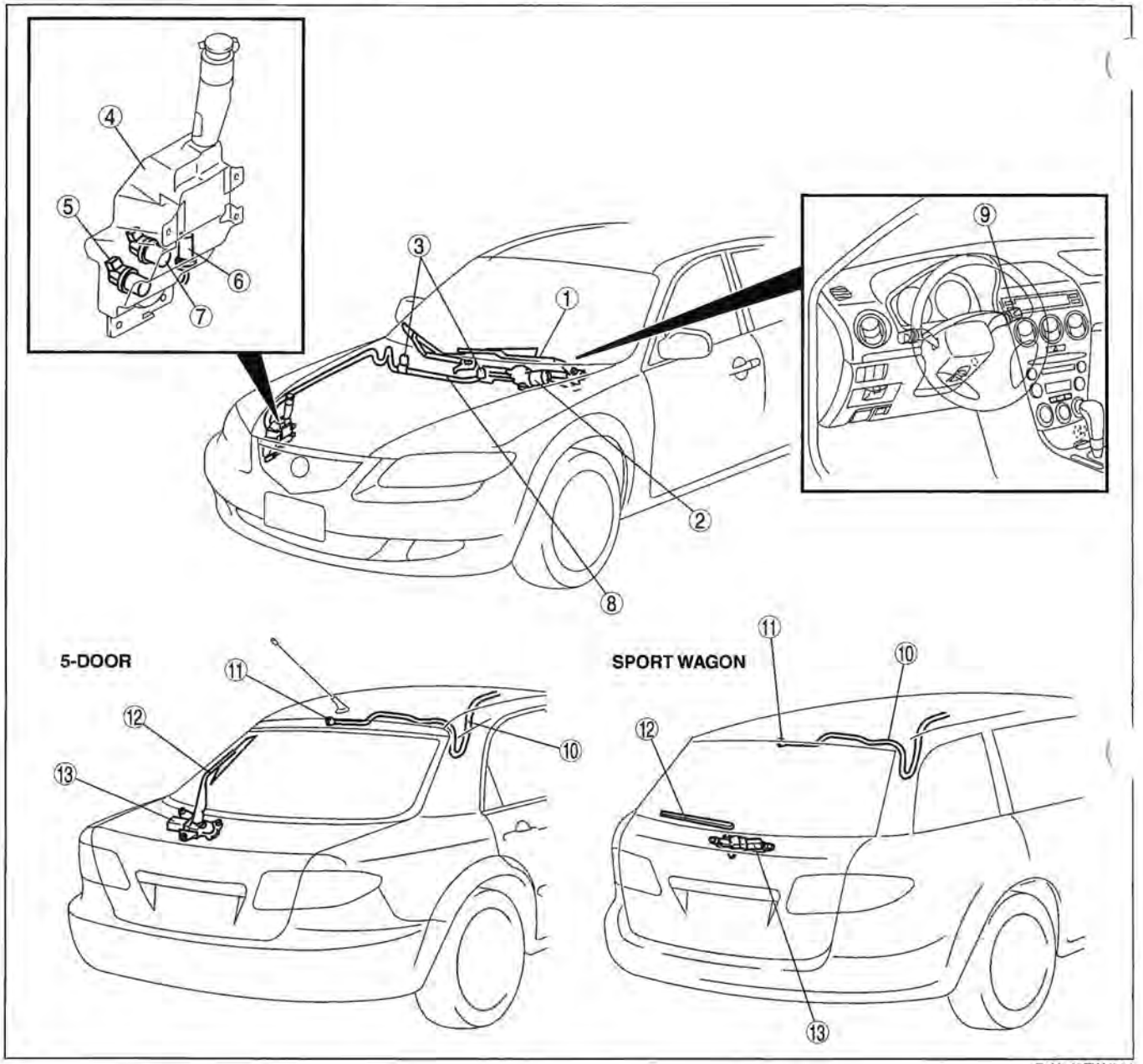

E6U919ZW5001

1	Windshield wiper arm and blade (See 09–19–4 WINDSHIELD WIPER ARM AND BLADE REMOVAL/INSTALLATION.) (See 09–19–4 WINDSHIELD WIPER ARM AND BLADE ADJUSTMENT)
2	Windshield wiper motor (See 09–19–5 WINDSHIELD WIPER MOTOR REMOVAL/INSTALLATION.) (See 09–19–5 WINDSHIELD WIPER MOTOR DISASSEMBLY/ASSEMBLY.) (See 09–19–5 WINDSHIELD WIPER MOTOR INSPECTION.)
3	Windshield washer nozzle (See 09–19–10 WINDSHIELD WASHER NOZZLE REMOVAL/INSTALLATION.)

4	Washer tank (See 09–19–6 WASHER TANK REMOVAL/INSTALLATION [SPORT SEDAN].) (See 09–19–6 WASHER TANK REMOVAL/INSTALLATION [5-DOOR, SPORT WAGON].)
5	Windshield washer motor (See 09–19–7 WINDSHIELD WASHER MOTOR REMOVAL/INSTALLATION.) (See 09–19–8 WINDSHIELD WASHER MOTOR INSPECTION.)
6	Washer fluid-level sensor (See 09–19–8 WASHER FLUID-LEVEL SENSOR REMOVAL/INSTALLATION.) (See 09–19–9 WASHER FLUID-LEVEL SENSOR INSPECTION.)

7	Rear washer motor (5-Door, Sport Wagon) (See 09–19–12 REAR WASHER MOTOR REMOVAL/INSTALLATION [5-DOOR, SPORT WAGON].) (See 09–19–12 REAR WASHER MOTOR INSPECTION [5-DOOR, SPORT WAGON].)
8	Windshield washer hose (See 09–19–11 WINDSHIELD WASHER HOSE REMOVAL/INSTALLATION.)
9	Wiper and washer switch (See 09–19–9 WIPER AND WASHER SWITCH REMOVAL/INSTALLATION.) (See 09–19–10 WIPER AND WASHER SWITCH INSPECTION.) (See 09–19–10 REAR WIPER AND WASHER SWITCH INSPECTION [5-DOOR, SPORT WAGON].)
10	Rear washer hose (5-Door, Sport Wagon) (See 09–19–16 REAR WASHER HOSE REMOVAL/INSTALLATION [5-DOOR, SPORT WAGON])
11	Rear washer nozzle (5-Door, Sport Wagon) (See 09–19–15 REAR WASHER NOZZLE REMOVAL/INSTALLATION [5-DOOR, SPORT WAGON].)
12	Rear wiper arm and blade (5-Door, Sport Wagon) (See 09–19–14 REAR WIPER ARM AND BLADE REMOVAL/INSTALLATION [5-DOOR, SPORT WAGON].) (See 09–19–15 REAR WIPER ARM AND BLADE ADJUSTMENT [5-DOOR, SPORT WAGON].)
13	Windshield wiper motor (5-Door, Sport Wagon) (See 09–19–13 REAR WIPER MOTOR REMOVAL/INSTALLATION [5-DOOR, SPORT WAGON].) (See 09–19–13 REAR WIPER MOTOR INSPECTION [5-DOOR, SPORT WAGON].)

WIPER AND WASHER SYSTEM LOCATION INDEX [L3 WITH TC]

E6U091900000W02

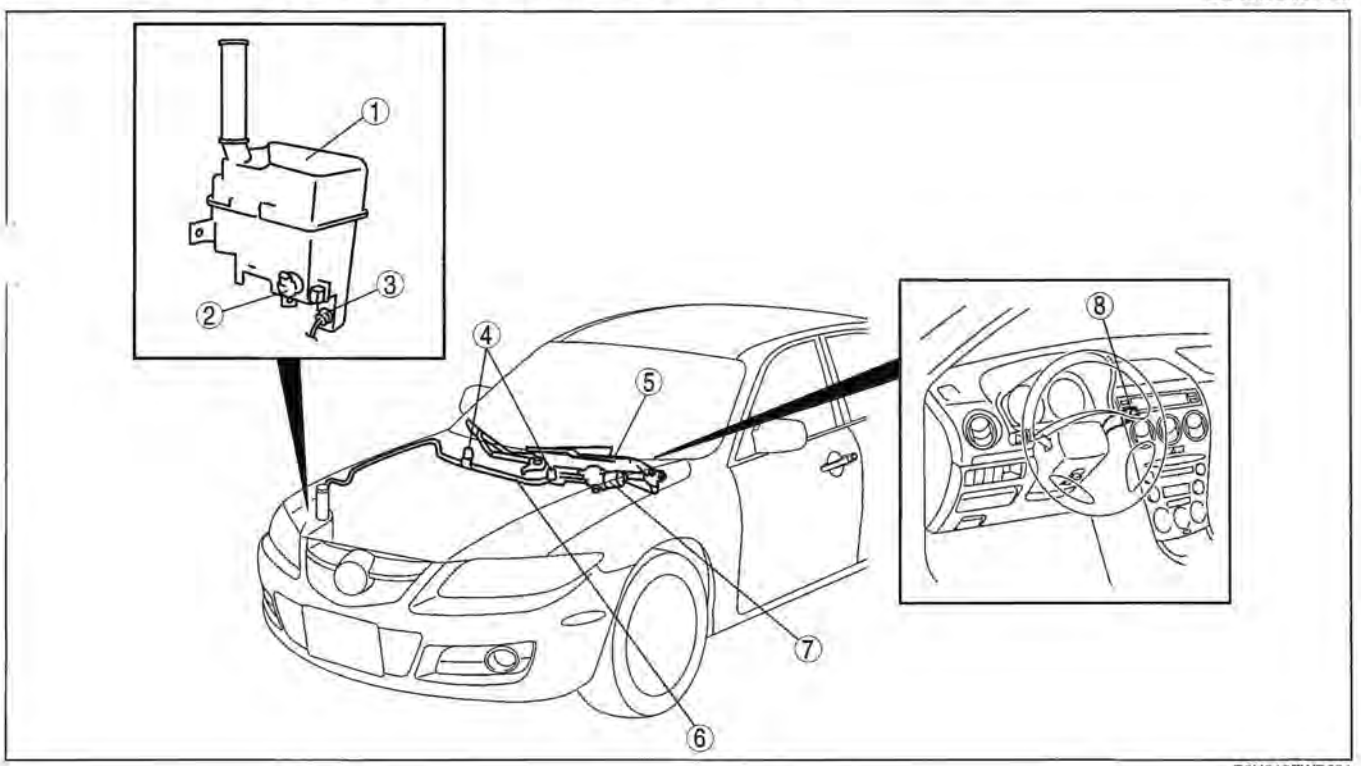

E6U919ZWB001

1	Washer tank (See 09–19–7 WASHER TANK REMOVAL/INSTALLATION [L3 WITH TC].)
2	Windshield washer motor (See 09–19–7 WINDSHIELD WASHER MOTOR REMOVAL/INSTALLATION.) (See 09–19–8 WINDSHIELD WASHER MOTOR INSPECTION.)
3	Washer fluid-level sensor (See 09–19–8 WASHER FLUID-LEVEL SENSOR REMOVAL/INSTALLATION.) (See 09–19–9 WASHER FLUID-LEVEL SENSOR INSPECTION.)
4	Windshield washer nozzle (See 09–19–10 WINDSHIELD WASHER NOZZLE REMOVAL/INSTALLATION.)
5	Windshield wiper arm and blade (See 09–19–4 WINDSHIELD WIPER ARM AND BLADE REMOVAL/INSTALLATION.) (See 09–19–4 WINDSHIELD WIPER ARM AND BLADE ADJUSTMENT.)
6	Windshield washer hose (See 09–19–11 WINDSHIELD WASHER HOSE REMOVAL/INSTALLATION.)

7	Windshield wiper motor (See 09–19–5 WINDSHIELD WIPER MOTOR REMOVAL/INSTALLATION.) (See 09–19–5 WINDSHIELD WIPER MOTOR DISASSEMBLY/ASSEMBLY.) (See 09–19–5 WINDSHIELD WIPER MOTOR INSPECTION.)

8	Wiper and washer switch (See 09–19–9 WIPER AND WASHER SWITCH REMOVAL/INSTALLATION.) (See 09–19–10 WIPER AND WASHER SWITCH INSPECTION.)

WINDSHIELD WIPER ARM AND BLADE ADJUSTMENT

E6U091967320W01

1. Operate the windshield wiper motor to set the wipers in the park position.
2. Set the windshield wiper arm heights as shown.

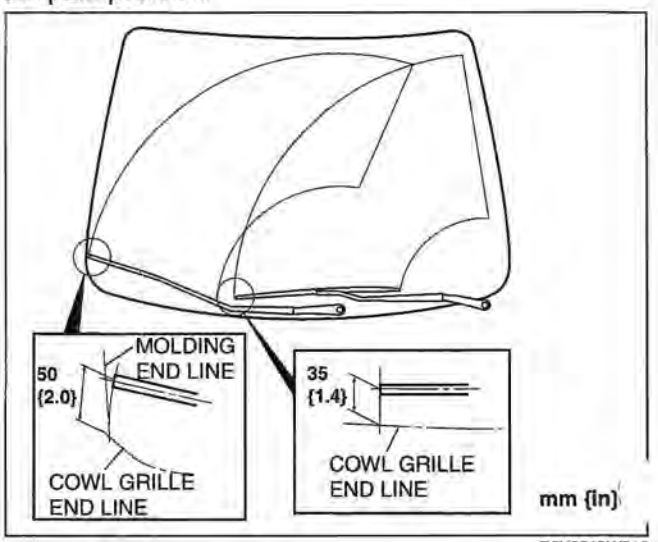

B6U0919W210

WINDSHIELD WIPER ARM AND BLADE REMOVAL/INSTALLATION

E6U091967320W02

1. Remove in the order indicated in the table.

1	Cap
2	Nut
3	Windshield wiper arm (See 09–19–4 Windshield Wiper Arm Installation Note)
4	Windshield wiper blade
5	Rubber brush
6	Backing plate

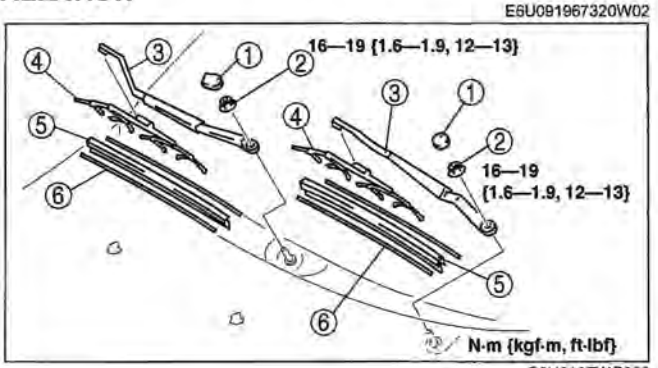

C6U919ZWC003

2. Install in the reverse order of removal.
3. Adjust the windshield wiper arm and blade. (See 09–19–4 WINDSHIELD WIPER ARM AND BLADE ADJUSTMENT.)

Windshield Wiper Arm Installation Note

1. Clean the windshield wiper arm connector shafts using a wire brush before installing the windshield wiper arms.

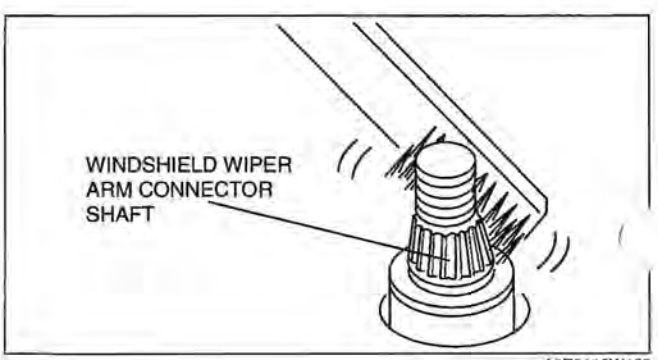

A6E8116W103

WINDSHIELD WIPER MOTOR REMOVAL/INSTALLATION

E6U091967340W01

1. Disconnect the negative battery cable.
2. Remove the windshield wiper arm and blade. (See 09–19–4 WINDSHIELD WIPER ARM AND BLADE REMOVAL/INSTALLATION.)
3. Remove the cowl grille. (See 09–16–4 COWL GRILLE REMOVAL/INSTALLATION [EXCEPT L3 WITH TC].) (See 09–16–4 COWL GRILLE REMOVAL/INSTALLATION [L3 WITH TC].)
4. Remove in the order indicated in the table.

1	Connector
2	Bolt
3	Windshield wiper motor

5. Install in the reverse order of removal.
6. Adjust the windshield wiper arm and blade. (See 09–19–4 WINDSHIELD WIPER ARM AND BLADE ADJUSTMENT.)

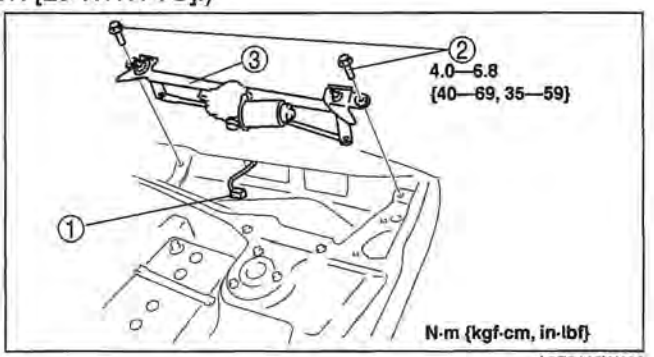

A6E8116W102

WINDSHIELD WIPER MOTOR DISASSEMBLY/ASSEMBLY

E6U091967340W02

1. Disassemble in the order indicated in the table.

1	Windshield wiper link (See 09–19–5 Windshield Wiper Link Removal Note)
2	Bolt
3	Windshield wiper motor

2. Assemble in the reverse order of disassembly.

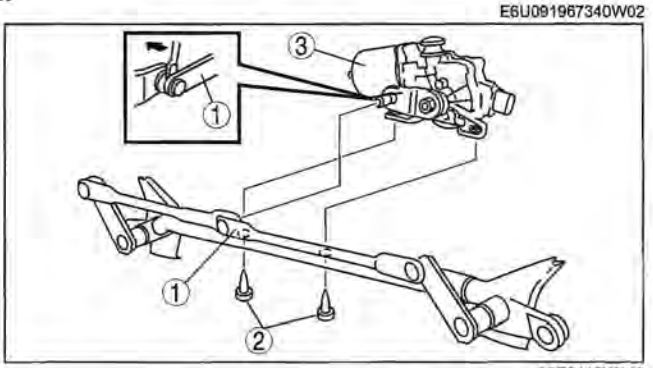

A6E8116W140

09–19

Windshield Wiper Link Removal Note

1. Pry off the connection between the windshield wiper motor and windshield wiper link.

WINDSHIELD WIPER MOTOR INSPECTION

E6U091967340W03

1. Disconnect the windshield wiper motor connector.
2. Connect battery positive voltage to terminal E or D and ground to terminal B, and inspect operation of the windshield wiper motor as indicated below.

Terminal	Operation
E	High
D	Low

3. Disconnect battery positive voltage from terminal E of the motor while the wipers are operating.
4. Verify that the wipers do not stop in the park position.
5. Short between the motor terminals A and D and connect battery positive voltage to the motor terminal C.
6. Verify that the wipers operate at low speed again, then stop in the park position.
   - If not as specified, replace the windshield wiper motor.

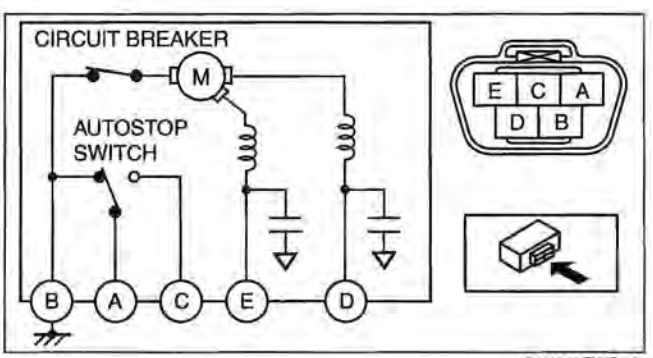

C6U919ZWC005

WASHER TANK REMOVAL/INSTALLATION [SPORT SEDAN]

E6U091967480W01

1. Disconnect the negative battery cable.
2. Remove the front bumper. (See 09–10–10 FRONT BUMPER REMOVAL/INSTALLATION.)
3. Remove in the order indicated in the table.

1	Connector
2	Windshield washer hose (See 09–19–6 Windshield Washer Hose Installation Note)
3	Bolt
4	Nut
5	Washer tank

4. Install in the reverse order of removal.

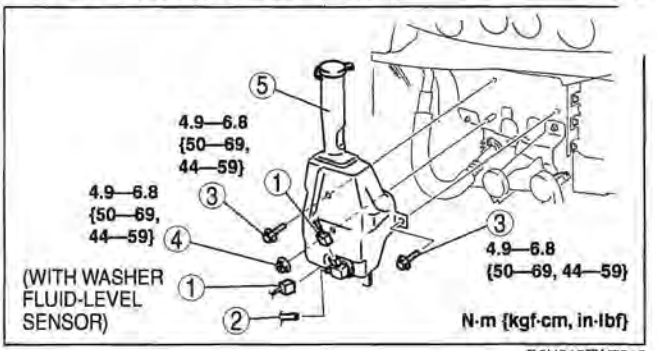

D6U919ZW7012

Windshield Washer Hose Installation Note

1. Install the windshield washer hose by inserting it in the washer tank groove.

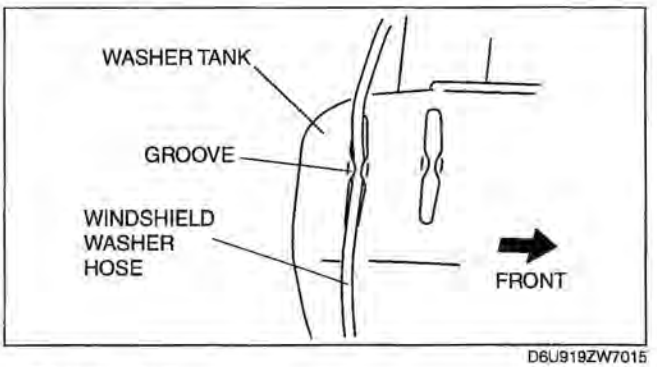

D6U919ZW7015

WASHER TANK REMOVAL/INSTALLATION [5-DOOR, SPORT WAGON]

E6U091967480

1. Disconnect the negative battery cable.
2. Remove the front bumper. (See 09–10–10 FRONT BUMPER REMOVAL/INSTALLATION.)
3. Remove in the order indicated in the table.

1	Connector
2	Washer hose (See 09–19–6 Washer Hose Installation Note)
3	Bolt
4	Nut
5	Washer tank

4. Install in the reverse order of removal.

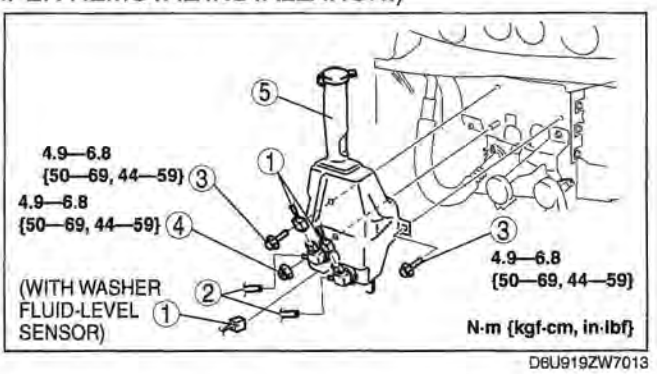

D6U919ZW7013

Washer Hose Installation Note

1. Install the washer hose by inserting it in the washer tank groove.

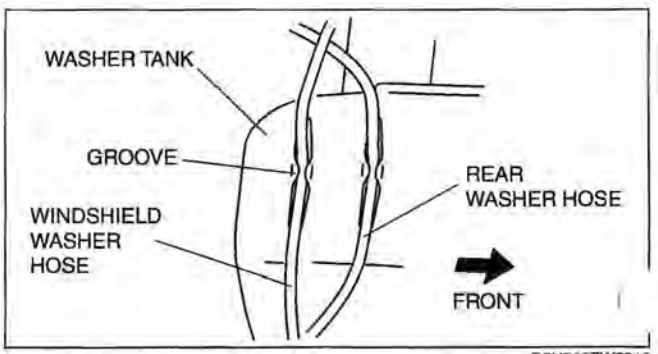

D6U919ZW7016

WASHER TANK REMOVAL/INSTALLATION [L3 WITH TC]

E6U091967480W03

1. Disconnect the negative battery cable.
2. Remove the front bumper. (See 09–10–10 FRONT BUMPER REMOVAL/INSTALLATION.)
   Remove in the order indicated in the table.

1	Bolt
2	Connector
3	Washer hose
4	Washer tank

4. Install in the reverse order of removal.

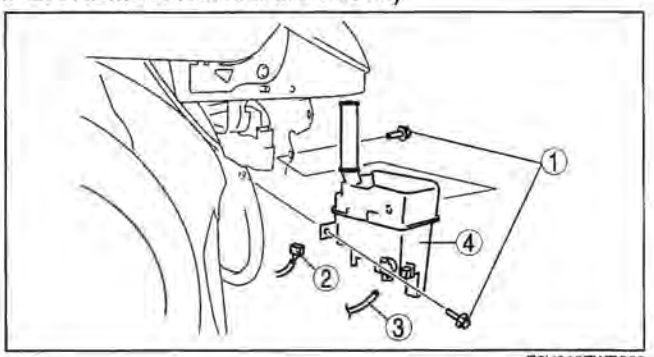

E6U919ZWB002

WINDSHIELD WASHER MOTOR REMOVAL/INSTALLATION

E6U091976670W01

1. Disconnect the negative battery cable.
2. Remove the front bumper. (See 09–10–10 FRONT BUMPER REMOVAL/INSTALLATION.)
3. Remove in the order indicated in the table.

1	Connector
2	Washer hose
3	Windshield washer motor
4	Grommet

4. Install in the reverse order of removal.

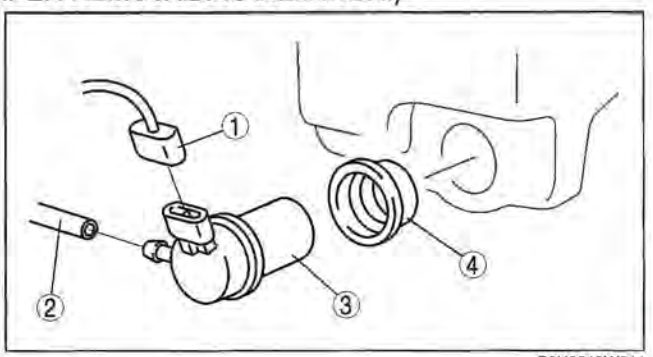

B6U0919W011

..INDSHIELD WASHER MOTOR REMOVAL/INSTALLATION [L3 WITH TC]

E6U091976670W03

1. Disconnect the negative battery cable.
2. Remove the washer tank. (See 09–19–7 WASHER TANK REMOVAL/INSTALLATION [L3 WITH TC].)
3. Remove in the order indicated in the table.

1	Windshield washer motor
2	Grommet

4. Install in the reverse order of removal.

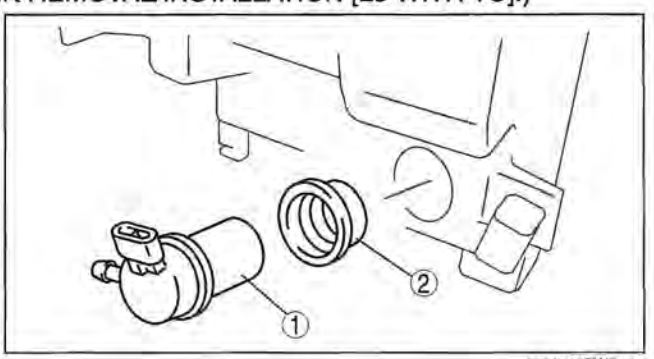

E6U919ZWB003

WINDSHIELD WASHER MOTOR INSPECTION

E6U091976670W02

1. Disconnect the negative battery cable.
2. Remove the front bumper. (See 09–10–10 FRONT BUMPER REMOVAL/INSTALLATION.)
3. Connect battery positive voltage to the motor terminal A and ground to the motor terminal B.
4. Verify that the windshield washer motor operates.
   - If the motor does not operate, replace the windshield washer motor.

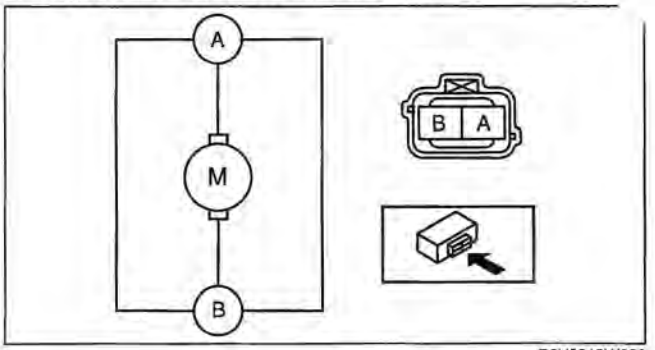

B6U0919W008

WINDSHIELD WASHER MOTOR INSPECTION [L3 WITH TC]

E6U091976670W04

1. Disconnect the negative battery cable.
2. Remove the washer tank. (See 09–19–7 WASHER TANK REMOVAL/INSTALLATION [L3 WITH TC].)
3. Connect battery positive voltage to the motor terminal B and ground to the motor terminal A.
4. Verify that the windshield washer motor operates.
   - If the motor does not operate, replace the windshield washer motor.

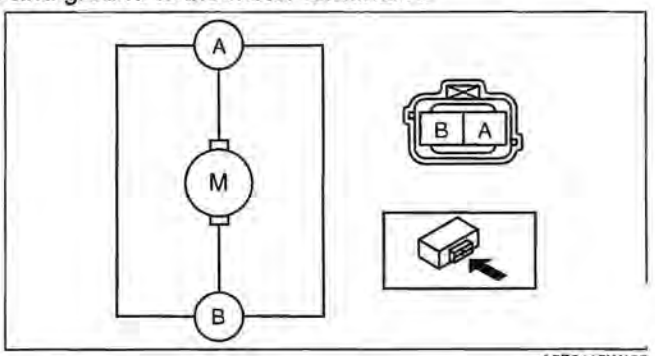

A6E8116W129

WASHER FLUID-LEVEL SENSOR REMOVAL/INSTALLATION

E6U091967488W01

1. Disconnect the negative battery cable.
2. Remove the washer tank. (See 09–19–6 WASHER TANK REMOVAL/INSTALLATION [SPORT SEDAN].)(See 09–19–6 WASHER TANK REMOVAL/INSTALLATION [5-DOOR, SPORT WAGON].)
3. Remove in the order indicated in the table.

1	Washer fluid-level sensor
2	Grommet

4. Install in the reverse order of removal.

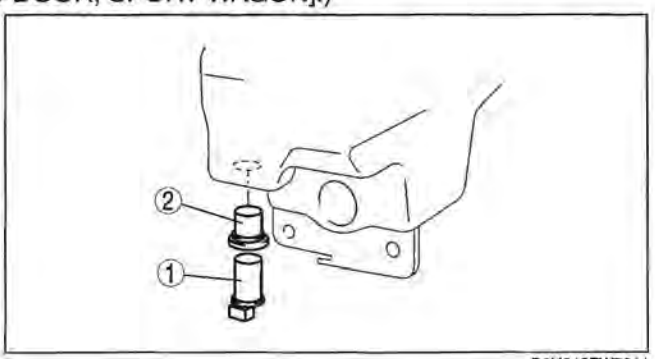

D6U919ZW7011

WASHER FLUID-LEVEL SENSOR REMOVAL/INSTALLATION [L3 WITH TC]

E6U091967488W03

1. Disconnect the negative battery cable.
2. Remove the washer tank. (See 09–19–7 WASHER TANK REMOVAL/INSTALLATION [L3 WITH TC].)
   Remove in the order indicated in the table.

1	Connector
2	Washer fluid-level sensor
3	Grommet

4. Install in the reverse order of removal.

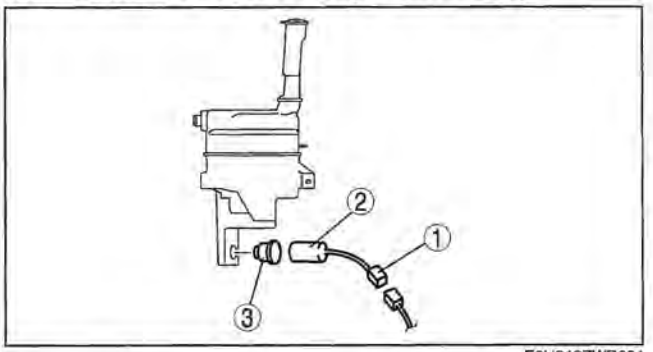

E6U919ZWB004

WASHER FLUID-LEVEL SENSOR INSPECTION

E6U091967488W02

1. Disconnect the negative battery cable.
2. Remove the front bumper. (See 09–10–10 FRONT BUMPER REMOVAL/INSTALLATION.)
3. Inspect for continuity between the washer fluid-level sensor terminals using an ohmmeter.
   - If not as specified, replace the washer fluid-level sensor.

O—O : Continuity

Fluid level	Terminal	
	A	B
Above low		
Below low	O	O

B6U0919W016

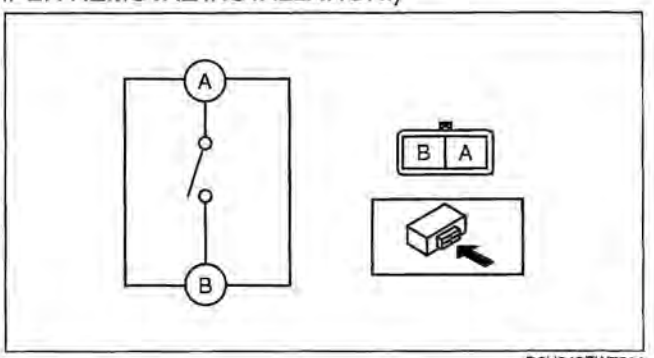

D6U919ZW7014

WIPER AND WASHER SWITCH REMOVAL/INSTALLATION

E6U091966122W01

1. Disconnect the negative battery cable.
2. Remove the column cover.
3. Remove in the order indicated in the table.

1	Connector
2	Screw
3	Wiper and washer switch

4. Install in the reverse order of removal.

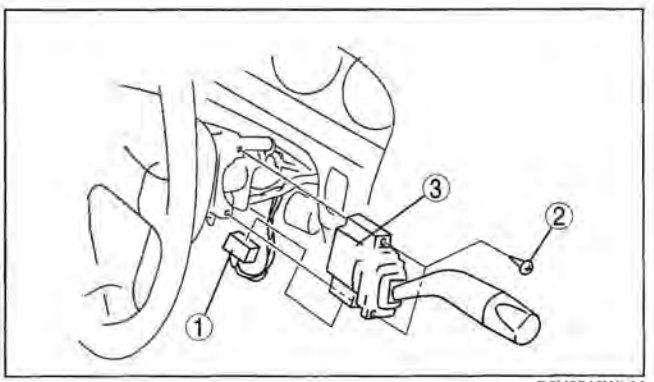

B6U0919W004

WIPER AND WASHER SWITCH INSPECTION

E6U091986122W02

1. Remove the wiper and washer switch. (See 09–19–9 WIPER AND WASHER SWITCH REMOVAL/INSTALLATION.)
2. Inspect for continuity between the wiper and washer switch terminals using an ohmmeter.
   - If not as specified, replace the wiper and washer switch.

O—O : Continuity

Switch position		One-touch	Terminal				
			A	C	E	K	O
Wiper switch	OFF	OFF		O		O	
		ON			O	O	
	INT			O		O	
	1				O	O	
	2				O		O
Washer switch	ON		O			O	

B6U0919W006

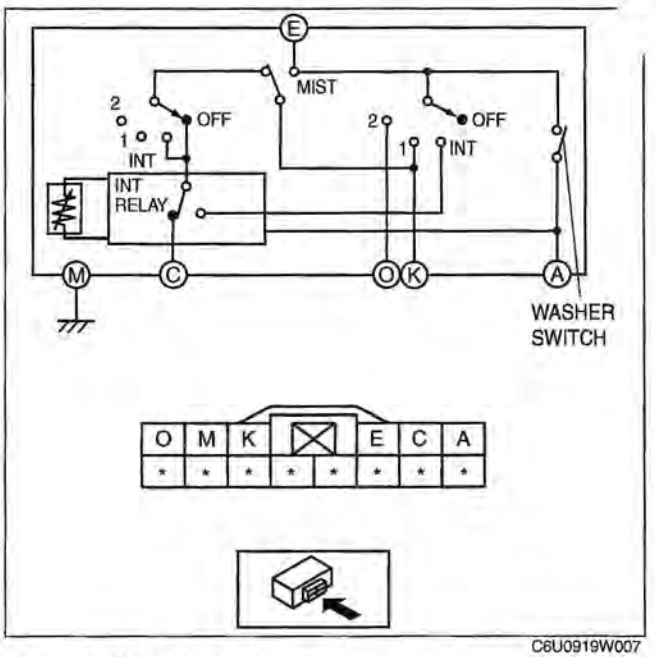

C6U0919W007

REAR WIPER AND WASHER SWITCH INSPECTION [5-DOOR, SPORT WAGON]

E6U091986122W03

1. Remove the wiper and washer switch. (See 09–19–9 WIPER AND WASHER SWITCH REMOVAL/INSTALLATION.)
2. Inspect for continuity between the wiper and washer switch terminals using an ohmmeter.
   - If not as specified, replace the wiper and washer switch.

O—O : Continuity

Switch position	Terminal			
	L	H	J	F
OFF				
Rear wiper	O			O
Rear wiper INT		O		O
Rear wiper and washer	O		O	O
Rear washer			O	O

C6U919ZW006

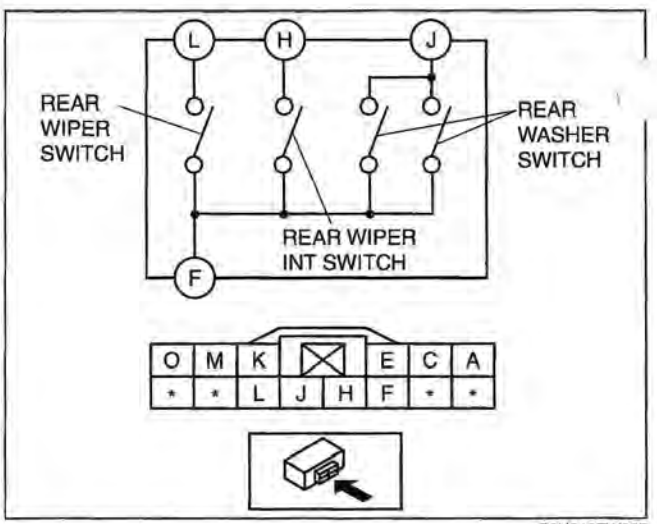

C6U919ZW007

WINDSHIELD WASHER NOZZLE REMOVAL/INSTALLATION

E6U091967510W01

1. Remove the hood insulator.
2. Remove the windshield washer hose from the windshield washer nozzle.
3. Squeeze the tabs of the windshield washer nozzle.
4. Pull the windshield washer nozzle out to remove it.
5. Install in the reverse order of removal.

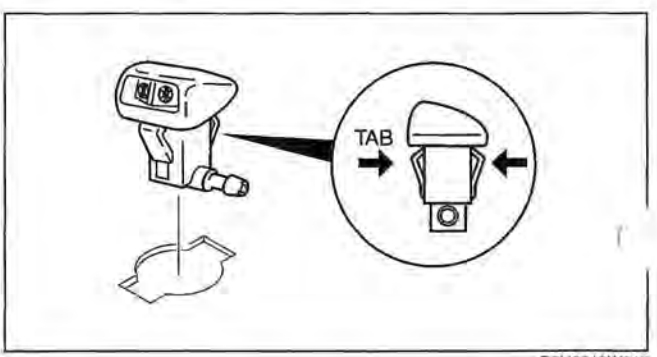

B6U0919W015

WINDSHIELD WASHER NOZZLE REMOVAL/INSTALLATION [L3 WITH TC]

E6U091967510W02

1. Remove the cowl grille. (See 09–16–4 COWL GRILLE REMOVAL/INSTALLATION [L3 WITH TC].)
2. Remove the windshield washer hose from the windshield washer nozzle.
   Compress the tabs of the windshield washer nozzle.
3. Pull the windshield washer nozzle out to remove it.
5. Install in the reverse order of removal.

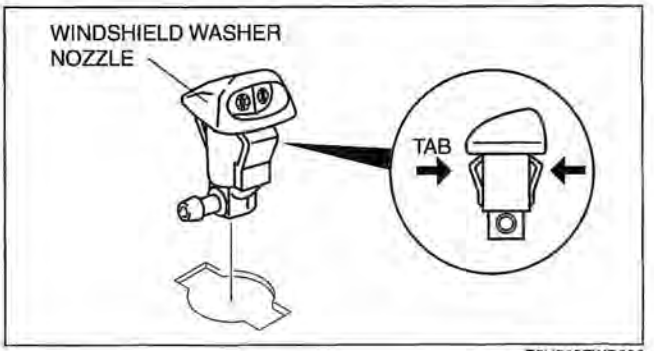

E6U919ZWB006

WINDSHIELD WASHER HOSE REMOVAL/INSTALLATION

E6U091950630W01

1. Remove the hood insulator.
2. Partially peel off the right side mud guard.
3. Remove in the order indicated in the table.

1	Clip
2	Joint pipe
3	Windshield washer hose (See 09–19–11 Windshield Washer Hose Installation Note)

4. Install in the reverse order of removal.

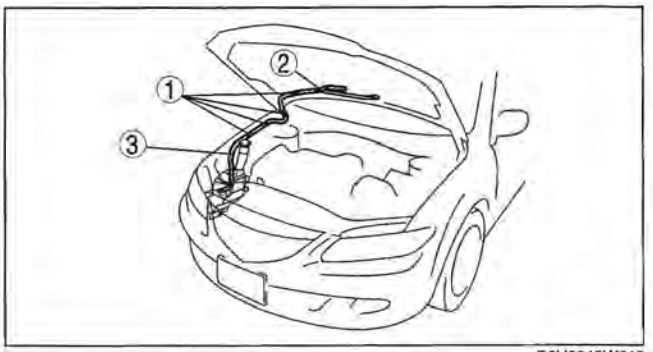

B6U0919W013

Windshield Washer Hose Installation Note

1. Install the windshield washer hose by inserting it in the washer tank groove.

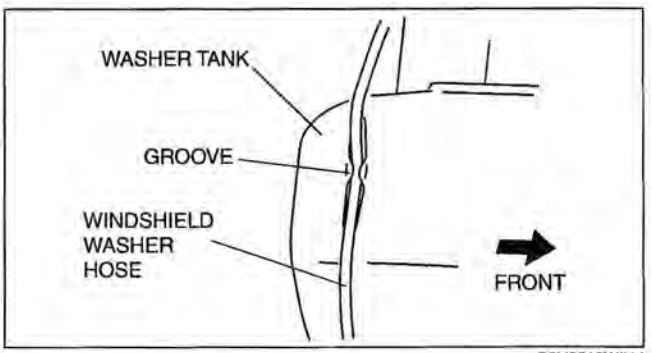

B6U0919W014

WINDSHIELD WASHER HOSE REMOVAL/INSTALLATION [L3 WITH TC]

E6U091950630W02

1. Remove the cowl grille. (See 09–16–4 COWL GRILLE REMOVAL/INSTALLATION [L3 WITH TC].)
2. Partially peel off the right side mud guard.
3. Remove in the order indicated in the table.

1	Clip
2	Joint pipe
3	Windshield washer hose

4. Install in the reverse order of removal.

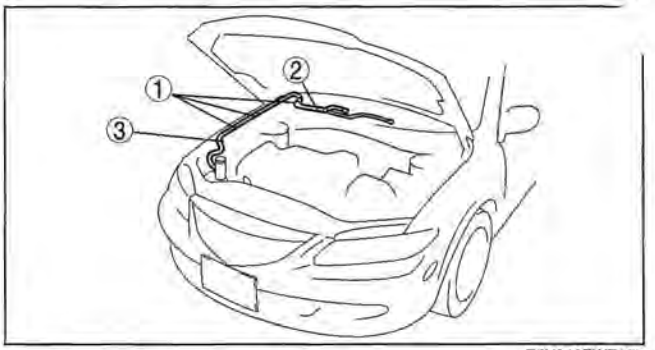

E6U919ZWB007

REAR WASHER MOTOR REMOVAL/INSTALLATION [5-DOOR, SPORT WAGON]

E6U091976672W01

1. Disconnect the negative battery cable.
2. Remove the front bumper. (See 09–10–10 FRONT BUMPER REMOVAL/INSTALLATION.)
3. Remove in the order indicated in the table.

1	Connector
2	Washer hose
3	Rear washer motor
4	Grommet

4. Install in the reverse order of removal.

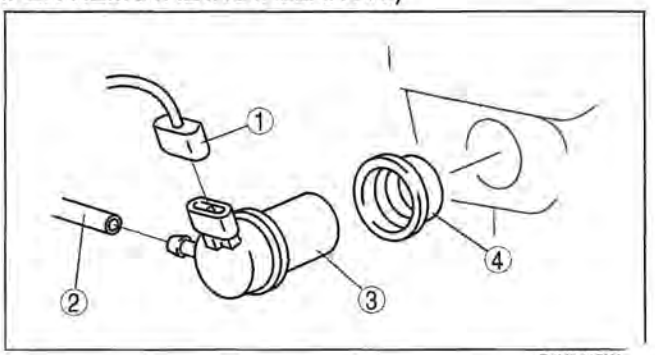

C6U0919W

REAR WASHER MOTOR INSPECTION [5-DOOR, SPORT WAGON]

E6U091976672W02

1. Disconnect the negative battery cable.
2. Remove the front bumper. (See 09–10–10 FRONT BUMPER REMOVAL/INSTALLATION.)
3. Connect battery positive voltage to the motor terminal B and ground to the motor terminal A.
4. Verify that the rear washer motor operates.
   - If the motor does not operate, replace the rear washer motor.

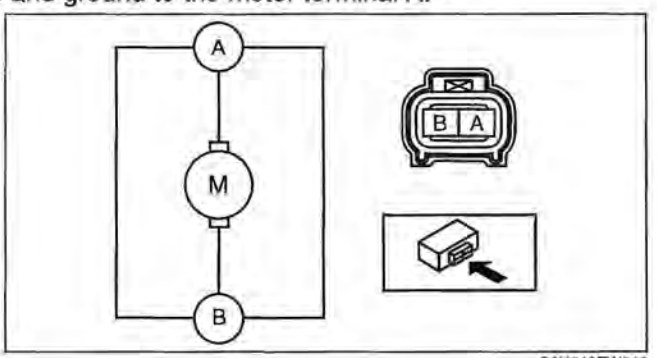

C6U919ZW010

REAR WIPER MOTOR REMOVAL/INSTALLATION [5-DOOR, SPORT WAGON]

E6U091967450W01

1. Disconnect the negative battery cable.
2. Remove the rear wiper arm and blade. (See 09–19–14 REAR WIPER ARM AND BLADE REMOVAL/INSTALLATION [5-DOOR, SPORT WAGON].)
3. Remove the liftgate lower trim. (See 09–17–23 LIFTGATE LOWER TRIM REMOVAL/INSTALLATION [5-DOOR, SPORT WAGON].)
4. Remove in the order indicated in the table.

1	Connector
2	Outer bushing (5-Door)
3	Bolt
4	Rear wiper motor
5	Outer bushing (Sport Wagon)

5. Install in the reverse order of removal.
6. Adjust the rear wiper arm and blade. (See 09–19–15 REAR WIPER ARM AND BLADE ADJUSTMENT [5-DOOR, SPORT WAGON].)

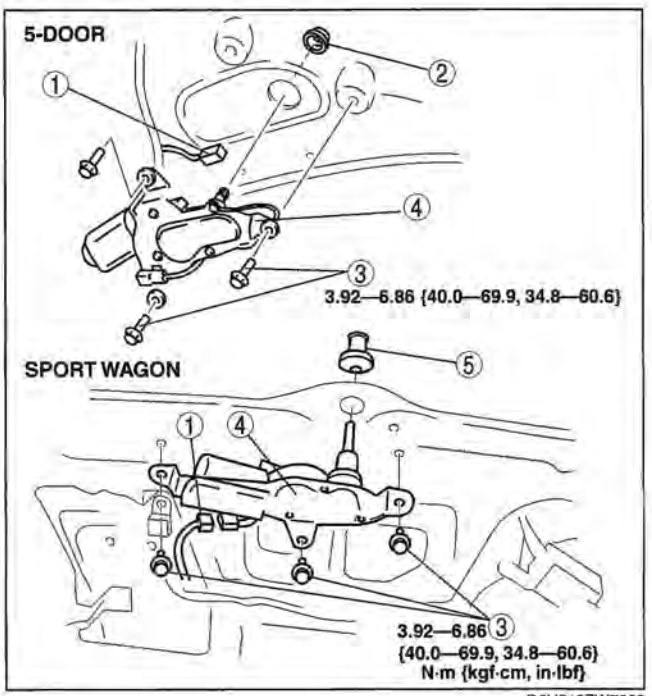

D6U919ZW7002

09–19

REAR WIPER MOTOR INSPECTION [5-DOOR, SPORT WAGON]

E6U091967450W02

1. Disconnect the negative battery cable.
2. Remove the liftgate lower trim. (See 09–17–23 LIFTGATE LOWER TRIM REMOVAL/INSTALLATION [5-DOOR, SPORT WAGON].)
3. Disconnect the rear wiper motor connector.
4. Connect battery positive voltage to the rear wiper motor terminal A, and ground the rear wiper motor terminal B to a bare metal part of the vehicle.
5. Verify that the rear wiper motor operates.

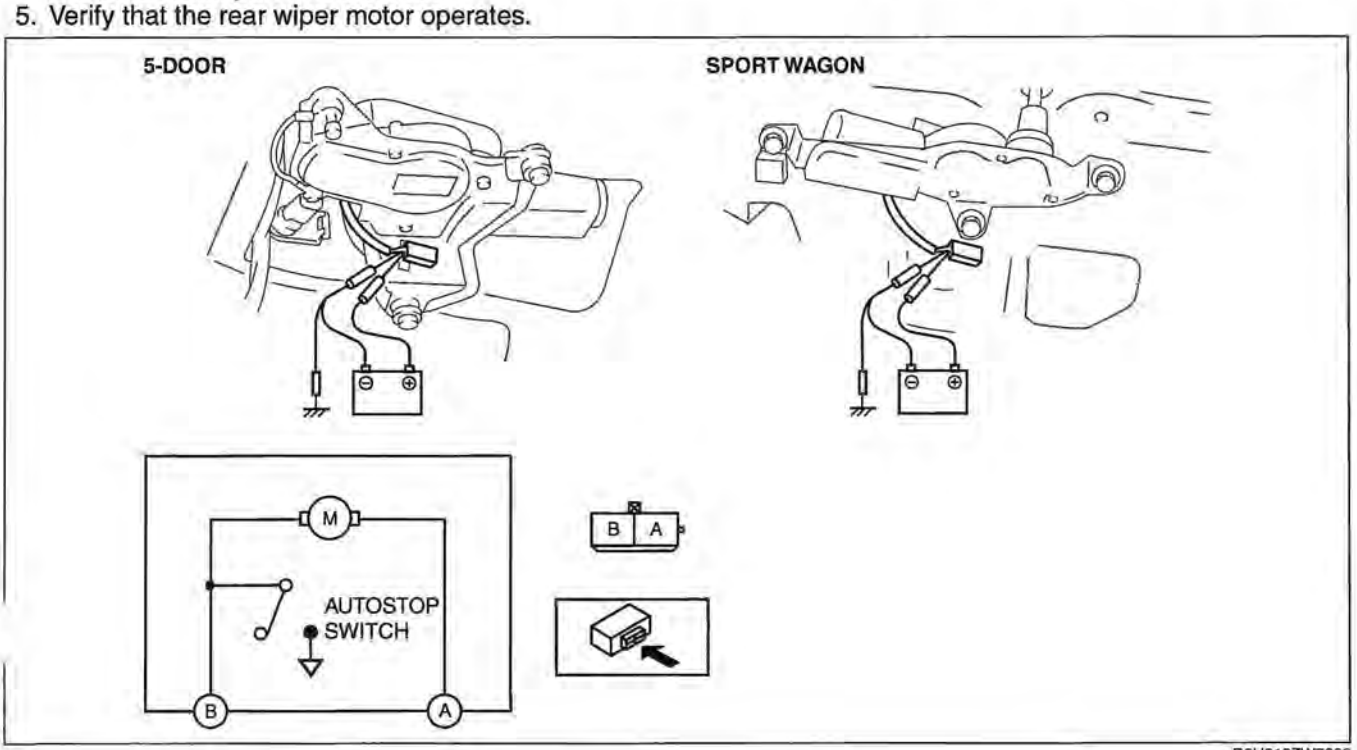

D6U919ZW7003

6. Disconnect the ground to the terminal B while the rear wiper is operating.
7. Verify that the rear wiper stops in the park position.

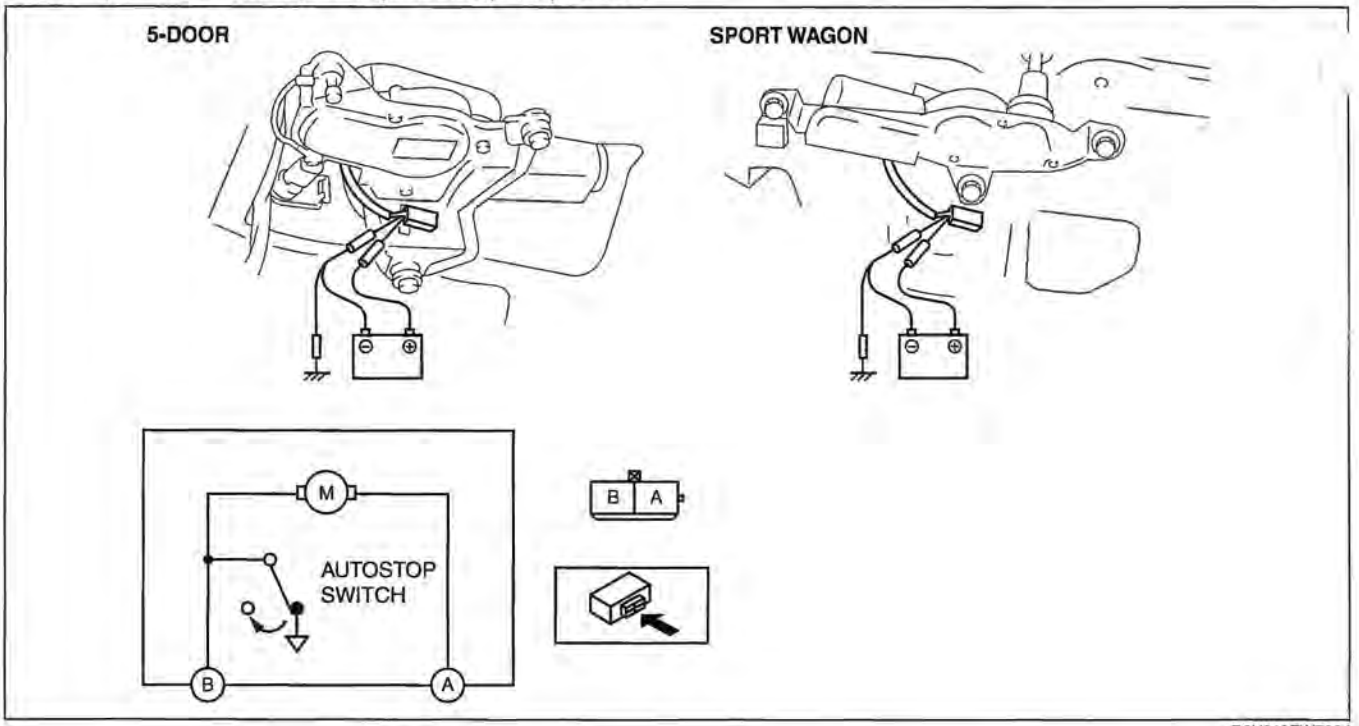

D6U919ZW7004

- If not as specified, replace the rear wiper motor.

REAR WIPER ARM AND BLADE REMOVAL/INSTALLATION [5-DOOR, SPORT WAGON]

E6U09196742OW01

1. Remove in the order indicated in the table.

1	Cap
2	Nut
3	Rear wiper arm (See 09–19–15 Rear Wiper Arm Installation Note)
4	Rear wiper blade
5	Rubber brush
6	Backing plate

2. Install in the reverse order of removal.
3. Adjust the rear wiper arm and blade. (See 09–19–15 REAR WIPER ARM AND BLADE ADJUSTMENT [5-DOOR, SPORT WAGON].)

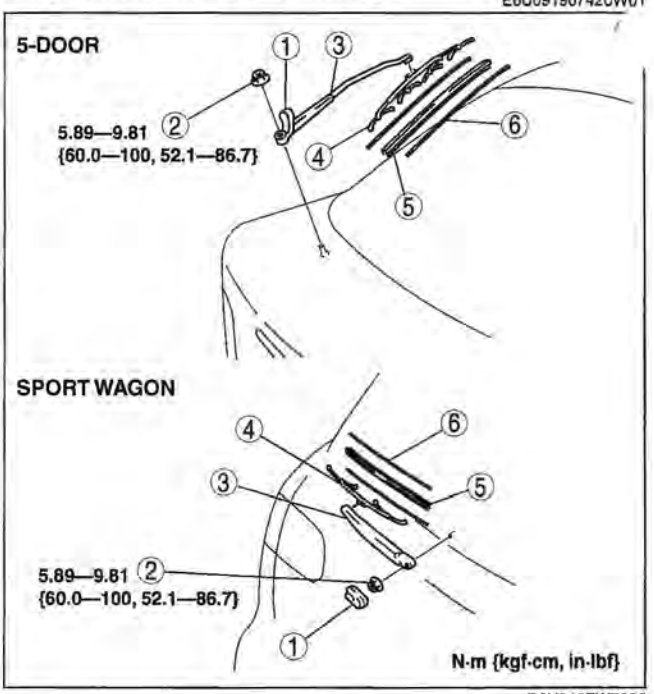

D6U919ZW7005

Rear Wiper Arm Installation Note

1. Clean the rear wiper arm connector shaft using a wire brush before installing the rear wiper arm.

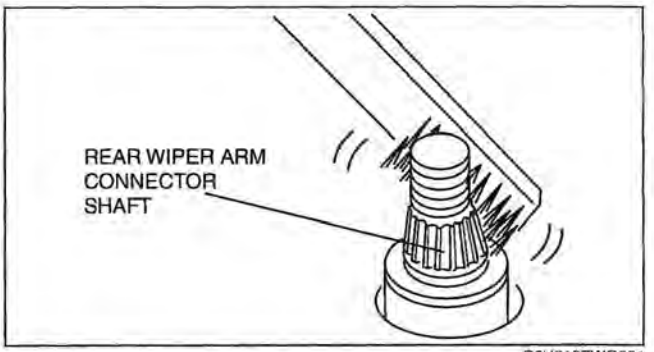

C6U919ZWC001

REAR WIPER ARM AND BLADE ADJUSTMENT [5-DOOR, SPORT WAGON]

E6U091967420W02

1. Operate the rear wiper motor to set the wiper in the park position.
2. Set the rear wiper arm onto the ceramic end line.

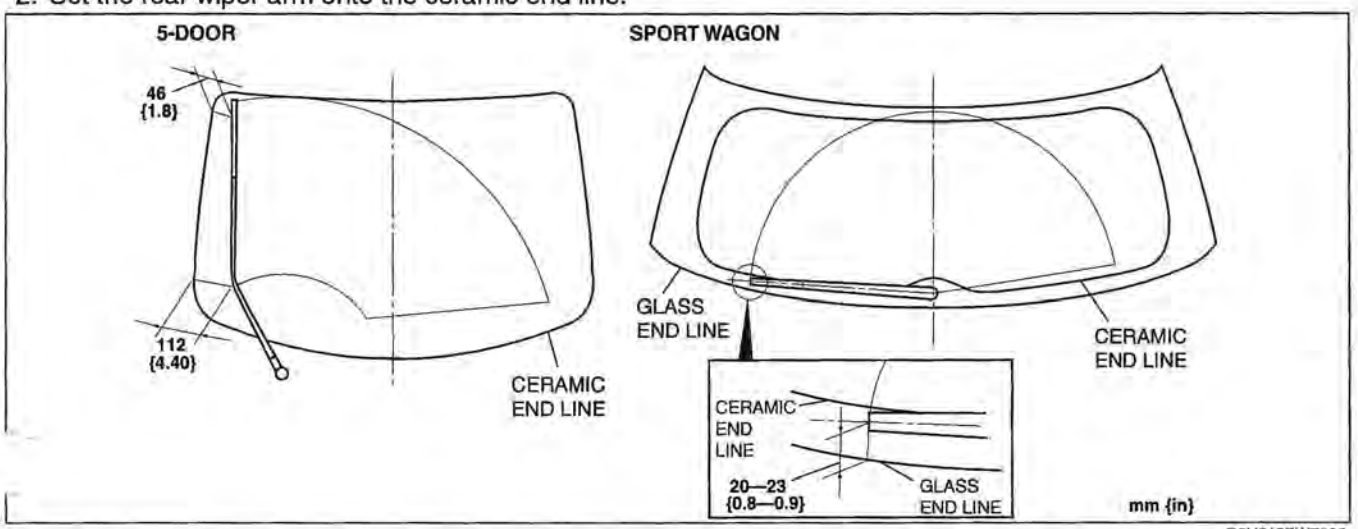

D6U919ZW7006

REAR WASHER NOZZLE REMOVAL/INSTALLATION [5-DOOR, SPORT WAGON]

E6U091967511W01

1. Disconnect the negative battery cable.
2. Remove the liftgate upper trim. (See 09–17–21 LIFTGATE UPPER TRIM REMOVAL/INSTALLATION [5-DOOR, SPORT WAGON].)
3. Remove the high-mount brake light (In-vehicle-type). (Sport Wagon)
4. Remove the rear washer hose from the rear washer nozzle.
5. Squeeze the tabs of the rear washer nozzle.
6. Pull the rear washer nozzle out to remove it.
7. Install in the reverse order of removal.
8. Adjust the rear washer nozzle. (See 09–19–16 REAR WASHER NOZZLE ADJUSTMENT [5-DOOR, SPORT WAGON].)

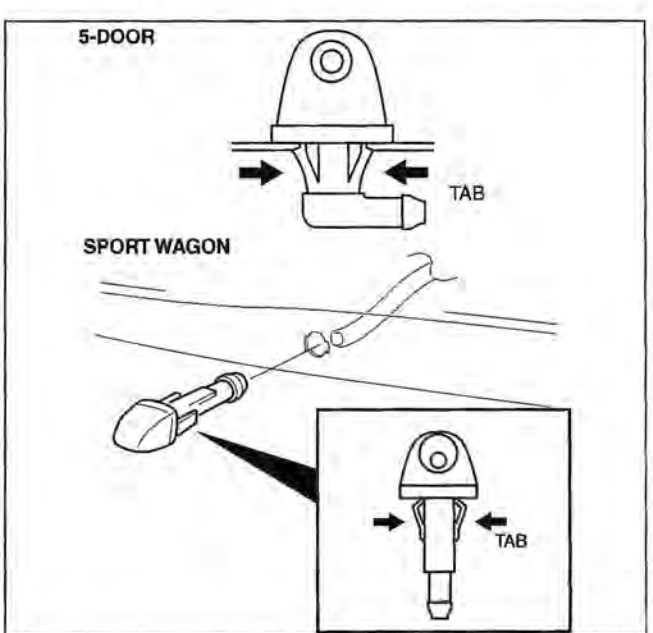

D6U919ZW7007

REAR WASHER NOZZLE ADJUSTMENT [5-DOOR, SPORT WAGON]

E6U091967511W02

1. Insert a needle or an equivalent tool into the spray hole of the rear washer nozzle and adjust the nozzle direction as shown.

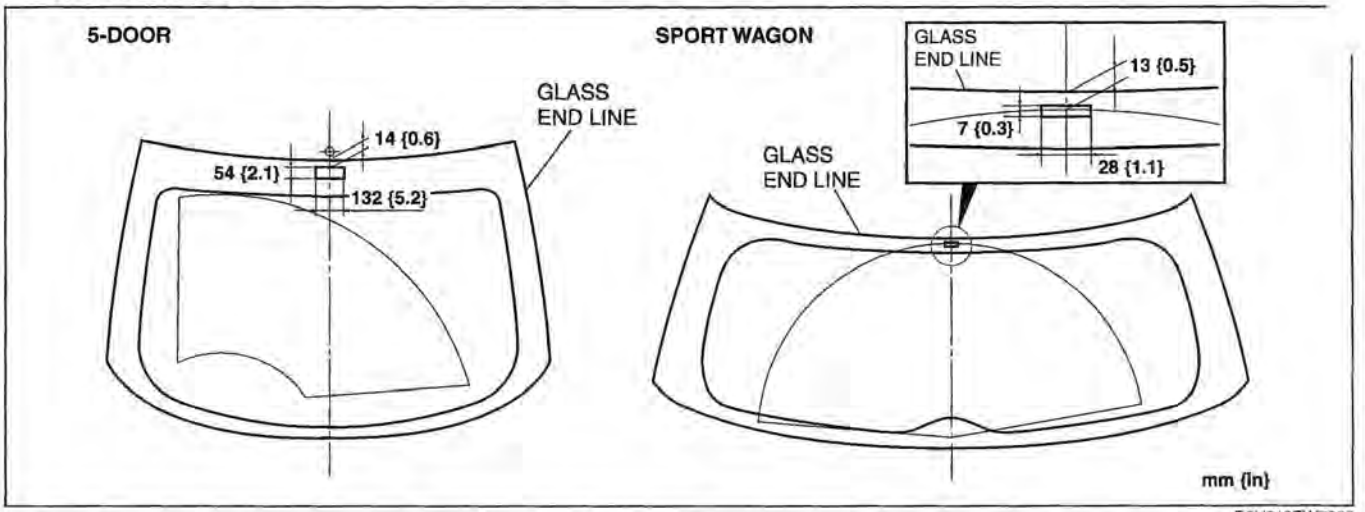

D6U919ZW7008

REAR WASHER HOSE REMOVAL/INSTALLATION [5-DOOR, SPORT WAGON]

E6U091967471W01

1. Disconnect the negative battery cable.
2. Remove the washer tank. (See 09–19–6 WASHER TANK REMOVAL/INSTALLATION [5-DOOR, SPORT WAGON].)
3. Partially peel off the right side mud guard.
4. Remove rear washer hose No.1 from the clips.
5. Remove rear washer hose No.1 and joint pipe A.
6. Remove the A-pillar trim. (See 09–17–10 A-PILLAR TRIM REMOVAL/INSTALLATION.)

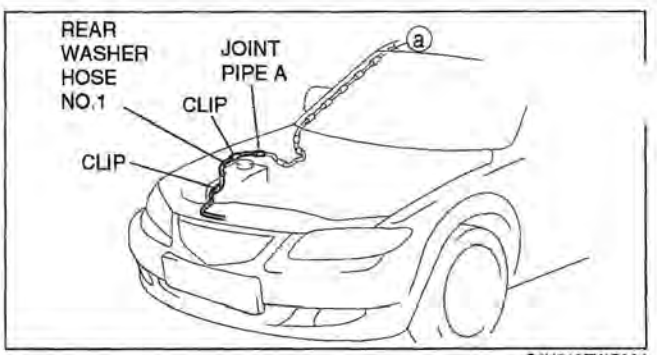

C6U919ZWC004

7. Remove rear washer hose No.2 from clip A.
8. Remove clips B from the body.
9. Remove rear washer hose No.2 and joint pipes B.
10. Remove the C-pillar trim.(5-Door)(See 09–17–14 C-PILLAR TRIM REMOVAL/INSTALLATION.)
11. Remove the D-pillar trim.(Sport Wagon)
12. Remove the liftgate upper trim. (See 09–17–21 LIFTGATE UPPER TRIM REMOVAL/ INSTALLATION [5-DOOR, SPORT WAGON].)

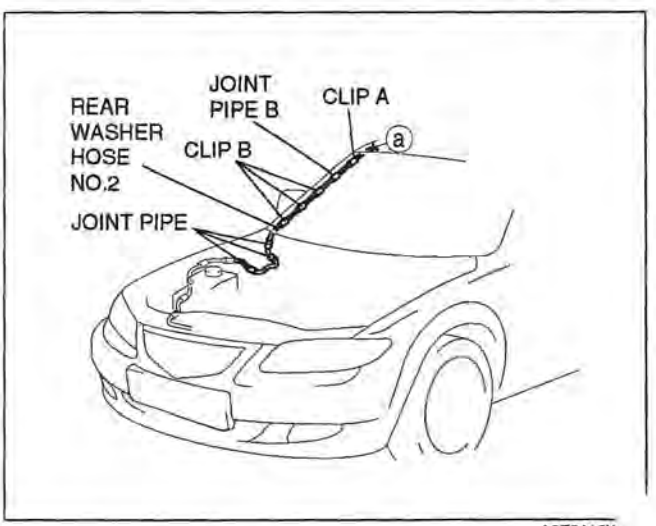

A6E8116W

13. Remove rear washer hose No.3 from clip C.
14. Remove clips D from the body. (5-Door)
15. Remove rear washer hose No.3 and joint pipe C.
    Remove the headliner. (See 09–17–24 HEADLINER REMOVAL/INSTALLATION.)

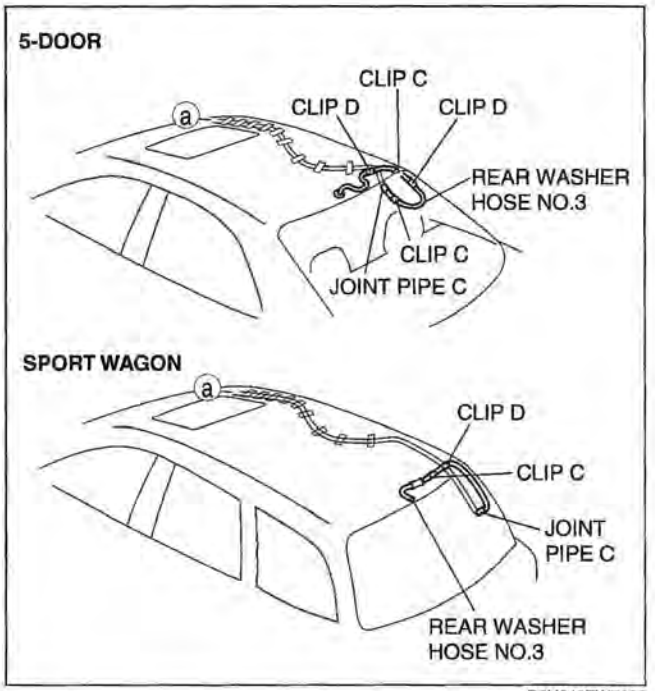

D6U919ZW7009

17. Remove the tape from rear washer hose No.4.
18. Install in the reverse order of removal.

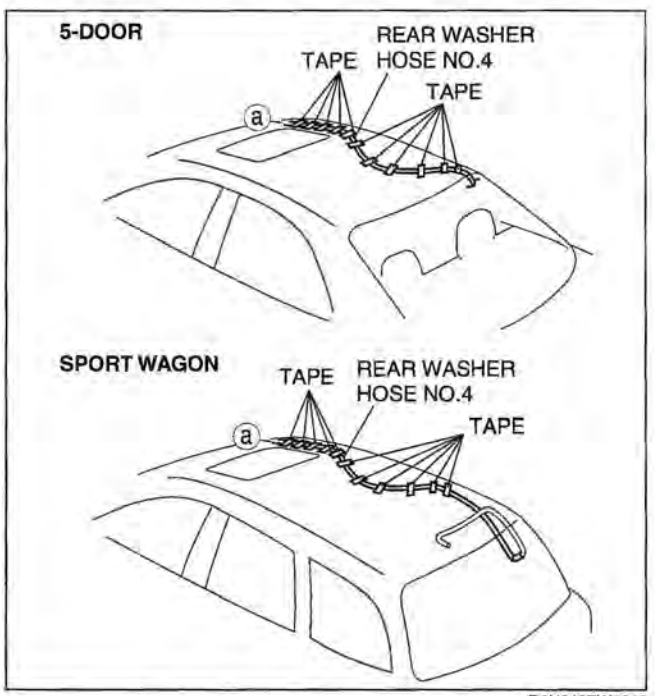

D6U919ZW7010

09–20 ENTERTAINMENT

ENTERTAINMENT LOCATION INDEX . . 09–20–2
Car-navigation System 09–20–3
CENTER PANEL UNIT
REMOVAL/INSTALLATION 09–20–4
Bolt Removal Note 09–20–4
Center Panel Unit Removal Note 09–20–5
CENTER PANEL UNIT
DISASSEMBLY/ASSEMBLY 09–20–5
AUDIO UNIT
DISASSEMBLY/ASSEMBLY 09–20–6
CAR-NAVIGATION UNIT
REMOVAL/INSTALLATION 09–20–6
LCD UNIT
REMOVAL/INSTALLATION 09–20–6
LCD Unit Removal Note 09–20–7
AUDIO CONTROL SWITCH
REMOVAL/INSTALLATION 09–20–7
AUDIO CONTROL SWITCH
INSPECTION 09–20–8
AUDIO AMPLIFIER
REMOVAL/INSTALLATION 09–20–8
FRONT DOOR SPEAKER
REMOVAL/INSTALLATION 09–20–9
Front Door Speaker
Installation Note 09–20–9
FRONT DOOR SPEAKER
INSPECTION 09–20–9
REAR DOOR SPEAKER
REMOVAL/INSTALLATION 09–20–10
Rear Door Speaker
Installation Note 09–20–10
REAR DOOR SPEAKER
INSPECTION 09–20–10
TWEETER
REMOVAL/INSTALLATION 09–20–10
TWEETER INSPECTION 09–20–11
WOOFER REMOVAL/INSTALLATION
[SPORT SEDAN] 09–20–11
WOOFER REMOVAL/INSTALLATION
[5-DOOR, SPORT WAGON] 09–20–11
WOOFER INSPECTION
[SPORT SEDAN] 09–20–12
WOOFER INSPECTION
[5-DOOR, SPORT WAGON] 09–20–12
CONDENSER
REMOVAL/INSTALLATION
[SPORT SEDAN] 09–20–13
CONDENSER
REMOVAL/INSTALLATION
[5-DOOR] 09–20–13
CONDENSER REMOVAL/INSTALLATION
[SPORT WAGON] 09–20–13
CENTER ROOF ANTENNA
REMOVAL/INSTALLATION 09–20–14
CENTER ROOF ANTENNA
INSPECTION 09–20–14
MICROPHONE
REMOVAL/INSTALLATION 09–20–14
GPS ANTENNA
REMOVAL/INSTALLATION 09–20–14
ANTENNA FEEDER LOCATION
[SPORT SEDAN] 09–20–15
ANTENNA FEEDER LOCATION
[5-DOOR] 09–20–15
ANTENNA FEEDER LOCATION
[SPORT WAGON] 09–20–16
FRONT ANTENNA FEEDER
INSPECTION 09–20–16
REAR ANTENNA FEEDER
INSPECTION [SPORT SEDAN] 09–20–17
REAR ANTENNA FEEDER
INSPECTION [5-DOOR] 09–20–17
REAR ANTENNA FEEDER
INSPECTION [SPORT WAGON] 09–20–18
GPS ANTENNA FEEDER
INSPECTION 09–20–18
ACCESSORY SOCKET
REMOVAL/INSTALLATION 09–20–18
Front 09–20–18
Rear 09–20–18
ACCESSORY SOCKET
INSPECTION 09–20–19

ENTERTAINMENT LOCATION INDEX

E6U092000001W02

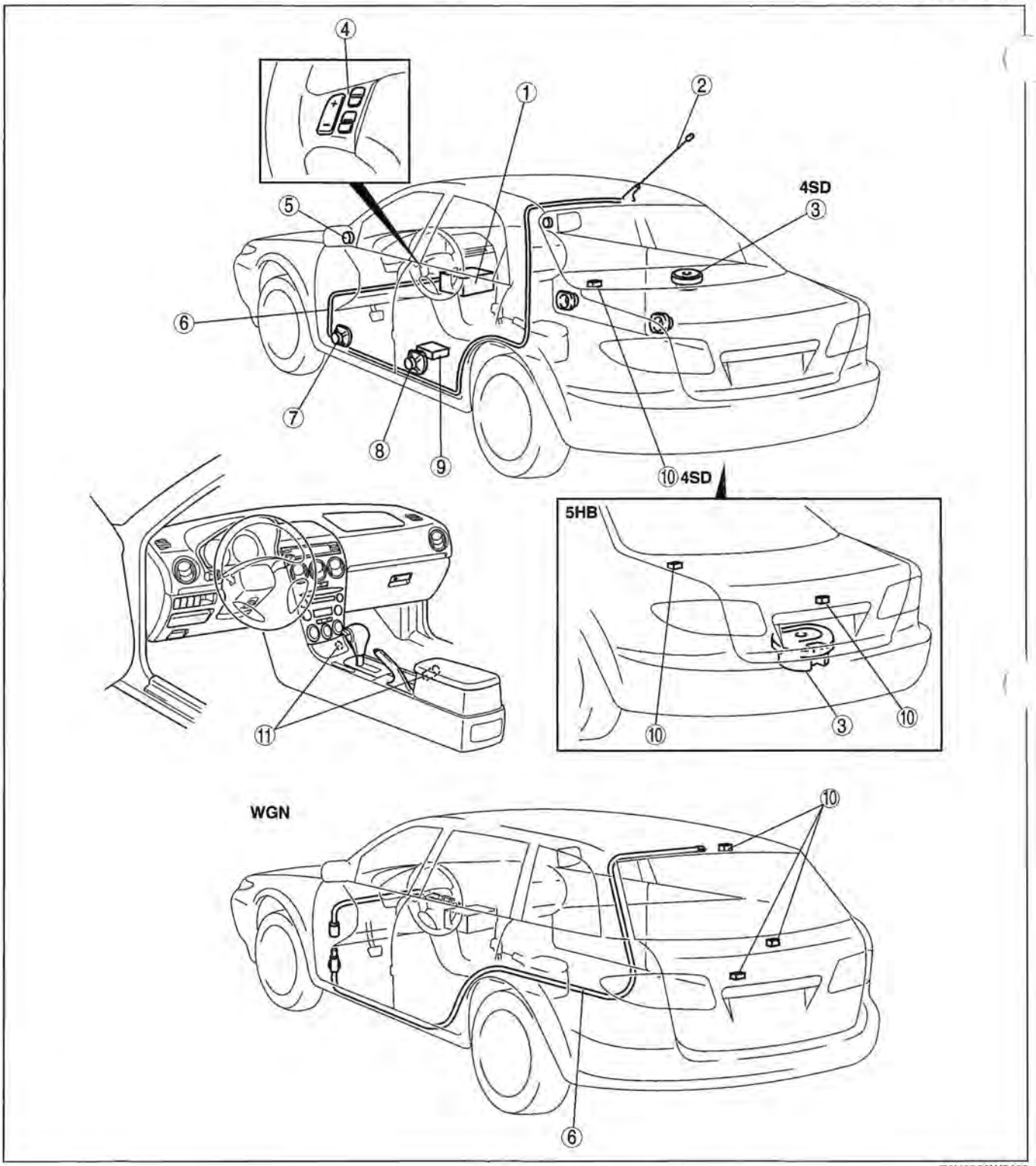

E6U0920W5109

1	Audio unit (See 09–20–4 CENTER PANEL UNIT REMOVAL/INSTALLATION.) (See 09–20–5 CENTER PANEL UNIT DISASSEMBLY/ASSEMBLY.) (See 09–20–6 AUDIO UNIT DISASSEMBLY/ASSEMBLY.)

2	Center roof antenna (See 09–20–14 CENTER ROOF ANTENNA REMOVAL/INSTALLATION.) (See 09–20–14 CENTER ROOF ANTENNA INSPECTION.)

3	Woofer (See 09–20–11 WOOFER REMOVAL/ INSTALLATION [SPORT SEDAN].) (See 09–20–11 WOOFER REMOVAL/ INSTALLATION [5-DOOR, SPORT WAGON].) (See 09–20–12 WOOFER INSPECTION [SPORT SEDAN].) (See 09–20–12 WOOFER INSPECTION [5-DOOR, SPORT WAGON].)
4	Audio control switch (See 09–20–7 AUDIO CONTROL SWITCH REMOVAL/INSTALLATION.) (See 09–20–8 AUDIO CONTROL SWITCH INSPECTION.)
5	Tweeter (See 09–20–10 TWEETER REMOVAL/ INSTALLATION.) (See 09–20–11 TWEETER INSPECTION.)
6	Antenna feeder (See 09–20–15 ANTENNA FEEDER LOCATION [SPORT SEDAN].) (See 09–20–15 ANTENNA FEEDER LOCATION [5-DOOR].) (See 09–20–16 ANTENNA FEEDER LOCATION [SPORT WAGON].) (See 09–20–16 FRONT ANTENNA FEEDER INSPECTION.) (See 09–20–17 REAR ANTENNA FEEDER INSPECTION [SPORT SEDAN].) (See 09–20–17 REAR ANTENNA FEEDER INSPECTION [5-DOOR].) (See 09–20–18 REAR ANTENNA FEEDER INSPECTION [SPORT WAGON].)
7	Front door speaker (See 09–20–9 FRONT DOOR SPEAKER REMOVAL/INSTALLATION.) (See 09–20–9 FRONT DOOR SPEAKER INSPECTION.)
8	Rear door speaker (See 09–20–10 REAR DOOR SPEAKER REMOVAL/INSTALLATION.) (See 09–20–10 REAR DOOR SPEAKER INSPECTION.)
9	Audio amplifier (See 09–20–8 AUDIO AMPLIFIER REMOVAL/ INSTALLATION.)
10	Condenser (See 09–20–13 CONDENSER REMOVAL/ INSTALLATION [SPORT SEDAN].) (See 09–20–13 CONDENSER REMOVAL/ INSTALLATION [5-DOOR].) (See 09–20–13 CONDENSER REMOVAL/ INSTALLATION [SPORT WAGON].)
11	Accessory socket (See 09–20–18 ACCESSORY SOCKET REMOVAL/ INSTALLATION.) (See 09–20–19 ACCESSORY SOCKET INSPECTION.)

Car-navigation System

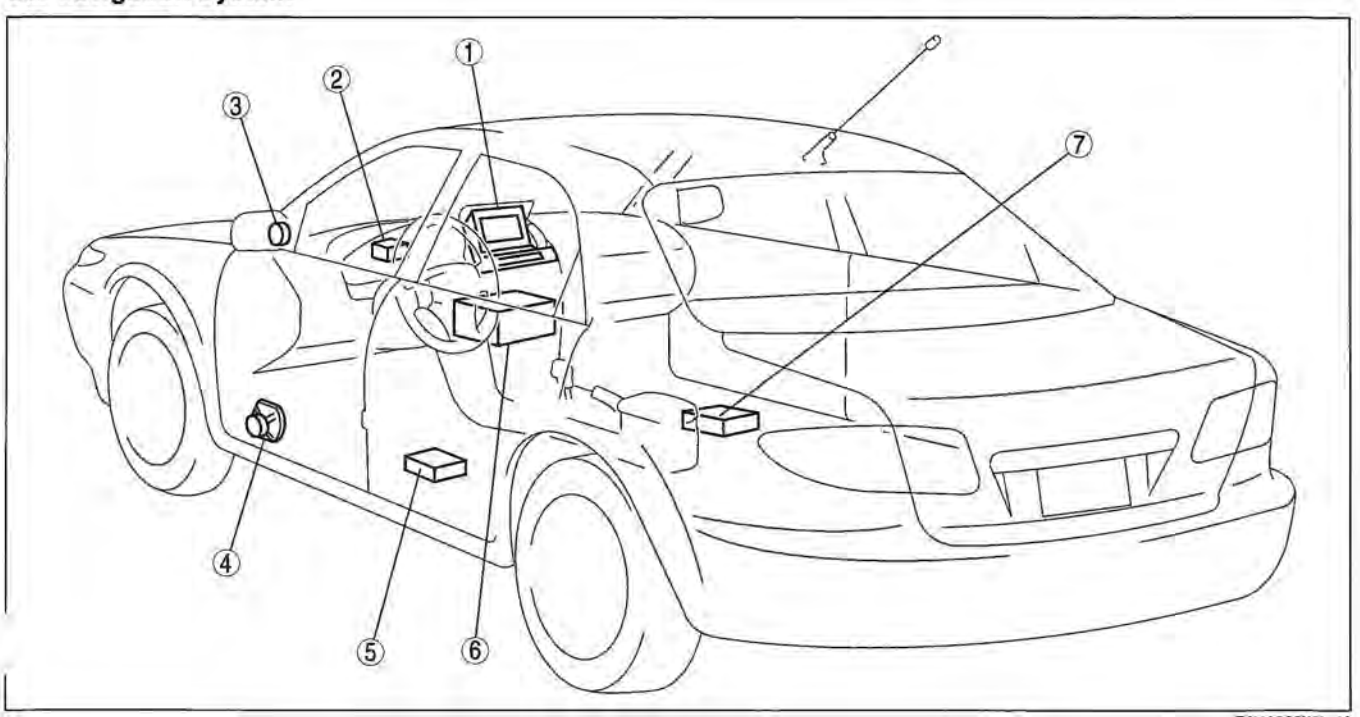

E6U0920WS110

1	LCD unit (See 09–20–6 LCD UNIT REMOVAL/ INSTALLATION.)
2	GPS antenna (See 09–20–14 GPS ANTENNA REMOVAL/ INSTALLATION.)
3	Tweeter (See 09–20–10 TWEETER REMOVAL/ INSTALLATION.) (See 09–20–11 TWEETER INSPECTION.)
4	Front door speaker (See 09–20–9 FRONT DOOR SPEAKER REMOVAL/INSTALLATION.) (See 09–20–9 FRONT DOOR SPEAKER INSPECTION.)
5	Audio amplifier (See 09–20–8 AUDIO AMPLIFIER REMOVAL/ INSTALLATION.)
6	Audio unit (See 09–20–4 CENTER PANEL UNIT REMOVAL/ INSTALLATION.) (See 09–20–5 CENTER PANEL UNIT DISASSEMBLY/ASSEMBLY.) (See 09–20–6 AUDIO UNIT DISASSEMBLY/ ASSEMBLY.)
7	Car-navigation unit (See 09–20–6 CAR-NAVIGATION UNIT REMOVAL/ INSTALLATION.)

CENTER PANEL UNIT REMOVAL/INSTALLATION

E6U092066900W01

1. Disconnect the negative battery cable.
2. Remove the glove compartment. (See 09–17–9 GLOVE COMPARTMENT REMOVAL/INSTALLATION.)
3. Remove the console. (See 09–17–8 CONSOLE REMOVAL/INSTALLATION.)
4. Remove in the order indicated in the table.

1	Dial (manual A/C only)
2	Screw (manual A/C only)
3	Screw
4	Bolt (See 09–20–4 Bolt Removal Note.)
5	Center panel unit (See 09–20–5 Center Panel Unit Removal Note.)
6	Connector
7	Antenna feeder
8	Wiring harness

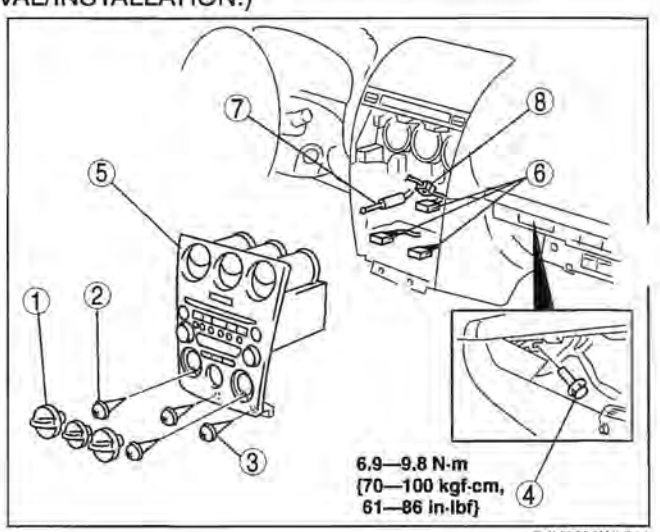

E6U0920W5111

5. Install in the reverse order of removal.

Caution

- **Make certain that the wiring harness and antenna feeder are not caught between the unit and dashboard. If the harness or the antenna feeder is caught between the unit and dashboard, it may cause trouble or malfunctions.**

Bolt Removal Note

1. Attach protective tape to the bracket installed to the dashboard.

Caution

- **Removing the bolt without attaching protective tape to the bracket may cause injury to your hand. Always attach protective tape to the bracket when removing the bolt.**

2. Remove the Bolt.

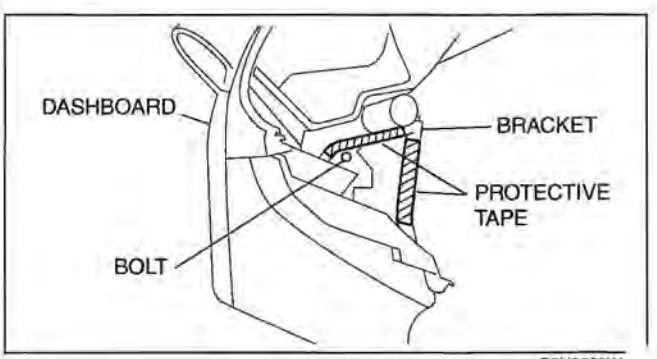

B6U0920W

Center Panel Unit Removal Note

1. Pull the center panel unit toward you, then disengage clips A from the dashboard, and remove the center panel unit.

Caution

- **Verify that bolt has been removed when pulling the center panel unit outward. If the center panel unit is pulled with bolt installed, stress will be applied to the connectors inside the panel which may cause a malfunction.**

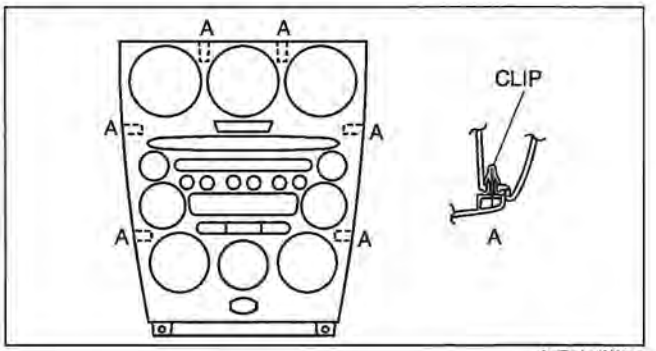

A6E8124W029

CENTER PANEL UNIT DISASSEMBLY/ASSEMBLY

E6U092066900W02

Caution

- **Before disassembling the center panel unit, spread a cloth on the floor to put the disassembled parts on. This protects the surface of the panel from scratches or dirt.**

1. Remove the center panel unit. (See 09–20–4 CENTER PANEL UNIT REMOVAL/INSTALLATION.)
2. Remove in the order indicated in the table.

1	Screw
2	Audio unit
3	Screw
4	Circuit board (manual A/C only)
5	Bracket
6	Cover (lower module)
7	Screw
8	Bracket (full-auto A/C only)
9	Screw (full-auto A/C only)
10	Climate control unit (full-auto A/C only)
11	Screw
12	Ventilator grille
13	Center panel

3. Install in the reverse order of removal.

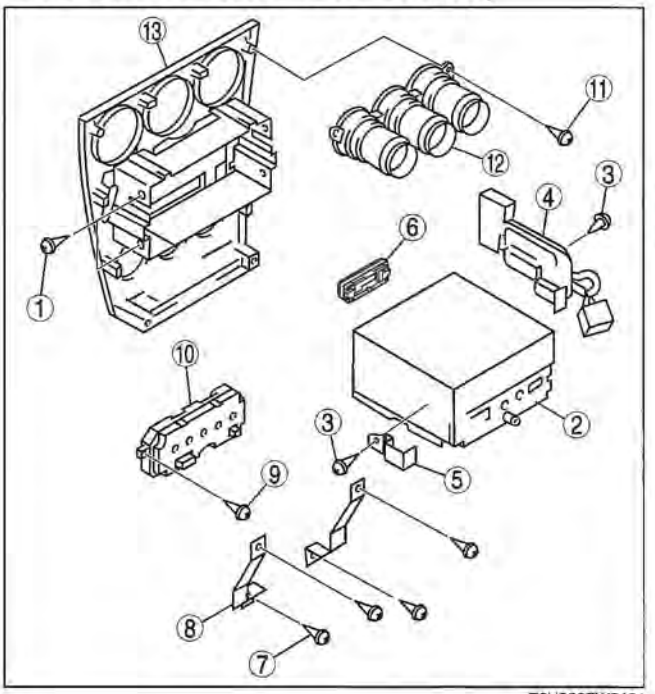

E6U920ZW5101

AUDIO UNIT DISASSEMBLY/ASSEMBLY

1. Disassemble in the order indicated in the table.

1	Screw
2	Lower module
3	Base unit
4	Screw
5	Bracket
6	Screw
7	Circuit boad (manual A/C only)

2. Assemble in the reverse order of disassembly.

E6U092066900W05

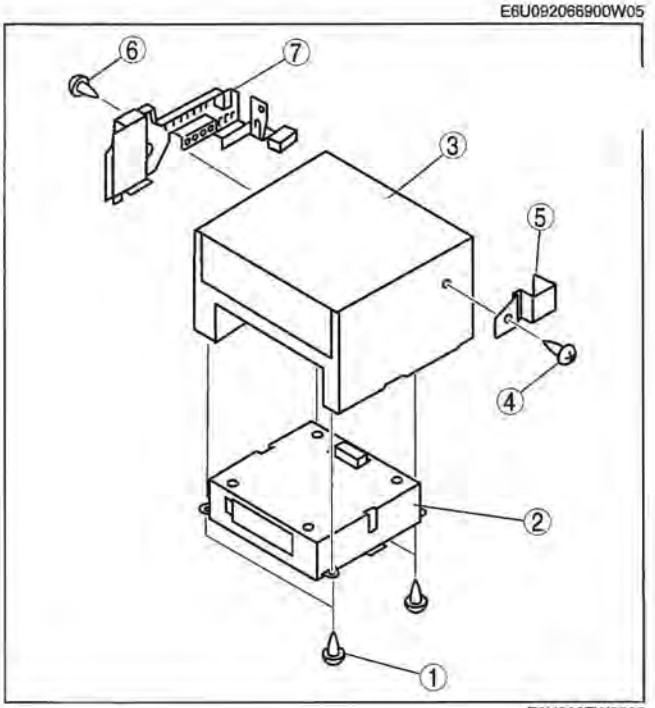

E6U920ZW5005

CAR-NAVIGATION UNIT REMOVAL/INSTALLATION

1. Disconnect the negative battery cable.
2. Remove in the order indicated in the table.

1	Bolt
2	Connector
3	Car-navigation unit

3. Install in the reverse order of removal.

E6U092066902W01

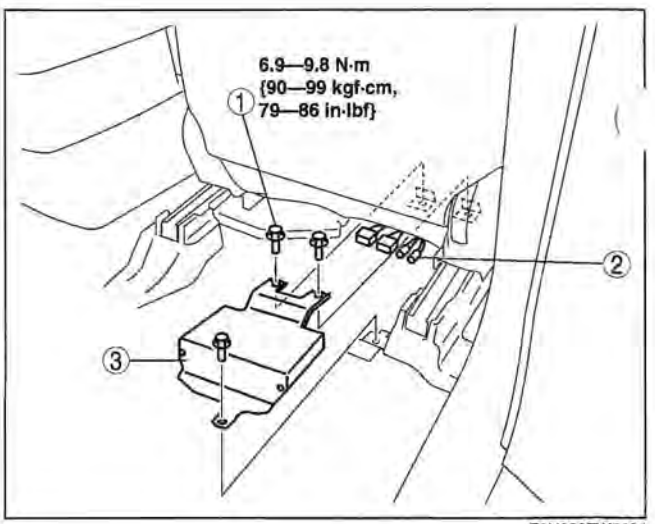

E6U920ZW5004

LCD UNIT REMOVAL/INSTALLATION

1. Disconnect the negative battery cable.
2. Remove the center panel module. (See 09–20–4 CENTER PANEL UNIT REMOVAL/INSTALLATION.)
3. Remove in the order indicated in the table.

1	Cover
2	Bolt
3	Screw
4	LCD unit (See 09–20–7 LCD Unit Removal Note)
5	Connector

4. Install in the reverse order of removal.

E6U092066902W02

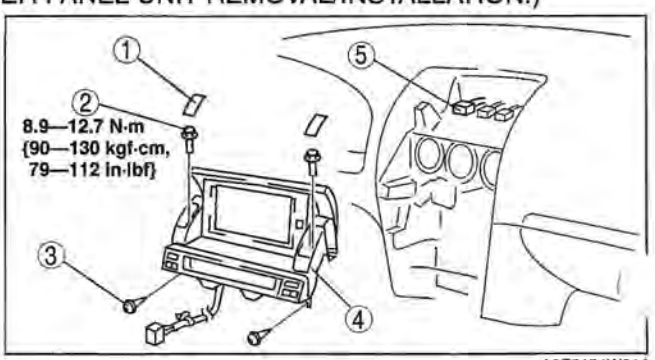

A6E8124W014

LCD Unit Removal Note

1. Pull up the front part of the LCD unit.

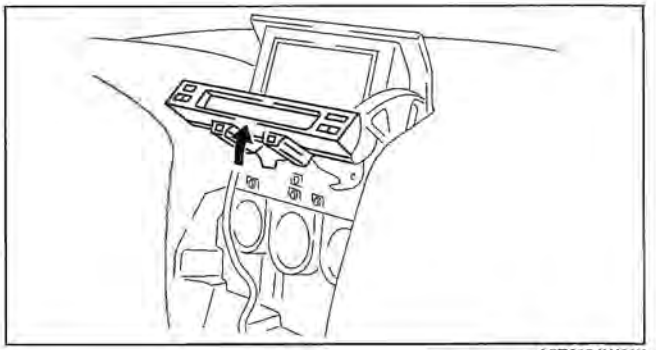

A6E8124W017

2. While pressing down the unit behind the LCD unit, pull the LCD unit out from the dashboard.

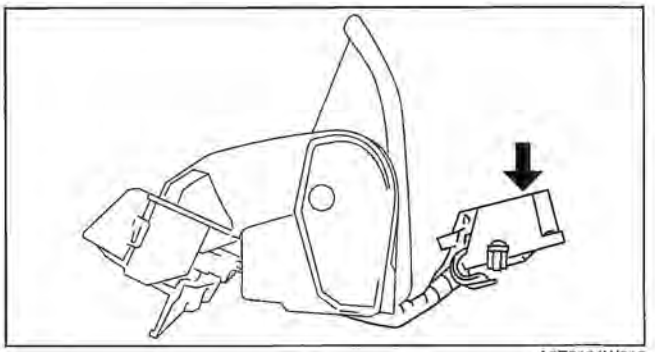

A6E8124W018

AUDIO CONTROL SWITCH REMOVAL/INSTALLATION

E6U092000148W01

Note

- The audio control switch and the cruise control switch use a common connector.

Disconnect the negative battery cable.

2. Remove the driver-side air bag module. (See 08–10–6 DRIVER-SIDE AIR BAG MODULE REMOVAL/INSTALLATION.)
3. Remove the steering wheel.
4. Remove in the order indicated in the table.

1	Screw
2	Cover
3	Screw
4	Audio control switch/cruise control switch
5	Bolt
6	Bracket

5. Install in the reverse order of removal.

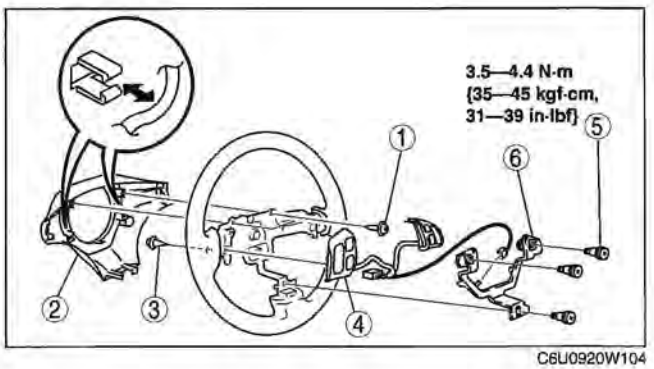

C6U0920W104

AUDIO CONTROL SWITCH INSPECTION

E6U092000148W02

1. Disconnect the negative battery cable.
2. Remove the driver-side air bag module. (See 08–10–6 DRIVER-SIDE AIR BAG MODULE REMOVAL/INSTALLATION.)
3. Disconnect the audio control switch connector.
4. Measure the resistance and inspect for continuity between the cruise control switch terminals using an ohmmeter.
   - If not as specified, replace the cruise control switch.

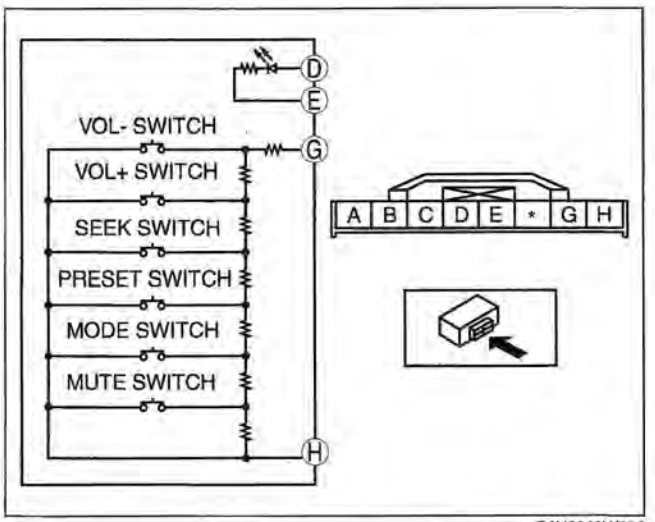

B6U0920W503

O-W-O: Resistance O-▶|-O: Diode

Switch position	Terminal			
	D	E	G	H
VOL- switch held at on	O-▶|-O		O-W-O	R_1
VOL+ switch held at on	O-▶|-O		O-W-O	R_2
SEEK+ switch held at on	O-▶|-O		O-W-O	R_3
PRESET switch held at on	O-▶|-O		O-W-O	R_4
MODE switch held at on	O-▶|-O		O-W-O	R_5
MUTE switch held at on	O-▶|-O		O-W-O	R_6
Neutral	O-▶|-O		O-W-O	R_7

R_1: 51—56 ohms, R_2: 140—153 ohms
R_3: 287—314 ohms, R_4: 535—588 ohms
R_5: 987—1086 ohms, R_6: 1.94—2.13 kilohms
R_7: 4.08—5.29 kilohms

A6E8124W028

AUDIO AMPLIFIER REMOVAL/INSTALLATION

E6U092066910W01

1. Disconnect the negative battery cable.
2. Remove the front seat (driver-side). (See 09–13–4 FRONT SEAT REMOVAL/INSTALLATION [L3 WITH TC].) (See 09–13–5 FRONT SEAT REMOVAL/INSTALLATION [EXCEPT L3 WITH TC].)
3. Remove in the order indicated in the table.

1	Bolt
2	Connector
3	Audio amplifier

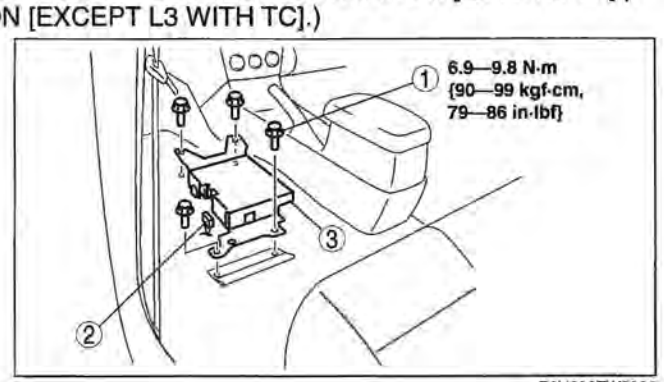

E6U920ZW5003

4. Install in the reverse order of removal.

FRONT DOOR SPEAKER REMOVAL/INSTALLATION

E6U092066961W01

1. Disconnect the negative battery cable.
2. Remove the front door trim.
   Remove in the order indicated in the table.

1	Screw
2	Connector
3	Front door speaker (See 09–20–9 Front Door Speaker Installation Note)

4. Install in the reverse order of removal.

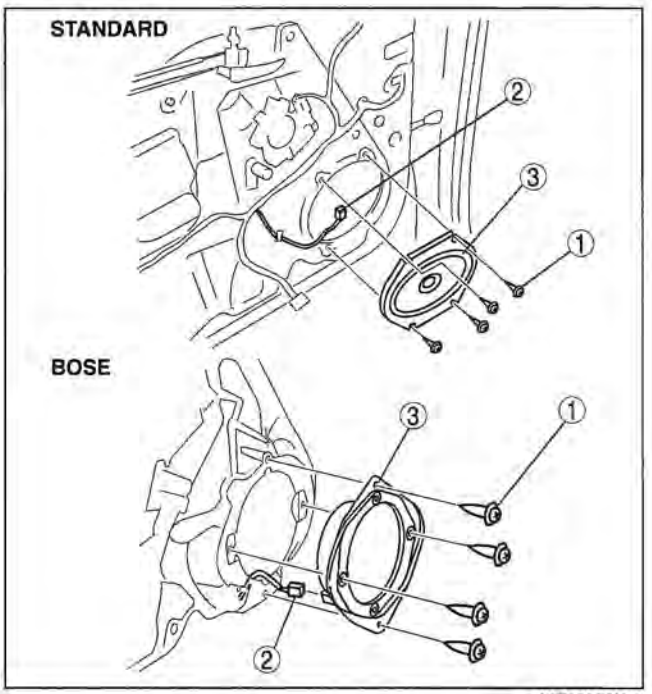

A6E8124W001

Front Door Speaker Installation Note

1. Attach the speaker with the wiring harness placed in the groove of the door unit panel.

Caution

- **If the speaker is attached with the harness placed outside of the groove, the wiring harness might be broken.**

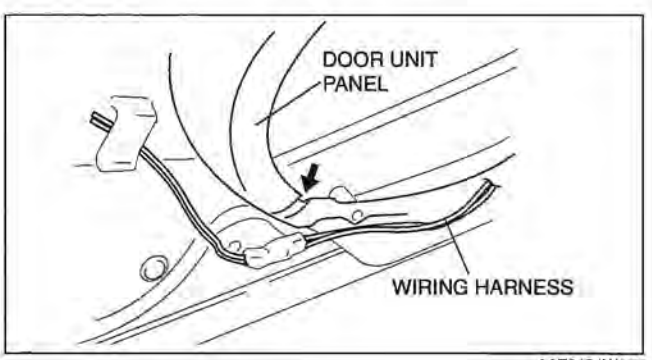

A6E8124W002

FRONT DOOR SPEAKER INSPECTION

E6U092066961W02

1. Inspect for resistance between the front door speaker terminals using an ohmmeter.
   - If not as specified, replace the front door speaker.

○WW○ : Resistance

Test condition	Terminal	
	A	B
Under any condition	○	○ R

R: 4 ohms (standard)
1.8 ohms (BOSE)

B6U0920W602

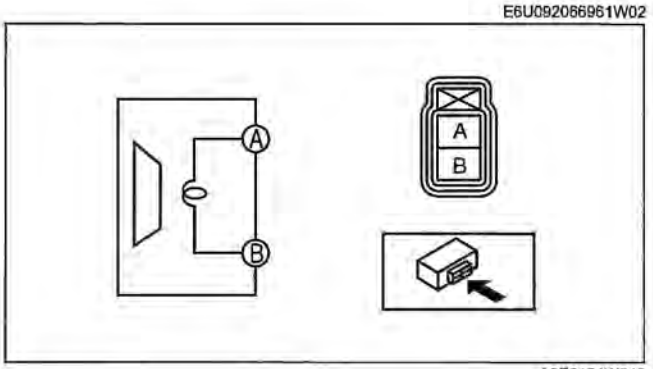

A6E8124W040

2. To verify that the front door speaker outputs sound, apply voltage to the front door speaker and release using a 1.5 V battery.
   - If it does not output sound, replace the front door speaker.

REAR DOOR SPEAKER REMOVAL/INSTALLATION

E6U092066961W03

1. Disconnect the negative battery cable.
2. Remove the rear door trim.
3. Remove in the order indicated in the table.

1	Screw
2	Connector
3	Rear door speaker (See 09–20–10 Rear Door Speaker Installation Note)

4. Install in the reverse order of removal.

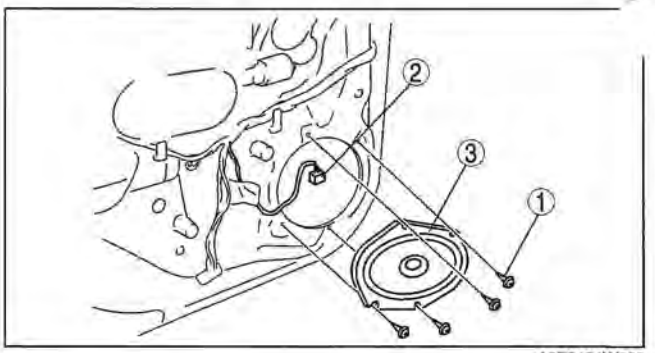

A6E8124W003

Rear Door Speaker Installation Note

1. Attach the speaker with the wiring harness placed in the groove of the door unit panel.

Caution

- **If the speaker is attached with the harness placed outside of the groove, the wiring harness might be broken.**

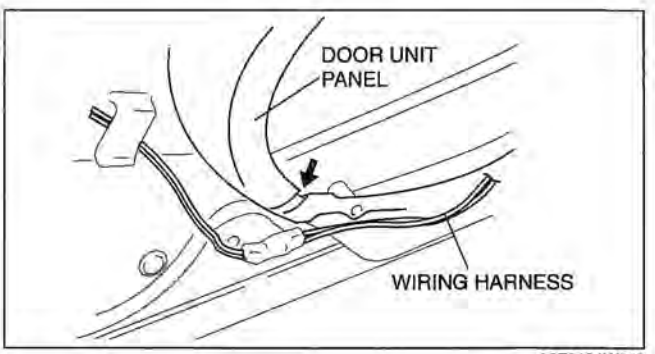

A6E8124W002

REAR DOOR SPEAKER INSPECTION

E6U092066961

1. Inspect for resistance between the rear door speaker terminals using an ohmmeter.
   - If not as specified, replace the rear door speaker.

: Resistance

Test condition	Terminal	
	A	B
Under any condition		R

R: 4 ohms (standard)
2 ohms (BOSE)

A6E8124W032

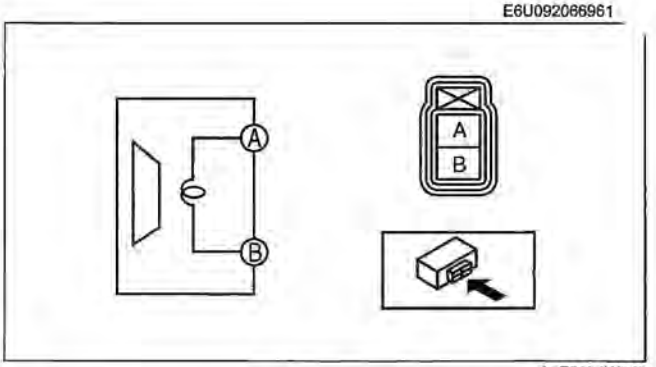

A6E8124W040

2. To verify that the rear door speaker outputs sound, apply voltage to the rear door speaker and release using a 1.5 V battery.
   - If it does not output sound, replace the rear door speaker.

TWEETER REMOVAL/INSTALLATION

E6U092068966W01

1. Disconnect the negative battery cable.
2. Remove in the order indicated in the table.

1	Inner garnish
2	Connector
3	Screw
4	Cover
5	Tweeter

3. Install in the reverse order of removal.

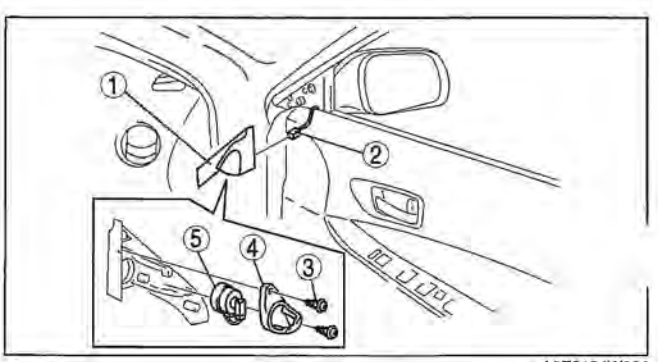

A6E8124W004

TWEETER INSPECTION

E6U092068966W02

1. To verify the front door speaker outputs sound.
   - If it does output sound, then go to next step.
   - If it does not output sound, inspect the front door speaker and related wiring harnesses. (See 09–20–9 FRONT DOOR SPEAKER INSPECTION.)
2. Remove the center panel module. (See 09–20–4 CENTER PANEL UNIT REMOVAL/INSTALLATION.)
3. Inspect for continuity between the tweeter connector terminals and audio unit connector terminals using an ohmmeter.
   - If there is no continuity, replace the related wiring harnesses.
   - If there is continuity, replace the tweeter.

O—O: Continuity

Test condition	Terminal			
	Audio unit connector		Tweeter connector	
	1F	1D	A	B
Under any condition	O		O	
		O		O

E6U920ZW5102

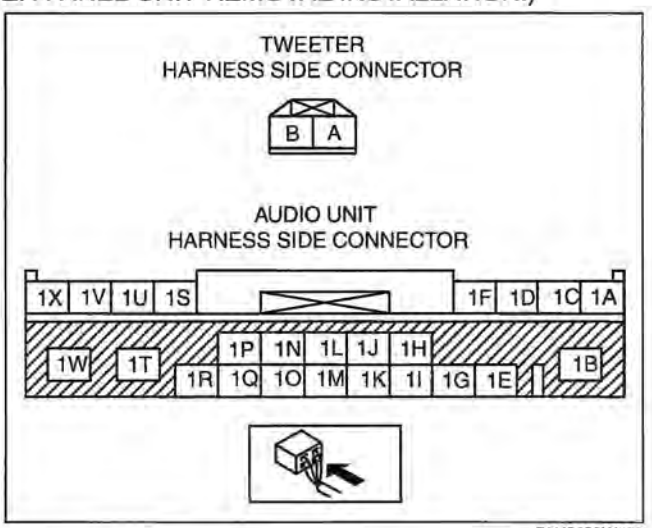

B6U0920W603

WOOFER REMOVAL/INSTALLATION [SPORT SEDAN]

E6U092066967W01

1. Disconnect the negative battery cable.
2. Remove the rear package trim.
3. Remove in the order indicated in the table.

1	Screw
2	Connector
3	Woofer

4. Install in the reverse order of removal.

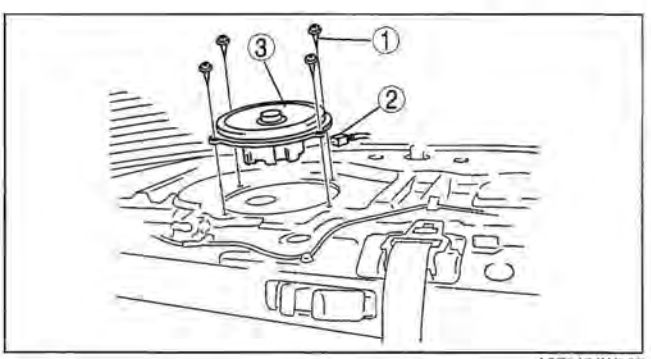

A6E8124W005

WOOFER REMOVAL/INSTALLATION [5-DOOR, SPORT WAGON]

E6U092066967W02

1. Disconnect the negative battery cable.
2. Remove in the order indicated in the table.

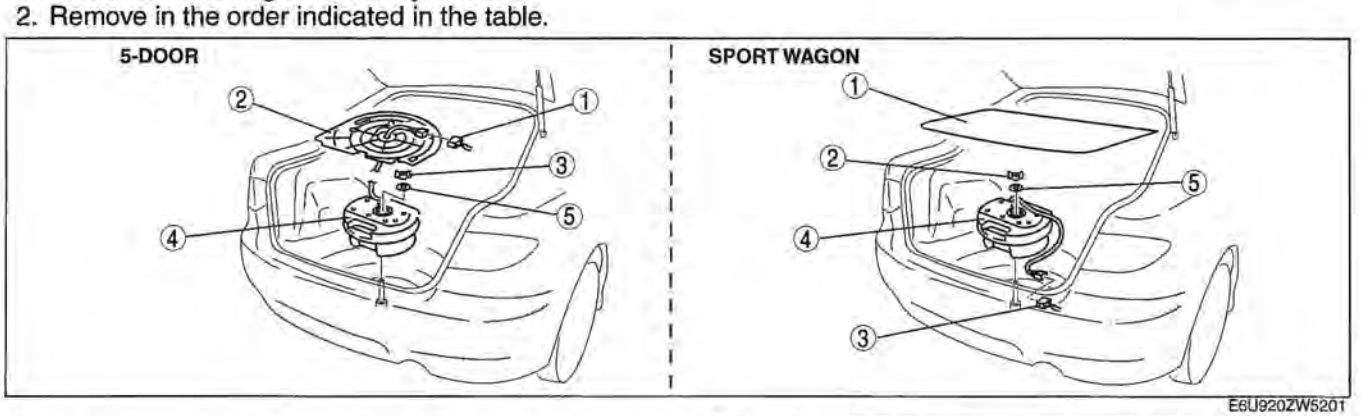

E6U920ZW5201

No.	5-door	Sport Wagon
1	Connector	Rear package trim
2	Temporary spare tire cover	Wing bolt
3	Wing bolt	Connector

No.	5-door	Sport Wagon
4	Woofer	Woofer
5	Washer	Washer

3. Install in the reverse order of removal.

WOOFER INSPECTION [SPORT SEDAN]

1. Inspect for continuity between the audio amplifier connector terminals and woofer connector terminals using an ohmmeter.
   - If not as specified, replace the related wiring harnesses.

O—O: Continuity

Test condition	Terminal			
	Audio amplifier connector		Woofer connector	
	O	P	G	H
Under any condition	O		O	
		O		O

B6U0920W003

E6U092066967W0[illegible]

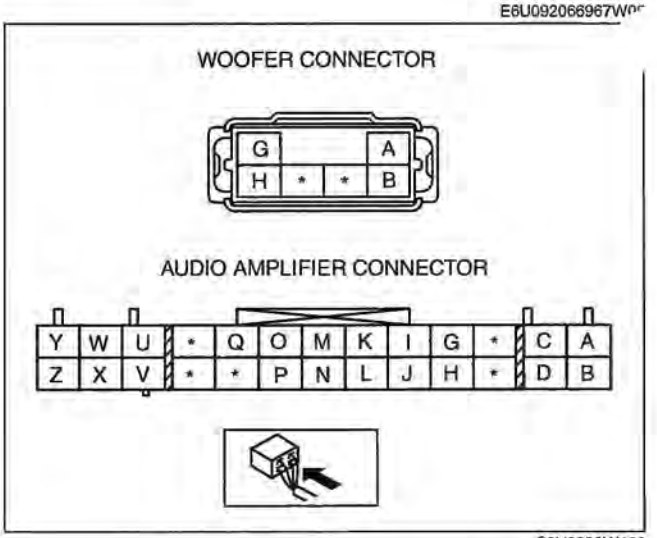

C6U0920W106

2. Verify that there is battery positive voltage at the woofer connector terminal A using a voltmeter.
   - If not as specified, replace the related wiring harness.
3. Inspect continuity between the woofer connector terminal B and body ground using an ohmmeter.
   - If not as specified, replace the related wiring harness.
   - If as specified, replace the woofer.

WOOFER INSPECTION [5-DOOR, SPORT WAGON]

1. Inspect for continuity between the audio amplifier connector terminals and woofer connector terminals using an ohmmeter.
   - If not as specified, replace the related wiring harnesses.

O—O: Continuity

Test condition	Terminal			
	Audio amplifier connector		Woofer connector	
	O	P	E	F
Under any condition	O		O	
		O		O

C6U0920WM02

E6U092066967W04

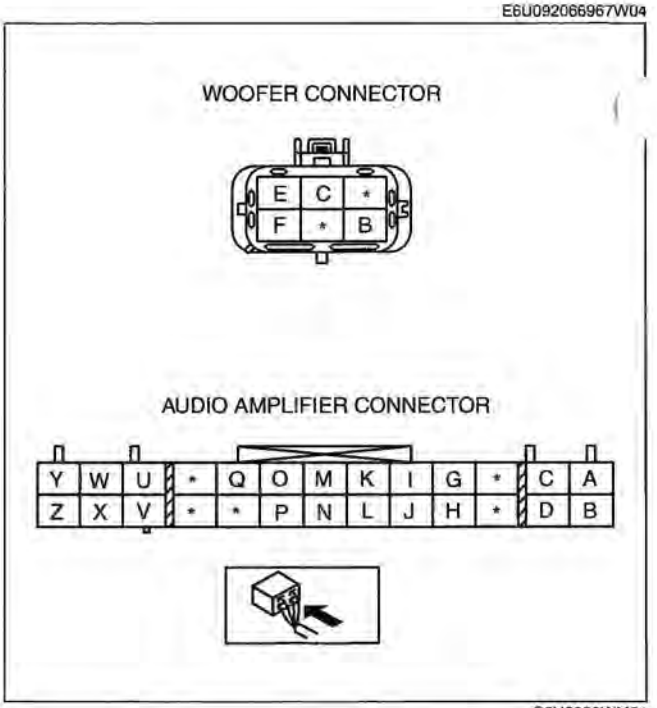

C6U0920WM01

2. Verify that there is battery positive voltage at the woofer connector terminal C using a voltmeter.
   - If not as specified, replace the related wiring harness.
3. Inspect continuity between the woofer connector terminal B and body ground using an ohmmeter.
   - If not as specified, replace the related wiring harness.
   - If as specified, replace the woofer.

CONDENSER REMOVAL/INSTALLATION [SPORT SEDAN]

E6U092066869W01

1. Disconnect the negative battery cable.
2. Remove the rear package trim.
   Remove in the order indicated in the table.

1	Bolt
2	Connector
3	Condenser

4. Install in the reverse order of removal.

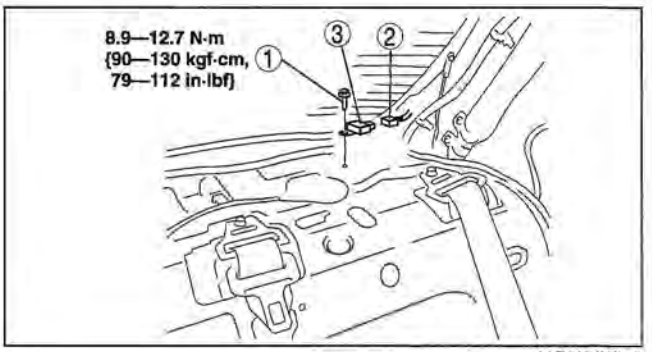

A6E8124W007

CONDENSER REMOVAL/INSTALLATION [5-DOOR]

E6U092066869W02

1. Disconnect the negative battery cable.
2. Remove the liftgate lower trim.
3. Remove in the order indicated in the table.

1	Bolt
2	Connector
3	Condenser

4. Install in the reverse order of removal.

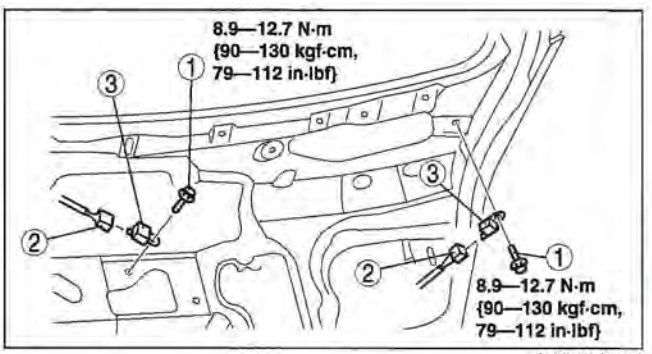

A6E8124W021

CONDENSER REMOVAL/INSTALLATION [SPORT WAGON]

E6U092066869W03

1. Disconnect the negative battery cable.
2. Remove the liftgate lower trim.
3. Remove in the order indicated in the table.

1	Bolt
2	Connector
3	Condenser

4. Install in the reverse order of removal.

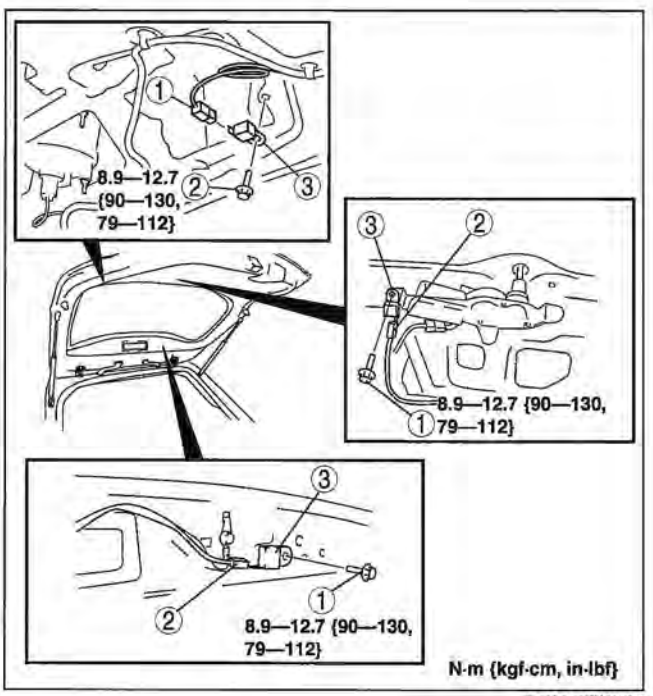

E6U920ZW5002

CENTER ROOF ANTENNA REMOVAL/INSTALLATION

E6U092066939W01

1. Disconnect the negative battery cable.
2. Remove the headliner. (See 09–17–24 HEADLINER REMOVAL/INSTALLATION.)
3. Remove in the order indicated in the table.

1	Antenna rod
2	Antenna feeder
3	Nut
4	Center roof antenna

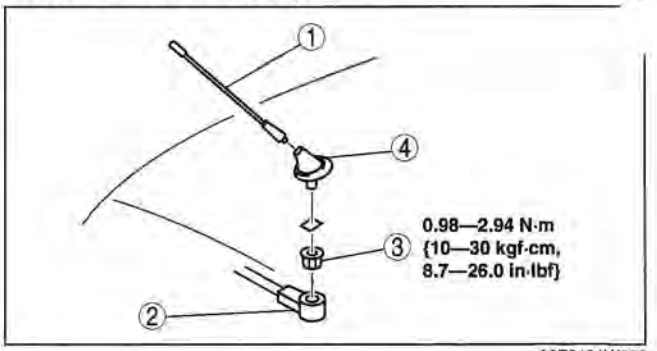

A6E8124W023

4. Install in the reverse order of removal.
5. After installation, verify that the rubber of the center roof antenna is installed to the roof panel with no space between them.

CENTER ROOF ANTENNA INSPECTION

E6U092066939W02

1. Verify that there is no continuity between the center roof antenna terminals A and C using an ohmmeter.
2. Inspect for continuity between the center roof antenna terminals using an ohmmeter.
   - If not as specified, replace the center roof antenna.

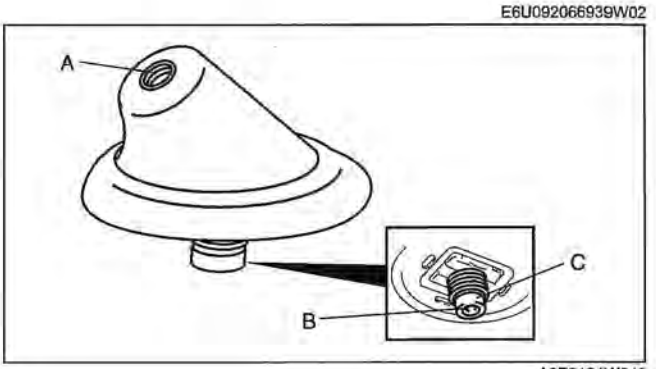

A6E8124W048

O—O: Continuity

Test condition	Terminal	
	A	B
Under any condition	O	O

A6E8124W031

MICROPHONE REMOVAL/INSTALLATION

E6U092000175W01

1. Disconnect the negative battery cable.
2. Remove in the order indicated in the table.

1	Microphone
2	Connector
3	Bracket

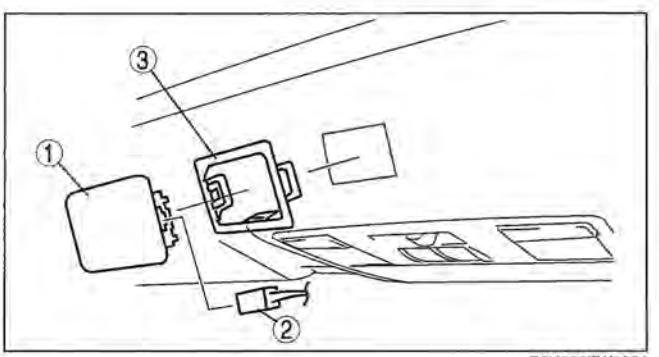

E6U920ZW5001

3. Install in the reverse order of removal.

GPS ANTENNA REMOVAL/INSTALLATION

E6U092066936W01

1. Disconnect the negative battery cable.
2. Remove the instrument cluster.
3. Remove in the order indicated in the table.

1	Connector
2	GPS antenna

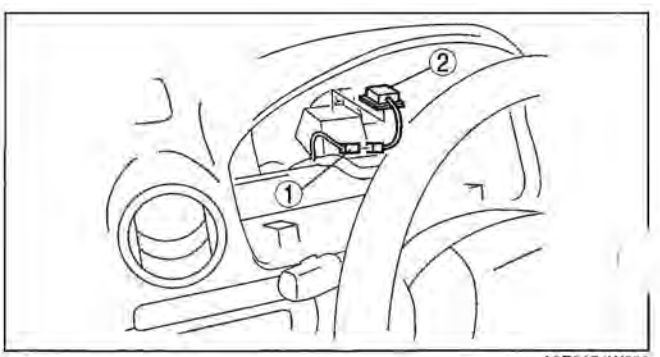

A6E8124W022

4. Install in the reverse order of removal.

ANTENNA FEEDER LOCATION [SPORT SEDAN]

E6U092066940W01

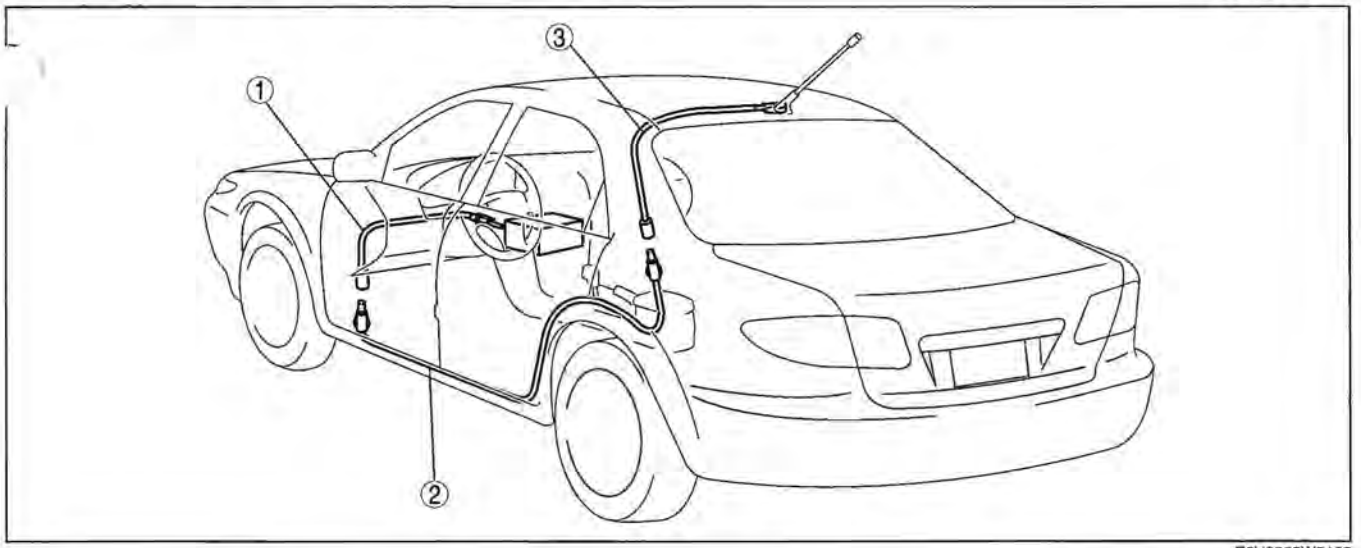

E6U0920W5102

1	Front antenna feeder
2	Rear antenna feeder No.1
3	Rear antenna feeder No.2

ANTENNA FEEDER LOCATION [5-DOOR]

E6U092066940W02

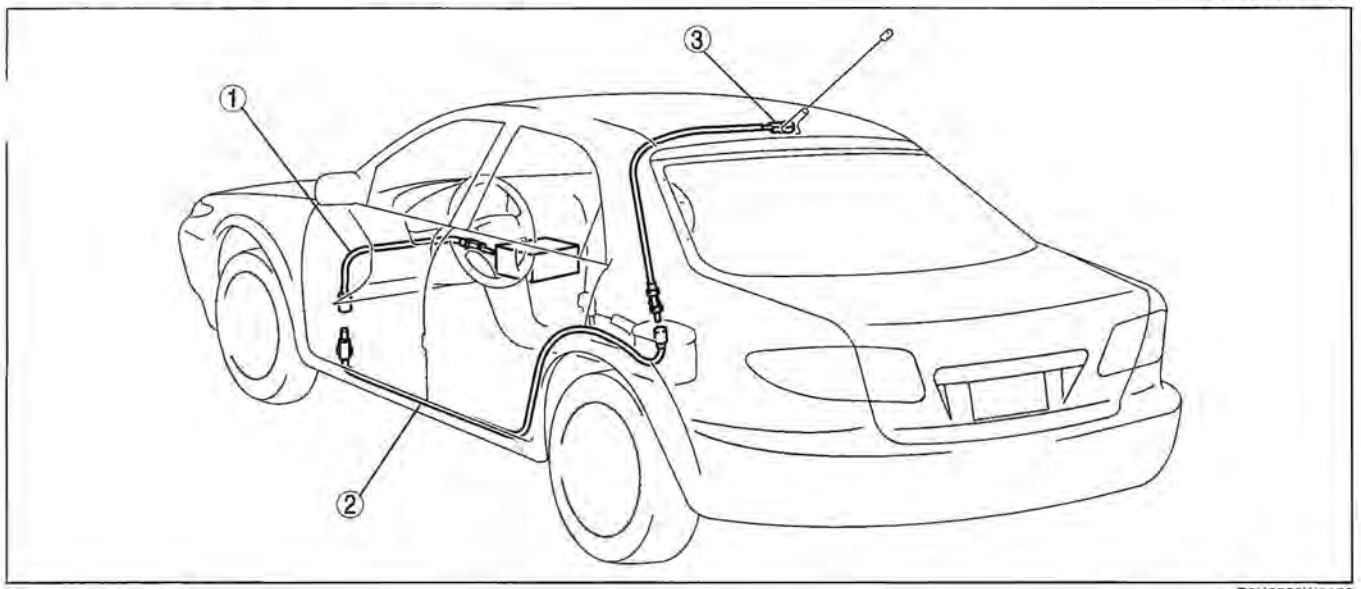

E6U0920W5103

1	Front antenna feeder
2	Rear antenna feeder No.1
3	Rear antenna feeder No.2

ANTENNA FEEDER LOCATION [SPORT WAGON]

E6U09206694OW03

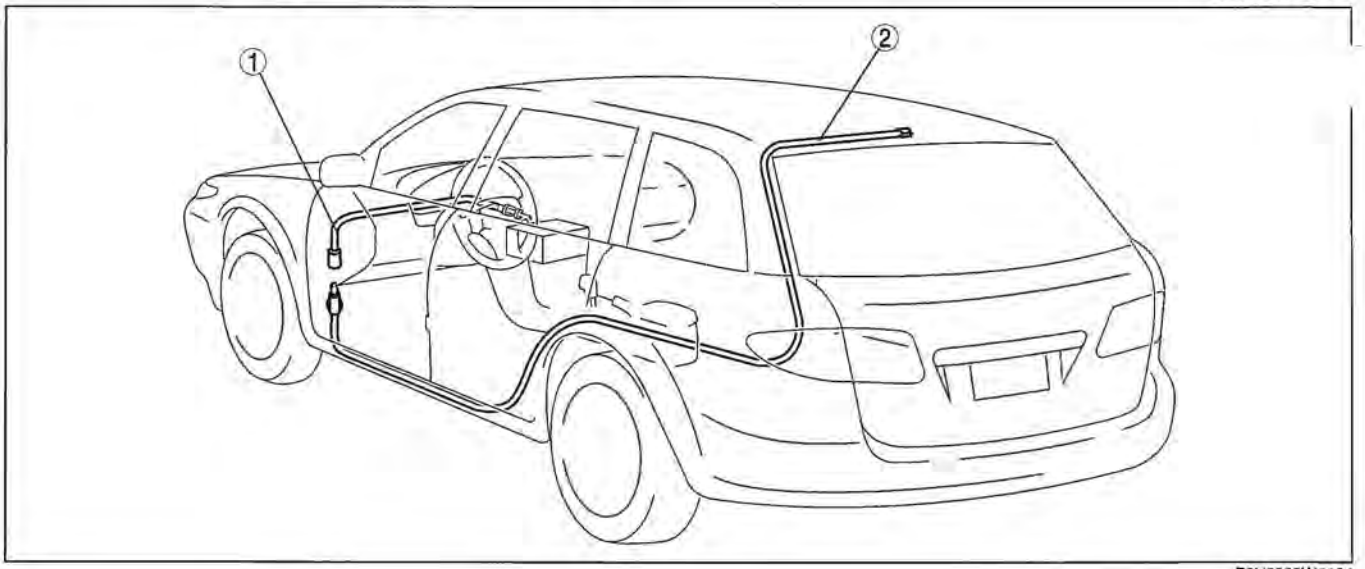

E6U0920W5104

1	Front antenna feeder
2	Rear antenna feeder

FRONT ANTENNA FEEDER INSPECTION

1. Verify that there is no continuity between the front antenna feeder terminals A and B using an ohmmeter.
2. Inspect for continuity between the front antenna feeder terminals using an ohmmeter.
   - If not as specified, replace the instrument panel harness.

O—O : Continuity

Step	Terminal			
	A	B	C	D
1	O		O	
2		O		O

A6E8124W047

E6U092066940W04

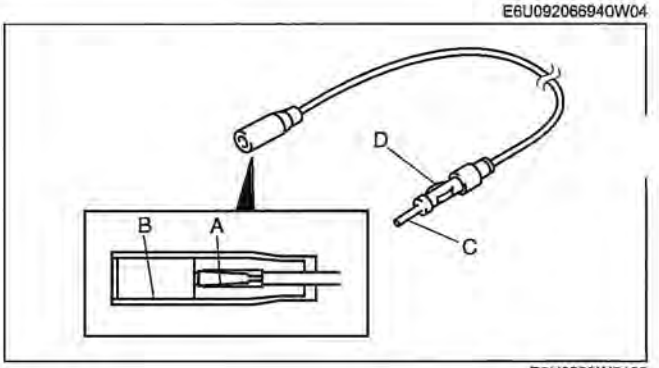

E6U0920W5105

REAR ANTENNA FEEDER INSPECTION [SPORT SEDAN]

E6U092066940W05

1. Verify that there is no continuity between antenna feeder terminals A and B using an ohmmeter. Inspect for continuity between the antenna feeder terminals using an ohmmeter.
   - If not as specified, replace the rear harness.

O—O : Continuity

Step	Terminal			
	A	B	C	D
1	O		O	
2		O		O

A6E8124W047

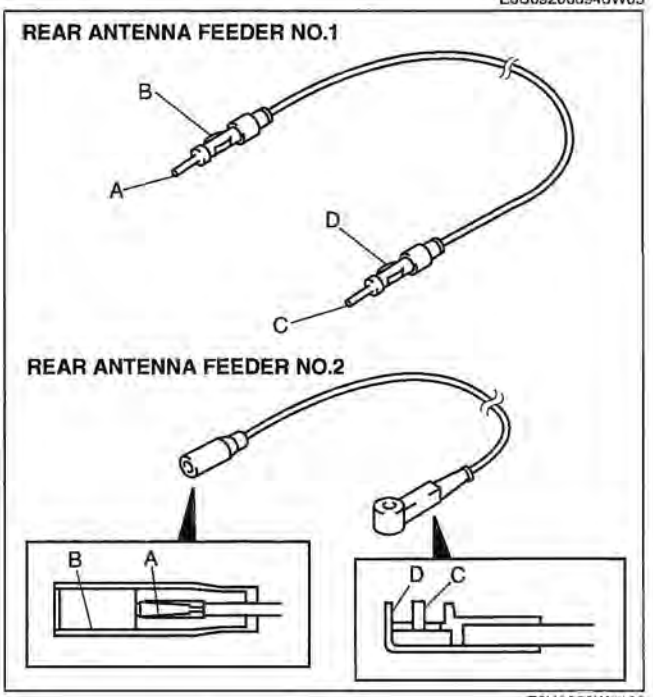

E6U0920W5106

REAR ANTENNA FEEDER INSPECTION [5-DOOR]

E6U092066940W06

1. Verify that there is no continuity between antenna feeder terminals A and B using an ohmmeter.
2. Inspect for continuity between the antenna feeder terminals using an ohmmeter.
   - If not as specified, replace the rear harness.

O—O : Continuity

Step	Terminal			
	A	B	C	D
1	O		O	
2		O		O

A6E8124W047

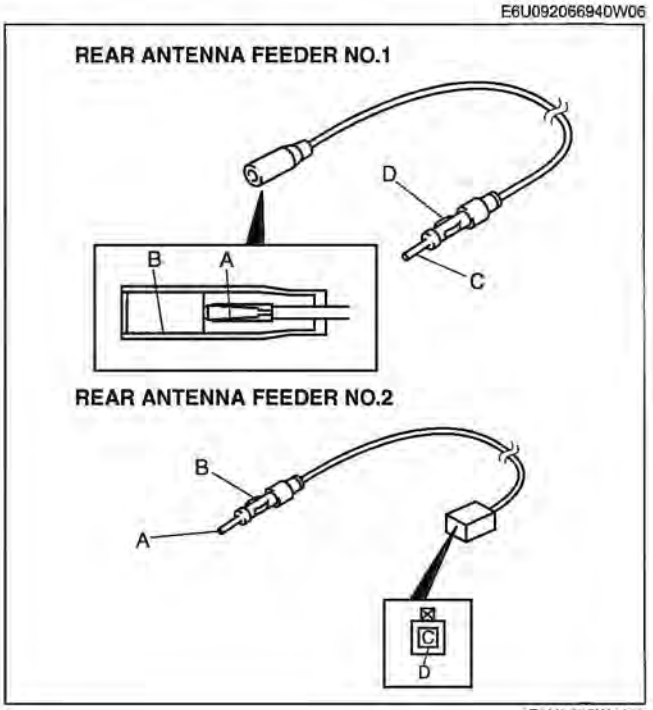

E6U0920W5107

REAR ANTENNA FEEDER INSPECTION [SPORT WAGON]

E6U092066940W07

1. Verify that there is no continuity between antenna feeder terminals A and B using an ohmmeter.
2. Inspect for continuity between the antenna feeder terminals using an ohmmeter.
   - If not as specified, replace the rear harness.

O—O : Continuity

Step	Terminal			
	A	B	C	D
1	O		O	
2		O		O

A6E81241147

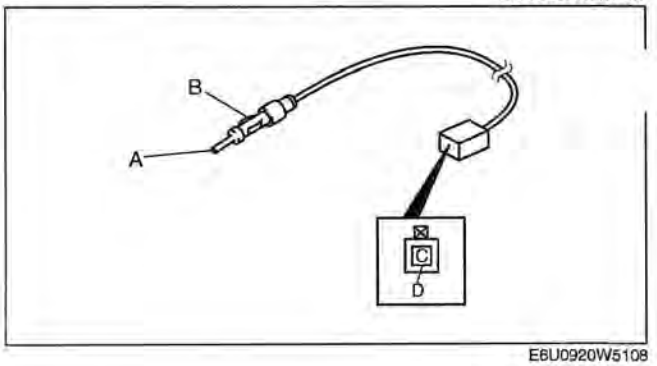

E6U0920W5108

GPS ANTENNA FEEDER INSPECTION

E6U092066940W08

1. Verify that there is no continuity between the GPS antenna feeder terminal A and B.
2. Verify that the continuity is as indicated in the table.
   - If not as indicated in the table, replace the GPS antenna feeder.

O—O : Continuity

Step	Terminal			
	A	B	C	D
1	O		O	
2		O		O

CHU0920W019

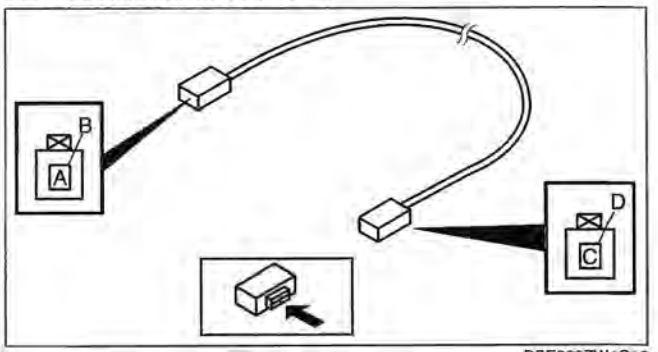

DPE920ZW1015

ACCESSORY SOCKET REMOVAL/INSTALLATION

E6U092066290W01

Front

1. Disconnect the negative battery cable.
2. Remove the panel No.1. (See 09–17–8 CONSOLE REMOVAL/INSTALLATION.)
3. Remove the panel No.2. (See 09–17–8 CONSOLE REMOVAL/INSTALLATION.)
4. Remove in the order indicated in the table.

1	Connector
2	Socket (See 09–20–19 Socket removal note.)
3	Cap (See 09–20–19 Cap removal note.)

5. Install in the reverse order of removal.

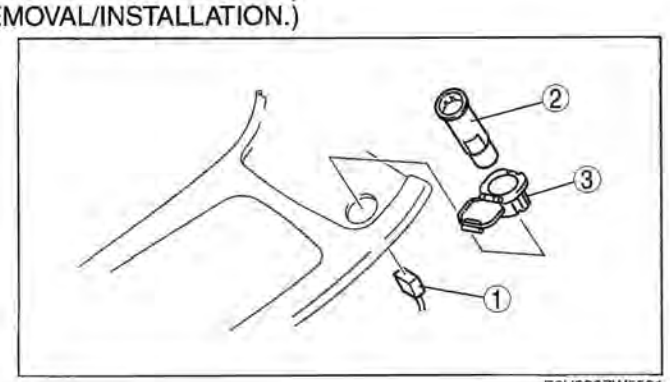

E6U920ZW5501

Rear

1. Disconnect the negative battery cable.
2. Remove the console. (See 09–17–8 CONSOLE REMOVAL/INSTALLATION.)

3. Remove in the order indicated in the table.

1	Connector
2	Socket (See 09–20–19 Socket removal note.)
3	Cap (See 09–20–19 Cap removal note.)

4. Install in the reverse order of removal.

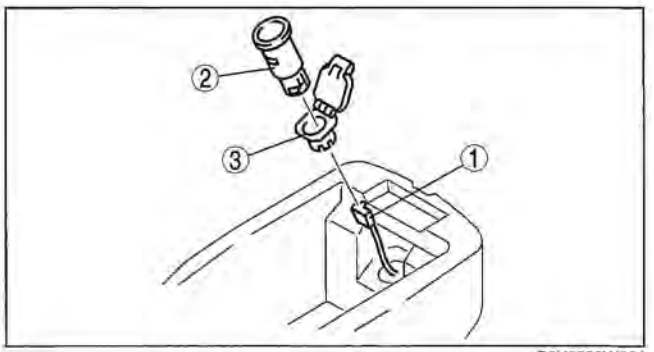

B6U0920W004

Socket removal note

1. Remove the socket by pushing on the protrusion with a tape-wrapped flathead screwdriver inserted through the socket hole, and pulling the socket toward you.

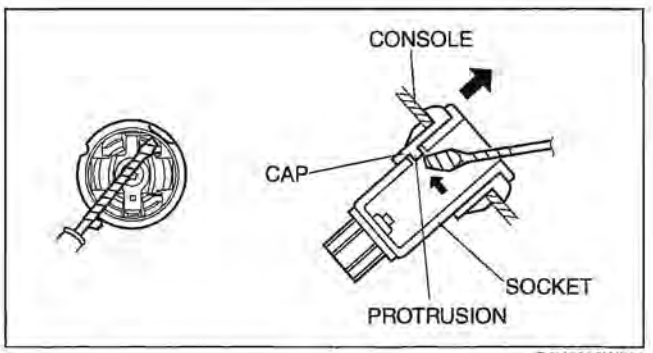

B6U0920W006

Cap removal note

1. Pull the cap forward while squeezing the tabs.

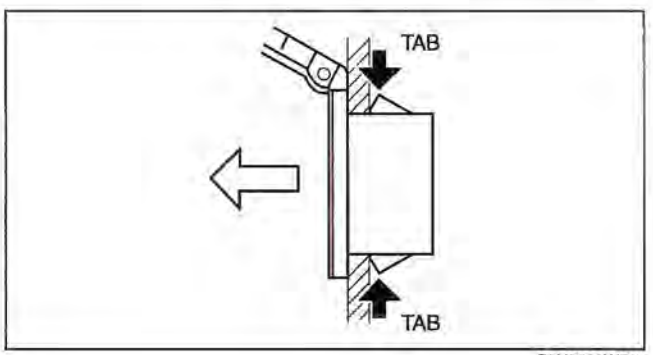

B6U0920W007

ACCESSORY SOCKET INSPECTION

E6U092066290W02

1. Remove the accessory socket. (See 09–20–18 ACCESSORY SOCKET REMOVAL/INSTALLATION.)
2. Inspect for continuity between the accessory socket terminals B and C using an ohmmeter as shown in the figure.
   - If not as specified, replace the accessory socket.

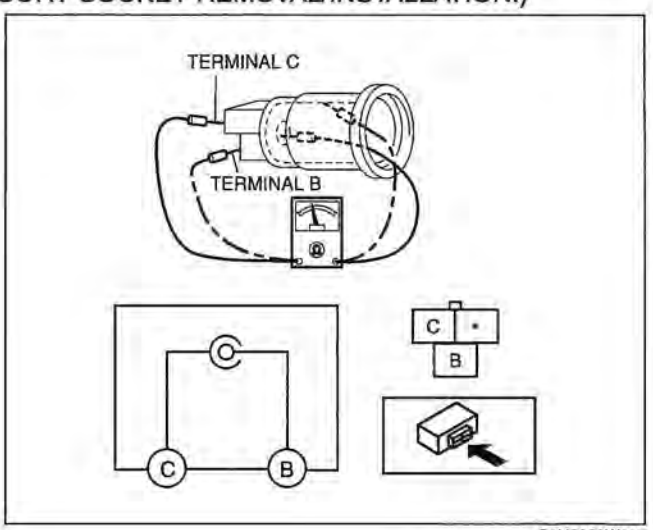

B6U0920W005

09–21 POWER SYSTEMS

POWER SYSTEM
LOCATION INDEX..... 09–21–1
FUSE SERVICE CAUTION 09–21–2
MAIN FUSE
REMOVAL/INSTALLATION..... 09–21–2
Bolt Removal Note..... 09–21–2
FUSE BLOCK
REMOVAL/INSTALLATION..... 09–21–3
IGNITION SWITCH
REMOVAL/INSTALLATION..... 09–21–3
IGNITION SWITCH INSPECTION..... 09–21–3
KEY REMINDER SWITCH
REMOVAL/INSTALLATION 09–21–4
KEY REMINDER SWITCH
INSPECTION 09–21–4
STEERING LOCK UNIT
INSPECTION 09–21–5
Terminal Voltage Table
(Reference).....09–21–5
RELAY LOCATION.....09–21–6
RELAY INSPECTION 09–21–7
Relay Type.....09–21–7
Four-terminal.....09–21–7

POWER SYSTEM LOCATION INDEX

E6U092100200W01

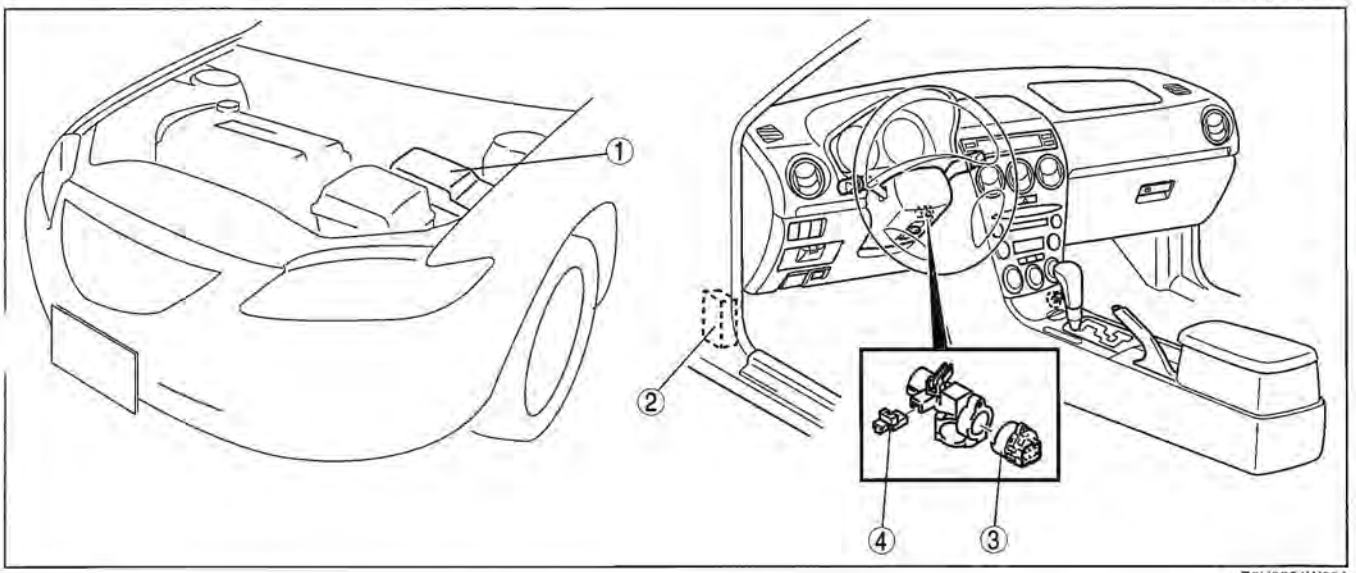

B6U0921W001

1	Main fuse block (See 09–21–2 MAIN FUSE REMOVAL/ INSTALLATION.) (See09–21–6 RELAY LOCATION.) (See09–21–7 RELAY INSPECTION.)
2	Fuse block (See 09–21–3 FUSE BLOCK REMOVAL/ INSTALLATION.) (See09–21–6 RELAY LOCATION.) (See09–21–7 RELAY INSPECTION.)

3	Ignition switch (See 09–21–3 IGNITION SWITCH REMOVAL/ INSTALLATION.) (See 09–21–3 IGNITION SWITCH INSPECTION.) (See 09–21–3 IGNITION SWITCH INSPECTION.)
4	Key reminder switch (See 09–21–4 KEY REMINDER SWITCH REMOVAL/INSTALLATION.) (See 09–21–4 KEY REMINDER SWITCH INSPECTION.)

FUSE SERVICE CAUTION

E6U092166000W01

Caution

- **Determine and correct the cause of the burnt fuse before replacing it with the specified type. If th fuse is replaced before doing this, it may burn again.**

MAIN FUSE REMOVAL/INSTALLATION

E6U092166761W01

1. Disconnect the negative battery cable.
2. Remove the main fuse block cover.
3. Remove in the order indicated in the table.

1	Nut
2	Bolt (See 09–21–2 Bolt Removal Note.)
3	Main fuse

4. Install in the reverse order of removal.

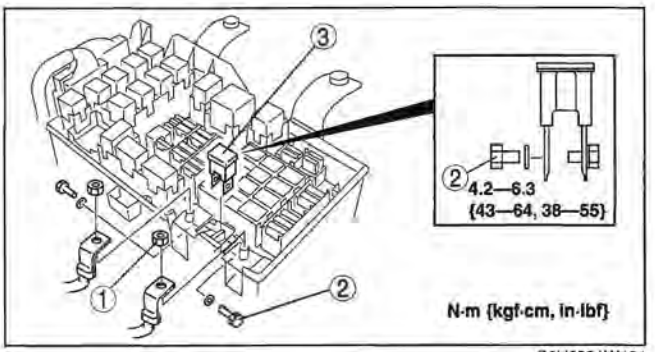

C6U0921W101

Bolt Removal Note

1. Press and remove the tabs on the main fuse block at the positions indicated by the arrows.

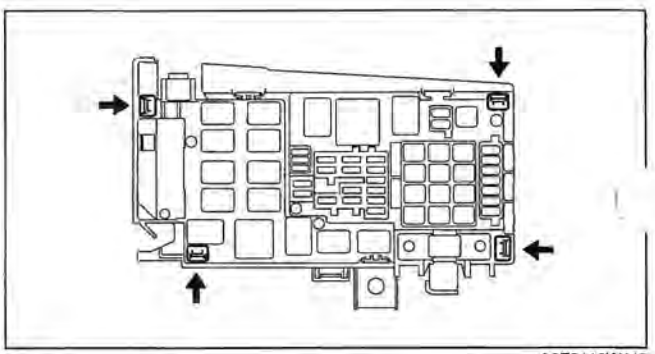

A6E8110W119

2. Lift up the main fuse block and remove the bolts.

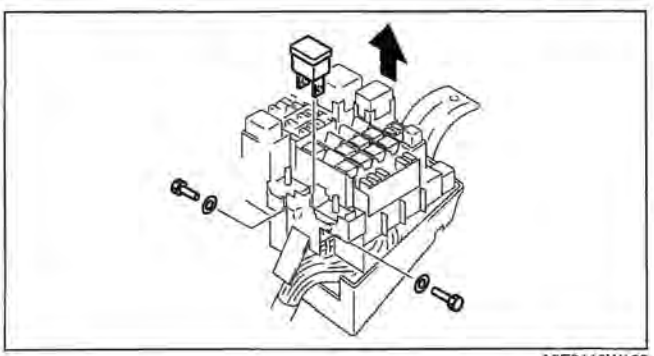

A6E8110W120

FUSE BLOCK REMOVAL/INSTALLATION

E6U092166730W01

1. Disconnect the negative battery cable.
2. Remove the left-side front side trim. (See 09–17–11 FRONT SIDE TRIM REMOVAL/INSTALLATION.)
   Remove in the order indicated in the table.

1	Connector
2	Bolt
3	Fuse block

4. Install in the reverse order of removal.

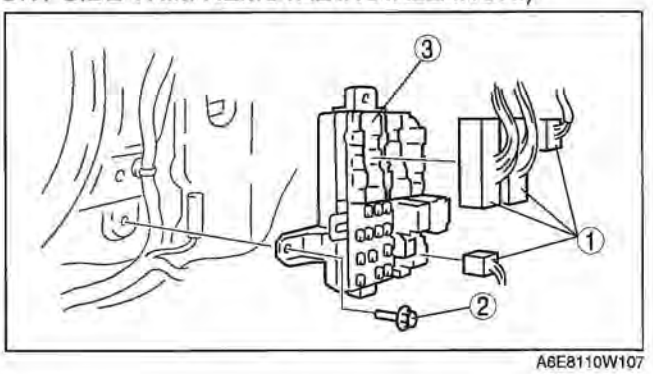

A6E8110W107

IGNITION SWITCH REMOVAL/INSTALLATION

E6U092166151W01

1. Disconnect the negative battery cable.
2. Remove the column cover. (See 09–17–6 COLUMN COVER REMOVAL/INSTALLATION.)
3. Remove in the order indicated in the table.

1	Connector
2	Screw
3	Ignition switch

4. Install in the reverse order of removal.

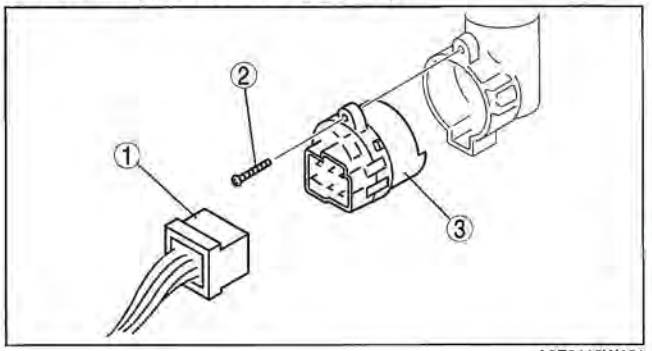

A6E8110W101

09–21

IGNITION SWITCH INSPECTION

E6U092166151W02

1. Disconnect the negative battery cable.
2. Remove the column cover. (See 09–17–6 COLUMN COVER REMOVAL/INSTALLATION.)
3. Disconnect the ignition switch connectors.
4. Inspect for continuity between the ignition switch terminals.
   - If not as specified, replace the ignition switch.

O—O: Continuity

Ignition key position	Terminal					
	E	F	D	C	B	A
LOCK						
ACC	O		O			
ON	O		O	O		
		O			O	
START	O			O		
		O				O

A6E8110W114

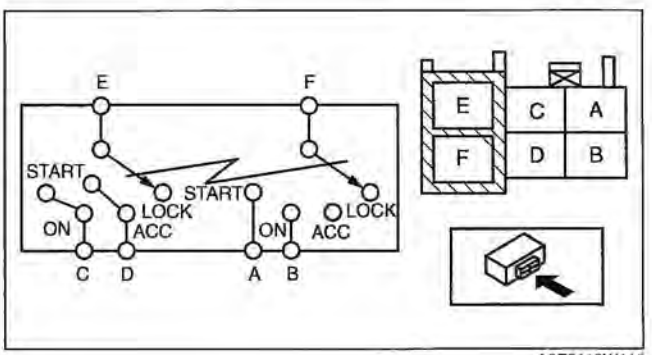

A6E8110W116

KEY REMINDER SWITCH REMOVAL/INSTALLATION

E6U092166152W01

1. Disconnect the negative battery cable.
2. Remove the column cover.
3. Disconnect the key reminder switch connector.
4. Remove the key reminder switch.
5. Install in the reverse order of removal.

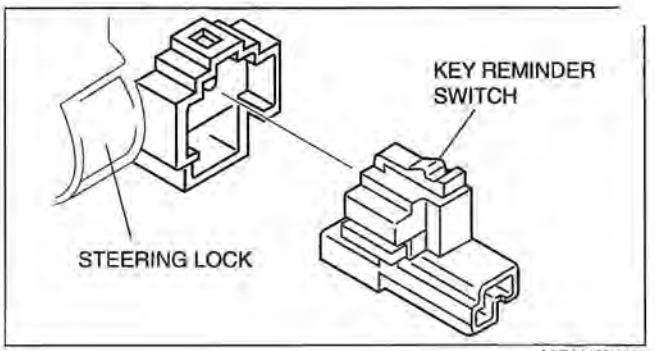

A6E8110W102

KEY REMINDER SWITCH INSPECTION

E6U092166152W02

1. Disconnect the negative battery cable.
2. Remove the column cover. (See 09–17–6 COLUMN COVER REMOVAL/INSTALLATION.)
3. Disconnect the key reminder switch connector.
4. Inspect for continuity between the key reminder switch terminals.
   - If not as specified, replace the key reminder switch.

O—O : Continuity

Key position	Terminal	
	A	B
Key inserted	O	O
Key removed		

A6E8110W115

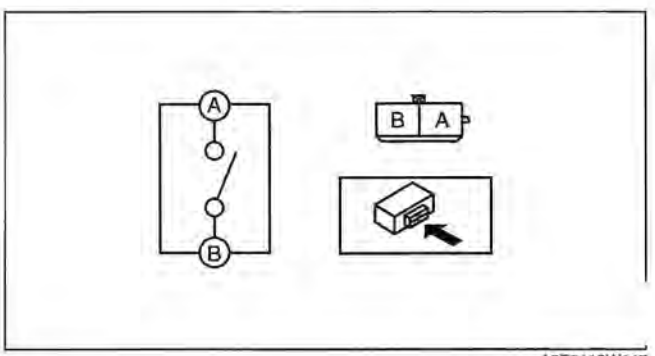

A6E8110W117

STEERING LOCK UNIT INSPECTION

E6U092166152W03

1. Measure the voltage or inspect for continuity according to the Terminal Voltage Table (Reference).
   - If the voltage is not as specified in the Terminal Voltage Table (Reference), inspect the parts under "Inspection item(s)" and related wiring harnesses.
   - If the system does not work properly even though the inspection items or related wiring harnesses do not have any malfunction, replace the steering look unit.

Terminal Voltage Table (Reference)

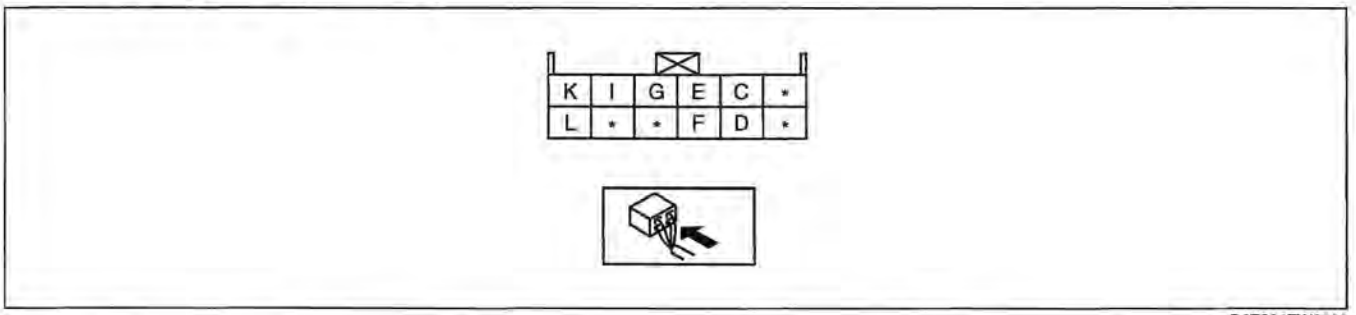

D6E921ZW2502

Terminal	Signal name	Connected to	Measured condition	Voltage (V)/ Continuity	Inspection item(s)
E	Push switch signal	Keyless control module	Start knob pressed	B+	• Keyless control module • Related wiring harnesses
			Start knob released	1.0 or less	
F	Power supply	Fuse	Under any condition	B+	• Fuse • Related wiring harnesses
G	Key reminder switch signal	Keyless control module	Key inserted	B+	• Keyless control module • Related wiring harnesses
			Key removed	1.0 or less	
I	Power supply	Fuse	Under any condition	B+	• Fuse • Related wiring harnesses
K	Serial communication	Keyless control module	Under any condition: Inspect for continuity to keyless control module.	Continuity detected	Related wiring harnesses
L	GND	Body ground	Under any condition: Inspect for continuity to GND.	Continuity detected	Related wiring harnesses

RELAY LOCATION

E6U092167730W01

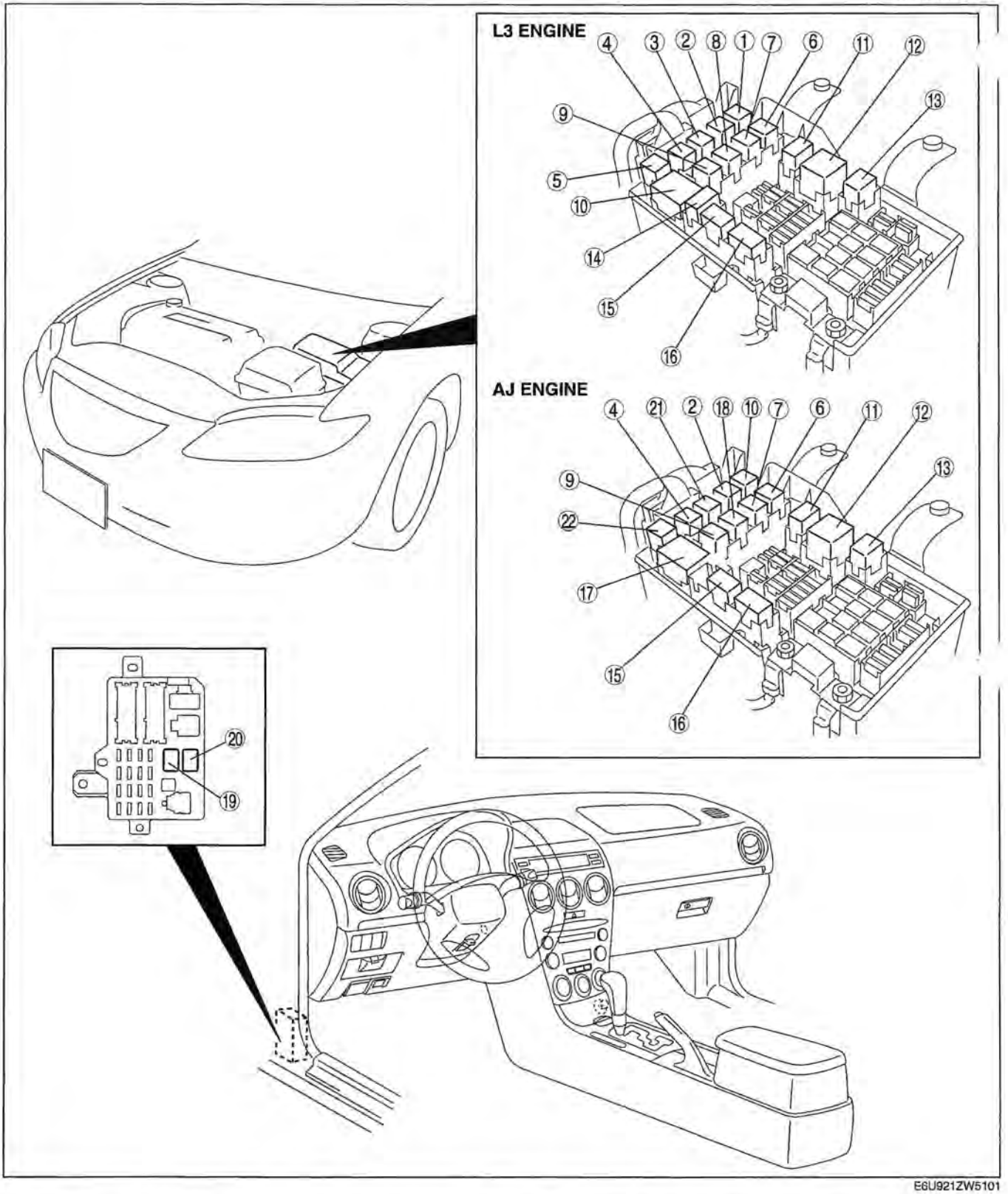

E6U921ZW5101

1	Cooling fan relay No.2
2	Horn relay
3	Cooling fan relay No.3
4	Starter relay
5	Cooling fan relay No.4
6	Woofer relay

7	Rear window defroster relay
8	AT main relay
9	A/C relay
10	Front fog light relay
11	Main relay
12	Headlight relay

13	TNS relay
14	Cooling fan relay No.1
15	ETC relay
16	Trunk lid opener relay
17	Cooling fan relay

18	IG1 relay
19	Fuel pump relay
20	Blower relay
21	Back-up light relay
22	Starter relay No.2

RELAY INSPECTION

E6U092167730W02

Relay Type

Terminal type		Part name
Four-terminal	Type A	• Main relay • Fuel pump relay • Starter relay • Starter relay No.2 • TNS relay • IG1 relay • Front fog light relay (AJ engine) • Horn relay • Trunk lid opener relay • Rear window defroster relay • Woofer relay • AT main relay • ETC relay • A/C relay • Blower relay • Cooling fan relay No.1 • Cooling fan relay No.2 • Cooling fan relay No.3 • Cooling fan relay No.4 • Back-up light relay
	Type B	• Headlight relay • Front fog light relay (L3 engine) • Cooling fan relay

09-21

Four-terminal

Type A

1. Remove the relay.
2. Inspect for continuity between the relay terminals.
   - If not as specified, replace the relay.

○—○ : Continuity

Step	Terminal			
	A	E	C	D
1	○——	——○		
2	B+	GND	○——	——○

A6E8110W121

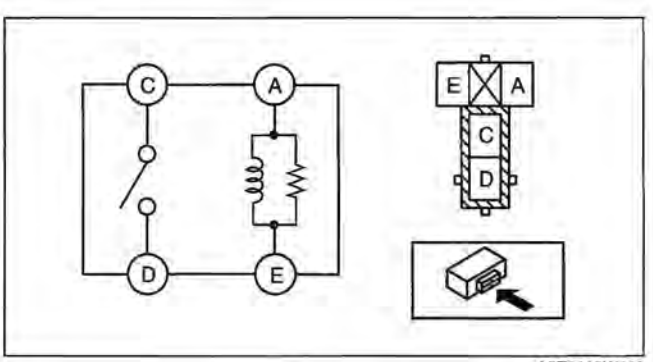

A6E8110W118

Type B

1. Remove the relay.
2. Inspect for continuity between the relay terminals.
   - If not as specified, replace the relay.

O—O : Continuity

Step	Terminal			
	A	B	C	D
1	O—O			
2	B+	GND	O—O	

A6E8110W123

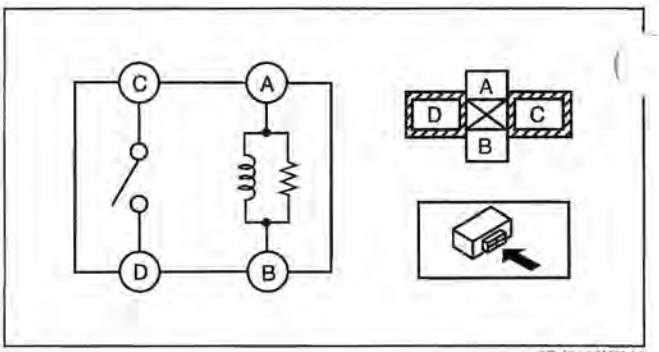

ADJ8110W012

09–22 INSTRUMENTATION/DRIVER INFO.

INSTRUMENTATION/DRIVER INFO.
LOCATION INDEX 09–22–2
INSTRUMENT CLUSTER
REMOVAL/INSTALLATION 09–22–3
Connector Removal Note 09–22–3
Instrument Cluster Removal Note 09–22–4
INSTRUMENT CLUSTER
CONFIGURATION 09–22–4
INSTRUMENT CLUSTER
DISASSEMBLY/ASSEMBLY 09–22–4
INSTRUMENT CLUSTER
INSPECTION 09–22–5
Speedometer 09–22–5
Tachometer 09–22–5
Fuel Gauge 09–22–6
Water Temperature Gauge 09–22–6
INSTRUMENT CLUSTER REPAIR 09–22–6
INSTRUMENT CLUSTER
INPUT/OUTPUT CHECK MODE 09–22–7
Check Code Table 09–22–7
Operating Order 09–22–8
Checking Order 09–22–9
Inspection of Check Codes 09–22–9
PID/DATA MONITOR AND RECORD
PROCEDURE 09–22–19
Monitor Item Table 09–22–19
FUEL GAUGE SENDER UNIT
REMOVAL/INSTALLATION [AWD] 09–22–19
Fuel Gauge Sender Unit 09–22–19
Fuel Gauge Sender Sub-Unit 09–22–19
FUEL GAUGE SENDER UNIT
INSPECTION [EXCEPT AWD] 09–22–23
FUEL GAUGE SENDER UNIT
INSPECTION [AWD] 09–22–23
OIL PRESSURE SWITCH
INSPECTION 09–22–23
HORN REMOVAL/INSTALLATION 09–22–24
INFORMATION DISPLAY
REMOVAL/INSTALLATION 09–22–24
Information Display Removal Note 09–22–24

INSTRUMENTATION/DRIVER INFO. LOCATION INDEX

E6U092200000W01

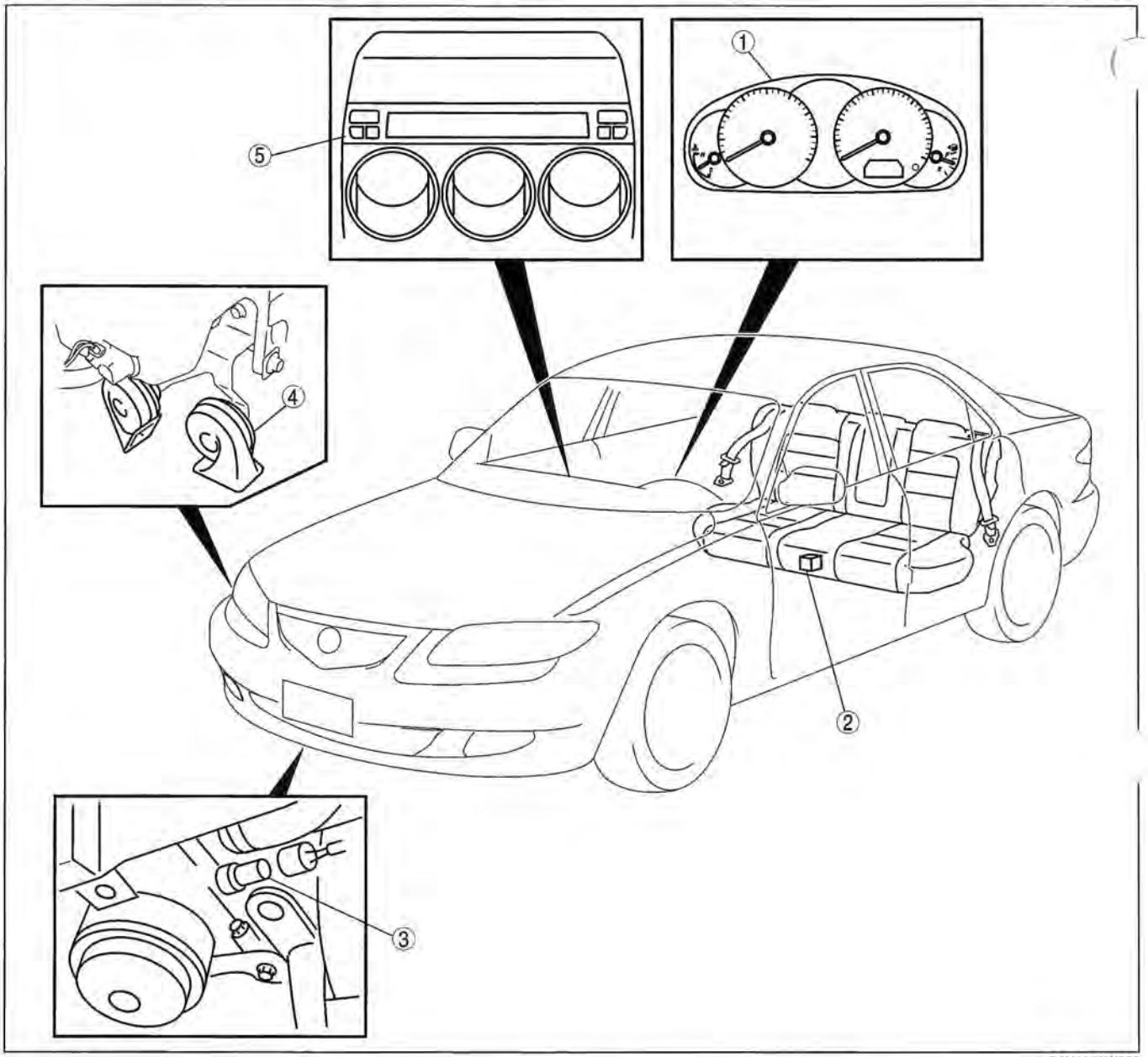

B6U0922W003

1	Instrument cluster (See 09–22–3 INSTRUMENT CLUSTER REMOVAL/INSTALLATION) (See 09–22–4 INSTRUMENT CLUSTER DISASSEMBLY/ASSEMBLY) (See 09–22–5 INSTRUMENT CLUSTER INSPECTION) (See 09–22–6 INSTRUMENT CLUSTER REPAIR) (See 09–22–7 INSTRUMENT CLUSTER INPUT/OUTPUT CHECK MODE)

2	Fuel gauge sender unit (See 09–22–19 FUEL GAUGE SENDER UNIT REMOVAL/INSTALLATION [AWD]) (See 09–22–23 FUEL GAUGE SENDER UNIT INSPECTION [EXCEPT AWD]) (See 09–22–23 FUEL GAUGE SENDER UNIT INSPECTION [AWD])
3	Oil pressure switch (See 09–22–23 OIL PRESSURE SWITCH INSPECTION)
4	Horn (See 09–22–24 HORN REMOVAL/INSTALLATION)
5	Information display (See 09–22–24 INFORMATION DISPLAY REMOVAL/INSTALLATION)

INSTRUMENT CLUSTER REMOVAL/INSTALLATION

E6U092255430W01

Caution

- **When replacing the instrument cluster, the configuration procedure must be performed before removing the instrument cluster. If the configuration procedure is not performed before removing the instrument cluster, it is possible that the instrument cluster will not operate normally.**

1. Configure the instrument cluster (only when replacing it). (See 09–22–4 INSTRUMENT CLUSTER CONFIGURATION.)
2. Disconnect the negative battery cable.
3. Pull down the adjusting lever of the tilt steering wheel and push the steering wheel down.
4. Pull the steering wheel toward you.
5. Remove the meter hood.
6. Remove in the order indicated in the table.

1	Screw
2	Connector (See 09–22–3 Connector Removal Note)
3	Instrument cluster (See 09–22–4 Instrument Cluster Removal Note)

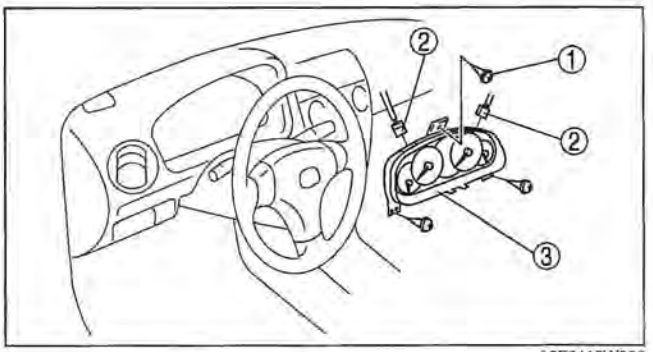

A6E8118W003

7. Install in the reverse order of removal.

Caution

- **The removed instrument cluster should be placed with the display side up to prevent grease from leaking from the meters.**

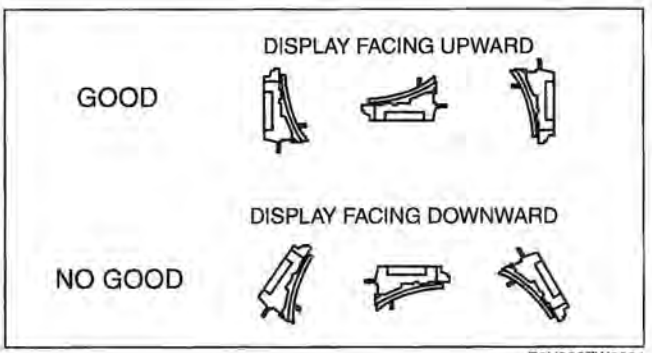

E6U922ZW5001

09–22

Connector Removal Note

1. Disconnect the connectors.
2. Rotate the clip **90°**, then remove the clip from the instrument cluster.

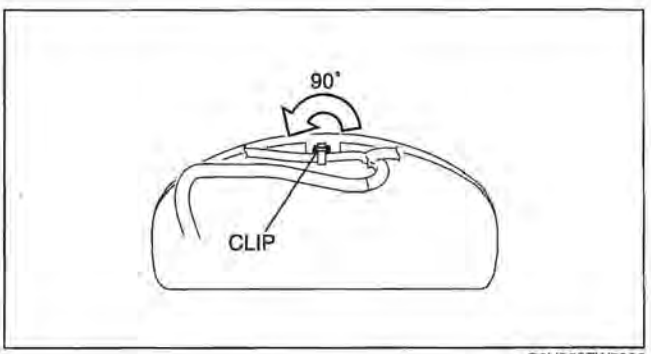

E6U922ZW5002

Instrument Cluster Removal Note

1. When removing the instrument cluster, in order to prevent damage to the lens, cover the steering shaft with a cloth.

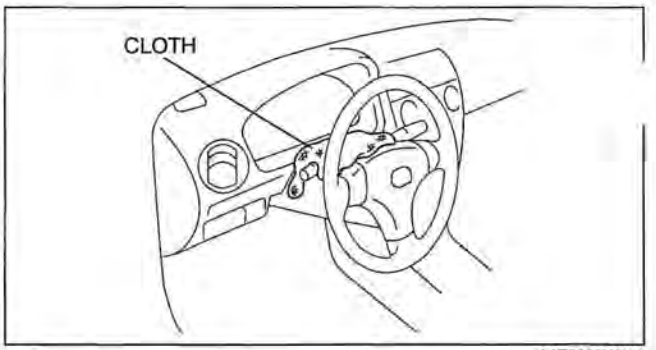

A6E8118W005

INSTRUMENT CLUSTER CONFIGURATION

E6U092255430W02

1. Connect the **SST** (WDS or equivalent) to the DLC-2.
2. Input vehicle information following the directions on the screen.
3. Select "MODULE PROGRAMMING".
4. Select "PROGRAMMABLE MODULE INSTALLATION".
5. Select the following items and perform procedures according to directions on the screen.

   Items
   - **"IC"**

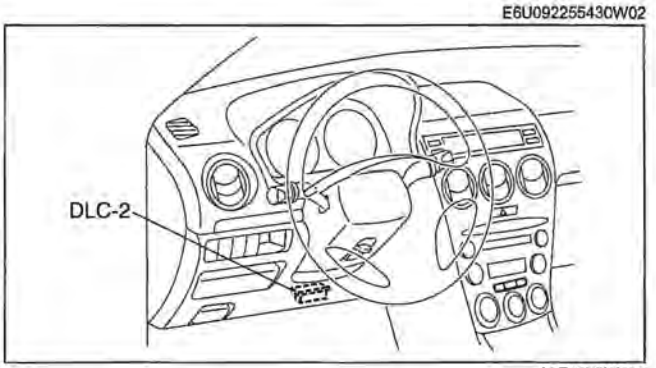

A6E3970W002

6. Retrieve DTCs using the **SST** (WDS or equivalent), then verify that there is no DTC present.
   - If DTC is present, perform applicable DTC inspection.

INSTRUMENT CLUSTER DISASSEMBLY/ASSEMBLY

E6U092255430W03

Caution
- **If the instrument cluster is dropped or the print plate is damaged, the system will not work properly and it may be the cause of trouble or malfunctions.**

1. Disassemble in the order indicated in the table.

1	Lens
2	Case
3	Meter unit

2. Assemble in the reverse order of disassembly.

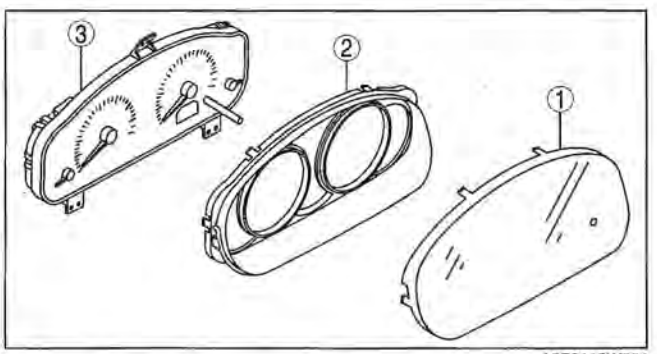

A6E8118W004

INSTRUMENT CLUSTER INSPECTION

E6U092255430W04

Speedometer

Using the input/output check mode

Inspect the speedometer by setting it in the input/output check mode DTC 12.

Using a speedometer tester

1. Adjust the tire air pressure to the specification.
2. Using a speedometer tester, verify that the speedometer indication is within the allowable ranges shown below.

Speedometer tester indication (km/h)	Allowable range (km/h)
20	18—22
40	38—42
60	58—62
80	78—82
100	97—102
120	117—122
140	136—142

Speedometer tester indication (mph)	Allowable range (mph)
10	9—11
20	19—21
30	29—31
40	39—41
50	49—51
60	59—61
70	69—71
80	78—82

3. Verify that fluctuation of the speedometer needle is within the allowable range.
   - If the speedometer needle does not move or the indication is outside of the allowable range, inspect the PCM, TCM, ABS HU/CM (vehicles with ABS), VSS (vehicles without ABS) and related wiring harnesses.
     — If the PCM, TCM, ABS HU/CM (vehicles with ABS), VSS (vehicles without ABS) and related wiring harnesses are normal, replace the instrument cluster.

Needle fluctuation allowable range
Within 3.0 km/h

Tachometer

Using the input/output check mode

1. Inspect the tachometer by setting it in the input/output check code 13.

Using the SSTs (WDS or equivalent)

Caution
- **If the engine speed exceeds the allowable range, the engine could be damaged. Therefore, wher inspecting the tachometer, do not allow the engine speed to exceed the allowable range indicatic on the tachometer.**

1. Connect the **SSTs** (WDS or equivalent) to the vehicle DLC-2 16-pin connector.
2. Access and monitor PIDs by **SSTs** (WDS or equivalent).

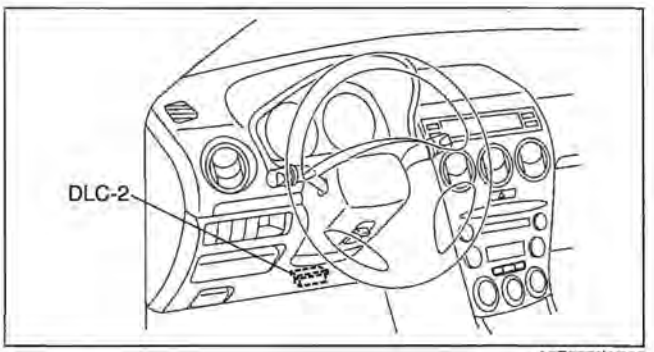

A6E3970W002

Fuel Gauge
1. Inspect the fuel gauge by setting it in the input/output check code 23.

Water Temperature Gauge
1. Inspect the water temperature gauge by setting it in the input/output check code 25.

INSTRUMENT CLUSTER REPAIR

E6U092255430W05

Note
- The needle of speedometer or tachometer may continue to rotate clockwise until it indicates over maximum graduation. If a customer complains of this concern, repair the needle position according to th following steps.

1. Verify the concern.
2. Turn the ignition switch to LOCK position.
3. Disconnect the negative battery cable.
4. Connect the negative battery cable.
5. Turn the ignition switch to ON position.
6. Verify that the needle returns to zero.
   - If the needle does not return to zero, replace the instrument cluster

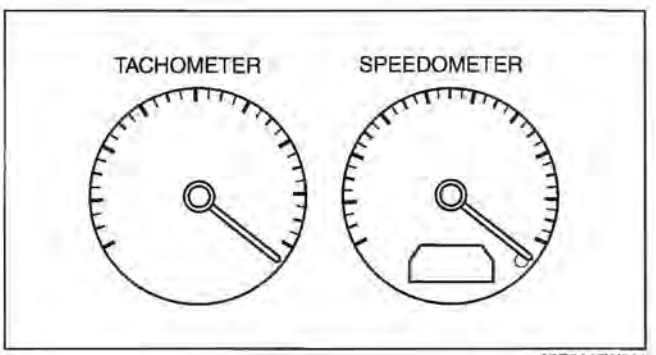

A6EB118W011

INSTRUMENT CLUSTER INPUT/OUTPUT CHECK MODE

E6U092255430W06

Note
- In this mode, it is possible to check the items in the following chart.

Check Code Table

Check code	Checked item	Related item
01	Buckle switch (driver's side)	Seat belt warning buzzer
04	Door switch	• Ignition key illumination • Key reminder warning buzzer • Lights-on reminder warning buzzer
08	TNS relay	• Lights-on reminder warning buzzer • Each illumination
12	Speedometer	Speedometer
13	Tachometer	Tachometer
14	Buzzer	Buzzer
16	Fuel-level warning light	Fuel-level warning light
22	Fuel gauge sender unit	Fuel gauge
23	Fuel gauge	Fuel gauge
25	Water temperature gauge	Water temperature gauge
26	LCD	LCD
31	Key reminder switch	Key reminder warning buzzer
33	Hazard warning switch	Turn and hazard indicator buzzer
55	Dimmer cancel switch	Instrument cluster illumination
58	Buckle switch (passenger's side)	Seat belt warning buzzer
59	Fuel system signal	Fuel gauge

Note
- Check codes which are not listed may be indicated, but they cannot be inspected.
- The check codes are displayed in numerical order. (While performing the inspection, if you want to inspect a check code of which the number is smaller than the code number you are currently inspecting, terminate the check mode then repeat the inspection from the beginning.)
- If a speed signal is input to the instrument cluster (the front wheels are rotated) the input/output check mode will be cancelled.
- The check codes can be fast-forwarded by pushing and holding the odometer/tripmeter switch for **1 second or more**.

Operating Order

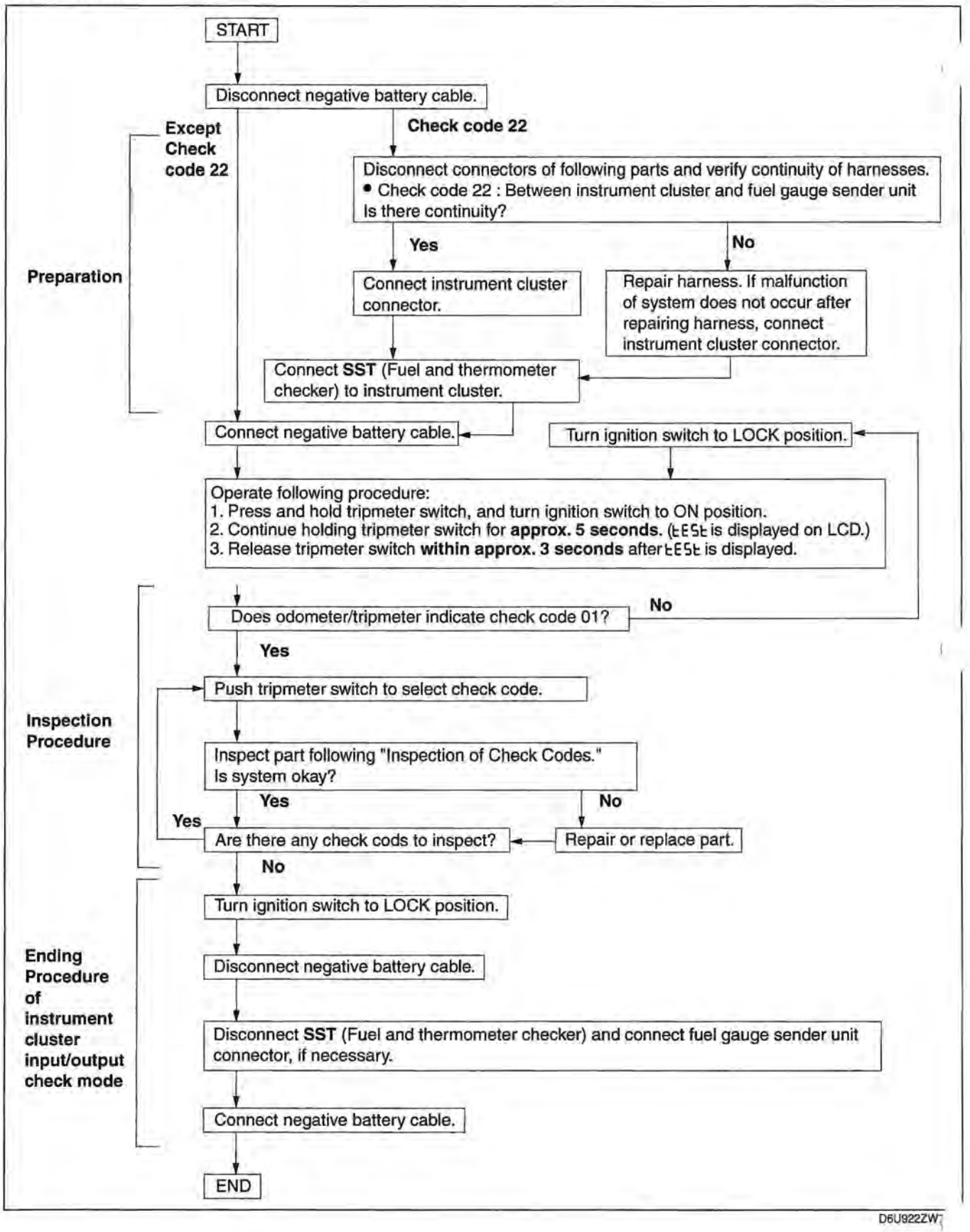

D6U922ZW

Checking Order

Note
- When inspecting more than two check codes, perform the inspection by following the priority order of inspection indicated in the chart below.

Priority order of inspection	IG switch position	Check code
1	ON	22
2		01, 04, 08, 12, 13, 14, 16, 23, 25, 26, 55, 58
3	LOCK	31, 33

Inspection of Check Codes
Check code 01

Check code 01	Buckle switch (drivewr's side) on/off signal

INSTRUMENT CLUSTER CONNECTOR

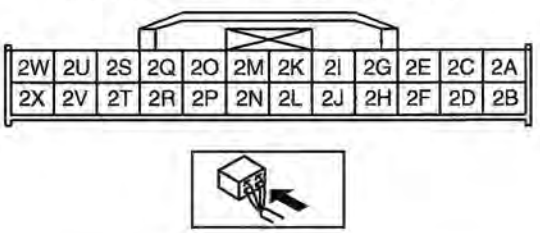

Diagnostic procedure

STEP	INSPECTION	INDICATION	ACTION
1	Unfasten driver's side seat belt. (Buckle switch on.)	on	Go to next step.
		oFF	Measure voltage at instrument cluster terminal 2G. Is voltage **0 V**? • If as specified, replace instrument cluster. • If not as specified, inspect following parts. — Buckle switch — Wiring harness (Buckle switch—SAS control module—instrument cluster)
2	Fasten driver's side seat belt. (Buckle switch off.)	on	Measure voltage at instrument cluster terminal 2G. Is voltage **B+**? • If as specified, replace instrument cluster. • If not as specified, inspect following parts. — Buckle switch — Wiring harness (Buckle switch—SAS control module—instrument cluster)
		oFF	Input signal to instrument cluster is okay.

Check code 04

Check code 04	Door switch on/off signal

INSTRUMENT CLUSTER CONNECTOR

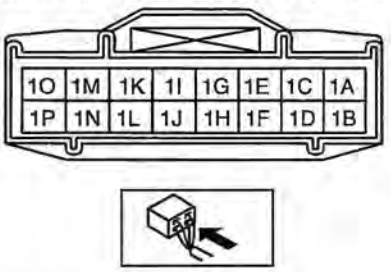

Diagnostic procedure

STEP	INSPECTION	INDICATION	ACTION
1	Open driver-side door. (Door switch on.)	on	Close driver-side door, then go to next step.
		oFF	Measure voltage at instrument cluster terminal 1J. Is voltage **0 V**? • If as specified, replace instrument cluster. • If not as specified, inspect following parts. — Door switch — Wiring harness (Instrument cluster—BCM—door switch)
2	Close driver-side door. (Door switch off.)	on	Measure voltage at instrument cluster terminals 1J. Is voltage **B+**? • If as specified, replace instrument cluster. • If not as specified, inspect following parts. — Door switch — Wiring harness (Instrument cluster—BCM—door switch)
		oFF	Input signal to instrument cluster is okay.

Check code 08

Check code 08	TNS relay on/off signal

INSTRUMENT CLUSTER CONNECTOR

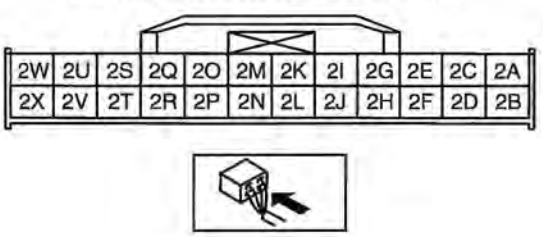

Diagnostic procedure

STEP	INSPECTION	INDICATION	ACTION
1	Turn headlight switch to TNS position. (TNS relay on.)	on	Go to next step.
		oFF	Measure voltage at instrument cluster terminal 2K. Is voltage **B+**? • If as specified, replace instrument cluster. • If not as specified, inspect following parts. — TNS relay — Wiring harness (Battery—TNS relay—instrument cluster)
2	Turn headlight switch off. (TNS relay off.)	on	Measure voltage at instrument cluster terminal 2K. Is voltage **0 V**? • If as specified, replace instrument cluster. • If not as specified, inspect following parts. — TNS relay — Wiring harness (TNS relay—instrument cluster)
		oFF	Input signal to instrument cluster is okay.

Check code 12

Check code 12	Operation signal to speedometer		
INSPECTION	**INDICATION**	**SITUATION**	**ACTION**
Wait for **2 seconds** after selecting check code 12.	00	Speedometer needle moves full scale then returns to **60 km/h or 60 MPH**.	Speedometer is okay.
		Other than stated above.	Replace instrument cluster.
	Err	—	

Check code 13

Check code 13	Operation signal to tachometer		
INSPECTION	**INDICATION**	**SITUATION**	**ACTION**
Wait for **2 seconds** after selecting check code 13.	00	Tachometer needle moves full scale then returns to **3,000 rpm**.	Tachometer is okay.
		Other than stated above.	Replace instrument cluster.
	Err	—	

Check code 14

Check code 14	Operation signal to buzzer		
INSPECTION	**INDICATION**	**SITUATION**	**ACTION**
Wait for **2 seconds** after selecting check code	on (Fixed)	Buzzer sounds.	Buzzer is okay.
		Buzzer does not sound.	Replace instrument cluster.

Check code 16

Check code 16	Operation signal to fuel-level warning light		
INSPECTION	**INDICATION**	**SITUATION**	**ACTION**
Wait for **2 seconds** after selecting check code 16.	17 (Turns on and off)	Fuel-level warning light turns on and off **three times.**	Fuel-level warning light is okay.
		Other than stated above.	Replace instrument cluster.

Check code 22

Check code 22	Fuel level signal

INSTRUMENT CLUSTER CONNECTOR

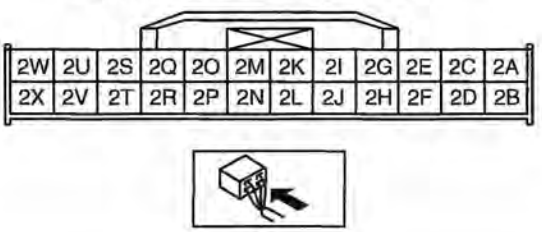

Diagnostic procedure

STEP	INSPECTION	INDICATION	ACTION
1	Select check code 22 with fuel gauge sender unit connector disconnected.	124 | 127	Go to next step.
		Other than stated above.	Go to Step 6.
2	Connect instrument cluster terminals 2D and 2M.	000 | 003	Go to next step.
		Other than stated above.	Go to Step 6.
3	Using **SST** (Fuel and thermometer checker) or resistor, input **20 ohms** between instrument cluster terminals 2D and 2M.	017 | 023	Go to next step.
		Other than stated above.	Go to Step 6.
4	Using **SST** (Fuel and thermometer checker) or resistor, input **60 ohms** between instrument cluster terminals 2D and 2M.	057 | 063	Go to next step.
		Other than stated above.	Go to Step 6.

STEP	INSPECTION	INDICATION	ACTION
5	Using **SST** (Fuel and thermometer checker) or resistor, input **100 ohms** between instrument cluster terminals 2D and 2M.		Inspect fuel gauge sender unit.
		Other than stated above.	Go to next step.
6	Inspect the wiring harness and connector between instrument cluster and fuel gauge sender unit. • If there is any malfunction, repair or replace the wiring harness, BCM or connector. • If there is no malfunction, replace the instrument cluster.		

Check code 23

Check code 23	Operation signal to fuel gauge		
INSPECTION	**INDICATION**	**SITUATION**	**ACTION**
Wait for **2 seconds** after selecting check code 23.	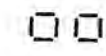	Fuel gauge indicates in following order every **2 seconds**. • F → 1/2 → E → F (fixed)	Fuel gauge is okay.
		Other than stated above.	Replace instrument cluster.
	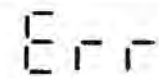	Replace instrument cluster.	

Check code 25

Check code 25	Operation signal to water temperature gauge		
INSPECTION	**INDICATION**	**SITUATION**	**ACTION**
Wait for **2 seconds** after selecting check code 25.	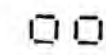	Water temperature gauge indicates in following order for every **2 seconds**. • H → Center → C → H (fixed)	Water temperature gauge is okay.
		Other than stated above.	Replace instrument cluster.
	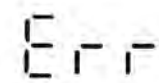	Replace instrument cluster.	

Check code 26

Check code 26	LCD indication		
INSPECTION	**INDICATION**	**SITUATION**	**ACTION**
Select check code 26.		• Display is normal. • Warning and indicator light illuminated. — Glow indicator light — Generator warning light — AT warning light — DSC/TCS indicator light — DSC OFF light — ABS warning light — Brake system warning light — Cruise main indicator light — Cruise set indicator light — TCS OFF indicator light — Selector indicator light — AWD indicator light — MIL — Keyless warning/ indicator light	LCD is okay.
		Other than stated above.	Replace instrument cluster.

Check code 31

Check code 31	Key reminder on/off signal

INSTRUMENT CLUSTER CONNECTOR

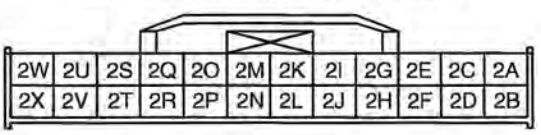



Diagnostic procedure

STEP	INSPECTION	INDICATION	ACTION
1	Remove key from steering lock and then insert key into steering lock after selecting check code 31. (Key reminder switch on.)	on	Go to next step.
		oFF	Measure voltage at instrument cluster terminal 2B. Is voltage **B+**? • If as specified, replace instrument cluster. • If not as specified, replace following parts. — Key reminder switch — Wiring harness (Battery—key reminder switch—instrument cluster)
2	Remove key from steering lock (Key reminder switch off.)	on	Measure voltage at instrument cluster terminal 2B. Is voltage **0 V**? • If as specified, replace instrument cluster. • If not as specified, inspect following parts. — Key reminder switch — Wiring harness (Key reminder switch—instrument cluster)
		oFF	Input signal to instrument cluster is okay.

Check code 33

Check code 33	Hazard warning switch on/off signal

INSTRUMENT CLUSTER CONNECTOR

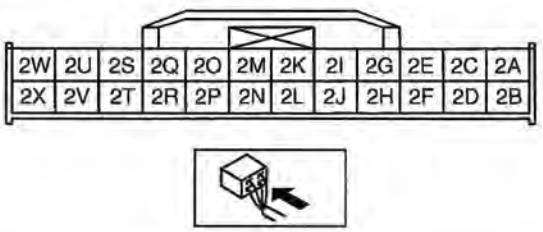

Diagnostic procedure

STEP	INSPECTION	INDICATION	ACTION
1	Turn the hazard warning switch on after selecting check code 33.	on⇔oFF	Go to next step.
		on (Fixed)	Measure voltage at instrument cluster terminal 2N and 2R. Is voltage **B+**? • If not as specified, go to the next step. • If as specified, inspect following parts. — Hazard warning switch — BCM — Wiring harness (Hazard warning switch—BCM—instrument cluster) • If there is no malfunction, replace the instrument cluster.
		oFF (Fixed)	Measure voltage at instrument cluster terminal 2N and 2R. Is voltage **0 V**? • If not as specified, go to the next step. • If as specified, inspect following parts. — Hazard warning switch — BCM — Wiring harness (Hazard warning switch—BCM—instrument cluster) • If there is no malfunction, replace the instrument cluster.
2	Turn the hazard warning switch off.	oFF (Fixed)	Input signal to instrument cluster is okay.
		Other than fixed "OFF"	Inspect following parts. • Hazard warning switch • BCM • Wiring harness (Hazard warning switch—BCM—instrument cluster) — If there is no malfunction, replace the instrument cluster.

Check code 55

Check code 55	**Dimmer cancel switch on/off signal**

INSTRUMENT CLUSTER CONNECTOR

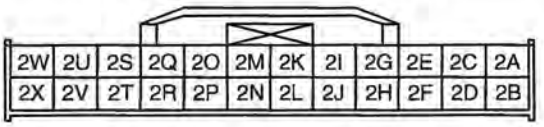



Diagnostic procedure

STEP	INSPECTION	INDICATION	ACTION
1	Turn the panel light control switch to the dimmer cancel position after selecting check code 55.	on	Go to next step.
		oFF	Measure voltage at instrument cluster terminal 2A. Is voltage **4 V**? • If as specified, replace instrument cluster. • If not as specified, inspect following parts. — Panel light control switch — Wiring harness (Panel light control switch—instrument cluster)
2	Turn the panel light control switch to the other position.	on	Measure voltage at instrument cluster terminal 2A. Is voltage **0 V**? • If as specified, replace instrument cluster. • If not as specified, inspect following parts. — Panel light control switch — Wiring harness (Panel light control switch—instrument cluster)
		oFF	Input signal to instrument cluster is okay.

Check code 58

Check code 58	**Buckle (passenger's side) switch on/off signal**

INSTRUMENT CLUSTER CONNECTOR

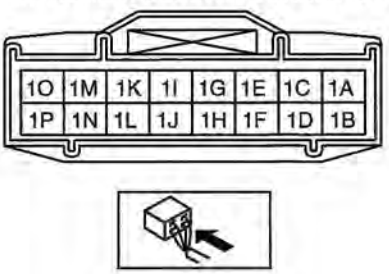

Diagnostic procedure

STEP	INSPECTION	INDICATION	ACTION
1	Seat one person in the passenger's seat, and unfasten passenger-side seat belt. (Seat weight sensor and buckle switch ON)	on	Go to next step.
		oFF	Measure voltage at instrument cluster terminal 1A. Is voltage **0 V**? • If as specified, replace instrument cluster. • If not as specified, inspect following parts. — Buckle switch (passenger's side) — Seat weight sensor control module — Seat weight sensor — SAS control module — Wiring harness (Buckle switch (passenger's side)—SAS control module, seat weight sensor—Seat weight sense control module—SAS control module)

STEP	INSPECTION	INDICATION	ACTION
2	Seat one person in the passenger's seat, and fasten passenger-side seat belt. (Seat weight sensor ON and buckle switch OFF) Seat no person in the passenger's seat, and unfasten passenger-side seat belt. (Seat weight sensor OFF and buckle switch ON) Seat no person in the passenger's seat, and fasten passenger-side seat belt. (Seat weight sensor and buckle switch OFF)		Measure voltage at instrument cluster terminal 1A. Is voltage **B+**? • If as specified, replace instrument cluster. • If not as specified, inspect following parts. — Buckle switch (passenger's side) — Seat weight sensor control module — Seat weight sensor — SAS control module — Wiring harness (Buckle switch (passenger's side)—SAS control module, seat weight sensor—Seat weight sense control module—SAS control module)
			Input signal to instrument cluster is okay.

Check code 59
Diagnostic procedure

STEP	INSPECTION	INDICATION	ACTION
1	The three digits number is indicated after selecting check code 59. Confirm the first digit from the right.	First digit from the right 	The CAN system is okay. Go to next step.
		First digit from the right 	The DTC of CAN system is detected. Perform the DTC inspection. (See 09–02B–4 DTC TABLE [MULTIPLEX COMMUNICATION SYSTEM (L3 WITH TC)])(See 09–02A–4 DTC TABLE [MULTIPLEX COMMUNICATION SYSTEM (L3, AJ)]) • If the CAN system is okay, replace the instrument cluster. Go to next step.
2	Confirm the second digit from the right.	Second digit from the right 	The wiring harnesses between the fuel gauge sender unit and instrument cluster are okay. Go to next step.
		Second digit from the right 	Inspect following parts. • Fuel gauge sender unit • Wiring harness (Fuel gauge sender unit—instrument cluster) — If fuel gauge sender unit and wiring harness are okay, replace the instrument cluster. Go to next step.
3	Confirm the third digit from the right.	Third digit from the right 	The fuel pulse signal from the PCM is okay.
		Third digit from the right 	Inspect the PCM. (See 01–02A–18 DTC TABLE [L3].) (See 01–02B–14 DTC TABLE [L3 WITH TC].)) (See 01–02C–13 DTC TABLE [AJ].) (See 01–40A–9 PCM INSPECTION [L3].) (See 01–40B–6 PCM INSPECTION [L3 WITH TC].) (See 01–40C–6 PCM INSPECTION [AJ].) • If the PCM is okay, replace the instrument cluster.

PID/DATA MONITOR AND RECORD PROCEDURE

1. Connect the **SST** (WDS or equivalent) to the vehicle DLC-2 16-pin connector.
   Access and monitor PIDs using the **SST** (WDS or equivalent).

E6U092255430W07

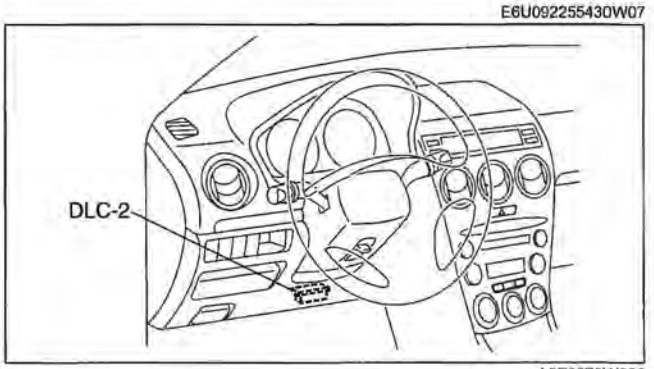

A6E3970W002

Monitor Item Table

- The PID/DATA monitoring items for the instrument cluster is as shown in the table below.

—: Not applicable

PID item	Definition	Unit/Condition		Terminal
CCNT_HE	Continuous codes	Number of continuous codes		—
ECT_GAUGE	Temperature gauge	°C	°F	2W, 2X
ODO COUNT	Total distance	km	mile	
SPDOMETER	Speedometer	km/h	mile/h	
TACH	Tachometer	rpm		

09-22

FUEL GAUGE SENDER UNIT REMOVAL/INSTALLATION [AWD]

E6U092260960W02

Fuel Gauge Sender Unit

1. Remove the fuel gauge sender unit. (See 01–14B–9 FUEL PUMP UNIT REMOVAL/INSTALLATION [L3 WITH TC].)
2. Install in the reverse order of removal.

Fuel Gauge Sender Sub-Unit

Warning

- **Fuel line spills and leakage are dangerous. Fuel can ignite and cause serious injuries or death and damage. Fuel can also irritate skin and eyes. To prevent this, always complete the "Fuel Line Safety Procedure".**
- **A person charged with static electricity could cause a fire or explosion, resulting in death or serious injury. Before draining fuel, make sure to discharge static electricity by touching a vehicle.**

Caution

- **Because the fuel tank is constructed such that the fuel level is higher than the installation surface of the fuel pump, fuel leakage could occur. If the fuel gauge indicates a fuel level of half or more, perform the following Steps 1—14 to drain the fuel.**
- **Disconnecting/connecting the quick release connector without cleaning it may possibly cause damage to the fuel pipe and quick release connector. Always clean the quick release connector joint area before disconnecting/connecting using a cloth or soft brush, and make sure that it is free of foreign material.**

1. Complete the "BEFORE REPAIR PROCEDURE".
2. Remove the plug hole plate.
3. Disconnect the quick release connector connected to the fuel distributor.
4. Connect a long hose to the disconnected quick release connector and drain the fuel into a container used for collecting gasoline.
5. Start the fuel pump using the following procedure.

Using WDS or equivalent

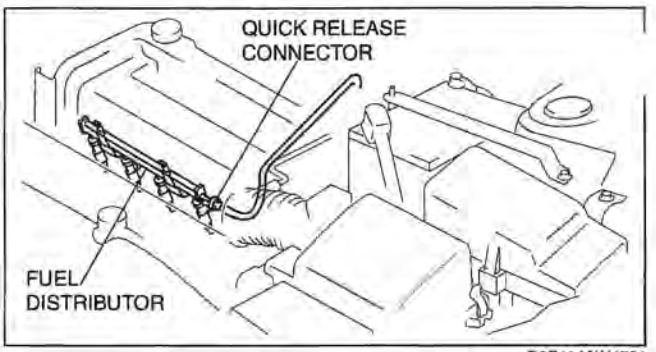

D6E114AW4701

1. Connect the WDS or equivalent to the DLC-2.
2. Using the simulation function "FP", start the fuel pump.

Without using WDS or equivalent

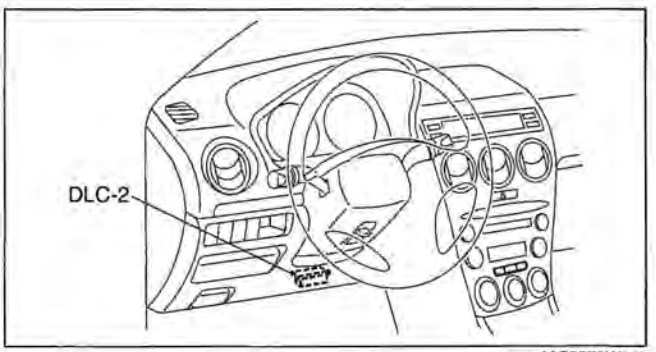

A6E3970W002

1. Short the check connector terminal F/P to body GND using a jumper wire.
2. Turn the ignition switch to ON position to operate the fuel pump.

Caution

- **The fuel pump could be damaged if it is operated (fuel pump idling) while there is no fuel in the fuel tank. Verify the amount of fuel being discharged from the hose and stop operation of the fuel pump when essentially no fuel is being discharged.**

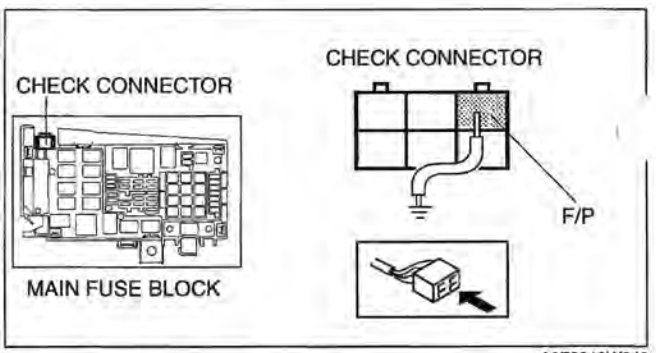

A6E3912W049

Note

- If the fuel tank is full, drain **approx. 40 L {10.6 US gal, 8.8 Imp gal}** of fuel until the fuel gauge indicates **approx. 3/8** of a tank.

6. Stop operation of the fuel pump when essentially no fuel is being discharged.
7. Reconnect the quick release connector to the fuel distributor.
8. Start the engine and idle it for 15 min (to transfer fuel from the sub-tank to the main tank).
9. Stop the engine.
10. Complete the "BEFORE REPAIR PROCEDURE".
11. Remove the plug hole plate.

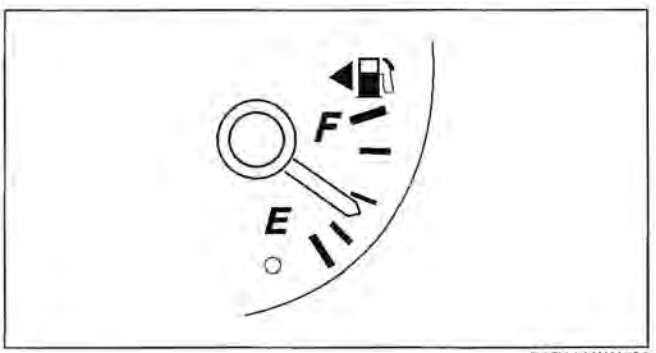

D6E114AW4702

12. Disconnect the quick release connector connected to the fuel distributor.
13. Connect a long hose to the disconnected quick release connector and drain the fuel into a container used for collecting gasoline.
14. Start the fuel pump using the following procedure.

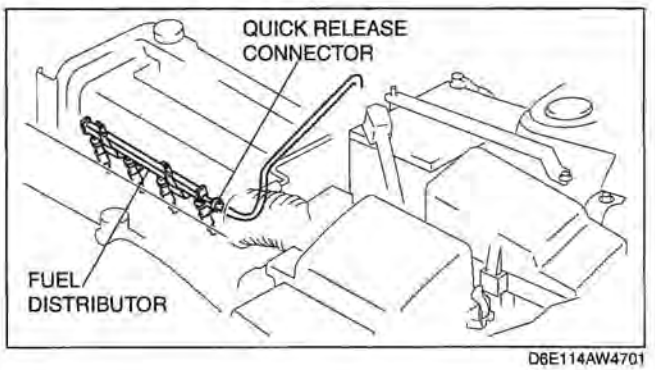

D6E114AW4701

Using WDS or equivalent
Connect the WDS or equivalent to the DLC-2.
Using the simulation function "FP", start the fuel pump.

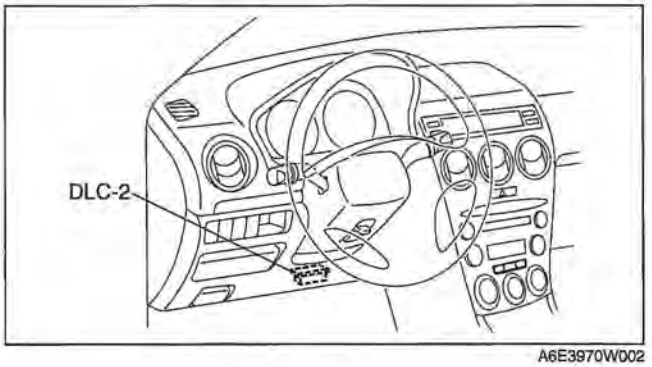

A6E3970W002

Without using WDS or equivalent
1. Short the check connector terminal F/P to body GND using a jumper wire.
2. Turn the ignition switch to ON position to operate the fuel pump.

Caution
- **The fuel pump could be damaged if it is operated (fuel pump idling) while there is no fuel in the fuel tank. Verify the amount of fuel being discharged from the hose and stop operation of the fuel pump when essentially no fuel is being discharged.**

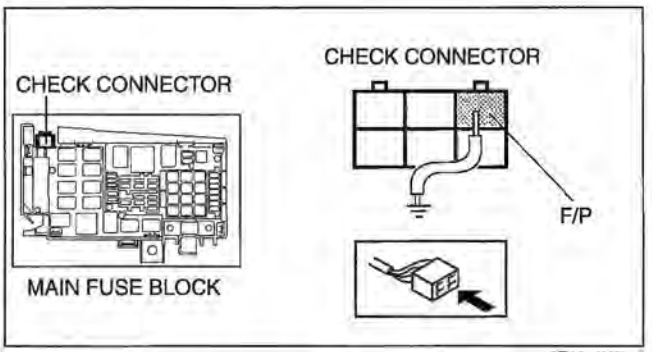

A6E3912W049

Note
- If the fuel tank is full, drain **approx. 55 L {15 US gal, 12 Imp gal}** of fuel until the fuel gauge indicates E position.

15. Stop operation of the fuel pump when essentially no fuel is being discharged.
16. Disconnect the negative battery cable.
17. Complete the following in order to the work area.
    (1) Loosen the bolt of the fuel tank strap.
    (2) Lower the fuel tank to a position where the **SST** can be attached from the service hole cover.
18. Remove the rear seat cushion.

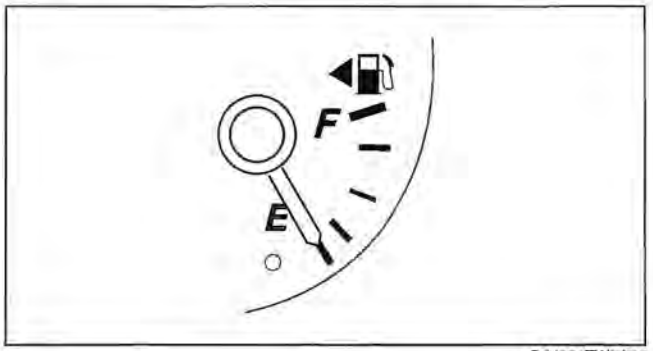

D6J922ZW5A02

19. Remove in the order indicated in the table.

1	Service hole cover
2	Connector
3	Plastic fuel hose (fuel tank side, transfer hose part) (See 01–14B–21 QUICK RELEASE CONNECTOR REMOVAL/INSTALLATION [L3 WITH TC])
4	Fuel gauge sender cap (See 09–22–22 Fuel gauge sender cap removal note) (See 09–22–22 Fuel Gauge Sender Cap Installation Note)
5	Packing
6	Fuel gauge sender sub-unit

20. Install in the reverse order of removal.
21. Complete the "AFTER REPAIR PROCEDURE".
22. Complete the "Fuel leak inspection after fuel gauge sender sub-unit installation." (See 09–22–23 Fuel leak inspection after fuel gauge sender sub-unit installation.)

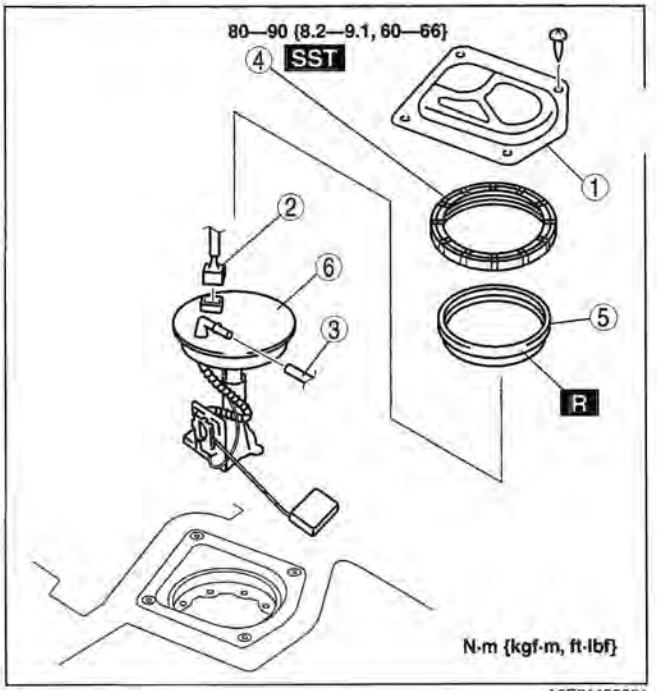

A6E81182001

Fuel gauge sender cap removal note

1. Using the **SST**, remove the fuel gauge sender cap.

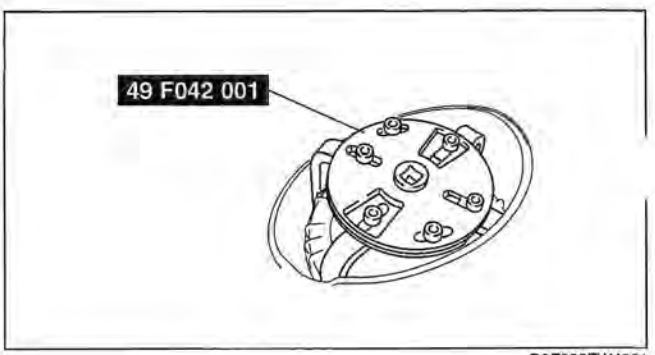

D6E922ZW4901

Fuel Gauge Sender Cap Installation Note

1. Verify that the fuel tank mark is aligned with the fuel gauge sender sub-unit mark as shown.
2. Using the **SST**, tighten the fuel gauge sender cap without shifting the mark.

Tightening torque
80—90 N·m {8.2—9.1 kgf·m, 60—66 ft·lbf}

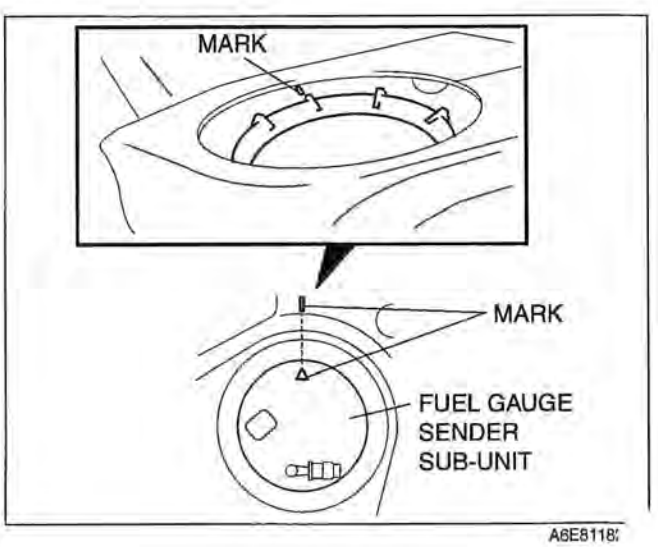

A6E8118

Fuel leak inspection after fuel gauge sender sub-unit installation

1. Drive the vehicle.
2. Perform a quick start and a hard brake **5—6 times**.
   Stop the vehicle.
   Verify that there is no fuel leakage near the fuel pump unit in the vehicle interior.

FUEL GAUGE SENDER UNIT INSPECTION [EXCEPT AWD]

E6U092260960W03

1. Move the float to the topmost and bottommost positions, and verify that the resistance between terminals A and B of the unit and the position of the float are as indicated in the figure.
   - If they are not as indicated, replace the fuel gauge sender unit.

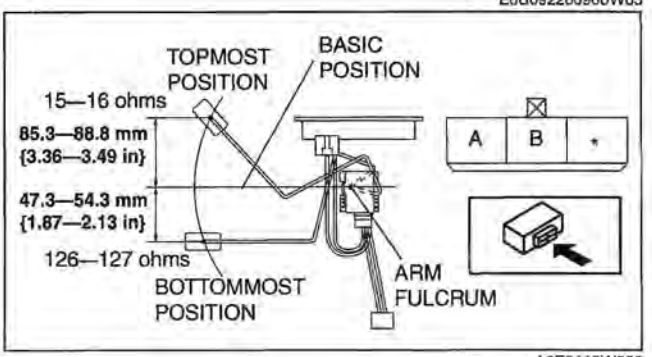

A6E8118W002

FUEL GAUGE SENDER UNIT INSPECTION [AWD]

E6U092260960W04

1. Move the float to the topmost and bottommost positions, and verify that the resistance between terminals A and B of the unit and the position of the float are as indicated in the figure.

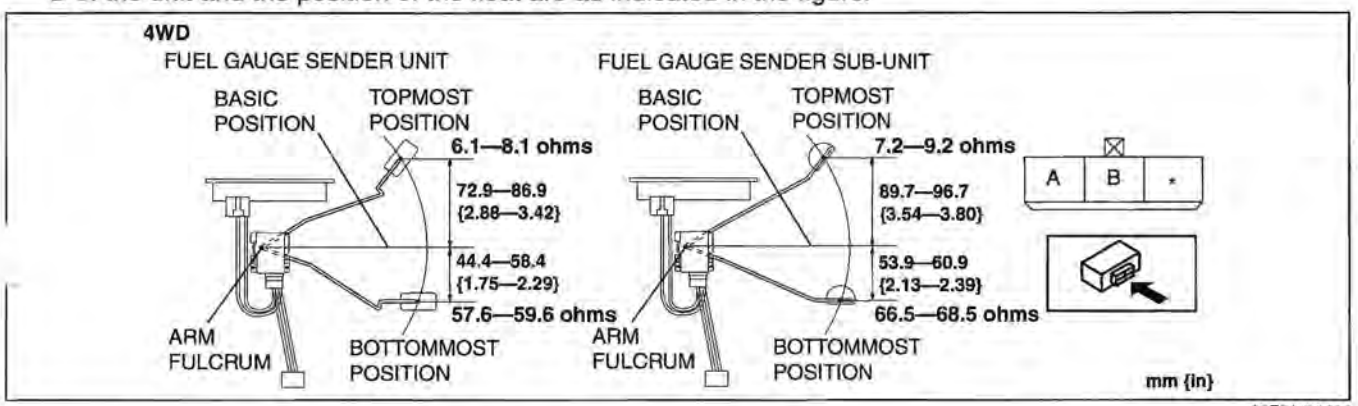

A6E81181103

- If they are not as indicated, replace the fuel gauge sender unit.

OIL PRESSURE SWITCH INSPECTION

E6U092218500W01

1. Verify that the oil pressure warning light illuminates when the ignition switch is at the ON position.
2. Verify that the oil pressure warning light goes off when the engine is started.
   - If the oil pressure warning light does not illuminate or remains illuminated, inspect the related wiring harness.
     — If the related wiring harness are normal, inspect the oil pressure. (See 01–11A–5 OIL PRESSURE INSPECTION [L3, AJ].) (See 01–11B–3 OIL PRESSURE INSPECTION [L3 WITH TC].)
       - If the oil pressure is normal, replace the oil pressure switch.

HORN REMOVAL/INSTALLATION

E6U092268790W01

1. Disconnect the negative battery cable.
2. Bend the mud guard.
3. Remove in the order indicated in the table.

1	Bolt
2	Connector
3	Horn

4. Install in the reverse order of removal.

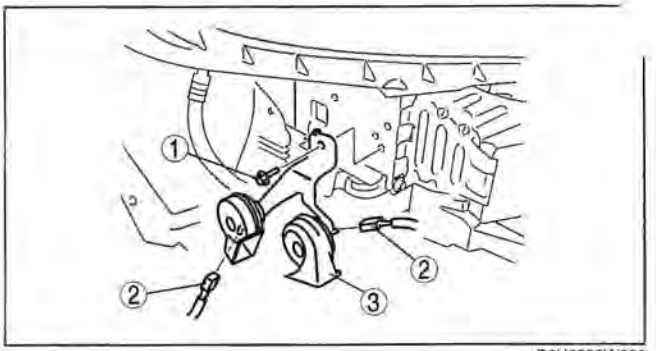

B6U0922W002

INFORMATION DISPLAY REMOVAL/INSTALLATION

E6U092255000W01

1. Disconnect the negative battery cable.
2. Remove the center panel module. (See 09–20–4 CENTER PANEL UNIT REMOVAL/INSTALLATION.)
3. Remove the center box.
4. Remove in the order indicated in the table.
5. Install in the reverse order of removal.

1	Short harness
2	Information display (See 09–22–24 Information Display Removal Note)
3	Center box

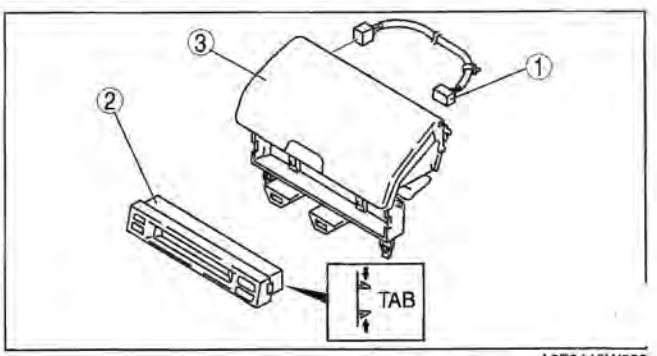

A6E8118W008

Information Display Removal Note

1. Squeeze the tabs of information display and pull forward to remove it.

09–40 CONTROL SYSTEM

CONTROL SYSTEM
LOCATION INDEX..... 09–40–1
BODY CONTROL MODULE (BCM)
REMOVAL/INSTALLATION..... 09–40–1
BODY CONTROL MODULE (BCM)
INSPECTION 09–40–2
Terminal Voltage Table (Reference) ... 09–40–2

CONTROL SYSTEM LOCATION INDEX

E6U094000000W01

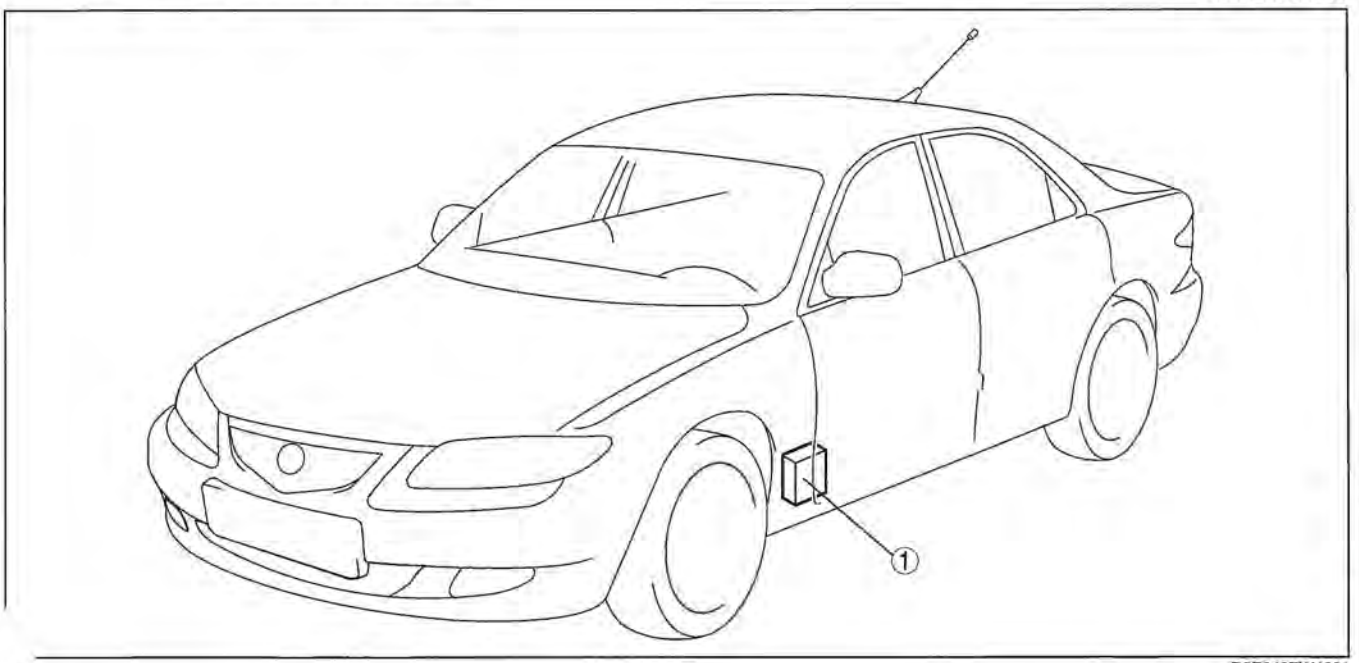

D6E940ZW4001

1	Body control module (See 09–40–1 BODY CONTROL MODULE (BCM) REMOVAL/INSTALLATION) (See 09–40–2 BODY CONTROL MODULE (BCM) INSPECTION)

BODY CONTROL MODULE (BCM) REMOVAL/INSTALLATION

E6U094000200W01

1. Disconnect the negative battery cable.
2. Remove the front side trim. (Left side) (See 09–17–11 FRONT SIDE TRIM REMOVAL/INSTALLATION.)
3. Remove the fuse block.
4. Remove in the order indicated in the table.

1	Bolt
2	Connector
3	BCM

5. Install in the reverse order of removal.

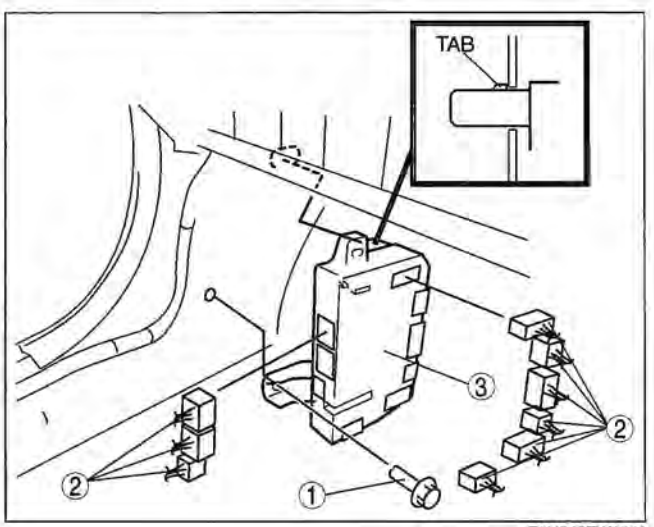

E6U940ZW1001

BODY CONTROL MODULE (BCM) INSPECTION

E6U094000200W02

1. Measure the voltage or inspect for continuity according to the Terminal Voltage Table (Reference).
   - If the voltage is not as specified in the Terminal Voltage Table (Reference), inspect the parts under "Inspection item(s)" and related wiring harnesses.

Terminal Voltage Table (Reference)

BODY CONTROL MODULE (BCM) WIRING HARNESS SIDE CONNECTOR

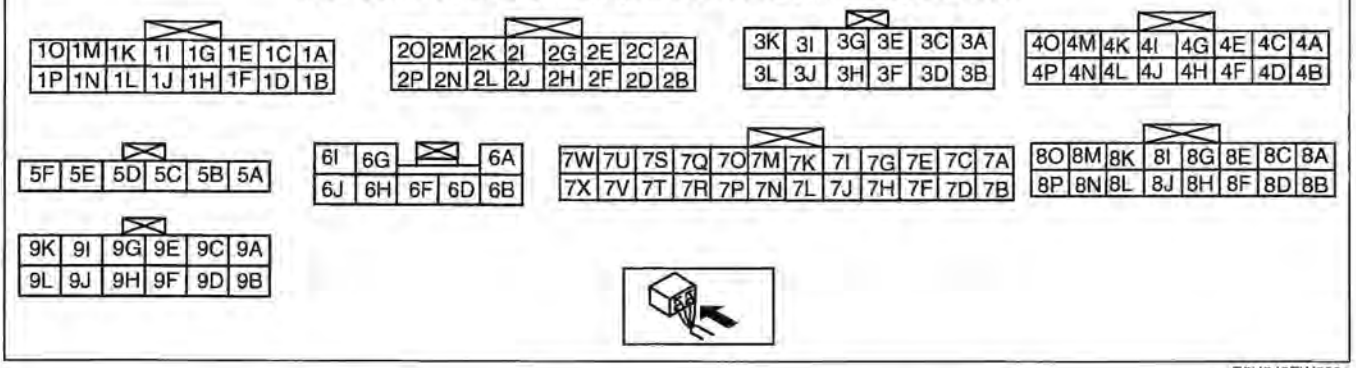

E6U940ZW5001

Terminal	Signal name	Connected to	Measured condition	Voltage (V)/ Continuity	Inspection item(s)
1A	Liftgate lock control	Liftgate lock actuator (5HB, WGN)	Lock actuator locking	1.0 or less → B+ → 1.0 or less	• Liftgate lock actuator (5HB, WGN) • Related wiring harnesses
			Other	1.0 or less	
1C	Liftgate unlock control	Liftgate lock actuator (5HB, WGN)	Lock actuator unlocking	1.0 or less → B+ → 1.0 or less	• Liftgate lock actuator (5HB, WGN) • Related wiring harnesses
			Other	1.0 or less	
1F	Door switch signal (LR)	Door switch (LR)	Door open (LR) (Door switch on)	1.0 or less	• Door switch (LR) • Related wiring harnesses
			Doors closed (LR) (Door switch off)	B+	
1G	Headlight leveling (manual) GND	Headlight leveling actuator	Under any condition: Inspect for continuity to headlight leveling actuator.	Continuity detected	• Related wiring harnesses
1I	Interior light control	• Map light • Interior light	**Within 5 min** after any door is opened.	1.0 or less	• Map light • Interior light • Related wiring harnesses
			5 min or more after any door is opened.	B+	
			All doors closed	B+	
1K	Interior light power supply	• Map light • Interior light	Under any condition.	B+	• Map light • Interior light • Related wiring harnesses
1M	Brake light power supply	Brake light	Stop light switch is ON	B+	• Brake light • Related wiring harnesses
			Stop light switch is OFF	1.0 or less	
1O	Back-up light power supply	Back-up light	Back-up light switch is ON	B+	• Back-up light • Related wiring harnesses
			Back-up light switch is OFF	1.0 or less	
1P	Taillight power supply	Taillight	TNS switch is ON	B+	• Taillight • Related wiring harnesses
			TNS switch is OFF	1.0 or less	
2A	Fuel level signal 2 output	Instrument cluster	Under any condition: Inspect for continuity to instrument cluster.	Continuity detected	• Related wiring harnesses
2B	Fuel level signal 1 output	Instrument cluster	Under any condition: Inspect for continuity to instrument cluster.	Continuity detected	• Related wiring harnesses
2C	Woofer signal 1	Woofer	Under any condition: Inspect for continuity to woofer.	Continuity detected	• Related wiring harnesses

Terminal	Signal name	Connected to	Measured condition	Voltage (V)/ Continuity	Inspection item(s)
2D	Rear wiper motor power supply	Rear wiper motor	Rear wiper switch is ON	B+	• Rear wiper motor • Related wiring harnesses
			Rear wiper switch is OFF	1.0 or less	
2E	Woofer signal 2	Woofer	Under any condition: Inspect for continuity to woofer.	Continuity detected	• Related wiring harnesses
2F	• Trunk compartment light signal (4SD) • cargo compartment light switch signal (5HB, WGN)	• Trunk compartment light switch (4SD) • Cargo compartment light switch (5HB, WGN)	Trunk lid/liftgate is open. (Switch on)	1.0 or less	• Trunk compartment light switch (4SD) • Cargo compartment light switch (5HB, WGN) • Related wiring harnesses
			Trunk lid/liftgate is closed. (Switch off)	B+	
2G	Woofer GND	GND	Under any condition: Inspect for continuity to GND.	Continuity detected	• Related wiring harnesses
2I	Rear turn light (RH) control	Rear turn light (RH)	Turn switch (RH) is ON	Alternates between 1.0 or less and B+	• Rear turn light (RH) • Related wiring harnesses
			Turn switch is OFF	1.0 or less	
2J	Autostop switch signal	Autostop switch	Rear wiper moving	B+	• Autostop switch (rear wiper motor) • Related wiring harnesses
			Rear wiper stopped	1.0 or less	
2K	Rear turn light (LH) control	Rear turn light (LH)	Turn switch (LH) is ON	Alternates between 1.0 or less and B+	• Rear turn light (LH) • Related wiring harnesses
			Turn wiper switch is OFF	1.0 or less	
2L	Unlock input	Trunk lid key cylinder switch	At the moment key cylinder is neutral position	5	• Trunk lid key cylinder switch • Related wiring harnesses
			At the moment key cylinder is unlocked	1.0 or less	
2M	Sunroof power supply	Sunroof switch	Under any condition	B+	• Sunroof switch • Battery
2O	Auto leveling control module signal	Auto leveling control module	Under any condition: Inspect for continuity to auto leveling control module.	Continuity detected	• Related wiring harnesses
3A	Power supply (rear wiper)	R.WIP 10 A fuse	Ignition switch is ON position.	B+	• R.WIP 10 A fuse • Battery
3B	Turn light (RH) signal output	Instrument cluster	Turn switch (RH) is ON	Alternates between 1.0 or less and B+	• Related wiring harnesses
			Turn switch is OFF	1.0 or less	
3C	Rear washer switch signal	Rear washer switch	Rear washer switch is ON	1.0 or less	• Rear washer switch • Rear washer motor • Related wiring harnesses
			Rear washer switch is OFF	B+	
3D	Turn light (LH) signal output	Instrument cluster	Turn switch (LH) is ON	Alternates between 1.0 or less and B+	• Related wiring harnesses
			Turn switch is OFF	1.0 or less	
3E	Ignition key illumination control	Ignition key illumination	Ignition switch off and driver-side door opened.	1.0 or less	• Ignition key illumination • Related wiring harnesses
			15 s or more after driver-side door closed.	B+	
3F	Power supply	A/C fuse	Ignition switch is ON position.	B+	• A/C fuse • Battery

Terminal	Signal name	Connected to	Measured condition	Voltage (V)/ Continuity	Inspection item(s)
3G	Power supply	D/L fuse	Under any condition	B+	• D/L fuse • Battery
3H	Headlight leveling (manual) GND	Headlight leveling switch	Under any condition: Inspect for continuity to headlight leveling switch.	Continuity detected	• Related wiring harnesses
3I	Power supply	METER fuse	Ignition switch is ON position.	B+	• METER fuse • Battery
3J	Power supply	ROOM fuse	Under any condition	B+	• ROOM fuse • Battery
3K	Back-up light switch signal	Car-navigation unit	Back-up light switch is ON	B+	• Related wiring harnesses
			Back-up light switch is OFF	1.0 or less	
3L	Power supply	METER fuse	Ignition switch is ON position.	B+	• METER fuse • Battery
4A	Power supply	SAS fuse	Ignition switch is ON position.	B+	• SAS fuse • Battery
4B	Power supply (headlight leveling switch)	Headlight leveling switch	TNS switch is ON.	B+	• Related wiring harnesses
4C	Turn switch input (LH)	Turn switch	Turn switch at left position	1.0 or less	• Turn switch • Related wiring harnesses
			Other	B+	
4D	Security light signal	Instrument cluster	Under any condition: Inspect for continuity to Instrument cluster.	Continuity detected	• Related wiring harnesses
4E	Turn switch input (RH)	Turn switch	Turn switch at right position	1.0 or less	• Turn switch • Related wiring harnesses
			Other	B+	
4F	Horn switch input	Horn switch	Horn switch is ON	1.0 or less	• Horn switch • Related wiring harnesses
			Other	B+	
4G	Hazard switch input	Hazard switch	Hazard switch at left position	1.0 or less	• Hazard switch • Related wiring harnesse
			Other	B+	
4H	Vehicle speed signal output	• Audio unit • Wiper switch (without auto wiper) • Auto light-off control module • Car-navigation unit	Under any condition: Inspect for continuity to related module.	Continuity detected	• Related wiring harnesses
4I	Rear wiper (INT) switch signal	Rear wiper switch	Rear wiper switch is INT position.	1.0 or less	• Rear wiper switch • Related wiring harnesses
			Rear wiper switch is OFF	B+	
4J	CAN_L	—	Because this terminal is for communication, good/no good judgment by terminal voltage is not possible.	—	• Related wiring harnesses
4K	Rear wiper switch signal	Rear wiper switch	Rear wiper switch is ON position.	1.0 or less	• Rear wiper switch • Related wiring harnesses
			Rear wiper switch is OFF	B+	
4L	CAN_H	—	Because this terminal is for communication, good/no good judgment by terminal voltage is not possible.	—	• Related wiring harnesses
4M	Door switch signal (driver-side) output	Instrument cluster	Door open (driver-side) (Door switch on)	1.0 or less	• Door switch (driver-side) • Related wiring harnesses
			Doors closed (driver-side) (Door switch off)	B+	
4N	DLC-2	DLC-2	Under any condition: Inspect for continuity to DLC-2.	Continuity detected	• Related wiring harnesse

Terminal	Signal name	Connected to	Measured condition	Voltage (V)/ Continuity	Inspection item(s)
4O	Door switch signal (except driver-side) output	Instrument cluster	Door open (except driver-side) (Door switch on)	1.0 or less	• Door switch (except driver-side) • Related wiring harnesses
			Doors closed (except driver-side) (Door switch off)	B+	
4P	Key reminder switch signal	• Steering lock unit (with advanced keyless system) • Ignition switch (with keyless entry system)	Key inserted	B+	• Steering lock unit (with advanced keyless system) • Ignition switch (with keyless entry system) • Related wiring harnesses
			Key removed	1.0 or less	
5A	Fuel level signal 2 input	Fuel gauge sender unit	Under any condition: Inspect for continuity to fuel gauge sender unit.	Continuity detected	• Related wiring harnesses
5B	Fuel level signal 1 input	Fuel gauge sender unit	Under any condition: Inspect for continuity to fuel gauge sender unit.	Continuity detected	• Related wiring harnesses
5C	Woofer signal 1	Audio amplifier	Under any condition: Inspect for continuity to audio amplifier.	Continuity detected	• Related wiring harnesses
5D	Woofer signal 2	Audio amplifier	Under any condition: Inspect for continuity to audio amplifier.	Continuity detected	• Related wiring harnesses
5E	Woofer GND	GND	Under any condition: Inspect for continuity to GND.	Continuity detected	• Related wiring harnesses
6A	Door unlock control	Door lock actuator	Door lock actuator unlocking	1.0 or less → B+ → 1.0 or less	• Door lock actuator • Related wiring harnesses
			Other	1.0 or less	
6B	Door lock control	Door lock actuator	Door lock actuator locking	1.0 or less → B+ → 1.0 or less	• Door lock actuator • Related wiring harnesses
			Other	1.0 or less	
6D	GND (headlight leveling switch)	GND	Under any condition: Inspect for continuity to GND.	Continuity detected	• Related wiring harnesses
6F	Courtesy light control	Courtesy light	**Within 5 min** after any door is opened.	1.0 or less	• Courtesy light • Related wiring harnesses
			5 min or more after any door is opened.	B+	
			All doors closed	B+	
6G	Driver-side door unlock control	Driver-side door lock actuator	Driver-side door lock actuator unlocking	1.0 or less → B+ → 1.0 or less	• Driver-side door lock actuator • Related wiring harnesses
			Other	1.0 or less	
6H	Courtesy light control	Courtesy light	**Within 5 min** after any door is opened.	1.0 or less	• Courtesy light • Related wiring harnesses
			5 min or more after any door is opened.	B+	
			All doors closed	B+	
6I	Power supply	• Position memory control module • Rain sensor • Power window main switch • 4WD control module	Ignition switch is ON position.	B+	• Related wiring harnesses
6J	Brake signal	Brake switch	Stop light switch is ON	B+	Brake switch
			Stop light switch is OFF	1.0 or less	

Terminal	Signal name	Connected to	Measured condition	Voltage (V)/ Continuity	Inspection item(s)
7A	Signal GND	GND	Under any condition: Inspect for continuity to GND.	Continuity detected	• Related wiring harnesses
7B	Door switch signal (driver-side)	Door switch (driver-side)	Door open (driver-side) (Door switch on)	1.0 or less	• Door switch (driver-side) • Related wiring harnesses
			Doors closed (driver-side) (Door switch off)	B+	
7C	Lock input (Driver-side door lock-link switch)	Driver-side door lock-link switch	Driver-side door locked	1.0 or less	• Driver-side door lock-link switch • Related wiring harnesses
			Driver-side door unlocked	5	
7D	Door switch signal (RR)	Door switch (RR)	Door open (RR) (Door switch on)	1.0 or less	• Door switch (RR) • Related wiring harnesses
			Doors closed (RR) (Door switch off)	B+	
7E	Unlock input (Driver-side door lock-link switch)	Driver-side door lock-link switch	Driver-side door locked	5	• Driver-side door lock-link switch • Related wiring harnesses
			Driver-side door unlocked	1.0 or less	
7F	Door switch signal (passenger-side)	Door switch (passenger-side)	Door open (passenger-side) (Door switch on)	1.0 or less	• Door switch (passenger-side) • Related wiring harnesses
			Doors closed (passenger-side) (Door switch off)	B+	
7G	Unlock input (except driver-side door lock-link switch)	Driver-side door lock-link switch	Except driver-side door locked	5	• Except driver-side door lock-link switch • Related wiring harnesses
			Except driver-side door unlocked	1.0 or less	
7H	Key reminder switch signal output	Keyless control module (with advanced keyless system)	Key inserted	B+	• Related wiring harnesses
			Key removed	1.0 or less	
7I	Keyless control module communication	Keyless control module	Under any condition: Inspect for continuity to keyless control module.	Continuity detected	• Related wiring harnesses
7J	Lock/unlock input	Driver-side door key cylinder switch	At the moment key cylinder is locked	2.5	• Driver-side door key cylinder switch • Related wiring harnesses
			At the moment key cylinder is unlocked	1.0 or less	
			At the moment key cylinder is neutral position	5	
7M	Lock/unlock input	Door lock switch	Door lock switch is pressed to lock.	2.5	• Door lock switch • Related wiring harnesses
			Door lock switch is pressed to unlock.	1.0 or less	
			Other	5	
7N	SAS control module signal	SAS control module	Under any condition: Inspect for continuity to SAS control module.	Continuity detected	• Related wiring harnesses
7O	Power window main switch communication	Power window main switch	Under any condition: Inspect for continuity to power window main switch.	Continuity detected	• Related wiring harnesses
7P	CAN_H	—	Because this terminal is for communication, good/no good judgment by terminal voltage is not possible.	—	• Related wiring harnesses
7R	CAN_L	—	Because this terminal is for communication, good/no good judgment by terminal voltage is not possible.	—	• Related wiring harnesses
7U	Power supply	SAS control module	Ignition switch is ON position.	B+	• Related wiring harnesses

Terminal	Signal name	Connected to	Measured condition	Voltage (V)/ Continuity	Inspection item(s)
8A	Power GND	GND	Under any condition: Inspect for continuity to GND.	Continuity detected	• Related wiring harnesses
8B	Power supply	• Auto leveling control module • TCM • Back-up light switch • Cooling fan relay • HO2S (rear)	Ignition switch is ON position.	B+	• Related wiring harnesses
8C	Brake signal output	PCM	Stop light switch is ON	B+	• Brake switch • Related wiring harnesses
			Stop light switch is OFF	1.0 or less	
8F	Power supply	ABS/TCS HU/CM	Ignition switch is ON position.	B+	• Related wiring harnesses
8H	Front turn light (RH) control	Front turn light (RH)	Turn switch (RH) is ON	Alternates between 1.0 or less and B+	• Front turn light (RH) • Related wiring harnesses
			Turn switch is OFF	1.0 or less	
8J	Front turn light (LH) control	Front turn light (LH)	Turn switch (LH) is ON	Alternates between 1.0 or less and B+	• Front turn light (LH) • Related wiring harnesses
			Turn switch is OFF	1.0 or less	
8K	Power supply	HAZARD fuse	Under any condition	B+	• HAZARD fuse • Battery
8L	Power supply	A/C relay	Ignition switch is ON position.	B+	• Related wiring harnesses
8M	Hood switch signal	Hood switch	Hood open (Hood switch off)	B+	• Hood switch • Related wiring harnesses
			Hood closed (Hood switch on)	1.0 or less	
8N	Rear washer motor control	Rear washer motor	Rear washer switch is ON	1.0 or less	• Rear washer switch • Rear washer motor • Related wiring harnesses
			Rear washer switch is OFF	B+	
8P	Back-up light switch signal	• Back-up light switch (MTX) • TR switch (ATX)	Shift to reverse	B+	• Back-up light switch (MTX) • TR switch (ATX) • Related wiring harnesses
			Other	1.0 or less	
9A	CAN_L	—	Because this terminal is for communication, good/no good judgment by terminal voltage is not possible.	—	• Related wiring harnesses
9B	Vehicle speed signal input	ABS/TCS HU/CM	Under any condition: Inspect for continuity to ABS/TCS HU/CM.	Continuity detected	• Related wiring harnesses
9C	CAN_L	—	Because this terminal is for communication, good/no good judgment by terminal voltage is not possible.	—	• Related wiring harnesses
9D	CAN_L	—	Because this terminal is for communication, good/no good judgment by terminal voltage is not possible.	—	• Related wiring harnesses
9E	CAN_H	—	Because this terminal is for communication, good/no good judgment by terminal voltage is not possible.	—	• Related wiring harnesses
9F	CAN_H	—	Because this terminal is for communication, good/no good judgment by terminal voltage is not possible.	—	• Related wiring harnesses

Terminal	Signal name	Connected to	Measured condition	Voltage (V)/ Continuity	Inspection item(s)
9G	CAN_H	—	Because this terminal is for communication, good/no good judgment by terminal voltage is not possible.	—	• Related wiring harnesse
9H	DLC-2	DLC-2	Under any condition: Inspect for continuity to Check connector.	Continuity detected	• Related wiring harnesses
9J	Horn switch input	Horn relay	Horn switch is ON	1.0 or less	• Horn relay • Related wiring harnesses
			Other	B+	
9K	Power supply (headlight leveling switch)	Headlight leveling switch	TNS switch is ON.	B+	• Related wiring harnesses
9L	Security light signal	PCM	Under any condition: Inspect for continuity to PCM.	Continuity detected	• Related wiring harnesses

*1 : 5HB, WGN only
*2 : With immobilizer system

09–50 TECHNICAL DATA

BODY ELECTRICAL SYSTEM 09–50–1

BODY ELECTRICAL SYSTEM

E6U095000000W01

Item				Specifications
Exterior light bulb capacity (W)	Headlight	Low-beam		55 × 2
		High-beam		55 × 2
	Parking light			5 × 2
	Front fog light			55 × 2
	Front turn light			28 × 2
	Front side marker light			5 × 2
	Brake light/taillight			21/5 × 2
	Rear turn light			21 × 2
	Back-up light			18.4 × 2
	Taillight			5 × 2
	License plate light			5 × 2
	High-mount brake light	Sport Sedan, Sport Wagon	In-vehicle-type	18.4 × 1
			Rear spoiler type	4 (LED)
		5-Door		21 × 1
Interior light bulb capacity (W)	Front map light			5 × 2
	Rear map light			5 × 2
	Trunk compartment light			3 × 1
	Courtesy light			5 × 2
	Vanity mirror illumination			1.2 × 2
	Ignition key illumination			1.4 × 1
	Ashtray illumination			1.4 × 1
	Glove compartment light			1.7 × 1
	Cargo compartment light		5-Door	5 × 1
			Sport Wagon	10 × 1

09–60 SERVICE TOOLS

BODY & ACCESSORIES SST 09–60–1

BODY & ACCESSORIES SST

E6U096000000W01

49 0305 870A Window Tool Set 	49 N088 0A0 Fuel & Thermometer Checker 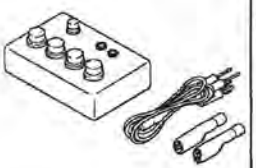	418-FS475 WDS 

ALPHABETICAL INDEX

AI SECTION

A

A/C COMPRESSOR REMOVAL/INSTALLATION [L3 WITH TC] 07-11-16
A/C COMPRESSOR REMOVAL/INSTALLATION [L3, AJ] 07-11-15
A/C UNIT DISASSEMBLY/ASSEMBLY [L3 WITH TC] 07-11-10
A/C UNIT DISASSEMBLY/ASSEMBLY [L3, AJ] 07-11-8
A/C UNIT REMOVAL/INSTALLATION [L3 WITH TC] 07-11-7
A/C UNIT REMOVAL/INSTALLATION [L3, AJ] 07-11-5
A/C WATER TEMPERATURE SENSOR INSPECTION [L3 WITH TC] 07-40-27
A/C WATER TEMPERATURE SENSOR REMOVAL/INSTALLATION [L3 WITH TC] 07-40-25
ABBREVIATIONS [GENERAL INFORMATION] 00-00-33
ABS WHEEL-SPEED SENSOR (FRONT) REMOVAL/INSTALLATION 04-13-8
ABS WHEEL-SPEED SENSOR (REAR) REMOVAL/INSTALLATION 04-13-10
ABS WHEEL-SPEED SENSOR REMOVAL/INSTALLATION 04-15-11
ABS/TCS HU/CM 09-02A-5
ABS/TCS HU/CM CONFIGURATION 04-13-6
ABS/TCS HU/CM INSPECTION 04-13-6
ABS/TCS HU/CM REMOVAL/INSTALLATION 04-13-4
ABS/TCS HU/CM SYSTEM INSPECTION 04-13-3
ABS/TCS LOCATION INDEX 04-13-1
ABS/TCS ON-BOARD DIAGNOSIS 04-02A-2
ABS/TCS SYSTEM WIRING DIAGRAM [ABS] 04-13-2
ABS/TCS SYSTEM WIRING DIAGRAM [ON-BOARD DIAGNOSTIC] 04-02A-2
ABS/TCS SYSTEM WIRING DIAGRAM [SYMPTOM TROUBLESHOOTING] 04-03A-2
ACCELERATOR PEDAL POSITION (APP) SENSOR INSPECTION [AJ] 01-40C-26
ACCELERATOR PEDAL POSITION (APP) SENSOR INSPECTION [L3 WITH TC] 01-40B-26
ACCELERATOR PEDAL POSITION (APP) SENSOR INSPECTION [L3] 01-40A-29
ACCELERATOR PEDAL REMOVAL/INSTALLATION [AJ] 01-13C-7
ACCELERATOR PEDAL REMOVAL/INSTALLATION [L3 WITH TC] 01-13B-15
ACCELERATOR PEDAL REMOVAL/INSTALLATION [L3] 01-13A-10
ACCESSORY SOCKET INSPECTION 09-20-19
ACCESSORY SOCKET REMOVAL/INSTALLATION 09-20-18
ADVANCED KEYLESS SYSTEM STRUCTURAL VIEW 09-02C-2
Advisory Messages [GENERAL INFORMATION] 00-00-5
AFTER REPAIR PROCEDURE [AJ] 01-02C-7
AFTER REPAIR PROCEDURE [AW6A-EL] 05-02B-4
AFTER REPAIR PROCEDURE [FS5A-EL] 05-02A-4
AFTER REPAIR PROCEDURE [FUEL SYSTEM(L3 WITH TC)] 01-14B-5
AFTER REPAIR PROCEDURE [L3, AJ] 01-14A-6
AFTER REPAIR PROCEDURE [L3] 01-02A-12
AFTER REPAIR PROCEDURE [ON-BOARD DIAGNOSTIC SYSTEM (L3 WITH TC)] 01-02B-8
AIR BAG MODULE AND PRE-TENSIONER SEAT BELT DEPLOYMENT PROCEDURES 08-10-18
AIR BAG MODULE AND PRE-TENSIONER SEAT BELT DISPOSAL PROCEDURES 08-10-34
Air Bag Module Inspection 08-10-3
AIR BAG SYSTEM 08-03-1
Air Bag System Component Disassembly 08-10-5
AIR BAG SYSTEM LOCATION INDEX 08-10-2
AIR BAG SYSTEM WIRING DIAGRAM 08-02-5
AIR BLEEDING [L3 WITH TC] 04-11-4
AIR BLEEDING [L3, AJ] 04-11-4
AIR BLEEDING [STEERING] 06-12-3
AIR BYPASS VALVE INSPECTION [L3 WITH TC] 01-13B-11
AIR CLEANER ELEMENT INSPECTION [AJ] 01-13C-4
AIR CLEANER ELEMENT INSPECTION [L3 WITH TC] 01-13B-11
AIR CLEANER ELEMENT INSPECTION [L3] 01-13A-5
AIR FILTER INSPECTION [HVAC] 07-11-12
AIR FILTER INSPECTION [L3 WITH TC] 01-16B-8
AIR FILTER INSPECTION [L3, AJ] 01-16A-10
AIR FILTER REMOVAL/INSTALLATION [HVAC] 07-11-12
AIR INTAKE ACTUATOR INSPECTION [L3 WITH TC] 07-40-7
AIR INTAKE ACTUATOR INSPECTION [L3, AJ] 07-40-7
AIR INTAKE ACTUATOR REMOVAL/INSTALLATION [L3 WITH TC] 07-40-6
AIR INTAKE ACTUATOR REMOVAL/INSTALLATION [L3, AJ] 07-40-6
AIR MIX ACTUATOR INSPECTION [L3 WITH TC] 07-40-10
AIR MIX ACTUATOR INSPECTION [L3, AJ] 07-40-9
AIR MIX ACTUATOR REMOVAL/INSTALLATION [L3 WITH TC] 07-40-8

AIR MIX ACTUATOR REMOVAL/INSTALLATION [L3, AJ] 07-40-8
AIRFLOW MODE ACTUATOR INSPECTION [L3 WITH TC] 07-40-13
AIRFLOW MODE ACTUATOR INSPECTION [L3, AJ] 07-40-11
AIRFLOW MODE ACTUATOR REMOVAL/INSTALLATION [L3 WITH TC] 07-40-11
AIRFLOW MODE ACTUATOR REMOVAL/INSTALLATION [L3, AJ] 07-40-10
ALR 08-11-7
AMBIENT TEMPERATURE SENSOR INSPECTION [L3 WITH TC] 07-40-22
AMBIENT TEMPERATURE SENSOR INSPECTION[L3, AJ] 07-40-22
AMBIENT TEMPERATURE SENSOR REMOVAL/INSTALLATION 07-40-21
ANTENNA FEEDER (FRONT) INSPECTION 09-20-16
ANTENNA FEEDER (REAR) INSPECTION [SPORT WAGON] 09-20-18
ANTENNA FEEDER (REAR/REAR) INSPECTION [5-DOOR] 09-20-17
ANTENNA FEEDER LOCATION [5-DOOR] 09-20-15
ANTENNA FEEDER LOCATION [SPORT SEDAN] 09-20-15
ANTENNA FEEDER LOCATION [SPORT WAGON] 09-20-16
A-PILLAR TRIM REMOVAL/INSTALLATION 09-17-10
ARM (REAR) INSPECTION 02-13-18
ARM (REAR) REMOVAL/INSTALLATION 02-13-15
ASHTRAY ILLUMINATION BULB REMOVAL/INSTALLATION 09-18-31
ASSIST HANDLE REMOVAL/INSTALLATION 09-17-26
AUDIO AMPLIFIER REMOVAL/INSTALLATION 09-20-8
AUDIO CD [REFERENCE] 09-03C-37
AUDIO CONTROL SWITCH INSPECTION 09-20-8
AUDIO CONTROL SWITCH REMOVAL/INSTALLATION 09-20-7
AUDIO UNIT DISASSEMBLY/ASSEMBLY 09-20-6
AUTO LIGHT-OFF CONTROL MODULE INSPECTION 09-18-25
AUTO LIGHT-OFF CONTROL MODULE REMOVAL/INSTALLATION 09-18-23
AUTO-DIMMING MIRROR INSPECTION 09-12-30
AUTOMATIC TRANSAXLE [AW6A-EL] TECHNICAL DATA 05-50-3
AUTOMATIC TRANSAXLE [FS5A-EL] TECHNICAL DATA 05-50-1
AUTOMATIC TRANSAXLE CONTROL SYSTEM WIRING DIAGRAM [ON-BOARD DIAGNOSTIC (AW6A-EL)] 05-02B-2
AUTOMATIC TRANSAXLE CONTROL SYSTEM WIRING DIAGRAM [ON-BOARD DIAGNOSTIC (FS5A-EL)] 05-02A-2
AUTOMATIC TRANSAXLE CONTROL SYSTEM WIRING DIAGRAM [SYMPTOM TROUBLESHOOTING (AW6A-EL)] 05-03B-2
AUTOMATIC TRANSAXLE CONTROL SYSTEM WIRING DIAGRAM [SYMPTOM TROUBLESHOOTING (FS5A-EL)] 05-03A-2
Automatic Transaxle Fluid (ATF) Condition Inspection [AW6A-EL] 05-17B-11
Automatic Transaxle Fluid (ATF) Condition Inspection [FS5A-EL] 05-17A-1
AUTOMATIC TRANSAXLE FLUID (ATF) INSPECTION [AW6A-EL] 05-17B-11
AUTOMATIC TRANSAXLE FLUID (ATF) INSPECTION [FS5A-EL] 05-17A-10
Automatic Transaxle Fluid (ATF) Level Inspection [AW6A-EL] 05-17B-12
Automatic Transaxle Fluid (ATF) Level Inspection [FS5A-EL] 05-17A-11
AUTOMATIC TRANSAXLE FLUID (ATF) REPLACEMENT [AW6A-EL] 05-17B-12
AUTOMATIC TRANSAXLE FLUID (ATF) REPLACEMENT [FS5A-EL] 05-17A-12
AUTOMATIC TRANSAXLE LOCATION INDEX [AW6A-EL] 05-17B-2
AUTOMATIC TRANSAXLE LOCATION INDEX [FS5A-EL] 05-17A-3
AUTOMATIC TRANSAXLE ON-BOARD DIAGNOSTIC FUNCTION [AW6A-EL] 05-02B-3
AUTOMATIC TRANSAXLE ON-BOARD DIAGNOSTIC FUNCTION [FS5A-EL] 05-02A-3
AUTOMATIC TRANSAXLE REMOVAL/INSTALLATION [AW6A-EL] 05-17B-30
AUTOMATIC TRANSAXLE REMOVAL/INSTALLATION [FS5A-EL] 05-17A-39
AUTOMATIC TRANSAXLE SHIFT MECHANISM LOCATION INDEX 05-18
AWD CONTROL MODULE INSPECTION 03-19
AWD CONTROL MODULE REMOVAL/INSTALLATION 03-19-4
AWD SOLENOID INSPECTION 03-19-3
AXLE (FRONT) LOCATION INDEX 03-11-1
AXLE (REAR) LOCATION INDEX 03-12-1
AXLE SERVICE TOOLS 03-60-1

B

BACK-UP LIGHT SWITCH INSPECTION 09-18-19
BACK-UP LIGHT SWITCH REMOVAL/INSTALLATION [G35M-R] 09-18-19
BACK-UP LIGHT SWITCH REMOVAL/INSTALLATION [L3 WITH TC] 09-18-19
BAROMETRIC PRESSURE (BARO) SENSOR INSPECTION [L3 WITH TC] 01-40B-34
BASE INSTALLATION [MIRROR] 09-12-31
BASE REMOVAL [MIRROR] 09-12-30
BASIC INSPECTION [AW6A-EL] 05-03B-4
BASIC INSPECTION [FS5A-EL] 05-03A-4
BASIC POWER WINDOW SYSTEM INSPECTION 09-03A-5
BASIC SYSTEM LOCATION INDEX [L3 WITH TC] 07-11-2
BASIC SYSTEM LOCATION INDEX [L3, AJ] 07-11-2
BATTERY INSPECTION [L3 WITH TC] 01-17B-2
BATTERY INSPECTION [L3, AJ] 01-17A-2

BATTERY RECHARGING
[L3 WITH TC] 01-17B-4
BATTERY RECHARGING [L3, AJ] 01-17A-3
BATTERY REMOVAL/INSTALLATION
[L3 WITH TC] 01-17B-2
BATTERY REMOVAL/INSTALLATION
[L3, AJ] 01-17A-1
BCM SELF-TEST 09-02G-16
BEFORE REPAIR PROCEDURE
[L3 WITH TC] 01-14B-4
BEFORE REPAIR PROCEDURE
[L3, AJ] 01-14A-6
BELTLINE MOLDING (FRONT)
INSTALLATION 09-16-9
BELTLINE MOLDING (FRONT)
REMOVAL 09-16-9
BELTLINE MOLDING (REAR)
INSTALLATION 09-16-10
BELTLINE MOLDING (REAR)
REMOVAL 09-16-10
BLOWER MOTOR INSPECTION 07-40-14
BLOWER MOTOR
REMOVAL/INSTALLATION 07-40-14
BLOWER UNIT DISASSEMBLY/ASSEMBLY
[L3 WITH TC] 07-11-5
BLOWER UNIT REMOVAL/INSTALLATION
[L3 WITH TC] 07-11-3
BODY & ACCESSORIES SERVICE TOOLS 09-60-1
BODY CONTROL MODULE (BCM)
INSPECTION 09-40-2
BODY CONTROL MODULE (BCM)
REMOVAL/INSTALLATION 09-40-1
BODY ELECTRICAL SYSTEM
TECHNICAL DATA 09-50-1
BOOST AIR TEMPERATURE SENSOR
INSPECTION [L3 WITH TC] 01-40B-32
BOX (CENTER) REMOVAL/INSTALLATION 09-17-9
B-PILLAR LOWER TRIM
REMOVAL/INSTALLATION 09-17-10
B-PILLAR UPPER TRIM
REMOVAL/INSTALLATION 09-17-11
BRAKE (DISC) (FRONT) INSPECTION 04-11-16
BRAKE (DISC) (FRONT)
REMOVAL/INSTALLATION [L3 WITH TC] 04-11-20
BRAKE (DISC) (FRONT)
REMOVAL/INSTALLATION[L3, AJ] 04-11-19
BRAKE (DISC) (REAR) INSPECTION 04-11-26
BRAKE (DISC) (REAR)
REMOVAL/INSTALLATION 04-11-29
BRAKE FLUID LEVEL
SENSOR INSPECTION 04-11-12
Brake Pedal Height Adjustment 04-11-6
Brake Pedal Height Inspection 04-11-6
BRAKE PEDAL INSPECTION 04-11-6
Brake Pedal Play Adjustment 04-11-7
Brake Pedal Play Inspection 04-11-6
BRAKE PEDAL REMOVAL/INSTALLATION 04-11-8
BRAKE SWITCH INSPECTION 04-11-9
BRAKES SERVICE TOOLS 04-60-1
BRAKES TECHNICAL DATA 04-50-1
BUCKLE REMOVAL/INSTALLATION 08-11-6
BUCKLE SWITCH INSPECTION 08-11-8
BUMPER (FRONT) DISASSEMBLY/ASSEMBLY
[EXCEPT L3 WITH TC] 09-10-11
BUMPER (FRONT) DISASSEMBLY/ASSEMBLY
[L3 WITH TC] 09-10-12
BUMPER (FRONT)
REMOVAL/INSTALLATION 09-10-10
BUMPER (REAR) DISASSEMBLY/ASSEMBLY
[L3 WITH TC] 09-10-15
BUMPER (REAR)
REMOVAL/INSTALLATION 09-10-13
BUMPER REINFORCEMENT (FRONT)
REMOVAL/INSTALLATION 09-10-13
BUMPER REINFORCEMENT (REAR)
REMOVAL/INSTALLATION 09-10-16
Button Inspection 09-02D-6

C

CALIPER (FRONT) DISASSEMBLY/ASSEMBLY
[L3 WITH TC] 04-11-25
CALIPER (FRONT) DISASSEMBLY/ASSEMBLY
[L3, AJ] 04-11-24
CALIPER (REAR)
DISASSEMBLY/ASSEMBLY 04-11-31
Camber Adjustment 02-11-4
CAMSHAFT POSITION (CMP)
SENSOR INSPECTION [AJ] 01-40C-39
CAMSHAFT POSITION (CMP)
SENSOR INSPECTION [L3 WITH TC] 01-40B-36
CAMSHAFT POSITION (CMP)
SENSORINSPECTION [L3] 01-40A-48
CAMSHAFT POSITION (CMP) SENSOR
REMOVAL/INSTALLATION [AJ] 01-40C-39
CAMSHAFT POSITION (CMP) SENSOR
REMOVAL/INSTALLATION [L3 WITH TC] 01-40B-38
CAMSHAFT POSITION (CMP) SENSOR
REMOVAL/INSTALLATION [L3] 01-40A-47
CARD KEY BATTERY REPLACEMENT
[WITH ADVANCED KEYLESS SYSTEM] 09-14-22
CARD KEY ID CODE REGISTRATION
[WITH ADVANCED KEYLESS SYSTEM] 09-14-15
CARGO COMPARTMENT LIGHT INSPECTION
[5-DOOR, SPORT WAGON] 09-18-30
CARGO COMPARTMENT LIGHT
REMOVAL/INSTALLATION
[5-DOOR, SPORT WAGON] 09-18-29
CARGO COMPARTMENT LIGHT
SWITCH INSPECTION
[5-DOOR, SPORT WAGON] 09-18-31
CAR-NAVIGATION SYSTEM 09-03D-1
CAR-NAVIGATION UNIT
REMOVAL/INSTALLATION 09-20-6
CENTER BOX
REMOVAL/INSTALLATION 09-17-9
CENTER PANEL UNIT
DISASSEMBLY/ASSEMBLY 09-20-5
CENTER PANEL UNIT
REMOVAL/INSTALLATION 09-20-4
CENTER ROOF ANTENNA INSPECTION 09-20-14
CENTER ROOF ANTENNA
REMOVAL/INSTALLATION 09-20-14
CENTER SEAT BELT (REAR)
REMOVAL/INSTALLATION 08-11-5
CHARCOAL CANISTER INSPECTION
[L3 WITH TC] 01-16B-8

AI

CHARCOAL CANISTER INSPECTION [L3, AJ] 01-16A-10
CHARGE AIR COOLER INSPECTION [L3 WITH TC] 01-13B-11
CHARGING SYSTEM LOCATION INDEX [L3 WITH TC] 01-17B-1
CHECK VALVE INSPECTION [L3 WITH TC] 01-16B-11
CHILD-RESTRAINT SEAT ANCHOR REMOVAL/INSTALLATION 08-11-8
CLEARING CARD KEY 09-14-16
CLIMATE CONTROL UNIT DISASSEMBLY/ASSEMBLY [L3 WITH TC] 07-40-32
CLIMATE CONTROL UNIT DISASSEMBLY/ASSEMBLY [L3, AJ] 07-40-31
CLIMATE CONTROL UNIT INSPECTION [L3 WITH TC] 07-40-39
CLIMATE CONTROL UNIT INSPECTION [L3, AJ] 07-40-33
CLIMATE CONTROL UNIT INSTALLATION [L3, AJ] 07-40-30
CLIMATE CONTROL UNIT REMOVAL [L3, AJ] 07-40-30
CLIMATE CONTROL UNIT REMOVAL/INSTALLATION [L3 WITH TC] 07-40-31
CLIMATE CONTROL UNIT WIRE ADJUSTMENT 07-40-32
CLOCK SPRING ADJUSTMENT 08-10-16
CLOCK SPRING INSPECTION 08-10-17
CLOCK SPRING REMOVAL/INSTALLATION 08-10-15
CLUTCH COVER INSPECTION [A26MX-R] 05-10-30
CLUTCH COVER INSPECTION [G35M-R, A65M-R] 05-10-29
CLUTCH DISC INSPECTION 05-10-31
CLUTCH FLUID AIR BLEEDING/REPLACEMENT 05-10-3
CLUTCH FLUID INSPECTION 05-10-3
CLUTCH LOCATION INDEX 05-10-2
CLUTCH MASTER CYLINDER DISASSEMBLY/ASSEMBLY [A26MX-R] 05-10-13
CLUTCH MASTER CYLINDER DISASSEMBLY/ASSEMBLY [G35M-R, A65M-R] 05-10-12
CLUTCH MASTER CYLINDER REMOVAL/INSTALLATION [A26MX-R] 05-10-11
CLUTCH MASTER CYLINDER REMOVAL/INSTALLATION [G35M-R, A65M-R] 05-10-10
CLUTCH PEDAL ADJUSTMENT 05-10-5
Clutch Pedal Disengagement Point 05-10-6
Clutch Pedal Free Play 05-10-5
Clutch Pedal Free Play Inspection 05-10-4
Clutch Pedal Height 05-10-5
Clutch Pedal Height Inspection 05-10-4
CLUTCH PEDAL INSPECTION 05-10-4
CLUTCH PEDAL POSITION (CPP) SWITCH INSPECTION [AJ] 01-40C-23
CLUTCH PEDAL POSITION (CPP) SWITCH INSPECTION [L3 WITH TC] 01-40B-22
CLUTCH PEDAL POSITION (CPP) SWITCH INSPECTION [L3] 01-40A-25
CLUTCH PEDAL REMOVAL/INSTALLATION [A26MX-R] 05-10-
CLUTCH PEDAL REMOVAL/INSTALLATION [G35M-R, A65M-R] 05-10-7
Clutch Pipe Removal/Installation 05-10-3
CLUTCH RELEASE COLLAR INSPECTION 05-10-31
CLUTCH RELEASE CYLINDER DISASSEMBLY/ASSEMBLY [A26MX-R] 05-10-18
CLUTCH RELEASE CYLINDER DISASSEMBLY/ASSEMBLY [G35M-R, A65M-R] 05-10-17
CLUTCH RELEASE CYLINDER REMOVAL/INSTALLATION [A26MX-R] 05-10-16
CLUTCH RELEASE CYLINDER REMOVAL/INSTALLATION [G35M-R, A65M-R] 05-10-14
CLUTCH TECHNICAL DATA 05-50-1
CLUTCH UNIT REMOVAL/INSTALLATION [A26MX-R] 05-10-25
CLUTCH UNIT REMOVAL/INSTALLATION [G35M-R, A65M-R] 05-10-19
COIL REMOVAL/INSTALLATION 09-14-28
COIL SPRING (REAR) REMOVAL/INSTALLATION 02-14-5
COLUMN COVER REMOVAL/INSTALLATION 09-17-6
COMBINATION LIGHT (FRONT) REMOVAL/INSTALLATION 09-18-8
COMBINATION LIGHT (REAR) REMOVAL/INSTALLATION 09-18-
COMBINATION LIGHT BULB (REAR) REMOVAL/INSTALLATION [5-DOOR, SPORT WAGON] 09-18-15
COMBINATION SWITCH DISASSEMBLY/ASSEMBLY 09-18-20
COMBINATION SWITCH REMOVAL/INSTALLATION 09-18-19
COMBINED SENSOR INITIALIZATION PROCEDURE 04-15-14
COMBINED SENSOR INSPECTION 04-15-12
COMBINED SENSOR REMOVAL/INSTALLATION 04-15-12
COMPRESSION INSPECTION [AJ] 01-10C-6
COMPRESSION INSPECTION [L3 WITH TC] 01-10B-9
COMPRESSION INSPECTION [L3] 01-10A-4
CONDENSER INSPECTION [HVAC] 07-11-18
CONDENSER REMOVAL/INSTALLATION [5-DOOR] 09-20-13
CONDENSER REMOVAL/INSTALLATION [L3 WITH TC] 07-11-18
CONDENSER REMOVAL/INSTALLATION [L3, AJ] 07-11-17
CONDENSER REMOVAL/INSTALLATION [SPORT SEDAN] 09-20-13
CONDENSER REMOVAL/INSTALLATION [SPORT WAGON] 09-20-13
CONFIRMATION STEP 1: AUDIO PANEL SWITCH CONFIRMATION 09-03C
CONFIRMATION STEP 1: RECEPTION CONDITION SYMPTOM (EXAMPLE) 09-03C-28

CONFIRMATION STEP 2: ANTENNA SYSTEM SYMPTOM (EXAMPLE) 09-03C-28
CONFIRMATION STEP 2: AUDIO CONTROL SWITCH CONFIRMATION 09-03C-4
CONFIRMATION STEP 3: ANTENNA SYSTEM SIMPLE INSPECTION 09-03C-28
CONSOLE DISASSEMBLY/ASSEMBLY 09-17-9
CONSOLE REMOVAL/INSTALLATION 09-17-8
CONTROL SYSTEM COMPONENT LOCATION INDEX [AJ] 01-40C-2
CONTROL SYSTEM COMPONENT LOCATION INDEX [L3 WITH TC]. 01-40B-2
CONTROL SYSTEM COMPONENT LOCATION INDEX [L3]. 01-40A-2
CONTROL SYSTEM DEVICE AND CONTROL RELATIONSHIP CHART [AJ]. 01-03C-3
CONTROL SYSTEM DEVICE AND CONTROL RELATIONSHIP CHART [L3 WITH TC] 01-03B-4
CONTROL SYSTEM DEVICE AND CONTROL RELATIONSHIP CHART [L3] 01-03A-6
CONTROL SYSTEM DIAGRAM [AJ]. 01-40C-3
CONTROL SYSTEM DIAGRAM [L3 WITH TC] 01-40B-3
CONTROL SYSTEM DIAGRAM [L3]. 01-40A-3
CONTROL SYSTEM LOCATION INDEX. 09-40-1
CONTROL SYSTEM LOCATION INDEX [L3 WITH TC] 07-40-5
CONTROL SYSTEM LOCATION INDEX [L3, AJ] 07-40-3
CONTROL SYSTEM WIRING DIAGRAM [CONTROL SYSTEM (AJ)]. 01-40C-4
CONTROL SYSTEM WIRING DIAGRAM L3 WITH TC] 01-40B-4
CONTROL SYSTEM WIRING DIAGRAM [L3] 01-40A-5
CONTROL SYSTEM WIRING DIAGRAM [ON-BOARD DIAGNOSTIC (AJ)] 01-02C-3
CONTROL VALVE BODY REMOVAL/INSTALLATION [AW6A-EL] 05-17B-39
CONVENTIONAL BRAKE LOCATION INDEX [L3 WITH TC] 04-11-3
CONVENTIONAL BRAKE LOCATION INDEX [L3, AJ] 04-11-2
Conversion to SI Units (Système International d'Unités)[GENERAL INFORMATION]. 00-00-12
COOLING FAN MOTOR INSPECTION [L3 WITH TC] 01-12B-10
COOLING FAN MOTOR INSPECTION [L3, AJ] 01-12A-14
COOLING FAN REMOVAL/INSTALLATION [L3 WITH TC] 01-12B-8
COOLING FAN REMOVAL/INSTALLATION [L3, AJ] 01-12A-12
COOLING SYSTEM CAP INSPECTION [L3 WITH TC] 01-12B-5
COOLING SYSTEM CAP INSPECTION [L3, AJ] 01-12A-7
COOLING SYSTEM LOCATION INDEX [L3 WITH TC] 01-12B-1
COOLING SYSTEM LOCATION INDEX [L3, AJ] 01-12A-2
COOLING SYSTEM SERVICE WARNINGS [L3 WITH TC] 01-12B-2
COOLING SYSTEM SERVICE WARNINGS [L3, AJ] 01-12A-3
COUPLING COMPONENT ASSEMBLY 03-19-9
COUPLING COMPONENT DISASSEMBLY 03-19-6
COUPLING COMPONENT REMOVAL/INSTALLATION 03-19-5
COURTESY LIGHT BULB REMOVAL/INSTALLATION 09-18-33
COWL GRILLE REMOVAL/INSTALLATION [EXCEPT L3 WITH TC]. 09-16-4
COWL GRILLE REMOVAL/INSTALLATION [L3 WITH TC] 09-16-4
COWL PANEL REMOVAL/INSTALLATION. 09-10-17
C-PILLAR TRIM REMOVAL/INSTALLATION 09-17-14
CRANKSHAFT POSITION (CKP) SENSOR INSPECTION [AJ]. 01-40C-41
CRANKSHAFT POSITION (CKP) SENSOR INSPECTION [L3 WITH TC]. 01-40B-38
CRANKSHAFT POSITION (CKP) SENSOR INSPECTION [L3]. 01-40A-46
CRANKSHAFT POSITION (CKP) SENSOR REMOVAL/INSTALLATION [AJ] 01-40C-40
CRANKSHAFT POSITION (CKP) SENSOR REMOVAL/INSTALLATION [L3 WITH TC] 01-40B-41
CRANKSHAFT POSITION (CKP) SENSOR REMOVAL/INSTALLATION [L3] 01-40A-45
CRASH ZONE SENSOR REMOVAL/INSTALLATION 08-10-11
CROSSMEMBER (FRONT) REMOVAL/INSTALLATION 02-13-20
CROSSMEMBER (REAR) REMOVAL/INSTALLATION 02-14-18
CROSSMEMBER (REAR) REMOVAL/INSTALLATION [AWD] 02-14-21
CRUISE CONTROL SWITCH INSPECTION [L3 WITH TC] 01-20B-1
CRUISE CONTROL SWITCH INSPECTION [L3, AJ] 01-20A-1
CURTAIN AIR BAG MODULE REMOVAL/INSTALLATION 08-10-10
CUSTOMIZED FUNCTION SETTING PROCEDURE. 09-14-18
CYLINDER HEAD GASKET REPLACEMENT [AJ] 01-10C-24
CYLINDER HEAD GASKET REPLACEMENT [L3 WITH TC] 01-10B-21
CYLINDER HEAD GASKET REPLACEMENT [L3] 01-10A-18

D

D Range Test [AW6A-EL] 05-17B-8
D Range Test [FS5A-EL] 05-17A-8
DASHBOARD DISASSEMBLY/ASSEMBLY 09-17-5
DASHBOARD REMOVAL/INSTALLATION 09-17-4
DEFLECTOR REMOVAL/INSTALLATION 09-15-3
DIAGNOSTIC ASSIST FUNCTION [AUDIO]. 09-02D-5
DIAGNOSTIC MONITORING TEST RESULTS [AJ] 01-02C-12
DIAGNOSTIC MONITORING TEST RESULTS [L3 WITH TC] 01-02B-13

DIAGNOSTIC MONITORING TEST RESULTS [L3] 01-02A-17
DIAGNOSTIC TROUBLE CODE NUMBER INSPECTION [L3 WITH TC] 07-02-8
DIAGNOSTIC TROUBLE CODE NUMBER INSPECTION [L3, AJ] 07-02-4
DIFFERENTIAL (REAR) ASSEMBLY 03-14-10
DIFFERENTIAL (REAR) DISASSEMBLY 03-14-6
DIFFERENTIAL (REAR) LOCATION INDEX 03-14-1
DIFFERENTIAL (REAR) REMOVAL/INSTALLATION 03-14-5
DIFFERENTIAL GEAR O-RING REPLACEMENT [AW6A-EL] 05-17B-38
DIFFERENTIAL OIL INSPECTION 03-14-2
DIFFERENTIAL OIL REPLACEMENT 03-14-2
DIFFERENTIAL OIL TEMPERATURE SENSOR INSPECTION 03-19-2
DIFFERENTIAL OIL TEMPERATURE SENSOR REMOVAL/INSTALLATION 03-19-2
DISC PAD (FRONT) REPLACEMENT [L3 WITH TC] 04-11-23
DISC PAD (FRONT) REPLACEMENT [L3, AJ] 04-11-22
DISC PAD (REAR) REPLACEMENT 04-11-30
DISCHARGE HEADLIGHT CONTROL MODULE REMOVAL/INSTALLATION 09-18-10
DISCHARGE HEADLIGHT SERVICE WARNINGS 09-18-7
DISCHARGE HEADLIGHT SYSTEM INSPECTION 09-18-11
DOOR ADJUSTMENT 09-11-3
DOOR GARNISH INSTALLATION 09-16-7
DOOR GARNISH REMOVAL 09-16-6
DOOR GLASS POSITION CHANGE PROCEDURE 09-12-12
DOOR GLASS REMOVAL/INSTALLATION 09-12-3
DOOR KEY CYLINDER (FRONT) REMOVAL/INSTALLATION 09-14-8
DOOR LATCH AND LOCK ACTUATOR (FRONT) REMOVAL/INSTALLATION 09-14-8
DOOR LATCH AND LOCK ACTUATOR (REAR) REMOVAL/INSTALLATION 09-14-9
DOOR LOCK ACTUATOR (FRONT) INSPECTION 09-14-8
DOOR LOCK ACTUATOR (REAR) INSPECTION 09-14-9
DOOR LOCK SWITCH INSPECTION 09-14-11
DOOR LOCK SWITCH REMOVAL/INSTALLATION 09-14-11
DOOR QUARTER GLASS (REAR) REMOVAL/INSTALLATION 09-12-4
DOOR REMOVAL/INSTALLATION 09-11-2
DOOR SPEAKER (FRONT) INSPECTION 09-20-9
DOOR SPEAKER (FRONT) REMOVAL/INSTALLATION 09-20-9
DOOR SPEAKER (REAR) INSPECTION 09-20-10
DOOR SPEAKER (REAR) REMOVAL/INSTALLATION 09-20-10
DOOR SWITCH INSPECTION 09-18-36
DOOR SWITCH REMOVAL/INSTALLATION 09-18-36
DOOR TRIM (FRONT) REMOVAL/INSTALLATION 09-17-12
DOOR TRIM (REAR) REMOVAL/INSTALLATION 09-17-13
DOOR UNIT REMOVAL/INSTALLATION 09-11-4
D-PILLAR TRIM REMOVAL/INSTALLATION [SPORT WAGON] 09-17-
DRAIN HOSE (FRONT) INSTALLATION 09-15-5
DRAIN HOSE (FRONT) REMOVAL 09-15-5
DRAIN HOSE (REAR) INSTALLATION 09-15-8
DRAIN HOSE (REAR) REMOVAL [SPORT SEDAN, 5-DOOR] 09-15-6
DRAIN HOSE (REAR) REMOVAL [SPORT WAGON] 09-15-7
DRIVE BELT AUTO TENSIONER INSPECTION [AJ] 01-10C-5
DRIVE BELT AUTO TENSIONER INSPECTION [L3 WITH TC] 01-10B-3
DRIVE BELT AUTO TENSIONER INSPECTION [L3] 01-10A-3
DRIVE BELT INSPECTION [AJ] 01-10C-3
DRIVE BELT INSPECTION [L3 WITH TC] 01-10B-3
DRIVE BELT INSPECTION [L3] 01-10A-3
DRIVE BELT REPLACEMENT [AJ] 01-10C-4
DRIVE BELT REPLACEMENT [L3 WITH TC] 01-10B-3
DRIVE BELT REPLACEMENT [L3] 01-10A-3
DRIVE PLATE REMOVAL/INSTALLATION [AW6A-EL] 05-17B-54
DRIVE PLATE REMOVAL/INSTALLATION [FS5A-EL] 05-17A-56
DRIVE SHAFT (FRONT) DISASSEMBLY/ASSEMBLY [ATX] 03-13-21
DRIVE SHAFT (FRONT) DISASSEMBLY/ASSEMBLY [MTX] 03-13-
DRIVE SHAFT (FRONT) REMOVAL/INSTALLATION [AJ] 03-13-19
DRIVE SHAFT (FRONT) REMOVAL/INSTALLATION [L3, L3 WITH TC] 03-13-16
DRIVE SHAFT (REAR) DISASSEMBLY/ASSEMBLY 03-13-31
DRIVE SHAFT (REAR) REMOVAL/INSTALLATION 03-13-30
DRIVE SHAFT LOCATION INDEX 03-13-2
DRIVE SHAFT PRE (FRONT) INSPECTION 03-13-15
DRIVE SHAFT PRE (REAR) INSPECTION 03-13-30
DRIVELINE/AXLE TECHNICAL DATA 03-50-1
DRIVER-SIDE AIR BAG MODULE REMOVAL/INSTALLATION 08-10-6
DRL AND AUTO LIGHT-OFF SYSTEM WIRING DIAGRAM 09-18-24
DSC HU/CM 09-02B-6
DSC HU/CM CONFIGURATION 04-15-9
DSC HU/CM INSPECTION 04-15-9
DSC HU/CM REMOVAL/INSTALLATION 04-15-7
DSC LOCATION INDEX 04-15-2
DSC OFF SWITCH INSPECTION 04-15-15
DSC OFF SWITCH REMOVAL/INSTALLATION 04-15-15
DSC ON-BOARD DIAGNOSIS 04-02B-3
DSC SYSTEM INSPECTION 04-15-4
DSC SYSTEM WIRING DIAGRAM [DSC] 04-15-
DSC SYSTEM WIRING DIAGRAM [ON-BOARD DIAGNOSTIC] 04-02B-2
DSC SYSTEM WIRING DIAGRAM [SYMPTOM TROUBLESHOOTING] 04-03B-2

DTC INSPECTION
[ADVANCED KEYLESS SYSTEM]..... 09-02C-3
DTC INSPECTION [BCM]..... 09-02G-1
DTC TABLE
[ADVANCED KEYLESS SYSTEM]..... 09-02C-3
DTC TABLE [AIR BAG SYSTEM]..... 08-02-6
DTC TABLE [AJ]..... 01-02C-13
DTC TABLE [AUDIO SYSTEM]
(ON-BOARD DIAGNOSTIC)..... 09-02D-3
DTC TABLE [AUDIO SYSTEM]
(SYMPTOM TROUBLESHOOTING)..... 09-03C-39
DTC TABLE [AW6A-EL]..... 05-02B-5
DTC TABLE [BCM]..... 09-02G-1
DTC TABLE [FS5A-EL]..... 05-02A-8
DTC TABLE [IMMOBILIZER SYSTEM
(ADVANCED KEYLESS SYSTEM)]..... 09-02E-3
DTC TABLE [IMMOBILIZER SYSTEM]..... 09-02F-3
DTC TABLE [L3 WITH TC]..... 01-02B-14
DTC TABLE [L3]..... 01-02A-18
DTC TABLE [MULTIPLEX COMMUNICATION
SYSTEM (L3 WITH TC)]..... 09-02B-4
DTC TABLE [MULTIPLEX COMMUNICATION
SYSTEM (L3, AJ)]..... 09-02A-4
DUAL PROPORTIONING VALVE (WITHOUT
ABS/TCS OR DSC) AND BRAKE PIPE JOINT
(WITH ABS/TCS OR DSC)
REPLACEMENT..... 04-11-16
DUAL PROPORTIONING VALVE INSPECTION
(WITHOUT ABS/TCS OR DSC)..... 04-11-15

E

EGR BOOST SENSOR INSPECTION
[AJ]..... 01-40C-37
EGR BOOST SENSOR SOLENOID VALVE
INSPECTION [AJ]..... 01-16A-20
EGR SYSTEM DIAGRAM [L3, AJ]..... 01-16A-16
EGR SYSTEM LOCATION INDEX
[L3, AJ]..... 01-16A-15
EGR VALVE INSPECTION [AJ]..... 01-16A-18
EGR VALVE INSPECTION [L3 WITH TC]..... 01-16B-11
EGR VALVE INSPECTION [L3]..... 01-16A-17
EGR VALVE REMOVAL/INSTALLATION
[AJ]..... 01-16A-17
EGR VALVE REMOVAL/INSTALLATION
[L3 WITH TC]..... 01-16B-11
EGR VALVE REMOVAL/INSTALLATION
[L3]..... 01-16A-16
ELECTRICAL SYSTEM
[GENERAL INFORMATION]..... 00-00-19
ELECTRONIC AWD CONTROL SYSTEM
LOCATION INDEX..... 03-19-1
ELECTRONIC AWD CONTROL SYSTEM
ON-BOARD DIAGNOSIS..... 03-02-2
ELECTRONIC AWD CONTROL SYSTEM
WIRING DIAGRAM
[ON-BOARD DIAGNOSTIC]..... 03-02-1
ELECTRONIC AWD CONTROL SYSTEM
WIRING DIAGRAM
[SYMPTOM TROUBLESHOOTING]..... 03-03-1
ELR..... 08-11-7
ENGINE CONTROL SYSTEM OPERATION
INSPECTION [AJ]..... 01-03C-61
ENGINE CONTROL SYSTEM OPERATION
INSPECTION [L3 WITH TC]..... 01-03B-80
ENGINE CONTROL SYSTEM OPERATION
INSPECTION [L3]..... 01-03A-62
ENGINE CONTROL SYSTEM WIRING DIAGRAM
[L3 WITH TC]..... 01-03B-2
ENGINE COOLANT LEAKAGE INSPECTION
[L3 WITH TC]..... 01-12B-5
ENGINE COOLANT LEAKAGE INSPECTION
[L3, AJ]..... 01-12A-7
ENGINE COOLANT LEVEL INSPECTION
[L3 WITH TC]..... 01-12B-2
ENGINE COOLANT LEVEL INSPECTION
[L3, AJ]..... 01-12A-3
ENGINE COOLANT PROTECTION INSPECTION
[L3 WITH TC]..... 01-12B-3
ENGINE COOLANT PROTECTION INSPECTION
[L3, AJ]..... 01-12A-4
ENGINE COOLANT REPLACEMENT
[L3 WITH TC]..... 01-12B-4
ENGINE COOLANT REPLACEMENT
[L3, AJ]..... 01-12A-5
ENGINE COOLANT TEMPERATURE (ECT)
SENSOR INSPECTION [AJ]..... 01-40C-29
ENGINE COOLANT TEMPERATURE (ECT)
SENSOR INSPECTION [L3 WITH TC]..... 01-40B-30
ENGINE COOLANT TEMPERATURE (ECT)
SENSOR INSPECTION [L3]..... 01-40A-35
ENGINE COOLANT TEMPERATURE (ECT)
SENSOR REMOVAL/INSTALLATION [AJ]..... 01-40C-29
ENGINE COOLANT TEMPERATURE (ECT)
SENSOR REMOVAL/INSTALLATION
[L3 WITH TC]..... 01-40B-30
ENGINE COOLANT TEMPERATURE (ECT)
SENSOR REMOVAL/INSTALLATION
[L3]..... 01-40A-34
ENGINE DISASSEMBLY/ASSEMBLY [AJ]..... 01-10C-38
ENGINE DISASSEMBLY/ASSEMBLY
[L3 WITH TC]..... 01-10B-36
ENGINE DISASSEMBLY/ASSEMBLY [L3]..... 01-10A-29
Engine Identification Number
[GENERAL INFORMATION]..... 00-00-31
ENGINE LOCATION INDEX [AJ]..... 01-10C-2
ENGINE OIL LEVEL INSPECTION
[L3 WITH TC]..... 01-11B-2
ENGINE OIL LEVEL INSPECTION
[L3, AJ]..... 01-11A-3
ENGINE OIL REPLACEMENT
[L3 WITH TC]..... 01-11B-2
ENGINE OIL REPLACEMENT [L3, AJ]..... 01-11A-3
ENGINE REMOVAL/INSTALLATION [AJ]..... 01-10C-35
ENGINE REMOVAL/INSTALLATION
[L3 WITH TC]..... 01-10B-29
ENGINE REMOVAL/INSTALLATION [L3]..... 01-10A-25
ENGINE SERVICE TOOLS [L3 WITH T/C]..... 01-60B-1
ENGINE SERVICE TOOLS [L3, AJ]..... 01-60A-1
ENGINE SYMPTOM TROUBLESHOOTING
[L3 WITH TC]..... 01-03B-9
ENGINE SYMPTOM TROUBLESHOOTING
[L3]..... 01-03A-10
ENGINE TECHNICAL DATA
[L3 WITH TC]..... 01-50B-2
ENGINE TECHNICAL DATA [L3, AJ]..... 01-50A-1
ENGINE TUNE-UP [AJ]..... 01-10C-39

AI

ENGINE TUNE-UP [L3 WITH TC] 01-10B-41
ENGINE TUNE-UP [L3] 01-10A-29
ENTERTAINMENT LOCATION INDEX 09-20-2
EVAPORATIVE EMISSION (EVAP)
CONTROL SYSTEM COMPONENT
REMOVAL/INSTALLATION [L3, AJ] 01-16A-5
EVAPORATIVE EMISSION (EVAP) CONTROL
SYSTEM DIAGRAM [L3 WITH TC] 01-16B-4
EVAPORATIVE EMISSION (EVAP) CONTROL
SYSTEM DIAGRAM [L3, AJ] 01-16A-4
EVAPORATIVE EMISSION (EVAP) CONTROL
SYSTEM LOCATION INDEX
[L3 WITH TC] 01-16B-2
EVAPORATIVE EMISSION (EVAP) CONTROL
SYSTEM LOCATION INDEX [L3, AJ] 01-16A-2
EVAPORATIVE EMISSION (EVAP) CONTROL
SYSTEM REMOVAL/INSTALLATION
[L3 WITH TC] 01-16B-4
EVAPORATIVE EMISSION (EVAP) SYSTEM
LEAK DETECTION PUMP INSPECTION
[L3 WITH TC] 01-16B-8
EVAPORATIVE EMISSION (EVAP) SYSTEM
LEAK DETECTION PUMP INSPECTION
[L3, AJ] 01-16A-11
EVAPORATIVE EMISSION (EVAP) SYSTEM
LEAK DETECTION PUMP
REMOVAL/INSTALLATION [L3 WITH TC] 01-16B-8
EVAPORATOR INSPECTION [HVAC] 07-11-14
EVAPORATOR TEMPERATURE SENSOR
INSPECTION [L3 WITH TC] 07-40-25
EVAPORATOR TEMPERATURE SENSOR
INSPECTION [L3, AJ] 07-40-24
EVAPORATOR TEMPERATURE SENSOR
REMOVAL/INSTALLATION [HVAC] 07-40-24
EXHAUST SYSTEM INSPECTION [AJ] 01-15C-1
EXHAUST SYSTEM INSPECTION
[L3 WITH TC] 01-15B-1
EXHAUST SYSTEM INSPECTION [L3] 01-15A-1
EXHAUST SYSTEM REMOVAL/INSTALLATION
[AJ] 01-15C-2
EXHAUST SYSTEM REMOVAL/INSTALLATION
[L3 WITH TC] 01-15B-2
EXHAUST SYSTEM REMOVAL/INSTALLATION
[L3] 01-15A-2
EXPANSION VALVE REMOVAL/INSTALLATION
[L3 WITH TC] 07-11-13
EXTERIOR LIGHTING SYSTEM
LOCATION INDEX 09-18-3
EXTRACTOR CHAMBER
REMOVAL/INSTALLATION 09-16-7

F

FAN CONTROL MODULE INSPECTION
[AJ] 01-12A-15
FAN CONTROL MODULE INSPECTION
[L3 WITH TC] 01-12B-10
FENDER PANEL (FRONT)
REMOVAL/INSTALLATION 09-10-16
FILAMENT INSPECTION 09-12-25
FILAMENT REPAIR 09-12-25
FINISHER (REAR)
REMOVAL/INSTALLATION 09-16-7
FLAP (FRONT)
REMOVAL/INSTALLATION 09-16-4
FLOOR COVERING
REMOVAL/INSTALLATION 09-17-2
Fluid Leakage Inspection 06-12
Fluid Level Inspection 06-12-4
Fluid Pressure Inspection 06-12-5
FLYWHEEL INSPECTION [A26MX-R] 05-10-32
FLYWHEEL INSPECTION
[G35M-R, A65M-R] 05-10-32
FOG LIGHT (FRONT) ADJUSTMENT 09-18-13
FOG LIGHT (FRONT)
REMOVAL/INSTALLATION 09-18-13
FOG LIGHT BULB (FRONT)
REMOVAL/INSTALLATION 09-18-14
FOG LIGHT SWITCH (FRONT)
INSPECTION 09-18-22
FRONT ABS WHEEL-SPEED SENSOR
REMOVAL/INSTALLATION [ABS] 04-13-8
FRONT ABS WHEEL-SPEED SENSOR
REMOVAL/INSTALLATION [DSC] 04-15-11
FRONT AND REAR AXLE SERVICE TOOLS 03-60-1
FRONT ANTENNA FEEDER INSPECTION 09-20-16
FRONT AXLE LOCATION INDEX 03-11-1
FRONT BELTLINE MOLDING
INSTALLATION 09-16-9
FRONT BELTLINE MOLDING REMOVAL 09-16-9
FRONT BRAKE (DISC) INSPECTION 04-11-16
FRONT BRAKE (DISC) REMOVAL/INSTALLATION
[L3 WITH TC] 04-11-20
FRONT BRAKE (DISC) REMOVAL/INSTALLATION
[L3, AJ] 04-11-1
FRONT BUCKLE REMOVAL/INSTALLATION 08-11
FRONT BUMPER DISASSEMBLY/ASSEMBLY
[EXCEPT L3 WITH TC] 09-10-11
FRONT BUMPER DISASSEMBLY/ASSEMBLY
[L3 WITH TC] 09-10-12
FRONT BUMPER REINFORCEMENT
REMOVAL/INSTALLATION 09-10-13
FRONT BUMPER
REMOVAL/INSTALLATION 09-10-10
FRONT COMBINATION LIGHT
REMOVAL/INSTALLATION 09-18-8
FRONT CROSSMEMBER
REMOVAL/INSTALLATION 02-13-20
FRONT DOOR GLASS
REMOVAL/INSTALLATION 09-12-3
FRONT DOOR KEY CYLINDER
REMOVAL/INSTALLATION 09-14-8
FRONT DOOR LATCH AND LOCK ACTUATOR
REMOVAL/INSTALLATION 09-14-8
FRONT DOOR LOCK ACTUATOR
INSPECTION 09-14-8
FRONT DOOR REMOVAL/INSTALLATION 09-11-2
FRONT DOOR SPEAKER INSPECTION 09-20-9
FRONT DOOR SPEAKER
REMOVAL/INSTALLATION 09-20-9
FRONT DOOR TRIM
REMOVAL/INSTALLATION 09-17-12
FRONT DOOR UNIT
REMOVAL/INSTALLATION 09-1
FRONT DRAIN HOSE INSTALLATION 09-15-5
FRONT DRAIN HOSE REMOVAL 09-15-5

FRONT DRIVE SHAFT
DISASSEMBLY/ASSEMBLY [ATX] 03-13-21
FRONT DRIVE SHAFT
DISASSEMBLY/ASSEMBLY [MTX] 03-13-27
ONT DRIVE SHAFT PRE-INSPECTION 03-13-15
FRONT DRIVE SHAFT
REMOVAL/INSTALLATION [AJ] 03-13-19
FRONT DRIVE SHAFT
REMOVAL/INSTALLATION
[L3, L3 WITH TC] 03-13-16
FRONT FENDER PANEL
REMOVAL/INSTALLATION.....09-10-16
FRONT FLAP REMOVAL/INSTALLATION.....09-16-4
FRONT FOG LIGHT ADJUSTMENT.....09-18-13
FRONT FOG LIGHT BULB
REMOVAL/INSTALLATION.....09-18-14
FRONT FOG LIGHT
REMOVAL/INSTALLATION.....09-18-13
FRONT FOG LIGHT
SWITCH INSPECTION 09-18-22
FRONT LOWER ARM (FRONT)
INSPECTION 02-13-15
FRONT LOWER ARM (FRONT)
REMOVAL/INSTALLATION.....02-13-10
FRONT LOWER ARM (REAR)
INSPECTION 02-13-18
FRONT LOWER ARM (REAR)
REMOVAL/INSTALLATION.....02-13-15
FRONT MAP LIGHT INSPECTION.....09-18-28
FRONT MAP LIGHT
REMOVAL/INSTALLATION.....09-18-27
ONT MAP LIGHT
EMOVAL/INSTALLATION
[L3 WITH TC] 09-18-27
FRONT OIL SEAL REPLACEMENT [AJ]..... 01-10C-32
FRONT OIL SEAL REPLACEMENT
[L3 WITH TC] 01-10B-24
FRONT OIL SEAL REPLACEMENT [L3]..... 01-10A-21
FRONT OUTER HANDLE
REMOVAL/INSTALLATION.....09-14-10
FRONT SCUFF PLATE
REMOVAL/INSTALLATION.....09-17-11
FRONT SEAT BELT
REMOVAL/INSTALLATION.....08-11-3
FRONT SEAT DISASSEMBLY/ASSEMBLY
[EXCEPT L3 WITH TC] 09-13-9
FRONT SEAT DISASSEMBLY/ASSEMBL
Y [L3 WITH TC] 09-13-6
FRONT SEAT REMOVAL/INSTALLATION
[EXCEPT L3 WITH TC] 09-13-5
FRONT SEAT REMOVAL/INSTALLATION
[L3 WITH TC] 09-13-4
FRONT SHOCK ABSORBER AND SPRING
DISASSEMBLY/ASSEMBLY.....02-13-5
FRONT SHOCK ABSORBER AND SPRING
REMOVAL/INSTALLATION.....02-13-3
FRONT SHOCK ABSORBER DISPOSAL.....02-13-7
FRONT SHOCK ABSORBER INSPECTION.....02-13-7
FRONT SIDE MARKER LIGHT
EMOVAL/INSTALLATION.....09-18-13
ONT SIDE TRIM
REMOVAL/INSTALLATION.....09-17-11
FRONT STABILIZER CONTROL
LINK INSPECTION.....02-13-19
FRONT STABILIZER
REMOVAL/INSTALLATION 02-13-18
FRONT SUSPENSION LOCATION INDEX 02-13-2
FRONT TILT MOTOR INSPECTION
[EXCEPT L3 WITH TC]..... 09-13-24
FRONT TILT MOTOR INSPECTION
[L3 WITH TC] 09-13-23
FRONT TILT MOTOR REMOVAL/INSTALLATION
[L3 WITH TC] 09-13-22
Front Total Toe-in Adjustment..... 02-11-3
FRONT TURN LIGHT
REMOVAL/INSTALLATION 09-18-12
FRONT UPPER ARM INSPECTION 02-13-9
FRONT UPPER ARM
REMOVAL/INSTALLATION 02-13-8
FRONT WHEEL ALIGNMENT 02-11-2
Front Wheel Bearing Play Inspection 03-11-1
FRONT/REAR ABS WHEEL-SPEED SENSOR
INSPECTION [ABS] 04-13-9
FRONT/REAR ABS WHEEL-SPEED SENSOR
INSPECTION [DSC] 04-15-11
FUEL GAUGE SENDER UNIT INSPECTION
[AWD] 09-22-23
FUEL GAUGE SENDER UNIT INSPECTION
[EXCEPT AWD] 09-22-23
FUEL GAUGE SENDER UNIT
REMOVAL/INSTALLATION [AWD] 09-22-19
FUEL INJECTOR INSPECTION [AJ]..... 01-14A-32
FUEL INJECTOR INSPECTION
[L3 WITH TC] 01-14B-29
FUEL INJECTOR INSPECTION [L3]..... 01-14A-29
FUEL INJECTOR REMOVAL/INSTALLATION
[AJ] 01-14A-27
FUEL INJECTOR REMOVAL/INSTALLATION
[L3 WITH TC] 01-14B-25
FUEL INJECTOR REMOVAL/INSTALLATION
[L3] 01-14A-24
Fuel Leakage Inspection
[Fuel Injector (L3] 01-14A-6
Fuel Leakage Inspection
[Fuel Line (L3 with TC)]..... 01-14B-5
Fuel Leakage Inspection
[Fuel Line (L3)] 01-14A-31
Fuel Leakage Inspection After
Fuel Pump Unit Installation..... 01-14B-15
Fuel Leakage Inspection After High Pressure
Fuel Pump Installation 01-14B-20
Fuel Leakage Test 01-14A-33
FUEL LINE PRESSURE INSPECTION
[L3 WITH TC] 01-14B-5
FUEL LINE PRESSURE INSPECTION
[L3, AJ] 01-14A-7
Fuel Line Safety Procedure [L3 with TC] 01-14B-4
Fuel Line Safety Procedure [L3]..... 01-14A-6
FUEL PRESSURE SENSOR INSPECTION
[L3 WITH TC] 01-40B-34
FUEL PRESSURE SENSOR
REMOVAL/INSTALLATION
[L3 WITH TC] 01-40B-34
FUEL PUMP RESISTOR INSPECTION
[L3 WITH TC] 01-14B-18
FUEL PUMP RESISTOR
REMOVAL/INSTALLATION
[L3 WITH TC] 01-14B-17

AI

FUEL PUMP UNIT DISASSEMBLY/ASSEMBLY [L3 WITH TC] 01-14B-15
FUEL PUMP UNIT DISASSEMBLY/ASSEMBLY [L3, AJ] 01-14A-20
FUEL PUMP UNIT INSPECTION [L3 WITH TC] 01-14B-16
FUEL PUMP UNIT INSPECTION [L3, AJ] 01-14A-21
FUEL PUMP UNIT REMOVAL/INSTALLATION [L3 WITH TC] 01-14B-9
FUEL PUMP UNIT REMOVAL/INSTALLATION [L3, AJ] 01-14A-13
FUEL SHUT-OFF/ROLLOVER VALVE INSPECTION [L3 WITH TC] 01-14B-9
FUEL SHUT-OFF/ROLLOVER VALVE INSPECTION[L3, AJ] 01-14A-12
FUEL SYSTEM DIAGRAM [L3 WITH TC] 01-14B-4
FUEL SYSTEM DIAGRAM [L3, AJ] 01-14A-5
FUEL SYSTEM LOCATION INDEX [L3 WITH TC] 01-14B-2
FUEL SYSTEM LOCATION INDEX [L3, AJ] 01-14A-2
FUEL TANK REMOVAL/INSTALLATION [L3 WITH TC] 01-14B-7
FUEL TANK REMOVAL/INSTALLATION [L3, AJ] 01-14A-10
FUEL-FILLER CAP INSPECTION [L3 WITH TC] 01-16B-7
FUEL-FILLER CAP INSPECTION [L3, AJ] 01-16A-9
FUEL-FILLER LID ADJUSTMENT 09-10-3
FUEL-FILLER LID AND OPENER REMOVAL/INSTALLATION 09-14-24
FUEL-FILLER LID REMOVAL/INSTALLATION 09-10-2
FUSE BLOCK REMOVAL/INSTALLATION 09-21-3
FUSE SERVICE CAUTION 09-21-2

G

GENERAL PROCEDURE 05-10-3
GENERAL PROCEDURES (BRAKES) 04-10-1
GENERAL PROCEDURES (STEERING) 06-10-1
GENERATOR DISASSEMBLY/ASSEMBLY [L3 WITH TC] 01-17B-9
GENERATOR DISASSEMBLY/ASSEMBLY [L3, AJ] 01-17A-10
GENERATOR INSPECTION [L3 WITH TC] 01-17B-6
GENERATOR INSPECTION [L3, AJ] 01-17A-5
GENERATOR REMOVAL/INSTALLATION [L3 WITH TC] 01-17B-4
GENERATOR REMOVAL/INSTALLATION [L3, AJ] 01-17A-4
GLASS PANEL ADJUSTMENT 09-15-4
GLASS PANEL REMOVAL/INSTALLATION 09-15-4
GLOVE COMPARTMENT LIGHT BULB REMOVAL/INSTALLATION 09-18-33
GLOVE COMPARTMENT REMOVAL/INSTALLATION 09-17-9
GPS ANTENNA FEEDER INSPECTION 09-20-18
GPS ANTENNA REMOVAL/INSTALLATION 09-20-14

H

HAZARD WARNING SWITCH INSPECTION 09-18-21
HEADLIGHT ADJUSTMENT 09-18-8
HEADLIGHT BULB REMOVAL/INSTALLATION 09-18-9
HEADLIGHT LEVELING SWITCH INSPECTION 09-18-22
HEADLIGHT LEVELING SWITCH REMOVAL/INSTALLATION 09-18-22
HEADLINER REMOVAL/INSTALLATION 09-17-24
HEAT DUCT (REAR/REAR) REMOVAL/INSTALLATION [L3 WITH TC] 07-11-14
HEATED OXYGEN SENSOR (HO2S) INSPECTION [AJ] 01-40C-33
HEATED OXYGEN SENSOR (HO2S) INSPECTION [L3 WITH TC] 01-40B-42
HEATED OXYGEN SENSOR (HO2S) INSPECTION [L3] 01-40A-37
HEATER CORE INSPECTION 07-11-14
Hermetic sealing inspection 06-12-26
HIGH PRESSURE FUEL PUMP INSPECTION [L3 WITH TC] 01-14B-20
HIGH PRESSURE FUEL PUMP REMOVAL/INSTALLATION [L3 WITH TC] 01-14B-18
HIGH-MOUNT BRAKE LIGHT REMOVAL/INSTALLATION [5-DOOR, SPORT WAGON] 09-18-
HIGH-MOUNT BRAKE LIGHT REMOVAL/INSTALLATION [L3 WITH TC] 09-18-18
HIGH-MOUNT BRAKE LIGHT REMOVAL/INSTALLATION [SPORT SEDAN] 09-18-16
HOOD ADJUSTMENT [EXCEPT L3 WITH TC] 09-10-5
HOOD ADJUSTMENT [L3 WITH TC] 09-10-6
HOOD REMOVAL/INSTALLATION [EXCEPT L3 WITH TC] 09-10-3
HOOD REMOVAL/INSTALLATION [L3 WITH TC] 09-10-4
HOOD SWITCH INSPECTION 09-14-27
HORN REMOVAL/INSTALLATION 09-22-24
HOW TO USE THIS MANUAL [GENERAL INFORMATION] 00-00-3
HVAC SYSTEM WIRING DIAGRAM [L3 WITH TC] (ON-BOARD DIAGNOSTIC) 07-02-3
HVAC SYSTEM WIRING DIAGRAM [L3 WITH TC] (SYMPTOM TROUBLESHOOTING) 07-03-4
HVAC SYSTEM WIRING DIAGRAM [L3, AJ] (ON-BOARD DIAGNOSTIC) 07-02-2
HVAC SYSTEM WIRING DIAGRAM [L3, AJ]] (SYMPTOM TROUBLESHOOTING) 07-03-2
HVAC TECHNICAL DATA [L3 WITH TC] 07-50-1
HVAC TECHNICAL DATA [L3, AJ] 07-50-1
HYDRAULIC LASH ADJUSTER (HLA) REMOVAL/INSTALLATION [AJ] 01-10C-2

I

ENTIFICATION NUMBER LOCATIONS [GENERAL INFORMATION] 00-00-31
Idle Mixture Inspection [AJ] 01-10C-40
Idle Mixture Inspection [L3 with TC] 01-10B-41
Idle Mixture Inspection [L3] 01-10A-30
Idle Speed Inspection [AJ] 01-10C-39
Idle Speed Inspection [L3 with TC] 01-10B-41
Idle Speed Inspection [L3] 01-10A-30
IGNITION COIL INSPECTION [L3 WITH TC] 01-18B-2
IGNITION COIL INSPECTION [L3, AJ] 01-18A-3
IGNITION COIL REMOVAL/INSTALLATION [L3 WITH TC] 01-18B-2
IGNITION COIL REMOVAL/INSTALLATION [L3, AJ] 01-18A-2
IGNITION KEY ILLUMINATION BULB REMOVAL/INSTALLATION 09-18-31
IGNITION SWITCH INSPECTION [WITH ADVANCED KEYLESS SYSTEM] 09-21-5
IGNITION SWITCH INSPECTION[WITHOUT ADVANCED KEYLESS SYSTEM] 09-21-3
IGNITION SWITCH REMOVAL/INSTALLATION 09-21-3
IGNITION SYSTEM LOCATION INDEX [L3 WITH TC] 01-18B-1
Ignition Timing Inspection [AJ] 01-10C-39
Ignition Timing Inspection [L3 with TC] 01-10B-41
ition Timing Inspection [L3] 01-10A-29
MOBILIZER SYSTEM COMPONENT REPLACEMENT/KEY ADDITION AND CLEARING [WITH ADVANCED KEYLESS SYSTEM] 09-14-28
IMMOBILIZER SYSTEM LOCATION INDEX [WITH ADVANCED KEYLESS SYSTEM] 09-14-6
IMMOBILIZER SYSTEM LOCATION INDEX [WITH KEYLESS ENTRY SYSTEM] 09-14-7
IMMOBILIZER SYSTEM REPROGRAM PROCEDURE [WITH KEYLESS ENTRY SYSTEM] 09-14-39
INBOARD COMBINATION LIGHT REMOVAL/INSTALLATION 09-18-15
INFORMATION DISPLAY REMOVAL/INSTALLATION 09-22-24
INJECTOR DRIVER MODULE INSPECTION [L3 WITH TC] 01-40B-21
INJECTOR DRIVER MODULE REMOVAL/INSTALLATION[L3 WITH TC] 01-40B-21
INNER GARNISH REMOVAL/INSTALLATION 09-17-7
INNER HANDLE REMOVAL/INSTALLATION 09-14-10
INPUT/TURBINE SPEED SENSOR INSPECTION [AW6A-EL] 05-17B-16
INPUT/TURBINE SPEED SENSOR INSPECTION [FS5A-EL] 05-17A-22
PUT/TURBINE SPEED SENSOR EMOVAL/INSTALLATION [AW6A-EL] 05-17B-18
NPUT/TURBINE SPEED SENSOR REMOVAL/INSTALLATION [FS5A-EL] 05-17A-23
INSPECTION AFTER TRANSAXLE INSTALLATION [A26MX-R] 05-15C-8
INSPECTION AFTER TRANSAXLE INSTALLATION [A65M-R] 05-15B-11
INSPECTION AFTER TRANSAXLE INSTALLATION [G35M-R] 05-15A-9
INSPECTION OF SERVICE TOOLS (DEPLOYMENT TOOL) 08-10-34
INSTALLATION OF RADIO SYSTEM [GENERAL INFORMATION] 00-00-19
INSTRUMENT CLUSTER CONFIGURATION 09-22-4
INSTRUMENT CLUSTER DISASSEMBLY/ASSEMBLY 09-22-4
INSTRUMENT CLUSTER INPUT/OUTPUT CHECK MODE 09-22-7
INSTRUMENT CLUSTER INSPECTION 09-22-5
INSTRUMENT CLUSTER REMOVAL/INSTALLATION 09-22-3
INSTRUMENT CLUSTER REPAIR 09-22-6
INSTRUMENTATION/DRIVER INFO. LOCATION INDEX 09-22-2
INTAKE AIR SYSTEM FLOW DIAGRAM [AJ] 01-13C-2
INTAKE AIR SYSTEM FLOW DIAGRAM [L3 WITH TC] 01-13B-3
INTAKE AIR SYSTEM FLOW DIAGRAM [L3] 01-13A-3
INTAKE AIR SYSTEM LOCATION INDEX [AJ] 01-13C-1
INTAKE AIR SYSTEM LOCATION INDEX [L3 WITH TC] 01-13B-2
INTAKE AIR SYSTEM LOCATION INDEX [L3] 01-13A-2
INTAKE AIR SYSTEM REMOVAL/INSTALLATION [AJ] 01-13C-2
INTAKE AIR SYSTEM REMOVAL/INSTALLATION [L3 WITH TC] 01-13B-4
INTAKE AIR SYSTEM REMOVAL/INSTALLATION [L3] 01-13A-4
INTAKE AIR TEMPERATURE (IAT) SENSOR INSPECTION [AJ] 01-40C-31
INTAKE AIR TEMPERATURE (IAT) SENSOR INSPECTION [L3 WITH TC] 01-40B-33
INTAKE AIR TEMPERATURE (IAT) SENSOR INSPECTION [L3] 01-40A-33
INTERIOR LIGHTING SYSTEM LOCATION INDEX 09-18-6
INTERLOCK CABLE ADJUSTMENT 05-18-3
INTERLOCK CABLE INSPECTION 05-18-2
INTERMEDIATE SENSOR INSPECTION [FS5A-EL] 05-17A-23
INTERMEDIATE SENSOR REMOVAL/INSTALLATION [FS5A-EL] 05-17A-25
INTERMITTENT CONCERN TROUBLESHOOTING 09-03A-4
INTERMITTENT CONCERN TROUBLESHOOTING [AJ] 01-03C-5
INTERMITTENT CONCERN TROUBLESHOOTING [L3 WITH TC] 01-03B-6
INTERMITTENT CONCERN TROUBLESHOOTING [L3] 01-03A-7

AI

J

Jacking Positions [Mazda6]
[GENERAL INFORMATION] 00-00-26
Jacking Positions [MAZDASPEED6]
[GENERAL INFORMATION] 00-00-27
JACKING POSITIONS, VEHICLE LIFT
(2 SUPPORTS)AND SAFETY STAND
(RIGID RACK) POSITIONS
[GENERAL INFORMATION] 00-00-26
JOINT SHAFT ASSEMBLY [AJ] 03-13-12
JOINT SHAFT ASSEMBLY [L3 WITH TC] 03-13-14
JOINT SHAFT DISASSEMBLY [AJ] 03-13-11
JOINT SHAFT DISASSEMBLY
[L3 WITH TC] 03-13-13
JOINT SHAFT
DISASSEMBLY/ASSEMBLY [L3] 03-13-8
JOINT SHAFT PRE-INSPECTION 03-13-3
JOINT SHAFT REMOVAL/INSTALLATION
[AJ] 03-13-5
JOINT SHAFT REMOVAL/INSTALLATION
[L3 WITH TC] 03-13-7
JOINT SHAFT REMOVAL/INSTALLATION
[L3] 03-13-3

K

KEY INTERLOCK INSPECTION 05-18-1
KEY REMINDER SWITCH INSPECTION. 09-21-4
KEY REMINDER SWITCH
REMOVAL/INSTALLATION 09-21-4
KEYLESS ANTENNA
REMOVAL/INSTALLATION 09-14-19
KEYLESS BEEPER
REMOVAL/INSTALLATION 09-14-20
KEYLESS CONTROL MODULE CONFIGURATION
[WITH ADVANCED KEYLESS SYSTEM] 09-14-17
KEYLESS CONTROL MODULE INSPECTION
[WITH ADVANCED KEYLESS SYSTEM] 09-14-13
KEYLESS CONTROL MODULE
REMOVAL/INSTALLATION [WITH ADVANCED
KEYLESS SYSTEM] 09-14-12
KEYLESS ENTRY SYSTEM
WIRING DIAGRAM 09-03G-1
KEYLESS ENTRY SYSTEM WIRING DIAGRAM
[ADVANCED KEYLESS SYSTEM] 09-03F-2
KEYLESS RECEIVER INSPECTION 09-14-18
KEYLESS RECEIVER
REMOVAL/INSTALLATION 09-14-18
KNOCK SENSOR (KS) INSPECTION [AJ]. 01-40C-38
KNOCK SENSOR (KS) INSPECTION
[L3 WITH TC] 01-40B-35
KNOCK SENSOR (KS)
INSPECTION [L3] 01-40A-49
KNOCK SENSOR (KS)
REMOVAL/INSTALLATION [AJ]. 01-40C-38
KNOCK SENSOR (KS) REMOVAL/INSTALLATION
[L3 WITH TC] 01-40B-36
KNOCK SENSOR (KS)
REMOVAL/INSTALLATION[L3] 01-40A-49
KOEO/KOER SELF TEST [AJ] 01-02C-8
KOEO/KOER SELF TEST [L3 WITH TC] 01-02B-9
KOEO/KOER SELF TEST [L3] 01-02A-12

L

LATERAL LINK (REAR)
REMOVAL/INSTALLATION 02-14-10
LCD UNIT REMOVAL/INSTALLATION 09-20-6
LICENSE PLATE LIGHT
REMOVAL/INSTALLATION 09-18-18
LIFTGATE ADJUSTMENT [5-DOOR] 09-11-8
LIFTGATE ADJUSTMENT
[SPORT WAGON] 09-11-8
LIFTGATE LATCH AND LOCK ACTUATOR
REMOVAL/INSTALLATION
[5-DOOR, SPORT WAGON] 09-14-25
LIFTGATE LOCK ACTUATOR INSPECTION
[5-DOOR, SPORT WAGON] 09-14-26
LIFTGATE LOWER TRIM
REMOVAL/INSTALLATION
[5-DOOR, SPORT WAGON] 09-17-23
LIFTGATE OUTER HANDLE
REMOVAL/INSTALLATION
[5-DOOR, SPORT WAGON] 09-14-25
LIFTGATE REMOVAL/INSTALLATION
[5-DOOR] 09-11-5
LIFTGATE REMOVAL/INSTALLATION
[SPORT WAGON] 09-11-6
LIFTGATE SIDE TRIM REMOVAL/INSTALLATION
[5-DOOR, SPORT WAGON] 09-17-22
LIFTGATE UPPER TRIM
REMOVAL/INSTALLATION
[5-DOOR, SPORT WAGON] 09-17-21
LIGHT SWITCH INSPECTION 09-18-21
LIGHT SWITCH
REMOVAL/INSTALLATION 09-18-21
Line Pressure Test [AW6A-EL] 05-17B-4
Line Pressure Test [FS5A-EL] 05-17A-5
LOCATION INDEX [EXCEPT L3 WITH TC] 09-13-3
LOCATION INDEX [L3 WITH TC] 09-13-2
LOWER ARM (FRONT) (FRONT)
INSPECTION 02-13-15
LOWER ARM (FRONT) (FRONT)
REMOVAL/INSTALLATION 02-13-10
LOWER ARM (REAR)
REMOVAL/INSTALLATION 02-14-6
LOWER PANEL REMOVAL/INSTALLATION 09-17-7
LUBRICATION SYSTEM LOCATION INDEX
[L3 WITH TC] 01-11B-1
LUBRICATION SYSTEM LOCATION INDEX
[L3, AJ] 01-11A-2

M

M Range Test [AW6A-EL] 05-17B-10
M Range Test [FS5A-EL] 05-17A-10
MAF Rate and Load Value 01-40C-
MAGNETIC CLUTCH ADJUSTMENT
[L3 WITH TC] 07-40-19
MAGNETIC CLUTCH ADJUSTMENT
[L3, AJ] 07-40-19

MAGNETIC CLUTCH DISASSEMBLY/ASSEMBLY [L3 WITH TC] 07-40-17
MAGNETIC CLUTCH DISASSEMBLY/ASSEMBLY [L3, AJ] 07-40-16
MAGNETIC CLUTCH INSPECTION [L3 WITH TC] 07-40-20
MAGNETIC CLUTCH INSPECTION [L3, AJ] 07-40-20
MAIN FUSE REMOVAL/INSTALLATION 09-21-2
MANIFOLD ABSOLUTE PRESSURE (MAP) SENSOR INSPECTION [L3 WITH TC] 01-40B-31
MANIFOLD ABSOLUTE PRESSURE (MAP) SENSOR INSPECTION [L3] 01-40A-36
MANIFOLD ABSOLUTE PRESSURE (MAP) SENSOR/BOOST AIR TEMPERATURE SENSOR REMOVAL/INSTALLATION [L3 WITH TC] 01-40B-31
MANUAL TRANSAXLE LOCATION INDEX [A26MX-R] 05-15C-1
MANUAL TRANSAXLE LOCATION INDEX [A65M-R] 05-15B-1
MANUAL TRANSAXLE LOCATION INDEX [G35M-R] 05-15A-1
MANUAL TRANSAXLE REMOVAL/INSTALLATION [A26MX-R] 05-15C-4
MANUAL TRANSAXLE REMOVAL/INSTALLATION [A65M-R] 05-15B-5
MANUAL TRANSAXLE REMOVAL/INSTALLATION [G35M-R] 05-15A-4
MANUAL TRANSAXLE SHIFT MECHANISM LOCATION INDEX [A26MX-R] 05-16-2
MANUAL TRANSAXLE SHIFT MECHANISM LOCATION INDEX [G35M-R, A65M-R] 05-16-1
MANUAL TRANSAXLE TECHNICAL DATA 05-50-1
MAP LIGHT (FRONT) INSPECTION 09-18-28
MAP LIGHT (FRONT/FRONT) REMOVAL/INSTALLATION 09-18-27
MAP LIGHT (REAR) INSPECTION 09-18-29
MAP LIGHT (REAR) REMOVAL/INSTALLATION 09-18-28
MASS AIR FLOW (MAF) SENSOR INSPECTION [AJ] 01-40C-32
MASS AIR FLOW (MAF) SENSOR INSPECTION [L3 WITH TC] 01-40B-29
MASS AIR FLOW (MAF) SENSOR INSPECTION [L3] 01-40A-32
MASTER CYLINDER DISASSEMBLY/ASSEMBLY 04-11-11
MASTER CYLINDER REMOVAL/INSTALLATION 04-11-9
Maximum Steering Angle Adjustment 02-11-2
MECHANICAL LOCATION INDEX [L3 WITH TC] 01-10B-2
MECHANICAL LOCATION INDEX [L3] 01-10A-2
MECHANICAL SYSTEM TEST [AW6A-EL] 05-17B-3
MECHANICAL SYSTEM TEST [FS5A-EL] 05-17A-4
MEMORY CLEARING PROCEDURE [AUDIO] 09-02D-2
METER HOOD REMOVAL/INSTALLATION 09-17-6
MICROPHONE REMOVAL/INSTALLATION 09-20-14
MONITORING SYSTEM AND CONTROL SYSTEM DEVICE RELATIONSHIP CHART [AJ] 01-02C-5
MONITORING SYSTEM AND CONTROL SYSTEM DEVICE RELATIONSHIP CHART [L3 WITH TC] 01-02B-5
MONITORING SYSTEM AND CONTROL SYSTEM DEVICE RELATIONSHIP CHART [L3] 01-02A-8
MULTIPLEX COMMUNICATION SYSTEM [L3 WITH TC] 09-02B-2
MULTIPLEX COMMUNICATION SYSTEM [L3, AJ] 09-02A-2

N

NEUTRAL SWITCH INSPECTION [AJ] 01-40C-24
NEUTRAL SWITCH INSPECTION [L3 WITH TC] 01-40B-23
NEUTRAL SWITCH INSPECTION [L3] 01-40A-26
NEUTRAL SWITCH REMOVAL/INSTALLATION [A26MX-R] 05-15C-3
NEUTRAL SWITCH REMOVAL/INSTALLATION [A65M-R] 05-15B-4
NONRETURN VALVE INSPECTION [L3, AJ] 01-14A-13

O

OBD-II DIAGNOSTIC MONITORING TEST RESULTS [AJ] 01-02C-6
OBD-II DIAGNOSTIC MONITORING TEST RESULTS [L3 WITH TC] 01-02B-6
OBD-II DIAGNOSTIC MONITORING TEST RESULTS [L3] 01-02A-10
OBD-II DRIVE MODE [AJ] 01-02C-8
OBD-II DRIVE MODE [L3 WITH TC] 01-02B-9
OBD-II DRIVE MODE [L3] 01-02A-13
OBD-II FREEZE FRAME DATA [AJ] 01-02C-5
OBD-II FREEZE FRAME DATA [L3 WITH TC] 01-02B-6
OBD-II FREEZE FRAME DATA [L3] 01-02A-10
OBD-II ON-BOARD SYSTEM READINESS TEST [AJ] 01-02C-5
OBD-II ON-BOARD SYSTEM READINESS TEST [L3 WITH TC] 01-02B-6
OBD-II ON-BOARD SYSTEM READINESS TEST [L3] 01-02A-10
OBD-II PARAMETER IDENTIFICATION (PID) ACCESS [AJ] 01-02C-6
OBD-II PARAMETER IDENTIFICATION (PID) ACCESS [L3 WITH TC] 01-02B-7
OBD-II PARAMETER IDENTIFICATION (PID) ACCESS [L3] 01-02A-11
OBD-II PENDING TROUBLE CODE [L3 WITH TC] 01-02B-6
OBD-II PENDING TROUBLE CODE [L3] 01-02A-10
OBD-II PENDING TROUBLE CODES [AJ] 01-02C-5
OBD-II READ/CLEAR DIAGNOSTIC TEST RESULTS [AJ] 01-02C-6
OBD-II READ/CLEAR DIAGNOSTIC TEST RESULTS [L3 WITH TC] 01-02B-6
OBD-II READ/CLEAR DIAGNOSTIC TEST RESULTS [L3] 01-02A-10

AI

OIL CONTROL VALVE (OCV) INSPECTION [AJ] 01-10C-42
OIL CONTROL VALVE (OCV) INSPECTION [L3 WITH TC] 01-10B-39
OIL CONTROL VALVE (OCV) INSPECTION [L3] 01-10A-32
OIL CONTROL VALVE (OCV) REMOVAL/INSTALLATION [AJ] 01-10C-41
OIL CONTROL VALVE (OCV) REMOVAL/INSTALLATION [L3 WITH TC] 01-10B-38
OIL CONTROL VALVE (OCV) REMOVAL/INSTALLATION [L3] 01-10A-31
OIL COOLER DISASSEMBLY/ASSEMBLY [AW6A-EL] 05-17B-52
OIL COOLER DISASSEMBLY/ASSEMBLY [FS5A-EL] 05-17A-54
OIL COOLER FLUSHING [AW6A-EL] 05-17B-48
OIL COOLER FLUSHING [FS5A-EL] 05-17A-51
OIL COOLER REMOVAL/INSTALLATION [AW6A-EL] 05-17B-49
OIL COOLER REMOVAL/INSTALLATION [FS5A-EL] 05-17A-52
OIL COOLER REMOVAL/INSTALLATION [L3 WITH TC] 01-11B-5
OIL FILTER REPLACEMENT [L3 WITH TC] 01-11B-4
OIL FILTER REPLACEMENT [L3, AJ] 01-11A-7
OIL PAN REMOVAL/INSTALLATION [L3 WITH TC] 01-11B-5
OIL PAN REMOVAL/INSTALLATION [L3, AJ] 01-11A-8
OIL PRESSURE INSPECTION [L3 WITH TC] 01-11B-3
OIL PRESSURE INSPECTION [L3, AJ] 01-11A-5
OIL PRESSURE SWITCH (ENGINE) INSPECTION 09-22-23
OIL PRESSURE SWITCH INSPECTION [FS5A-EL] 05-17A-21
OIL PRESSURE SWITCH REMOVAL/INSTALLATION [FS5A-EL] 05-17A-22
OIL PUMP REMOVAL/INSTALLATION [L3 WITH TC] 01-11B-8
OIL PUMP REMOVAL/INSTALLATION [L3, AJ] 01-11A-12
OIL SEAL (COMPANION FLANGE) REPLACEMENT [DIFFERENTIAL] 03-14-4
OIL SEAL (DIFFERENTIAL) REPLACEMENT [A26MX-R] 05-15C-2
OIL SEAL (DIFFERENTIAL) REPLACEMENT [A65M-R] 05-15B-3
OIL SEAL (DIFFERENTIAL) REPLACEMENT [AW6A-EL] 05-17B-37
OIL SEAL (DIFFERENTIAL) REPLACEMENT [G35M-R] 05-15A-3
OIL SEAL (FRONT) REPLACEMENT [AJ] 01-10C-32
OIL SEAL (FRONT) REPLACEMENT [L3 WITH TC] 01-10B-24
OIL SEAL (FRONT) REPLACEMENT [L3] 01-10A-21
OIL SEAL (MANUAL SHAFT) REPLACEMENT [AW6A-EL] 05-17B-29
OIL SEAL (OIL PUMP) REPLACEMENT [AW6A-EL] 05-17B-47
OIL SEAL (REAR) REPLACEMENT [AJ] 01-10C-34
OIL SEAL (REAR) REPLACEMENT [L3 WITH TC] 01-10B-28
OIL SEAL (REAR) REPLACEMENT [L3] 01-10A-24
OIL SEAL (SIDE GEAR) REPLACEMENT [DIFFERENTIAL] 03-14
OIL SEAL REPLACEMENT [FS5A-EL] 05-17A-45
ON-BOARD DIAGNOSTIC TEST [AJ] 01-02C-6
ON-BOARD DIAGNOSTIC TEST [L3 WITH TC] 01-02B-7
ON-BOARD DIAGNOSTIC TEST [L3] 01-02A-11
ON-BOARD DIAGNOSTIC WIRING DIAGRAM [L3 WITH TC] 01-02B-3
ON-BOARD DIAGNOSTIC WIRING DIAGRAM [L3] 01-02A-4
OUTER HANDLE (FRONT) REMOVAL/INSTALLATION 09-14-10
OUTER HANDLE (REAR) REMOVAL/INSTALLATION 09-14-11

P

P Position Test [AW6A-EL] 05-17B-11
P Position Test [FS5A-EL] 05-17A-10
PACKAGE TRIM (REAR) REMOVAL/INSTALLATION [SPORT SEDAN] 09-17-16
PANEL LIGHT CONTROL SWITCH INSPECTION 09-18-34
PANEL LIGHT CONTROL SWITCH REMOVAL/INSTALLATION 09-18-34
PANEL UNIT (CENTER) DISASSEMBLY/ASSEMBLY 09-20
PANEL UNIT (CENTER) REMOVAL/INSTALLATION 09-20-4
PARKING BRAKE (LEVER TYPE) ADJUSTMENT 04-12-2
PARKING BRAKE (LEVER TYPE) INSPECTION 04-12-1
PARKING BRAKE (LEVER TYPE) REMOVAL/INSTALLATION 04-12-2
PARKING BRAKE LOCATION INDEX 04-12-1
PARKING LIGHT BULB REMOVAL/INSTALLATION 09-18-12
PARTITION BOARD REMOVAL/INSTALLATION 09-17-19
PASSENGER AIR BAG DEACTIVATION (PAD) INDICATOR REMOVAL/INSTALLATION 08-10-15
PASSENGER COMPARTMENT TEMPERATURE SENSOR INSPECTION [L3 WITH TC] 07-40-24
PASSENGER COMPARTMENT TEMPERATURE SENSOR INSPECTION [L3, AJ] 07-40-23
PASSENGER COMPARTMENT TEMPERATURE SENSOR REMOVAL/INSTALLATION [L3 WITH TC] 07-40-23
PASSENGER COMPARTMENT TEMPERATURE SENSOR REMOVAL/INSTALLATION [L3, AJ] 07-40-23
PASSENGER-SIDE AIR BAG MODULE REMOVAL/INSTALLATION 08-10
PCM [MULTIPLEX COMMUNICATION SYSTEM (L3 WITH TC)] 09-02A-5
PCM [MULTIPLEX COMMUNICATION SYSTEM (L3, AJ)] 09-02B-6

PCM CONFIGURATION [L3 WITH TC] 01-40B-20
PCM INSPECTION [AJ] 01-40C-6
PCM INSPECTION [L3 WITH TC] 01-40B-6
PCM INSPECTION [L3] 01-40A-9
PCM REMOVAL/INSTALLATION [AJ] 01-40C-5
PCM REMOVAL/INSTALLATION [L3 WITH TC] 01-40B-6
PCM REMOVAL/INSTALLATION [L3] 01-40A-9
PCM REPLACEMENT [AJ] 01-40C-23
PCM REPLACEMENT [L3] 01-40A-24
PID/DATA MONITOR AND RECORD PROCEDURE 09-22-19
PID/DATA MONITOR INSPECTION [A6WA-EL] 05-02B-96
PID/DATA MONITOR INSPECTION [FS5A-EL] 05-02A-91
PID/DATA MONITOR TABLE [ADVANCED KEYLESS SYSTEM] 09-02C-4
PID/DATA MONITOR TABLE [AIR BAG SYSTEM] 08-02-10
PID/DATA MONITOR TABLE [BCM] 09-02G-2
PID/DATA MONITOR TABLE [IMMOBILIZER SYSTEM (ADVANCED KEYLESS SYSTEM)] 09-02E-4
PID/DATA MONITOR TABLE [IMMOBILIZER SYSTEM (KEYLESS ENTRY SYSTEM)] 09-02F-4
PID/DATA MONITOR TABLE [MULTIPLEX COMMUNICATION SYSTEM (L3 WITH TC)] 09-02B-5
PID/DATA MONITOR TABLE [MULTIPLEX COMMUNICATION SYSTEM (L3, AJ)] 09-02A-4
PINION BEARING INSPECTION 05-10-31
PLUG HOLE PLATE REMOVAL/INSTALLATION [L3] 01-10A-4
POSITIVE CRANKCASE VENTILATION (PCV) SYSTEM AND CATALYTIC CONVERTER SYSTEM LOCATION INDEX [L3, AJ] 01-16A-21
POSITIVE CRANKCASE VENTILATION (PCV) SYSTEM FLOW DIAGRAM [L3, AJ] 01-16A-22
POSITIVE CRANKCASE VENTILATION (PCV) VALVE INSPECTION [AJ] 01-16A-23
POSITIVE CRANKCASE VENTILATION (PCV) VALVE INSPECTION [L3 WITH TC] 01-16B-13
POSITIVE CRANKCASE VENTILATION (PCV) VALVE INSPECTION [L3] 01-16A-23
POWER BRAKE UNIT INSPECTION 04-11-13
POWER BRAKE UNIT REMOVAL/INSTALLATION 04-11-14
POWER DOOR LOCK SYSTEM AND KEYLESS ENTRY SYSTEM LOCATIONINDEX [WITH ADVANCED KEYLESS SYSTEM] 09-14-3
POWER DOOR LOCK SYSTEM AND KEYLESS ENTRY SYSTEM LOCATION INDEX [WITH KEYLESS ENTRY SYSTEM] 09-14-4
POWER METAL OXIDE SEMICONDUCTOR FIELD EFFECT TRANSISTOR (POWER MOS FET) INSPECTION [L3 WITH TC] 07-40-16
POWER METAL OXIDE SEMICONDUCTOR FIELD EFFECT TRANSISTOR (POWER MOS FET) REMOVAL/INSTALLATION [L3 WITH TC] 07-40-16
POWER OUTER MIRROR DISASSEMBLY/ASSEMBLY 09-12-26
POWER OUTER MIRROR INSPECTION 09-12-27
POWER OUTER MIRROR REMOVAL/INSTALLATION 09-12-26
POWER OUTER MIRROR SWITCH INSPECTION 09-12-28
POWER OUTER MIRROR SWITCH REMOVAL/INSTALLATION 09-12-28
POWER SEAT SWITCH INSPECTION 09-13-28
POWER STEERING FLUID INSPECTION 06-12-4
POWER STEERING OIL PUMP DISASSEMBLY/ASSEMBLY [AJ] 06-12-32
POWER STEERING OIL PUMP DISASSEMBLY/ASSEMBLY [L3, L3 WITH TC] 06-12-29
POWER STEERING OIL PUMP REMOVAL/INSTALLATION [AJ] 06-12-28
POWER STEERING OIL PUMP REMOVAL/INSTALLATION [L3, L3 WITH TC] 06-12-27
POWER STEERING PRESSURE (PSP) SWITCH INSPECTION [AJ] 01-40C-25
POWER STEERING PRESSURE (PSP) SWITCH INSPECTION [L3 WITH TC] 01-40B-24
POWER STEERING PRESSURE (PSP) SWITCH INSPECTION [L3] 01-40A-27
POWER SYSTEM LOCATION INDEX 09-21-1
POWER WINDOW MAIN SWITCH INSPECTION 09-12-7
POWER WINDOW MOTOR INSPECTION 09-12-6
POWER WINDOW MOTOR REMOVAL/INSTALLATION 09-12-5
POWER WINDOW REGULATOR REMOVAL/INSTALLATION 09-12-4
POWER WINDOW SUBSWITCH INSPECTION 09-12-9
POWER WINDOW SWITCH REMOVAL/INSTALLATION 09-12-6
POWER WINDOW SYSTEM INITIAL SETTING 09-12-11
POWER WINDOW SYSTEM WIRING DIAGRAM 09-03A-2
PRECAUTION (FRONT AND REAR AXLE) 03-10-1
PRECAUTION (SUSPENSION) 02-10-1
PRECAUTION [ABS/TCS] 04-03A-3
PRECAUTION [DSC] 04-03B-3
PRE-DELIVERY INSPECTION [GENERAL INFORMATION] 00-00-34
PRESSURE REGULATOR INSPECTION [L3 WITH TC] 01-14B-30
PRESSURE REGULATOR INSPECTION [L3, AJ] 01-14A-35
Pre-tensioner Seat Belt Inspection 08-10-5
PRIMARY CONTROL VALVE BODY INSTALLATION [FS5A-EL] 05-17A-47
PRIMARY CONTROL VALVE BODY REMOVAL [FS5A-EL] 05-17A-46
PROCEDURES FOR DETERMINING THE LOCATION OF A MALFUNCTION [L3 WITH TC] 09-02B-5
PROCEDURES FOR DETERMINING THE LOCATION OF A MALFUNCTION [L3, AJ] 09-02A-5
Procedures for Use [GENERAL INFORMATION] 00-00-7

AI

PROPELLER SHAFT
DISASSEMBLY/ASSEMBLY 03-15-7
PROPELLER SHAFT INSPECTION 03-15-12
PROPELLER SHAFT LOCATION INDEX 03-15-2
PROPELLER SHAFT
ON-VEHICLE INSPECTION 03-15-3
PROPELLER SHAFT
REMOVAL/INSTALLATION 03-15-4
PURGE SOLENOID VALVE INSPECTION
[L3 WITH TC] 01-16B-10
PURGE SOLENOID VALVE INSPECTION
[L3, AJ] 01-16A-13
PWM UNIT INSPECTION [L3, AJ] 07-40-15

Q

QUARTER WINDOW GLASS INSTALLATION
[SPORT WAGON] 09-12-23
QUARTER WINDOW GLASS REMOVAL
[SPORT WAGON] 09-12-23
QUICK DIAGNOSIS CHART [AW6A-EL] 05-03B-7
QUICK DIAGNOSIS CHART [FS5A-EL] 05-03A-7
QUICK DIAGNOSTIC CHART 09-03B-2
QUICK DIAGNOSTIC CHART
[INSTRUMENT CLUSTER] 09-03H-2
QUICK DIAGNOSTIC CHART
[L3 WITH TC] 01-03B-10
QUICK DIAGNOSTIC CHART [L3] 01-03A-11
QUICK RELEASE CONNECTOR
REMOVAL/INSTALLATION [L3 WITH TC] 01-14B-21

R

Rack Inspection 06-12-21
RADIATOR GRILLE
REMOVAL/INSTALLATION 09-16-3
RADIATOR REMOVAL/INSTALLATION
[L3 WITH TC] 01-12B-6
RADIATOR REMOVAL/INSTALLATION
[L3, AJ] 01-12A-8
RADIO [REFERENCE] 09-03C-36
Range of Topics
[GENERAL INFORMATION] 00-00-3
REAR ABS WHEEL-SPEED SENSOR
REMOVAL/INSTALLATION [ABS] 04-13-10
REAR ABS WHEEL-SPEED SENSOR
REMOVAL/INSTALLATION [DSC] 04-15-11
REAR ANTENNA FEEDER INSPECTION
[5-DOOR] 09-20-17
REAR ANTENNA FEEDER INSPECTION
[SPORT SEDAN] 09-20-17
REAR ANTENNA FEEDER INSPECTION
[SPORT WAGON] 09-20-18
REAR AXLE LOCATION INDEX 03-12-1
REAR BELTLINE MOLDING INSTALLATION 09-16-10
REAR BELTLINE MOLDING REMOVAL 09-16-10
REAR BRAKE (DISC) INSPECTION 04-11-26
REAR BRAKE (DISC)
REMOVAL/INSTALLATION 04-11-29
REAR BUCKLE
REMOVAL/INSTALLATION 08-11-6
REAR BUMPER DISASSEMBLY/ASSEMBLY
[L3 WITH TC] 09-10-15
REAR BUMPER REINFORCEMENT
REMOVAL/INSTALLATION 09-10-1
REAR BUMPER REMOVAL/INSTALLATION 09-10-
REAR CENTER SEAT BELT
REMOVAL/INSTALLATION 08-11-5
REAR COIL SPRING
REMOVAL/INSTALLATION 02-14-5
REAR COMBINATION LIGHT BULB
REMOVAL/INSTALLATION
[5-DOOR, SPORT WAGON] 09-18-15
REAR COMBINATION LIGHT
REMOVAL/INSTALLATION 09-18-14
REAR CROSSMEMBER
REMOVAL/INSTALLATION 02-14-18
REAR CROSSMEMBER
REMOVAL/INSTALLATION [AWD] 02-14-21
REAR DIFFERENTIAL ASSEMBLY 03-14-10
REAR DIFFERENTIAL DISASSEMBLY 03-14-6
REAR DIFFERENTIAL LOCATION INDEX 03-14-1
REAR DIFFERENTIAL
REMOVAL/INSTALLATION 03-14-5
REAR DOOR GLASS
REMOVAL/INSTALLATION 09-12-3
REAR DOOR LATCH AND LOCK ACTUATOR
REMOVAL/INSTALLATION 09-14-9
REAR DOOR LOCK ACTUATOR INSPECTION 09-14-9
REAR DOOR QUARTER GLASS
REMOVAL/INSTALLATION 09-12-4
REAR DOOR REMOVAL/INSTALLATION 09-11-2
REAR DOOR SPEAKER INSPECTION 09-20-1
REAR DOOR SPEAKER
REMOVAL/INSTALLATION 09-20-10
REAR DOOR TRIM
REMOVAL/INSTALLATION 09-17-13
REAR DOOR UNIT
REMOVAL/INSTALLATION 09-11-4
REAR DRAIN HOSE INSTALLATION 09-15-8
REAR DRAIN HOSE REMOVAL
[SPORT SEDAN, 5-DOOR] 09-15-6
REAR DRAIN HOSE REMOVAL
[SPORT WAGON] 09-15-7
REAR DRIVE SHAFT
DISASSEMBLY/ASSEMBLY 03-13-31
REAR DRIVE SHAFT PRE-INSPECTION 03-13-30
REAR DRIVE SHAFT
REMOVAL/INSTALLATION 03-13-30
REAR FINISHER REMOVAL/INSTALLATION 09-16-7
REAR HEAT DUCT REMOVAL/INSTALLATION
[L3 WITH TC] 07-11-14
REAR HEAT DUCT REMOVAL/INSTALLATION
[L3, AJ] 07-11-14
REAR LATERAL LINK
REMOVAL/INSTALLATION 02-14-10
REAR LOWER ARM
REMOVAL/INSTALLATION 02-14-6
REAR MAP LIGHT INSPECTION 09-18-29
REAR MAP LIGHT
REMOVAL/INSTALLATION 09-18-
REAR OIL SEAL REPLACEMENT [AJ] 01-10C-
REAR OIL SEAL REPLACEMENT
[L3 WITH TC] 01-10B-28
REAR OIL SEAL REPLACEMENT [L3] 01-10A-24

REAR OUTER HANDLE
REMOVAL/INSTALLATION. 09-14-11
REAR PACKAGE TRIM REMOVAL/INSTALLATION
'SPORT SEDAN] 09-17-16
\R SCUFF PLATE
REMOVAL/INSTALLATION. 09-17-12
REAR SEAT DISASSEMBLY/ASSEMBLY
[5-DOOR, SPORT WAGON]. 09-13-20
REAR SEAT DISASSEMBLY/ASSEMBLY
[SPORT SEDAN, MAZDASPEED6] 09-13-19
REAR SEAT REMOVAL/INSTALLATION
[5-DOOR, SPORT WAGON]. 09-13-17
REAR SEAT REMOVAL/INSTALLATION
[MAZDASPEED6]. 09-13-14
REAR SEAT REMOVAL/INSTALLATION
[SPORT SEDAN] 09-13-16
REAR SHOCK ABSORBER DISPOSAL. 02-14-4
REAR SHOCK ABSORBER INSPECTION 02-14-4
REAR SHOCK ABSORBER
REMOVAL/INSTALLATION. 02-14-4
REAR SIDE SEAT BELT
REMOVAL/INSTALLATION. 08-11-4
REAR SPOILER REMOVAL/INSTALLATION. 09-16-8
REAR STABILIZER CONTROL
LINK INSPECTION. 02-14-13
REAR STABILIZER
REMOVAL/INSTALLATION. 02-14-11
REAR STABILIZER
REMOVAL/INSTALLATION [AWD] 02-14-12
REAR SUSPENSION LOCATION INDEX 02-14-2
REAR TILT MOTOR INSPECTION
'EXCEPT L3 WITH TC] 09-13-26
\R TILT MOTOR INSPECTION
[L3 WITH TC] 09-13-26
REAR TILT MOTOR REMOVAL/INSTALLATION
[L3 WITH TC] 09-13-24
Rear Total Toe-in Adjustment. 02-11-4
REAR UPPER ARM REMOVAL/INSTALLATION. . . .02-14-8
REAR WASHER HOSE REMOVAL/INSTALLATION
[5-DOOR, SPORT WAGON]. 09-19-16
REAR WASHER MOTOR INSPECTION
[5-DOOR, SPORT WAGON]. 09-19-12
REAR WASHER MOTOR
REMOVAL/INSTALLATION
[5-DOOR, SPORT WAGON]. 09-19-12
REAR WASHER NOZZLE ADJUSTMENT
[5-DOOR, SPORT WAGON]. 09-19-16
REAR WASHER NOZZLE
REMOVAL/INSTALLATION
[5-DOOR, SPORT WAGON]. 09-19-15
REAR WHEEL ALIGNMENT 02-11-3
Rear Wheel Bearing Play Inspection 03-12-1
REAR WINDOW GLASS INSTALLATION 09-12-19
REAR WINDOW GLASS REMOVAL. 09-12-16
REAR WIPER AND WASHER SWITCH
INSPECTION [5-DOOR, SPORT WAGON] 09-19-10
REAR WIPER ARM AND BLADE ADJUSTMENT
[5-DOOR, SPORT WAGON]. 09-19-15
REAR WIPER ARM AND BLADE
'EMOVAL/INSTALLATION
,5-DOOR, SPORT WAGON]. 09-19-14
REAR WIPER MOTOR INSPECTION
[5-DOOR, SPORT WAGON]. 09-19-13
REAR WIPER MOTOR
REMOVAL/INSTALLATION
[5-DOOR, SPORT WAGON]. 09-19-13
REARVIEW MIRROR
REMOVAL/INSTALLATION. 09-12-29
RECLINER MOTOR INSPECTION
[EXCEPT L3 WITH TC]. 09-13-28
RECLINER MOTOR INSPECTION
[L3 WITH TC] 09-13-27
RECLINER MOTOR REMOVAL/INSTALLATION
[EXCEPT L3 WITH TC]. 09-13-27
RECLINER MOTOR REMOVAL/INSTALLATION
[L3 WITH TC] 09-13-27
REFERENCE INFORMATION 09-03D-11
REFRIGERANT CHARGING [L3 WITH TC] 07-10-8
REFRIGERANT CHARGING [L3, AJ] 07-10-5
REFRIGERANT LINES REMOVAL/INSTALLATION
[L3 WITH TC] 07-11-20
REFRIGERANT LINES REMOVAL/INSTALLATION
[L3, AJ] 07-11-19
REFRIGERANT PRESSURE CHECK
[L3 WITH TC] 07-10-5
REFRIGERANT PRESSURE CHECK
[L3, AJ] 07-10-4
REFRIGERANT PRESSURE SWITCH INSPECTION
[L3 WITH TC] 07-40-29
REFRIGERANT PRESSURE SWITCH INSPECTION
[L3, AJ] 07-40-28
REFRIGERANT PRESSURE SWITCH
REMOVAL/INSTALLATION [L3 WITH TC] 07-40-28
REFRIGERANT PRESSURE SWITCH
REMOVAL/INSTALLATION [L3, AJ] 07-40-27
REFRIGERANT RECOVERY. 07-10-5
REFRIGERANT SYSTEM
GENERAL PROCEDURES. 07-10-3
REFRIGERANT SYSTEM PERFORMANCE TEST
[L3 WITH TC] 07-10-4
REFRIGERANT SYSTEM PERFORMANCE TEST
[L3, AJ] 07-10-3
REFRIGERANT SYSTEM SERVICE CAUTIONS
[L3 WITH TC] 07-10-2
REFRIGERANT SYSTEM SERVICE CAUTIONS
[L3, AJ] 07-10-2
REFRIGERANT SYSTEM SERVICE WARNINGS. . 07-10-1
RELAY INSPECTION. 09-21-7
RELAY LOCATION. 09-21-6
REMOTE HANDLE LEVER
REMOVAL/INSTALLATION
[5-DOOR, SPORT WAGON]. 09-13-21
REMOTE HANDLE LEVER
REMOVAL/INSTALLATION
[SPORT SEDAN]. 09-13-21
REQUEST SWITCH INSPECTION 09-14-21
REQUEST SWITCH
REMOVAL/INSTALLATION. 09-14-21
RESISTOR INSPECTION [HVAC] 07-40-15
RESISTOR REMOVAL/INSTALLATION
[HVAC] 07-40-14
RESTRAINTS SERVICE TOOLS. 08-60-1
REVERSE SWITCH INSPECTION [A65M-R] 05-15B-3
REVERSE SWITCH REMOVAL/INSTALLATION
[A65M-R]. 05-15B-4
ROAD TEST [AW6A-EL] 05-17B-7
ROAD TEST [FS5A-EL] 05-17A-7

AI

ROOF ANTENNA (CENTER) INSPECTION 09-20-14
ROOF ANTENNA (CENTER) REMOVAL/INSTALLATION 09-20-14
ROOF CARRIER BRACKET REMOVAL/INSTALLATION [SPORT WAGON] 09-16-8
ROOF MOLDING INSTALLATION 09-16-11
ROOF MOLDING REMOVAL 09-16-11
Rounding Off [GENERAL INFORMATION] 00-00-12

S

SAE STANDARDS [GENERAL INFORMATION] 00-00-32
Safety Stand Positions [GENERAL INFORMATION] 00-00-28
SAS CONTROL MODULE REMOVAL/INSTALLATION 08-10-12
SCHEDULED MAINTENANCE [GENERAL INFORMATION] 00-00-36
SCUFF PLATE (FRONT) REMOVAL/INSTALLATION 09-17-11
SCUFF PLATE (REAR) REMOVAL/INSTALLATION 09-17-12
SEAT (FRONT) DISASSEMBLY/ASSEMBLY [EXCEPT L3 WITH TC] 09-13-9
SEAT (FRONT) DISASSEMBLY/ASSEMBLY [L3 WITH TC] 09-13-6
SEAT (FRONT) REMOVAL/INSTALLATION [EXCEPT L3 WITH TC] 09-13-5
SEAT (FRONT) REMOVAL/INSTALLATION [L3 WITH TC] 09-13-4
SEAT (REAR) DISASSEMBLY/ASSEMBLY [5-DOOR, SPORT WAGON] 09-13-20
SEAT (REAR) DISASSEMBLY/ASSEMBLY [SPORT SEDAN, MAZDASPEED6] 09-13-19
SEAT (REAR) REMOVAL/INSTALLATION [5-DOOR, SPORT WAGON] 09-13-17
SEAT (REAR) REMOVAL/INSTALLATION [MAZDASPEED6] 09-13-14
SEAT (REAR) REMOVAL/INSTALLATION [SPORT SEDAN] 09-13-16
SEAT BELT (FRONT) REMOVAL/INSTALLATION 08-11-3
SEAT BELT (REAR) (CENTER) REMOVAL/INSTALLATION 08-11-5
SEAT BELT INSPECTION 08-11-7
SEAT BELT LOCATION INDEX 08-11-2
SEAT TRACK POSITION SENSOR REMOVAL/INSTALLATION [EXCEPT L3 WITH TC] 08-10-13
SEAT WARMER SWITCH INSPECTION 09-13-29
SEAT WARMER SWITCH REMOVAL/INSTALLATION 09-13-29
SEAT WARMER UNIT INSPECTION [EXCEPT L3 WITH TC] 09-13-31
SEAT WARMER UNIT INSPECTION [L3 WITH TC] 09-13-30
SEAT WEIGHT SENSOR CALIBRATION 08-10-14
SEAT WEIGHT SENSOR CONTROL MODULE REMOVAL/INSTALLATION [EXCEPT L3 WITH TC] 08-10-13
SEAT WEIGHT SENSOR CONTROL MODULE REMOVAL/INSTALLATION [L3 WITH TC] 08-10-14
SEAT WEIGHT SENSOR INSPECTION 08-10-1
SECONDARY CONTROL VALVE BODY INSTALLATION [FS5A-EL] 05-17A-49
SECONDARY CONTROL VALVE BODY REMOVAL [FS5A-EL] 05-17A-48
SECURITY ACCESS PROCEDURE 09-14-39
SELECTOR CABLE ADJUSTMENT 05-18-7
SELECTOR LEVER COMPONENT INSPECTION 05-18-6
SELECTOR LEVER COMPONENT REMOVAL/INSTALLATION 05-18-7
SELECTOR LEVER DISASSEMBLY/ASSEMBLY 05-18-16
SELECTOR LEVER INSPECTION 05-18-6
SERVICE CAUTIONS [AIR BAG SYSTEM] 08-10-5
SERVICE CAUTIONS [GENERAL INFORMATION] 00-00-13
Service Procedure [GENERAL INFORMATION] 00-00-3
SERVICE TOOLS [GENERAL INFORMATION] 00-00-18
SERVICE WARNINGS [AIR BAG SYSTEM] 08-10-3
SHIFT MECHANISM REMOVAL/INSTALLATION [A26MX-R] 05-16-6
SHIFT MECHANISM REMOVAL/INSTALLATION [G35M-R, A65M-R] 05-16-3
SHIFT-LOCK INSPECTION 05-18-1
SHOCK ABSORBER (FRONT) DISPOSAL 02-13-7
SHOCK ABSORBER (FRONT) INSPECTION 02-13-
SHOCK ABSORBER (REAR) DISPOSAL 02-14
SHOCK ABSORBER (REAR) INSPECTION 02-14-4
SHOCK ABSORBER (REAR) REMOVAL/INSTALLATION 02-14-4
SHOCK ABSORBER AND SPRING (FRONT) DISASSEMBLY/ASSEMBLY 02-13-5
SHOCK ABSORBER AND SPRING (FRONT) REMOVAL/INSTALLATION 02-13-3
SHOCK ABSORBING PAD REMOVAL/INSTALLATION 09-17-26
SHROUD PANEL REMOVAL/INSTALLATION 09-10-17
SIDE AIR BAG MODULE REMOVAL/INSTALLATION 08-10-8
SIDE AIR BAG MODULE REMOVAL/INSTALLATION [L3 WITH TC] 08-10-9
SIDE AIR BAG SENSOR REMOVAL/INSTALLATION 08-10-12
SIDE MARKER LIGHT (FRONT) REMOVAL/INSTALLATION 09-18-13
SIDE PANEL REMOVAL/INSTALLATION 09-17-6
SIDE PROTECTOR INSTALLATION 09-16-6
SIDE PROTECTOR REMOVAL 09-16-5
SIDE SEAT BELT (REAR) REMOVAL/INSTALLATION 08-11-4
SIDE STEP MOLDING REMOVAL/INSTALLATION 09-16-5
SIDE TRIM (FRONT) REMOVAL/INSTALLATION 09-17-
SLIDE MOTOR INSPECTION [EXCEPT L3 WITH TC] 09-13-26
SLIDE MOTOR INSPECTION [L3 WITH TC] 09-13-26

SOLAR RADIATION SENSOR INSPECTION 07-40-21
SOLAR RADIATION SENSOR REMOVAL/INSTALLATION. 07-40-21
SOLENOID VALVE INSPECTION (PRIMARY CONTROL VALVE BODY) [FS5A-EL] 05-17A-28
SOLENOID VALVE INSPECTION (SECONDARY CONTROL VALVE BODY) [FS5A-EL] 05-17A-31
SOLENOID VALVE INSPECTION [AW6A-EL] 05-17B-20
SOLENOID VALVE REMOVAL/INSTALLATION (PRIMARY CONTROL VALVE BODY) [FS5A-EL]. 05-17A-30
SOLENOID VALVE REMOVAL/INSTALLATION (SECONDARY CONTROL VALVE BODY) [FS5A-EL]. 05-17A-32
SPARK PLUG INSPECTION [L3 WITH TC] 01-18B-3
SPARK PLUG INSPECTION [L3, AJ] 01-18A-5
SPARK PLUG REMOVAL/INSTALLATION [L3 WITH TC] 01-18B-3
SPARK PLUG REMOVAL/INSTALLATION [L3, AJ] 01-18A-4
Speaker Inspection 09-02D-6
SPOILER (REAR) REMOVAL/INSTALLATION. 09-16-8
STABILIZER (FRONT) REMOVAL/INSTALLATION. 02-13-18
STABILIZER (REAR) REMOVAL/INSTALLATION. 02-14-11
STABILIZER (REAR) REMOVAL/INSTALLATION [AWD] 02-14-12
Stall Test [AW6A-EL] 05-17B-6
Stall Test [FS5A-EL]. 05-17A-6
STARTER DISASSEMBLY/ASSEMBLY [L3 WITH TC] 01-19B-7
STARTER DISASSEMBLY/ASSEMBLY [L3, AJ] 01-19A-8
STARTER INSPECTION [L3 WITH TC]. 01-19B-3
STARTER INSPECTION [L3, AJ]. 01-19A-4
STARTER INTERLOCK SWITCH INSPECTION (MTX) 01-19A-9
STARTER INTERLOCK SWITCH INSPECTION [L3 WITH TC] 01-19B-7
STARTER REMOVAL/INSTALLATION [L3 WITH TC] 01-19B-2
STARTER REMOVAL/INSTALLATION [L3, AJ] . . . 01-19A-2
STARTING PROCEDURE FOR ON-BOARD DIAGNOSTIC TEST MODE 09-02D-1
STARTING SYSTEM LOCATION INDEX [L3 WITH TC] 01-19B-1
STAY DAMPER DISPOSAL [LIFTGATE] 09-11-8
STAY DAMPER DISPOSAL [TRUNK LID] 09-10-9
STEERING ANGLE SENSOR INSPECTION 09-18-20
STEERING GEAR AND LINKAGE ASSEMBLY 06-12-22
STEERING GEAR AND LINKAGE DISASSEMBLY 06-12-17
STEERING GEAR AND LINKAGE INSPECTION. 06-12-21
STEERING GEAR AND LINKAGE REMOVAL/INSTALLATION [AJ] 06-12-13
STEERING GEAR AND LINKAGE REMOVAL/INSTALLATION [L3 WITH TC] 06-12-15
STEERING GEAR AND LINKAGE REMOVAL/INSTALLATION [L3] 06-12-11
STEERING LOCATION INDEX [L3 WITH TC] 06-12-3
STEERING LOCATION INDEX [L3, AJ]. 06-12-2
STEERING LOCK UNIT ID CODE REGISTRATION [WITH ADVANCED KEYLESS SYSTEM]. 09-14-17
STEERING LOCK UNIT INSPECTION 09-21-5
STEERING SERVICE TOOLS 06-60-1
STEERING SHAFT INSPECTION 06-12-10
STEERING TECHNICAL DATA 06-50-1
STEERING WHEEL AND COLUMN INSPECTION 06-12-6
STEERING WHEEL AND COLUMN REMOVAL/INSTALLATION 06-12-7
Steering Wheel Effort Inspection 06-12-7
Steering Wheel Looseness Inspection. 06-12-6
Steering Wheel Play Inspection 06-12-6
SUNROOF LOCATION INDEX. 09-15-2
SUNROOF MOTOR INSPECTION 09-15-12
SUNROOF MOTOR INSTALLATION 09-15-11
SUNROOF MOTOR REMOVAL 09-15-11
SUNROOF RELAY INSPECTION 09-15-13
SUNROOF SWITCH INSPECTION 09-15-14
SUNROOF SWITCH REMOVAL/INSTALLATION 09-15-14
SUNROOF UNIT DISASSEMBLY/ASSEMBLY 09-15-9
SUNROOF UNIT REMOVAL/INSTALLATION 09-15-8
SUNVISOR REMOVAL/INSTALLATION. 09-17-25
SUPPLIER IDENTIFICATION PROCEDURE [AUDIO]. 09-02D-2
SUSPENSION (FRONT) LOCATION INDEX 02-13-2
SUSPENSION (REAR) LOCATION INDEX 02-14-2
Suspension Arm Removal/Installation [DRIVELINE/AXLE]. 03-10-1
Suspension Arm Removal/Installation [STEERING] 06-10-1
Suspension Links Removal/Installation 02-10-1
SUSPENSION SERVICE TOOLS 02-60-1
SUSPENSION TECHNICAL DATA. 02-50-1
Symbols [GENERAL INFORMATION] 00-00-5
SYMPTOM DIAGNOSTIC INDEX [AJ]. 01-03C-8
SYMPTOM QUICK DIAGNOSIS CHART [AJ] 01-03C-10
SYMPTOM TROUBLESHOOTING 03-03-2
SYMPTOM TROUBLESHOOTING [ABS/TCS]. 04-03A-6
SYMPTOM TROUBLESHOOTING [DSC] 04-03B-6
SYMPTOM TROUBLESHOOTING [INSTRUMENT CLUSTER]. 09-03H-1
SYMPTOM TROUBLESHOOTING CHART [ADVANCED KEYLESS SYSTEM] 09-03F-3
SYMPTOM TROUBLESHOOTING CHART [KEYLESS ENTRY SYSTEM]. 09-03A-8
SYMPTOM TROUBLESHOOTING CHART [KEYLESS ENTRY SYSTEM]. 09-03G-2
SYMPTOM TROUBLESHOOTING INDEX 09-03B-1
SYMPTOM TROUBLESHOOTING ITEM TABLE [AW6A-EL] 05-03B-4
SYMPTOM TROUBLESHOOTING ITEM TABLE [FS5A-EL]. 05-03A-5
SYMPTOM TROUBLESHOOTING WIRING DIAGRAM [AJ] 01-03C-2

AI

SYMPTOM TROUBLESHOOTING
WIRING DIAGRAM [L3] 01-03A-2

T

TCM 09-02A-6
TCM INSPECTION [AW6A-EL] 05-17B-21
TCM INSPECTION [FS5A-EL] 05-17A-33
TCM REMOVAL/INSTALLATION
[AW6A-EL] 05-17B-25
TCM REMOVAL/INSTALLATION
[FS5A-EL] 05-17A-38
TCS OFF SWITCH INSPECTION 04-14-2
TCS OFF SWITCH
REMOVAL/INSTALLATION 04-14-2
TECHNICAL DATA 05-50-1
THEFT-DETERRENT SYSTEM
LOCATION INDEX 09-14-5
THERMOSTAT INSPECTION
[L3 WITH TC] 01-12B-7
THERMOSTAT INSPECTION [L3, AJ] 01-12A-10
THERMOSTAT REMOVAL/INSTALLATION
[L3 WITH TC] 01-12B-7
THERMOSTAT REMOVAL/INSTALLATION
[L3, AJ] 01-12A-9
THROTTLE ACTUATOR INSPECTION [AJ] 01-13C-6
THROTTLE ACTUATOR INSPECTION
[L3 WITH TC] 01-13B-12
THROTTLE ACTUATOR INSPECTION [L3] 01-13A-7
THROTTLE POSITION (TP)
SENSOR INSPECTION [AJ] 01-40C-28
THROTTLE POSITION (TP)
SENSOR INSPECTION [L3 WITH TC] 01-40B-27
THROTTLE POSITION (TP)
SENSOR INSPECTION [L3] 01-40A-30
Tie rod Inspection 06-12-21
TIEDOWN HOOK
[GENERAL INFORMATION] 00-00-29
Tiedown Hook [Mazda6]
[GENERAL INFORMATION] 00-00-29
Tiedown Hook [MAZDASPEED6]
[GENERAL INFORMATION] 00-00-29
Tie-rod End Inspection 06-12-21
TILT MOTOR (FRONT) INSPECTION
[EXCEPT L3 WITH TC] 09-13-24
TILT MOTOR (FRONT) INSPECTION
[L3 WITH TC] 09-13-23
TILT MOTOR (FRONT)
REMOVAL/INSTALLATION [L3 WITH TC] 09-13-22
TILT MOTOR (REAR) REMOVAL/INSTALLATION
[L3 WITH TC] 09-13-24
TILT MOTOR (REAR/REAR) INSPECTION
[EXCEPT L3 WITH TC] 09-13-26
Time Lag Test [AW6A-EL] 05-17B-7
Time Lag Test [FS5A-EL] 05-17A-7
TIMING CHAIN
REMOVAL/INSTALLATION [AJ] 01-10C-6
TIMING CHAIN REMOVAL/INSTALLATION
[L3 WITH TC] 01-10B-11
TIMING CHAIN
REMOVAL/INSTALLATION [L3] 01-10A-9
TIRE HOUSE TRIM
REMOVAL/INSTALLATION 09-17-15
TONNEAU COVER ANCHOR
REMOVAL/INSTALLATION
[SPORT WAGON] 09-17-27
TORQUE CONVERTER
REMOVAL/INSTALLATION [AW6A-EL] 05-17B-
TOWING [GENERAL INFORMATION] 00-00-28
TRACTION CONTROL
SYSTEM LOCATION INDEX 04-14-1
TRAILING LINK
REMOVAL/INSTALLATION 02-14-14
TRAILING LINK
REMOVAL/INSTALLATION [AWD] 02-14-16
TRANSAXLE FLUID TEMPERATURE (TFT)
SENSOR INSPECTION [AW6A-EL] 05-17B-13
TRANSAXLE FLUID TEMPERATURE (TFT)
SENSOR INSPECTION [FS5A-EL] 05-17A-18
TRANSAXLE FLUID TEMPERATURE (TFT)
SENSOR REMOVAL/INSTALLATION
[AW6A-EL] 05-17B-15
TRANSAXLE FLUID TEMPERATURE (TFT)
SENSOR REMOVAL/INSTALLATION
[FS5A-EL] 05-17A-20
TRANSAXLE OIL INSPECTION
[A26MX-R] 05-15C-2
TRANSAXLE OIL INSPECTION
[A65M-R] 05-15B-2
TRANSAXLE OIL INSPECTION [G35M-R] 05-15A-2
TRANSAXLE OIL REPLACEMENT
[A26MX-R] 05-15C-2
TRANSAXLE OIL REPLACEMENT
[A65M-R] 05-15B-2
TRANSAXLE OIL REPLACEMENT
[G35M-R] 05-15A
TRANSAXLE RANGE (TR)
SWITCH ADJUSTMENT [FS5A-EL] 05-17A-17
TRANSAXLE RANGE (TR)
SWITCH INSPECTION [AW6A-EL] 05-17B-13
TRANSAXLE RANGE (TR)
SWITCH INSPECTION [FS5A-EL] 05-17A-12
TRANSAXLE RANGE (TR) SWITCH
REMOVAL/INSTALLATION [FS5A-EL] 05-17A-14
TRANSFER LOCATION INDEX 03-16-1
TRANSFER OIL COOLER
REMOVAL/INSTALLATION 03-16-3
TRANSFER OIL INSPECTION 03-16-2
TRANSFER OIL REPLACEMENT 03-16-2
TRANSFER OIL SEAL REPLACEMENT 03-16-2
TRANSFER REMOVAL/INSTALLATION 03-16-3
TRANSMISSION/TRANSAXLE
SERVICE TOOLS 05-60-1
TRANSMITTER BATTERY REPLACEMENT
[KEYLESS ENTRY SYSTEM] 09-14-23
TRANSVERSE MEMBER
REMOVAL/INSTALLATION 02-13-23
TROUBLESHOOTING INDEX [L3 WITH TC] 07-03-5
TROUBLESHOOTING INDEX [L3, AJ] 07-03-5
Troubleshooting Procedure
[GENERAL INFORMATION] 00-00-6
TRUNK COMPARTMENT LIGHT BULB
REMOVAL/INSTALLATION [SPORT SEDAN] 09-18-
TRUNK COMPARTMENT LIGHT
SWITCH INSPECTION [SPORT SEDAN] 09-18-34
TRUNK END TRIM
REMOVAL/INSTALLATION 09-17-19

TRUNK KEY CYLINDER
REMOVAL/INSTALLATION [SPORT SEDAN] . . .09-14-27
TRUNK KEY CYLINDER SWITCH INSPECTION
'SPORT SEDAN] 09-14-27
JNK LID ADJUSTMENT. 09-10-9
TRUNK LID OPEN CANCEL
SWITCH INSPECTION 09-14-26
TRUNK LID OPEN CANCEL SWITCH
REMOVAL/INSTALLATION. 09-14-26
TRUNK LID OPENER INSPECTION
[SPORT SEDAN] 09-14-25
TRUNK LID OPENER REMOVAL/INSTALLATION
[SPORT SEDAN] 09-14-24
TRUNK LID OPENER SWITCH
REMOVAL/INSTALLATION
[SPORT SEDAN] 09-14-26
TRUNK LID REMOVAL/INSTALLATION 09-10-8
TRUNK LID TRIM REMOVAL/INSTALLATION
[SPORT SEDAN] 09-17-20
TRUNK SIDE TRIM
REMOVAL/INSTALLATION. 09-17-17
TRUNK SIDE UPPER TRIM
REMOVAL/INSTALLATION
[5-DOOR, SPORT WAGON]. 09-17-18
TURBOCHARGER INSPECTION
[L3 WITH TC] 01-13B-16
TURN LIGHT (FRONT)
REMOVAL/INSTALLATION. 09-18-12
TWEETER INSPECTION 09-20-11
TWEETER REMOVAL/INSTALLATION 09-20-10
TWO-STEP DOWN FUNCTION
)PERATIVE/NON-OPERATIVE SWITCHING
ROCEDURE. 09-12-11

U

UNITS [GENERAL INFORMATION] 00-00-12
Upper and Lower Limits
[GENERAL INFORMATION]. 00-00-12
UPPER ARM (FRONT) INSPECTION. 02-13-9
UPPER ARM (FRONT)
REMOVAL/INSTALLATION. 02-13-8
UPPER ARM (REAR)
REMOVAL/INSTALLATION. 02-14-8

V

VACUUM HOSE CHECK VALVE INSPECTION
(POWER BRAKE UNIT). 04-11-5
VACUUM HOSE ROUTING DIAGRAM [AJ] 01-13C-2
VACUUM HOSE ROUTING DIAGRAM
[L3 WITH TC] 01-13B-4
VACUUM HOSE ROUTING DIAGRAM [L3] 01-13A-3
VALVE CLEARANCE ADJUSTMENT 01-10B-5
VALVE CLEARANCE ADJUSTMENT [L3]. 01-10A-6
VALVE CLEARANCE INSPECTION 01-10B-4
.VE CLEARANCE INSPECTION [L3]. 01-10A-5
.VE CLEARANCE INSPECTION/ADJUSTMENT
[L3 WITH TC] 01-10B-4
VANITY MIRROR ILLUMINATION BULB
REMOVAL/INSTALLATION. 09-18-32
VANITY MIRROR ILLUMINATION
INSPECTION 09-18-32
VARIABLE AIR DUCT (VAD) CHECK VALVE
(ONE-WAY) INSPECTION [AJ]. 01-13C-6
VARIABLE AIR DUCT (VAD) CHECK VALVE
(ONE-WAY) INSPECTION [L3]. 01-13A-6
VARIABLE AIR DUCT (VAD) CONTROL
SOLENOID VALVE INSPECTION [AJ] 01-13C-5
VARIABLE AIR DUCT (VAD) CONTROL
SOLENOID VALVE INSPECTION [L3] 01-13A-6
VARIABLE AIR DUCT (VAD) SHUTTER
VALVE INSPECTION [AJ]. 01-13C-4
VARIABLE AIR DUCT (VAD) SHUTTER
VALVE INSPECTION [L3]. 01-13A-5
VARIABLE INTAKE AIR SHUTTER VALVE
ACTUATOR INSPECTION [L3]. 01-13A-8
VARIABLE INTAKE AIR SOLENOID VALVE
INSPECTION [L3]. 01-13A-8
VARIABLE SWIRL SHUTTER VALVE ACTUATOR
INSPECTION [L3 WITH TC]. 01-13B-13
VARIABLE SWIRL SHUTTER VALVE SWITCH
INSPECTION [L3 WITH TC]. 01-40B-25
VARIABLE SWIRL SOLENOID VALVE
INSPECTION [L3 WITH TC]. 01-13B-13
VARIABLE TUMBLE SHUTTER VALVE
ACTUATOR INSPECTION [L3]. 01-13A-9
VARIABLE TUMBLE SHUTTER VALVE SWITCH
INSPECTION [L3]. 01-40A-28
VARIABLE TUMBLE SOLENOID
VALVE INSPECTION [L3]. 01-13A-9
VARIABLE VALVE TIMING ACTUATOR
INSPECTION [AJ]. 01-10C-40
VARIABLE VALVE TIMING ACTUATOR
INSPECTION [L3 WITH TC]. 01-10B-38
VARIABLE VALVE TIMING ACTUATOR
INSPECTION [L3]. 01-10A-30
VARIABLE VALVE TIMING ACTUATOR
REMOVAL/INSTALLATION [AJ] 01-10C-40
VARIABLE VALVE TIMING ACTUATOR
REMOVAL/INSTALLATION
[L3 WITH TC] 01-10B-37
VARIABLE VALVE TIMING ACTUATOR
REMOVAL/INSTALLATION [L3] 01-10A-31
Vehicle Identification Number (VIN)
[GENERAL INFORMATION]. 00-00-31
VEHICLE IDENTIFICATION NUMBER (VIN)
[GENERAL INFORMATION]. 00-00-3
VEHICLE IDENTIFICATION NUMBER (VIN) CODE
[GENERAL INFORMATION]. 00-00-2
Vehicle Identification Number (VIN) Code [Mazda6]
[GENERAL INFORMATION]. 00-00-2
Vehicle Identification Number (VIN) Code
[MAZDASPEED6]
[GENERAL INFORMATION]. 00-00-2
Vehicle Lift Positions
[GENERAL INFORMATION]. 00-00-27
VEHICLE SPEED SENSOR (VSS) INSPECTION
[AW6A-EL] 05-17B-19
VEHICLE SPEED SENSOR (VSS) INSPECTION
[FS5A-EL] 05-17A-25
VEHICLE SPEED SENSOR (VSS)
REMOVAL/INSTALLATION [FS5A-EL] 05-17A-27
VEHICLE SPEED SENSOR INSPECTION
(WITHOUT ABS) [A65M-R]. 05-15B-5

AI

VEHICLE SPEED SENSOR INSPECTION (WITHOUT ABS) [G35M-R] 05-15A-4
VEHICLE SPEED SENSOR REMOVAL/INSTALLATION (WITHOUT ABS) [A65M-R] 05-15B-4
VEHICLE SPEED SENSOR REMOVAL/INSTALLATION (WITHOUT ABS) [G35M-R] 05-15A-3

W

WARM-UP THREE-WAY CATALYTIC CONVERTER (WU-TWC) INSPECTION [L3 WITH TC] 01-16B-13
WARM-UP THREE-WAY CATALYTIC CONVERTER(WU-TWC) INSPECTION [L3, AJ] 01-16A-23
WASHER FLUID-LEVEL SENSOR INSPECTION 09-19-9
WASHER FLUID-LEVEL SENSOR REMOVAL/INSTALLATION 09-19-8
WASHER FLUID-LEVEL SENSOR REMOVAL/INSTALLATION [L3 WITH TC] 09-19-9
WASHER HOSE (REAR) REMOVAL/INSTALLATION [5-DOOR, SPORT WAGON] 09-19-16
WASHER MOTOR (REAR) INSPECTION [5-DOOR, SPORT WAGON] 09-19-12
WASHER MOTOR (REAR) REMOVAL/INSTALLATION [5-DOOR, SPORT WAGON] 09-19-12
WASHER NOZZLE (REAR) ADJUSTMENT [5-DOOR, SPORT WAGON] 09-19-16
WASHER NOZZLE (REAR) REMOVAL/INSTALLATION [5-DOOR, SPORT WAGON] 09-19-15
WASHER TANK REMOVAL/INSTALLATION [5-DOOR, SPORT WAGON] 09-19-6
WASHER TANK REMOVAL/INSTALLATION [L3 WITH TC] 09-19-7
WASHER TANK REMOVAL/INSTALLATION [SPORT SEDAN] 09-19-6
WASTEGATE ACTUATOR INSPECTION [L3 WITH TC] 01-13B-15
WASTEGATE CONTROL SOLENOID VALVE INSPECTION [L3 WITH TC] 01-13B-14
WATER PUMP REMOVAL/INSTALLATION [L3 WITH TC] 01-12B-8
WATER PUMP REMOVAL/INSTALLATION [L3, AJ] 01-12A-10
WATER TEMPERATURE SENSOR INSPECTION [L3, AJ] 07-40-26
WATER TEMPERATURE SENSOR REMOVAL/INSTALLATION [L3, AJ] 07-40-25
WHEEL ALIGNMENT (FRONT) 02-11-2
WHEEL ALIGNMENT (REAR) 02-11-3
WHEEL ALIGNMENT PRE-INSPECTION 02-11-1
Wheel and Tire Removal/Installation 03-10-1
WHEEL AND TIRE SPECIFICATION 02-12-1
WHEEL BALANCE ADJUSTMENT (ALUMINUM ALLOY WHEEL) 02-12-2
WHEEL HUB BOLT REPLACEMENT 03-11-2
WHEEL HUB BOLT REPLACEMENT [AWD] 03-12-2
WHEEL HUB, HUB SPINDLE PRE-INSPECTION 03-12
WHEEL HUB, HUB SPINDLE REMOVAL/INSTALLATION 03-12-2
WHEEL HUB, KNUCKLE REMOVAL/INSTALLATION [AWD] 03-12-5
WHEEL HUB, STEERING KNUCKLE PRE-INSPECTION 03-11-1
WHEEL HUB, STEERING KNUCKLE REMOVAL/INSTALLATION 03-11-3
Wheels and Tires Removal/Installation 02-10-1
WINDOW GLASS (REAR) INSTALLATION 09-12-19
WINDOW GLASS (REAR) REMOVAL 09-12-16
WINDSHIELD INSTALLATION 09-12-14
WINDSHIELD REMOVAL 09-12-13
WINDSHIELD WASHER HOSE REMOVAL/INSTALLATION 09-19-11
WINDSHIELD WASHER HOSE REMOVAL/INSTALLATION [L3 WITH TC] 09-19-12
WINDSHIELD WASHER MOTOR INSPECTION 09-19-8
WINDSHIELD WASHER MOTOR INSPECTION [L3 WITH TC] 09-19-8
WINDSHIELD WASHER MOTOR REMOVAL/INSTALLATION 09-19-7
WINDSHIELD WASHER MOTOR REMOVAL/INSTALLATION [L3 WITH TC] 09-19-7
WINDSHIELD WASHER NOZZLE REMOVAL/INSTALLATION 09-19-
WINDSHIELD WASHER NOZZLE REMOVAL/INSTALLATION [L3 WITH TC] 09-19-11
WINDSHIELD WIPER ARM AND BLADE ADJUSTMENT 09-19-4
WINDSHIELD WIPER ARM AND BLADE REMOVAL/INSTALLATION 09-19-4
WINDSHIELD WIPER MOTOR DISASSEMBLY/ASSEMBLY 09-19-5
WINDSHIELD WIPER MOTOR INSPECTION 09-19-5
WINDSHIELD WIPER MOTOR REMOVAL/INSTALLATION 09-19-5
WIPER AND WASHER SWITCH (REAR) INSPECTION [5-DOOR, SPORT WAGON] 09-19-10
WIPER AND WASHER SWITCH INSPECTION 09-19-10
WIPER AND WASHER SWITCH REMOVAL/INSTALLATION 09-19-9
WIPER AND WASHER SYSTEM LOCATION INDEX 09-19-2
WIPER AND WASHER SYSTEM LOCATION INDEX [L3 WITH TC] 09-19-3
WIPER ARM AND BLADE (REAR) ADJUSTMENT [5-DOOR, SPORT WAGON] 09-19-15
WIPER ARM AND BLADE (REAR) REMOVAL/INSTALLATION [5-DOOR, SPORT WAGON] 09-19-
WIPER MOTOR (REAR) INSPECTION [5-DOOR, SPORT WAGON] 09-19-13

WIPER MOTOR (REAR)
REMOVAL/INSTALLATION
[5-DOOR, SPORT WAGON] 09-19-13
)OFER INSPECTION
5-DOOR, SPORT WAGON] 09-20-12
WOOFER INSPECTION [SPORT SEDAN] 09-20-12
WOOFER REMOVAL/INSTALLATION
[5-DOOR, SPORT WAGON]..... 09-20-11
WOOFER REMOVAL/INSTALLATION
[SPORT SEDAN] 09-20-11

AI